E1727 14 SEP 1987 018 ~~027~~

T.O. 36-1-3

D8174

TECHNICAL MANUAL

PAINTING, MARKING, AND LIGHTING REQUIREMENTS FOR USAF VEHICLES

F09603-84-C-0322

BASIC AND ALL CHANGES HAVE BEEN MERGED TO MAKE THIS A COMPLETE PUBLICATION

This publication is required for official use or for administrative or operational purposes only. Distribution is limited to U S Government agencies. Other requests for this document must be referred to Warner Robins ALC/MMEDT, Robins AFB, GA, 31098-5609.

Published under authority of the Secretary of the Air Force.

AFLC RAFB, GA

2 AUGUST 1971

CHANGE 36 – 7 MAY 1987

LIST OF EFFECTIVE PAGES

INSERT LATEST CHANGED PAGES. DESTROY SUPERSEDED PAGES.

NOTE: The portion of the text affected by the changes is indicated by a vertical line in the outer margins of the page. Changes to illustrations are indicated by miniature pointing hands. Changes to wiring diagrams are indicated by shaded areas.

Dates of issue for original and changed pages are:

Original	0	2 Aug 71
Change	1	7 Apr 72
Change	2	16 Aug 73
Change	3	15 Oct 73
Change	4	19 Nov 73
Change	5	19 Jul 74
Change	6	27 Nov 74
Change	7	9 May 75
Change	8	9 Sep 75
Change	9	5 Nov 75
Change	10	7 Jul 76
Change	11	10 Sep 76
Change	12	6 Dec 76
Change	13	3 Mar 77
Change	14	25 May 77
Change	15	4 Aug 77
Change	16	2 Dec 77
Change	17	22 May 78
Change	18	3 Oct 78
Change	19	30 Jan 79
Change	20	1 May 79
Change	21	20 Sep 79
Change	22	1 May 80
Change	23	14 May 81
Change	24	9 Nov 81
Change	25	29 Apr 82
Change	26	26 Aug 82
Change	27	28 Oct 82
Change	28	25 Aug 83
Change	29	26 Jan 84
Change	30	5 Apr 84
Change	31	7 Jun 84
Change	32	30 Aug 84
Change	33	7 Feb 85
Change	34	13 Jun 85
Change	35	19 Feb 87
Change	36	7 May 87

TOTAL NUMBER OF PAGES IN THIS PUBLICATION IS 192 CONSISTING OF THE FOLLOWING:

Page No.	*Change No.
Title	36
A	36
i — iii	23
iv	28
1-1	23
1-2 Blank	0
2-1	24
2-2	34
2-2A	25
2-2B — 2-2E	24
2-2F Blank	24
2-3	14
2-4	17
2-4A	17
2-4B Blank	17
2-5	21
2-6	17
2-7 — 2-60	14
2-61 — 2-73	23
2-74 Blank	23
3-1 — 3-2	31
3-2A	13
3-2B Blank	12
3-3	19
3-4	36
3-5	24
3-6	32
3-6A	32
3-6B Blank	13
3-7	2
3-8	8
3-9 — 3-10	24
3-10A — 3-10D	24
3-10E	26
3-10F Blank	24
3-11 — 3-12	16
3-12A	30
3-12B Blank	4
3-13	35
3-14	23
3-15	24
3-16	28
4-1 — 4-6	0
4-6A	2
4-6B Blank	2
4-7	2
4-8 — 4-9	0
4-10	12
4-11 — 4-13	0
4-14 — 4-15	7
4-16	0
4-16A	23
4-16B Blank	4
4-17	2
4-18	7
4-19 — 4-21	0
4-22	2
4-22A	2
4-22B Blank	2
4-23 — 4-27	0
4-28	10
4-29 — 4-30	6
4-31 — 4-32	3
4-33 — 4-34	8
4-35 — 4-38	12
4-39 — 4-42	16
4-43 Added	28
4-44 Blank Added	28
5-1	24
5-2	26
5-2A	2
5-2B Blank	2
5-3	33
5-4	14
5-5	22
5-6	24
5-6A — 5-6B	19
5-7	6
5-8	8
5-9 — 5-14	0
5-15	29
5-16 Blank	0
6-1	6
6-2	13
6-3	19
6-4	0

*Zero in this column indicates an original page.

USAF

TABLE OF CONTENTS

TABLE OF CONTENTS

LIST OF ILLUSTRATIONS

LIST OF ILLUSTRATIONS

LIST OF TABLES

SECTION I

GENERAL

1-1. PURPOSE.

The purpose of this technical order is to provide minimum lighting requirements and instructions and procedures for painting and marking of USAF vehicles.

1-2. GENERAL.

a. The provisions herein apply to all vehicles assigned to the USAF and are identified in Federal Supply Groups 23, 24, 38, 39, 58 and Federal Supply Classes 1740 and 4210.

b. The provisions of TO 35-1-3 apply to equipment of a vehicular configuration designated USAF Ground Support Equipment (GSE).

c. The term "vehicle" includes wheeled, tracklaying, and combined wheeled and tracklaying vehicles and chassis powered by a self-contained power unit, trailers, and semitrailers.

SECTION II
PAINTING OF VEHICLES

2-1. REQUIREMENT FOR PAINTING.

a. Repainting of vehicular equipment is authorized when adequate protection must be afforded against corrosion and the cost of repainting is less costly than spot painting. Repainting of surfaces which have been repaired following an accident is also authorized. However, equipment will not be repainted merely to change the color, gloss characteristics or to improve the appearance, except as indicated in step b. below. Frequent washing and polishing by operators will maintain the desired vehicle appearance. Normal deterioration of painted surfaces, such as chips, scratches, and minor corrosion, is to be expected and shall not be cause for complete repainting of a vehicle. Equipment programmed for replacement and removal from the inventory will not be repainted.

b. The Commanding Officer MAJCOM concerned may authorize refinishing of vehicles in colors specified in paragraph 2-2, when security factors are involved.

c. Spot painting, in lieu of complete refinishing, will be accomplished to the greatest extent when considered practicable. Paint in aerosol cans may be used to refinish small areas.

d. Bare surfaces of sections of bodies and sheet metal, which have become exposed by deterioration of paint or by accident, will immediately be spot painted to prevent deterioration of the sheet metal.

2-2. AUTHORIZED COLORS. (See Section V.)

2-3. For camouflage purposes, theater Commanders in overseas areas are authorized to deviate from the colors prescribed herein.

a. This authorization can also be applied to vehicle marking procedures, such as the use of lusterless black enamel for marking a vehicle painted olive drab (OD). An example reflecting overseas command exercise of this authority is Project Tone Down as authorized by USAFER 400-16. It is not necessary that overseas command deviations to color/marking procedures provided in paragraph 2-3 be published in this technical order; nor will prior approval by WR-ALC on an individual basis be required.

b. Within CONUS, prior approval for deviation from the prescribed color and marking procedures must be obtained from WR-ALC/MMIR.

2-4. All Air Force vehicles will be painted strata blue, color number 15045 of Federal Standard 595 Specification TT-E-489, except as specified below:

NOTE

When painting late model vehicles that have been painted with manufacturers acrylic type paint and primer, paint matches may be accomplished by the wet sample method. The paint for these vehicles may be procured through established local purchase procedures/ COPARS as required to match color and type of paint to meet manufacturers specifications.

a. Crash, fire and rescue, structural and ramp fire fighting, Fire chief and Assistant Fire chief vehicles shall be painted full gloss lime yellow Imrom polyurethane Paint NSN8010-01-036-3493. All other administrative use motor vehicles used to support fire fighting vehicles will remain the color specified in purchase requests. They may be equipped with distinctive identification markings, sirens, and rotating beacons as required for emergency use, provided that these items are affixed to a removable roof-mounted rack. The rack may be marked to identify a particular fire-fighting function.

NOTE

Fire protection vehicles currently painted red will not be repainted until the paint has deteriorated or been damaged to a point where repainting is deemed necessary.

b. Refuse trucks will be painted grey, color number 16081, full gloss enamel, Federal Specification TT-E-489, Type 1. FSN 8010-616-7496.

c. Fuel/oil servicing units, purging fluid, waste fuel, and flight line vehicles, except general purpose and aircraft refueling vehicles shall be painted full gloss yellow, color No. 13538. General purpose vehicles shall be painted Strate blue, color No. 15045. Aircraft refueling vehicles shall be painted dark green, color No. 24052.

NOTE

General purpose vehicles currently painted chrome yellow will not be repainted strata-blue until the paint finish has deteriorated or been damaged.

d. Base maintenance vehicles used for service and construction on landing strips, taxiways, perimeter roads, aircraft flight areas, etc., will be painted full gloss yellow, color number 13538.

e. In areas where snow or sand covered terrain is prevalent, the top surfaces of the hoods of yellow vehicles may be temporarily covered or painted lusterless black (color number 37038) to provide protection from excessive sun glare.

f. Instrument panel tops may be repainted with a lusterless paint to eliminate excessive glare. Relocation of data plates and decals is also permitted to eliminate glare.

g. In areas where extreme heat is prevalent and vehicles must remain stationary for extended periods of time with personnel remaining therein, the tops may be painted full gloss white, color number 17875, under the following conditions:

(1) Special purpose, construction and base maintenance vehicles which remain in a stationary position with personnel remaining in the cabs for operation of the equipment.

(2) Vans and semitrailer vans used for communications, photographic, repair shops, etc., and in which assigned personnel perform duties.

(3) Ambulances and convertible buses when regularly required to remain in a stationary position for extended periods of time with operators and/or patients aboard.

(4) Major commands have the option to approve the painting of tops white on sedans. No approvals will be granted for use below the Wing or Base Commander Level.

h. Forklifts, trucks, tugs, tractors, and trailers operated exclusively in warehouses and/or warehouse docks will be painted full gloss yellow, color number 13538.

i. Liquid oxygen/nitrogen transporting equipment will be painted strata-blue, color number 15045, except the top three-fourths of the tank which will be painted full gloss, white, color number 17875. Interior of compartments will be painted semi-gloss green, color number 24533 per Federal Standard 595.

NOTE

When storage compartments and trim prohibit painting the top three-fourths of the tank white, i.e., A/M32R-6, the tank will be painted white down to the top of the storage compartments.

j. Compressed gas cylinder simi-trailer will be painted full gloss, yellow, color number 13538, except the cylinders. All cylinders will be painted full gloss, white, color number 17875.

k. A/M 32R16 and A/M 32R17 propellant semi-trailers will be painted strata blue, color number 15045, except the top three-fourths of the tank will be painted insignia white, color number 17875 of FED-STD-595. Interior of compartments will be painted strata blue, color number 15045.

l. Deleted.

m. The interior surfaces of vehicles will be finished in color coats according to the following:

(1) Ambulances, station wagons used in lieu of ambulances, and multi-litter buses will be full gloss white, color number 17875.

(2) Closed type vehicles such as panel trucks, vans, instrument shops, etc. (personnel carriers not included) will be simi-gloss, green, color number 24533. When necessary to refinish the interior of truck or truck tractor cabs, the original color will be utilized, except that white, yellow or aluminum color will not be used.

(3) In closed type vehicles, such as pick-up trucks, etc. strata-blue, color number 15045, will be used.

(4) The original color of sedans shall be utilized when repainting is required. If this is impractical, use strata-blue, color number 15045.

(5) If it is impractical to retain the original finish in buses, use semi-gloss green, color number 24533. Floors and matting will be painted black.

(6) The interior of fire protection vehicles shall be painted green color No. 24300.

n. Engines, engine accessories, and components requiring repainting, will be painted with full gloss, gray, color number 16081, or they may be repainted with a heat resistant paint of the same color as the vehicle when engines such as agri-tractors, etc., are exposed.

o. Assemblies, subassemblies, and accessories, other than engines and engine accessories requiring refinishing after overhaul or repair, will be painted the color previously painted, except that those items previously painted olive drab will be painted strata-blue, color number 15045.

p. Exteriors of radiator cores will be painted with one thin coat of black lacquer.

q. Vehicles used by the Office of Security Investigation for undercover security purposes may be painted a color other than specified herein.

r. Mobile tactical communications system equipment/vehicles, mobility coded vehicles and those vehicles required to accomplish USAF missions in support of or in conjunction with USA/USN/USMC organizations on exercises, maneuvers, contingencies, or in general war, may be painted dark green color number 24052.

NOTE

Vehicles presently painted olive drab (OD), color numbers 24087 or 34087, or with polyurethane paint will not be repainted merely to change the color. Repainting will be accomplished only when paint has deteriorated or been damaged to a point where repainting is deemed necessary.

s. Assigned Recruiting Service vans used in advertising and publicity are exempt from the painting requirements of this TO. The colors and painting schems/designs for these vans will be as directed by the Commander, USAF Recruiting Service. The identification markings required by Section III of this TO are mandatory.

t. Metropolitan **and van type emergency ambulances shall be painted full gloss white, color number 17875. A 6 inch wide continuous stripe of orange, color number 12473 shall be painted immediately below the windows the entire length of both sides and rear of the vehicle.**

NOTE

Metropolitan **ambulances currently painted strata-blue will not be repainted until the paint finish has deteriorated or damaged to the extent to require repainting.**

u. Vehicle undercarriage, frame, running gear and wheels shall be painted black, color number 17038 or the same color as the exterior of the vehicle.

v. 463L and Vehicular Ground Support Equipment (GSE) shall be painted green, color No. 24052, i.e., aircraft fuel servicing vehicles, aircraft tow tractors, industrial tow tractors.

NOTE

463L and Vehicular Ground Support Equipment (GSE) painted colors other than specified in paragraph 2-4.v. will not be repainted solely to change the color. Repainting will only be accomplished when camouflage is deemed essential or when paint has deteriorated or been damaged to a point where repainting is considered necessary.

w. Compact law enforcement sedans (NSN2310-01-018-6668) shall be painted full gloss white, color number 17875.

x. CORROSION PREVENTION PAINTING. When approved by the Commanding Officer of the MAJCOM concerned, vehicular equipment may be painted with polyurethane paint as follows:

y. AFOG exhibit vehicles used in advertising and publicity are exempt from the painting requirements of this T.O. The colors and painting schemes/designs for these exhibit vehicles will be as directed by AFOG Commander. The identification markings required by Section III of this T.O. are mandatory.

(1) 463L, Vehicular Ground Support Equipment (GSE), Mobile Tactical Communications Systems Equipment/Vehicles, mobility coded vehicles, and those vehicles requiring tone down paint may be painted dark green, color number 24052, polyurethane paint conforming with MIL-C-83286.

(2) All other vehicles/vehicular equipment may be painted with a commercial off-the-shelf local purchase polyurethane paint. The color of paint shall be as specified in paragraphs 2-2 through 2-4. Commercial local purchase paint shall be applied in accordance with the paint suppliers recommendation.

2-5. CAMOUFLAGE PATTERN PAINTING.

a. Mobile tactical communications system equipment vehicles, mobility coded vehicles, 463L equipment and those vehicles required to accomplish USAF missions in support of or in conjunction with USA/USN/USMC organizations on exercises, maneuvers, contingencies, or in general war, may be camouflage pattern painted as illustrated in figures 2-4 through 2-33 with approval of the major command owning the vehicle.

NOTE

Only those vehicles programmed for use in continuing off-base missions will be pattern painted. Vehicles normally operated on the base proper will not be pattern painted.

b. CAMOUFLAGE PATTERN PAINTING PROCEDURES/INSTRUCTIONS FOR COMBAT CONTROL VEHICLES.

(1) This procedure describes the application of a newly developed pattern painting scheme using four different colors to obtain camouflage pattern goals for cited vehicles. Unlike older camouflage patterns, this is a general, all-purpose pattern. By changing one or two of the four colors, the same basic pattern can be made to work equally well in different seasonal and geographical areas. The only exception is winter arctic camouflage, which is solid white. The determination of initial pattern painting, or any changes which may be dictated by usage requirements, will be decided by local combat control team commanders, using the colors outlined in Tables 2-1 and 2-2.

(2) These instructions describe both the method of camouflaging and how it is to be applied to meet varying conditions. Initial painting may consist of complete spray painting to a solid color (color No. 1, Table 2-2) and the remainder of required colors No. 2 and No. 3. Black outlined areas shown in figures 2-4 through 2-33 are accomplished by spray or brush painting as illustrated in figure 2-2 and 2-3.

(3) PATTERN DESIGNS. The patterns, when painted on the vehicles, are a guide for a design developed for the specific item of equipment. The design is an outline drawing of the item on which wavy lines give the boundaries of the color areas. Within each such area is a number that stands for the color to be used in that area, except areas which are to be black are shown as solid black. As shown in Table 2-2, the color represented by the number varies according to the seasonal or terrain color combination being used. An individual design drawing is given for each of five views of the vehicle; front, back, left side, top, and right side.

(4) PREPARATION FOR PATTERN PAINTING.

(a) The first step in pattern painting a vehicle is to thoroughly clean the surfaces to be painted. A clean vehicle is a must. Applying paint to anything less than a totally clean surface will result in rapid peeling, cracking, and sealing of the new coating.

(b) The vehicle must be cleaned with detergent or with solvent and rinsed thoroughly or steam cleaned to insure a totally clean surface suitable for durable coating. Grease, oil, dirt, plastic letters, all loose and sealing paint, must be removed.

(c) Sanding of rough areas to remove the oxidized surface from the old paint will also make the new paint job look better and last longer. If bare metal is exposed following sanding and cleaning, a primer must be applied to the bare metal before the camouflage alkyd enamel is applied. The primer should be allowed to dry hard before the enamel is applied. The specification number for the primer is TT-P-1757.

(5) MARKING THE PATTERN ON THE VEHICLE.

(a) After the vehicle has been prepared, it is ready for pattern application. Use only the appropriate printed pattern design shown in Figures 2-4 through 2-29, for the vehicle. This pattern is outlined on the vehicle with chalk, using reference points on the vehicle and making a conscious effort to maintain the relative shape of the different color areas. High precision is not required in marking if the shape and size of the patterns are kept within reasonable tolerances (plus or minus 2 inches). Care must be taken, however, to avoid straight, vertical and horizontal lines wherever possible. The pattern is marked (fig 2-1.) with an abbreviation or number of the color to be used in each area (paint by the numbers) to guide the painter.

(6) PAINTS REQUIRED.

(a) The paints and thinners to be used in pattern painting are to be obtained through normal supply channels.

TABLE 2-1 - STANDARD CAMOUFLAGE COLORS

NR	ABBREVIATION	COLOR	NSN-ONE GALLON CAN
1	W*	White	
2	DS	Desert Sand	8010-00-111-8004
3	S	Sand	8010-00-111-7988
4	EV	Earth Yellow	8010-00-111-7968
5	ER	Earth Red	8010-00-111-8003
6	FD	Field Drab	8010-00-111-7943
7	EB	Earth Brown	8010-00-111-7998
8	OD	Olive Drab	8010-00-111-7940
9	LG	Light Green	8010-00-111-7930
10	DG	Dark Green	8010-00-111-7938
11	FG	Forest Green	8010-00-111-7937
12	BL	Black	8010-00-111-8005

* White water paste, specification MIL-P-13340. This is used where white is one of the four colors specified and is available in five gallon cans, NSN 8010-00-597-8253.

Canvas tops will be treated prior to painting with preservative coating, canvas, MIL-TT-P-595A. Primer coats will be applied using MIL-TT-P-1757, NSN 8010-00-515-2208 (1 gal can.)

(b) Enamel, Alkyd, Camouflage, Specification MIL-E-52798(ME) a new standard paint for use in the pattern painting. National stock numbers for this enamel are as follows:

(c) White Water Paste, Specification MIL-P-13340 is used where white is one of the four colors specified in the camouflage pattern (Table 2-2); NSN 8010-00-597-5253 for five gallon can.

(d) Butyl Cellosolve, Specification TT-E-776B, ethylene glysol monobutyl ether, NSN 6180-00-281-2001 for a one gallon can. This is used as a secondary thinner for the enamel.

(e) Xylene, Specification TT-X-916, NSN 6810-00-584-4070, is for a five gallon can and NSN 6810-00-290-4166 is for a 55 gallon drum. This is used for thinning the enamel.

(f) Mineral Spirits, Specification TT-T-291, NSN 8010-00-558-7026, is for a five gallon can and NSN 8010-00-246-6115 is for a 55 gallon drum. This is also used for thinning the enamel.

(g) Thinner, Cellulose-Nitrate Dope, Blush-Retardant, Specification MIL-I-6985B, NSN 8010-00-162-5289, is used in preparing paint for neoprene-coated tarpaulins such as the one used with the Gama Goat Vehicle.

(h) Preservative Coating Specification TT-P-595A does not have an NSN assigned. This is used in preparing paint for cotton duck canvas.

(7) PAINT MIXING.

(a) The type and proportion of thinners used with camouflage paint are extremely sensitive to temperature and humidity conditions.

(1) For temperatures between 30° to 60°, use only xylene. For temperatures between 60° and 80°, use only Mineral Spirits.

(2) With temperatures above 80° and moderate relative humidity (up to 5%) it may be necessary to add butyl cellosolve to allow flow-out of the paint. For these conditions, the maximum use of butyle cellosolve shall be 8:1 ratio of mineral spirits and butyl cellosolve, respectively.

(3) If raining or temperature is above 80° with high humidity (above 55%) the maximum use of butyle cellosolve shall not exceed 5:1 ratio of mineral spirits and butyl cellosolve, respectively.

(b) To paint cotton duck (canvas) tarps, paint (preservative coating, canvas) should be thoroughly stirred before mixing with the thinner. The paint should be thinned to a spraying consistency with xylene.

TABLE 2-2 - CAMOFLAGE PATTERN COLOR CHART FOR GEOGRAPHIC AND CLIMATIC CHANGES

CONDITION	COLOR DISTRIBUTION			
	45%	45%	5%	5%
	COLOR NUMBER			
	1*	2*	3*	4
Winter U.S. & Europe - Verdant (1)	FG	FD	S3	BL
Snow Temperate W/Trees & Shrubs (2)	FG	W	S3	BL
Snow Temperate W/Open Terrain - (2)	W	FD	S3	BL
Summer U.S. Europe - (1)	FG	LG	S3	BL
Tropics - Verdant	FG	DG	LG3	BL
Gray Desert	S	FD	EV3	BL
Red Desert	ER	EV	S3	BL
Winter Artic	W	W	W	BL

* Color Numbers

(1) Verdant: Generally green in summer due to trees, shrubs, and grass; in winter due to evergreens.

(2) This color combination is for use only in areas that occasionally have snow which does not completely cover the terrain, thus leaving trees or patches of soil bare.

(3) This color should be the color that most closely matches the color of the soil in the local area. A typical color is sand, but where other colors are closer to the predominant soil, that color will be used.

(c) For neoprene coated tarps, the enamel must be thoroughly stirred before mixing with the thinner to make sure of complete mixing of the pigment and dulling agents. The thinner combination shall be ½ pint of cellulose nitrate dope blush retardant to every one gallon of xylene. This mixture is used to thin the enamel and should be stirred thoroughly. To make sure the coating has enough pigment and dulling agent in it to coat the fabric well, stir the paint mix each time a spray gun is filled.

(8) PAINTING TECHNIQUES.

(a) Use of paint spraying equipment is the most efficient and economical way to apply the paint to the vehicle. The first step is to outline the pattern on the vehicle using the spray gun as shown in Figure 2-2. This method provides a boundary and controls the painting within its limits. The painter uses the chalk marks as a guide for his outlining but he must wipe the chalk marks off the surface as he paints or the markings will show through the new paint job and cause poor adhesions along the chalk lines.

NOTE

Bare metal areas must receive a coat of primer before the color is applied.

(b) The color areas are then filled in with the required color paint. The painter must make sure that the newly painted surface appears wet upon application. At first, it may be easier and more accurate to use a brush (½ inch) to fill in the small black areas (fig 2-3). As a higher degree of skill is gained with the spray guns, these may be used to fill in the black areas also.

(c) A small amount of brush painting may be used in places hard to reach with spray guns and to speed up work if there is not enough spray guns. However, while brush painting is efficient and effective for small areas, it is slower and uses more paint than spray painting.

NOTE

Roller painting was tested and found to be unsuitable for pattern painting of vehicles.

2-6. REPAIR OF DAMAGED SHEET METAL. The prime requisite for a high quality, smooth, even finish on vehicles depends upon the preparation of sheet metal sections of the body, etc., prior to painting. The specific type of vehicle concerned shall be a governing factor in the determination of the quantity of man-hours to expend for repair of sheet metal damage.

a. All bumps and dents causing any change in the original contour of the sheet metal will first be roughed out using hydraulic jacks and heat if necessary. The damaged area will then be returned to its original contour using body hammer, dollies, body files, and grinders.

b. To locate irregularities in the metal surfaces or remove paint and rust, a body file or an air/electric grinder may be used. A grinder with a 16 grit open coat disc is appropriate for removing rust, welds and metal, a 60 grit close coat disc may be used to remove file marks or scratches left in the repaired surface.

c. Body solder or other body repair material, such as plastic, may be used when it is determined to be practical and expedient. File or sand filled areas smooth prior to refinishing.

d. Thoroughly remove all excess solder acid, oil, or grease, deposited by solder paddle, with a solution of one part phosphoric acid to two parts water. When mixing acid and water always pour the acid slowly into the water, and stir the mixture. Personnel shall wear appropriate protective clothing to prevent acid contact with eye or skin.

e. Bare metal surfaces shall be cleaned and treated immediately with a solution of pre-treatment coating, in accordance with specification MIL-C-15328A.

2-7. CLEANING AND PREPARATION OF SURFACES.

a. Undercarriage of Chassis: Completely clean the vehicle undercarriage by applying under pressure a solution of hot water and vapor cleaning compound. Remove deposits of road tar, oil, and grease from recessed parts of springs, axles, and steering mechanisms.

b. Electrical Equipment: Protect all electrical equipment, such as generator regulators, generators, starters, distributors, etc., from direct impact with cleaning jets when using vapor or steam cleaning compounds. Disconnect battery cable prior to steam cleaning engine compartments.

c. Engines: Clean engine exterior, fire wall, steering columns, side pans, and underside of hood, using cleaning compound and hot water.

d. Battery and Carrier: Wash entire battery and carrier with a solution of sodium bicarbonate.

e. Interior: Clean dirt from inside of cab, upholstery, and the body.

f. Exterior: Wash the exterior of the vehicle with a pressure type power washer. Thoroughly wash all glass, head lamp lenses, and safety reflectors. Remove all deposits of cleaning compounds by using compressed air.

g. When the surface to be refinished is checked, cracked, or rusted, remove the paint down to the bare metal. All bare metal surfaces to be painted must be dry and free from all rust and loose scale. This can be accomplished by wire-brushing, applying pre-treatment coating, or flame descaling. This work will not be performed in the spray painting area or where spray painting is in progress. Spray, brush, or swab pre-treatment coating on bare metal surfaces in accordance with specification MIL-C-15328A. The pre-treatment coating shall be covered with primer as soon as practicable (preferably within 24 hours), as it loses its effectiveness after a short exposure to adverse weather conditions.

h. Old paint that is in good condition makes an excellent base for repainting and need not be removed. The edges of areas with remaining good paint should be feathered down so that cracks will not develop and breakoffs will not be visible.

CAUTION

Exercise extreme caution to insure that the paint being used for touch-up and spot painting is the same type as the present vehicle finish. The prime coat should be compatible with the paint being used, i.e., lacquer paint and lacquer primer.

i. When paint cannot be sanded to a smooth finish for overspraying without excessive expenditure of man-hours, residual paint may be stripped by use of paint and varnish remover, FSN 8010-165-5536.

j. Fuel and oil servicing trucks and trailer tanks shall be drained of all fuel and oil prior to painting, and the tanks will be completely filled with water or the vapors will be removed with steam, in accordance with T.O. 36Y31-1-1. The steam hose shall be of conductive rubber and shall

be grounded to the truck; the truck shall also be grounded before steaming operations are started.

k. Rust preventive compound that has been applied to parts and sections of the sheet metal and bodies shall be removed by a spray application of a mixture of one part of compound, grease cleaning, Ordnance stock number 51-C-1581-555, one part trichloroethane, Federal Specification O-T-620, and three parts kerosene, FSN 6810-261-7453. Allow the mixture to penetrate for approximately five minutes, then respray. Before it dries, remove the softened material with a steam cleaner. If removal is incomplete and reapplication of the solvent is considered necessary, water condensed from the steam cleaning must be allowed to dry completely before respraying with the solvent. This work will be performed only in exhaust-ventilated booths with a minimum face velocity of 200 feet per minute (fpm). Normally, no more than one operator will work in the booth at one time, except when operational necessity requires more than one operator in the booth. All operators will wear protective organic vapor cartridge respirators, NSN 4240-00-069-2684, coveralls, gloves and boots.

l. In instances where the chrome finish is deteriorated on body hardware, exterior trim mouldings or bumper bars and replating is considered economically feasible, restoration to original finish may be made. Where facilities and/or funds are unavailable for replating, these parts may be painted with applicable color coat when they are rusted or damaged excessively.

m. Preparation of Surfaces for Application of Polyurethane Paint MIL-C-83286.

1. Surfaces for all vehicular equipment except C and E Vans/Shelters shall be prepared in accordance with T.O. 1-1-8, MIL-STD-808 Air Force change drawing no. 98752-7737593.

2. The surfaces of C and E Vans/Shelters for application of polyurethane paint may be prepared by either MIL-P-87112 polysulfide primer or MIL-P-23377 epoxy primer. The major command owning the vehicle may specify the primer to be used. Refer to T.O. 1-1-8 for mixing and application of epoxy primer MIL-P-23377. Refer to MIL-P-87112 for instructions for mixing and application of polysulfide primer. Pretreatment of aluminum with MIL-C-5541/MIL-C-8176 chromate conversion coating and magnesium with MIL-C-3171 chromic acid brush-on solution is required prior to application of polysulfide primer. For pretreatment of galvanized steel, degrease with methylethylekeytone followed by pickling with MIL-C-10578, Type II corrosion removing compound. Apply two coats of polysulfide primer, preferably with airless spray gun. Each coat should provide a dry film thickness of 1.0 to 1.5 mils (.025 to .035 mm). Allow 45 minutes drying between each coating.

2-8. MASKING.

a. Prior to spray gun operations, it is necessary to cover or mask all parts, such as windows, rubber and chrome mouldings, gages, lubrication fittings, data plates, instructions, and similar components, which are not required to be painted. Unpainted radiator cores will also be masked to prevent the application of paint which may contribute to overheating of the cooling system. Radiator cores originally painted by the contractor will be repainted only to the extent necessary to prevent corrosion.

NOTE

Data plates will be covered with masking tape in lieu of being removed.

b. Small areas or irregularly shaped parts will be covered with crepe-backed masking tape. Large areas will require a sheet of wrapping or other paper slightly smaller than the part to be masked. This will be held in palce by a strip of masking tape. Overlap the edge of the paper with tape applied to the surfaces being masked. Masking provides a convenient method for spray-painting to irregular outlines.

c. Apply paste-like materials to areas where paint is not desired. When the paint is dry, wipe these areas clean.

d. When spraying engines, the use of bandages and sock, instead of masking tape, to protect rubber hose, ignition wires, and flexible tubing saves much time and material. The bandages will be fabricated from pieces of cloth cut to fit the part to be covered, the length being determined by the length of the object, allowing the bandage to overlap about one-half the circumference. Drawstrings at each end and a string around the center of the bandage will prevent over-spray from contacting the protected part. The sock is a cloth bag which fits over the ignition wires and has a drawstring which is drawn and tied below the distributor cap.

e. Cardboard shields may be local-purchased or fabricated to protect vehicle tires while spraying wheels.

f. When applying the markings prescribed in Section III, consideration should be given to the local purchase of strips of reflectorized tape and to the use of precut paper masks in lieu of stencils.

NOTE

Other suitable type discs of appropriate grits may be utilized as deemed necessary.

2-9. PRIME COATS.

a. The first coat of primer-surfaces will be applied within 24 hours after completion of cleaning or treatment of bare metal surfaces. Allow it to dry thoroughly, then sand lightly.

b. Apply one or two coats, as required, of sealer, surface, FSN 8010-598-5451, to wood surfaces of vehicle bodies, allowing a minimum of one hour drying time between coats.

c. Apply a medium coat of bituminous paint, FSN 8030-664-4969, to undersurfaces of wood floor decking.

d. When it becomes necessary to replace wooden floors of trucks and trailers, use hardwood material and treat in accordance with MIL-STD-1223 or obtain a suitable pretreated hardwood material from local commercial market. The pretreated hardwood material obtained commercially shall be material that is normally used commercial industry for flooring trailers, trucks and all other vehicular equipment.

e. Prime coats for polyurethane paint MIL-C-83286 will be applied in accordance with TO 1-1-8. Primer conforming to MIL-P-26915, Type I, shall be utilized on all steel surfaces except stainless steel, mill-galvanized, mill-electro-zinc coated and mill-aluminized stock surfaces.

WARNING

All spray painting will be accomplished in an exhaust ventilated booth meeting requirements of OSHA 1910.107. Respiratory protective devices will be used when required by local safety office and medical services Bioenvironmental Engineer.

2-10. FINISH COATS.

a. ENAMEL. Apply one light coat of enamel of the appropriate color, as specified in paragraph 2-2, and mixed according to the manufacturer's specifications. This coat should be very light to facilitate quick drying and to provide a tacky surface for the application of the final coat. The second or final coat should be applied to provide complete coverage and produce a smooth even surface free from runs, sags and over-spray.

b. LACQUER. Acrylic lacquer paint may be used for all spot painting and the painting of new finishes which must blend with the old finish. Lacquer may be applied either hot or cold. Use lacquer in accordance with Federal Specification TT-L-32, and thin with blush retardant thinner Specification MIL-T-6095 or as recommended by the paint manufacturer.

NOTE

When lacquer is to be applied over fresh enamel, a sealer, fast drying thinner or low penetrating thinner as recommended by the manufacturer must be used.

c. Simonizing, waxing, or polishing of USAF vehicles by commercial contract is authorized only when in-house cost exceeds cost of obtaining like service through commercial resources. The waxing and polishing of USAF vehicles in accordance with good commercial practice will be left to the discretion of the Base Commander. This work will be closely monitored to insure that proper material and/or procedures are utilized.

d. Repainted vehicles shall bear a temporary notice, affixed to the dash panel, reflecting "DO NOT WASH, POLISH, OR WASH WITH DETERGENTS BEFORE (enter date). WASH AS OFTEN AS REQUIRED WITH WATER ONLY." (The time element will coincide with the paint manufacturers recommendation.)

e. The painted finish of garnish moldings and instrument panels of the interiors of sedans will not be painted if the finish is serviceable and if restoration to original condition can be accomplished by cleaning and applying wax compound.

f. Polyurethane paint MIL-C-83286 finish coats shall be applied in accordance with T.O. 1-1-8 and MIL-STD-808. Air Force change Drawings SA-ALC98750-7545352 and WR-ALC 98752-7737593.

2-11. NON-SLIP MATERIALS. Non-slip fabric or walkway compound may be applied to stepping, standing, and walking surfaces of vehicles to eliminate potential safety hazards.

2-12. SPRAY GUN PROCEDURES.

a. To obtain the best results when spray-painting, the gun should be held perpendicular to the work at all times and approximately 6 to 10 inches from the surface. The proper stroke is made with a free arm motion, keeping the face of the air cap parallel with the surface at all points on the stroke. The ends of the stroke are feathered out by beginning the stroke before pulling the trigger of the gun and releasing the trigger just before ending the stroke. Avoid arcing the gun during the stroke. to prevent uneven application and excessive overspray at the end of the stroke.

b. Adjust gun to operate at maximum speed consistent with material, rate of flow, surface, and individual skill.

2-13. SAFETY PRECAUTIONS. The safety precautions contained in Air Force Regulation 127-101 which are applicable to the operation of vehicle paint shops and paint shops and spray-painting of vehicles shall be adhered to during cleaning and repainting of vehicles and ground servicing and powered ground equipment. The following specific safety precautions will be taken to insure the safety of personnel and to prevent accidental damage to equipment:

a. Paint spray, respirator, NSN 4240-00-022-2524, will be worn by painters during spray operations.

b. All indoor spray-painting shall be accomplished in a vehicular paint spray room equipped with spray booths having a minimum face air velocity of 125 fpm.

c. (Deleted)

d. (Deleted)

e. Smoking is prohibited in the paint shop. The mist that comes from a spray gun is highly flammable, and a spark or flame of any type will cause it to flash or explode.

f. To eliminate fire hazards, it is essential to keep the paint shop clean. Walls and floors of paint spray booths should be covered with non-combustible product that can be removed when dirty. Spray on peel-off products are commercially available.

g. Dirty rags and paper refuse shall be kept in separate metal containers with self-closing lids and appropriate markings. The contents shall be removed and disposed of at the end of each operating shift.

h. All electrical installations and equipment utilized in painting areas shall comply with the requirements of NFPA STANDARD NO. 33, Spray Application Using Flammable Materials and National Electric Code Number 70.

i. All supplies of paints, thinners, etc., authorized within the paint rooms, shall be kept in a metal cabinet ventilated by vent holes to prevent accumulation of vapors. Thinners, solvents, and other highly volatile, flammable agents shall be kept in approved safety cans.

j. All paint-spraying equipment shall be kept thoroughly clean and shall be inspected frequently to insure that it is in serviceable condition.

k. Frequent inspections shall be made of electrical equipment by qualified electricians to insure proper operation and to eliminate fire hazards due to short circuits, defective electric switches, or improper maintenance.

l. The paint-spray room or paint spray booths shall be protected by an adequate amount of the proper type fire extinguishers.

m. All personnel engaged in acid or caustic cleaning operations shall wear rubber gloves, aprons, boots, goggles, and respiratory protection equipment approved by Base Medical Services and Ground Safety.

n. No acid or other oxidizing agents shall be permitted in the paint room or stored where they may come in contact with painting materials at any time.

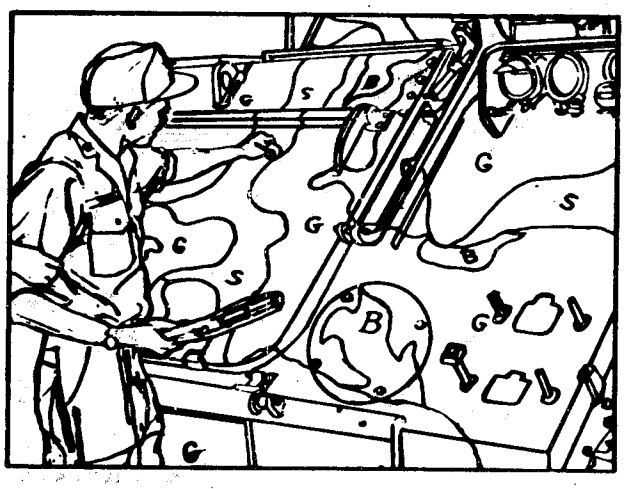

Figure 2-1. Pattern Application With Chalk.

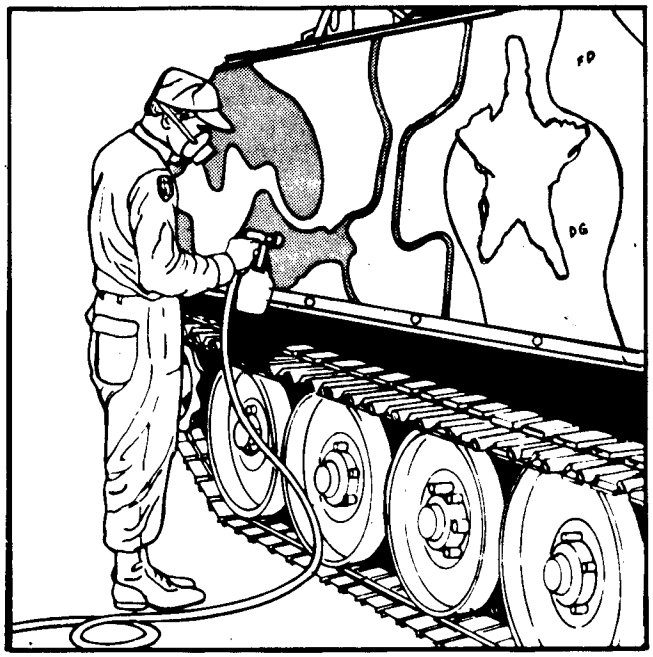

Figure 2-2. Pattern Outline In Color, Black Spray.

Figure 2-3. Pattern Outline In Color, Black Brush On.

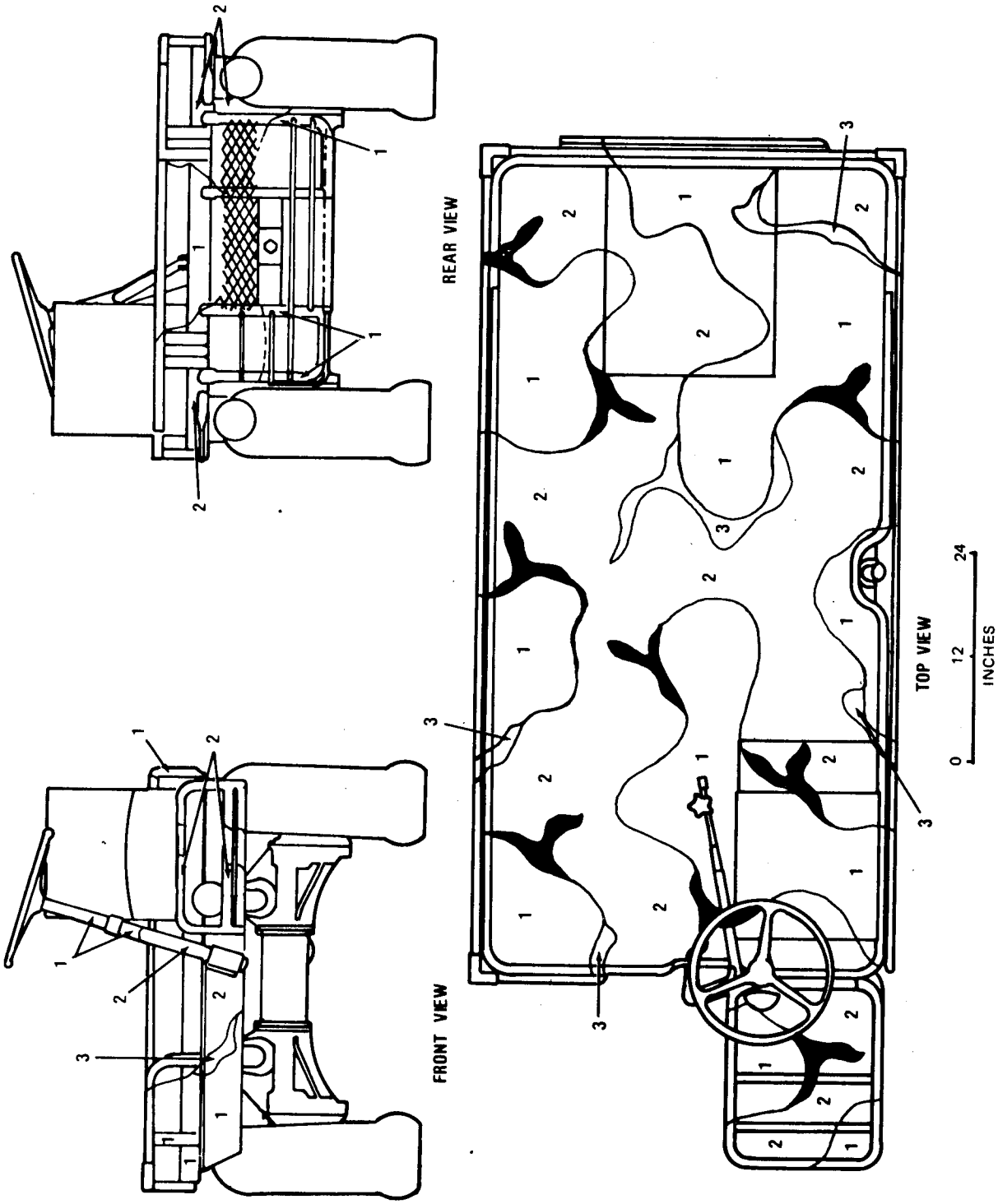

Figure 2-4. Truck, Platform, Utility: ½ Ton, M274. (Sheet 1 of 2)

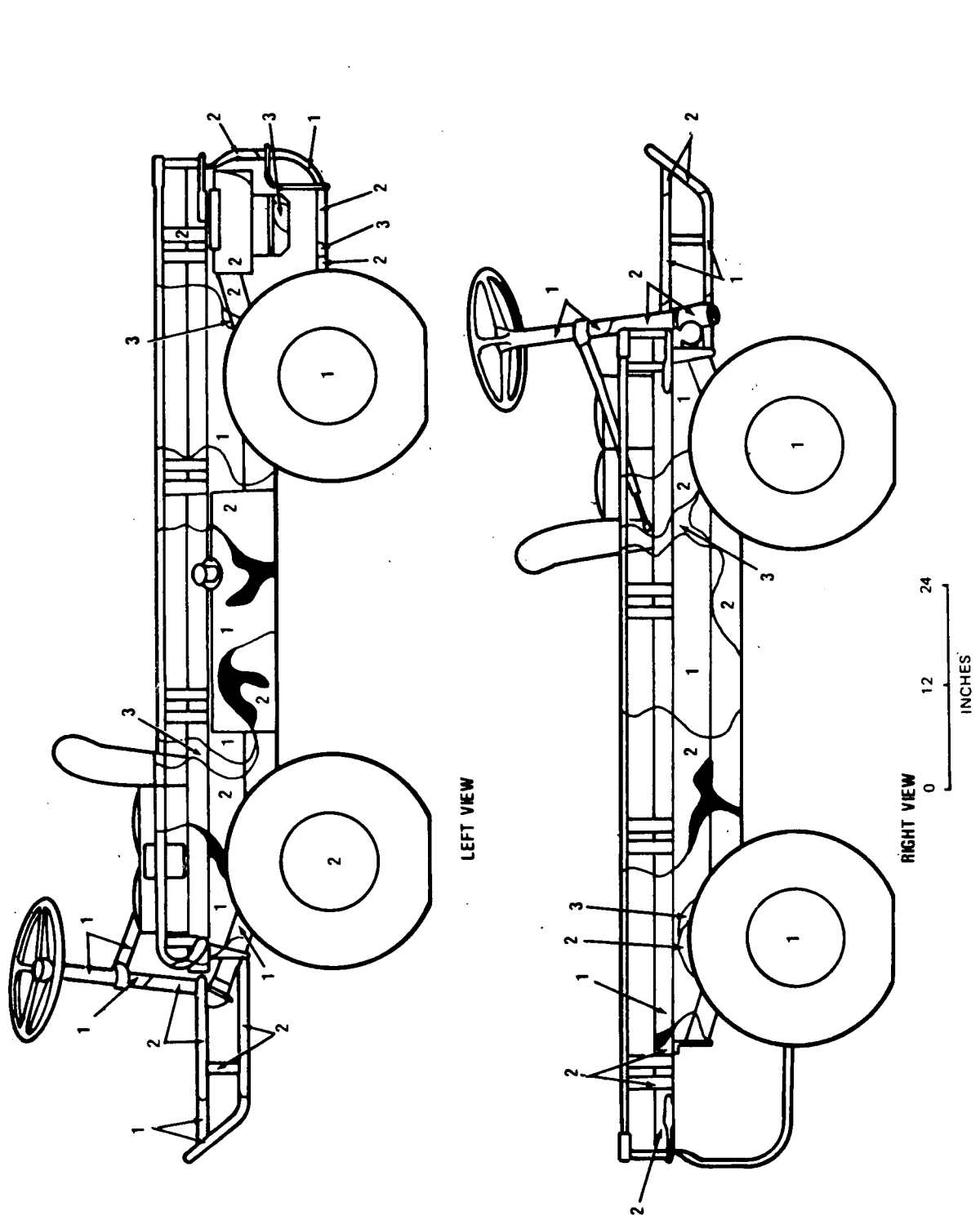

Figure 2-4. Truck, Platform Utility: ½ Ton, M274. (Sheet 2 of 2)

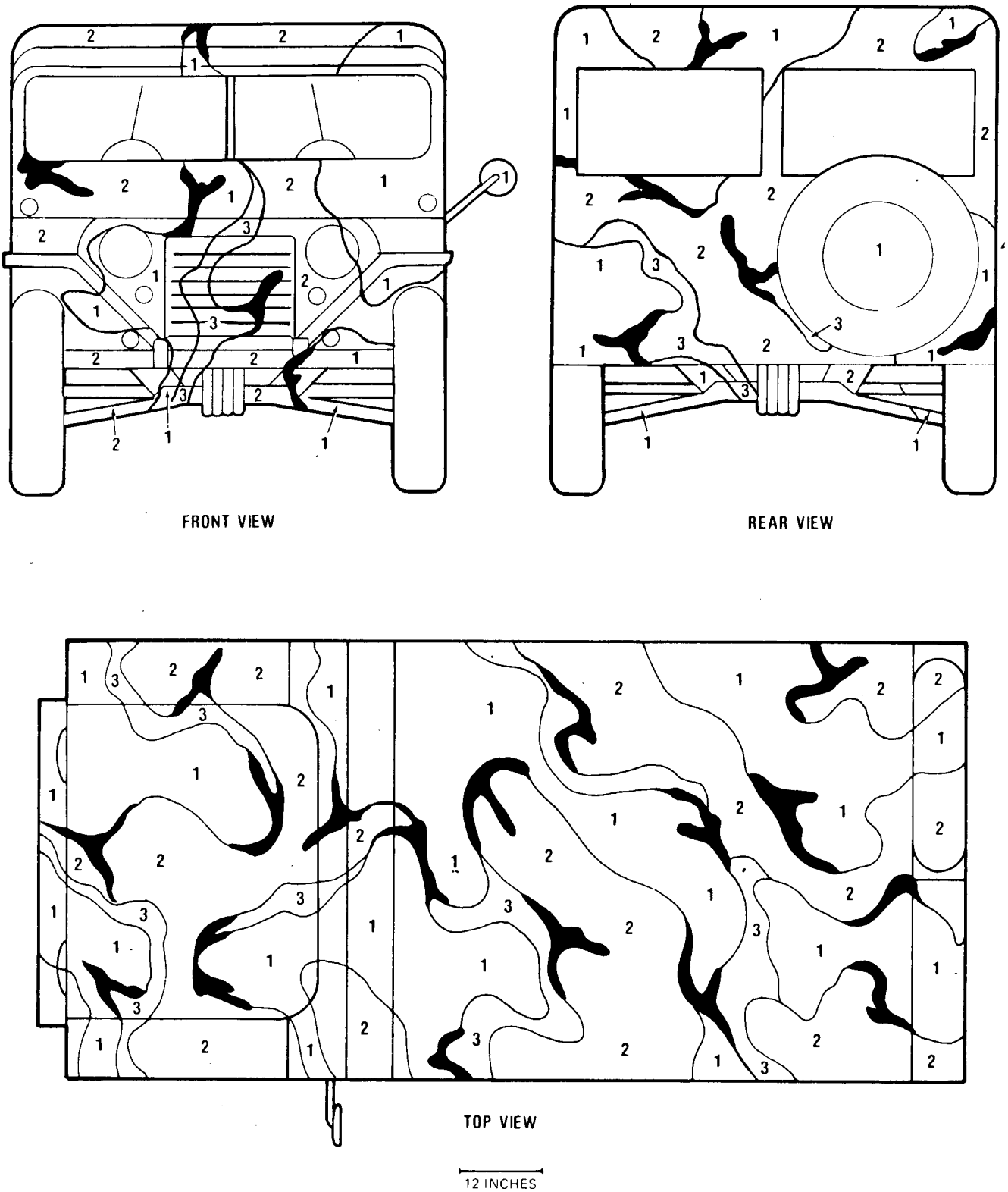

Figure 2-5. Truck, Utility: ¼-Ton, M151 (W/Canvas). (Sheet 1 of 4)

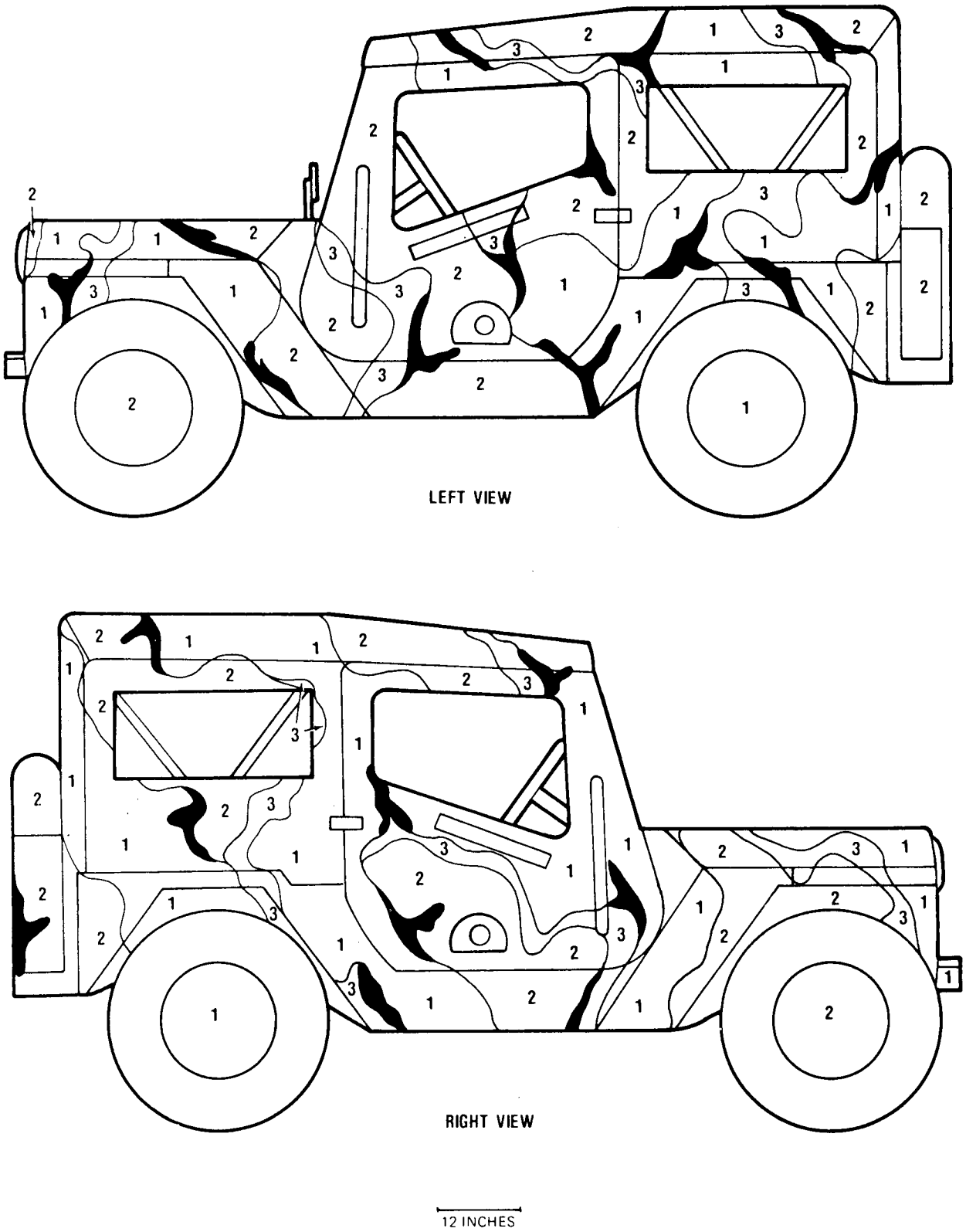

Figure 2-5. Truck, Utility: ¼-Ton, M151 (W/Canvas). (Sheet 2 of 4).

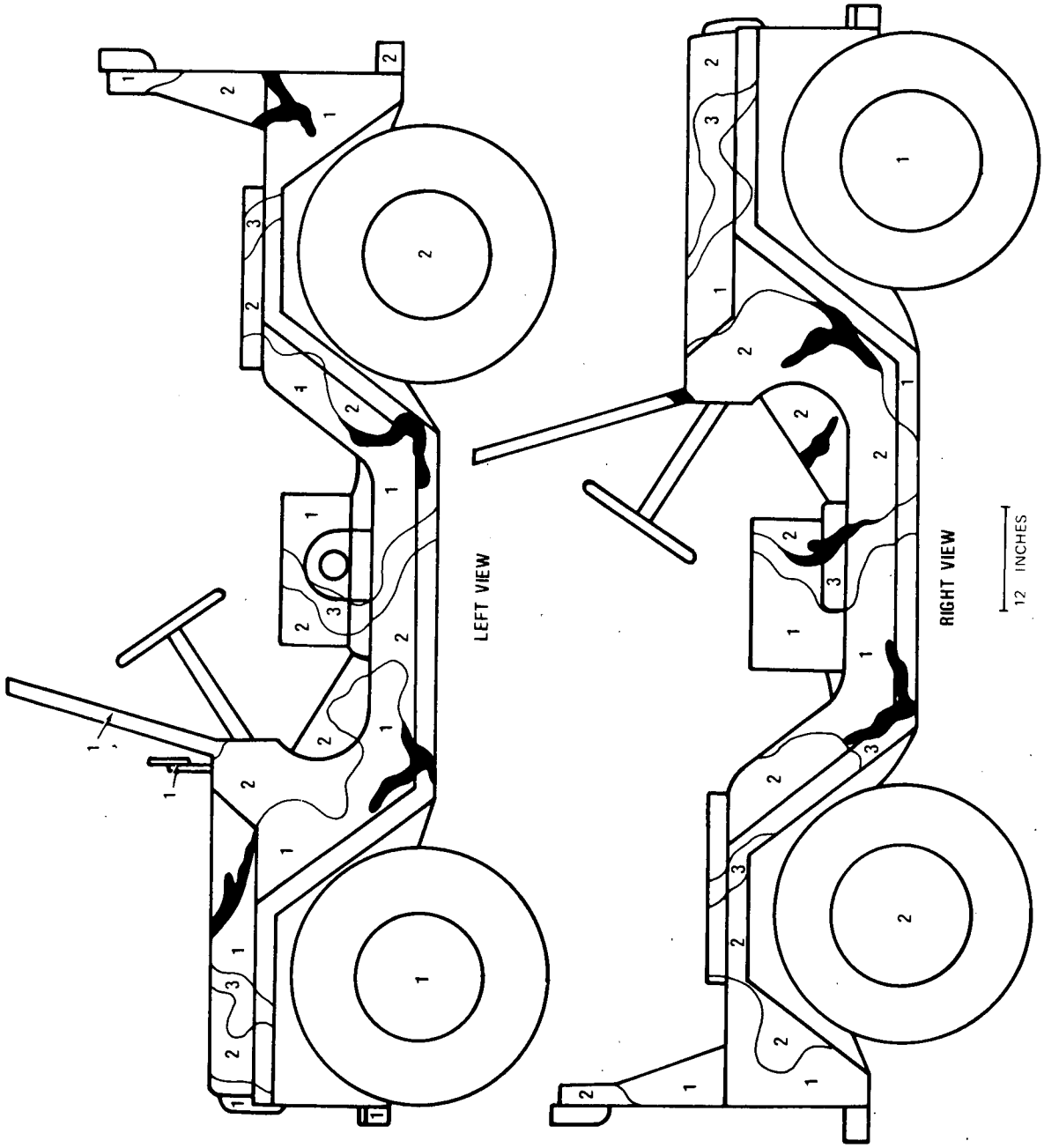

Figure 2-5. Truck, Utility: ¼-Ton, M151 (W/O Canvas). (Sheet 3 of 4).

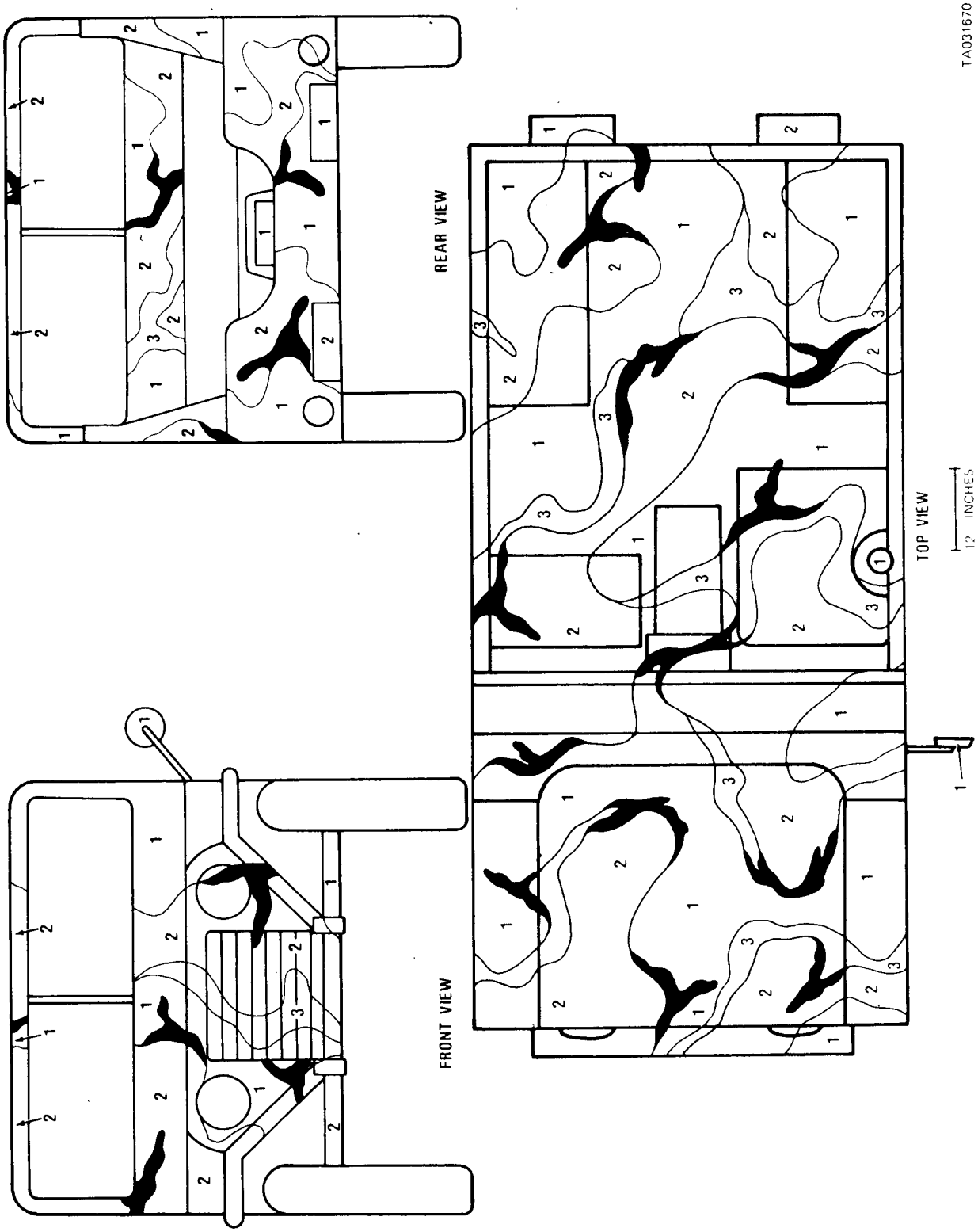

Figure 2-5. Truck, Utility, ¼-Ton, M151 (W/O Canvas). (Sheet 4 of 4).

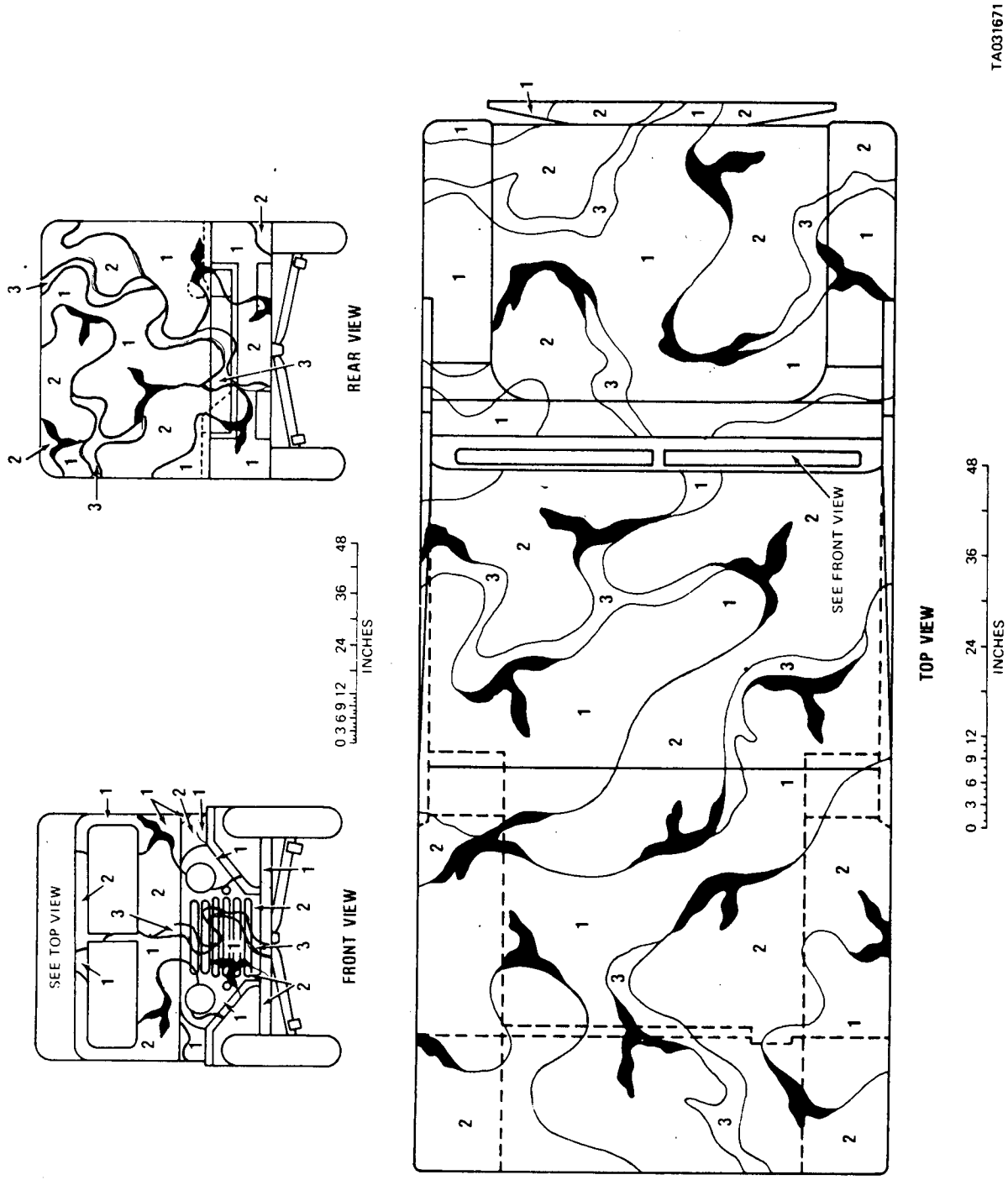

Figure 2-6. Truck, Ambulance Frontline: ¼-Ton, M718. (Sheet 1 of 2)

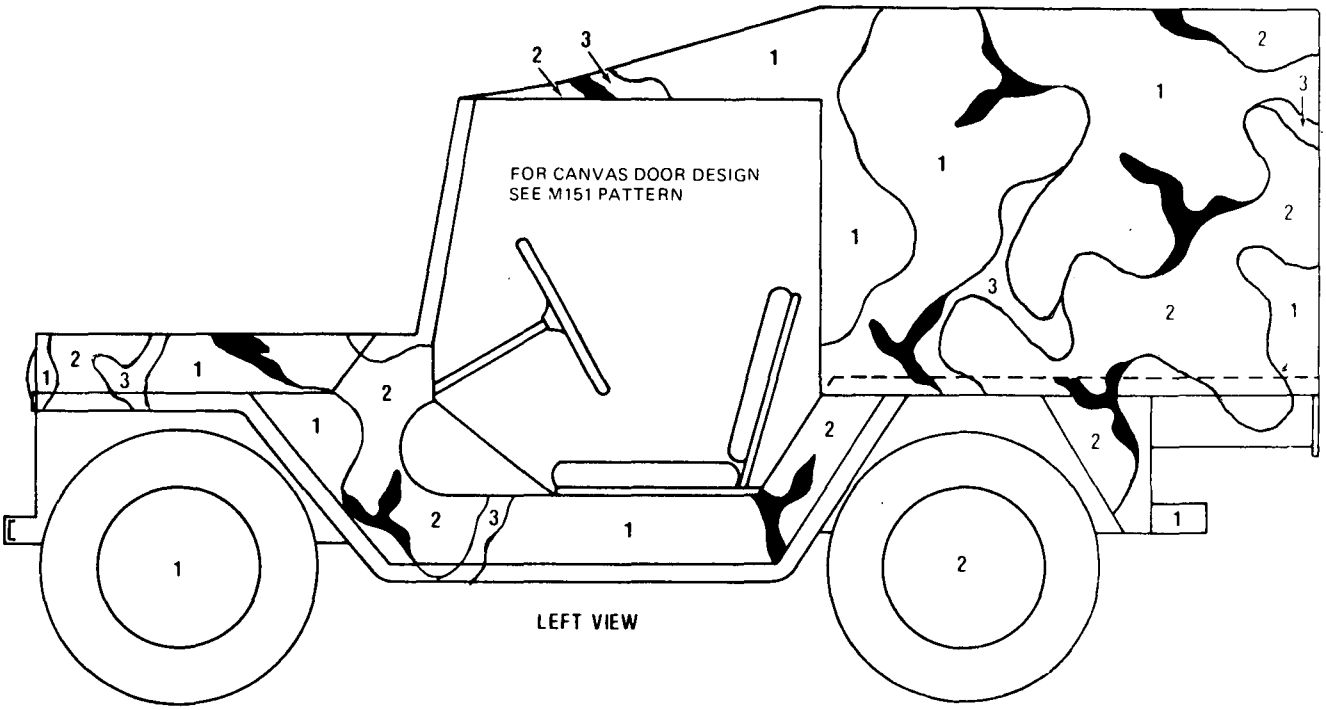

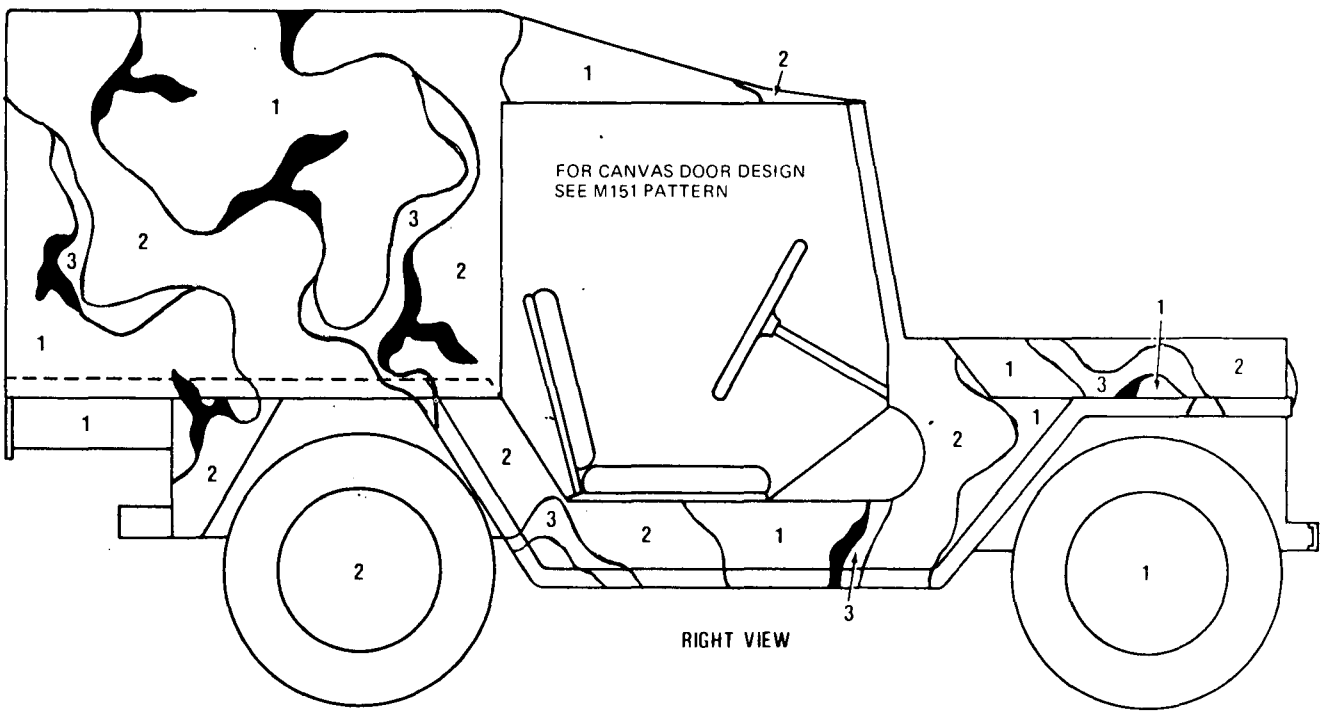

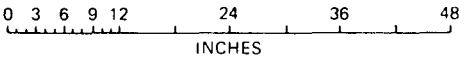

Figure 2-6. Truck, Ambulance Frontline: ¼-Ton, M718. (Sheet 2 of 2)

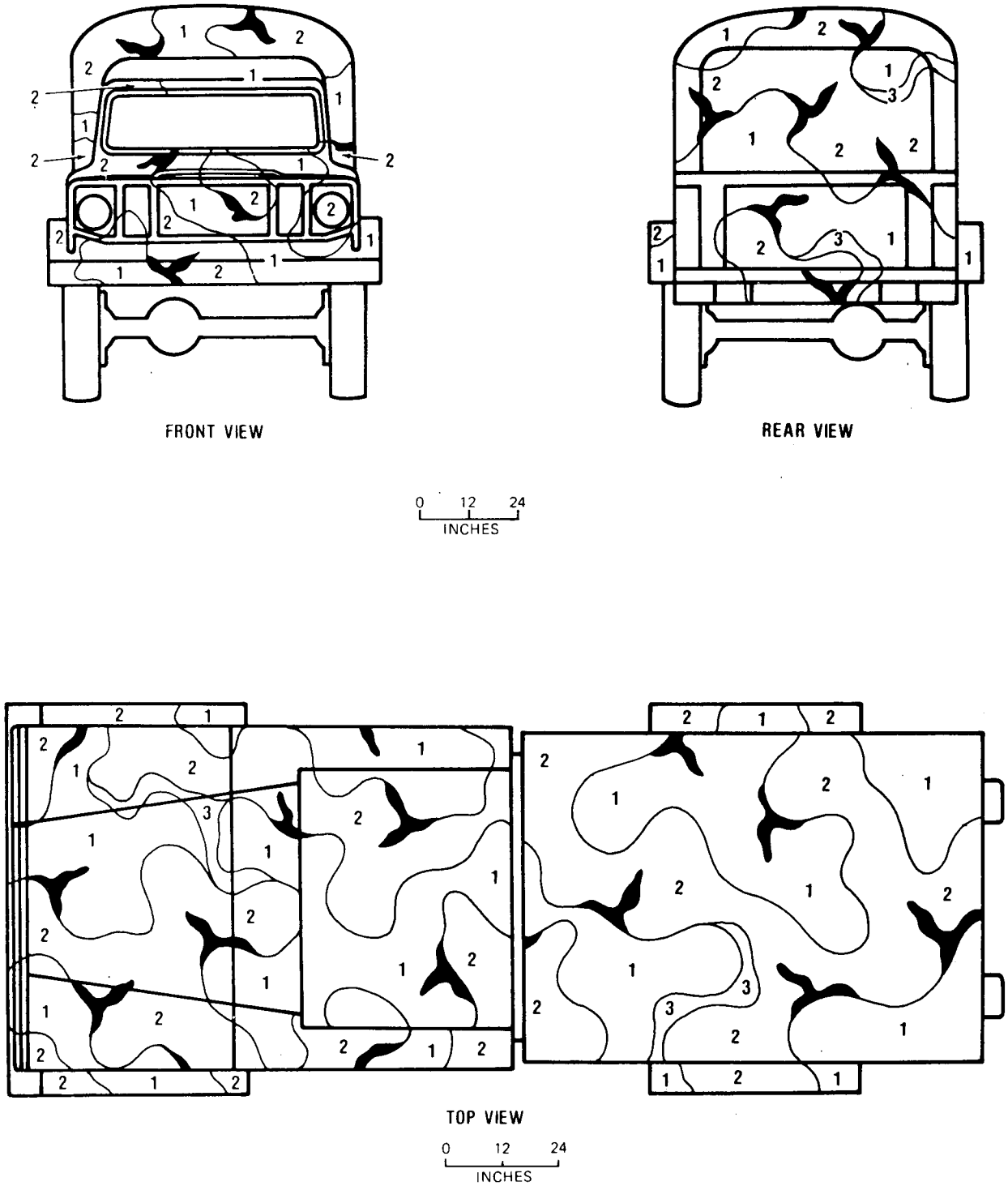

Figure 2-7. Truck, Cargo: 1¼-Ton, M715. (Sheet 1 of 2)

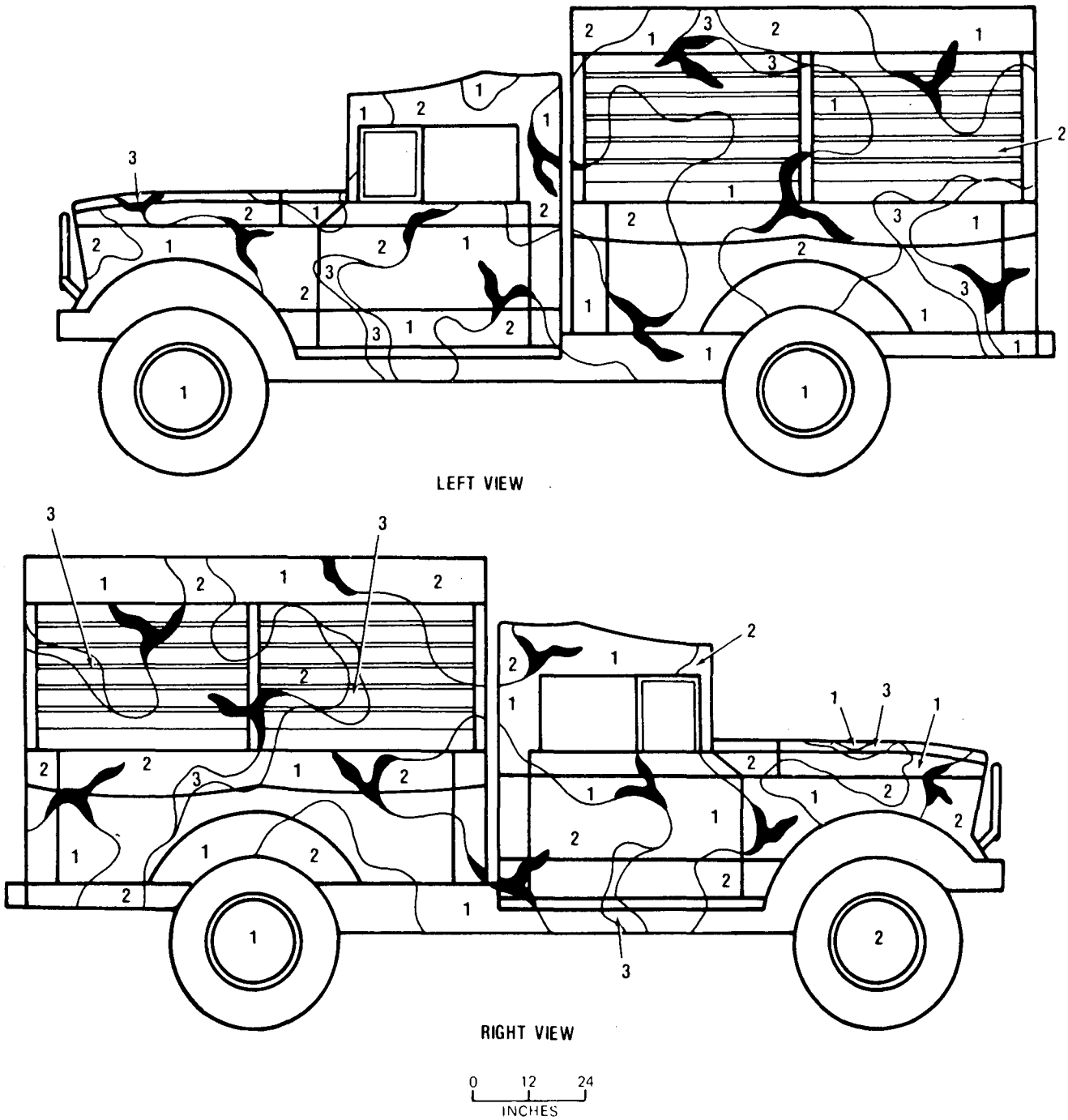

Figure 2-7. Truck, Cargo: 1¼-Ton, M715. (Sheet 2 of 2)

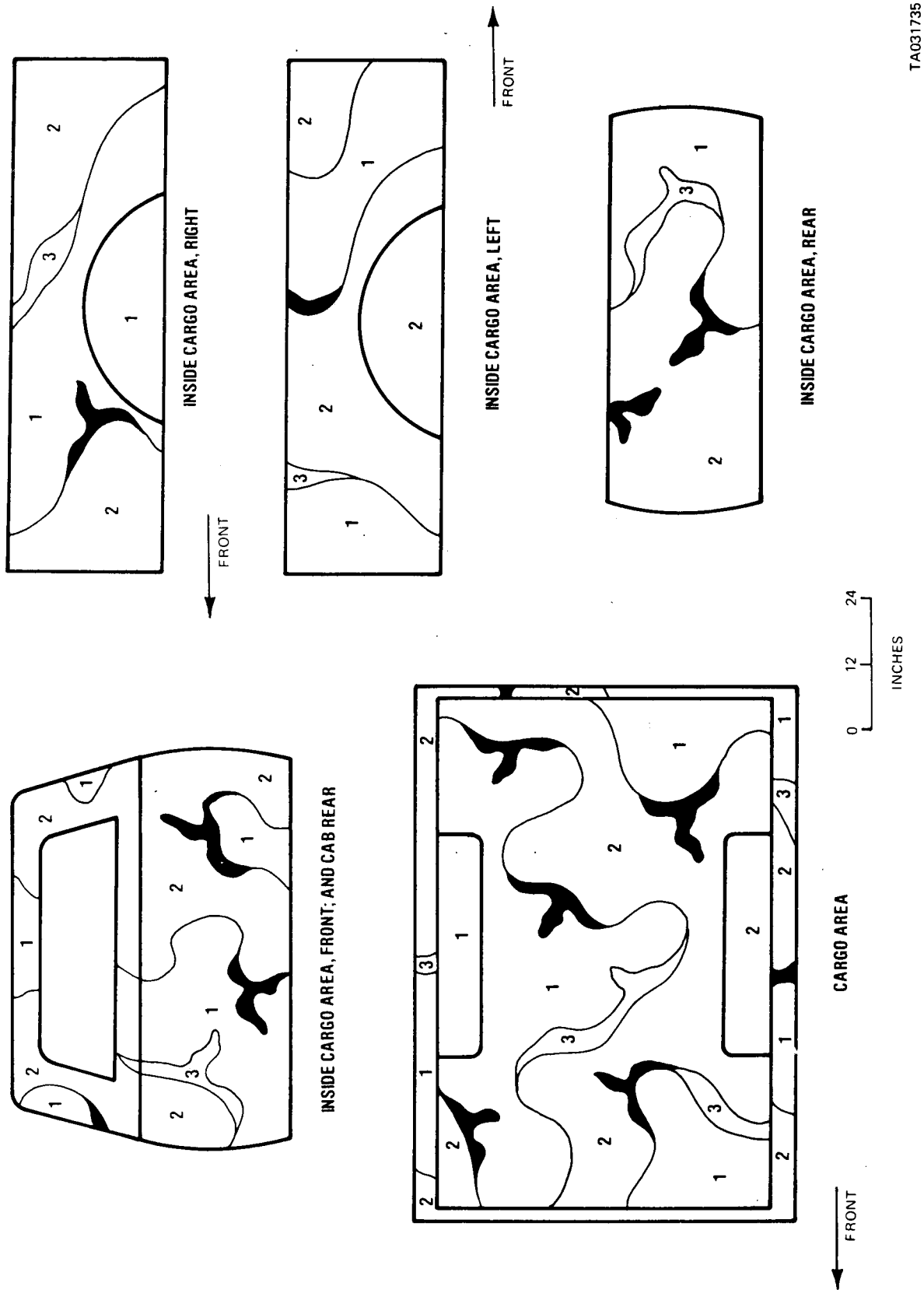

Figure 2-8. Truck, Cargo: 1¼-Ton, M880 (See M715).

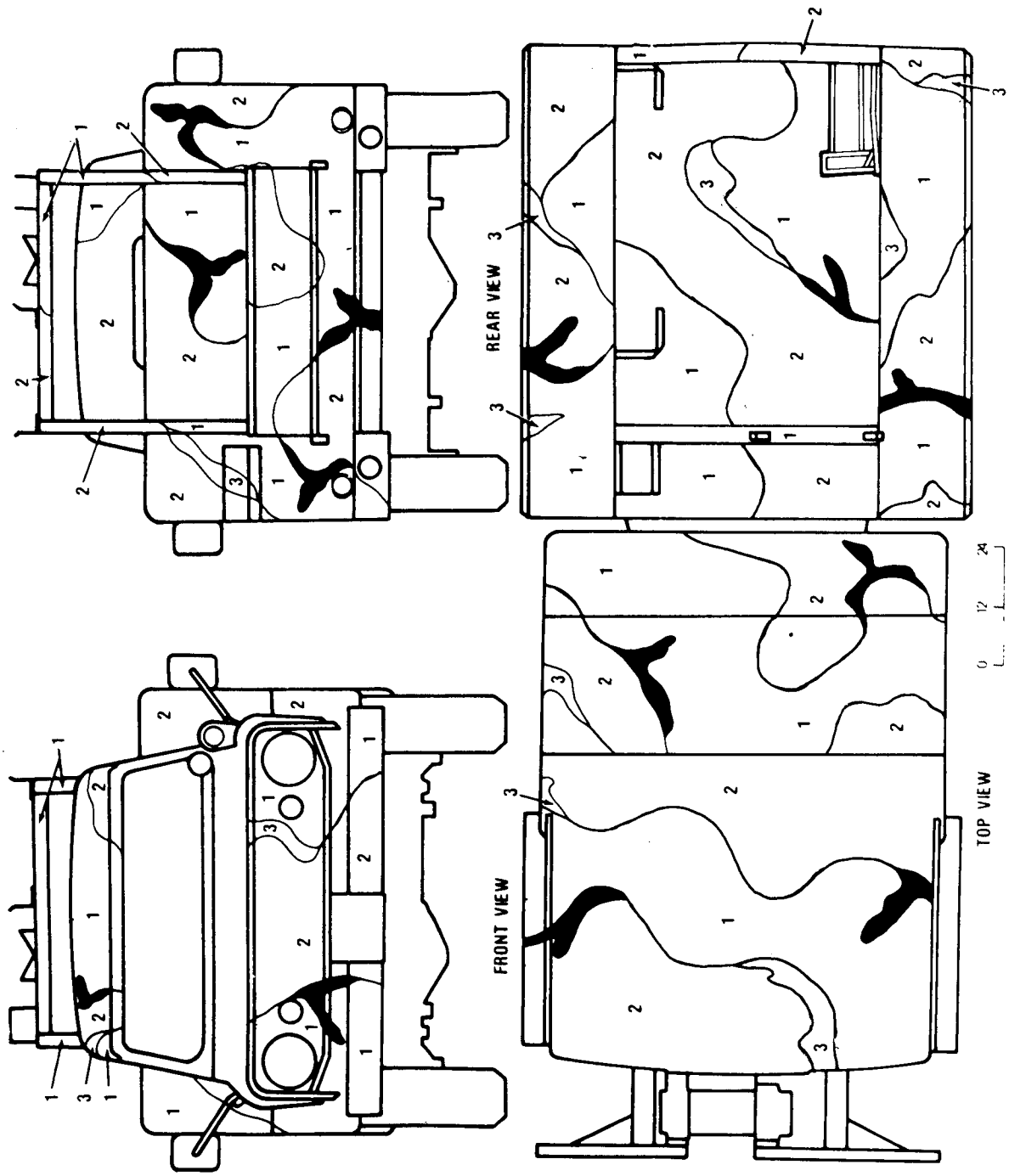

Figure 2-9. Truck, Maintenance: 1¼-Ton, M726 W/Winch. (Sheet 1 of 2)

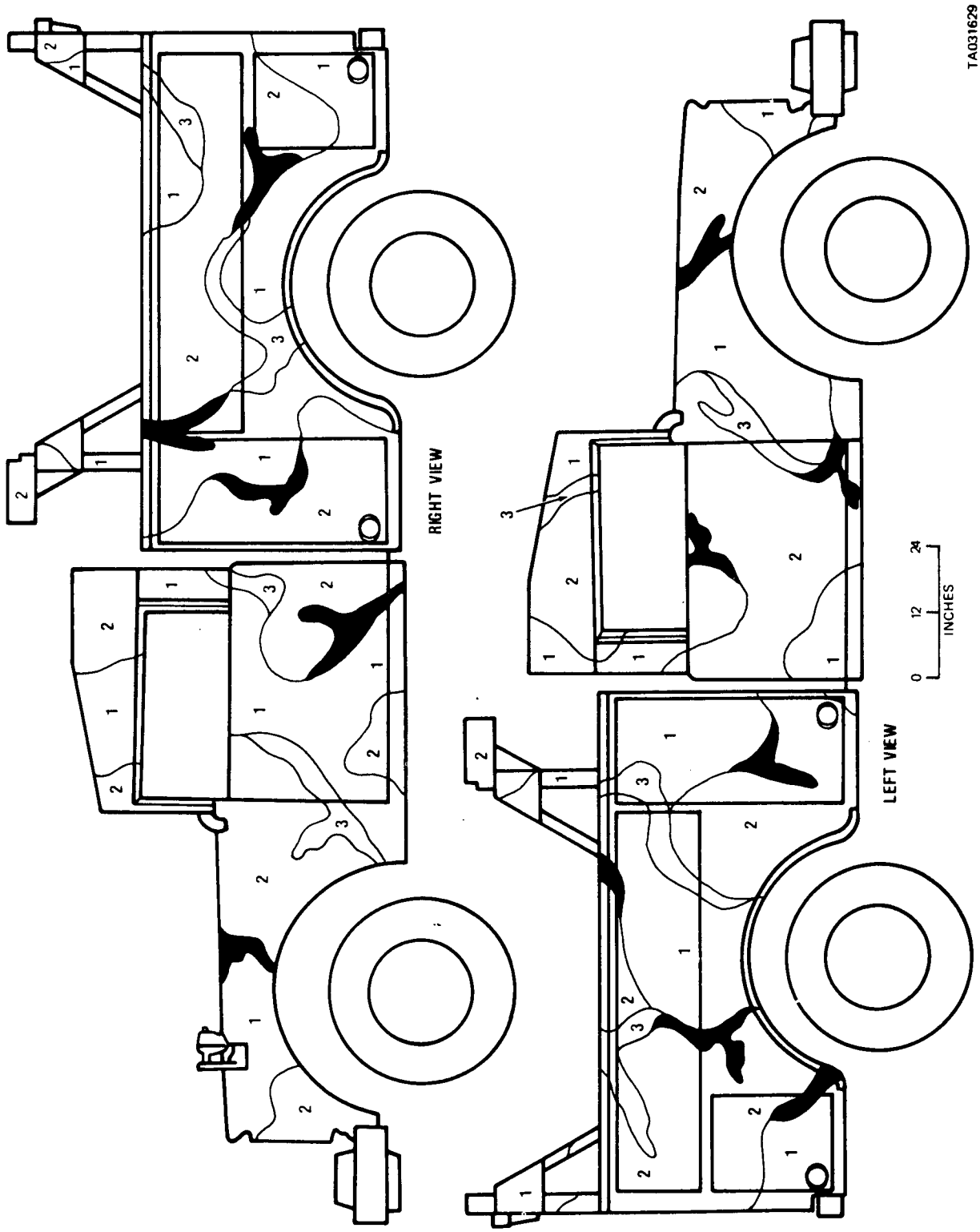

Figure 2-9. Truck, Maintenance: 1¼-Ton, M726 W/Winch. (Sheet 2 of 2)

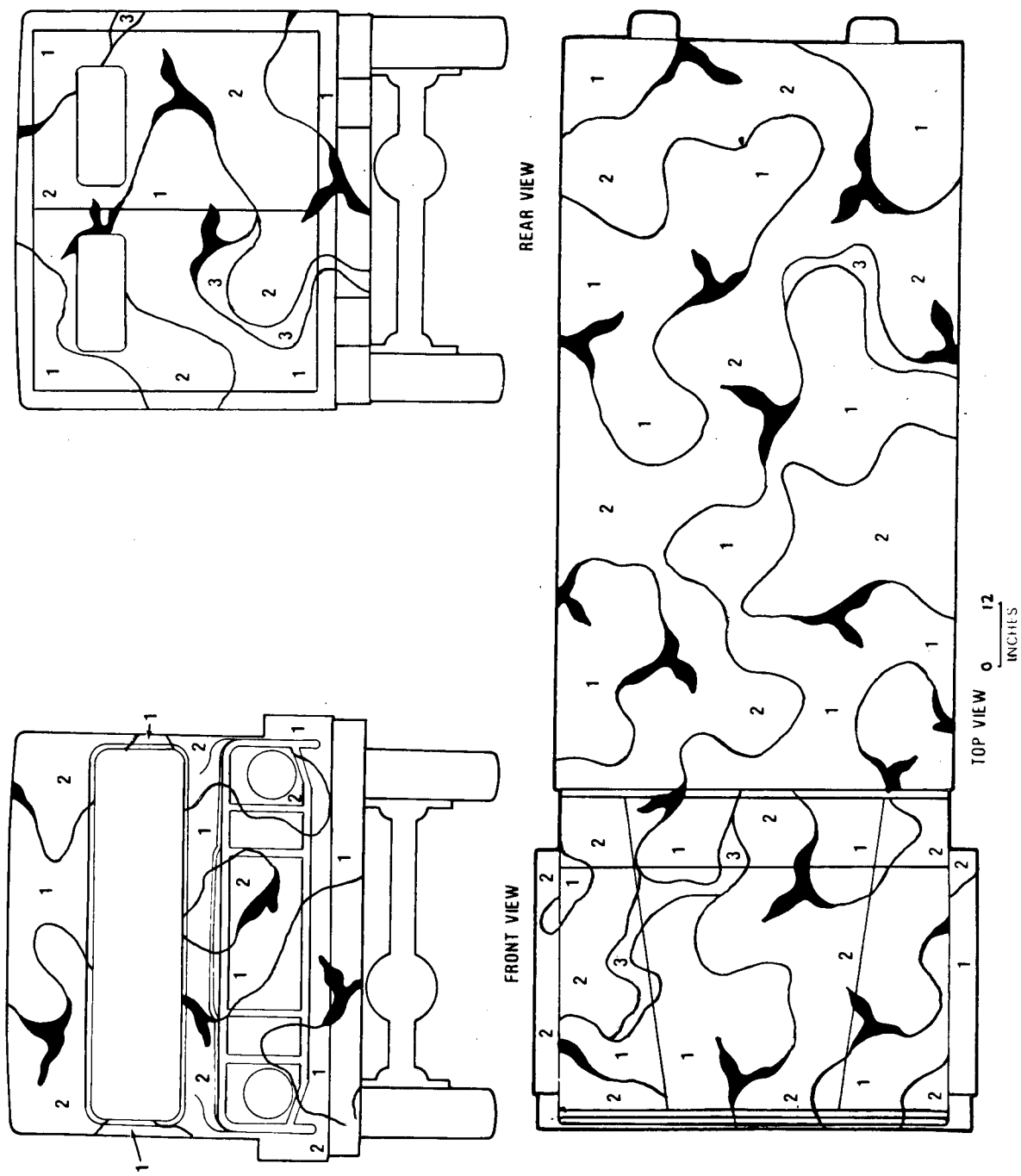

Figure 2-10. Truck, Ambulance: 1¼-Ton, M725. (Sheet 1 of 2).

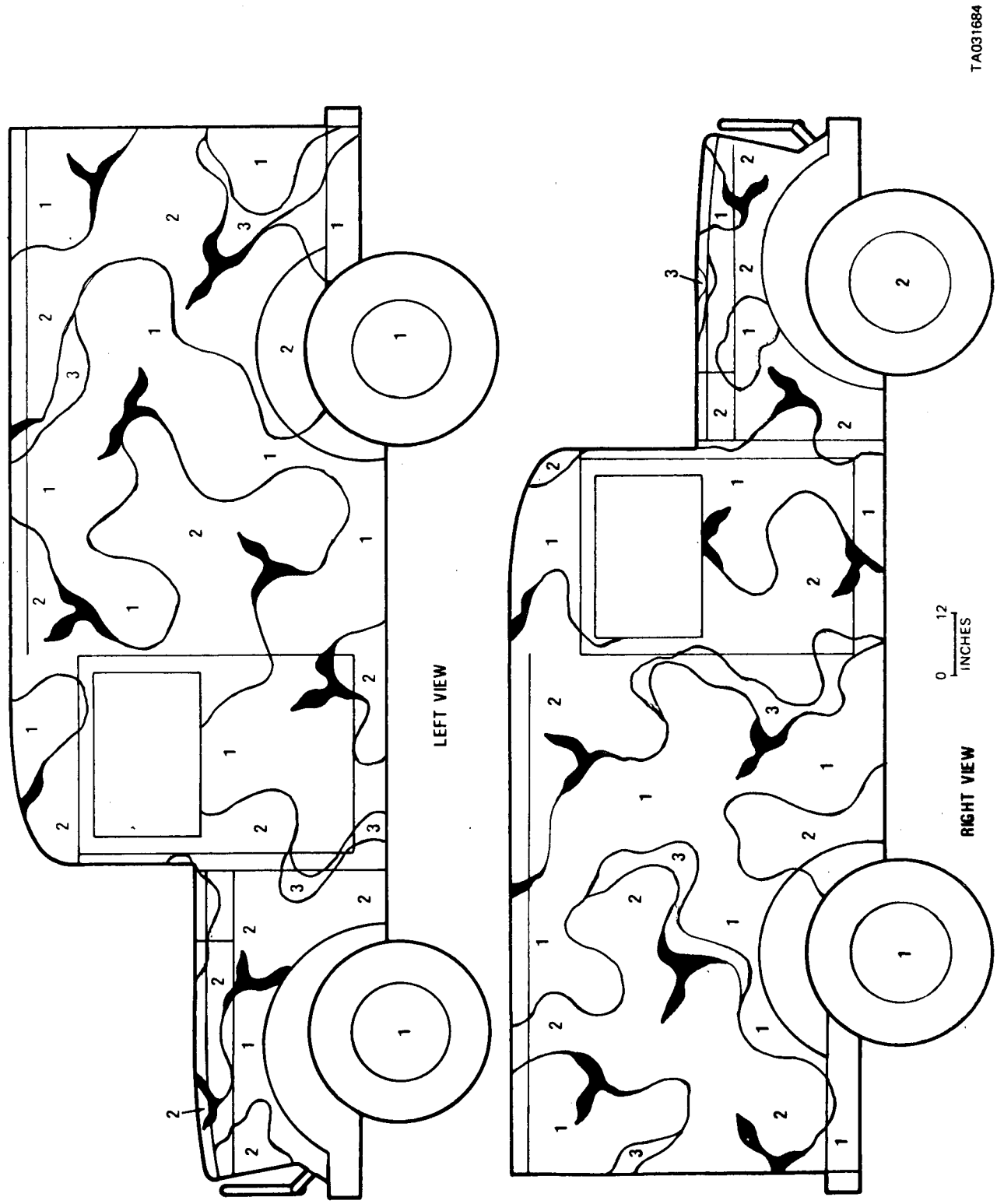

Figure 2-10. Truck, Ambulance: 1¼-Ton, M725. (Sheet 2 of 2).

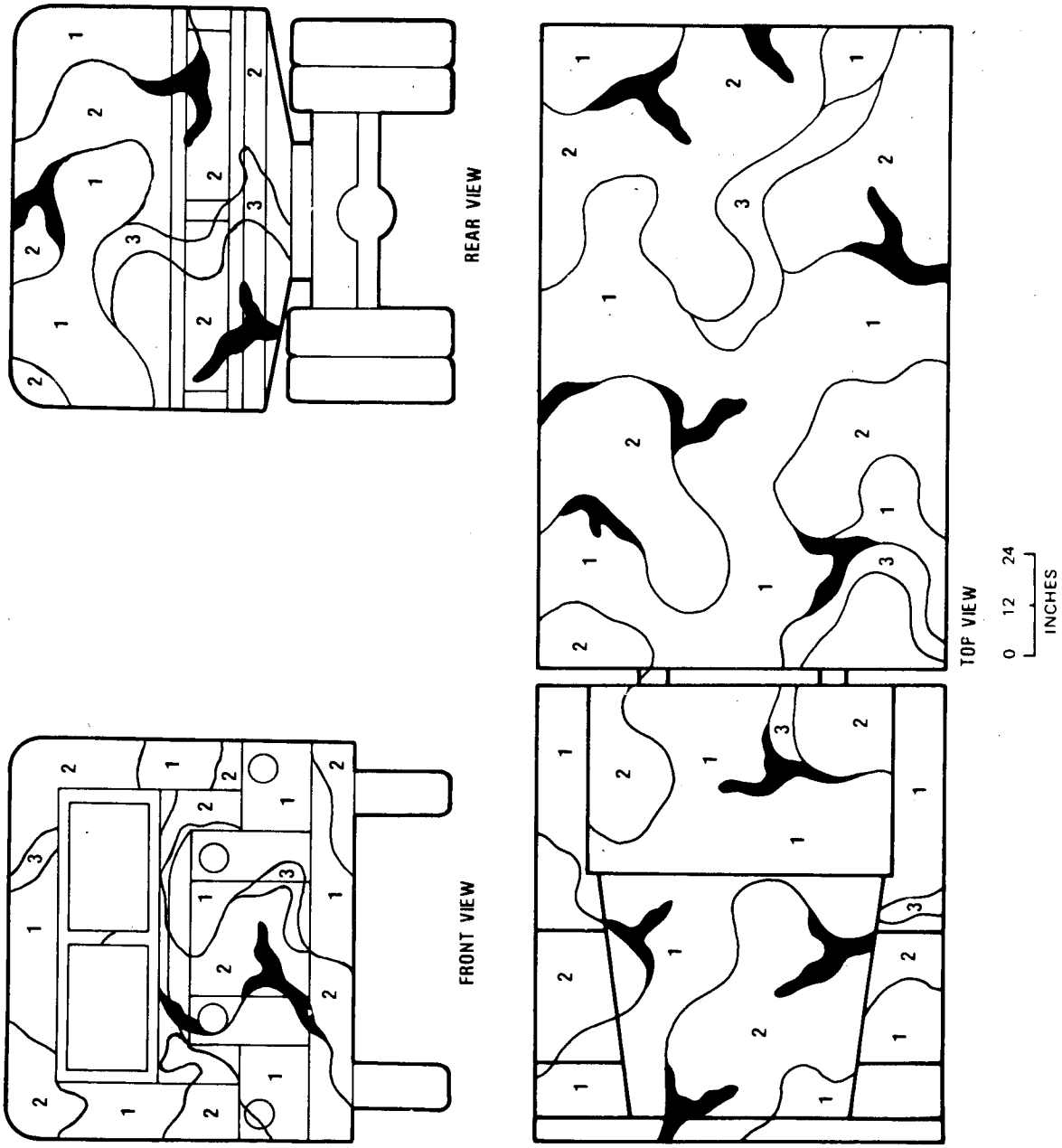

Figure 2-11. Truck, Cargo: 2½-Ton, M35A2. (Sheet 1 of 2).

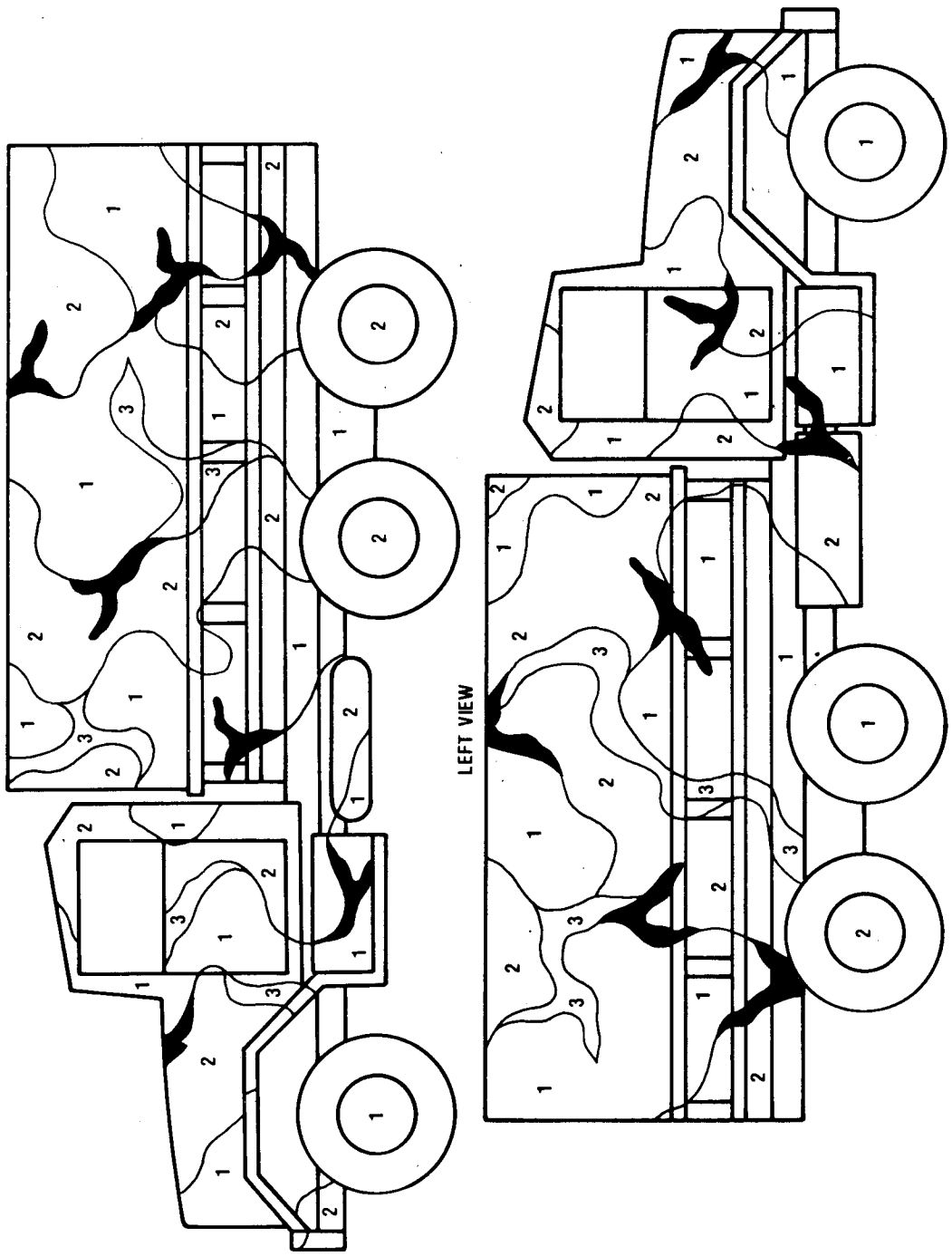

TA031806

Figure 2-11. Truck, Cargo: 2½-Ton, M35A2. (Sheet 2 of 2).

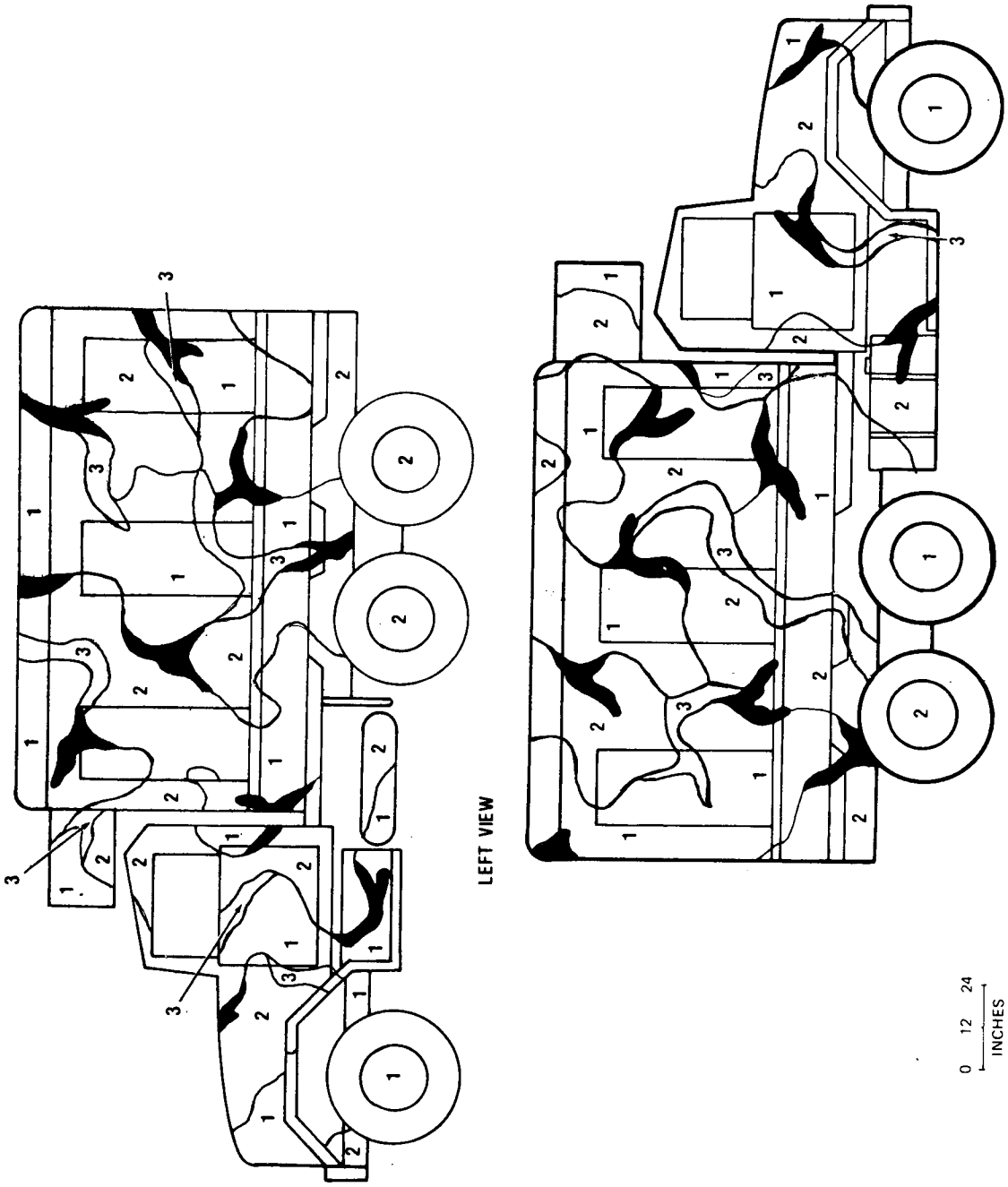

Figure 2-12. Instrument Repair Shop, Truck, Mounted: 2½-Ton, M185. (Sheet 1 of 2).

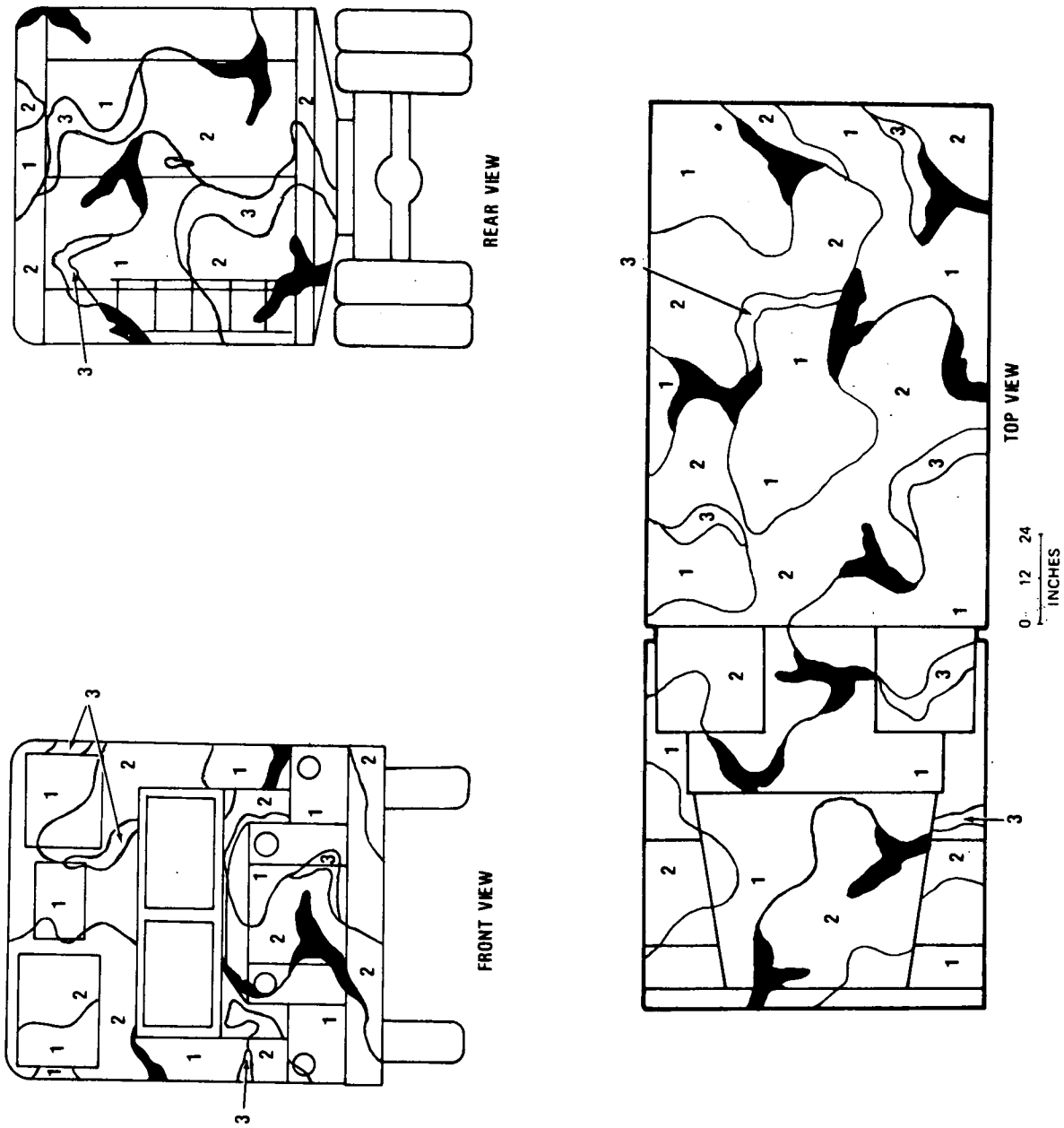

Figure 2-12. Instrument Repair Shop, Truck, Mounted: 2½-Ton, M185. (Sheet 2 of 2).

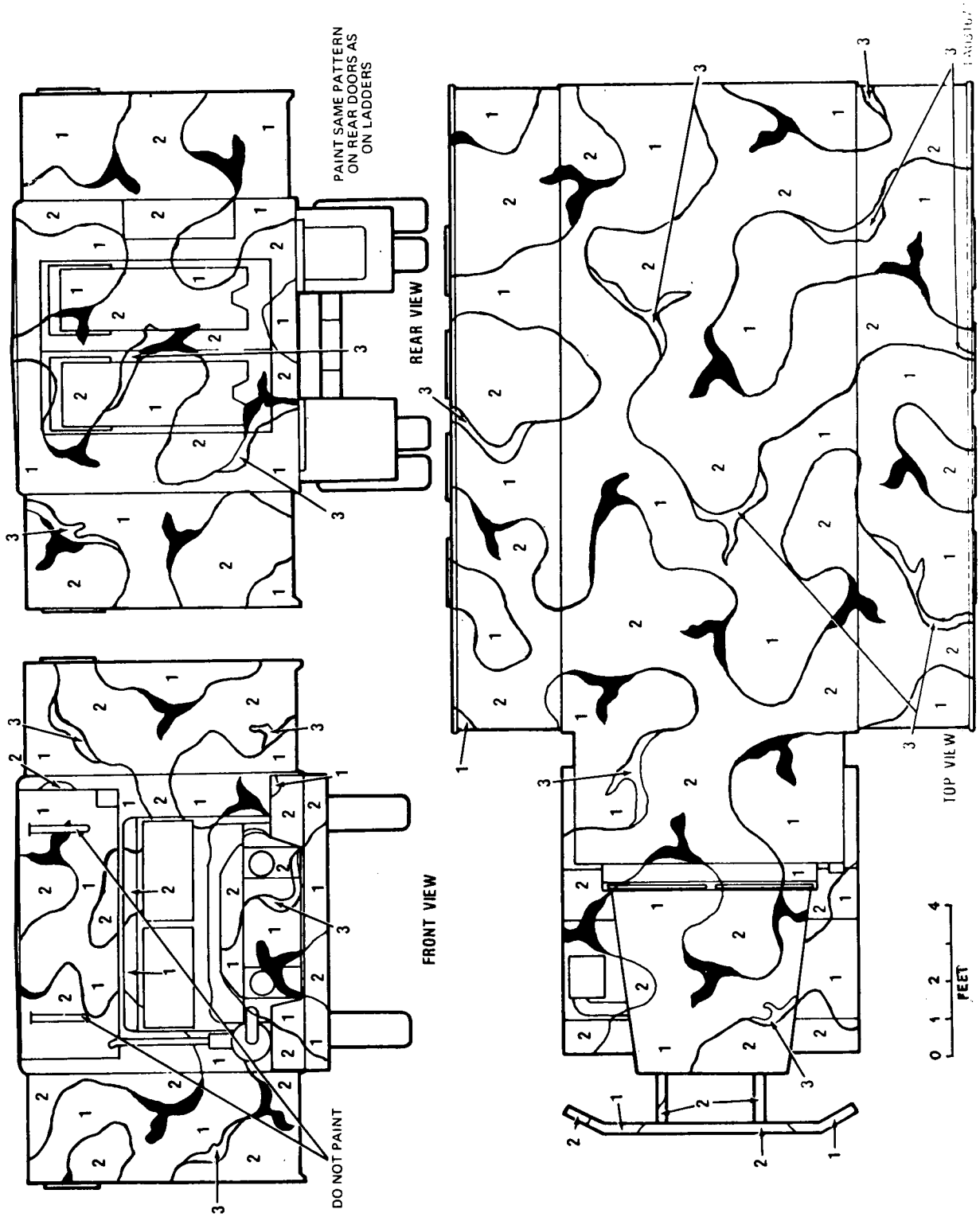

Figure 2-13. Truck, Van: Expansible, 2½-Ton, M292A2. (Sheet 1 of 2).

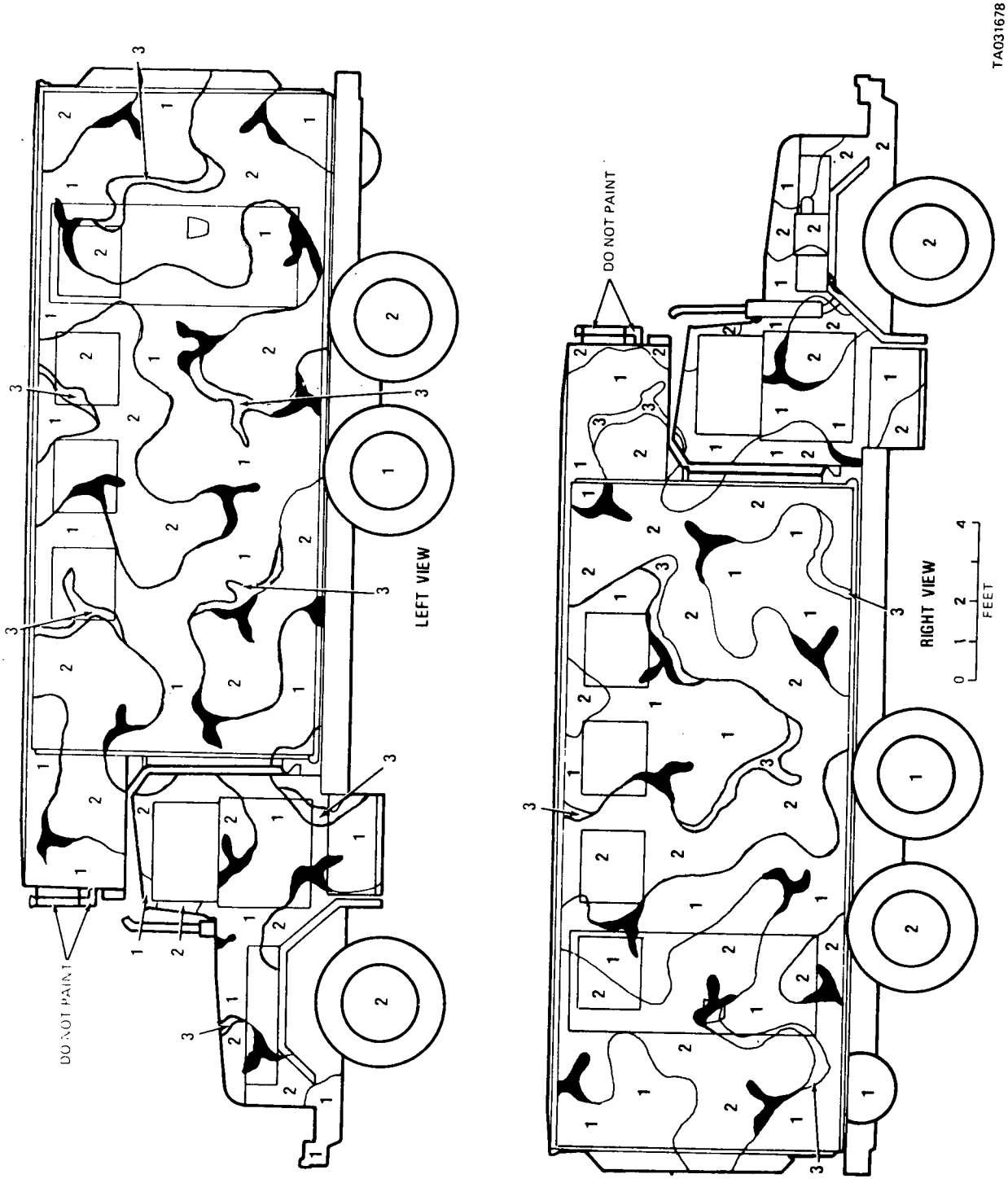

Figure 2-13. Truck, Van: Expansible, 2½-Ton, M292A2. (Sheet 2 of 2).

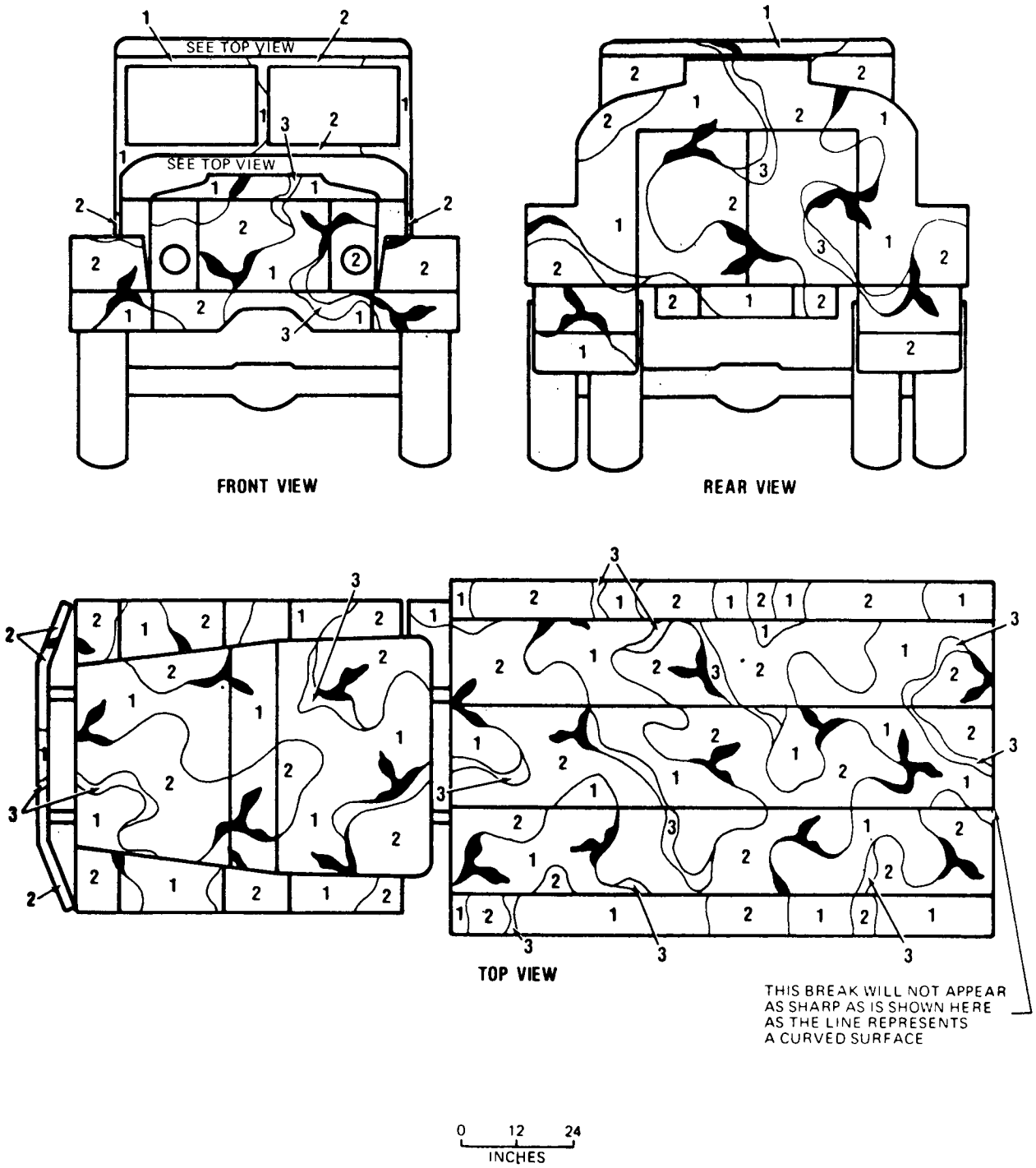

Figure 2-14. Truck, Tank: Fuel Servicing, 1200 Gal. 2½-Ton M49C. (Sheet 1 of 2).

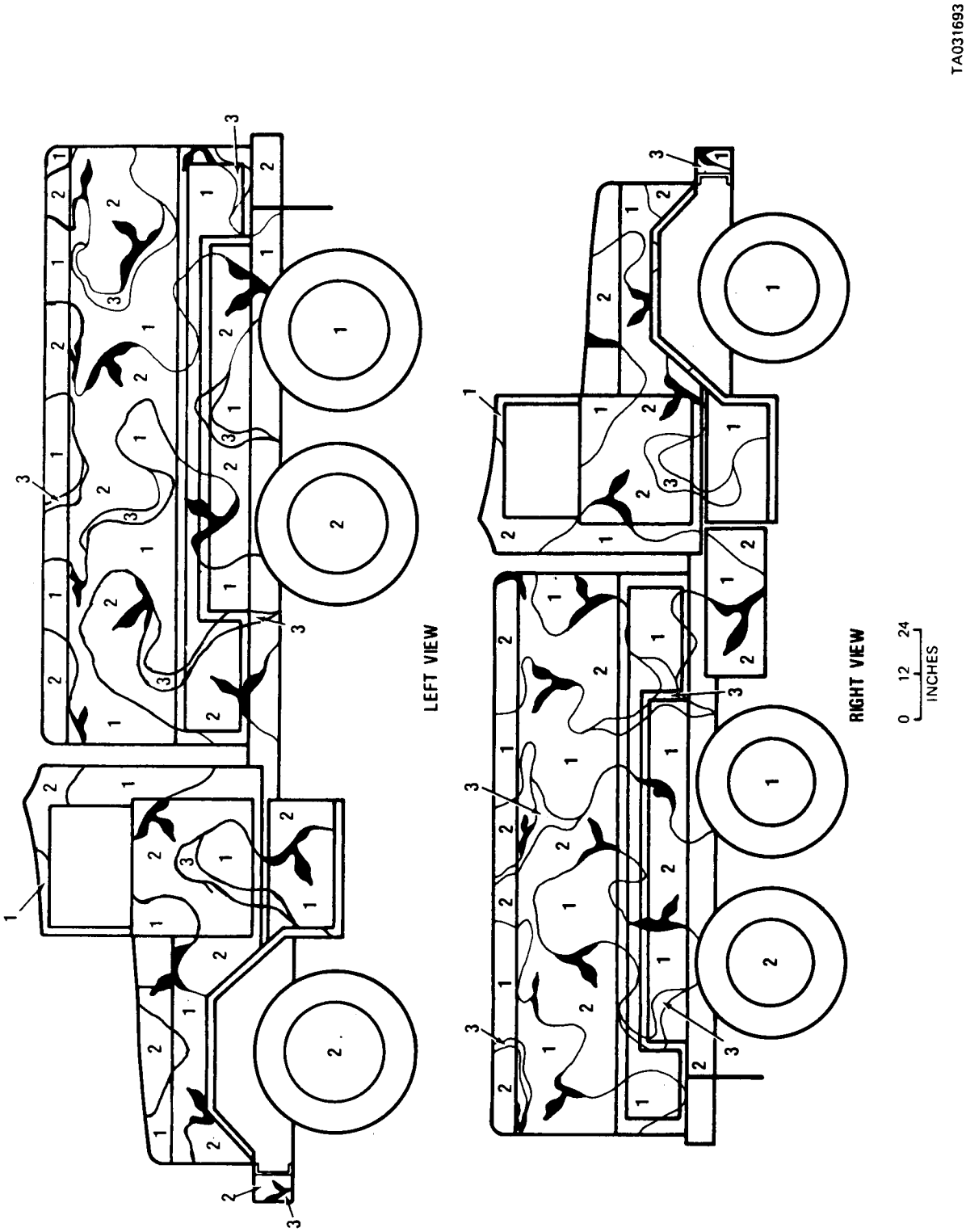

Figure 2-14. Truck, Tabk: Fuel Servicing, 1200 Gal. 2½-Ton M49C. (Sheet 2 of 2).

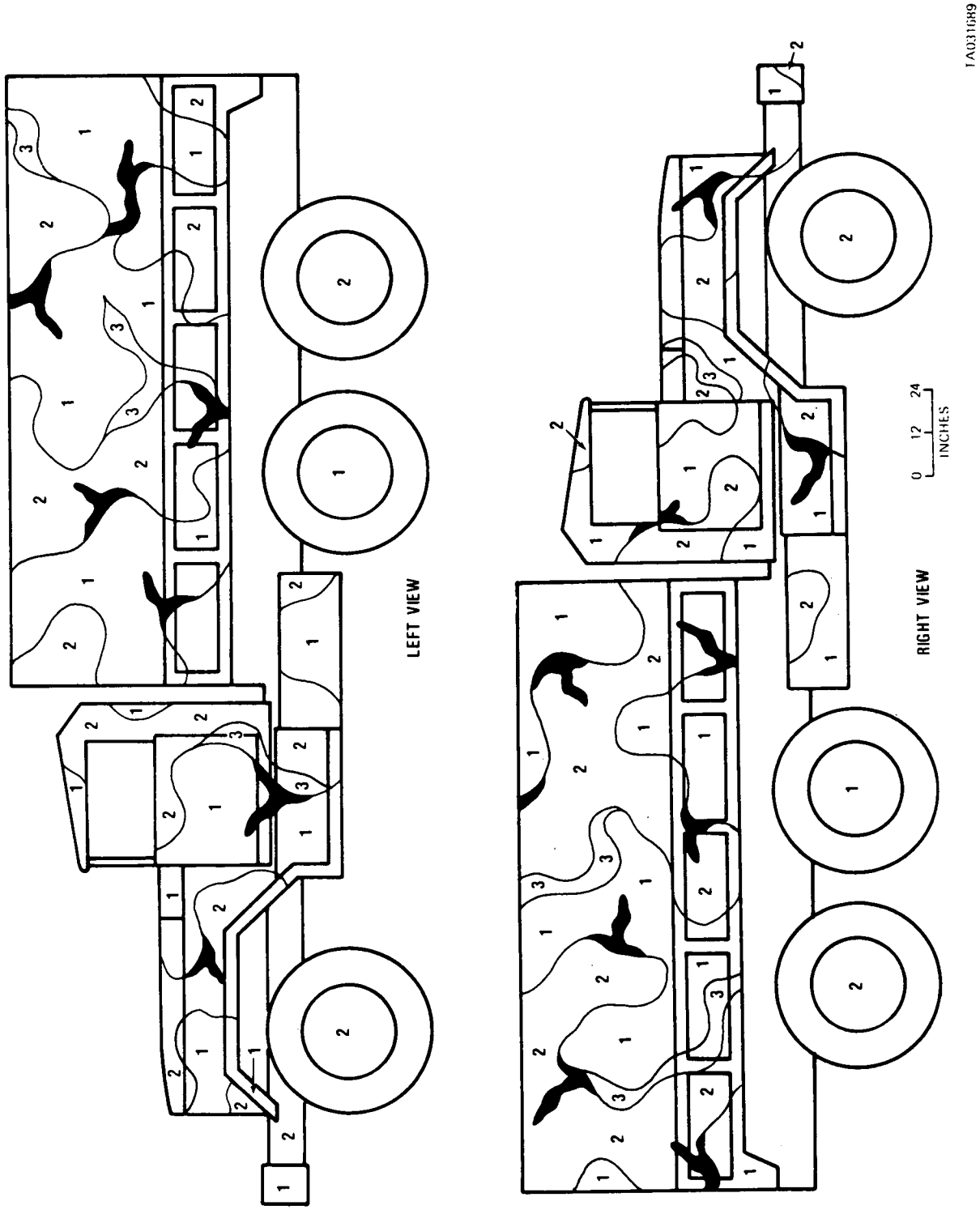

Figure 2-15. Truck, Cargo: 5-Ton, M54. (Sheet 1 of 3).

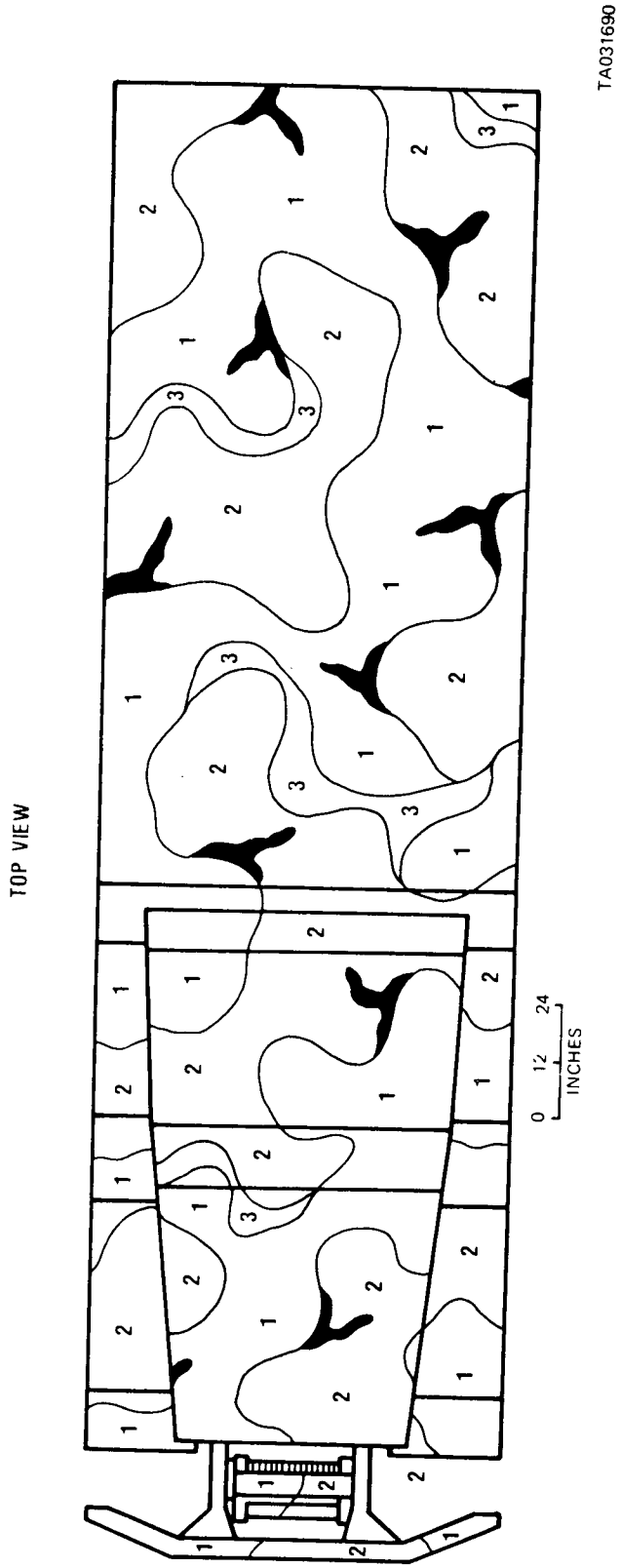

Figure 2-15. Truck, Cargo: 5-Ton, M54. (Sheet 2 of 3).

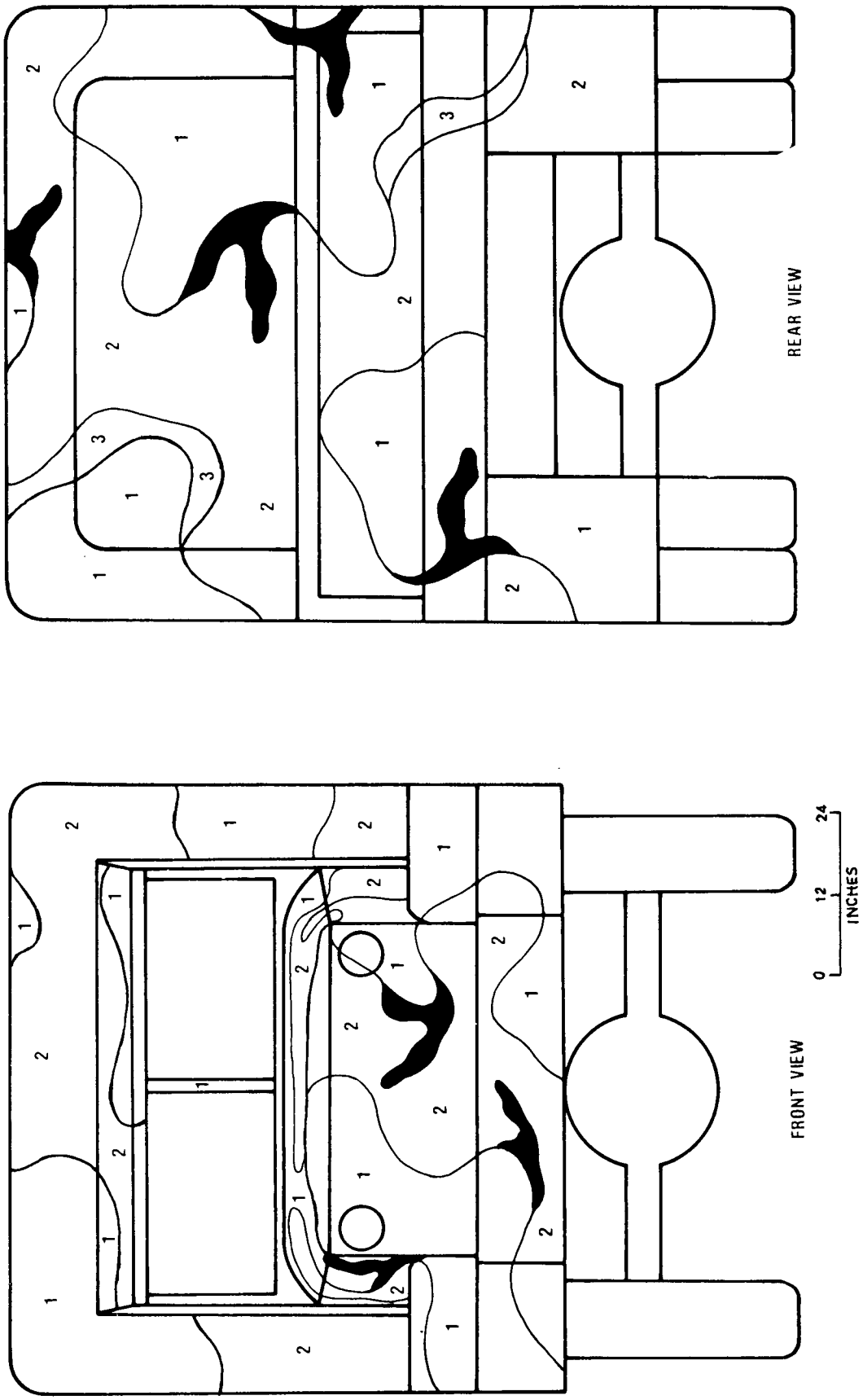

Figure 2-15. Truck, Cargo: 5-Ton, M54. (Sheet 3 of 3).

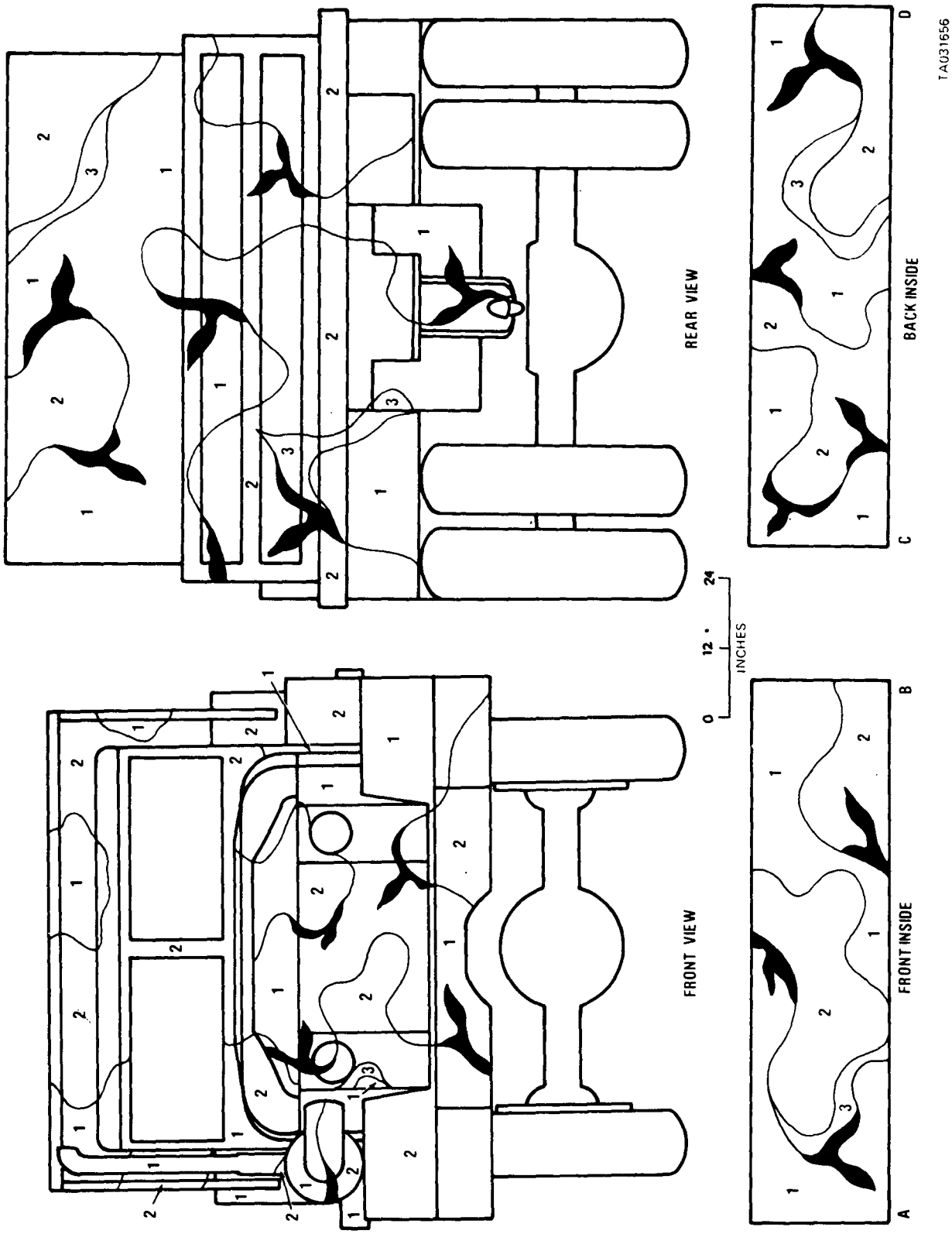

Figure 2-16. Truck, Dump: 5-Ton, M51 (Sheet 1 of 2).

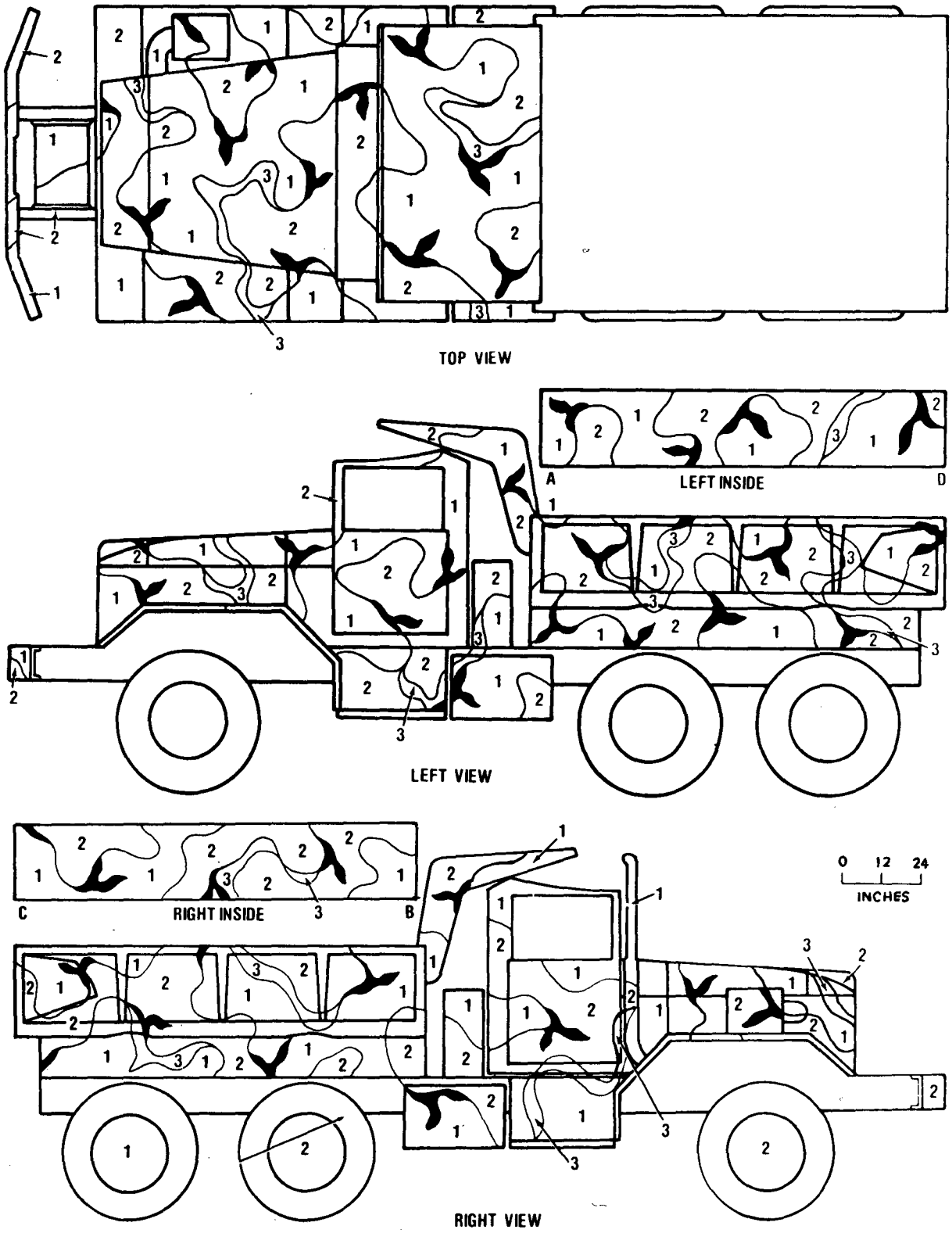

Figure 2-16. Truck, Dump: 5-Ton, M51 (Sheet 2 of 2).

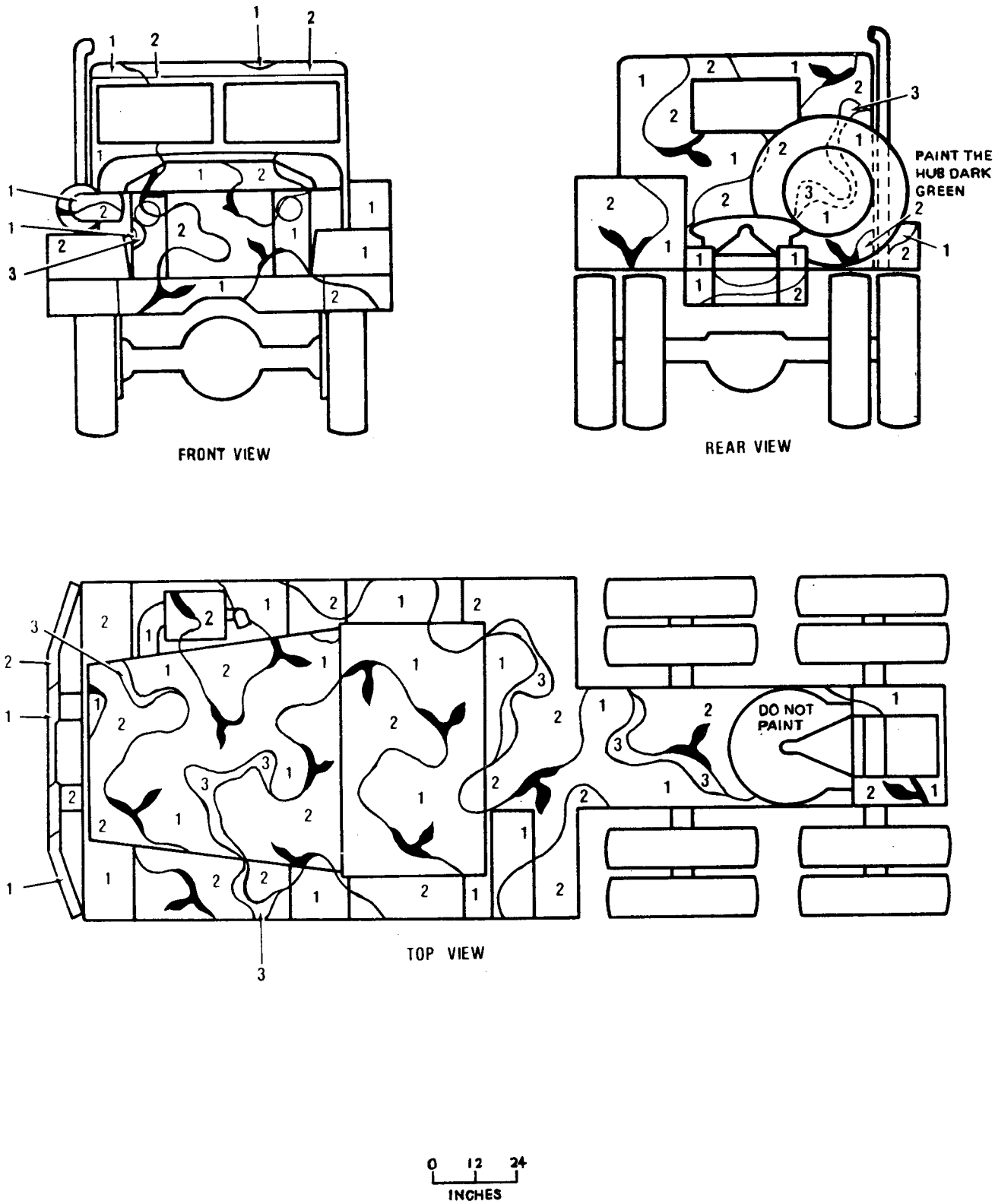

Figure 2-17. Truck, Tractor: 10-Ton M123E2. Truck, Tractor: 5-Ton, M52A2 (Sheet 1 of 2)

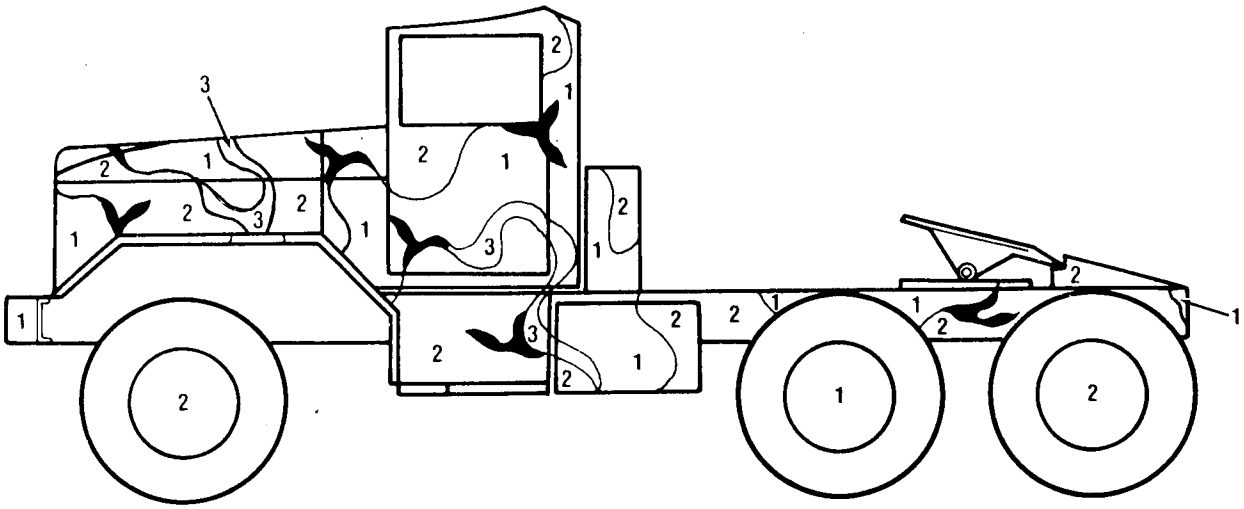

LEFT VIEW

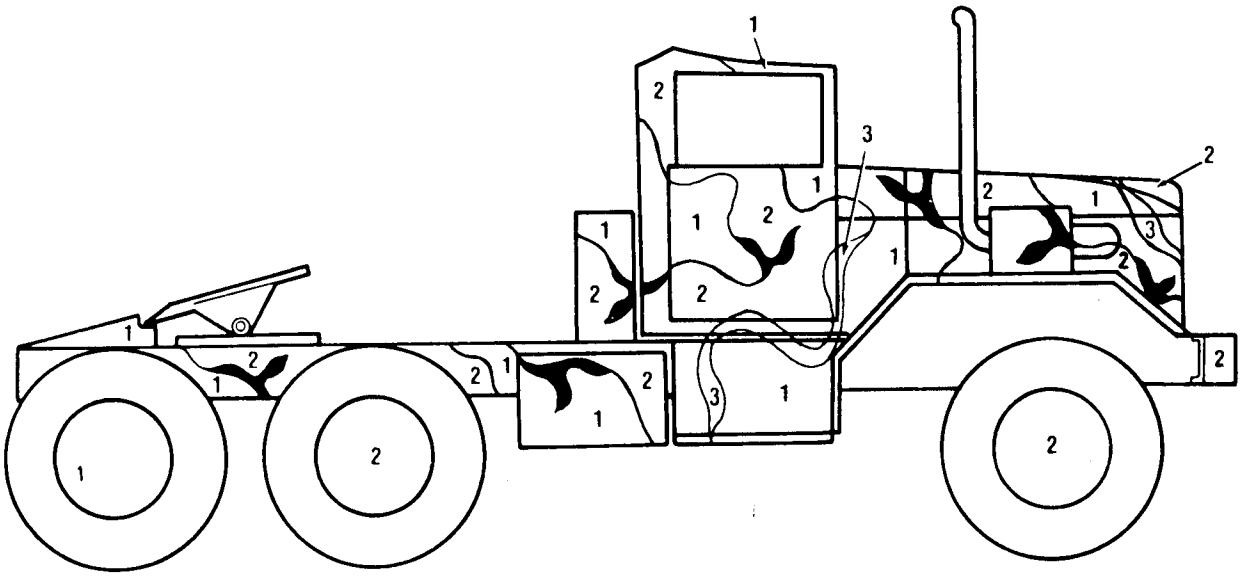

RIGHT VIEW

0 12 24
INCHES

TA031772

Figure 2-17. Truck, Tractor: 10-Ton M123E2. Truck, Tractor: 5-Ton, M52A2 (Sheet 2 of 2)

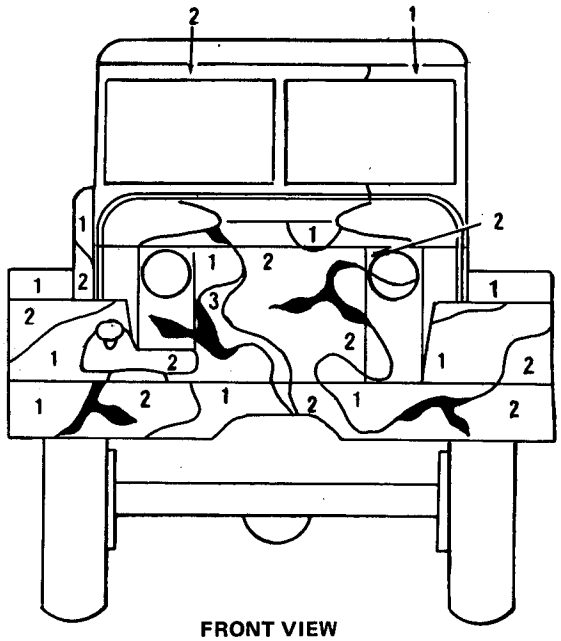

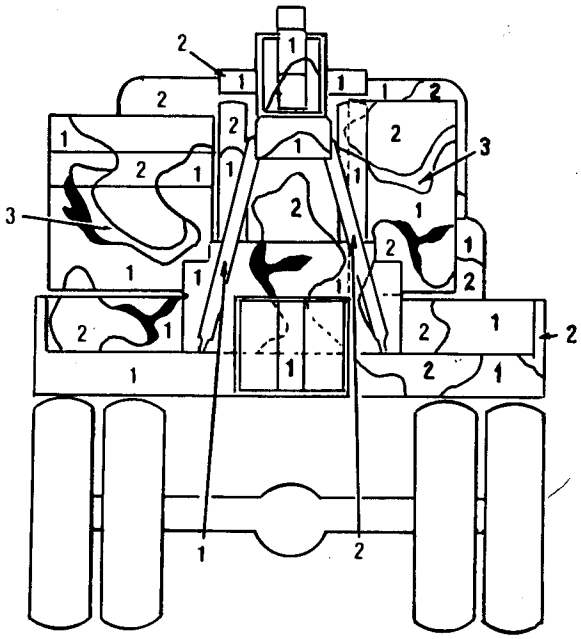

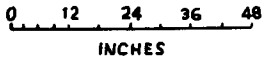

Figure 2-18. Truck, Wrecker, Medium: 5-Ton, M543. (Sheet 1 of 2).

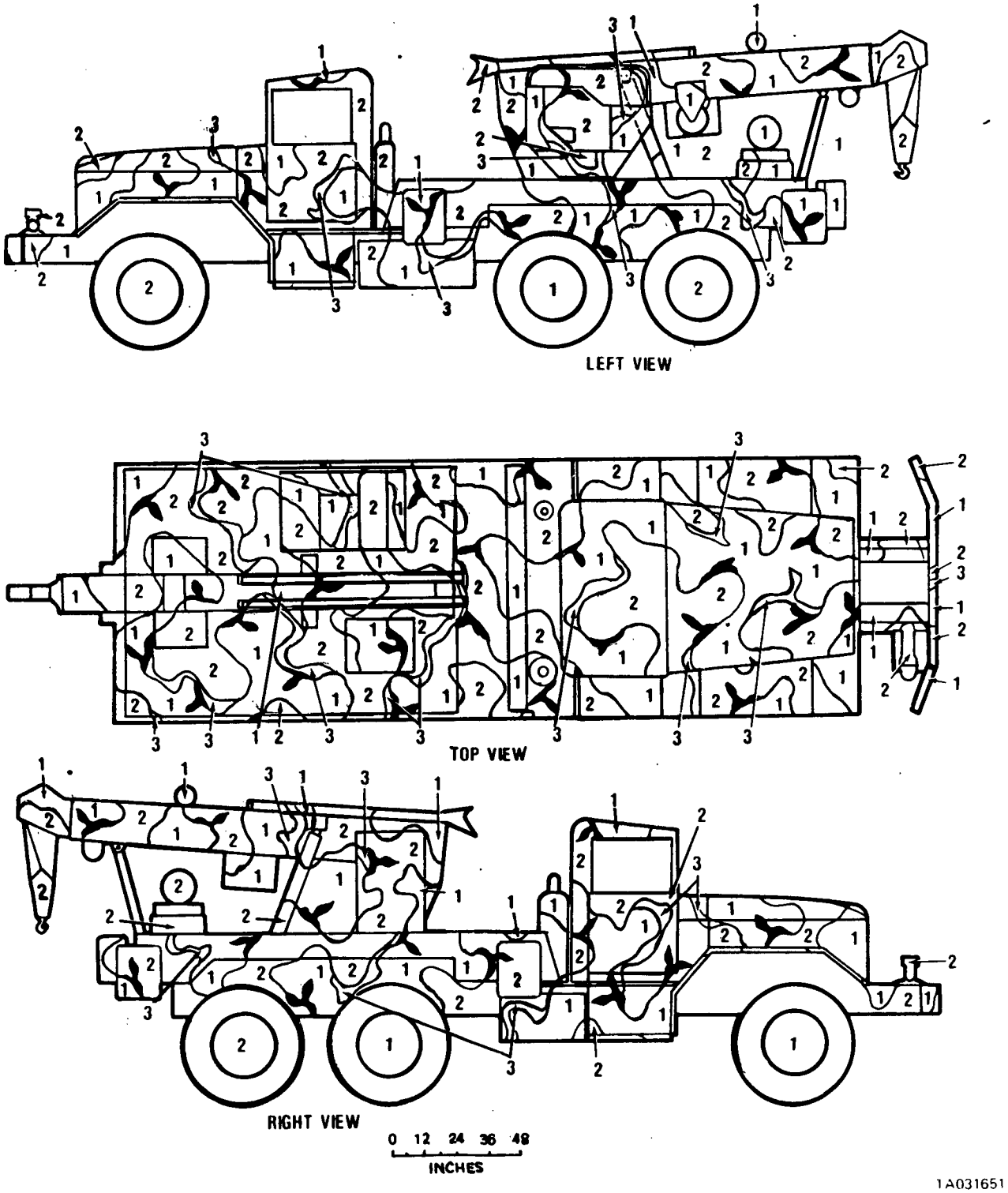

Figure 2-18. Truck, Wrecker, Medium: 5-Ton, M543. (Sheet 2 of 2).

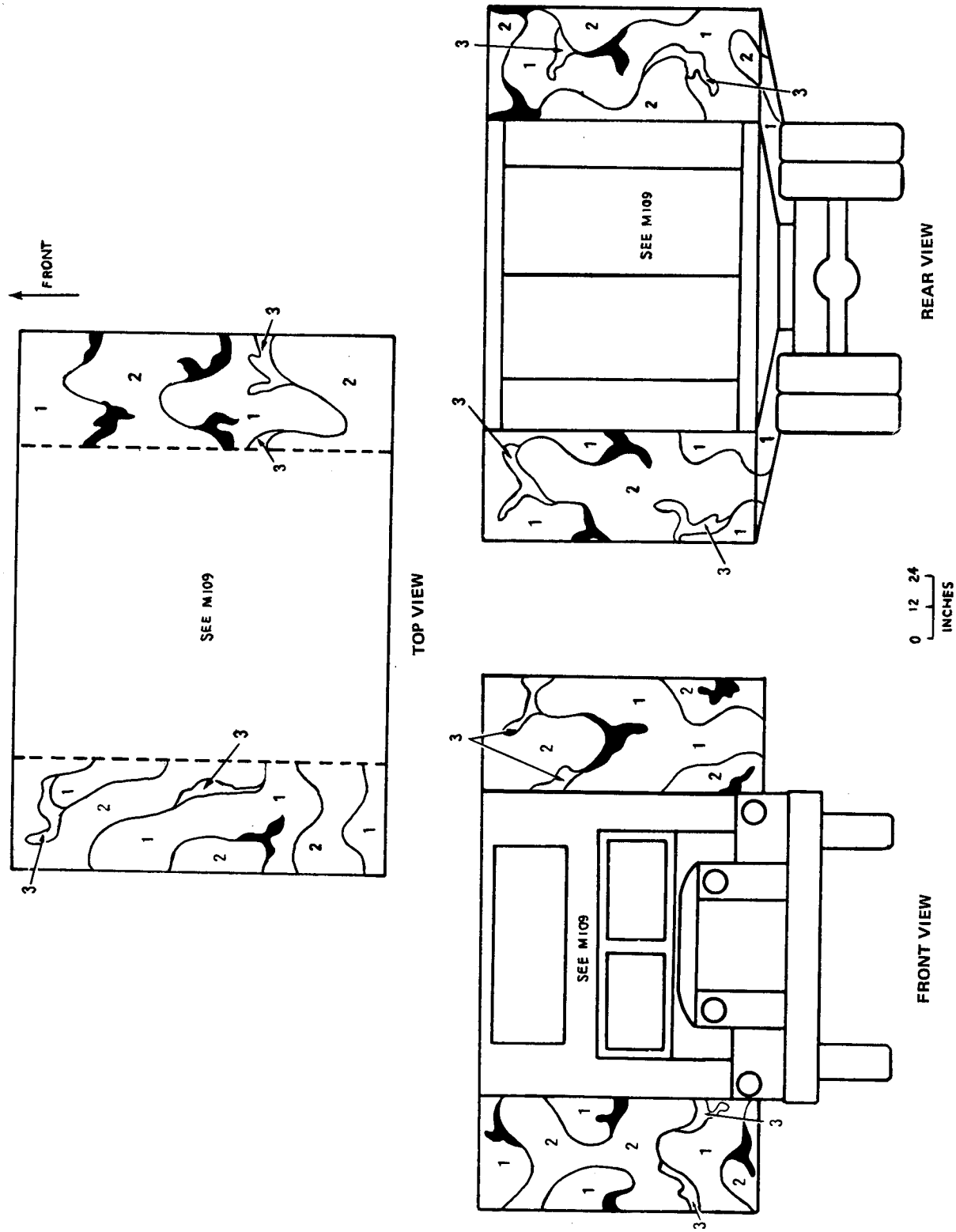

Figure 2-19. Truck, Van, Expansible: 5-Ton, M291.

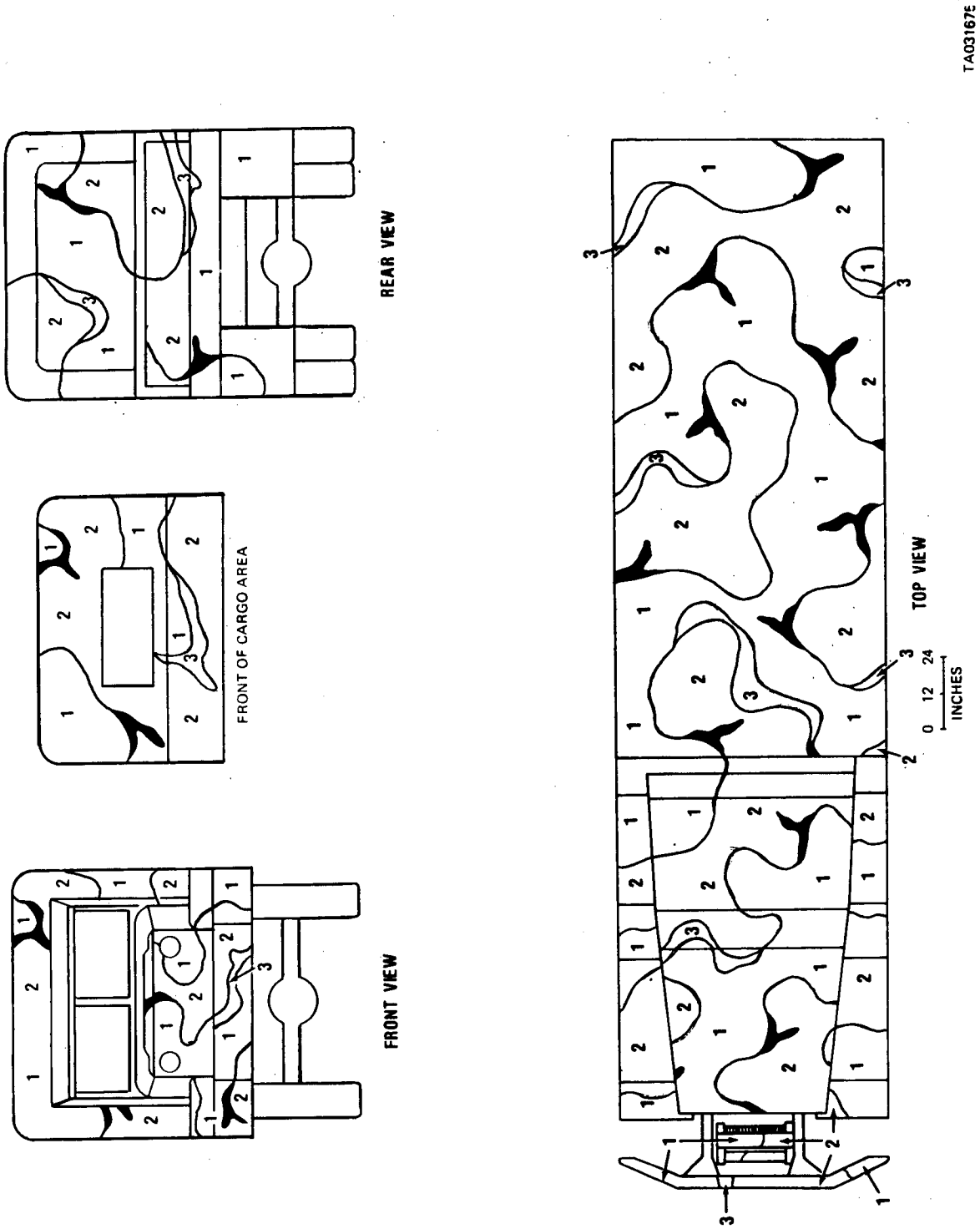

Figure 2-20. Truck, Cargo: 5-Ton, M55. (Sheet 1 of 2).

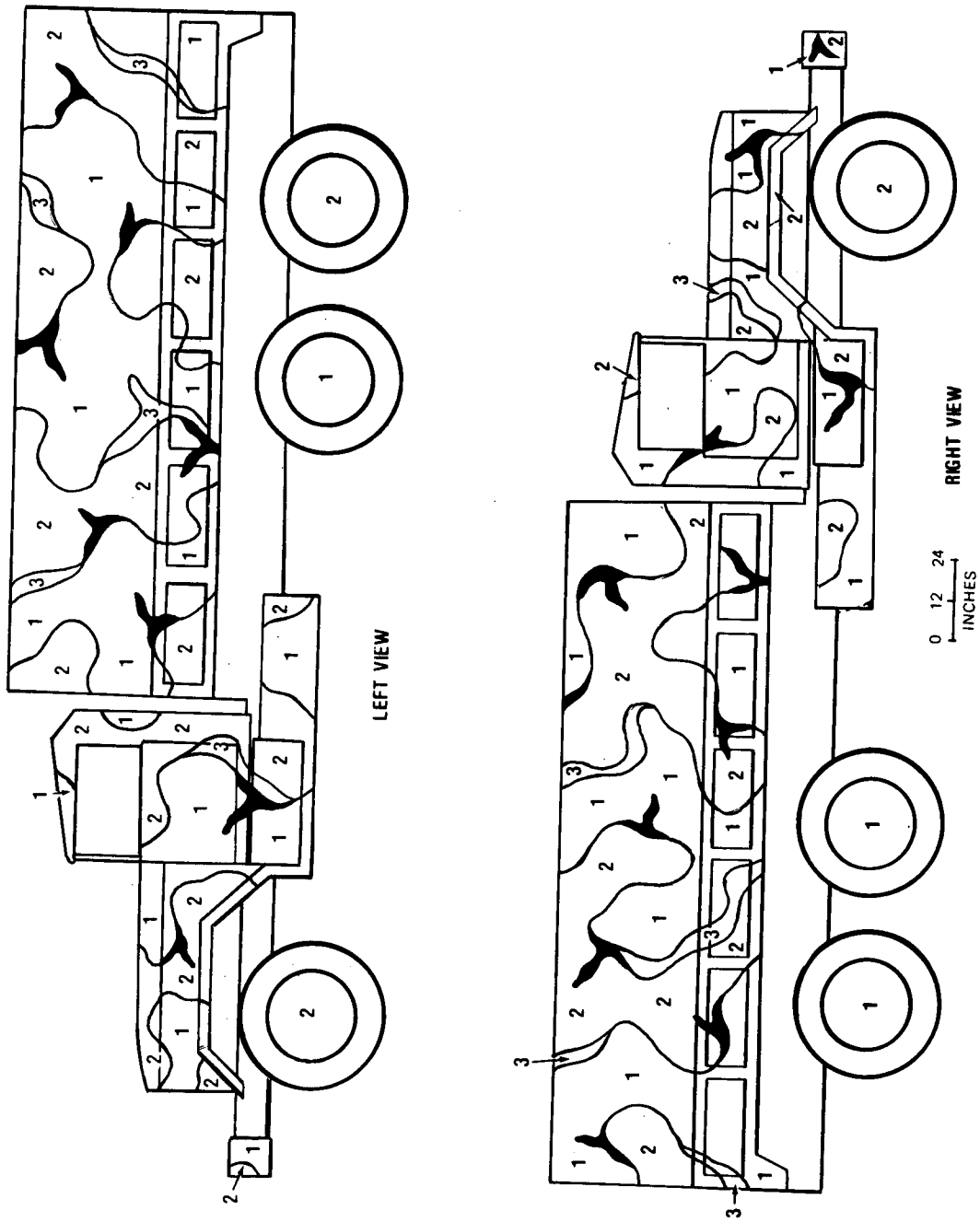

Figure 2-20. Truck, Cargo: 5-Ton, M55. (Sheet 2 of 2).

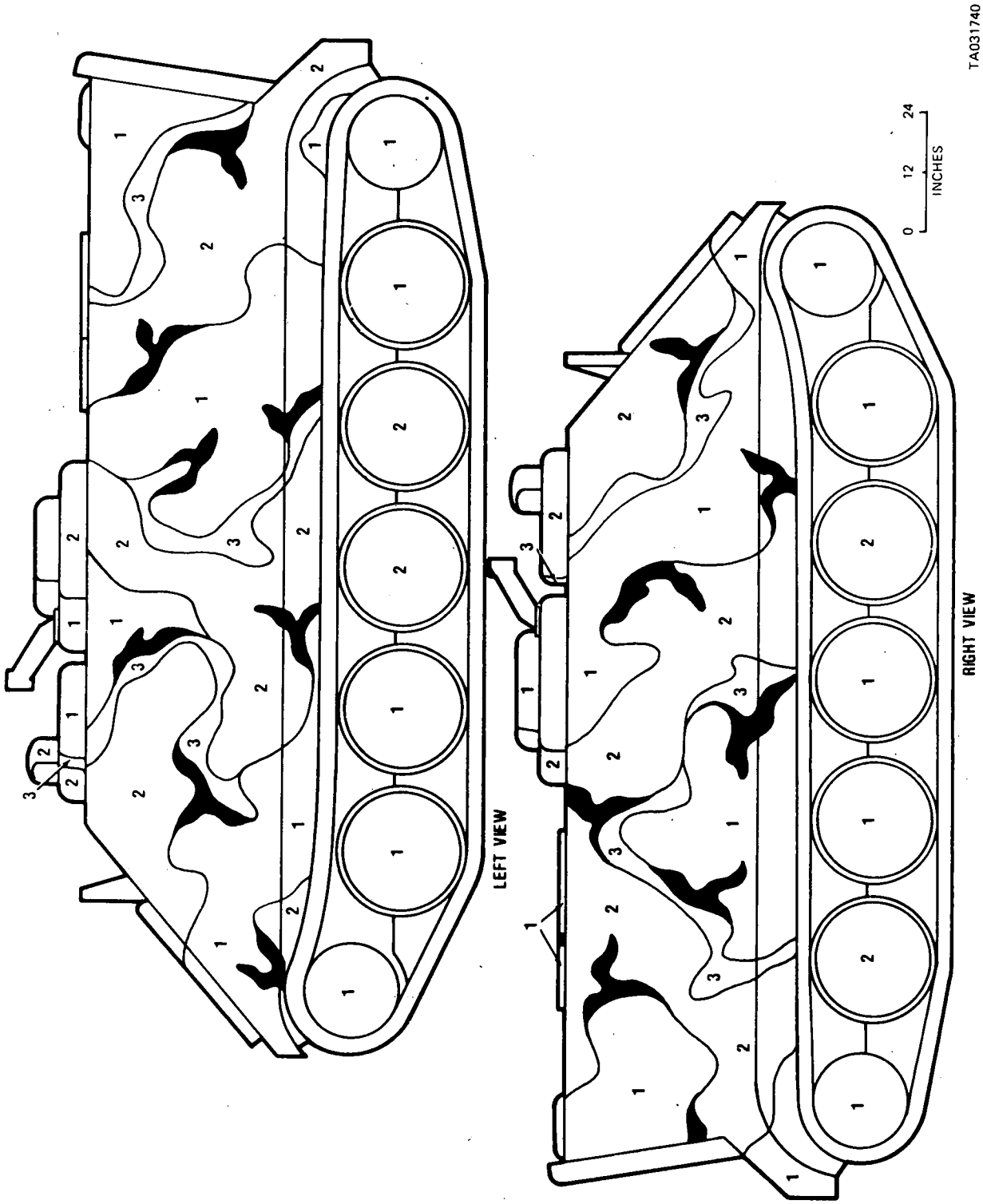

Figure 2-21. Carrier Personnel, Full-Tracked, Armored: M113 (See M125, Mortar, 81 MM, M106 Carrier Mortar). (Sheet 1 of 2).

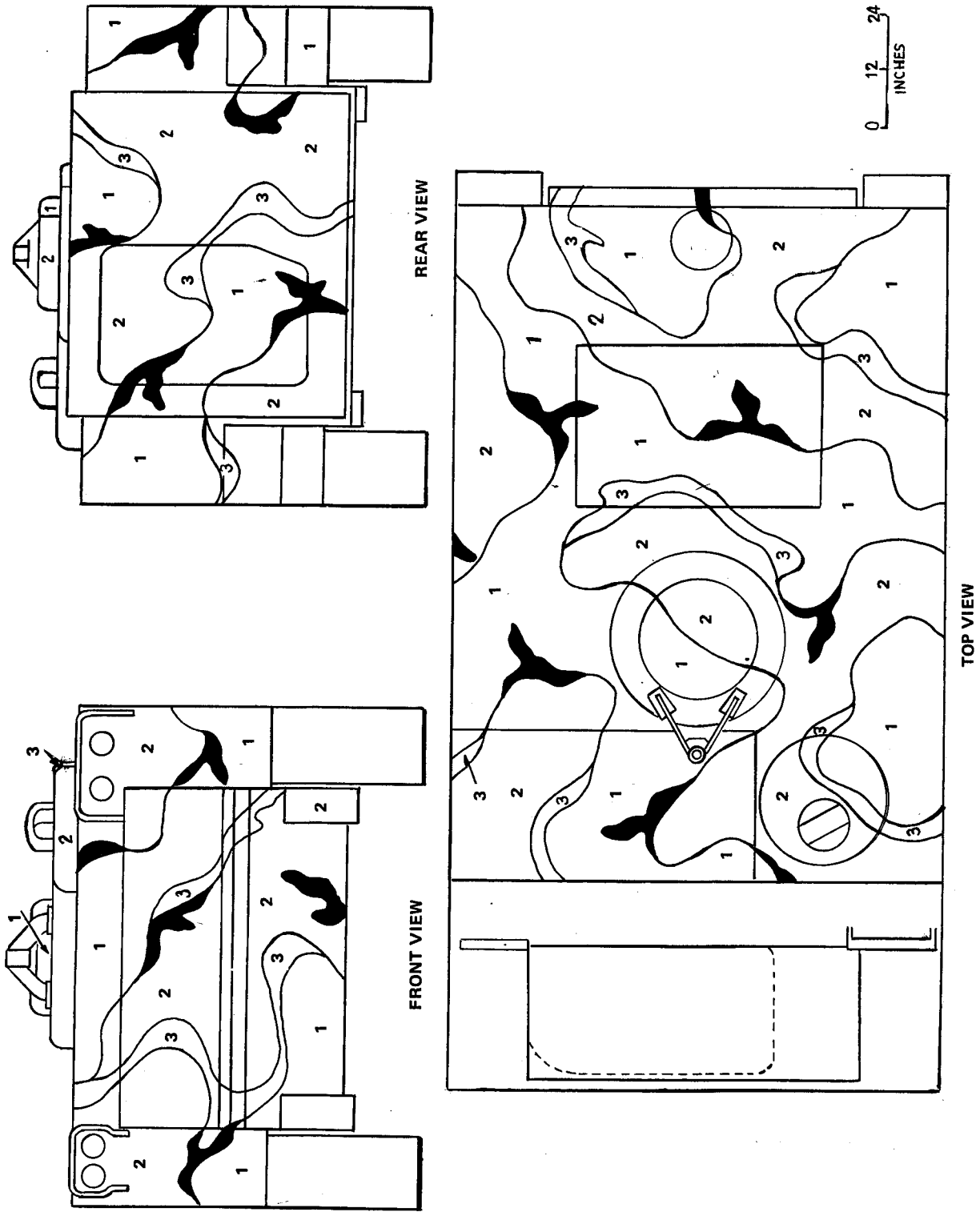

Figure 2-21. Carrier Personnel, Full-Tracked, Armored: M113 (See M125, Mortar, 81 MM, M106 Carrier Mortar). (Sheet 2 of 2).

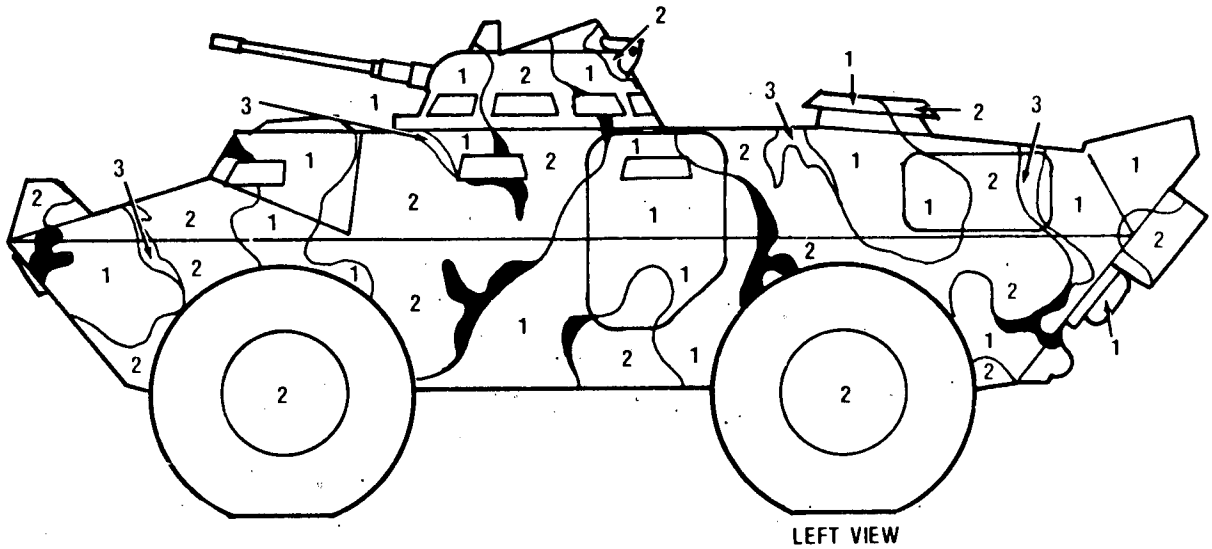

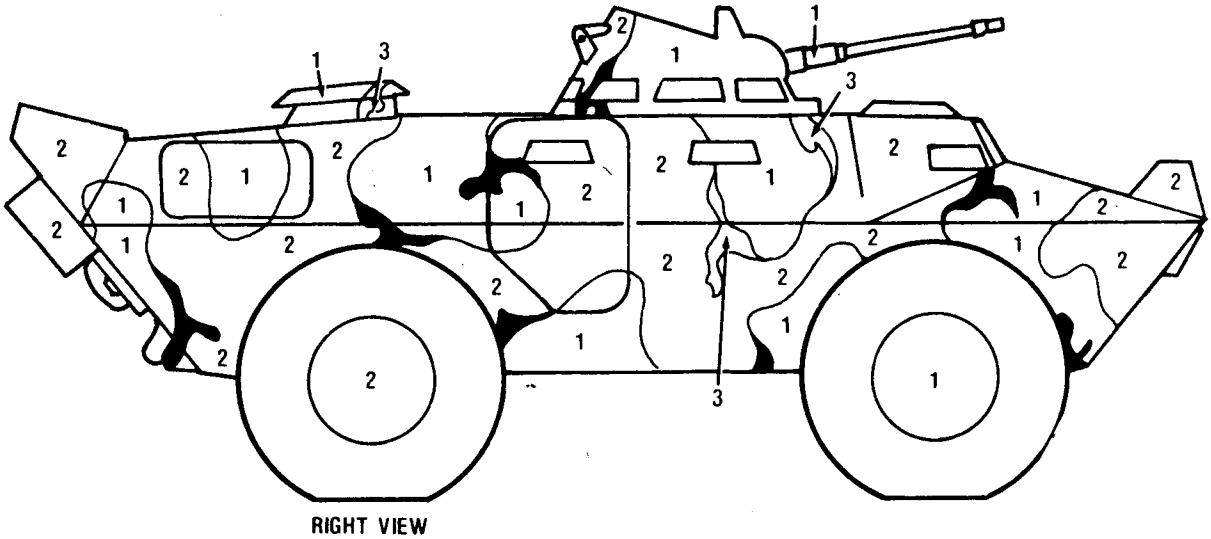

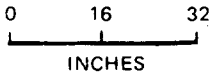

Figure 2-22. Commando Vehicle W/50 Caliber Machine Gun: M706E1. (Sheet 1 of 2).

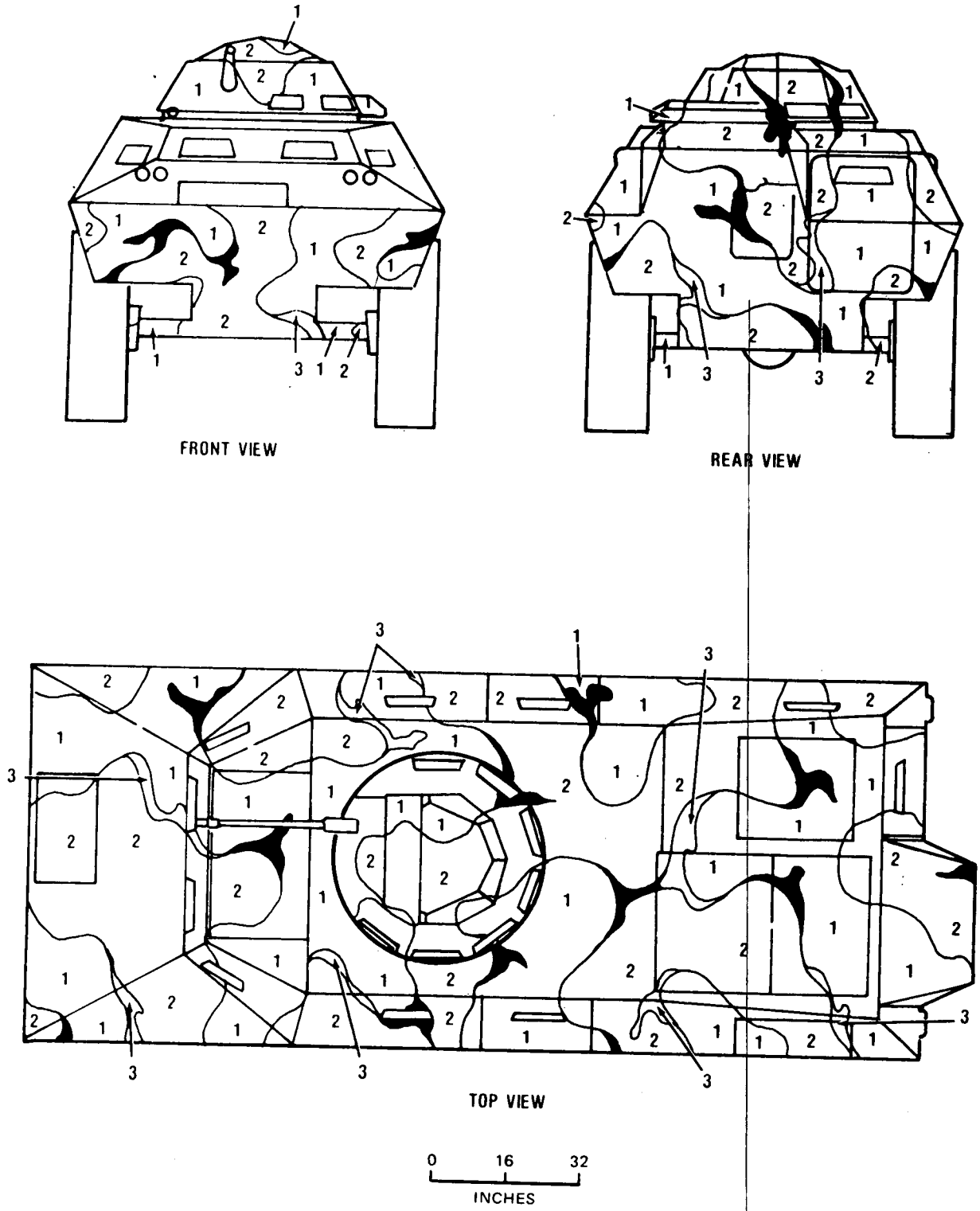

Figure 2-22. Commando Vehicle W/50 Caliber Machine Gun: M706E1. (Sheet 2 of 2).

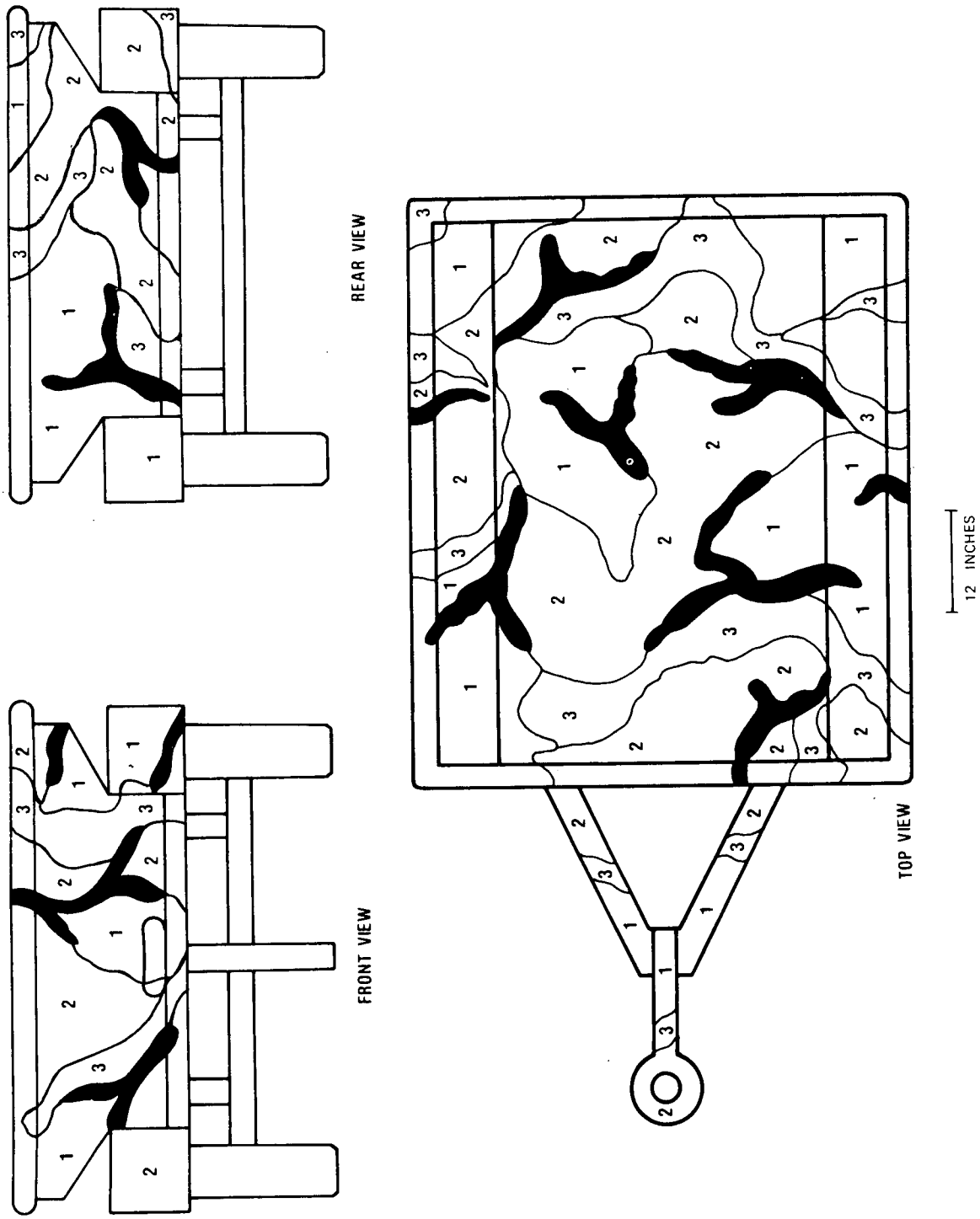

Figure 2-23. Trailer, Cargo, ¼-Ton, 2-Wheel, XM416. (Sheet 1 of 2).

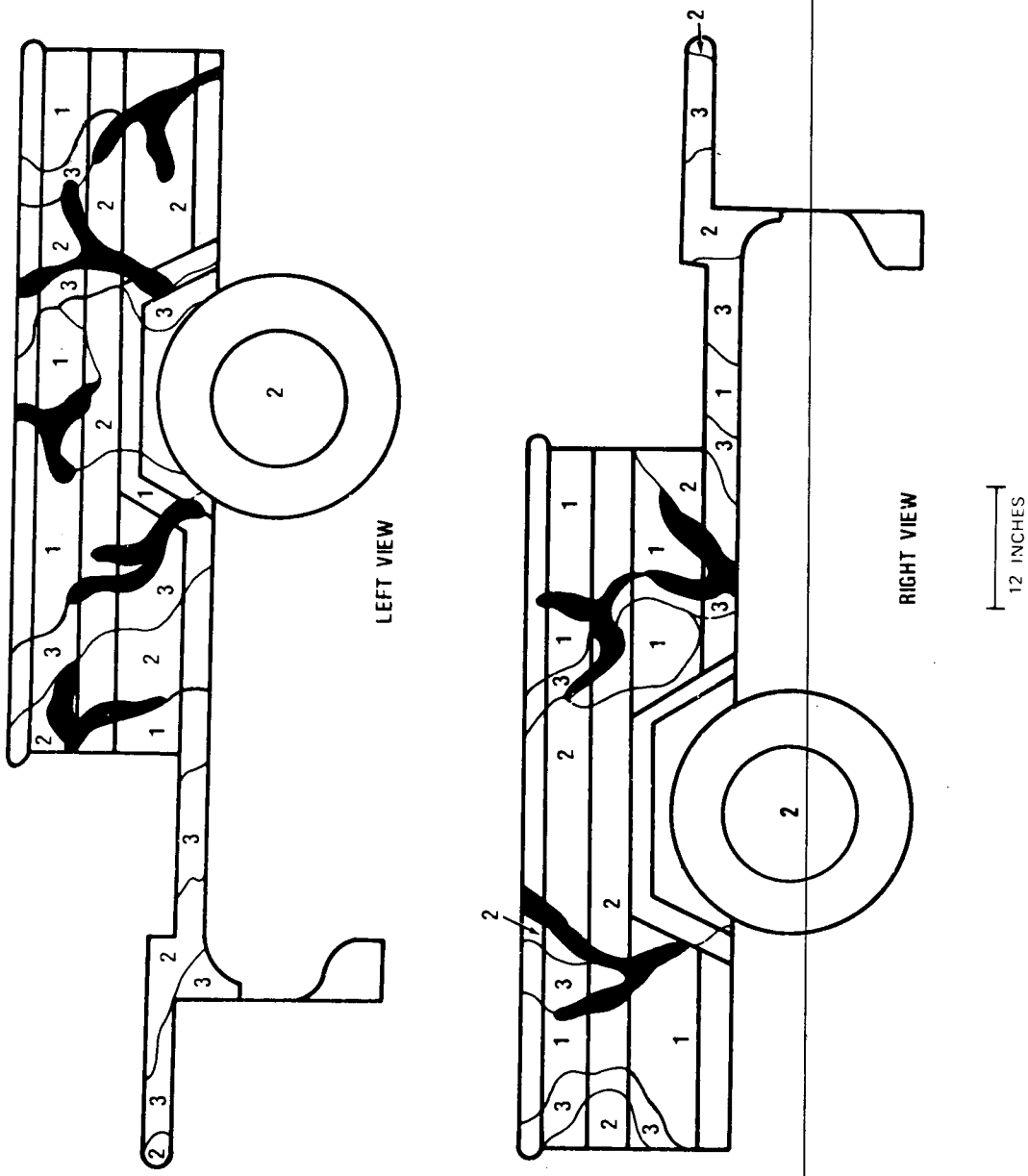

Figure 2-23. Trailer, Cargo, ¼-Ton, 2-Wheel, XM416. (Sheet 2 of 2).

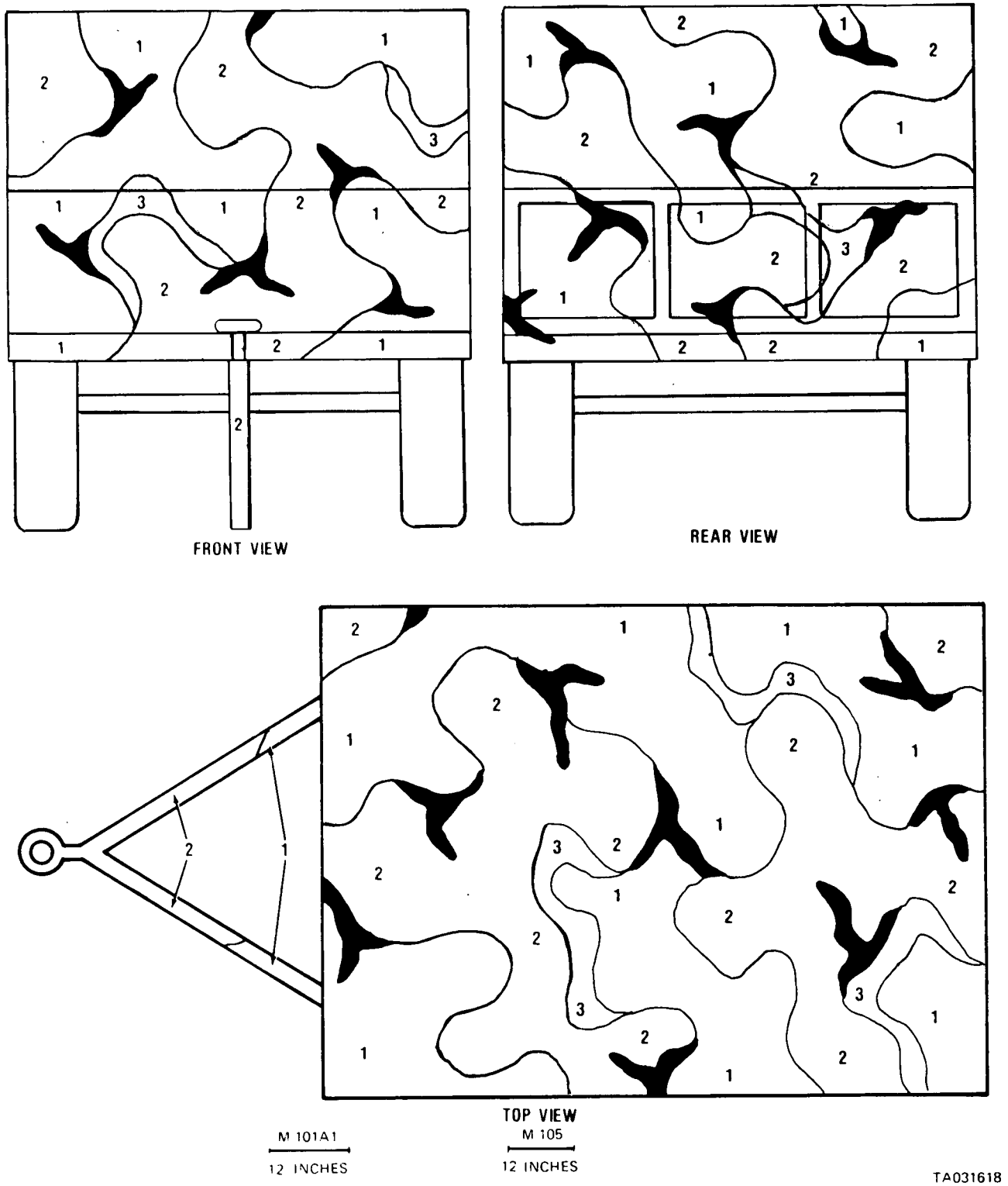

Figure 2-24. Trailer, Cargo: ¾-Ton, 2-Wheel M101A1. Trailer, Cargo: 1½-Ton, 2-Wheel M105 (See M101A1). (Sheet 1 of 2).

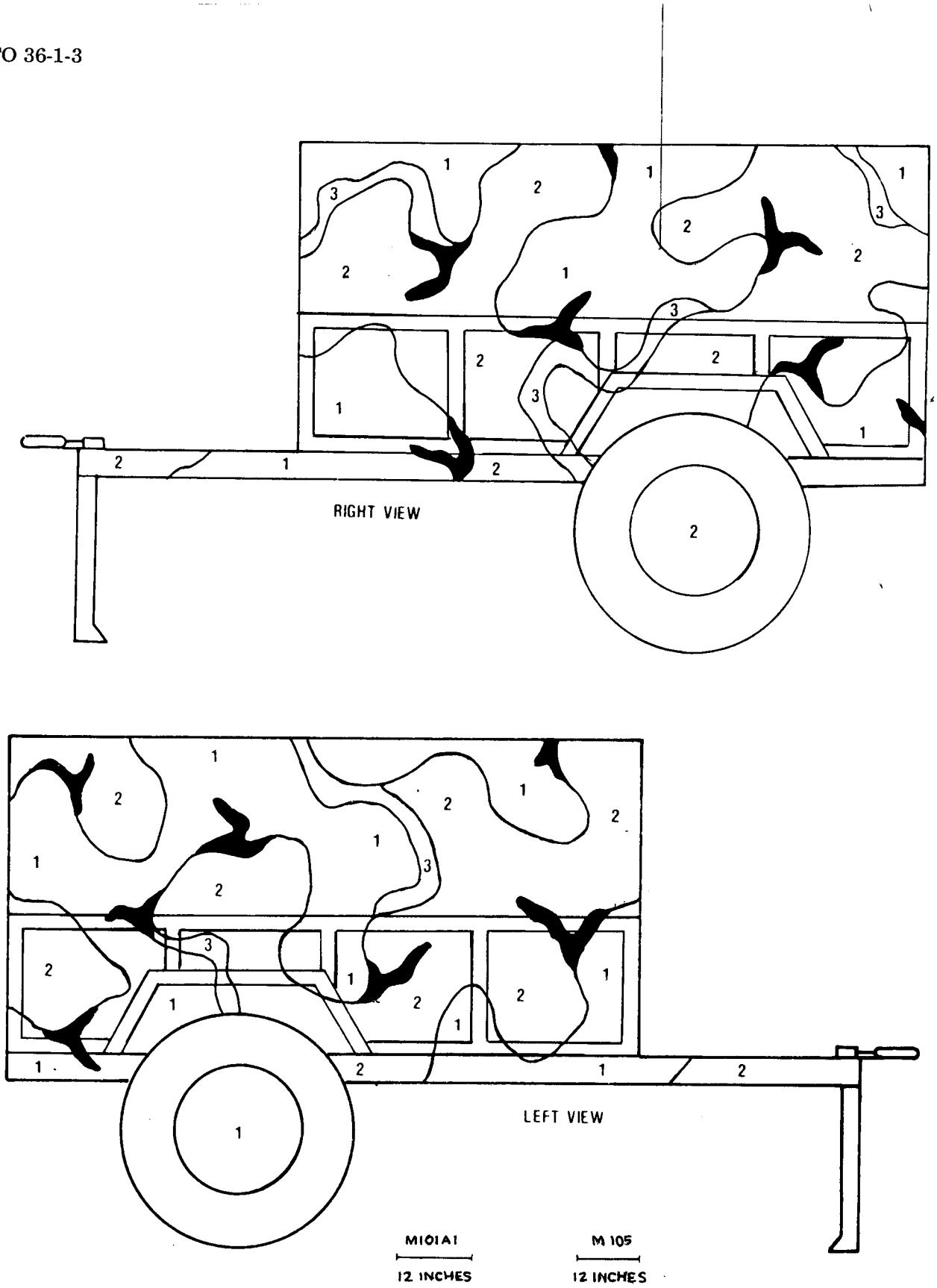

Figure 2-24. Trailer, Cargo: ¾-Ton, 2-Wheel M101A1. Trailer, Cargo: 1½-Ton, 2-Wheel M105 (See M101A1). (Sheet 2 of 2).

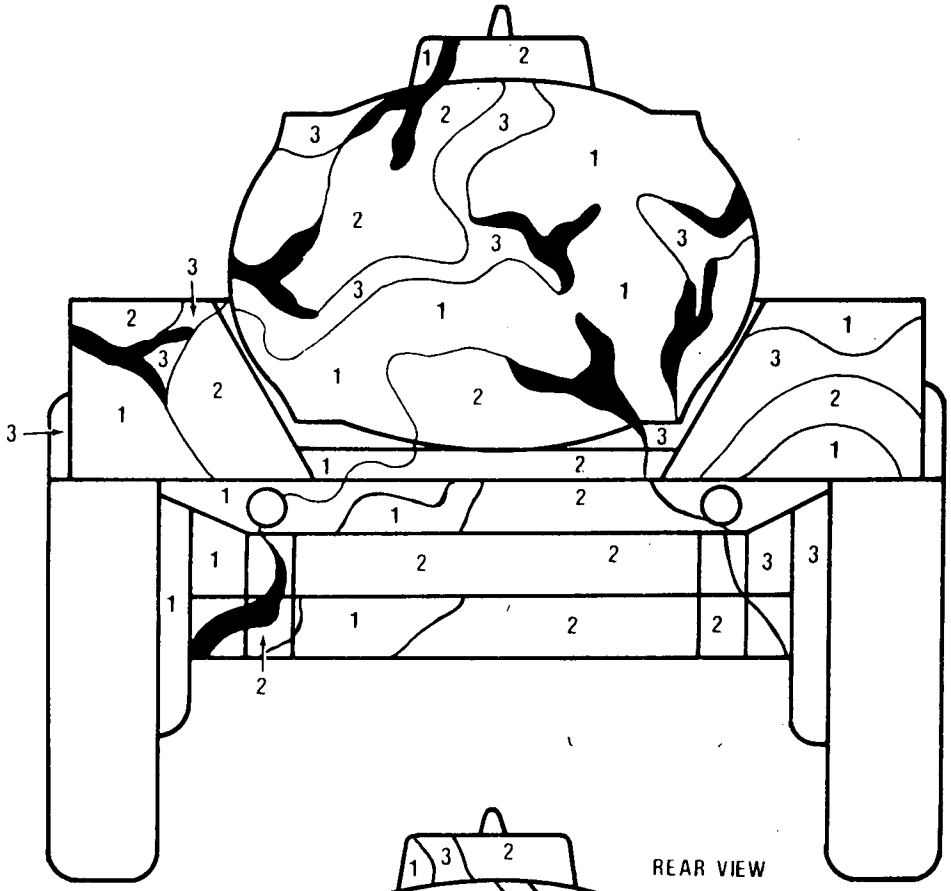

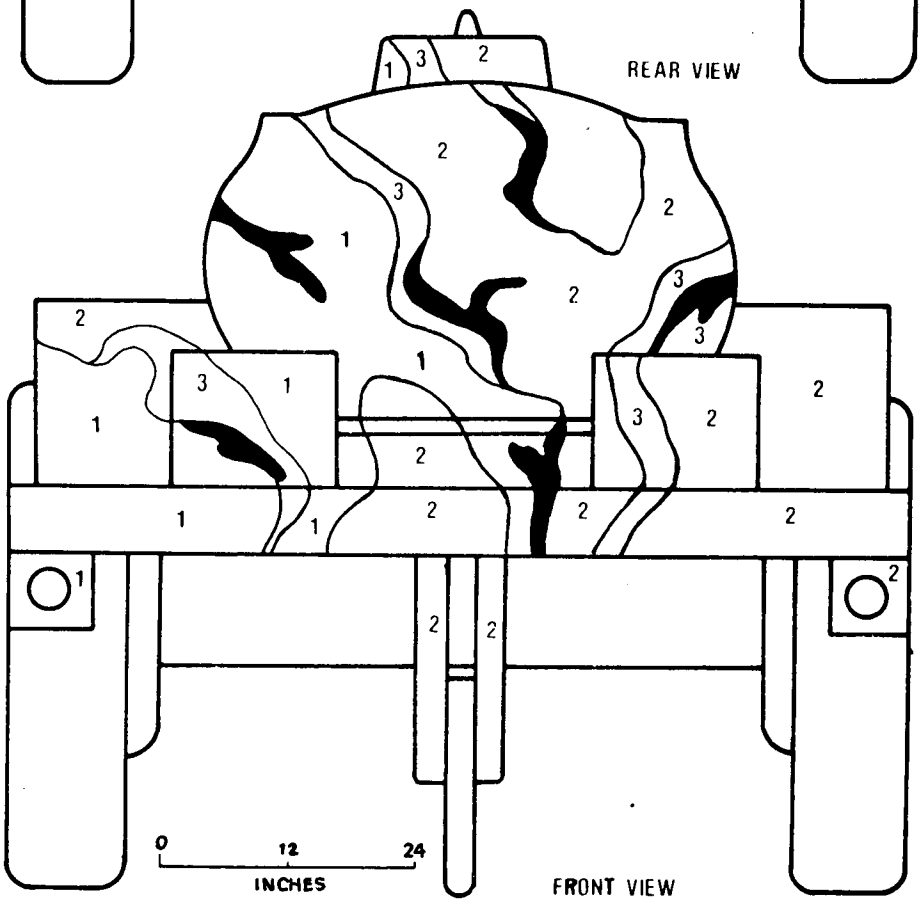

TA031793

Figure 2-25. Trailer, Tank: Water, 400-Gallon, 1½-Ton, 2-Wheel W/E M149. (Sheet 1 of 2).

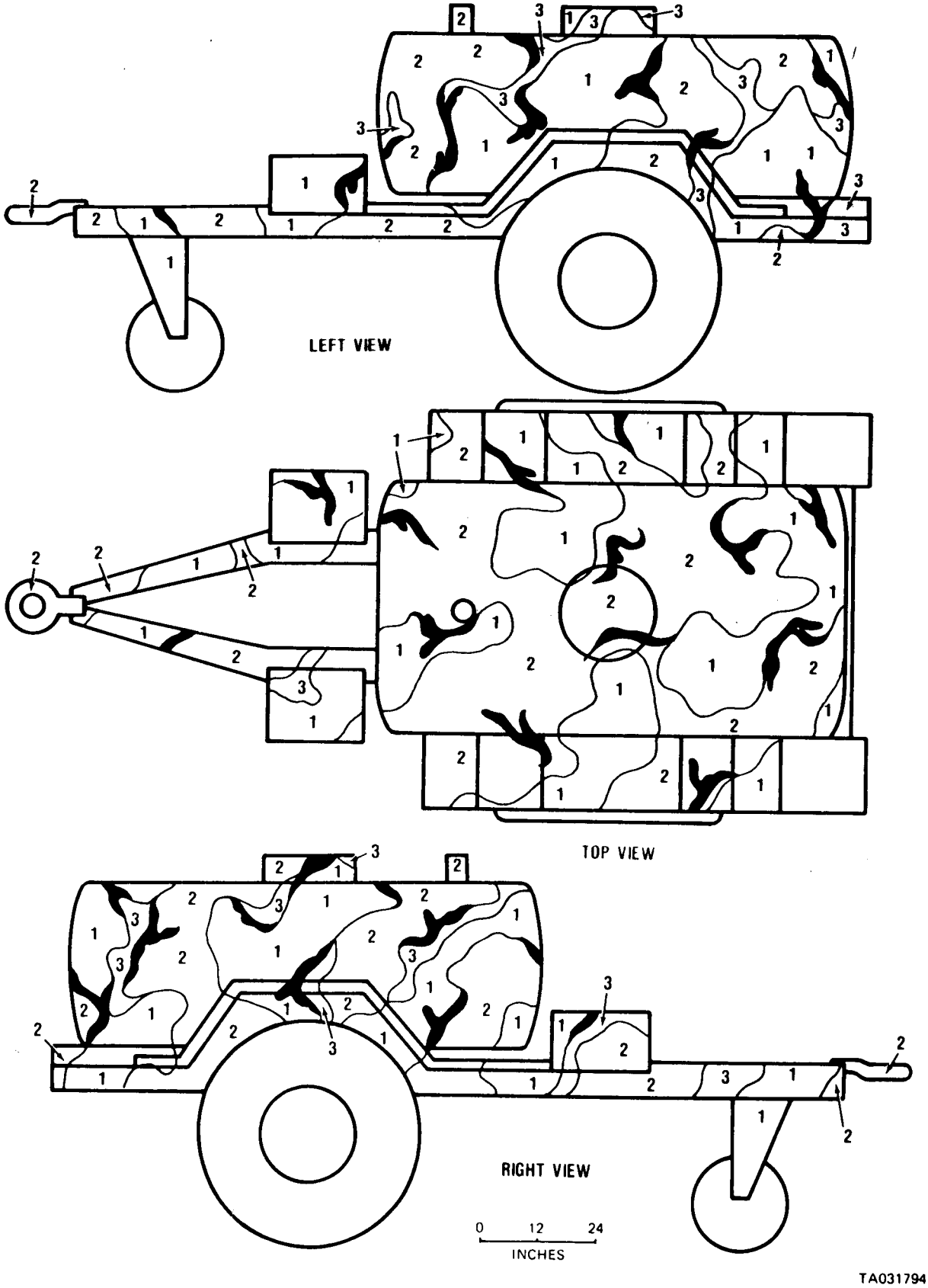

Figure 2-25. Trailer, Tank: Water, 400-Gallon, 1½-Ton, 2-Wheel W/E M149. (Sheet 2 of 2).

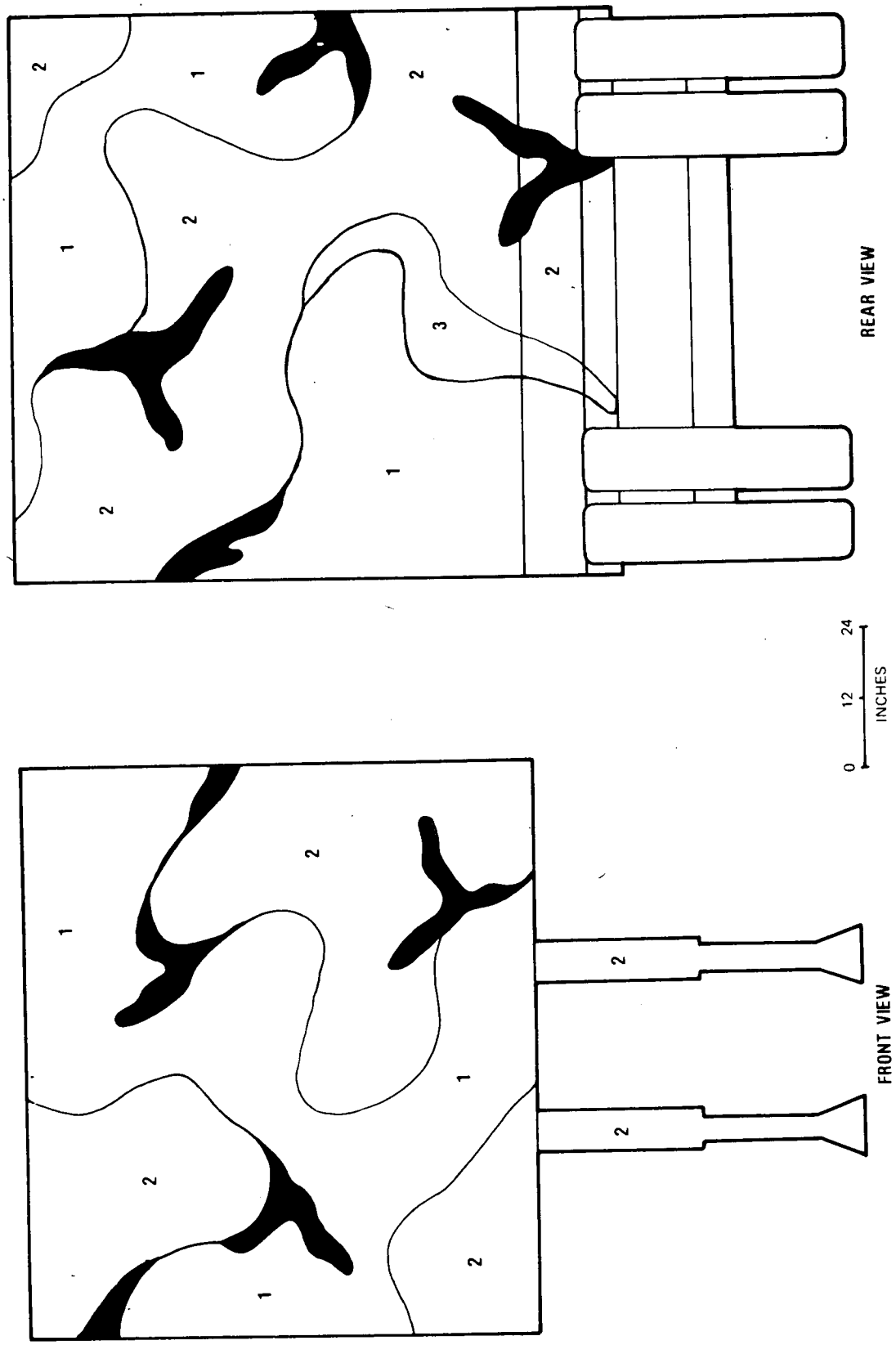

Figure 2-26. Semitrailer, Van: Cargo, 12-Ton, 4-Wheel, M128 (Also M127A1C). (Sheet 1 of 3)

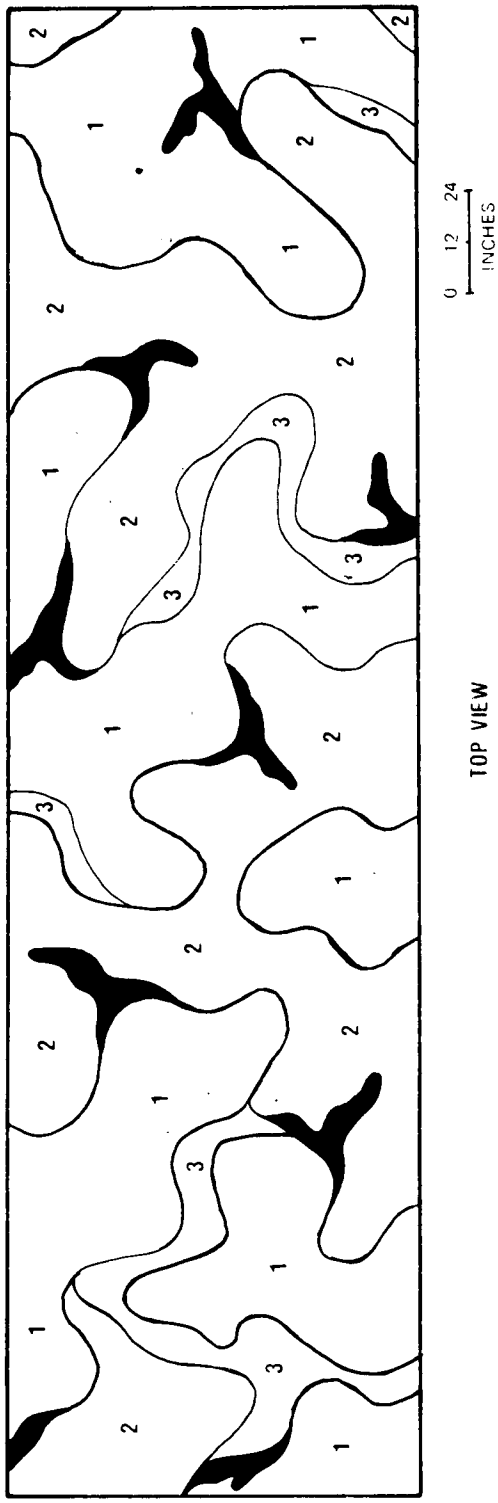

Figure 2-26. Semitrailer, Van: Cargo, 12-Ton, 4-Wheel, M128 (Also M127A1C). (Sheet 2 of 3).

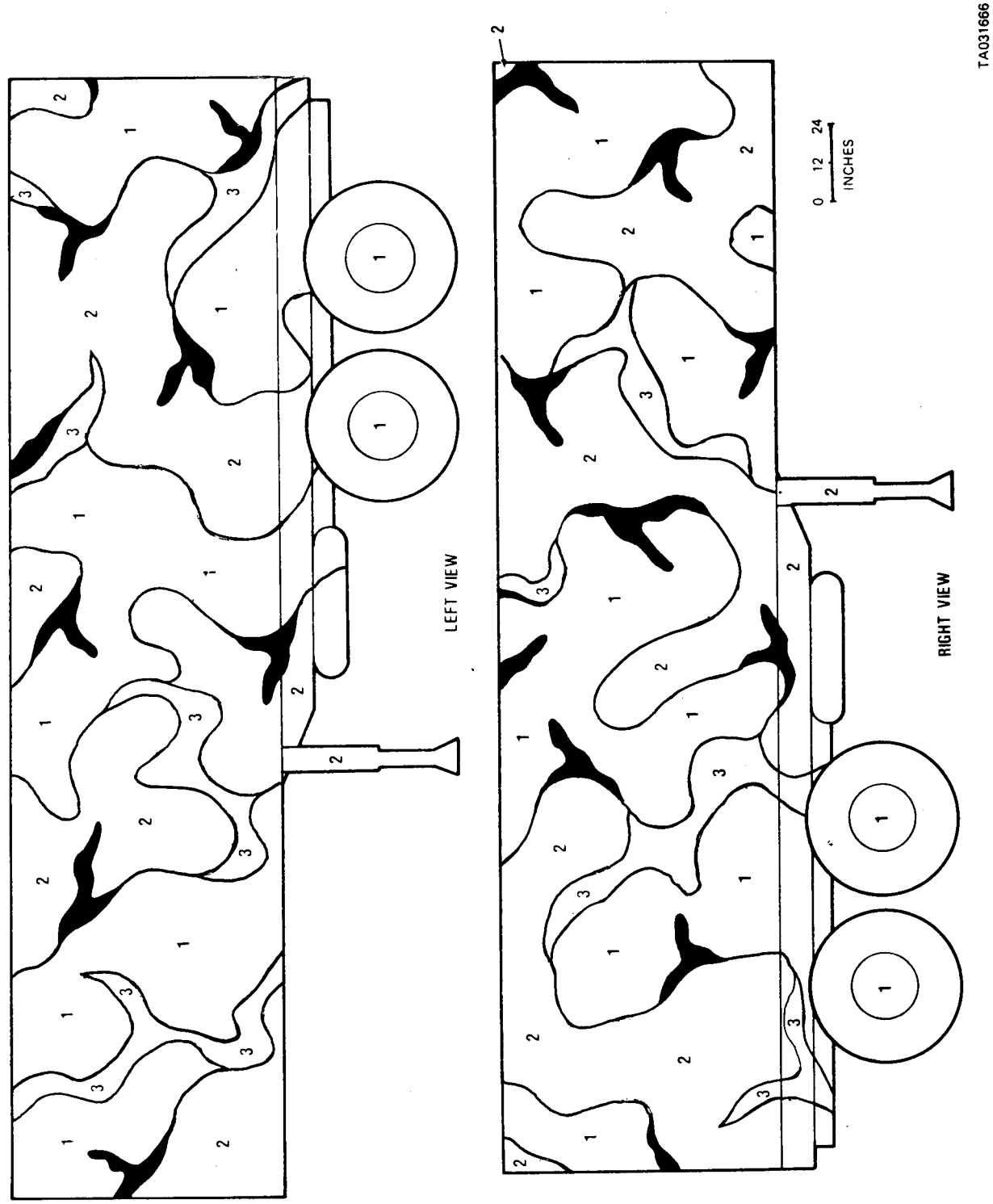

Figure 2-26. Semitrailer, Van: Cargo, 12-Ton, 4-Wheel, M128 (Also M127A1C). (Sheet 3 of 3).

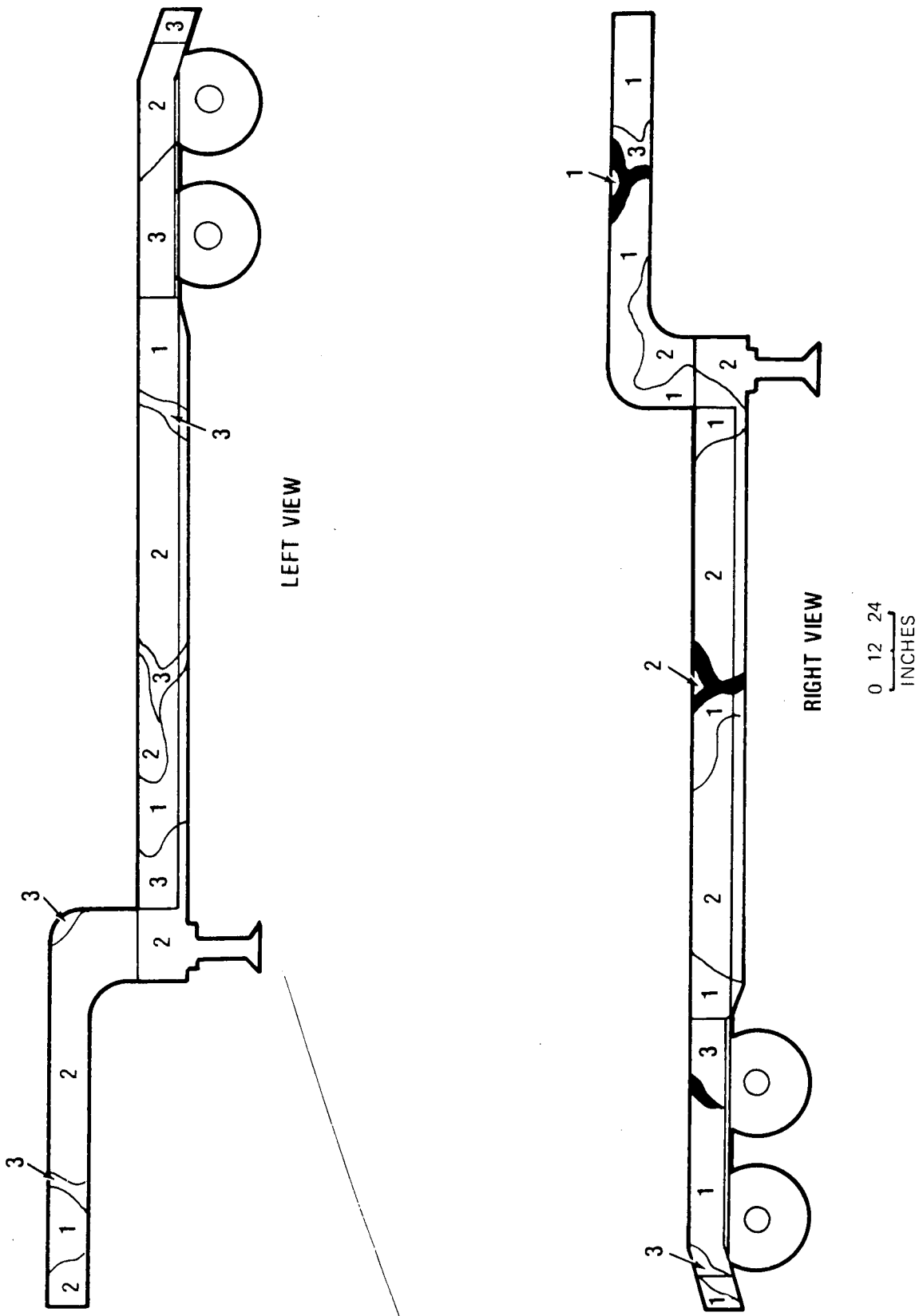

Figure 2-27. Semitrailer, Low Bed: 25-Ton, 4-Wheel, M172A1. (Sheet 1 of 2).

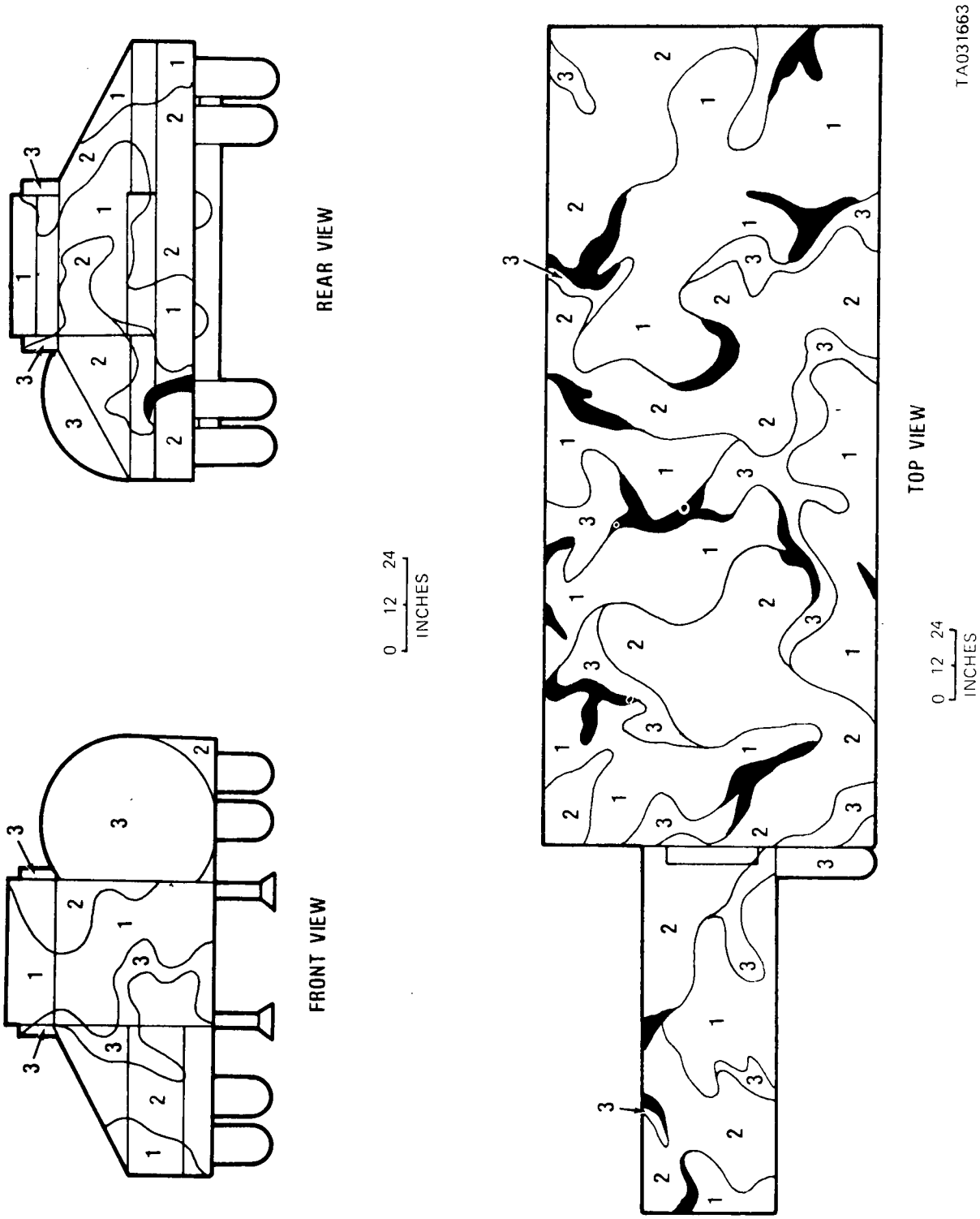

Figure 2-27. Semitrailer, Low Bed: 25-Ton, 4 Wheel, M172A1. (Sheet 2 of 2).

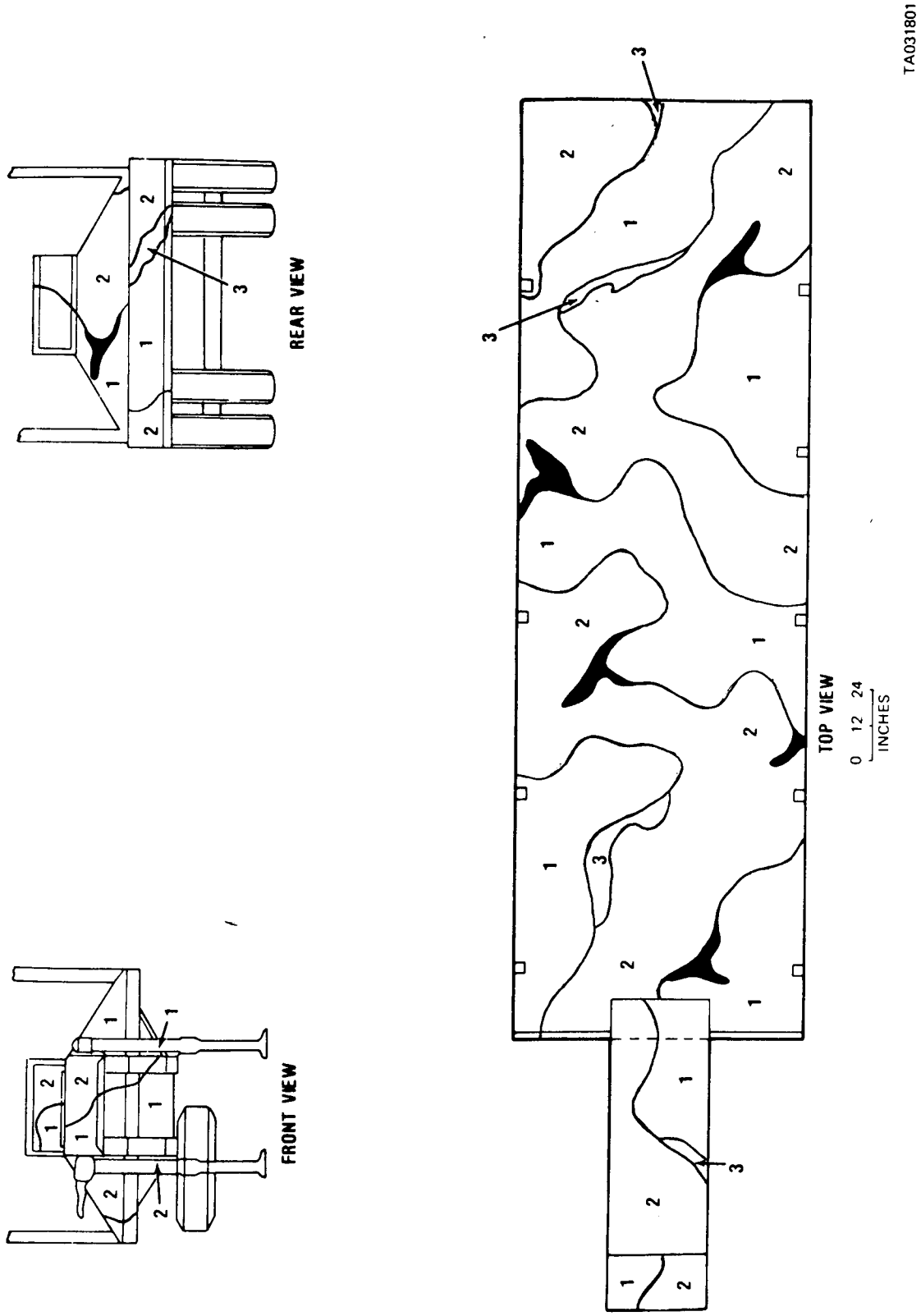

Figure 2-28. Semitrailer, Low Bed: Wrecker, 12-Ton, 4-Wheel M269/M270. (Sheet 1 of 2).

TA031802

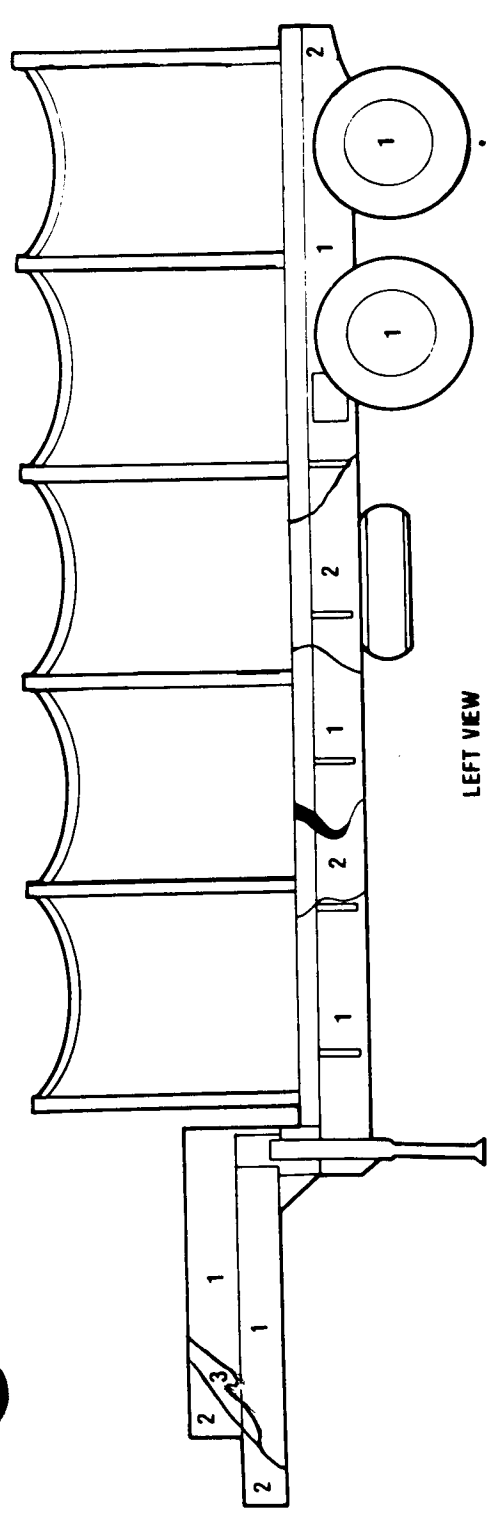

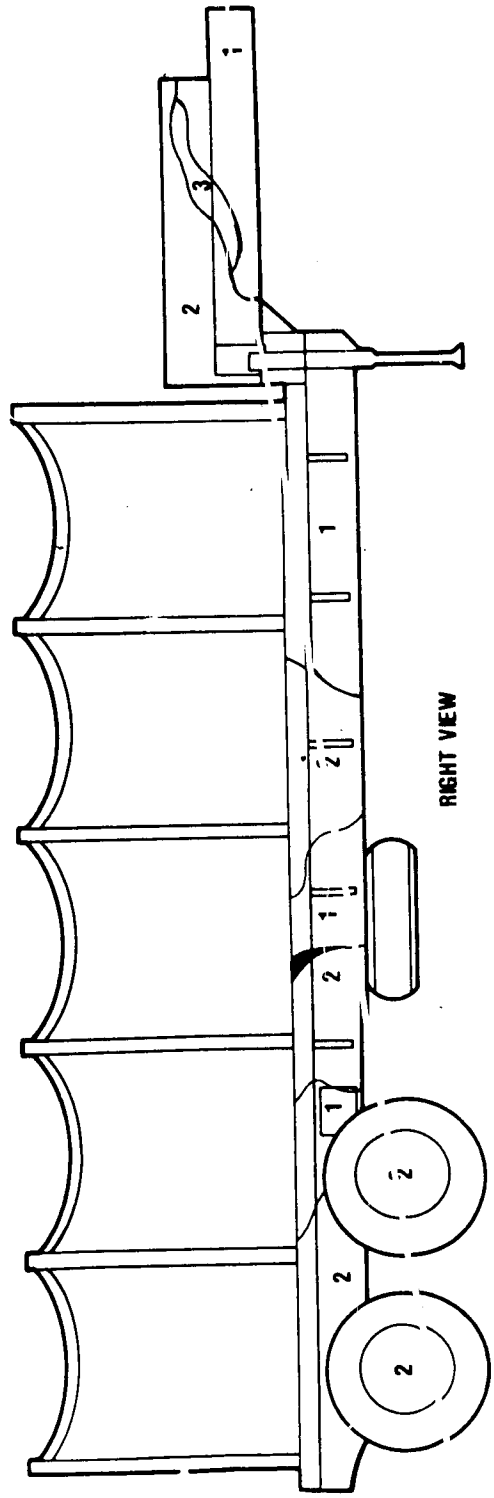

Figure 2-28. Semitrailer, Low Bed: Wrecker, 12-Ton, 4 Wheel M269/M270. (Sheet 2 of 2).

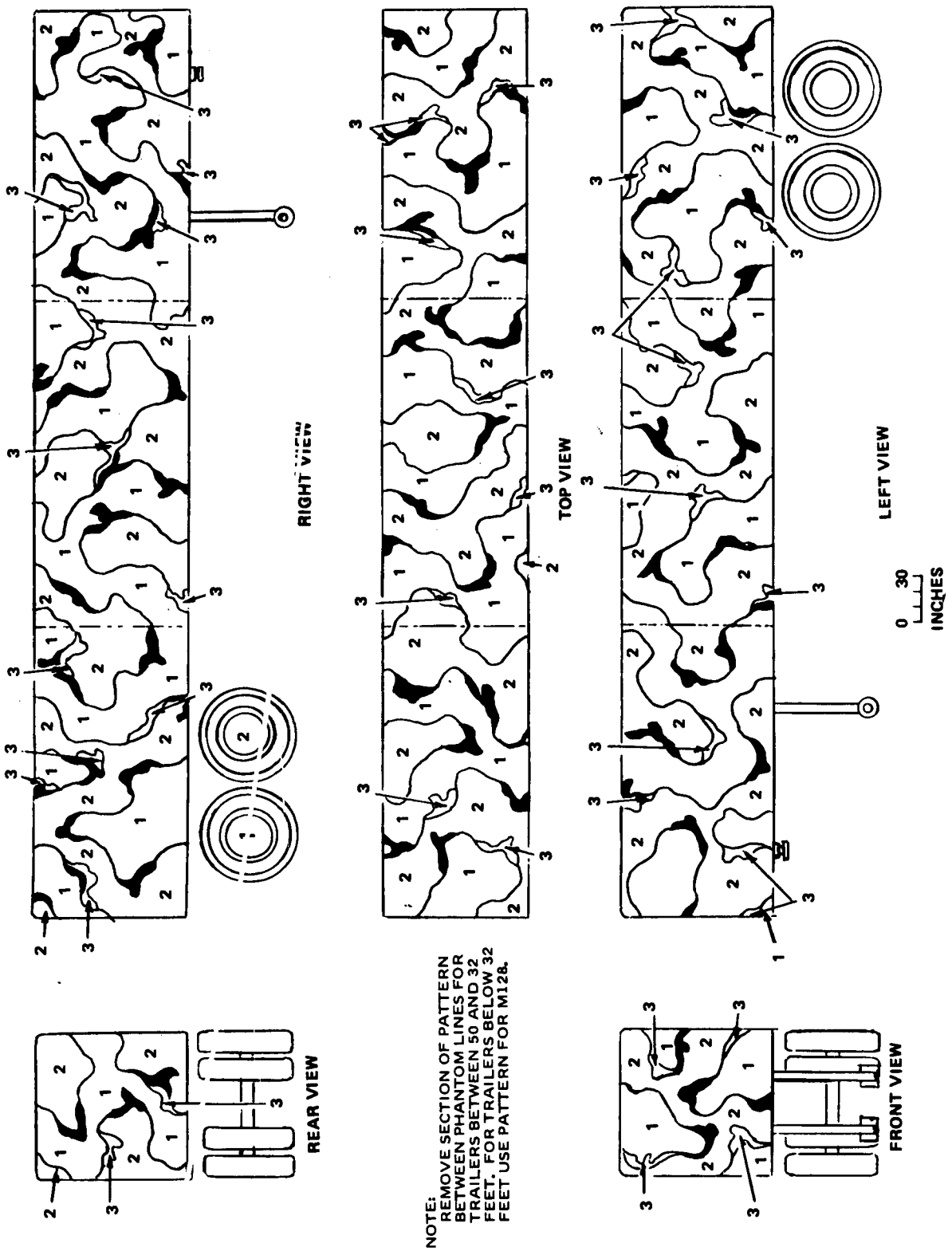

Figure 2-29. Semitrailer Van (Typical Commercial).

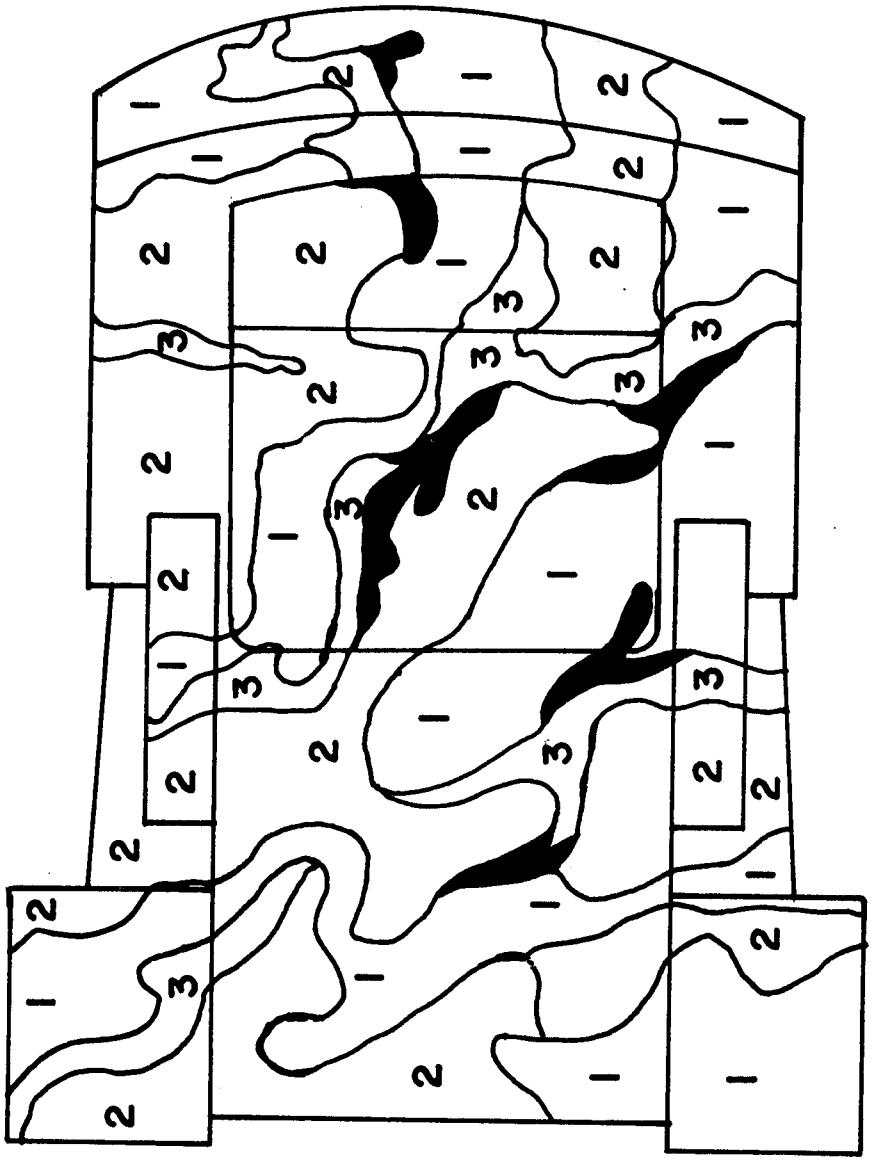

TOP VIEW

Figure 2-30. 10K Forklift (Sheet 1 of 3)

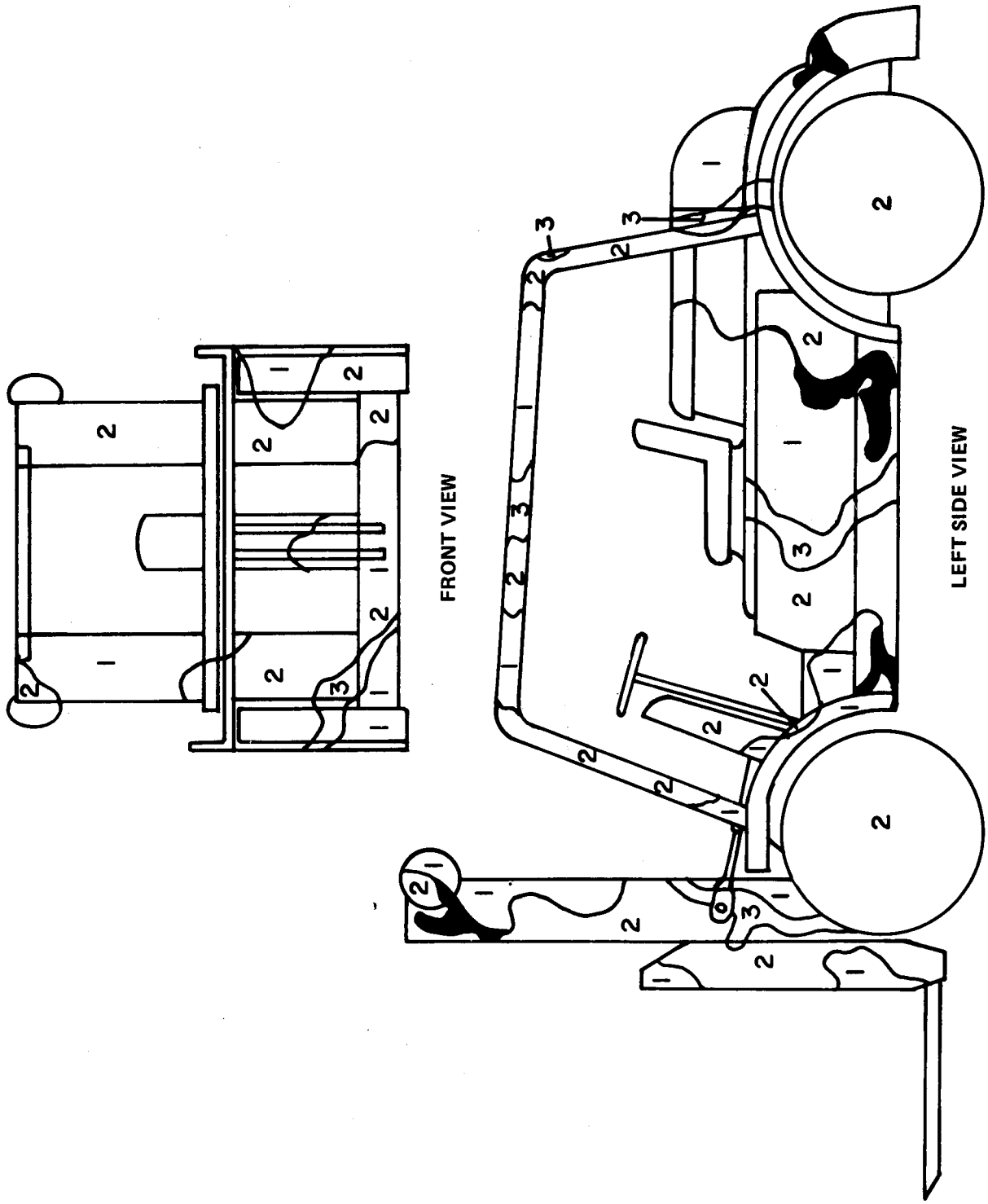

Figure 2-30. 10K Forklift (Sheet 2 of 3)

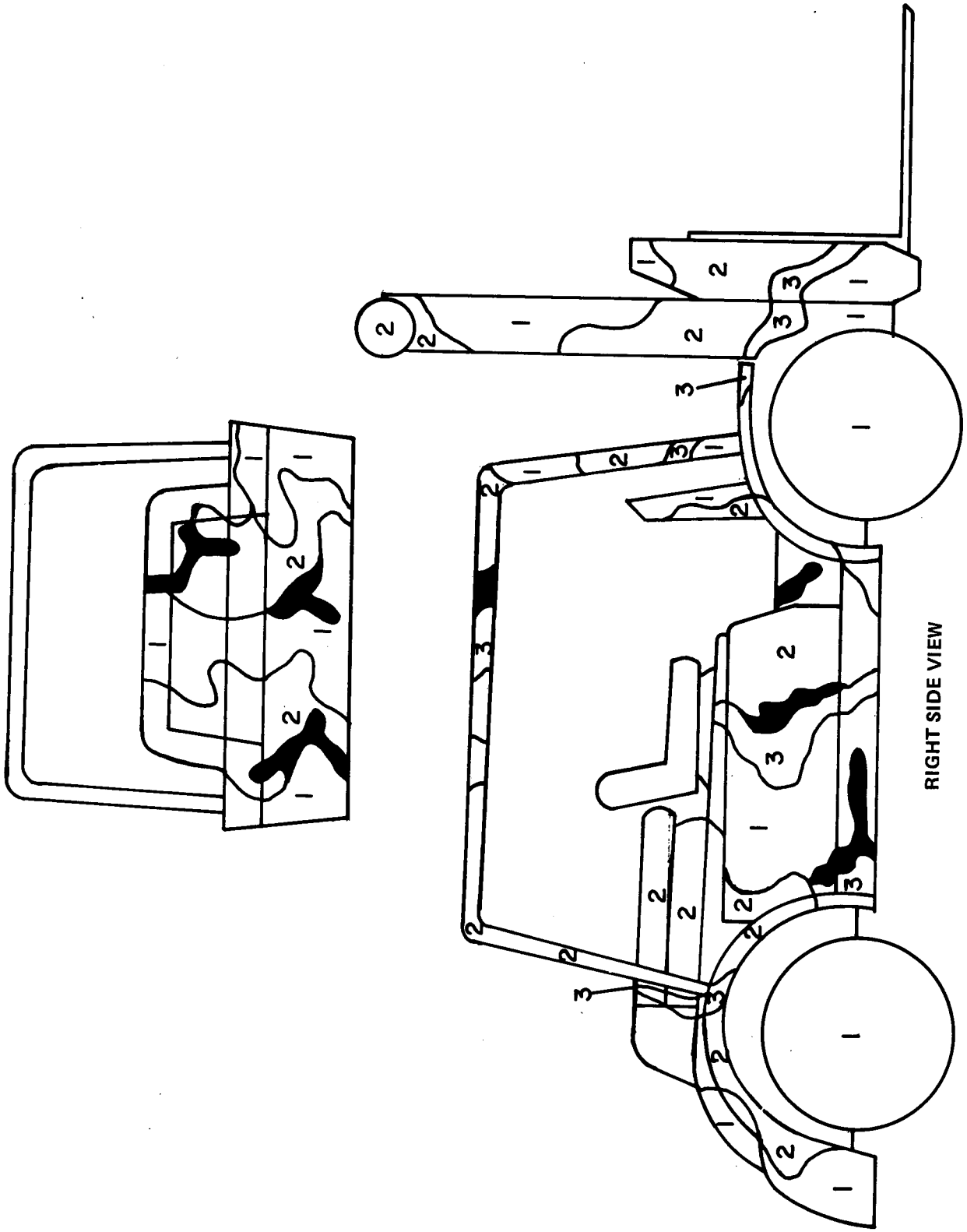

Figure 2-30. 10K Forklift (Sheet 3 of 3)

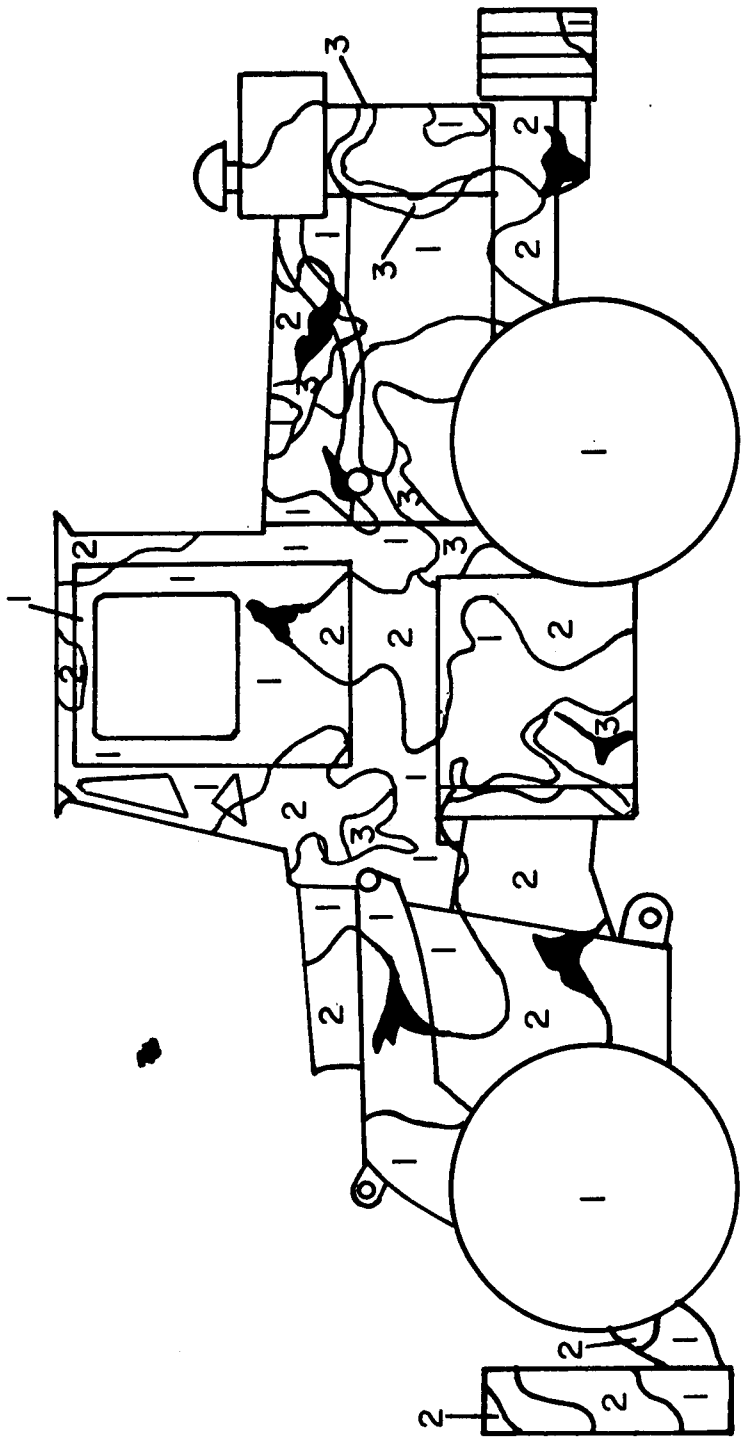

LEFT SIDE VIEW

Figure 2-31. 10K Adverse Terrain Forklift (Sheet 1 of 4)

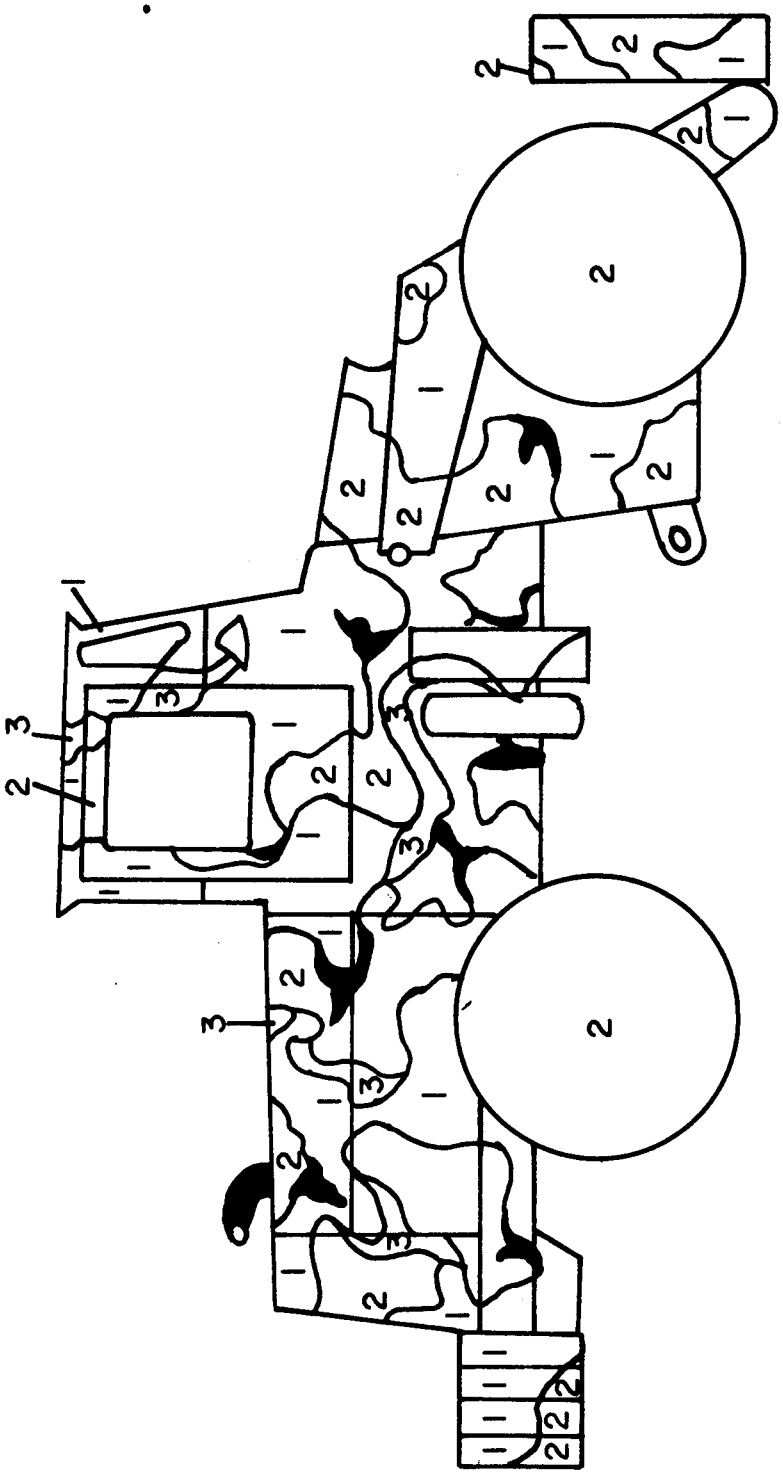

RIGHT SIDE VIEW

Figure 2-31. 10K Adverse Terrain Forklift (Sheet 2 of 4)

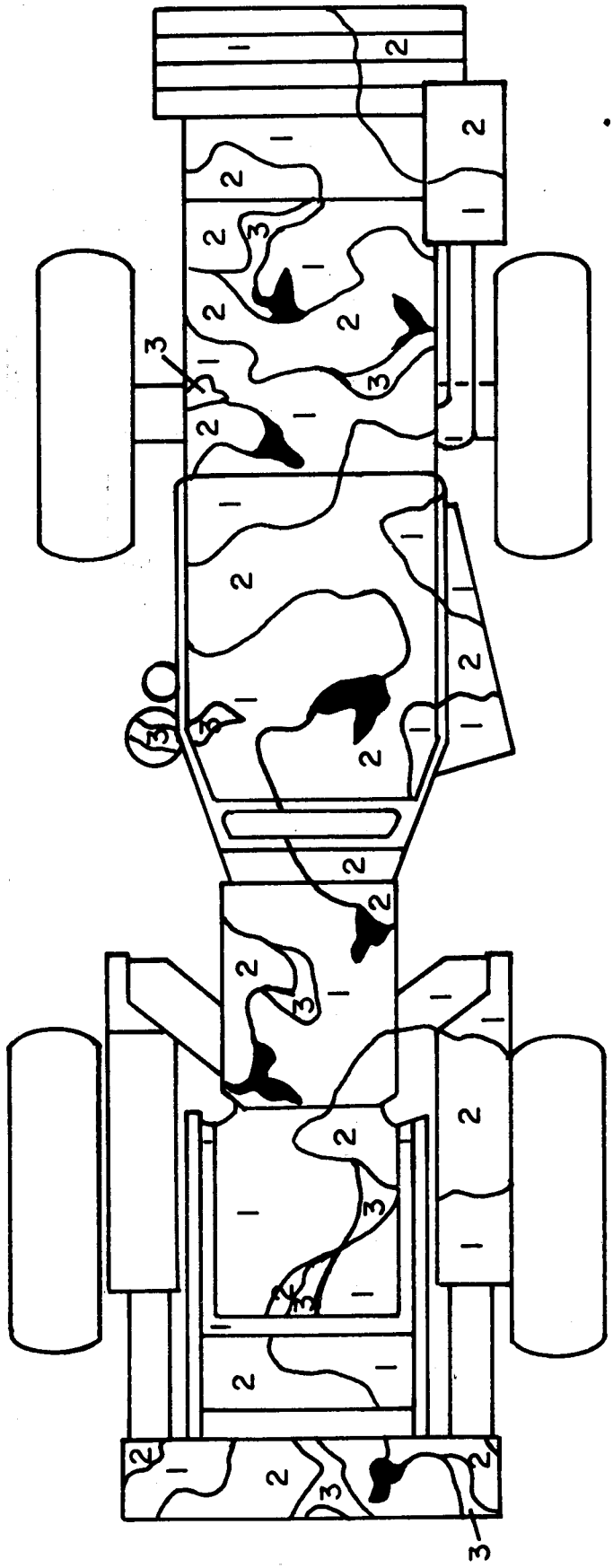

TOP VIEW

Figure 2-31. 10K Adverse Terrain Forklift (Sheet 3 of 4)

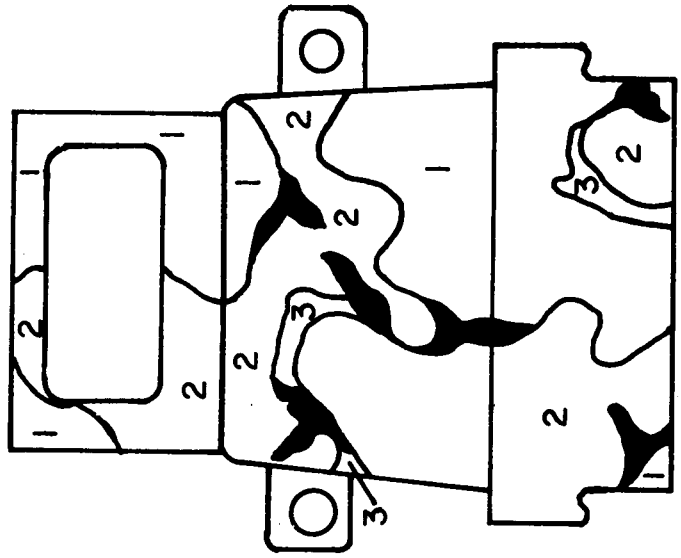

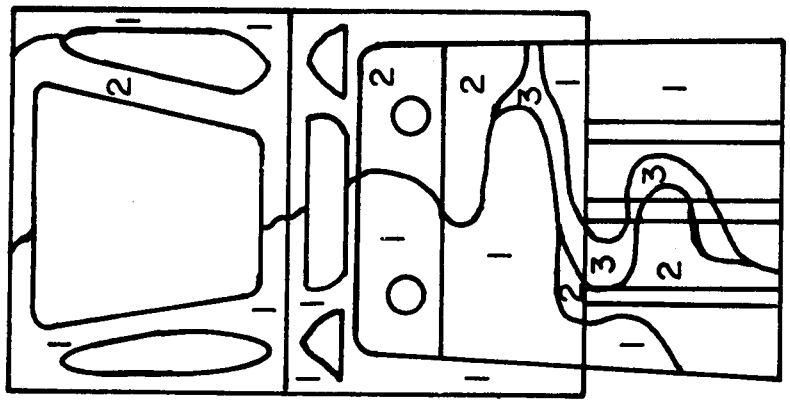

Figure 2-31. 10K Adverse Terrain Forklift (Sheet 4 of 4)

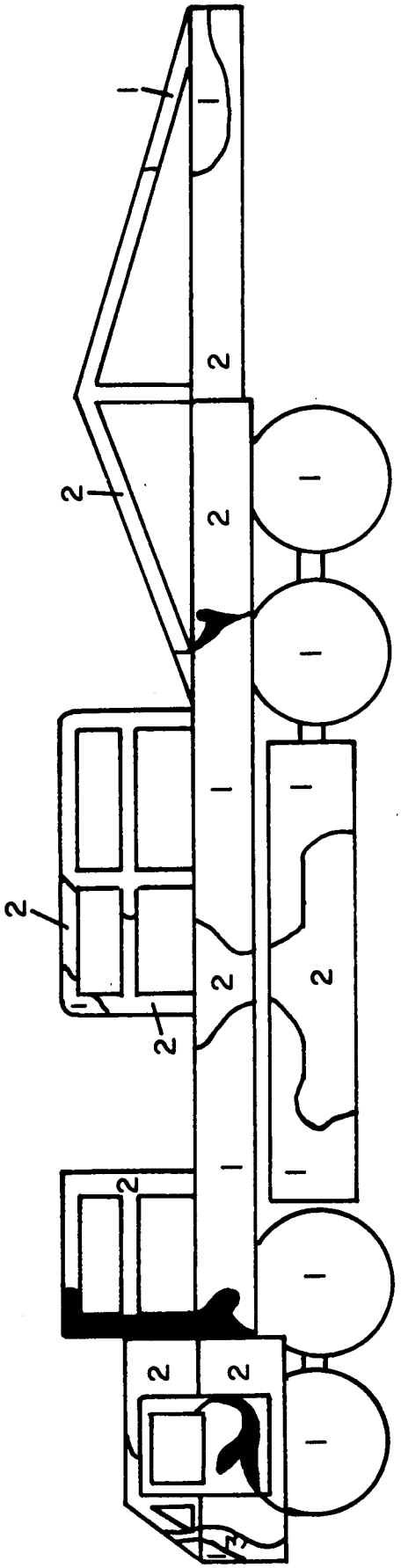

LEFT SIDE VIEW

Figure 2-32. A/S32H-19 TAC Loader (Sheet 1 of 3)

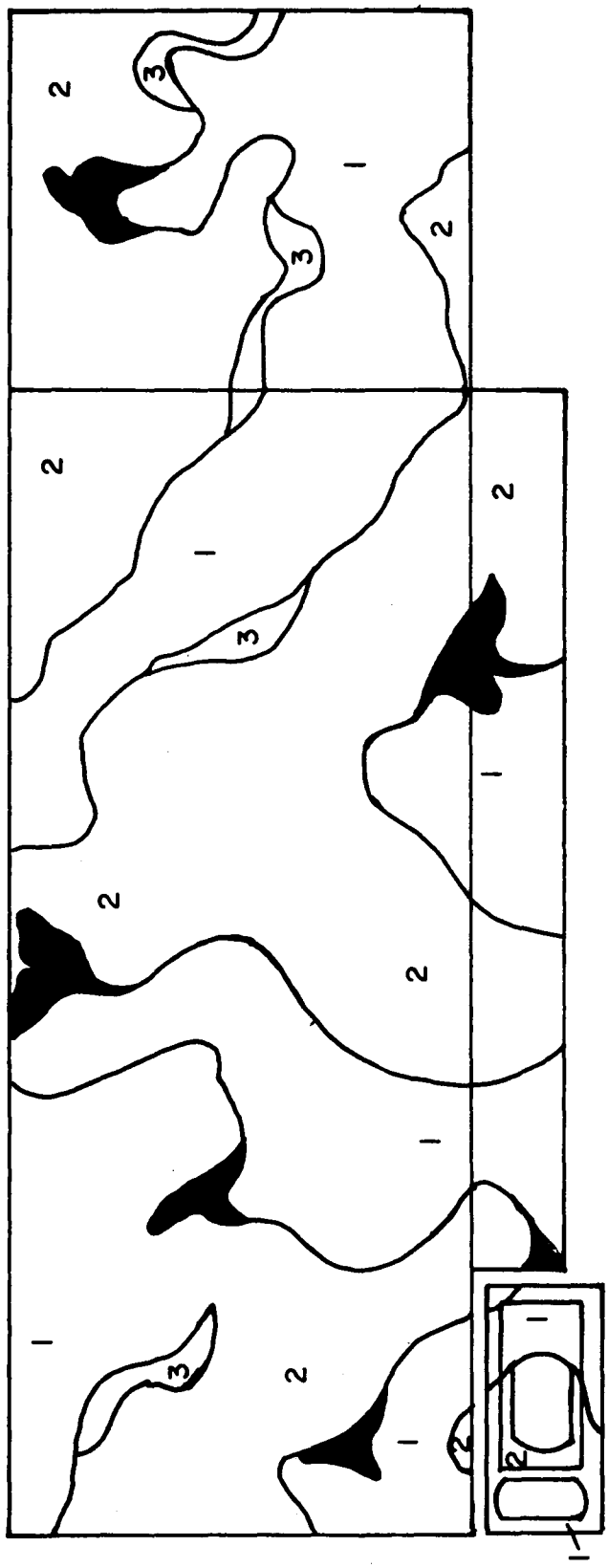

TOP VIEW

Figure 2-32. A/S32H-19 TAC Loader (Sheet 2 of 3)

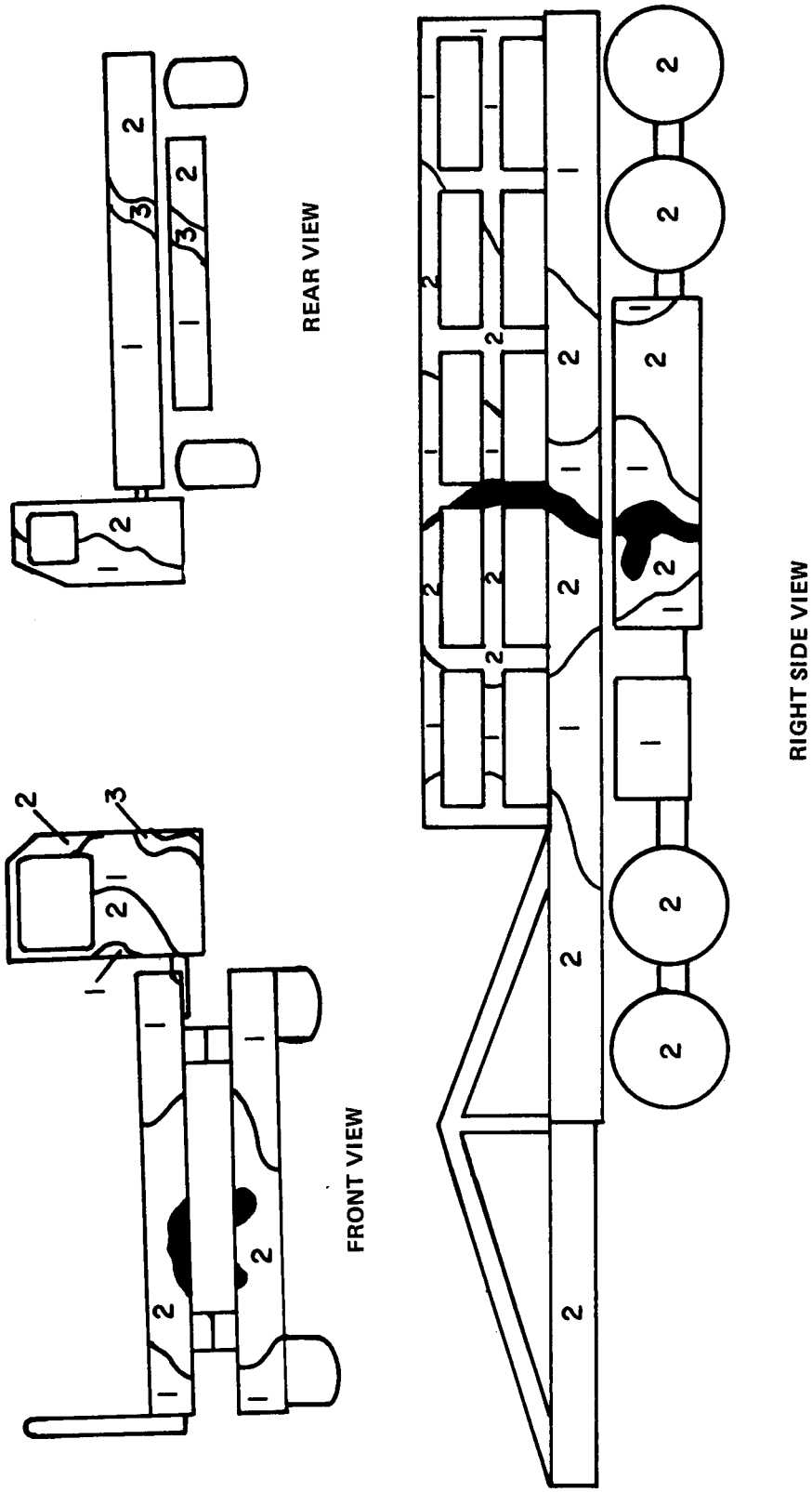

Figure 2-32. A/S32H-19 TAC Loader (Sheet 3 of 3)

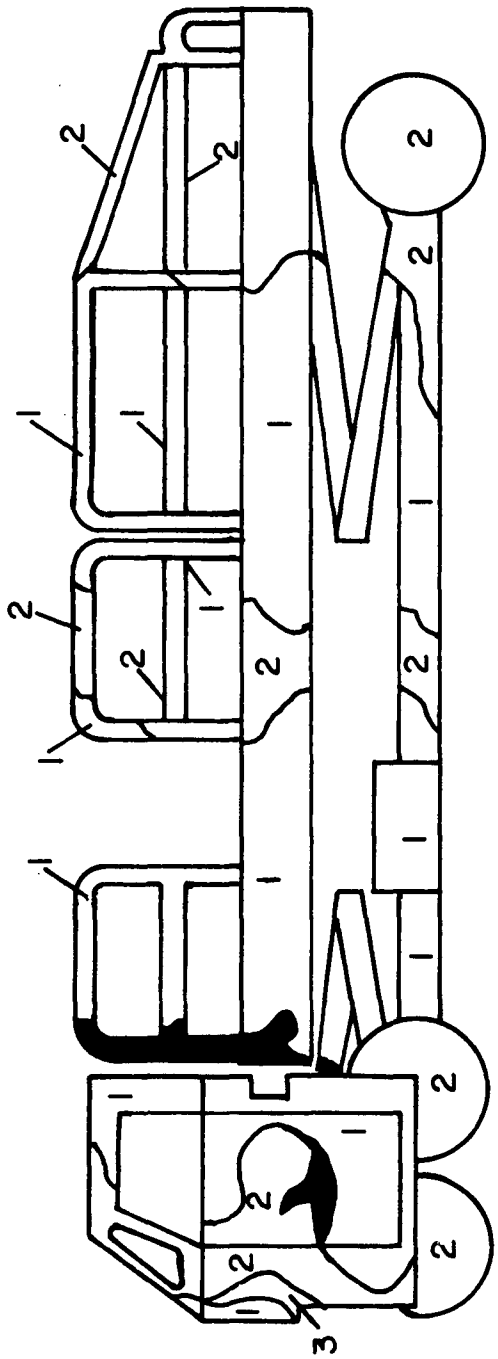

LEFT SIDE VIEW

Figure 2-33. A/S32H-5 Cargo Loader (Sheet 1 of 3)

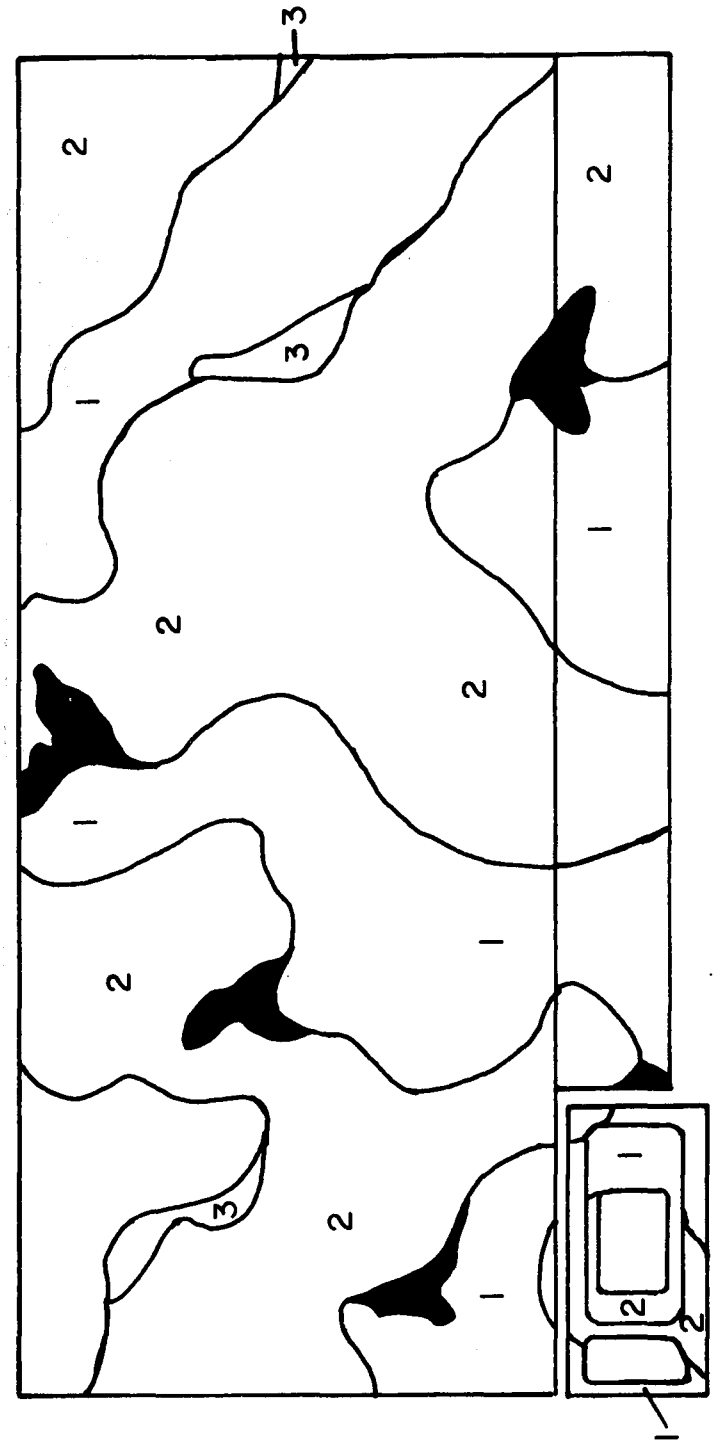

TOP VIEW

Figure 2-33. A/S32H-5 Cargo Loader (Sheet 2 of 3)

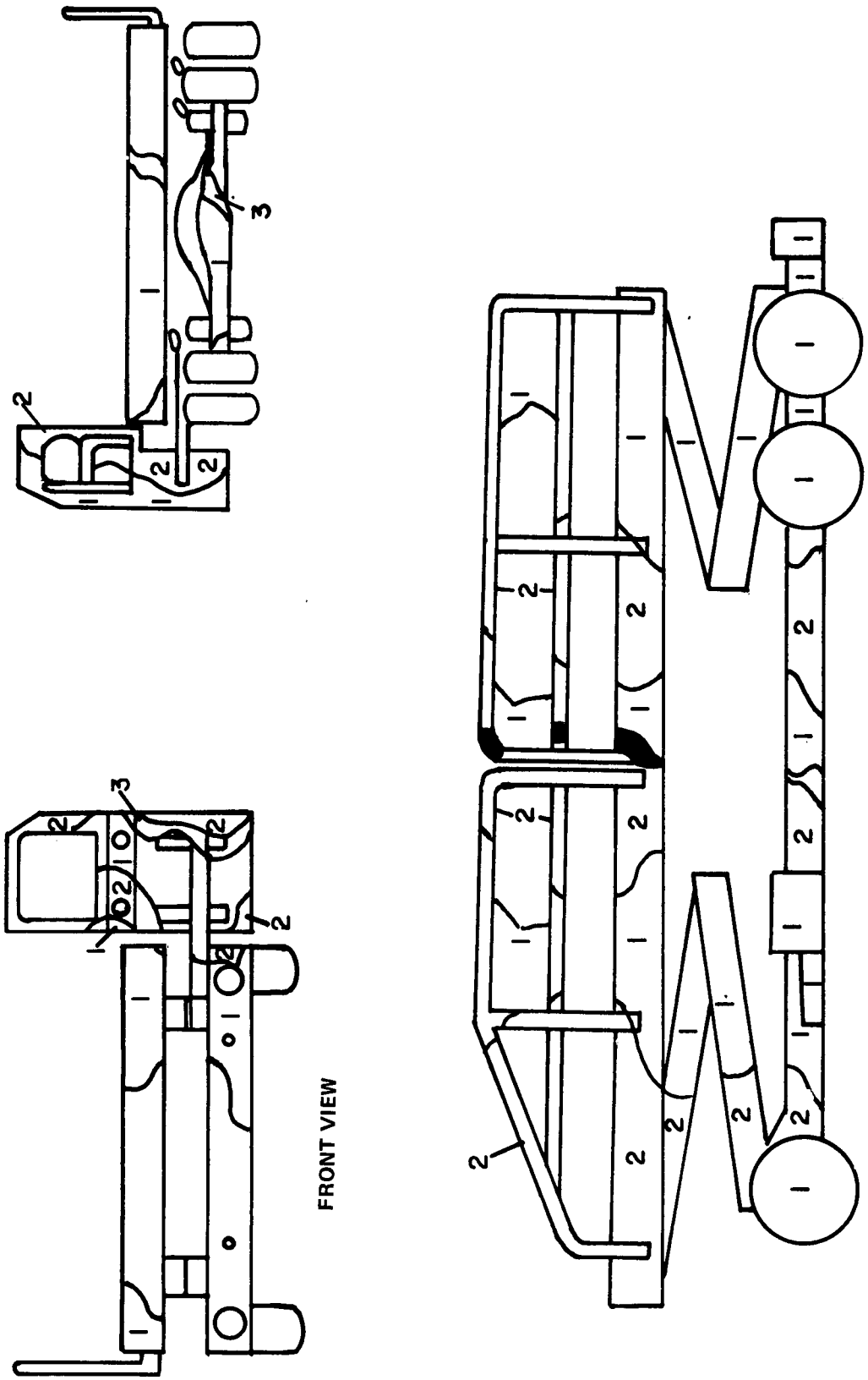

Figure 2-33. A/S32H-5 Cargo Loader (Sheet 3 of 3)

SECTION III

MARKING OF VEHICLES

3-1. GENERAL.

3-2. The policy governing authorization of identification markings or exemption therefrom are contained in AFM 77-310, Vol. I.

3-3. The markings prescribed in this technical order provide a uniform method for identifying vehicles as property of the USAF and serve to associate such property with the organization to which it is assigned. MARKINGS WILL NOT BE PLACED ON VEHICLES, EXCEPT AS AUTHORIZED BY THIS TECHNICAL ORDER. Activity markings may be utilized on flight line vehicles when such markings are deemed mission essential by local commanders. These markings should be simple to apply and easy to remove without imposing damage to the vehicle exterior surfaces. All activity identification markings for all other vehicles may be applied by use of a locally fabricated blue plate, approximately 6 x 12 inches, to be attached to the front license plate holder. All activity markings or insignias will be designed, furnished, and installed by the using organization and must be readily removable to facilitate rotation of vehicles between using activities. Changing to new markings will be performed when replacement is required due to damage or deterioration.

3-4. Vehicles may be required to bear all markings described in the technical order or only a portion of those described, depending upon the type of vehicle, its mission, and the safety factors involved.

3-5. Additions to or deviations from the markings prescribed herein may be made at the discretion of the major command or theater commander concerned where such additions or deviations are required by civil law. The extent of such additions or deviations will be held to an absolute minimum and will be consistent with safe practice.

3-6. Markings will be clearly maintained on all vehicles at all times except as follows:

a. Upon transfer from the USAF, all markings except the registration number shall be removed.

b. Upon transfer within the USAF, all organizational markings shall be removed.

c. Upon permanent transfer to redistribution and marketing activities, all Air Force markings including USAF registration numbers shall be obliterated or removed. Data plates showing chassis and engine service numbers shall not be removed.

d. Upon transfer to MAP, all Air Force markings shall be removed.

3-7. When the requirements for camouflage or concealment outweigh the requirement for identification, the markings prescribed herein may, by direction of the major command concerned, be obliterated with some readily removable substance.

3-8. Markings for all vehicles except those in paragraph 3-10 will be accomplished by applying reverse or direct silk screened reflectorized tape and die cut - prespaced letters and numbers, conforming to Federal Specification LS-300A, Type I, Class 3, Reflectivity 1, using the following colors:

a. Reflective red background with reflective silver letters on red, yellow, white or gray surfaces conforming to Federal Specification LS-300A, Type I, Class 3, Reflectivity 1, Color J.

b. Die cut prespaced reflective yellow letters and numbers on blue surfaces shall conform to Federal Specification LS-300A, Type I, Class 3, Reflectivity 1, Color J.

c. Die cut prespaced reflective silver letters and numbers on blue surfaces for recruiting service only shall conform to Federal Specification LS-300A Type I, Class 3, Reflectivity 1, Color G.

d. Die cut prespaced reflective black letters and numbers on white surfaces for metropolitan and van type emergency ambulances only shall conform to LS300, Type 1, Class 1, color black, with Reflectivity 10 candle power (CP) or less.

NOTE

All die cut-prespaced letters will comply with Gothic style, Bureau of Public Roads Standards, Series C.

3-9. Markings shall be applied on MHE and base maintenance equipment painted yellow, utilizing silver reflective letters and numbers on a red background conforming to Federal Specification LS-300, Type 1, Class 3, Reflectivity 1.

NOTE

Markings presently applied to MHE and Base Maintenance will not be changed solely to comply with this TO. The markings will be changed when equipment is repainted or remarking is considered essential.

3-10. Vehicles painted olive drab (OD) and 463L equipment painted polyurethane green color number 24052 will be stencilled using paint, black, lusterless color number 37038. Danger markings may be applied using paint, red, lusterless color number 31136.

NOTE

Stencil markings may be applied by using stencil brush, stencil roller, or spray equipment. Letters and numerals used for marking vehicles shall be as illustrated in MIL-STD-1223.

3-11. MARKING REQUIREMENTS FOR VEHICLES USED ON LANDING AREAS.

a. Vehicles which operate primarily on the apron and taxiways painted under the tone-down program (dark green or olive drab; i.e., fire trucks, fuel servicing trucks, A/S32A-2 water trucks, 463L and AGE equipment) will be marked with silver reflectorized tape in accordance with AFOSH Std. 127-66. This vehicular equipment will be highlighted to indicate length, width and height using silver reflective tape conforming to LS-300A, Type II, Class 3, Reflectivity 1, color G. The tape will be applied in 2 inch wide strips, 8 to 12 inches long as illustrated in figures 4-40, 4-41, 4-42, and 43.

NOTE

The highlighting markings illustrated in figures 4-40, 4-41, 4-42, and 4-43, are to be used as a guide for marking all vehicles where highlighting is required.

b. All other vehicles operating primarily on the apron and taxiways excluding general purpose shall be outlined in accordance with paragraph 3-11.a. above if not provided with any of the following:

(1) Reflective tape markings.

(2) Clearance lights.

(3) Hazard warning lights (four-way flashers) as required by the Department of Transportation.

(4) Nonrevolving pulsating type light of aviation yellow as specified in MIL-C-25050.

(5) Revolving flasher type light of aviation red as specified in MIL-C-25050.

NOTE

Lighting requirements are prescribed in Section VI of this technical order. General purpose vehicles (i.e., sedans, station wagons, multistop panels, pickup trucks, buses, etc.,) will not be outlined in reflectorized tape.

3-12. TYPES OF MARKINGS.

3-13. IDENTIFICATION MARKINGS. The term identification includes the following:

a. Agency Identification - US Air Force. All Air National Guard vehicles will be marked as US Air Force. The State name will be placed immediately above the Air National Guard decal (see paragraph 3-35.a.).

b. Registration Number - established and assigned to vehicles in accordance with Air Force Manual 77-310, Volume I.

c. Legend - "For Official Use Only."

3-14. NATIONAL SYMBOL AND INTERNATIONAL MARKINGS.

a. National Symbol. The National Symbol may be applied to all vehicles operated by the USAF in overseas theaters, by direction of the Theater Commander concerned. Size and location are prescribed in paragraph 3-27.

b. International Markings. Where required by NATO, SEATO, CENTO, etc., agreements, Air Force vehicles will contain the markings prescribed in those standards that have been ratified by the US Commands having jurisdiction over military activities in the NATO, SEATO, CENTO, etc. Areas will insure compliance with the provisions of

the International Agreements unless otherwise instructed by Headquarters USAF.

3-15. INSTALLATION MARKINGS. Markings will be applied to vehicles when assigned to, or upon receipt by, the organization or installation by which they are to be operated. The markings will be carried on the vehicle at all times while it is so assigned except as prescribed by paragraph 3-29.b.

3-16. TACTICAL MARKINGS. Tactical markings are authorized only on vehicles assigned to tactical units and shall be removed when vehicles are transferred from the jurisdiction of the commander prescribing their use. Tactical vehicle markings are prescribed in Military Standard 642.

3-17. CONCEALED MARKINGS. All U.S. Air Force and U.S. GOVERNMENT identification markings shall be concealed in unmarked OSI vehicles. The vehicle nomenclature/data plate may be mounted inside glove boxes that can be locked or inside the trunk compartment. If the vehicle registration number and serial number is not reflected on the data plate it will be stenciled inside the trunk lid.

3-18. DECALCOMANIAS. Decalcomanias, used to reflect conversion of miles per hour to kilometers per hour, tower signals for control of airdrome traffic, non-reflectorized red cross decals, and all other non-reflectorized markings will be manufactured from material conforming to MIL-M-43719, Type II, Class 1.

3-19. SPECIAL MARKINGS. Special markings, i.e., no smoking signs, fluid identification, will be applied as specified in paragraph 3-36.

3-20. SIZE OF MARKINGS. The sizes of the letters and numerals to be used in accomplishing vehicle markings are as follows:

a. "U.S. Air Force". . . . . 1 1/2 inch

b. Registration Number . . . . . 1 1/2 inch

c. "For Official Use Only" . . . 3/4 inch

d. The size of all other markings is included in the paragraph pertaining to the specific marking involved.

NOTE

Present stocks of reflective marking material will be used prior to ordering new sizes.

3-21. LOCATION OF VEHICLE IDENTIFICATION MARKINGS.

3-22. USAF vehicles will be identified on each side and in the rear, in accordance with paragraphs 3-23 through 3-25.

3-23. Identification on the sides of the vehicle will consist of:

a. Agency Identification. The top line will consist of the words "U.S. Air Force."

b. Registration Number. The middle line will consist of the USAF registration number assigned to the vehicle. When applying registration numbers on the vehicle, a double space will be left between the letter and the sequence number, in accordance with Air Force Regulation 77-6.

Example: 71B 1234

c. Legend. The bottom line will consist of the legend "For Official Use Only." Special purpose vehicles and materials handling and construction equipment do not require the legend.

3-24. Identification on the rear of the vehicle will consist of:

a. The agency identification.

b. The USAF registration numbers.

c. The legend is not required to be displayed on the rear of the vehicle.

3-25. Location of identification, sides and rear:

a. On passenger cars, station wagons, ambulances, carryalls, suburbans, fire trucks, trucks and truck-tractors, identification will be centered on each front door or in a comparable position in relation to the driver's seat on vehicles without doors.

b. On trailers, semitrailers and buses, identification will be centered vertically on each side of the front quarter of the vehicle.

c. The location of identification on the rear of the vehicle is not prescribed due to the various types of design characteristics involved. The location and arrangement of identification, however, will be such that it will not be exposed to excessive abrasive action under normal operation and so that the vehicle may be easily identified from the rear. If space does not permit, the agency identification will be omitted.

d. Due to the various types of materials handling equipment, the exact location for identifi-

cation is not specified. These markings will be applied, using figures 4-12 and 4-13.

e. Identification markings on tractors, other than truck-tractor or towing tractor, will be applied as follows:

(1) On Industrial-Tractors, place "U.S. AIR FORCE REG. NO. _____."

(2) On Crawler Tractors place "USAF" and the registration number "_____" on two lines, sides and rear of seat, one inch between lines. If space does not permit markings on the seat sides, place "USAF" and the registration number "_____" on one line on both sides of the hood.

f. On sidecars of motorcycles, identification will be centered vertically on the door or outside panel of the vehicle. On solo motorcycles, the location of the identification should be such that it will permit easy identification of the vehicle.

3-26. Location of all other markings is included in the paragraph pertaining to the specific marking involved.

3-27. NATIONAL SYMBOL.

a. A white, five pointed star is prescribed as the national symbol. This symbol will be applied on vehicles assigned to units in overseas operations when directed by the theater commander.

b. The size of the national symbol will vary considerably, depending on the type vehicle concerned. It should be large enough to take full advantage of the surface on which it appears and should utilize the largest clearly visible space.

c. When used, the national symbol will be applied to the hood and on both sides of a vehicle utilizing lusterless white paint, color number X37875, or non-reflective decals, On horizontal surfaces, the star will be placed so that one of the five points is directed toward the rear of the vehicle. On vertical, or nearly vertical surfaces, one point will be squarely up.

d. The national symbol will not be used on vehicles operated in the continental United States.

3-28. INSTALLATION MARKINGS.

a. Display of installation markings will be at the discretion of MAJCOMS.

3-29. Markings for vehicles assigned for use by depots, bases, and airfields will consist of two groups.

a. The first group will indicate the major command to which the vehicle is assigned. This group will consist of letter abbreviations for the command concerned as follows:

ABBREVIATION	COMMAND
AAC	Alaskan Air Command
ADC	Air Defense Command
AFE	Air Force in Europe
AFLC	Air Force Logistics Command
AFRES	Air Force Reserve
AFSC	Air Force Systems Command
ATC	Air Training Command
AU	Air University
BMC	Brazil Military Commission
CG	Chief of Staff, USAF
MAC	Military Airlift Command
PACAF	Pacific Air Force
SAC	Strategic Air Command
TAC	Tactical Air Command
AFCC	Air Force Communications Command
USAFA	Air Force Academy
ESC	Electronic Security Command
USAFSO	USAF Southern Command

b. The second group will be the abbreviated designation of the assigned installation. Vehicles stationed at bases, airfields, aircraft control and warning sites, or other installations which do not have a definite Air Force designation, will use the abbriviated designation of the organization to which the vehicles are assigned.

EXAMPLE:

W-PAFB	Wright-Patterson Air Force Base
TAFB	Tinker Air Force Base

KAFB	Kelly Air Force Base
RAFB	Robins Air Force Base
94ABS	94th Air Base Squadron
149ACWS	149th Aircraft Control and Warning Station

c. On general purpose vehicles the major command and base designation will be displayed on a locally fabricated blue plate approximately 6 x 12 inches to be attached to the rear license plate holder or locally fabricated holder when required and will normally be bolted to bumper or bumperettes. Insure that adequate space is maintained between the last letter of the command designator and the first letter of the base designator. The Command and installation marking as indicated in preceding steps a. and b. will be stenciled on base maintenance equipment, material handling equipment, trailers, and semi-trailers using appropriate colored paint. On fire trucks and all other special purpose vehicles where license plate holders are not provided, the command and base designation may be stenciled on bumpers or bumperettes as illustrated in Figure 4-16, using appropriate colored paint.

3-30. Air National Guard Vehicles. Markings for vehicles (except those noted in paragraph 3-33.) assigned to the Air National Guard consist of three groups: 1) Initials "ANG", 2) abbreviation of the state in which the ANG is located, and 3) abbreviation of the city used in the base mailing address. EXAMPLE: ANG-NY-SYC, Air National Guard, New York, Syracuse.

3-31. Reserve Officers' Training Corps Vehicles. Markings for vehicles assigned to the Air Force ROTC consist of two groups: 1) initials "ROTC", and 2) abbreviation of the institution to which the vehicle is assigned. EXAMPLE: ROTC-USC-USAF, Reserve Officers' Training Corps, University of Southern California.

3-32. The markings prescribed in paragraphs 3-29. and 3-30. will be attached on the rear of vehicles except metropolitan ambulances. No exterior markings will be used when marking metropolitan ambulances, except as specified in paragraph 3-20,, 3-35. and 3-37.

3-33. The markings required by paragraphs 3-29 through 3-32 will be applied utilizing 1-1/2" letters and numbers of the appropriate color specified in paragraphs 3-8 through 3-20.

3-34. Deleted.

3-35. DECALCOMANIAS.

a. DECAL - AIR NATIONAL GUARD. A five inch decal will be displayed on ANG vehicles. The decal will be centered immediately above the agency identification "US AIR FORCE" on each side of all vehicles except M151 jeeps. The decal will be centered on the body cowling to the rear of front fenders on each side of the M151 jeeps. Decals may be requisitioned in accordance with instructions published by the National Guard Bureau. The state name will be placed immediately above the Air National Guard decal.

b. Decal - KPH to MPH. A decal for converting kilometers per hour to miles per hour will be used on military vehicles operating out of the United States. Place the decal on the instrument panel, in easy view of the operator.

SAMPLE:

KPH	MPH	KPH	MPH
20	12	70	44
30	19	80	50
40	25	90	56
50	31	100	62
60	37	110	68

c. Decal - Tower Signals for Control of Airdrome Traffic. A decal, sample copy below, shall be applied to the dash panel or header above the windshield in easy view of operator.

SAMPLE:

TOWER SIGNALS FOR CONTROL OF AIRDROME TRAFFIC

STEADY GREEN	CLEARED TO CROSS
STEADY RED	STOP
FLASHING RED	CLEAR ACTIVE RUNWAY
FLASHING WHITE	RETURN TO STARTING POINT
RED & GREEN	GENERAL WARNING EXERCISE EXTREME CAUTION

d. Additional Decals. Any additional informational or instructional type decals deemed necessary, i.e., booster battery cable hook-up, may be applied at the discretion of operating officials.

3-36. SPECIAL MARKINGS.

3-37. Special markings prescribed herein are in addition to vehicle markings described in the preceding paragraphs unless otherwise specified.

NOTE

The sizes of the letters and numbers will comply with the specifications given in the remaining paragraphs of this technical order.

3-38. VEHICLES USED IN TRANSPORTING SICK AND INJURED. Vehicles used in transporting sick and injured will be marked according to paragraphs 3-39 through 3-43 and as illustrated in figures 4-9 through 4-11. All red and orange cross emblems will be premasked with a low tack translucent carrier tape.

NOTE

On metropolitan, Station Wagon and Field type ambulances the word "AMBULANCE" in mirror image shall be centered approximately 1 inch above the windshield utilizing 1-1/2 inch letters. On van type emergency ambulances the legend shall be applied as illustrated in figure 4-9B utilizing 3 inch letters. On ambulances painted white the legend shall be applied in black reflective letters and on ambulances painted blue the legend shall be applied in silver reflective letters.

3-39. Automobile, Ambulance (Metropolitan).

a. A premasked reflectorized decal with a 3 inch Omaha orange cross on a 4 inch square white field shall be applied 1 inch above the left and right corners of the windshield.

b. A premasked reflectorized decal with a 6 inch Omaha orange cross on an 8 inch square white field shall be applied on the center of the rear door panel directly below the 6 inch orange stripe. The legend AMBULANCE in 3 inch black reflective letters shall be applied immediately below the cross. If space is not adequate, two reflective decals with 3 inch Omaha orange crosses on a 4 inch square white field may be applied on each side of the door above the window. The legend AMBULANCE in 3 inch black reflective letters shall be centered between the two crosses.

c. A premasked reflectorized decal with a 6 inch Omaha orange cross will be applied on the rear side window on each side of the vehicle. The word "AMBULANCE" in 3 inch black reflective letters will be applied directly below the cross.

d. A premasked reflectorized decal with an 18 inch Omaha orange cross on a 24 inch square white field will be applied on the roof in a central location.

3-39A. AMBULANCE (VAN/MODULAR TYPE COMMERICAL) 4 x 2 AND 4 x 4 PAINTED WHITE).

a. A premasked reflectorized decal with a 6 inch Omaha orange cross on an 8 inch square white field shall be centrally located on the hood panel. The word "AMBULANCE" in mirror image shall be applied directly below the cross in 3 inch black reflective letters. The word AMBULANCE in mirror image may be applied in Bilingual on the hood panel of van ambulances provided space is available to accomodate present orange crosses and the word AMBULANCE in Bilingual and English. The addition of the word AMBULANCE in the local language will be accomplished only when the integrity of the present emblems and markings can be maintained.

b. A premasked reflectorized decal with a 6 inch Omaha orange cross on an 8 inch square white field shall be applied on the upper rear side panel on each side of the vehicle in a central position. The word "AMBULANCE" in 3 inch black reflective letters shall be applied directly below the cross.

c. The word "AMBULANCE" in 3 inch black reflective letters shall be centered on the rear doors directly below the 6 inch orange stripe.

A premasked reflectorized decal with a 3 inch Omaha orange cross on a 4 inch square white field shall be placed on outside edge of each door.

d. A premasked reflectorized decal with an 18 inch Omaha orange cross on a 24 inch square white field will be applied to the roof in a central location.

3-40. Ambulance, Commercial, Field, 4 x 4, and Ambulance, 4 x 4.

a. A premasked reflectorized decal with a 6 inch red cross on an 8 inch square white field will be applied 1 inch above the left and right corners of the windshield.

3-39B. AMBULANCE (VAN/MODULAR) 4 x 2 AND 4 x 4 PAINTED SEMI-GLOSS GREEN.

a. The word "Ambulance" in mirror image in 3 inch reflectorized black letters shall be placed on the front center of the hood.

b. Two reflectorized decals with a 3 inch red cross on a four inch square white field will be placed one on each side of the word "Ambulance" at approximately 6 inches from the first and last letters.

c. The side markings shall consist of the word "Ambulance" in 3 inch black reflectorized letters centered on the side of the body underneath the centered reflectorized decal with an 18 inch red cross on a 24 inch square white field.

d. The rear markings shall consist of a reflectorized decal with an 18 inch red cross on a 24 inch square white field centered on the rear doors and the word "Ambulance" in 3 inch black reflectorized letters centered under the red cross.

e. The roof markings shall consist of a reflectorized decal with an 18 inch red cross on a 24 inch white square centrally located on the roof panel.

NOTE

The red crosses specified in paragraph 3-39B shall be gloss red matching chip number 11136 of Federal Standards 595.

NOTE

On all type ambulances, where space permits, the word "AMBULANCE" in 1-1/2 inch letters will be centered approximately 1 inch above the windshield utilizing silver reflective letters on a red background.

3-39. Automobile, Ambulance (Metropolitan).

a. A premasked reflectorized decal with a 3 inch red cross on a 4 inch square white field will be applied 1 inch above the left and right corners of the windshield.

b. A premasked reflectorized decal with a 6 inch red cross on an 8 inch square white field will be applied on the center of the rear door panel directly below the window and above the U.S. Air Force marking. If space is not adequate, two reflectorized decals with 3 inch red crosses on 4 inch square white field may be applied one on each side of the door on lower portion of the body.

3-40. Ambulance, Commercial, Field, 4 x 4, and Ambulance, 4 x 4.

a. A premasked reflectorized decal with a 6 inch red cross on an 8 inch square white field will be applied 1 inch above the left and right corners of the windshield.

b. A premasked reflectorized decal with a 6 inch red cross on an 8 inch square white field will be centered below the windows, applied on the lower portion of each rear door.

c. A premasked reflectorized decal with a 36 inch red cross on a 48 inch square white field will be applied on the right and left side panels in a central position.

d. A premasked non-reflectorized decal with a 36 inch red cross on a 48 inch square white field will be applied on the roof in a central location.

e. When authorized by the Major Command, large identification numbers or letters may be placed on field ambulances for vehicle control in crash, disaster, or other emergency situations. Numbers or letters will be on placards of sufficient size to ensure ready identification of the vehicle by control officers. Placards will be of a design which allows ready installation and removal.

3-41. Bus, 44 Passenger, Convertible (Multi-letter).

a. The marking "Ambulance," 3-inch high, direct prespaced, silver reflective letters will be centered in the routing view box above the windshield.

b. A premasked reflectorized decal with a 3-inch red cross on a 4-inch square white field will be applied in line with the word "AMBULANCE" to the left and right corners of the routing view box above the windshield.

c. A premasked reflectorized decal with a 36-inch red cross on a 48-inch square white field will be applied on each side of the vehicle below the windows in a central location.

d. A premasked reflectorized decal with an 18-inch red cross on a 24-inch square white field will be applied on the rear of the bus in a central location.

3-42. Automobile, Station Wagon. Station wagons which have been converted for use in lieu of metropolitan ambulances by installation of wheel litter attachments will be marked as follows:

a. A premasked reflectorized decal with an 8-inch red cross on a 10-3/4-inch square white field will be applied to the center of each rear side door.

b. A premasked reflectorized decal with a 6-inch red cross on an 8-inch square white field will be applied on the center of the tail gate. If space is inadequate for the single large decal, two reflectorized decals with a 3-inch red cross on a 4-inch square white field will be applied to the upper corners of the tailgate immediately below the rear window of the vehicle.

3-43. MOBILE MEDICAL VANS. Special purpose semi-trailers used as mobile dispensaries, dental clinics, and other primary medical functions, will be marked as follows:

a. A premasked reflectorized decal with a 36-inch red cross on a 48-inch square white field will be applied on the right, left front and rear external panels in a central position.

b. A premasked non-reflectorized decal with a 36-inch red cross on a 48-inch square white

field will be applied to the roof in a central location.

3-44. RECRUITING VEHICLES. Markings for Air Force vehicles assigned to recruiting service are as follows:

a. Emblem will be a reflectorized decalcomania, 12 inches in diameter, with colors as specified in paragraph 3.f. of Air Force Regulation 11-10.

b. The emblem will be centered horizontally 6 inches below the top of the front door panel. Emblems that cannot be placed as described above due to varying body styles, will be applied to vehicles as determined by instructions issued by the Commander of the USAF, Recruiting Service.

c. Registration Number - Block type 1-1/2 inches high reflective silver numerals and letters located approximately 1 inch below the recruiting service emblem.

d. The legend "FOR OFFICIAL USE ONLY" 3/4 inch high, block type, silver reflective letters on 1-1/2-inch wide blue background, centered below registration number with approximately 1 inch between silver letter lines.

e. Rear markings "US AIR FORCE" and "Registration Number" - 1-1/2-inch high block type, silver reflective letters and numerals with "US AIR FORCE" and "Registration Number" on two lines with approximately 1 inch between silver letter lines.

f. Rear markings for pickup trucks will be applied as illustrated in figure 4-6, using 1-1/2-inch reflective silver letters and numerals.

g. Recruiting decalcomanias will be centrally procured by Headquarters, USAF Recruiting Service, Randolph Air Force Base, Texas.

3-45. COMMUNICATIONS AND GROUND CONTROL APPROACH VEHICLES. Bodies of van type vehicles and those vehicluar types which are components of AGE sets/systems containing communication and ground control approach equipment and located or operated on landing areas, runways, and taxiways, will be painted with the conventional "checkerboard" markings on alternate blocks of Aviation orange and white as illustrated in figures 4-33 and 4-34. The size of the checkerboard blocks will be such that there will be not less than four, nor more than six longitudinal rows. This pattern of marking will be applied to the antenna housing, roof, sides, rear and frontal area which is unobstructed by the vehicular cab. Chassis and cabs will be painted yellow, color number 13538. All van type radar and flight control sets having rotating search antennas mounted on the roof will have a circular 3 inch wide strip of red reflectorized tape, conforming to specification LS-300, applied just outside the area covered by the antenna during rotation. The following statement will be stenciled, using a contrasting color enamel, just outside this area in such a position that it can be read by personnel approaching the area from the mounted ladder:

WARNING

SEARCH REFLECTOR SCAN AREA. INSURE THAT SAFETY SWITCH S-13405 IS IN SAFE POSITION BEFORE ENTERING THIS AREA.

3-46. TRACTORS AND FORKLIFTS.

a. Tractors, other than truck-tractors and aircraft towing tractors, will be marked using figure 4-12 as a guide.

b. Forklifts will be marked using figure 4-13 as a guide.

3-47. TIRE INFLATION PRESSURES.

a. The correct operating tire pressures will be marked on the left front pillar post between the upper and lower door hinges of vehicles so equipped. On other type vehicles, the operating tire pressure will be marked on the shields, panels, and frames, immediately adjacent to the tires.

b. Size of letters will be 1/2 inch high, and they will be of the applicable color, as indicated in paragraph 3-8. Abbreviate the words "tire pressure." Example: T.P. 70.

3-48. SCHOOL BUS SAFETY MARKINGS. The variation in state law requirements for special markings for special types of vehicles prohibits the establishment of uniform instructions for this class of markings in detailed form. Safety markings for

school buses will be applied to conform to local state regulations. Distinctive colors may be applied to the complete vehicle when required by state regulation. Where state laws do not prescribe school bus safety markings, the provisions of this section will be considered minimum requirements.

3-49. D.O.T. MOTOR CARRIER SAFETY REGULATION MARKINGS.

a. Vehicles transporting explosives or other dangerous articles off base will be marked in accordance with Table 3-1. Table 3-1 and all instructions pertaining to same, as well as those portions of figures 4-17, 4-19, 4-20, 4-21, 4-22, and 4-26 as indicated, apply only to those vehicles operating within the jurisdiction of D.O.T. Regulations. The variation in safety and/or special marking requirements of foreign nations prohibits the establishment of uniform instructions for this type markings in detail form. Therefore, safety markings as required and conforming with local laws of the host country and the provisions of any international agreement will apply. The requirement for bilingual stenciling of safety markings will be at the discretion of the major command.

b. Vehicles transporting Explosives A and Explosives B shall be marked utilizing placards cited in Table 3-1.

c. Markings shall be displayed at the front, rear and each side of the vehicle in an area which has no other marking, lettering or graphic display for at least 3 inches in each direction, except as specified in paragraphs 3-49.d. and 3-49.g. The front marking may be displayed on the front of either the truck, truck body, truck-tractor, or the trailer.

d. Vehicles transporting more than one kind of dangerous article requiring different markings under the provisions of paragraph 3-49.a., the aggregate gross weight of which totals 1,000 pounds or more, shall be marked "DANGEROUS" instead of being marked as required by that paragraph. Any such vehicle which contains any quantity of poison, Class A or radioactive material requiring red label shall display the marking POISON or RADIOACTIVE in addition to the marking DANGEROUS. Vehicles transporting Explosives A and Explosives B shall display only the marking Explosive A.

e. Tank motor vehicles or tank trailers used for transportation of any explosive or other dangerous article, regardless of quantity or whether loaded or empty, shall be marked accordingly. Specifications for placard markings are as follows:

(1) The print type on each placard must be Franklin Gothic Condensed.

(2) Each square-on-point placard must measure 10 3/4 inches (273.0 mm) on each side, the outer 1/2 inch (12.7 mm) of which must be white.

NOTE

Measurements in these specifications may be rounded to the nearest 1/32 of an inch and to the nearest whole millimeter.

Table 3-1. D.O.T. Markings.

TYPE CARGO	MARKING
Explosives, Class A (any quantity or combination of Class A and Class B)	EXPLOSIVES A: The word "EXPLOSIVES" must be across the center area of the placard, made with letters 1-7/8 inches (47.6 mm) high with 5/16 inch (7.9 mm) stroke. The top of the letters "EXPLOSIVES" must be 1 1/2 inches (38.1 mm) above placard horizontal center line. The top of the letter "A" must be 1/2 inch (12.7 mm) below the horizontal center line. The letter "A" must be approximately 2 inches (50.8 mm) high. The base of the symbol must be 2 1/2 inches (52.4mm) above the placard horizontal center line and must be 4 1/2 inches (114.3mm) high when measured from a horizontal line touching the lowest extremity. The width of the symbol must be 7-7/8 inches (200.0mm) when measured between two lines perpendicular to the base line and touching the widest extremities on each

Table 3-1. D.O.T. Markings. (Continued)

TYPE CARGO	MARKING
	side. The radius of the bomb must be 3/4 inch (19.1mm). The placard color must be orange, black, and white.
Explosives, Class B	EXPLOSIVES B: Except for the letter "B", the Explosives "B" placard specifications are the same as those for the Explosives "A" placard. The location, height, and stroke for the letter "B" are the same as those prescribed for the letter "A".
Poison, Class A	POISON GAS: The word "POISON" must be across the center area of the placard with the word "GAS" centered beneath the word poison. The letters in both words must be 2-3/16 (55.5mm) high and made with a 13/32 inch (10.3 mm) stroke. The top of the letters in the word "POISON" must be 2 1/4 inches (57.1mm) above the horizontal center line. The lowest part of the symbol must be 2-3/4 inches (69.8 mm) above the horizontal center line and must be 3 1/4 inches (82.5mm) high and 4-5/16 inches (109.5 mm) across the widest extremities. The 1/8 inch (3.2mm) black border must be 1/2 inch (12.7mm) in from the placard edge. The placard color must be black and white.
Flammable, Solid (Dangerous when when wet label only)	FLAMMABLE SOLID W: The specifications for the flammable solid W are the same as the specifications for the flammable solid placard except for the top triangle. The

Table 3-1. D.O.T. Markings. (Continued)

TYPE CARGO	MARKING
	base of the blue triangle must be 2 inches (50.8 mm) above the placard horizontal center line with the base of the symbol 2-3/8 inches (60 3mm) above the placard horizontal center line. The symbol must be 2 1/4 inches (57.1 mm) high; 2 3/4 inches (69.8mm) across top, 1 3/4 inches (44.4mm) across the base, and made with a 5/16 inch (7.9mm) stroke. The white stripe in the symbol must be 7/32 inch (5.5mm) wide and 3 1/2 inches (88.9 mm) long. The white stripe must slant upward from right to left at an angle of approximately 21 degrees from the horizontal.
Radioactive Material	RADIOACTIVE: The word "RADIOACTIVE" must be centered on the placard horizontal center line in letters 2 inches (50.8mm) with an 11/32 (8.7mm) stroke. The lower edge of the yellow triangle must be 1 1/2 inches (28.6mm) above the placard horizontal center line. The lower edge of the symbol must be 1 1/4 inches (31.7mm) above the placard horizontal line. The lower white area must have a 1/8 inch (3.2mm) black solid line border extended from the edge of the yellow area to indicate the outer 1/2 inch (12.7mm) white placard corder. The placard color must be yellow, black and white.

Table 3-1. D.O.T. Markings. (Continued)

TYPE CARGO	MARKING
Explosives, Class C	FLAMMABLE: The word "FLAMMABLE" must be centered on the placard horizontal center line. The letters in the word flammable must be 2 inches (50.8mm) high and made with 11/32 (8.7mm) stroke. The base of the symbol bar must be 3 1/2 inches (57.1mm) above the placard horizontal center line. The symbol must be 4-9/16 inches (115.9 mm) high and 3-5/16 inches (84.1mm) wide. The bar must be 1/8 inch (3.2mm) wide and 3-5/16 inches (84.1mm) long. The outer 1/2 inch (12.7 mm) of the 10-3/4 inches (273.0mm) square-on-point placard must be white.
Non-Flammable Gas	NON-FLAMMABLE GAS: The word "NON-FLAMMABLE" must be across the center area with the word "GAS" centered beneath the word "NON-FLAMMABLE." The letters in both words must be 1-9/16 inches (39.6mm) high and made with a 9/32 inch (7.1mm) stroke. The top of the letters in the words "NON-FLAMMABLE" must be 1-3/8 inches (35.9mm) above the placard horizontal center line, and the top of the letters in the word "GAS" must be 9/16 inch (14.3mm) below the placard horizontal center line. The base of the symbol must be 3-1/8 inches

Table 3-1. D.O.T. Markings. (Continued)

TYPE CARGO	MARKING
	(79.3mm) above the horizontal centerline with the top 4-15/16 inches (125.4 mm) above the placard horizontal center line. The lower portion of the cylinder (Symbol) must be 17/32 inch (13.5mm) wide with the neck 3-9/16 inches (90.4mm). The placard color must be green and white.
Non-Flammable Gas (Chlorine)	CHLORINE: The specifications for the chlorine placard are the same as for the poison gas placard except for the word Chlorine and the symbol. The word "CHLORINE" must be centered on the placard horizontal center line in letters 2 1/2 inches (63.5mm) high and made with a 7/16 inch (11.1 mm) stroke. The lowest part of the symbol must be 1-3/4 inches (44.5mm) above the placard horizontal center line. The symbol must be 9-11/16 inches (93.6mm) high and 5-1/8 inches (130.2mm) across the widest extremities.
Non-Flammable Gas (Fluoride)	POISON: The word "POISON" must be centered on the placard horizontal center line in letters 3-1/16 inches (77.8 mm) high and made with a 9-1/16 inch (14.3mm) stroke. The lowest point on the symbol must be 2-1/8 inches (54.0mm) above the placard horizontal center line. The symbol must be 3-11/16 inches (93.6mm) high and 4-15/16 inches (125.4mm)

Table 3-1. D.O.T. Markings. (Continued)

TYPE CARGO	MARKING
	across the widest extremities. The 1/8 inch (3.2 mm) black border must be 1/2 inch (12.7mm) in from the placard edge. The placard color must be black and white.
Non-Flammable Gas (Oxygen)	OXYGEN: The word "OXYGEN" must be centered on the placard horizontal center line in letters 2 1/2 inches (63.5 mm) high and made with a 7/16 inch (11.1mm) stroke. The base of the bar in the symbol must be 2-1/16 inches (52.4 mm) above the placard horizontal center line. The overall height of the symbol must be 4-5/16 inches (109.5mm) with the bar measuring 1/8 inch (3.2mm) wide and 3-3/16 inches (55.5mm) long.
Flammable Gas	FLAMMABLE GAS: The word "FLAMMABLE" must be across the placard center with the word "GAS" centered beneath the word flammable. The letters in both words must be 2 inches (50.8mm) high and made with a 3/8 inch (9.5mm) stroke. The top of the letters in the word "FLAMMABLE" must be 1-5/8 inches (41.3mm) above the placard horizontal center line and the top of the word "GAS" must be 5/8 inch (15.9mm) below the placard horizontal center line. The base of the symbol bar must be 2 1/4 inches (57.1mm) above

Table 3-1. D.O.T. Markings. (Continued)

TYPE CARGO	MARKING
	the placard horizontal center line, and must be 4-17/32 inches (115.1 mm) high and 3-15/16 inches (84.1mm) wide. The bar must be 5/32 inch (4.0mm) wide and 3-5/16 inches (84.1mm) wide. The bar must be 5/32 inch (4.0mm) wide and 3-5/16 inches (84.1 mm) long. The outer 1/2 inch (12.7mm) of the 10-3/4 inches (273.0 mm) square-on-point placard must be white. The placard color must be red and white.
Combustible Liquid	COMBUSTIBLE: Specifications for the "COMBUSTIBLE" placard are the same as those prescribed for the "FLAMMABLE" placard except the letters in the word "COMBUSTIBLE" must be 1-7/8 inches (47.6 mm) high and made with an 11/32 inch (8.7 mm) stroke.
Flammable Liquid	FLAMMABLE: The word "FLAMMABLE" must be centered on the placard horizontal center line. The letters in the word flammable must be 2 inches (50.8 mm) high and made with an 11/32 inch (8.7mm) stroke. The base of the symbol bar must be 2 1/4 inches (57.1mm) above the placard horizontal center line. The symbol must be 4-9/16 inches (115.9mm) high and 3-5/16 inches (84.1mm) wide. The bar must be 1/8 inch (3.2mm) wide and 3-5/16 inches (84.1

Table 3-1. D.O.T. Markings. (Continued)

TYPE CARGO	MARKING
	mm) long. The outer 1/2 inch (12.7mm) of the 10-3/4 inches (273.0mm) square-on-point placard must be white.
Flammable, Solid	FLAMMABLE SOLID: The word "FLAMMABLE" must be across the center of the placard with the word "SOLID" centered beneath the word "FLAMMABLE". The letters in the word "FLAMMABLE" must be 2 inches (50.8mm) high and made with a 3/8 inch (9.5mm) stroke. The letters in the word "SOLID" must be 1 1/2 inches (38.1mm) high and made with a 1/4 inch (6.3mm) stroke. The top of the letters in the word "FLAMMABLE" must be 1-3/16 inches (30.1mm) above the placard horizontal center line, and the top of the word "SOLID" must be 1 inch (25.5mm) below the placard horizontal center line. The base of the symbol bar must be 2 1/4 inches (57.1mm) above the placard horizontal center line. The symbol must be 4-9/16 inches (115.9mm) high and 3 5/15 inches (84.1 mm) wide. The outer 1/2 inch (12.7mm) of the 10-3/4 inches (273.0mm) square-on-point placard must be white. Each red and white stripe must be approximately 1 inch (25.4mm) wide. The placard must have seven red stripes and six white stripes. One red stripe

Table 3-1. D.O.T. Markings. (Continued)

TYPE CARGO	MARKING
	must be approximately centered on the vertical center line of the placard. The placard color must be black, white and red.
Oxidizer	OXIDIZER: The word "OXIDIZER" must be centered on the placard horizontal line in letters 2 1/2 inches (63.5mm) high with a 15/32 inch (11.9mm) stroke. The base of the bar of the symbol must be 2-1/16 inches (52.4mm) above the placard horizontal center line. The overall height of the symbol must be 4-5/16 inches (109.5mm) with the bar measuring 1/8 inch (3.2mm) wide and 2-3/16 inches (55.6mm) long. The symbol must be 2-3/8 inches (60.3 mm) across the widest part. The outer 1/2 inch (12.7mm) of the 10-3/4 inchs (273.0mm) must be white. The placard color must be yellow, black and white.
Organic Peroxide	ORGANIC PEROXIDE: The word "ORGANIC" must be across the center line of the placard with the word "PEROXIDE" centered beneath the word "ORGANIC." The letters in both words must be 2 inches (50.8 mm) high and made with an 11/32 inch (8.7 mm) stroke. The top of the letters in the word "ORGANIC" must be 2-1/8 inches (54.0mm) above the placard horizontal cen-

Table 3-1. D.O.T. Markings. (Continued)

TYPE CARGO	MARKING
	ter line, and the top of the letters in the "PEROXIDE" must be 5/8 inch (7.9mm) below the placard horizontal center line. The base of the symbol bar must be 2-7/8 inches (73.0mm) above the horizontal center line. The symbol must be 3-11/16 inches (93.6mm) high and 2-1/16 inches (52.3mm) wide with the bar 3/16 inch (4.8mm) wide and 1-7/8 inches (47.6mm) long. The outer 1/2 inch (12.7mm) of the 10-3/4 inches (273.0 mm) square-on-point placard must be white. The placard color must be yellow, black, and white.
Poison, Class B	POISON: The word "POISON" must be centered on the placard horizontal center line in letters 3-1/16 inches (77.8mm) high and made with a 9/16 inch (14.3 mm) stroke. The lowest point on the symbol must be 2-1/8 inches (54.0mm) above the placard horizontal center line. The symbol must be 3-11/16 (93.6mm) high and 4-15/16 inches (125.4mm) across the widest extremities. The 1/8 inch (3.2 mm) black border must be 1/2 inch (12.7mm) in from the placard edge. The placard color must be black and white.

Table 3-1. D.O.T. Markings. (Continued)

TYPE CARGO	MARKING
Corrosive Material	CORROSIVE: The word "CORROSIVE" must be across the center of the placard and made with letters 2-1/16 inches (52.4mm) high with an 11/32 inch (8.7mm) stroke. The base of the top white triangle must be 1 1/2 inches (38.1mm) above the placard horizontal center line. The lowest part of the symbol must be 1-5/8 inches (41.3mm) above the placard horizontal center line. The height of the symbol measured from a horizontal line extended from the lowest part of the symbol must be 3 1/4 inches (82.5mm) and the width across the widest part must be 7-3/8 inches (187.3mm). The upper white area must have a 1/8 (3.2mm) black solid line border as an extension from the edge of the black area to indicate the outer 1/2 inch (12.7mm) white placard border. The placard color must be black and white.
Irritating Material	DANGEROUS: The word "DANGEROUS" must be across the center of the placard and made with letters 2-7/32 inches (56.4mm) high with a 3/8 inch (9.5mm) stroke. The white section of the

Table 3-1. D.O.T. Markings. (Continued)

TYPE CARGO	MARKING
	placard must be centered across the placard and 5 inches (127mm) wide. The two ends of the white area must have an 1/8 inch (3.2 mm) red solid line border to indicate the outer 1/2 inch (12.7 mm) placard border. The placard color must be red, white, and black.

f. Tank motor vehicles transporting compressed gas, flammable or non-flammable, shall additionally display the common name of the contents (i.e. oxygen, nitrogen) in 3 inch high letters, in the same colors specified for the cargo.

g. Vehicles transporting cargo that is not compatible with water (i.e. jet fuel, AVGAS, oil, etc.) will display "Flammable" placard.

h. The markings, as specified by paragraph 3-49.a. shall be removed from or covered on the vehicle when the vehicle does not contain the cargo for which the marking is required, except in the case of tank motor vehicles and tank trailers used exclusively for transporting the cargo for which such markings are required.

i. Materials required for accomplishing the preceding markings are listed in Section V, paragraph 5-1.b. Removable type markings (placards) shall be locally devised by applying the markings as furnished by this technical order to a hard backed material (i.e., sheet metal, plixiglass, wood, etc.). Method of attaching removable markings to the vehicle shall be determined by the Vehicle Maintenance/Transportation Officer at each activity.

3-50. FUEL DISPENSING AND AIRCRAFT SERVICING VEHICLES. Special markings are required on fuel and oil servicing trucks and trailers to minimize the possibility of replenishing aircraft fuel or oil systems with an improper grade of fuel or oil. Precautionary markings are also required to provide sufficient warnings on these vehicles to indicate the safe handling of flammable liquids. Markings for new fuel and oil dispensing vehicles procured in the future will be applied in a manner as near as possible to those illustrated herein. The following instructions are furnished for application of markings to vehicles as indicated.

3-51. NO SMOKING WITHIN FIFTY FEET.

a. A strip of red reflectorized tape, 10 inches wide with "NO SMOKING WITHIN 50 FT" in 4 inch silver letters shall be applied on the sides of semitrailers. Refer to figure 4-17.

b. On fuel or oil servicing trucks and semitrailers, apply a strip of red reflectorized tape, 5 inches wide with "NO SMOKING WITHIN 50 FT" in 4 inch silver letters. Refer to figure 4-20.

c. Two-wheel trailers will be marked on each side of the tank with "NO SMOKING WITHIN 50 FT" in 3 inch silver letters on a red reflective background.

3-52. DELETED.

3-53. PRODUCT IDENTIFICATION.

a. Place the word "AVGAS," "JET FUEL," "OIL ACFT ENG," "DIESEL FUEL," "KEROSENE," "MOGAS," whichever is applicable on the rear and both sides of tank. Markings will be of reflectorized tape. "AVGAS 115/145 F22" will be applied in silver reflective letters with a purple background. "JET FUEL JP4" and all other markings will be applied in silver reflective letters with a red background. Use 6 inch letters on all semitrailers and trucks with a capacity of 1,500 gallons or more, 4 inch letters on trucks with less than 1,500 gallons capacity and 3 inch letters on two-wheel trailers.

b. Numerals identifying the grade of gasoline or type of oil will be added immediately after the word AVGAS or OIL in sizes prescribed for letters in the preceding paragraph. Example: AVGAS 115/145, Oil - Type II,MIL-L-22851, or JET FUEL - JP4.

c. When converting a unit from one type product to a different type product, all markings will be changed to correspond with the product to be dispensed.

d. The appropriate NATO symbol, as outlined in T.O. 42B1-1-15, will be applied to each

side of aviation fuel and oil servicing vehicles immediately below the product identification. The appropriate NATO symbol shall also be applied to the rear of aviation fuel and oil servicing vehicles where space permits. Symbols will be same size and color as product identification markings.

e. Water - Alcohol servicing vehicles. The words "WATER - ALCOHOL" in 6 inch silver letters on a 7 inch red reflective background will be centered vertically and horizontally on the left and right sides of the tank and rear of the vehicle. The type mixture (reference TO 2-1-14) will be added immediately below the words "WATER - ALCOHOL" at all three locations using the same size and color letters and numbers. A black chevron, color number 17038 of the size indicated in the following example. The appropriate water-alcohol NATO symbol as outlined in TO 42B1-1-15, will be applied to a conspicuous location on the rear and both sides of the vehicle in 1/2 inch letters and numbers.

EXAMPLE:

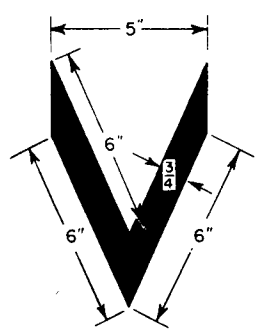

WATER-ALCOHOL NATO SYMBOL S-738

Water-Alcohol servicing vehicles will have the following taped on each manhole cover or adjacent to the cover:

WARNING

TRANSFER FROM LINE OR CONTAINER IDENTIFIED BY NAME OF ALCOHOL REQUIRED. REFER TO TO 2-1-14 AND TO 36A9-3-12-1 FOR WATER-ALCOHOL MIXING AND TESTING DATA.

On those vehicles where space is restrictive on the rear of the tank (i. e., ML-1, 600 Gal.) the size of the rear WATER-ALCOHOL decal may be reduced. The marking will then be applied utilizing the individual letters listed in Section V of this technical order.

f. Demineralized Water Trucks. The words "DEMINERALIZED WATER" in 6 inch silver letters on a 7 inch red reflective background will be centered vertically and horizontally on the left and right sides of the tank and on the rear centered approximately 8 inches from the top of the tank. The words "CAUTION - WATER NOT FIT FOR DRINKING" in 4 inch block type letters will be stencilled, using black paint, color number 17038, directly below the words "DEMINERALIZED WATER" at all three locations.

g. POTABLE WATER TRUCKS: The words "POTABLE WATER" in 3 inch silver reflective letters on a red background will be centered vertically and horizontally on each side and rear of the tank.

h. F/FB-111 ENVIRONMENTAL SYSTEM TRUCKS. The words "F/FB-111 ENVIRONMENTAL FLUID" in 3 inch silver letters on a red background will be centered vertically and horizontally on the left and right sides of the tank and on the rear, centered approximately 12 inches from the top of the tank. The words "CAUTION-WATER NOT FIT FOR DRINKING" in 1 inch block type letters will be stenciled, using black paint, color number 17038, directly below the words "F/FB-111 ENVIRONMENTAL FLUID" at all three locations.

3-54. PUMPING DURING COLD TEMPERATURES.

a. The marking "OPEN MANHOLE COVER WHEN PUMPING FUEL OIL OR WATER AT TEMPERATURES BELOW 25 DEGREES F" will be placed on all fuel, oil and water dispensing units except refuelers with power operated vents and an interlock system that prevents fuel from being pumped out of the pumping system tank unless the vent is open, such as the R-5 refueler. Marking will be placed in an area as near as possible to the pump compartment. Marking will be 2 inch silver letters on a reflective red background.

b. On two-wheel trailers, the marking as indicated in the preceding paragraph will be centered on the lower half of tank.

3-55. MANHOLE COVER AND NOZZLE MARKINGS. Application and size of manhole cover and nozzle markings. These markings shall be applied to all manhole covers and nozzles on aviation and rocket fuel and oil dispensing units. Oil dispensing units may be marked by stencilling with black paint, color number 17038 or using reflectorized markings listed in Section V, paragraph 5.1.b. (Reference figure 3-1 and 3-2.) Jet fuel and AVGAS dispensing units will be marked as follows:

a. JET FUEL DISPENSING UNITS - Manhole cover and nozzle markings on jet fuel dispens-

ing units shall be applied utilizing a red background with silver letters and numbers as illustrated in figures 3-1 and 3-2.

b. AVGAS DISPENSING UNITS - Manhole cover and nozzle markings on AVGAS dispensing units shall be applied utilizing a purple background with silver letters and numbers as illustrated in figures 3-1 and 3-2.

(1) TYPE PRODUCT - JP-4, JP-5, AVGAS 115/145, etc.

(2) PRODUCT SYMBOLS:

A filled, four pointed, silver star on a red background represents Jet Fuel.

A filled, four pointed, silver star on a purple background represents AVGAS.

A filled, four-pointed, black star and a filled black crescent represents rocket fuel.

A filled black square represents lubricating oil.

c. NATO Symbol: Refer to T.O. 42B1-1-15 for these symbols. Examples JP-4 fuel is F-40, and AVGAS 100-130 is F-18.

3-55A. HYDRANT FUELING TRUCKS.

a. The following markings shall be displayed on both sides of all Hydrant Fueling Trucks:

"FLAMMABLE", 3-inch silver letters on a red background.

"NO SMOKING WITHIN 50 FT," 3-inch silver letters on a red background.

"JET FUEL JP4 F40", 4-inch silver letters on a red background.

"CARGO FIRE AVOID WATER", 2-inch red letters on a silver background.

b. The above markings will be applied on a panel locally fabricated from noncorrosive material, 62-inches by 24-inches. The panel will be centered on the rear of the vehicle between the fuel tank and the front hose reels. Refer to Figure 4-38.

NOTE

Markings presently applied to the Hydrant Fueling Trucks will not be changed until they are damaged or deteriorated to the point that replacement is necessary.

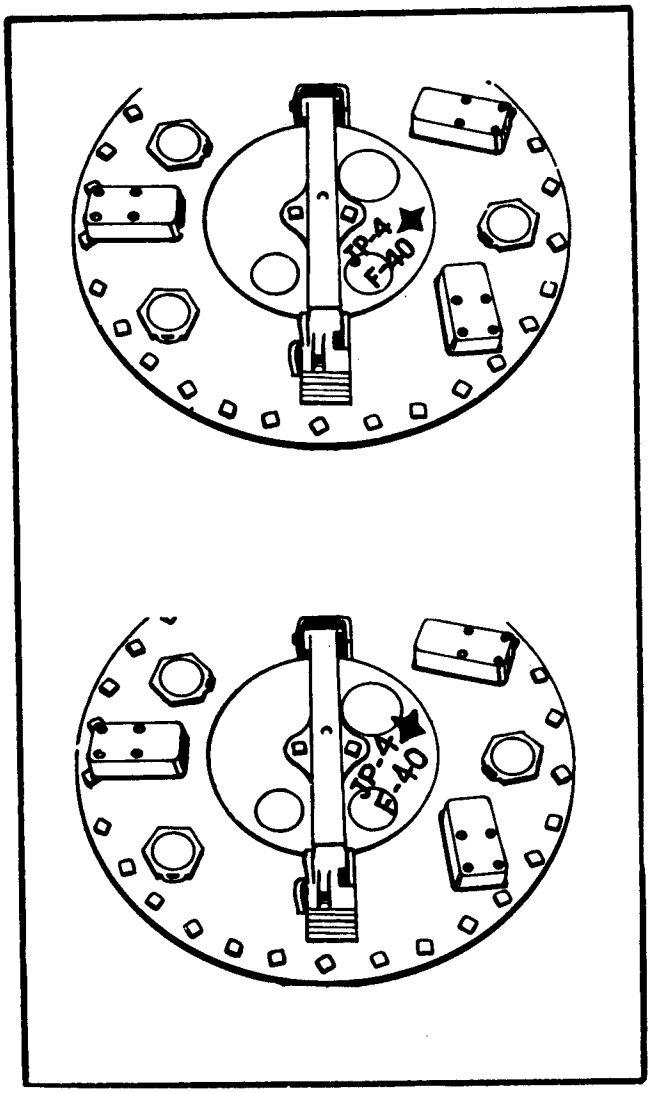

Figure 3-1. Manhole Cover Markings

3-55B. PURGING FLUID VEHICLES. Vehicles utilized for handling purging fluid shall be marked as follows:

a. The product marking PURGING FLUID shall be stenciled on both sides and rear of the tank in 6 inch black letters color number 17038 as illustrated in Figure 4-44.

b. The product marking PURGING FLUID shall be stenciled adajcent to the manhole covers in 1 inch black letters color number 17038.

c. The following statement shall be stenciled in 1 inch black letters color number 17038 on both sides of the tank immediately below the product marking.

CAUTION

DO NOT USE FOR ANY PURPOSE OTHER THAN PURGING FUEL TANKS.

d. All other safety markings required by this technical order shall be applied as illustrated in Figure 4-44.

3-55C. WASTE FUEL VEHICLES. All vehicles utilized for handling waste fuel shall be marked as follows:

a. The product marking WASTE FUEL shall be stenciled in 6 inch black letters color Number 17038 on both sides and rear of the tank as illustrated in Figure 4-45.

b. The product marking WASTE FUEL shall be stenciled in 1 inch black letters color number 17038 adjacent to the manhole covers.

c. A red X in 2 inch wide stripes shall be applied on hose reel compartment doors utilizing red paint color Number 11105 as illustrated in Figure 4-45.

3-55D. RECLAIMED FUEL VEHICLES. All vehicles utilized for handling recoverable or reclaimed fuel shall be marked as follows:

a. The product marking RECLAIMED FUEL shall be stenciled in 6-inch red letters (lusterless) color number 31136.

b. The product marking RECLAIMED FUEL shall be stenciled in 1-inch red letters (lusterless) color number 31136 adjacent to the manhole covers.

3-56. GASEOUS SERVICING TRAILERS. The following special markings will be applied to all gaseous oxygen or nitrogen trailers classified as vehicles in FSC 2330. (Not applicable to MH-1, MH-2, and AF/M32A17 tube bank semitrailers.)

a. Material Identification: For the purpose of this instruction, gaseous servicing trailers are divided into two categories. One employs an enclosure around the compressed gas cylinders such as the type E-3 and the MB-2. The other has no enclosure and all cylinders are exposed to plain view of the servicing personnel. On those trailers which employ an enclosure, the word OXYGEN or NITROGEN, as applicable, will be applied in 3 inch high letters on the control panel, immediately below or adjacent to the pressure regulator assembly. In addition, the word OXYGEN or NITROGEN, as applicable, will be applied in 3 inch letters on each side and near the top of the cylinder enclosure. On trailers which have no enclosure, all cylinders will be painted according to TO 42B5-1-2 for the material contained within the cylinders. Cylinders will be identified as indicated in TO 42B5-1-2 so that each cylinder will have the name of the gas contained within stencilled parallel to the longitudinal axis and on diametrically opposite sides in letters 1-3/4 to 2 inches high. White enamel will be used on both oxygen and nitrogen cylinders. Due to space limitations, no attempt will be made to mark control panel on this type trailer.

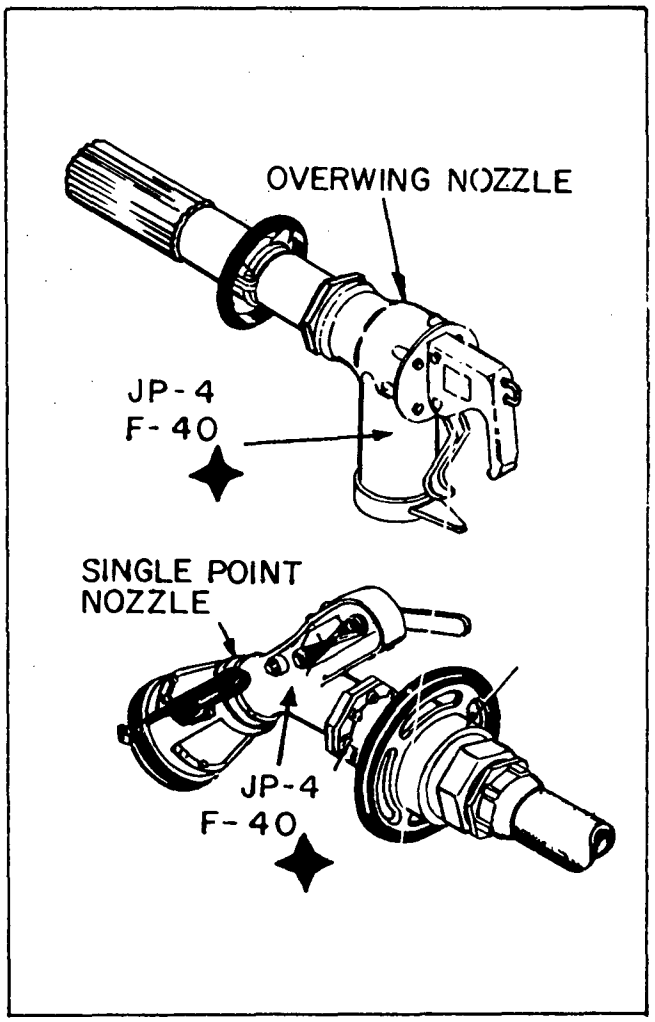

Figure 3-2. Nozzle Markings

b. Service Point Markings: Service point markings as prescribed by MIL Standard 33739 for oxygen and nitrogen will be applied by stencil to all delivery line nozzles using full gloss black paint, color number 17038, or by use of decals. Two horizontally filled rectangles represent oxygen. A filled square with a quarter arc removed from

each corner represents nitrogen. NATO CODES have not been assigned for oxygen or nitrogen and therefore are not applicable to these trailers. In addition to the filling point symbols, the word OXYGEN or NITROGEN, as applicable, will be stencilled with white enamel or applied with reflectorized tape on the hose immediately upstream of the servicing nozzle. Letters and symbols will be the largest size that the hose and nozzle will accommodate.

c. No Smoking: The words "NO SMOKING WITHIN 50 FT" in silver reflective letters on red reflective background, will be applied in 2 inch letters on each side of oxygen trailers having an enclosure around cylinders. Markings to oxygen trailers that do not have an enclosure will be at the discretion of the using command utilizing a locally fabricated plate marked as described above. Nitrogen trailers do not require "NO SMOKING" marking since nitrogen is an inert material.

3-57. Propellant Semitrailers: Semitrailer tankers, A/M32R-16 and A/M32R-17, will be marked as follows:

a. The type of material being transported N_2O_4 CLASS A POISON of UDMH HYDRAZINE CORROSIVE LIQUID will be applied to each side of the trailer. Marking shall consist of 6 inch high blue letters on a white background (Refer to Figures 4-26 and 4-26A).

b. NO SMOKING WITHIN 100 FEET in 6 inch silver reflective letters on a 14 inch wide red reflective background will be applied to each side of the tank as shown in Figures 4-26 and 4-26A.

c. N_2O_4 transporters shall display the marking OXIDIZERS in 4 inch yellow letters on a black background on the front and rear of the trailer and directly below the marking specified in paragraph 3-57.a.

d. N_2O_4 transporters shall also have DOT SP3121 applied to the right side of the tank near the front in 2 inch high letters and numbers on a contrasting background.

e. UDMH HYDRAZINE transporters shall display the markings UDMH on the front and rear and CORROSIVES on the front as shown in Figure 4-26.

f. The marking FLAMMABLE in 4 inch red letters on a silver background will be applied directly above the marking specified in paragraph 3-57.e. and on the front and rear as shown in Figure 4-26.

g. UDMH transporters shall also have the marking "DOT-SP-2828" applied to the right side of the tank near the front in two-inch high letters and numbers on a contrasting background.

h. N_2O_4 transporters shall be marked "INHALATION HAZARD" in 3½ inch letters on a contrasting background on all four sides near the flammable placard.

3-58. CRASH FIRE VEHICLES. The following special markings will be applied to crash-fire and rescue vehicles in order to identify the vehicles properly and to promote familiarity with the different types:

a. All crash-fire and rescue vehicles designated by an Air Force type will be so identified on the right and left forward sides of the vehicle utilizing silver reflective letters and numbers on a red background. The markings will be applied in accordance with figure 4-16, using 1½ inch letters for "US AIR FORCE," 1½ inch letters and numbers for registration number and 1½ inch letters and numbers for the vehicle type. The markings will be centered below window on left and right front cab-compartment doors. US AIR FORCE on first line and registration number on second line with approximately 2 inches between the lines.

b. Crash-fire vehicles which have controls and/or equipment concealed in closed compartments will have the appropriate title marked in a centrally located place on the outside of the compartment doors, as shown in figure 4-16, using legible black letters.

c. All fire fighting trucks equipped with radios will have radio call numbers marked on each side, on the top, and on the rear of the vehicles. These numbers will be 2 feet high on crash vehicles. On rescue and ramp fire fighting vehicles size of markings may be reduced in proportion with the space available for applying the marking. In all instances the largest size marking possible shall be utilized. These numbers will be applied using silver reflectorized tape on vehicles painted red and red reflectorized tape on vehicles painted lime yellow.

3-59. OPERATING INSTRUCTIONS.

a. To aid in the operation and to prevent potential damage to equipment and injury to personnel, vehicles without adequate operational instructions or "plates" in the driver's or operator's compartment may have the name of, or duty performed by the lever, switch, valve, or pedal, etc., marked on or near each, and the use or direction of movement if deemed necessary. These markings will be of the smallest readily readable size. Understandable abbreviations may be used. On equipment where it is determined that marking instructions will not obtain the desired results because of

appearance, inadequate space, or other reasons, an operating instruction plate will be fabricated and fastened securely to the equipment within easy and full vision of the operator or driver.

b. Cranes, high reach maintenance and telephone line maintenance/construction vehicles that are not insulated and not designed for working in close proximity of electrical power lines shall be equipped with a metal sign, approximately 8 by 10 inches. On crane, sign shall be affixed to the upper center of the cab panel directly in front of the operators knees. On other applicable vehicles, sign shall be affixed to the operators ground control panel and basket control panel. This sign shall have a white background with DANGER in 2 inch red letters; DO NOT OPERATE BOOM OR DERRICK WITHIN 10 FEET OF ELECTRIC LINES in 1/2 inch black letters. In addition, a metal plate 3 x 4 inches affixed to the right hand side of the above referenced DANGER sign having a red background with DO NOT OPERATE BOOM ABOVE 80 DEGREES FROM THE HORIZONTAL PLANE in 5/16 inch white letters.

c. All forklifts shall have "NO RIDERS" in 2 inch black letters, stenciled vertically on both uprights of the fork frame, facing the operator.

d. Aircraft towing tractors and tugs used for towing aircraft shall be equipped with a metal sign, approximately 3 by 4 inches, red background with "MAXIMUM SPEED 10 MPH" "AIRCRAFT TOWING SPEED 5 MPH" in 5/16 inch silver letters. This sign shall be attached to a panel directly in front of the operator.

e. All special purpose and engineer equipment having speedometers and/or tachometers shall have the maximum safe operating speed and or revolutions per minute indicated by a red line painted on the glass covering the dial.

f. Mobile cranes and street sweepers shall have an instructional metal placard, of the largest practical size, affixed to read, white background with red letters: "SOUND HORN, WAIT FOR SIGNAL FROM OPERATOR BEFORE PASSING."

g. Rollerized vehicle beds (K Loaders and flatbed trailers) will have the legend "WATCH STEP" applied on the walkway at each end of the rollerized beds. The legend will be stenciled in 3-inch letters at one foot intervals beginning at each end of the rollerized bed and extending inward for 4 feet. The legend will be applied utilizing yellow paint on black and green surfaces and black paint on yellow surfaces.

3-60. CONTINENTAL OR LYCOMING AIR-COOLED ENGINES. All vehicles equipped with Continental or Lycoming air-cooled engines will have the auxiliary engine oil, which is specified in the applicable technical order, either stenciled or taped on a body panel near the engine, or on the access door to the engine, using 1/2 inch letters. When applying this information by stenciling, use white paint on red surfaces and black paint on yellow surfaces. When using tape, apply red tape with silver numbers.

EXAMPLE:

Auxiliary
Engine
Oil
Specifications
Grade

3-61. MARKING SECURITY POLICE VEHICLES. "SECURITY POLICE" markings will not be affixed to a vehicle. These markings will be applied to a metal backing plate 4 by 24 inches and affixed to the front and rear of the mounting bar, FSN 2540-409-8878, as illustrated in figure 4-35. Identification markings will be located as illustrated in figure 4-28. Soft top equipped vehicles (jeeps) will be placarded as near as possible to that illustrated in figure 4-29.

3-62. ALERT, REFLEX, DCO, DCM, BASE OPS, and BASE CIVIL ENGINEER (FIRE MARSHAL). Marking of these and other vehicles requiring specific identification will be accomplished by use of the same type detachable device as illustrated in figure 4-31. The mounting bar NSN 2540-00-409-8878 may be utilized when approved by the Major Command concerned.

3-63. "FOLLOW ME" vehicles: The "FOLLOW ME" sign assembly will be painted white, reflective, FSN 8010-965-2500.

3-64. LOW VISIBILITY MARKING. SNOW REMOVAL EQUIPMENT. All snow removal equipment will be outlined to indicate height, length, and width utilizing silver reflective tape conforming to LS300A, Type II, Class 3, Reflectivity 1, Color G.

3-65. MARKING EXPLOSIVE ORDNANCE DISPOSAL VEHICLES. These vehicles may be equipped with rotating warning lights, as well as sirens. When warning lights and sirens are used, they will be installed on a removable mounting bar NSN 2540-00-409-8878. The abbreviated legend E.O.D. will be applied to a metal backing plate in four-inch silver reflective letters on a red background and affixed to the front and rear of the mounting bar. The type of lights and color of lenses will be in accordance with local or state laws regarding operation of emergency vehicles or in cases of overseas operation, in compliance with status of forces or host nation agreements.

3-66. MARKING VEHICLES EQUIPPED WITH MS51335 SERIES PINTLE HOOKS. All vehicles (except toned down) equipped with a manual release pintle hook, MS51335 series, will be marked as illustrated in figure 4-36 utilizing 1/2 inch silver reflective letters on a red background. Toned down vehicles will be marked utilizing a non-reflective decal with 1/2 inch black letters, color No. 37038, on green background, color No. 24052.

3-67. SLOW MOVING VEHICLE EMBLEM. The slow moving vehicle emblem illustrated in Figure 4-37 will be applied on the rear of all slow moving vehicles in a readily visible location.

NOTE

Due to the various makes, models, and vehicle designs involved, no specific mounting instructions will be specified. It will be the responsibility of local operating officials to determine which vehicles will require the slow moving vehicle emblem based on local operational requirements.

3-68. STRIKE HAZARD MARKINGS. Strike hazard markings shall be applied, on crane and derrick cabs or portions that extend outward over the chassis when being slewed, in 4- to 6- inch alternating bands of black and yellow as illustrated in figure 4-39.

3-69. CENTER OF BALANCE MARKINGS. The center of balance (CB) and basic weight marking may be applied to those vehicles that are susceptible to air deployment as follows:

a. The center of balance (CB) marking will be applied on each side of the vehicle in a one-inch wide stripe not less than three inches long. The stripe will be located at the lowest visible point on the vehicle. The letters "CB" will be applied directly above the stripe. The basic weight of the vehicle will be applied adjacent to the stripe to indicate basic weight of the vehicle. EXAMPLE:

CB

2430 LBS.

b. The above marking may be applied utilizing reflective paint of a contrasting color or the reflective tape listed in Section V of this technical order.

3-70. DELETED.

3-71. NOISE HAZARD MARKING: Noise hazard marking shall be displayed in the vehicle cab in a readily visible location or adjacent to the access door on all vehicles determined to exceed noise level requirements. The size of marking shall be approximately 3-3/4" X 2-1/2" and shall be applied by stenciling in a contrasting color as follows:

CAUTION

HAZARDOUS NOISE AREA EAR PROTECTION REQUIRED

3-72. MARKING CAMOUFLAGE PATTERN PAINTED VEHICLES. Camouflage pattern painted vehicles shall be marked as follows:

a. Unit identification shall be applied in black lusterless paint NSN8010-00-111-8005.

b. When National Symbol (STAR) is used it shall be applied in accordance with Paragraph 3-27. Utilizing lusterless black paint camouflage, NSN 8010-00-111-8005.

c. US AIR FORCE and registration number shall be applied under the hood in black lusterless letters and numbers.

d. Safety and Instructional markings such as tire pressure, fuel type and fill level may be retained in black lusterless letters no larger than 1 inch. Markings directly related to personnel safety must be evaluated by responsible safety personnel.

3-73. MARKING COMPACT LAW ENFORCEMENT SEDANS. Compact law enforcement sedans shall be marked as follows:

a. POLICE in 7 inch reflective strata blue letters, color number 15045, shall be centered on the rearward facing vertical portion of the trunk lid as illustrated in Figure 4-46.

b. POLICE in 4 inch reflective strata blue letters color number 15045 shall be applied to the top vertical side of both front fenders as illustrated in Figure 4-46.

c. A security police badge decal shall be centered on both front doors as illustrated in Figure 4-46.

d. Registration number shall be applied directly above the police badge in one inch reflective strata blue letters and numbers. FOR OFFICIAL USE ONLY shall be applied directly below the police badge in 1 inch reflective strata blue letters.

e. Dual 4 inch wide stripes 2 inches apart shall be applied on each side of the vehicle utilizing reflectorized strata blue tape, 3M P/N 580-75, as illustrated in Figure 4-46.

f. When approved by the local Commander, markings such as Crime Stop decals can be applied to the front or rear bumpers and light bars.

3-73A. MARKING 41-PASSENGER INTER-CITY BUSES USED FOR SUPPORT OF BANDS.

a. The bands number followed by "AIR FORCE BAND" may be centered on the blue background below the windows on each side of the bus when approved by the major command; EXAMPLE: "701 AIR FORCE BAND".

b. The marking shall be applied in 12 inch high letters and numbers utilizing white paint to match the color of the bus top.

c. All other markings shall be standardized in accordance with Section III of this Technical Order.

NOTE

When authorized by the MAJCOM (CONUS only), buses may display the slogan: "Air Force: A Great Way of Life". The slogan will be on a pressure-sensitive decal applied to both sides of the bus directly below the windows, between the fender well and front door (driver's window on left side) as illustrated in figure 4-47.

d. Buses previously marked with band names shall not be remarked until routine repainting is required.

3-73B. MARKING OF CONTRACTOR OPERATED VEHICLES.

a. Vehicle owned and furnished by the Government to a contractor shall be marked "CONTRACTOR OPERATED". The marking will be applied on both front doors immediately below official Air Force markings in 1-1/2 inch letters. Color of marking shall be as specified in paragraphs 3-8 through 3-10.

b. Vehicles separately owned or leased by the contractor for contractor support will be identified on both front doors as "CONTRACTOR OPERATED" with the contractor's official name.

3-74. INSTALLATION OF REFLECTORIZED TAPE.

a. Clean surface of vehicle prior to applying marking.

b. Remove liner film down.

c. Position emblem on clean surface. Tack in position with thumb pressure.

d. Start in center using hard overlapping strokes of a low friction plastic squeezee.

e. Re-squeezee the edges using very firm strokes.

f. Apply clear sealer to the edges of the tape.

g. Repairs to damaged areas can be made without stripping original tape. Clean damaged area and apply new tape over affected area.

3-75. REMOVAL OF REFLECTORIZED TAPE.

a. Pressure sensitive tape may be removed by softening with heat (heat lamp, heat gun, steam, etc.). Adhesive residue can be softened with rags soaked with lacquer thinner, Kylol or isoprol alcohol and scraped away with plastic scraper or putty knife.

b. Where tape has been applied for several years it may be most easily removed by masking off the area around the tape and then brushing a methylene chloride base paint remover over the tape. Several applications of remover may be required at shortly spaced intervals; tape residue should be removed with plastic scraper or bevel edge putty knife between applications. The paint remover may damage the paint beneath the tape, requiring cleaning and touchup painting in that area.

NOTE

The above solvents are flammable and toxic, and methylene chloride base paint removers can be toxic; therefore, all safety precautions shall be taken.

3-76. REQUISITIONING OF MARKINGS. All markings listed in section V, paragraph 5-1.b., source coded WR/ALC, will be requisitioned in accordance with AFR 6-4. Requisitions will be submitted on AF Form 764A to 2853 ABG/DAPE, DPO 4032A, Robins AFB GA 31098.

NOTE

If decals are not available upon immediate requisition and equipment involved hampers mission capability or presents a safety hazard in an unmarked condition, appropriate markings may be stenciled on vehicles or equipment prior to receipt of decals.

SECTION IV
ILLUSTRATED GUIDE TO VEHICLE MARKINGS

4-1. FIGURES.

The following figures are representative of the various types of bumpers, cabs, and bodies upon which the vehicle markings specified in this technical order are to be placed. The markings illustrated are furnished as a guide to indicate the location of the markings in respect to the space available. Markings of vehicles not illustrated herein will be applied in a manner as nearly as possible to that illustrated for comparable vehicles.

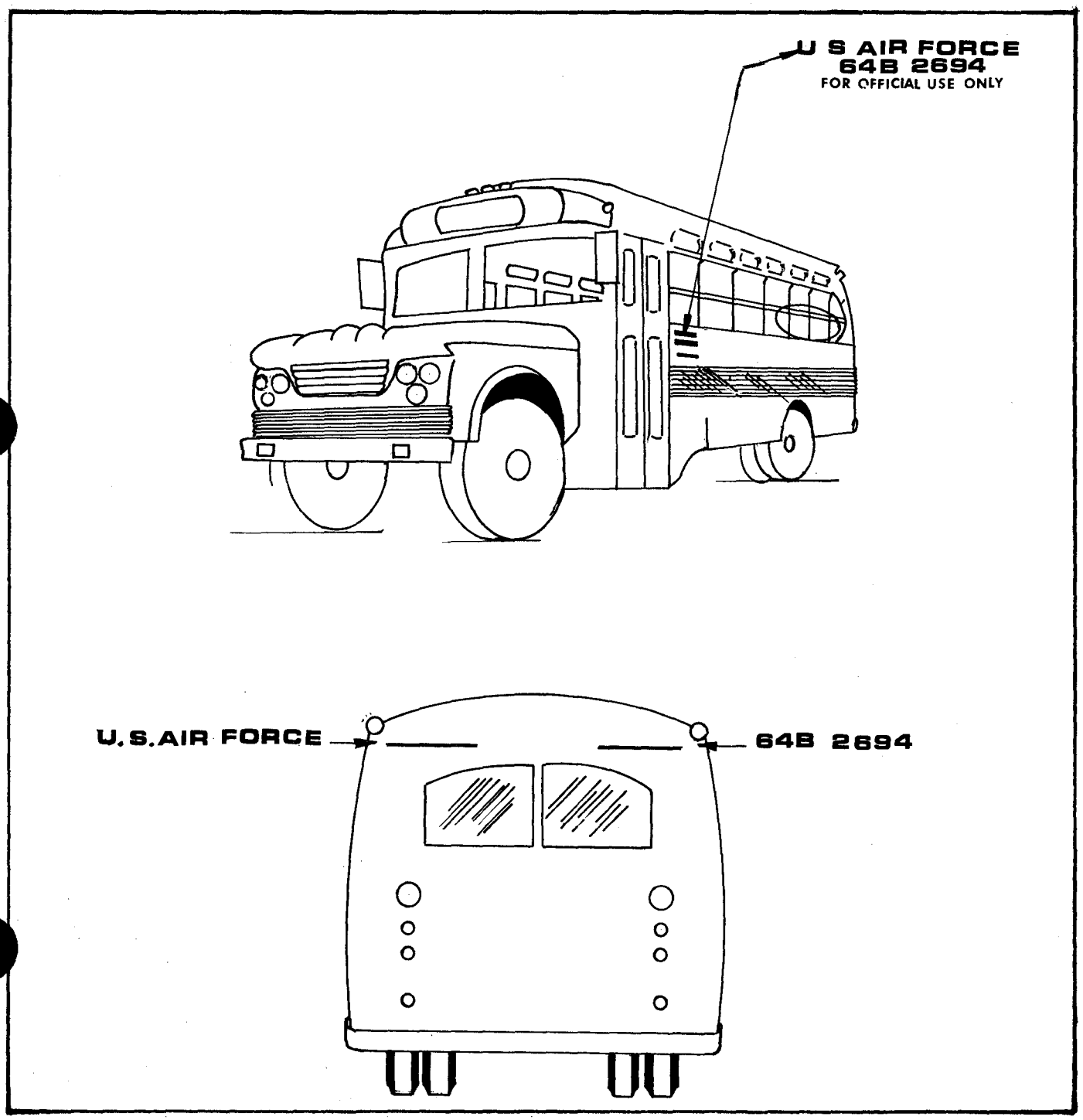

Figure 4-1. Bus

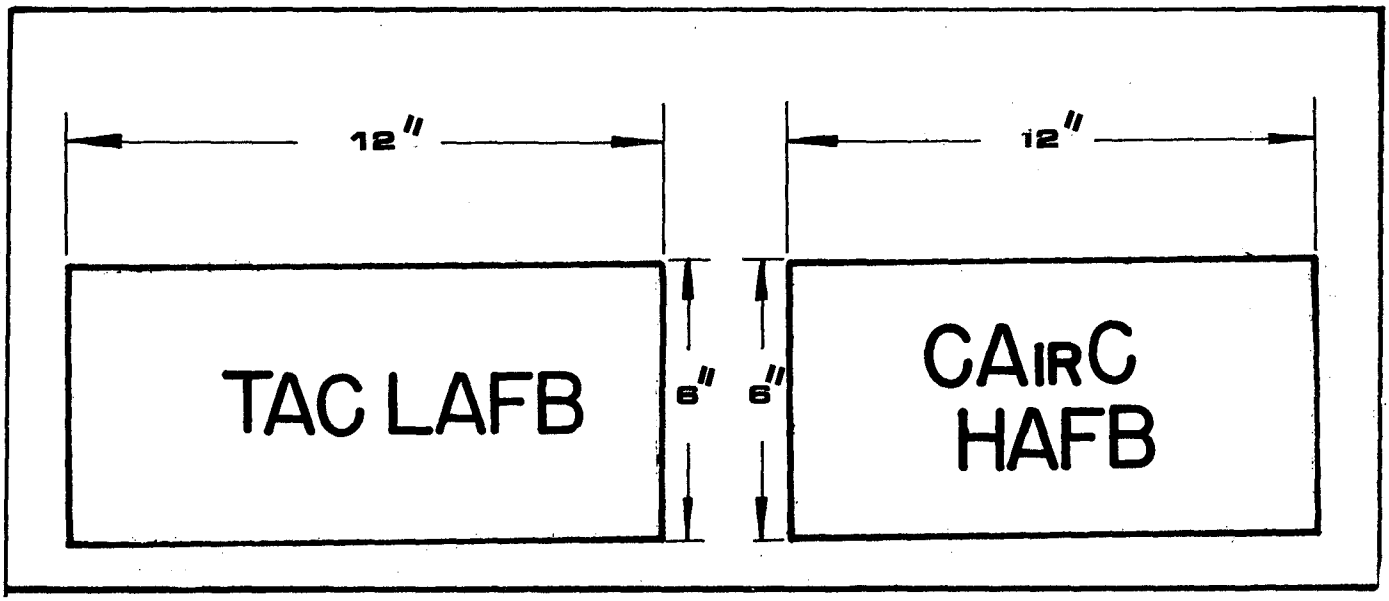

Figure 4-2. Marking Plates

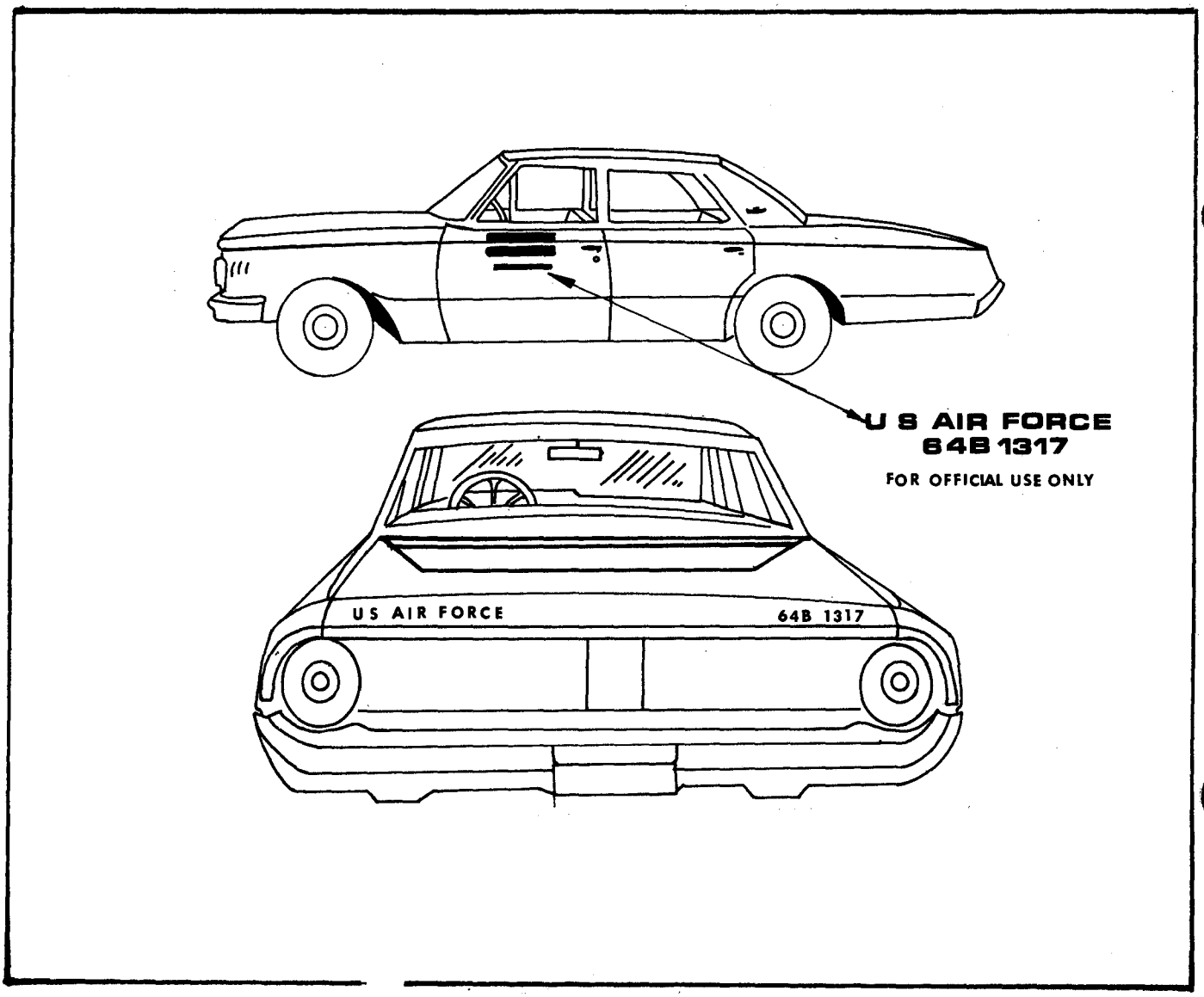

Figure 4-3. Sedan

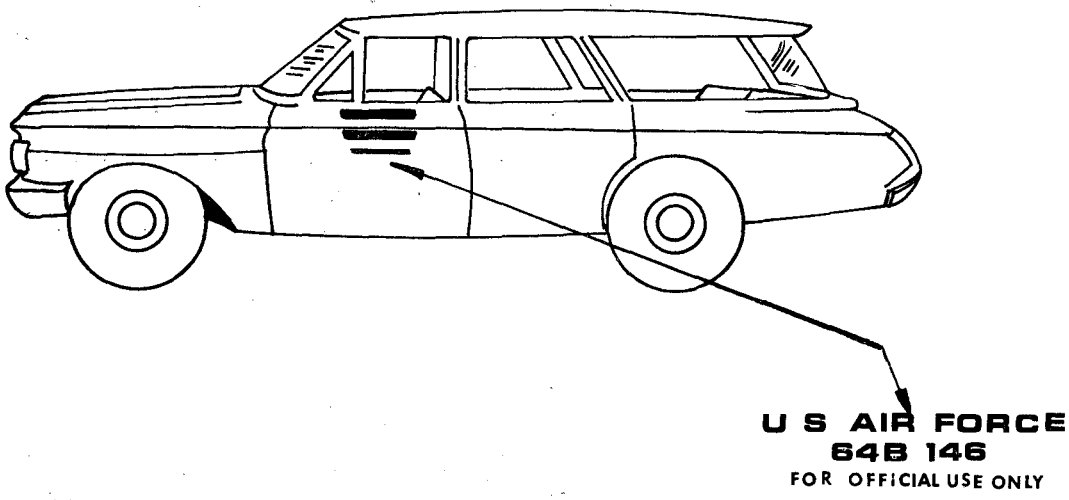

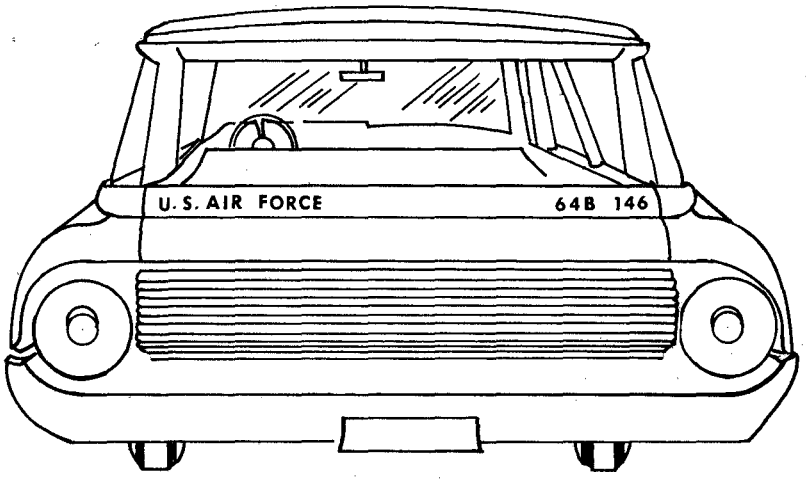

Figure 4-4. Station Wagon

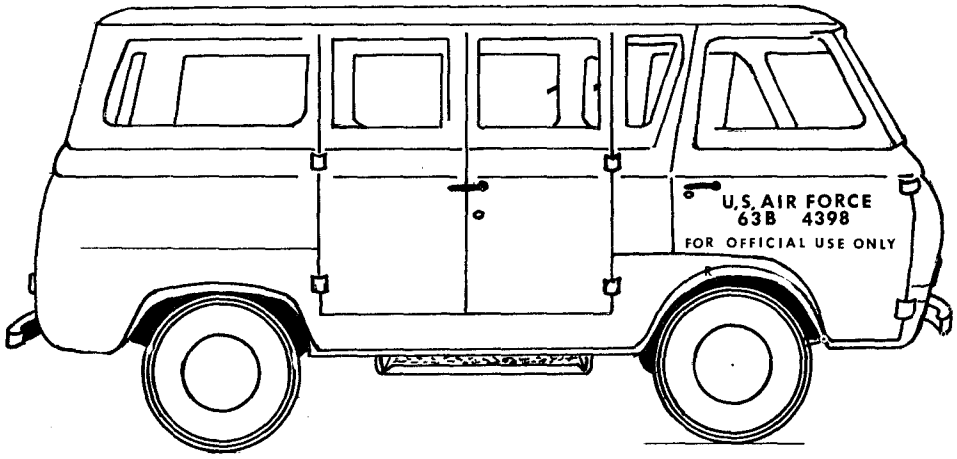

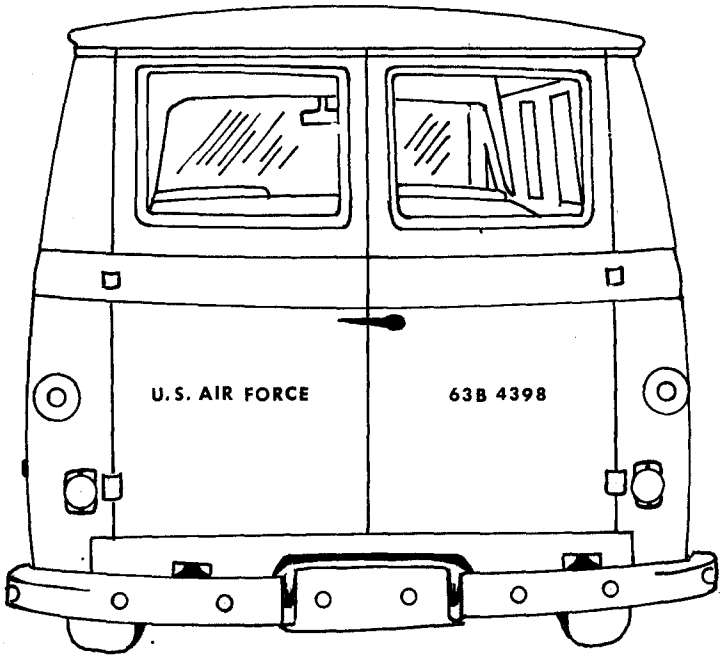

Figure 4-5. Carryall

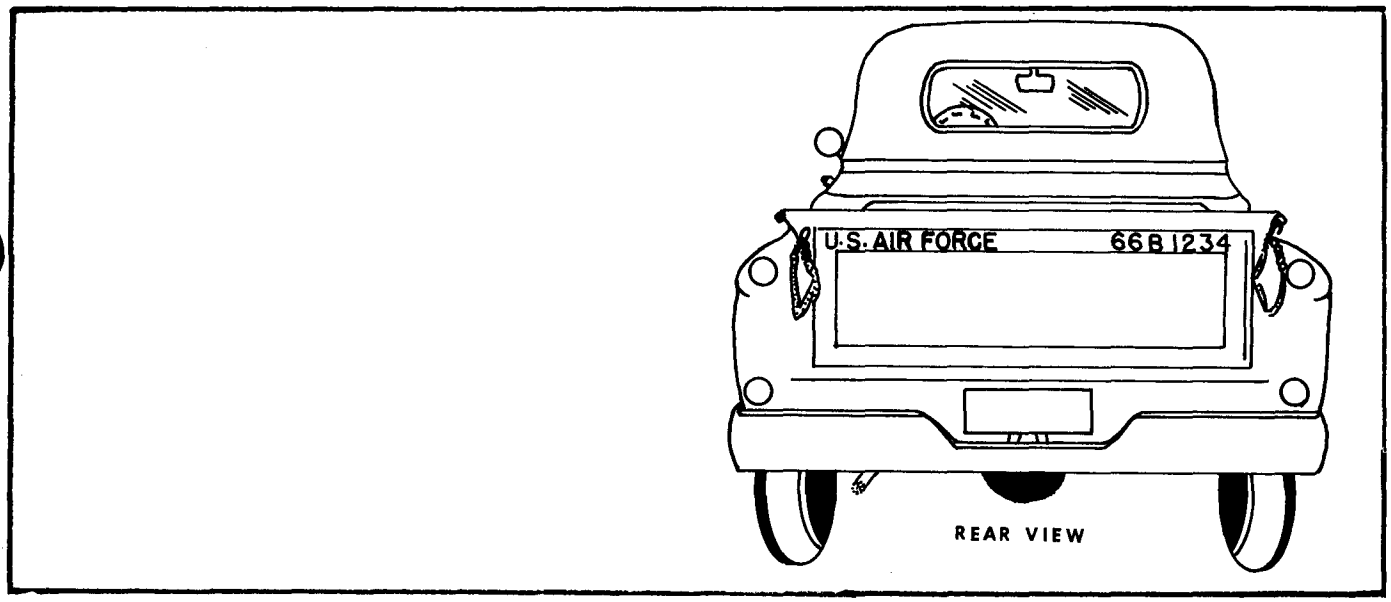

Figure 4-6. P/U Truck

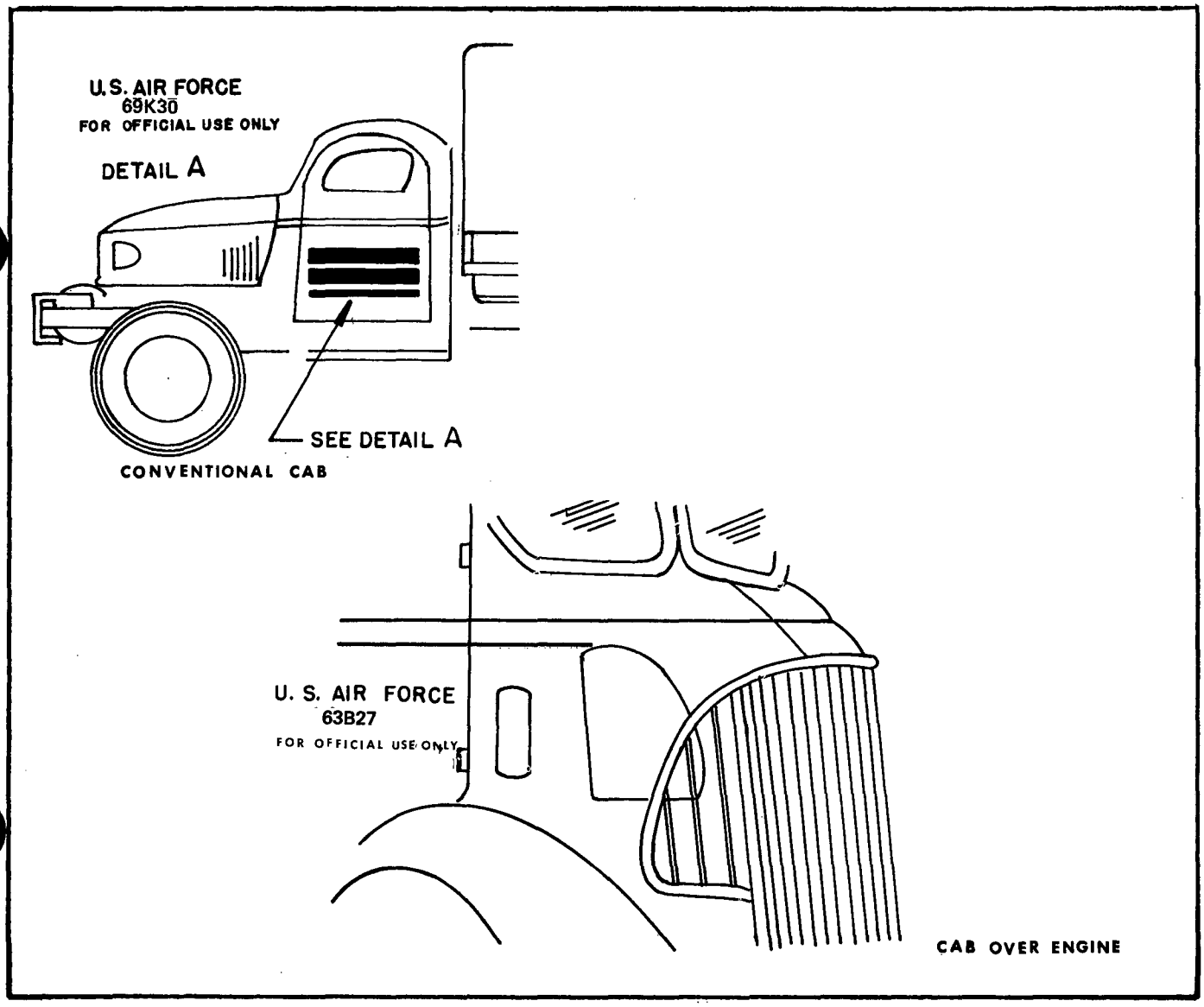

Figure 4-7. Truck Cabs

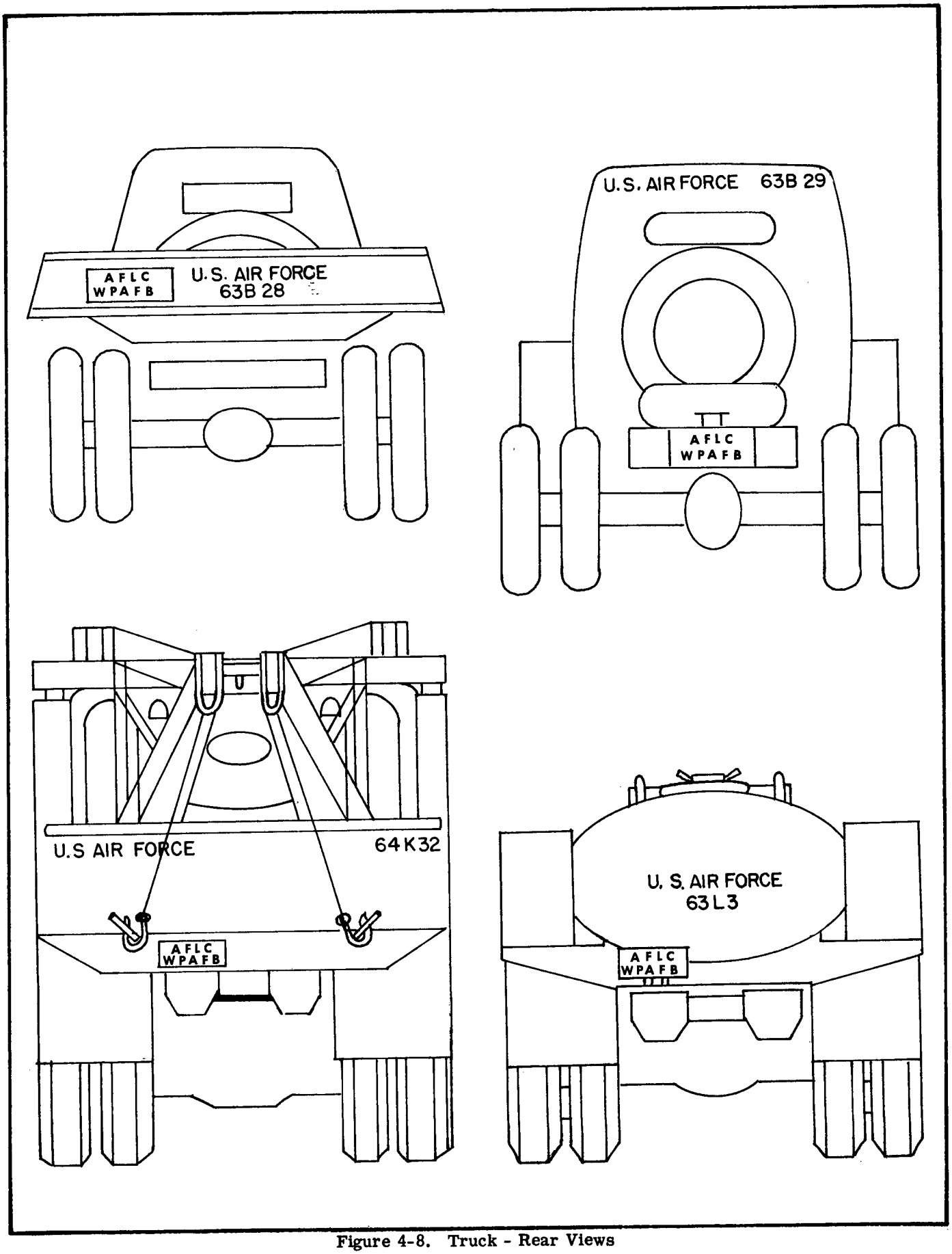

Figure 4-8. Truck - Rear Views

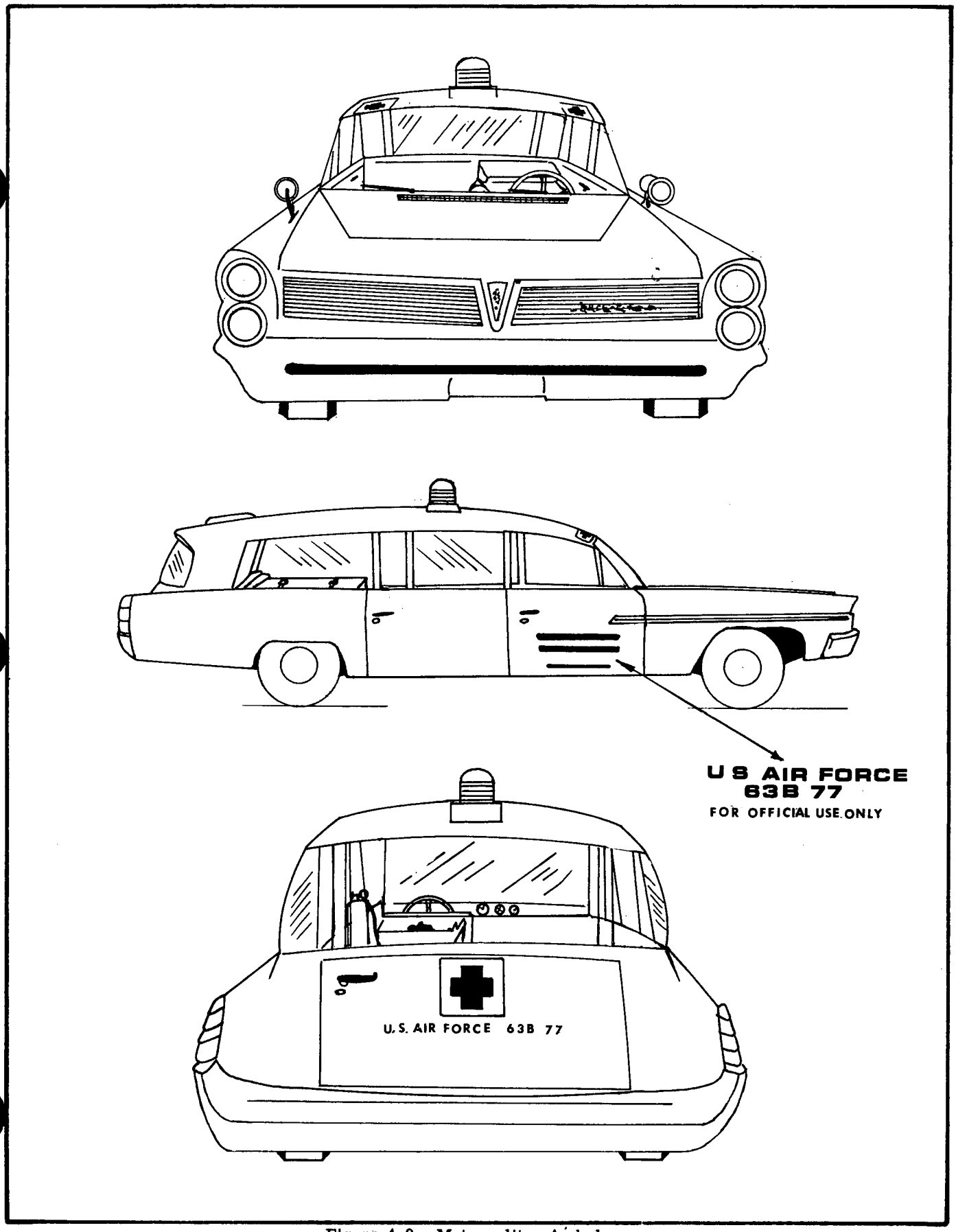

Figure 4-9. Metropolitan Ambulance

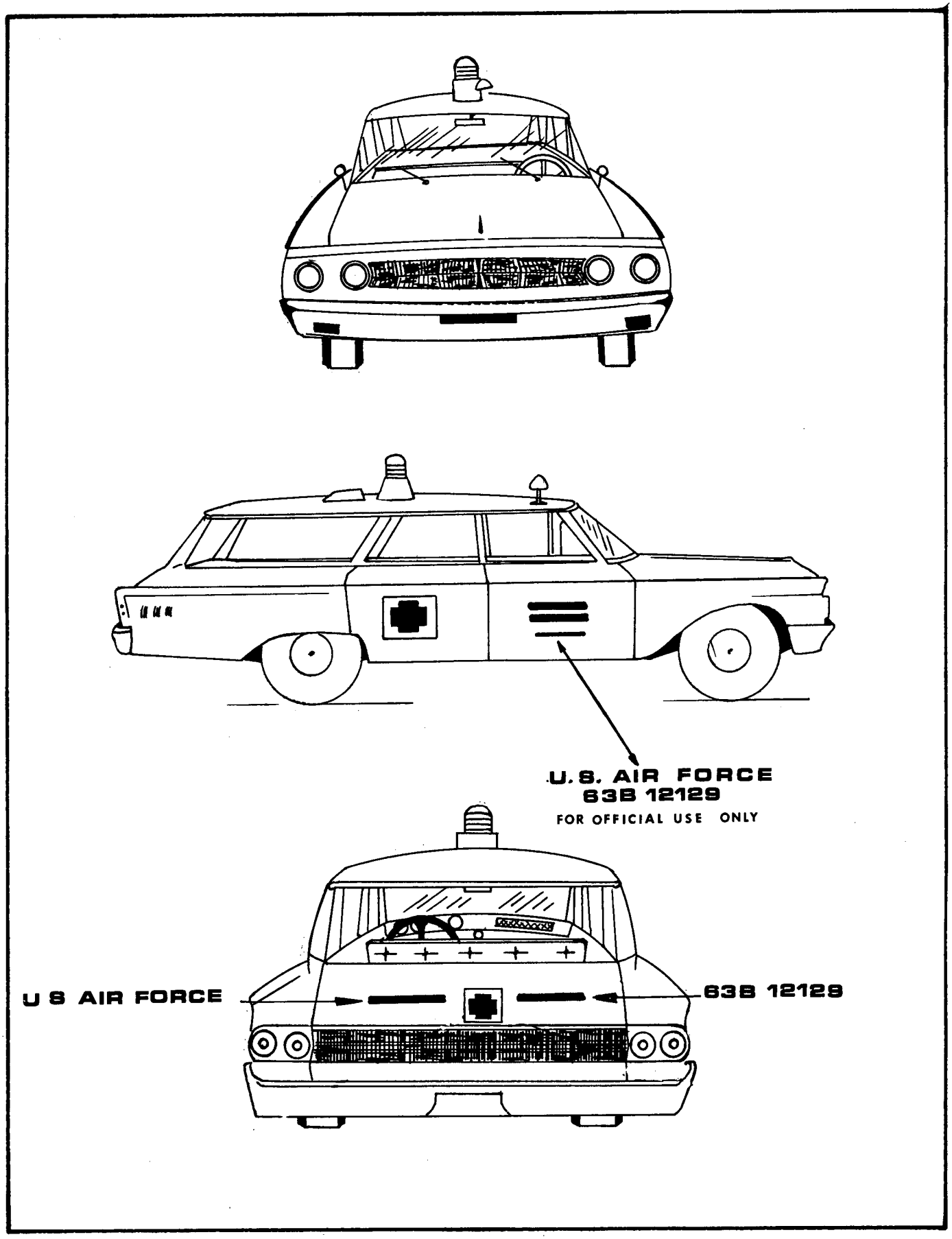

Figure 4-10. Station Wagon Ambulance

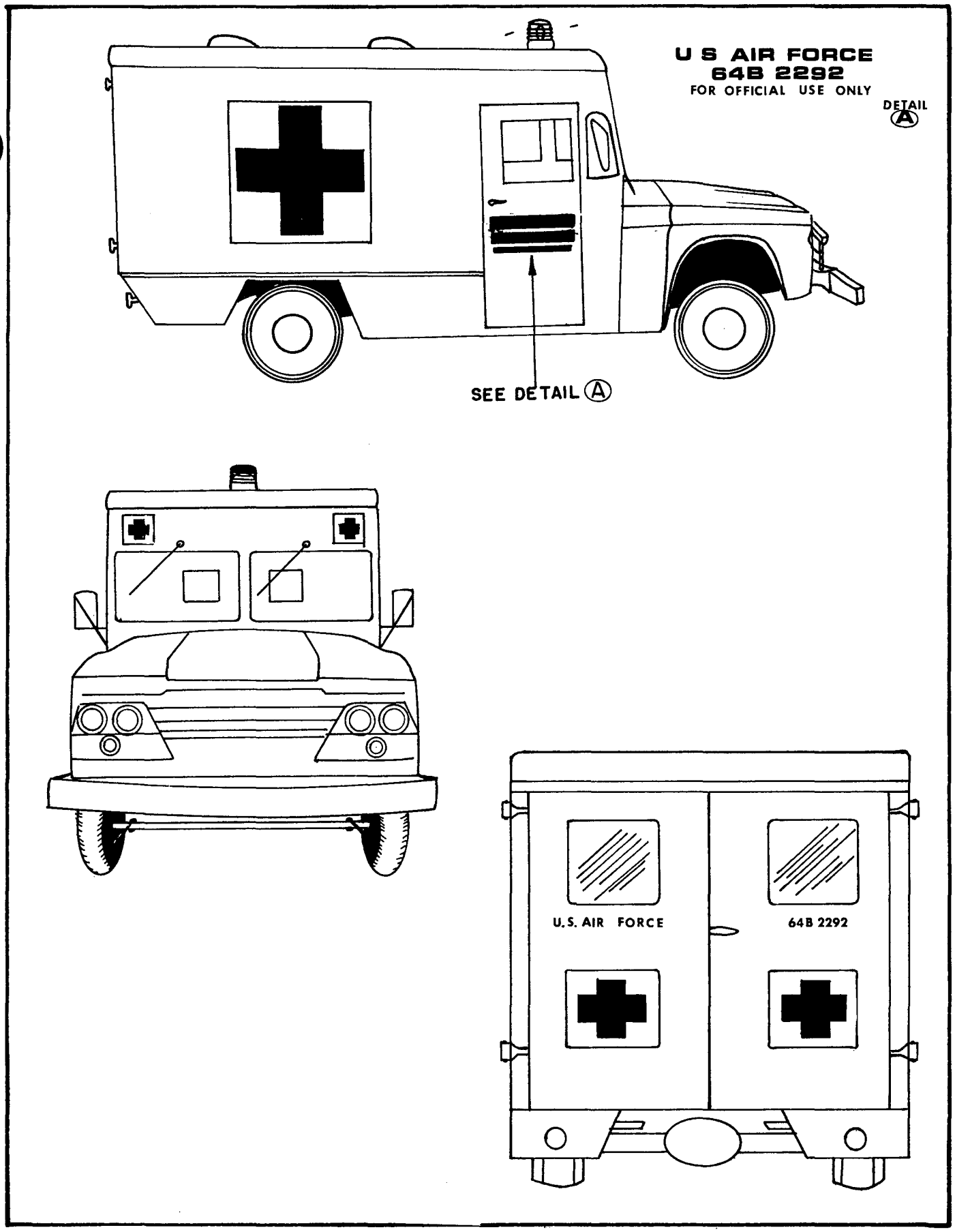

Figure 4-11. Truck Ambulance

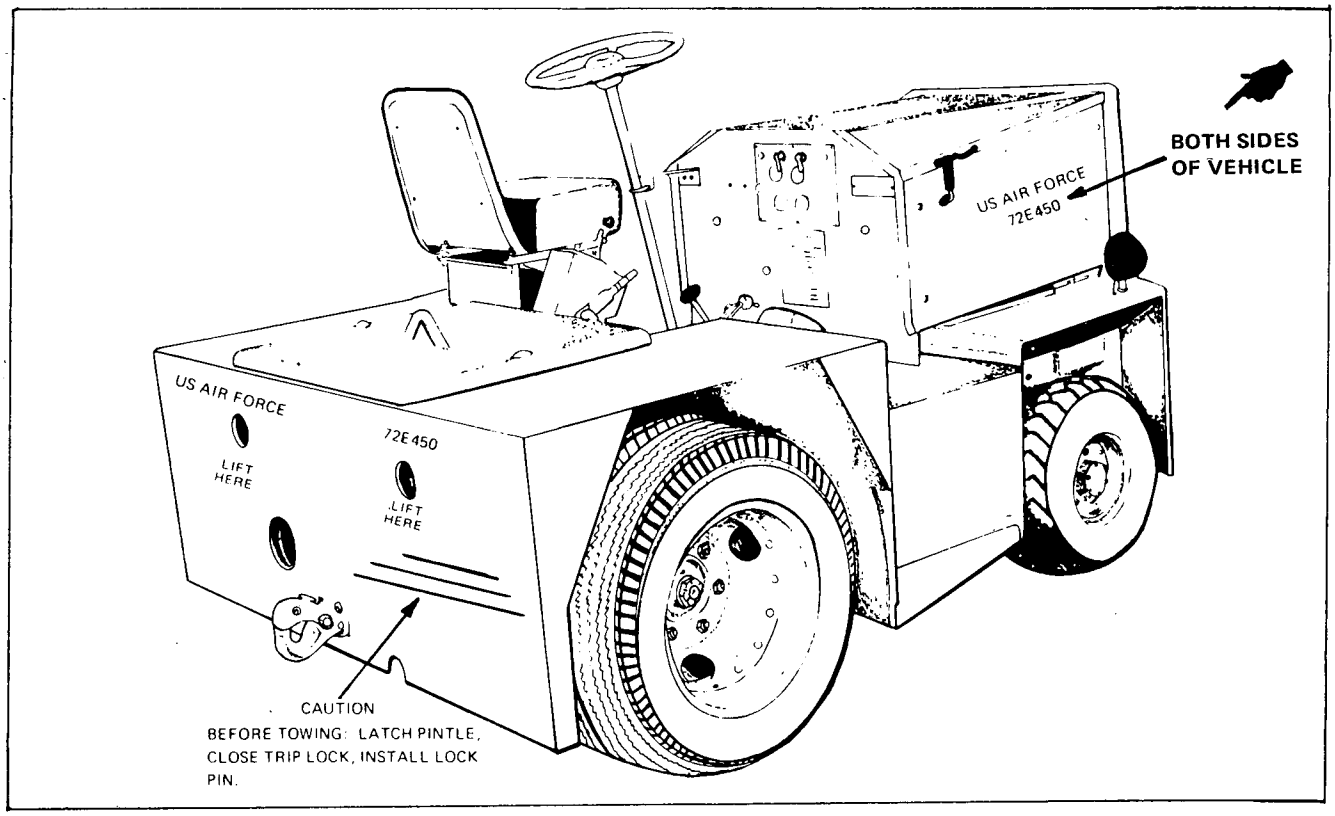

Figure 4-12. Warehouse Tractor

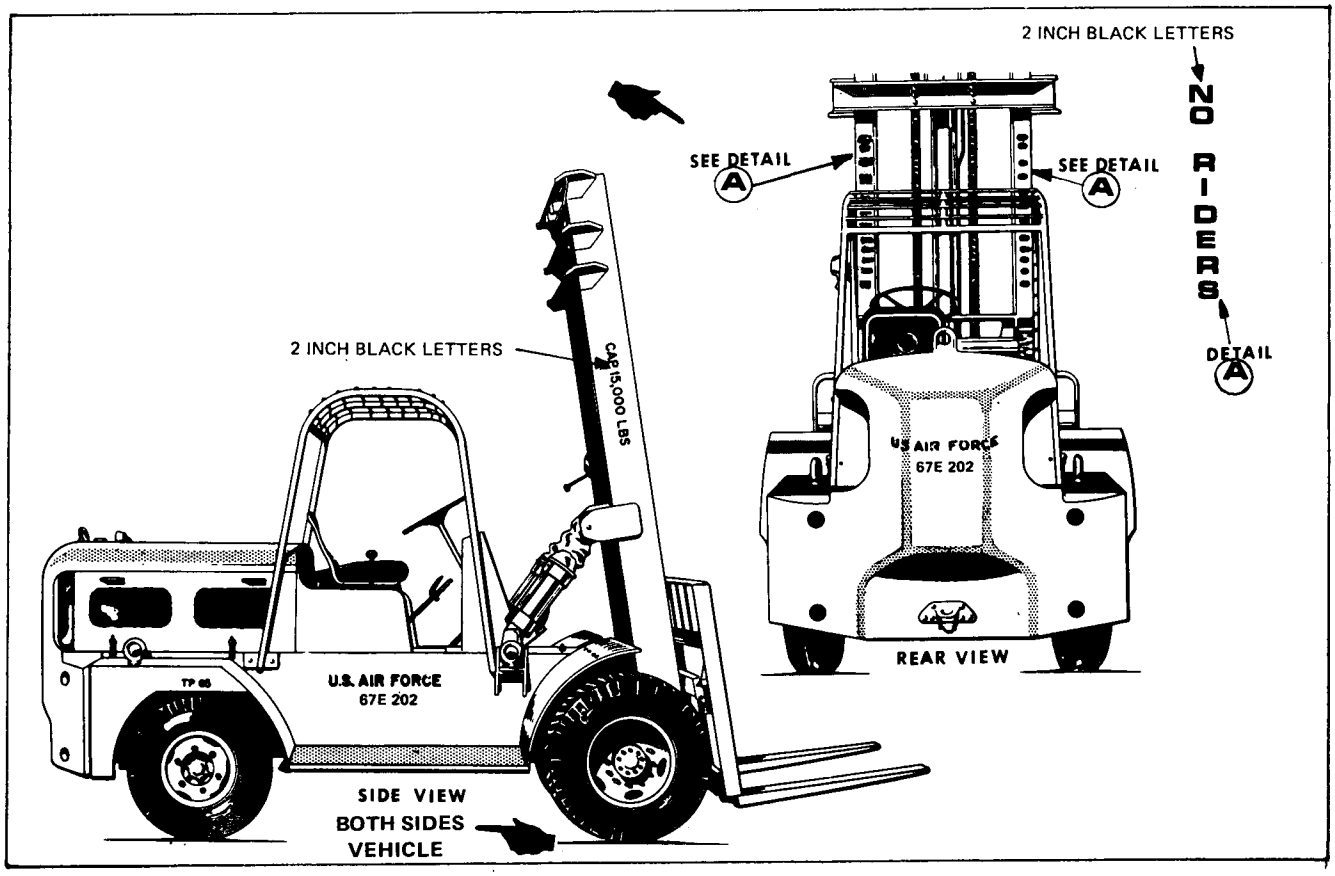

Figure 4-13. Forklift Truck

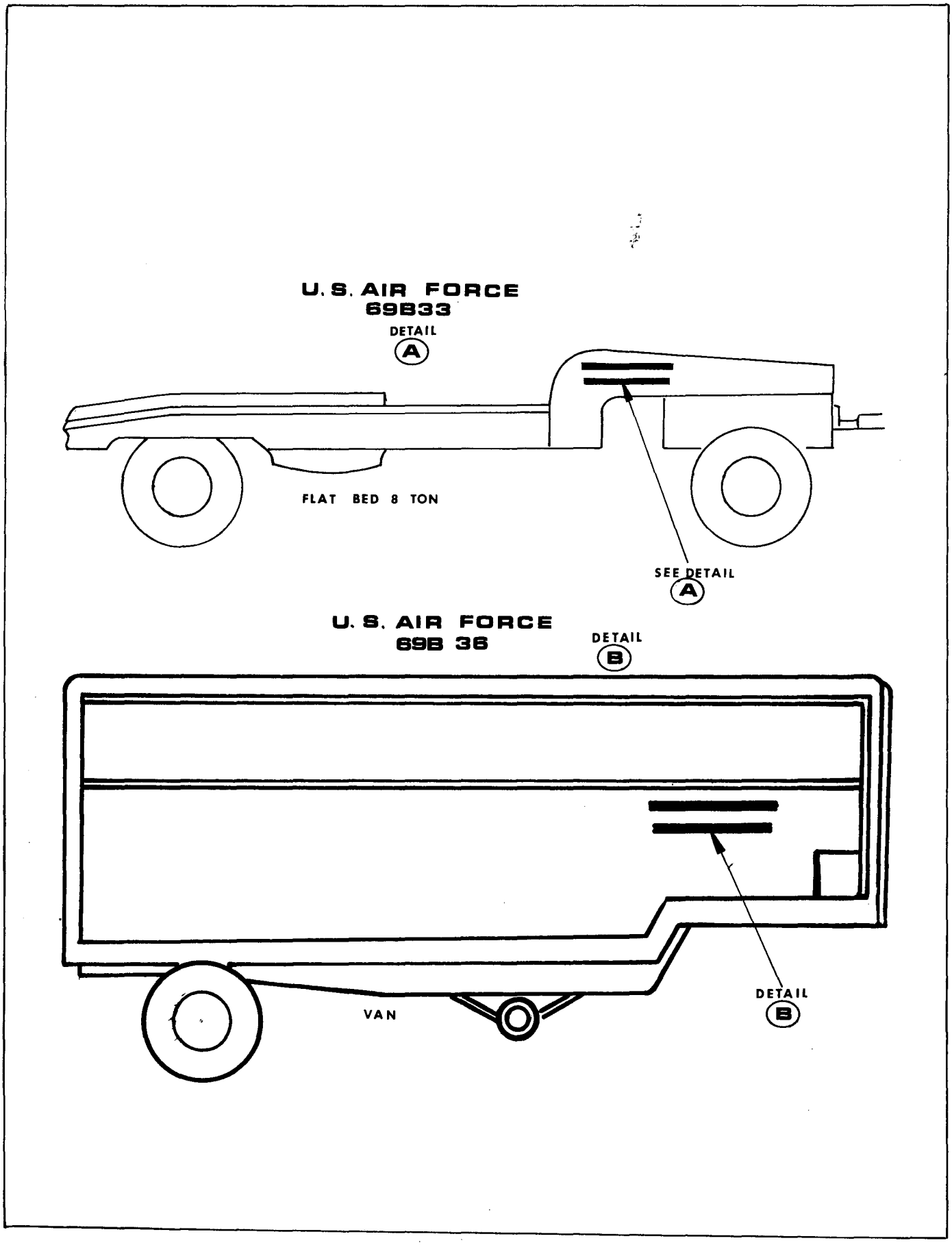

Figure 4-14. Trailers - Side Views

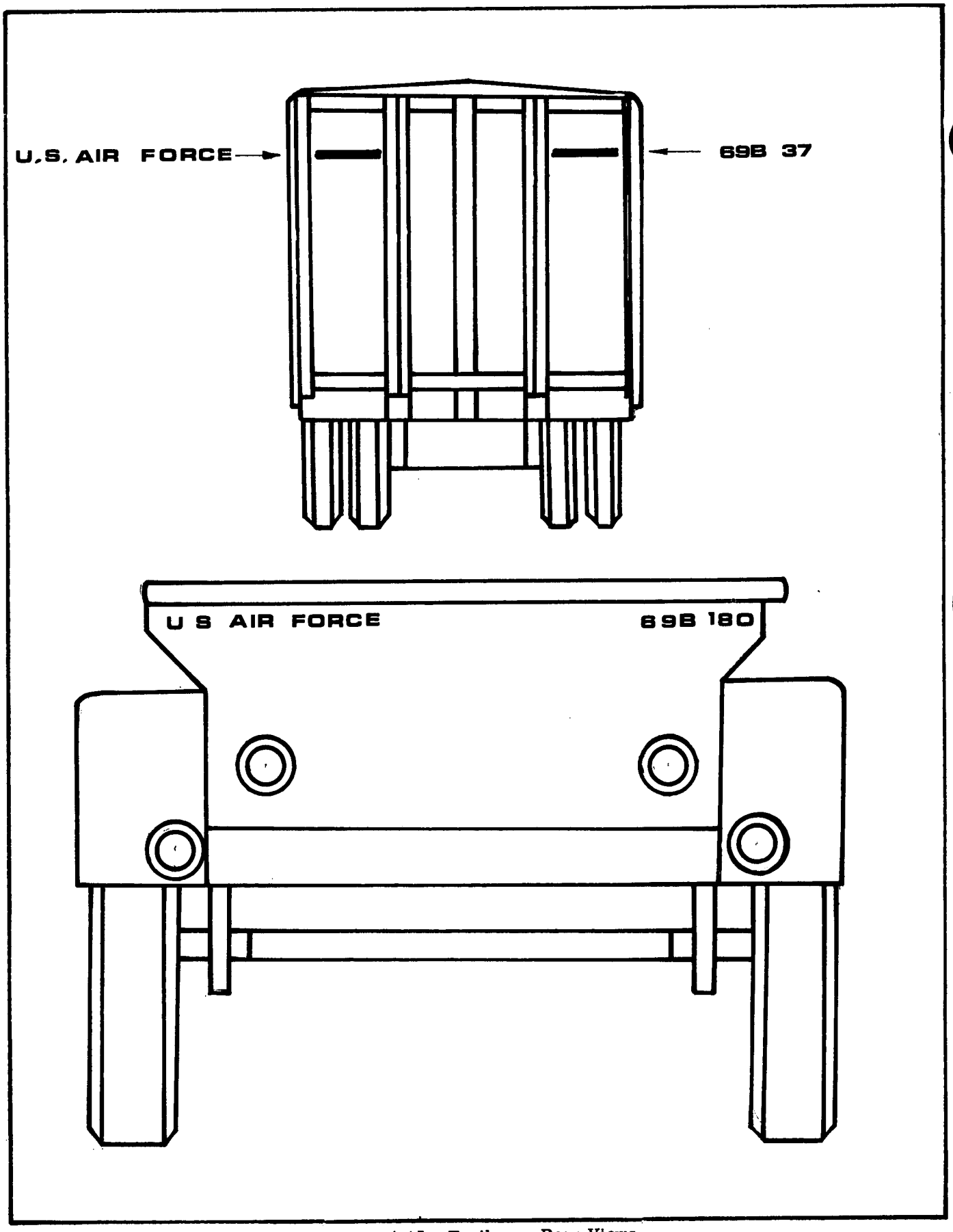

Figure 4-15. Trailers - Rear Views

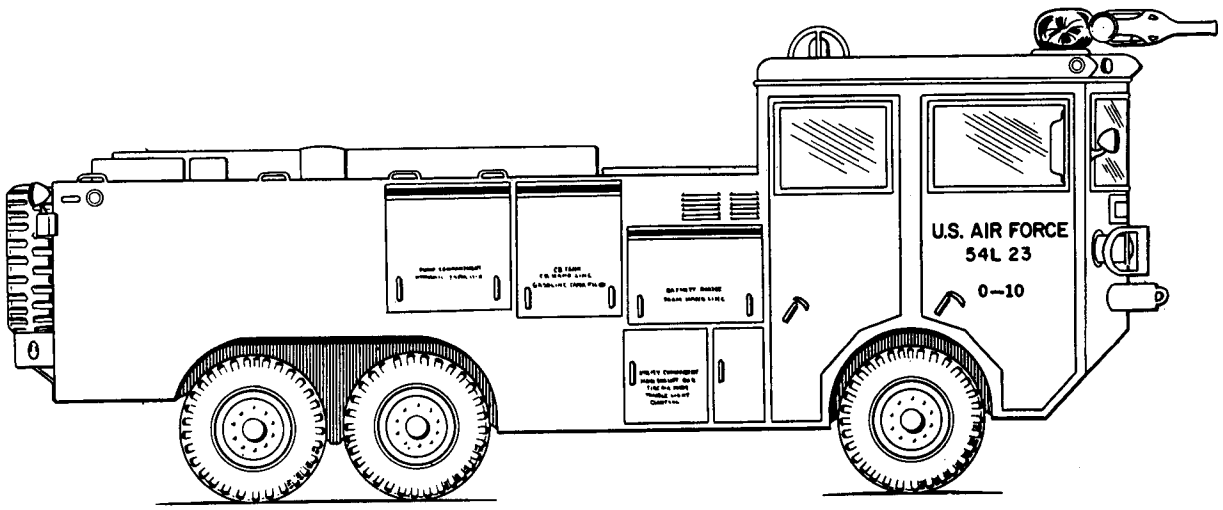

(Side View)

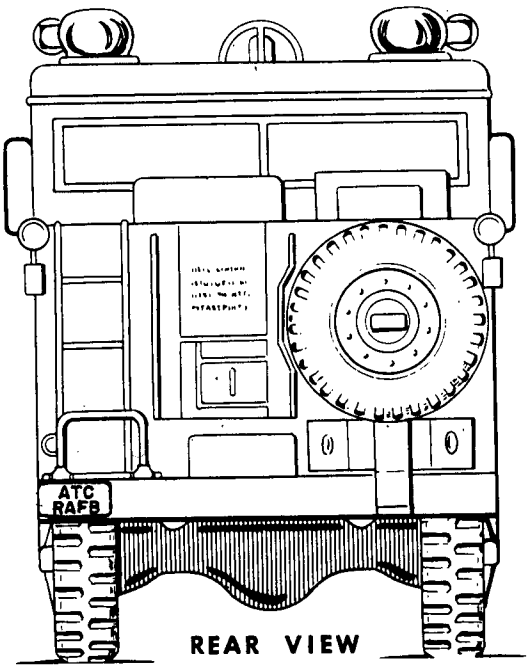

Figure 4-16. Crash Fire Vehicles

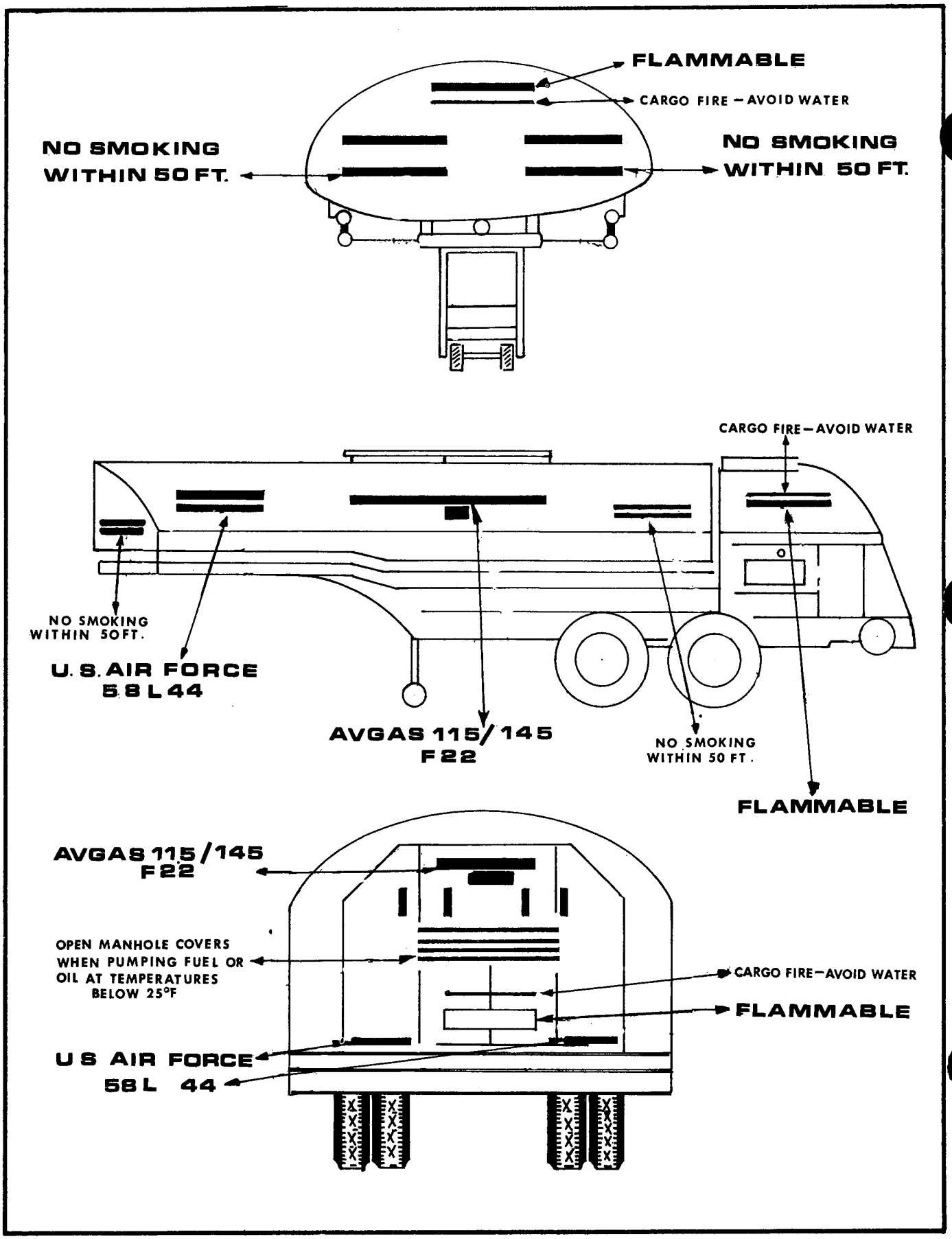

Figure 4-17. Fuel Servicing Semi-Trailer

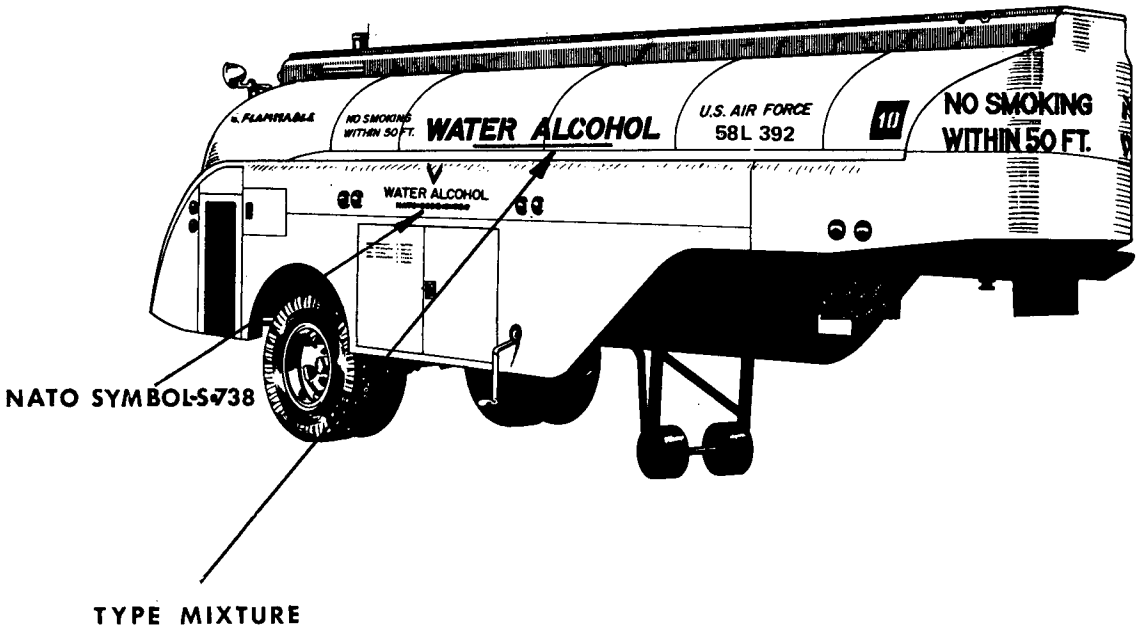

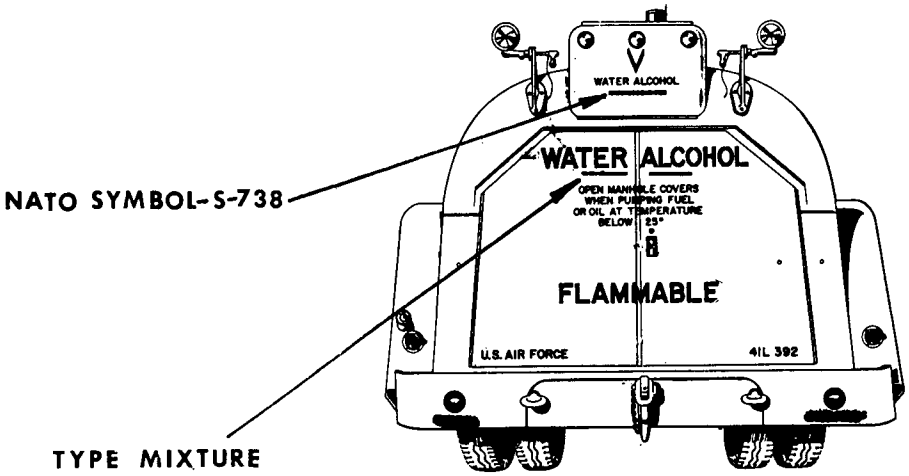

Figure 4-18. Water Alcohol Unit

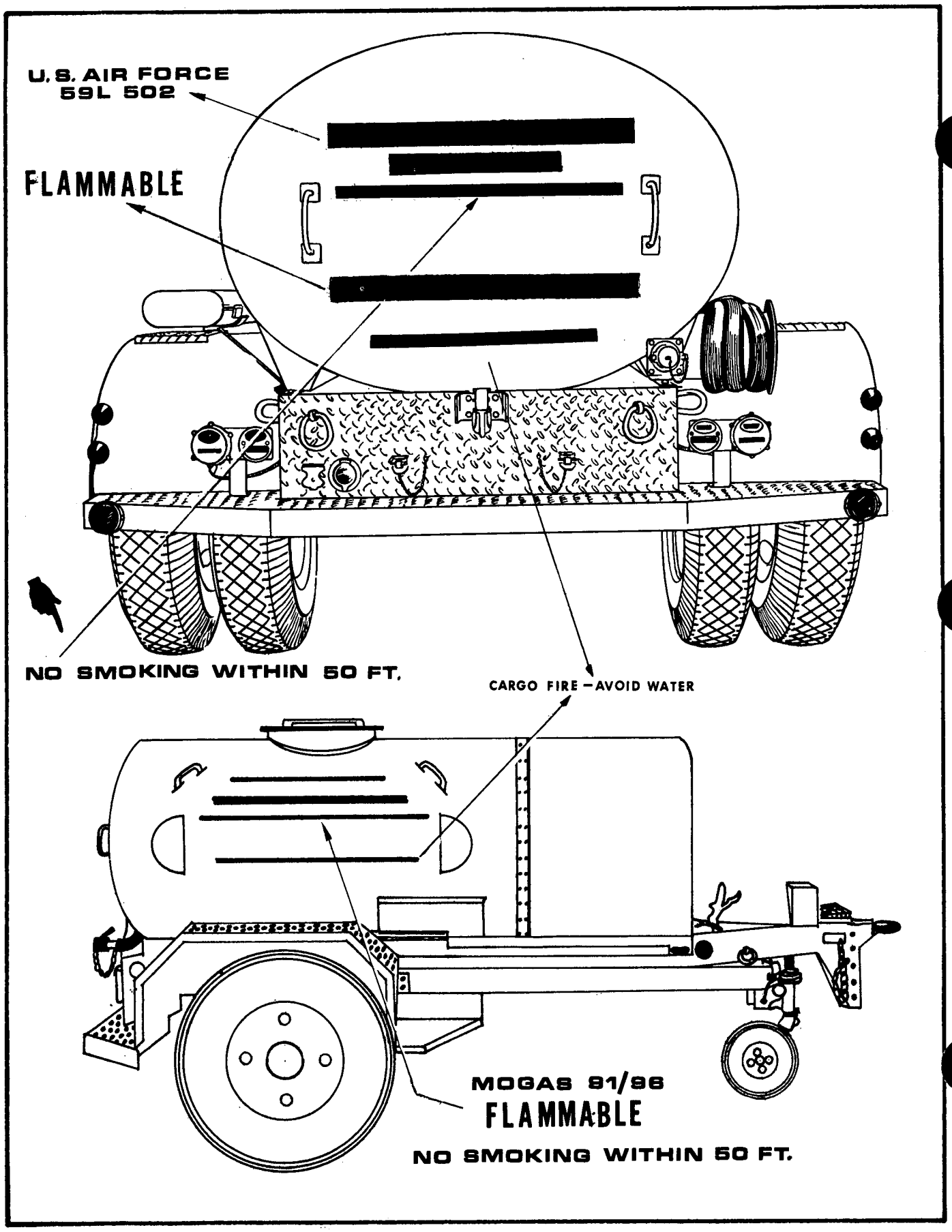

Figure 4-19. Fuel Trailer - Two Wheel

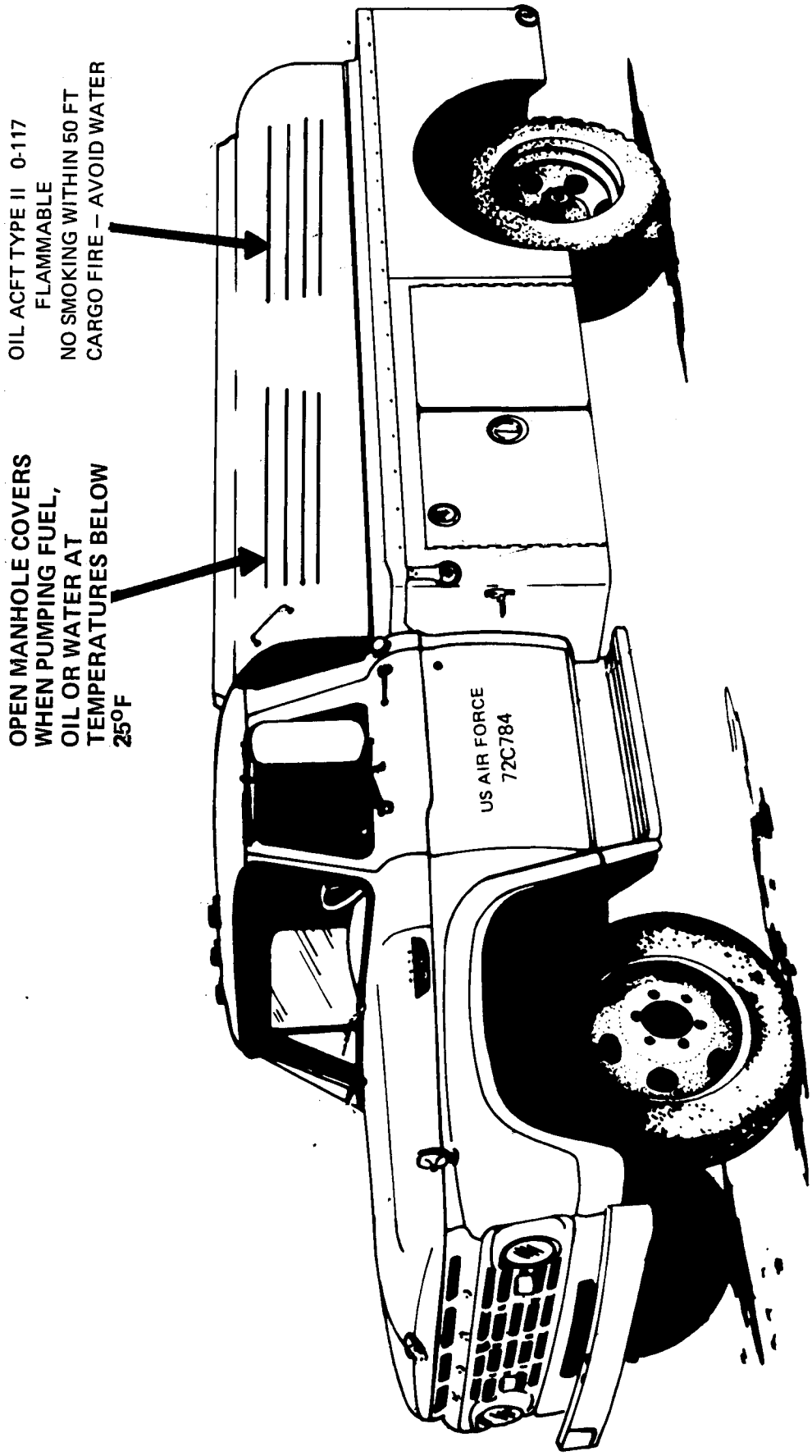

Figure 4-20. Fuel or Oil Servicing Trucks

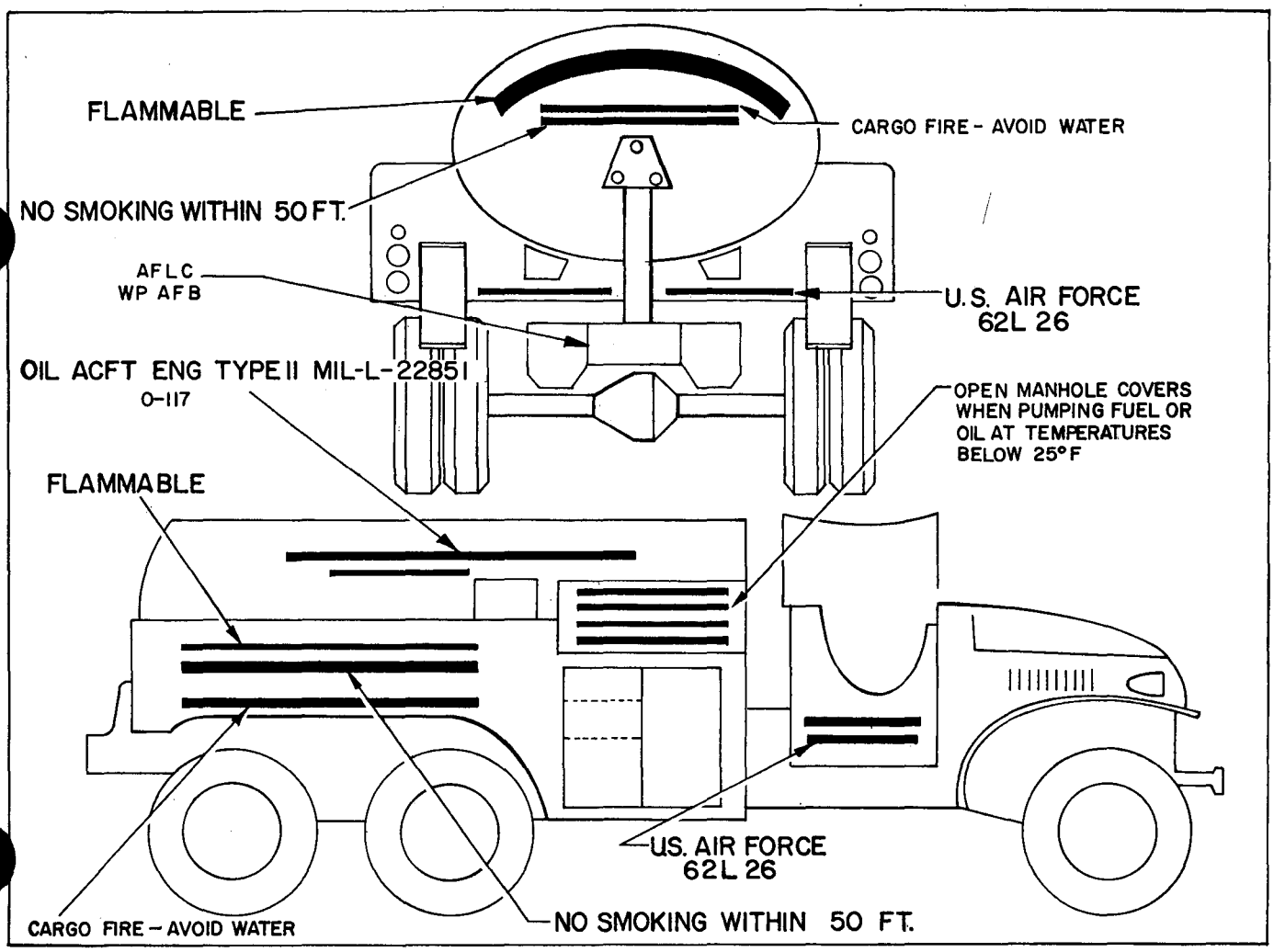

Figure 4-20. Fuel or Oil Servicing Trucks

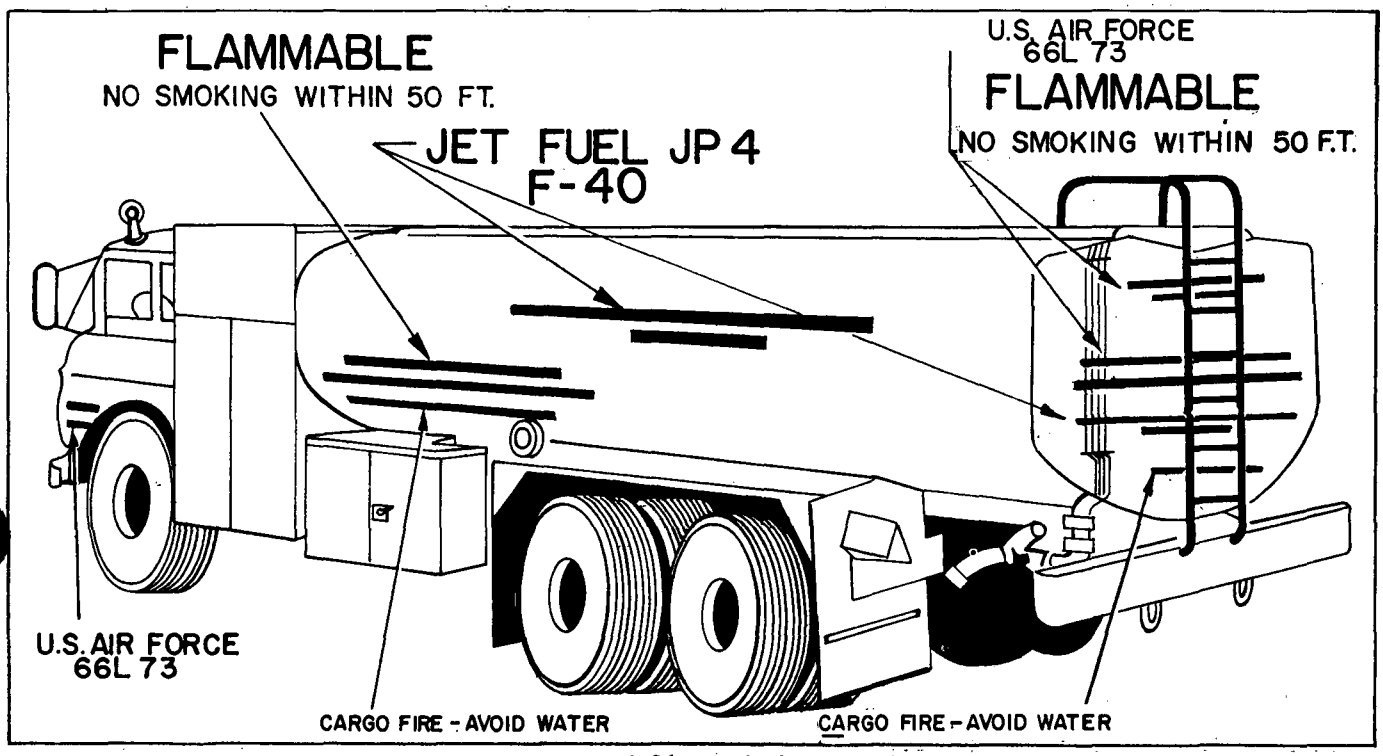

Figure 4-21. Refueling Truck

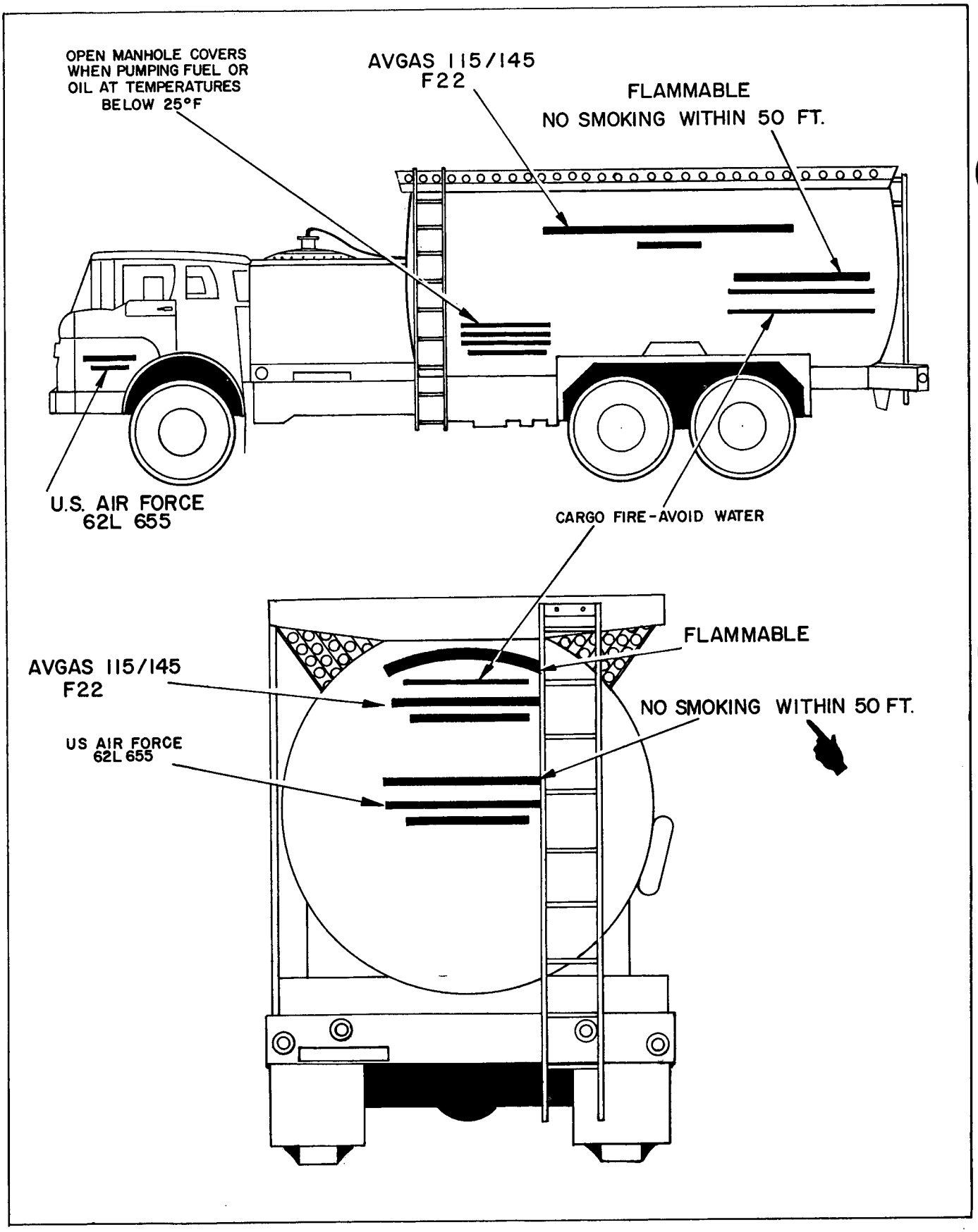

Figure 4-22. Refueling Truck

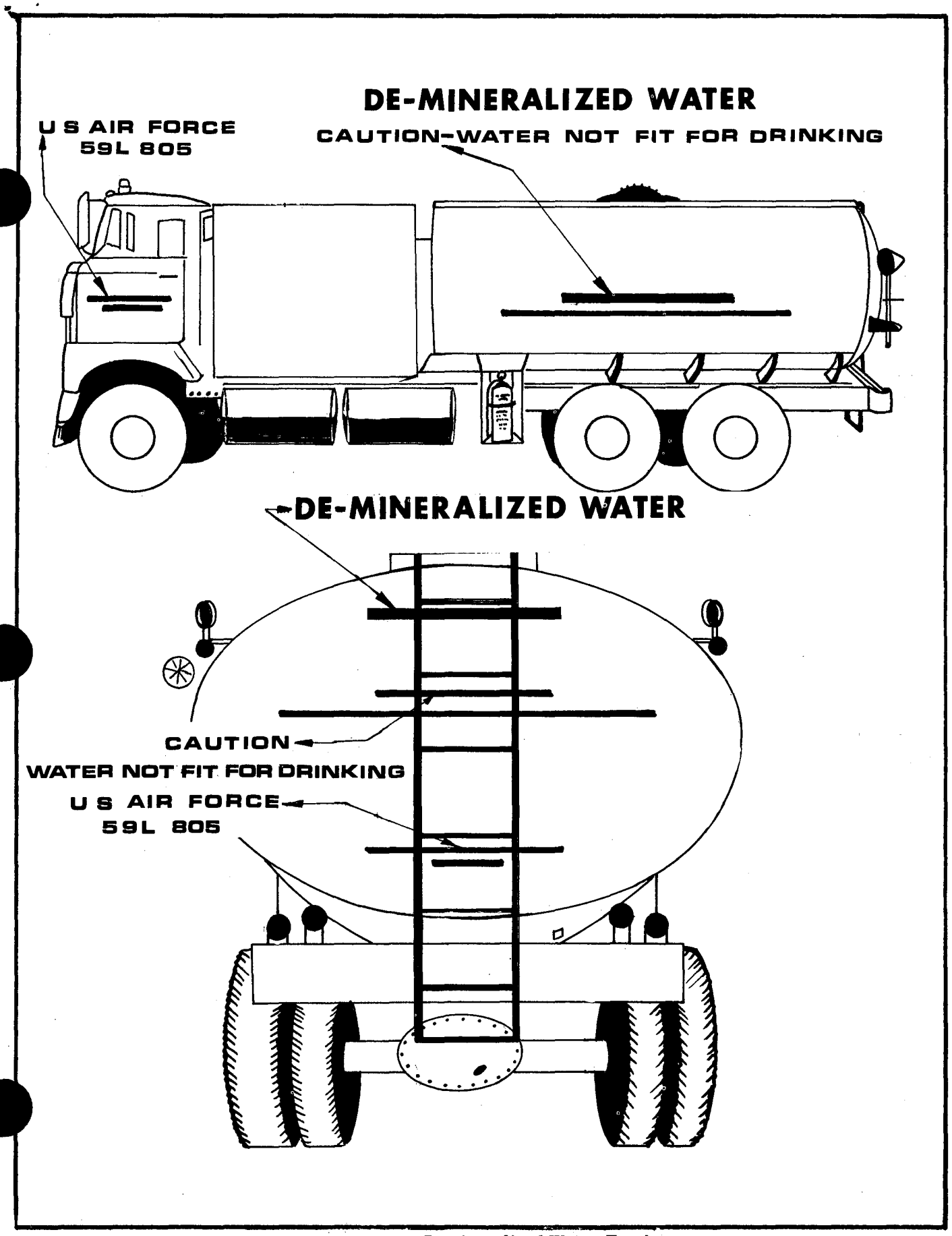

Figure 4-23. Demineralized Water Truck

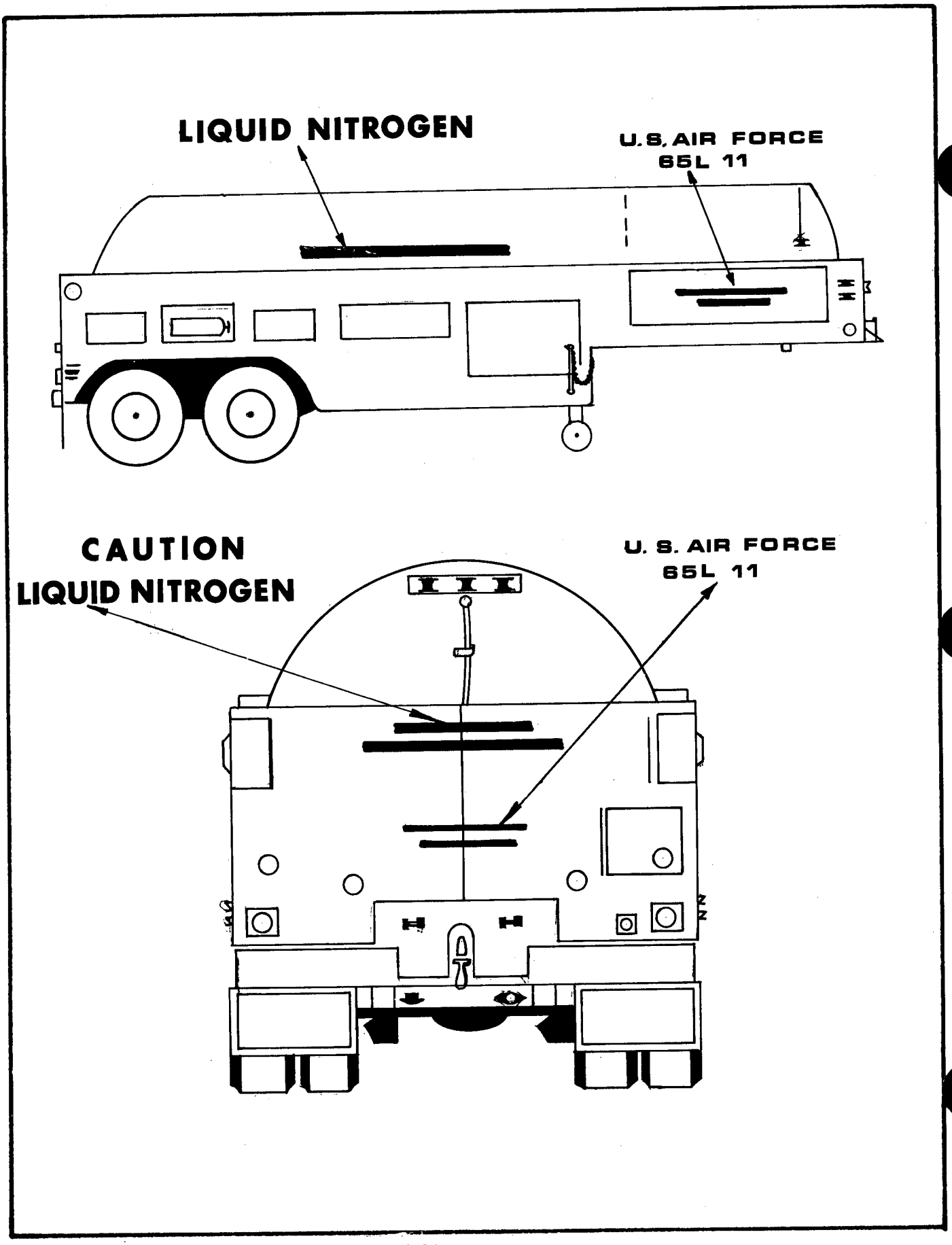

Figure 4-24. Liquid Nitrogen Unit

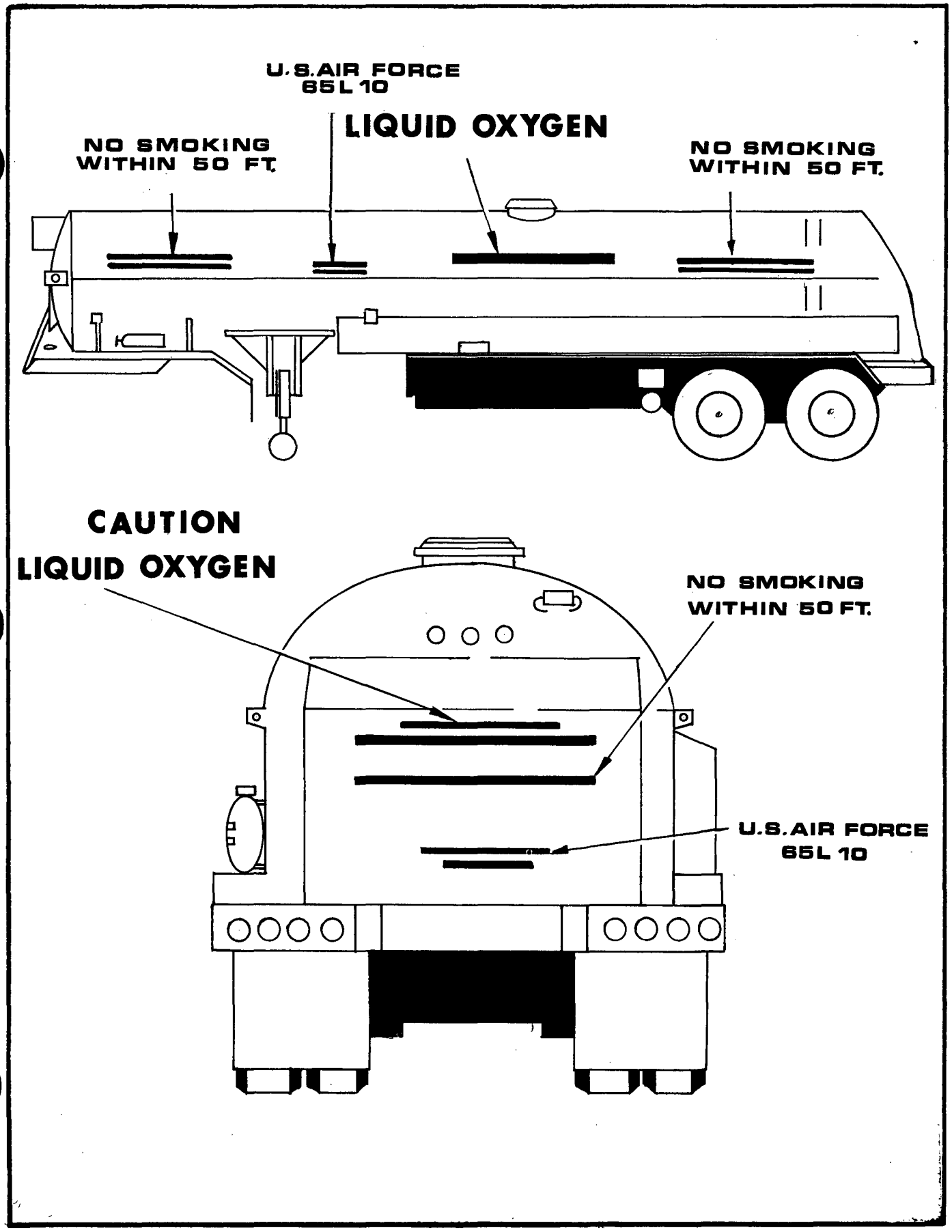

Figure 4-25. Liquid Oxygen Unit

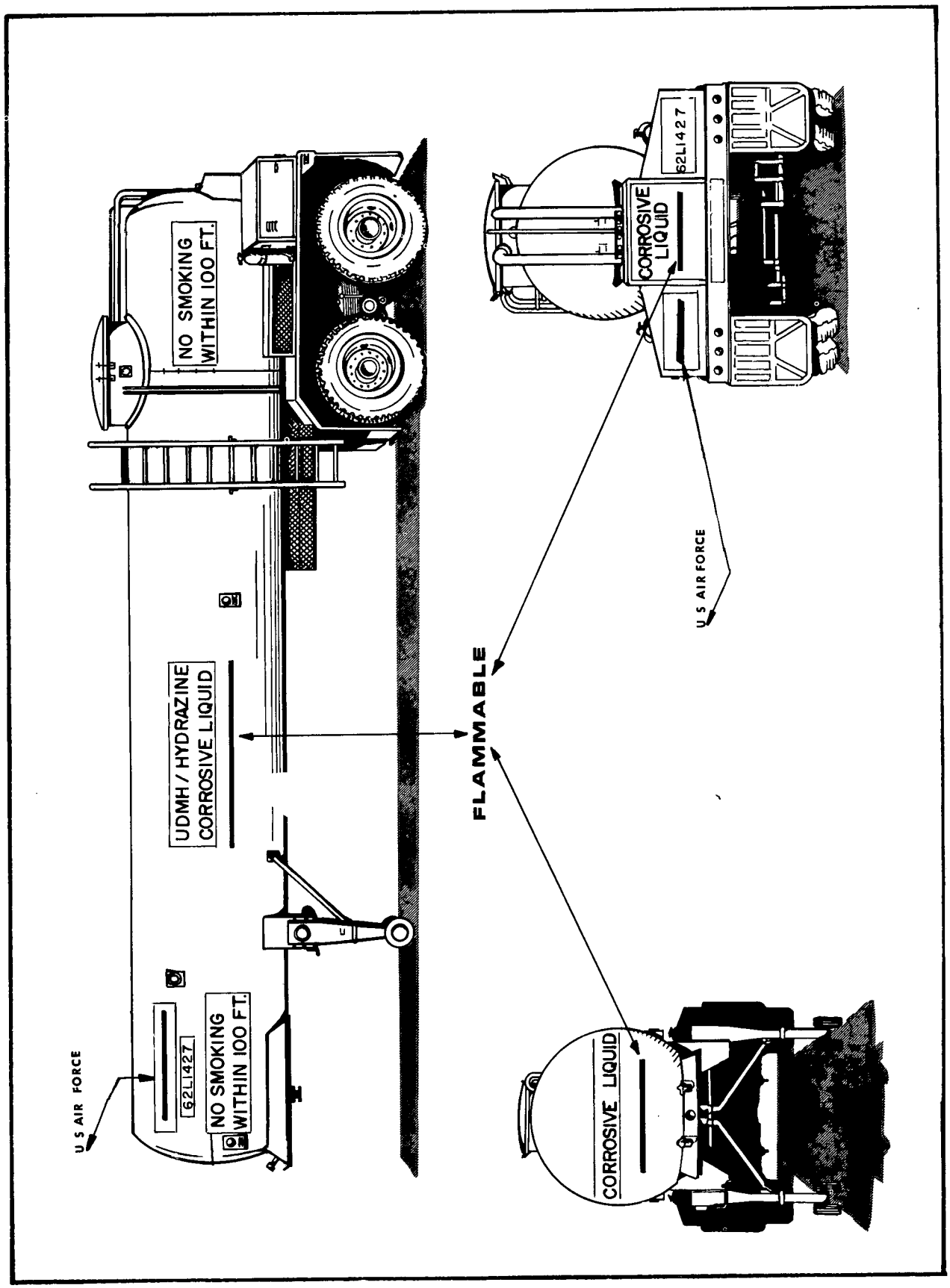

Figure 4-26. UDMH Hydrazine Semi-Trailer

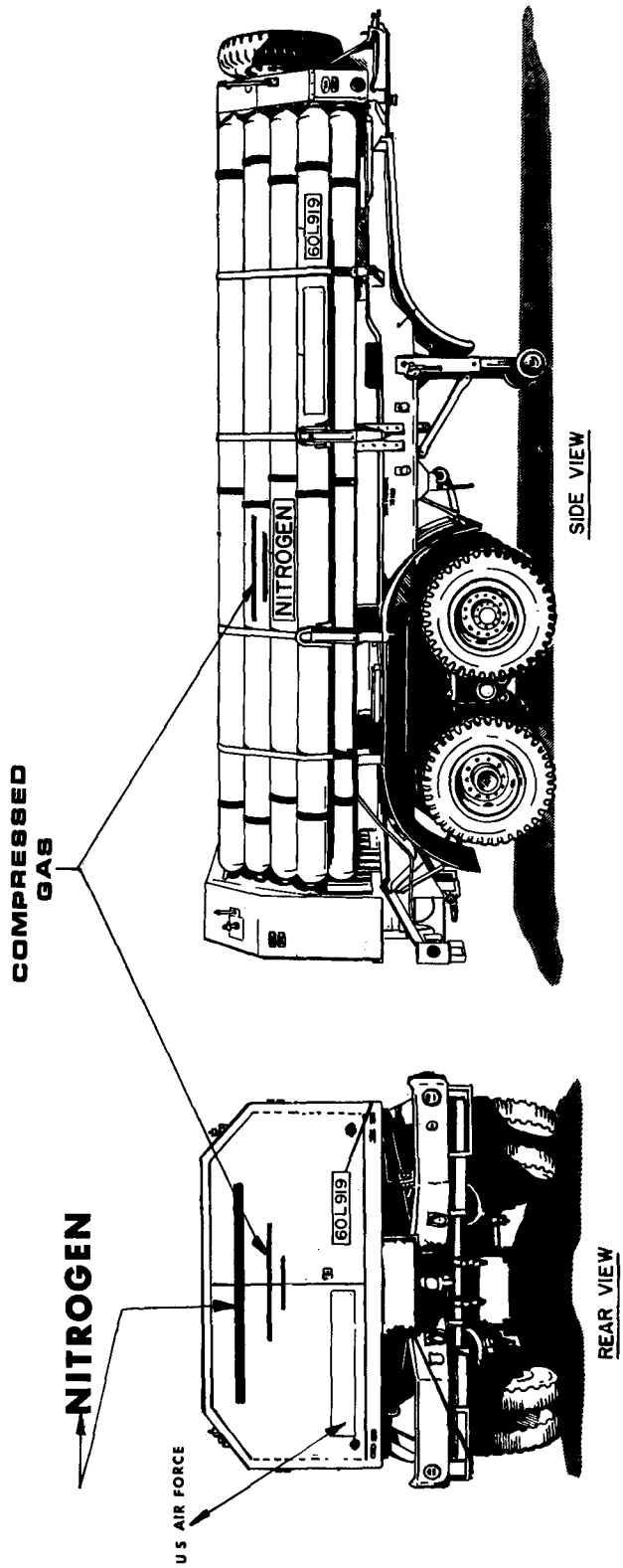

Figure 4-27. Nitrogen Semi-Trailer

Figure 4-28. Security Police Vehicles (Sheet 1 of 2)

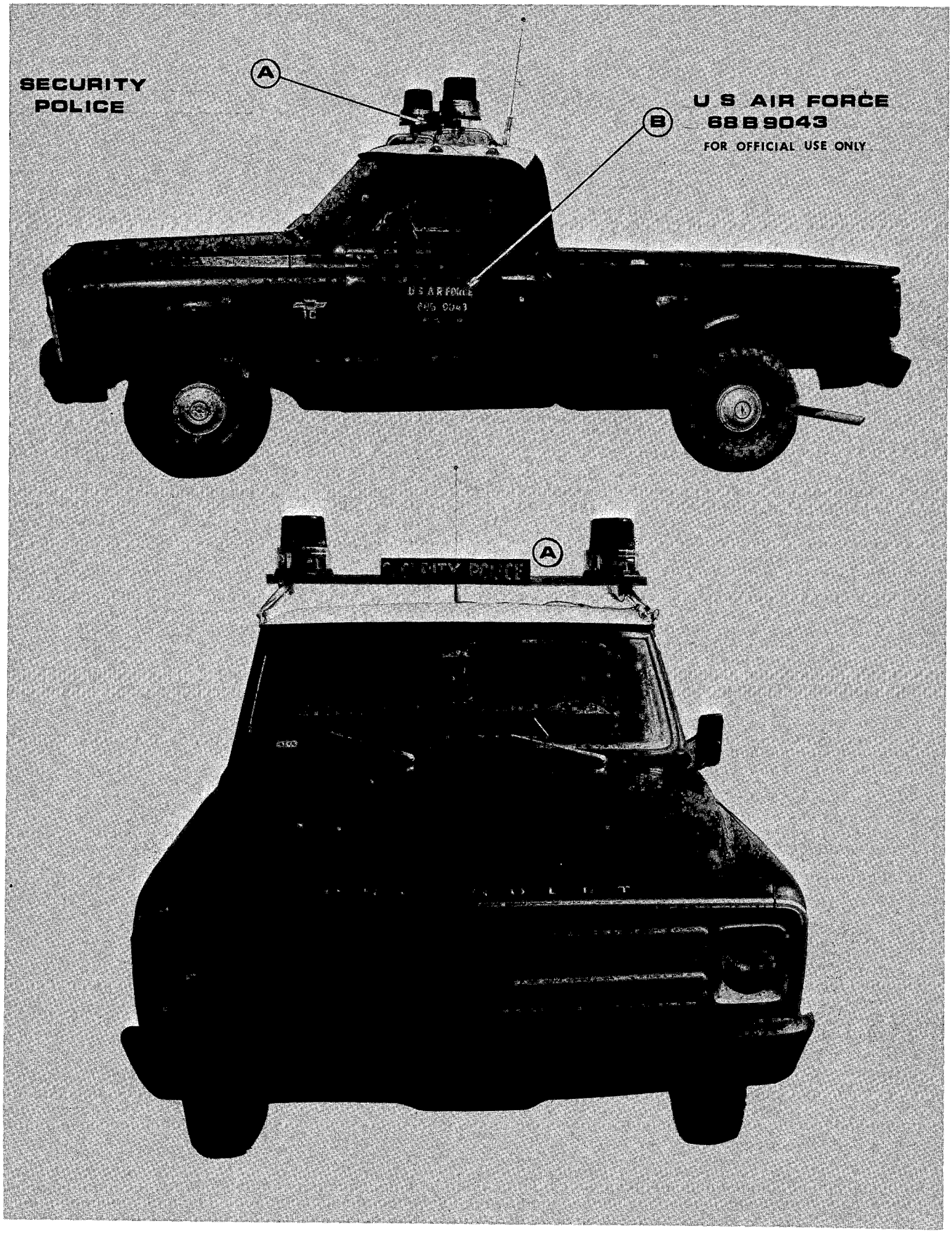

Figure 4-28. Security Police Vehicles (Sheet 2 of 2)

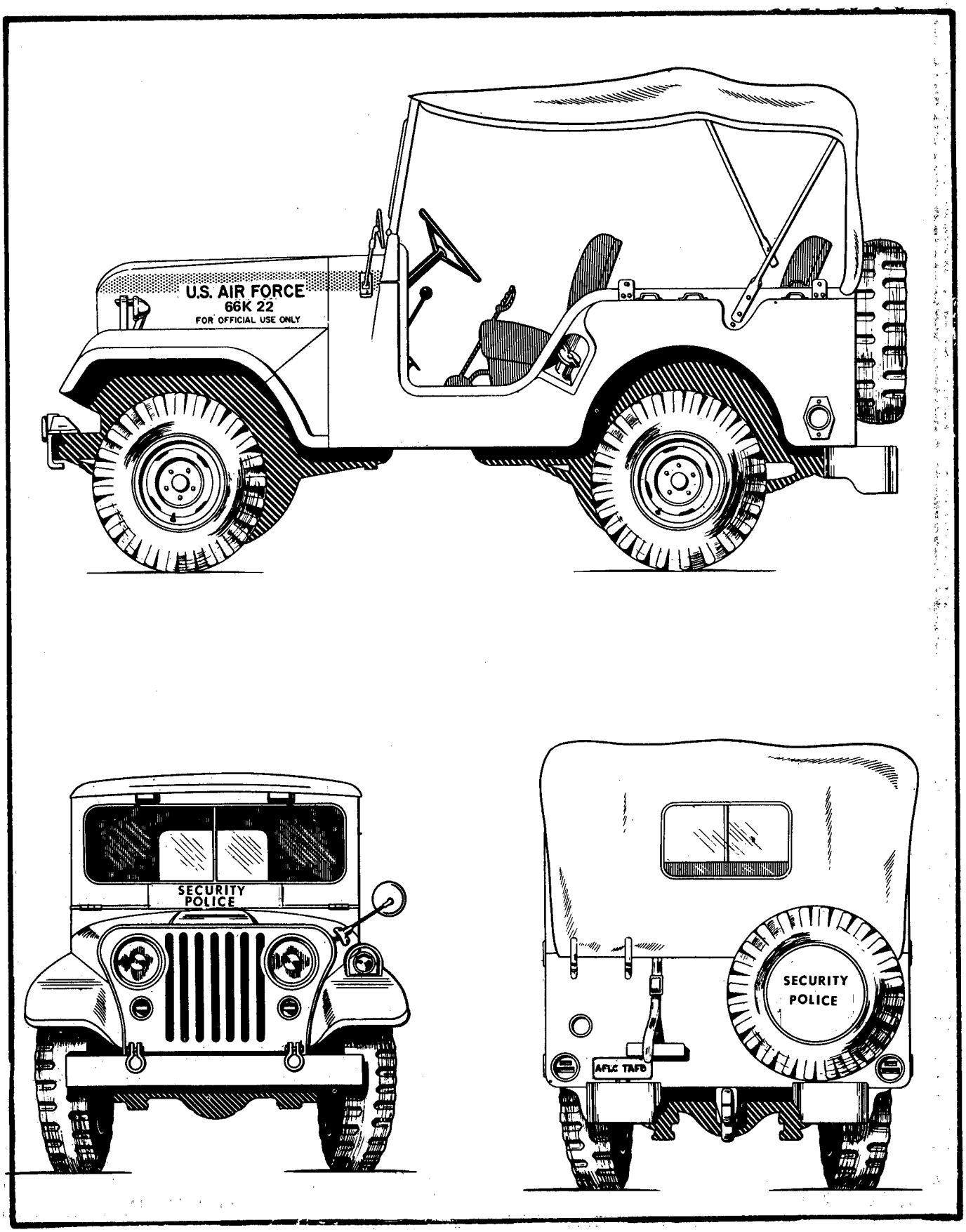

Figure 4-29. Security Police Jeep

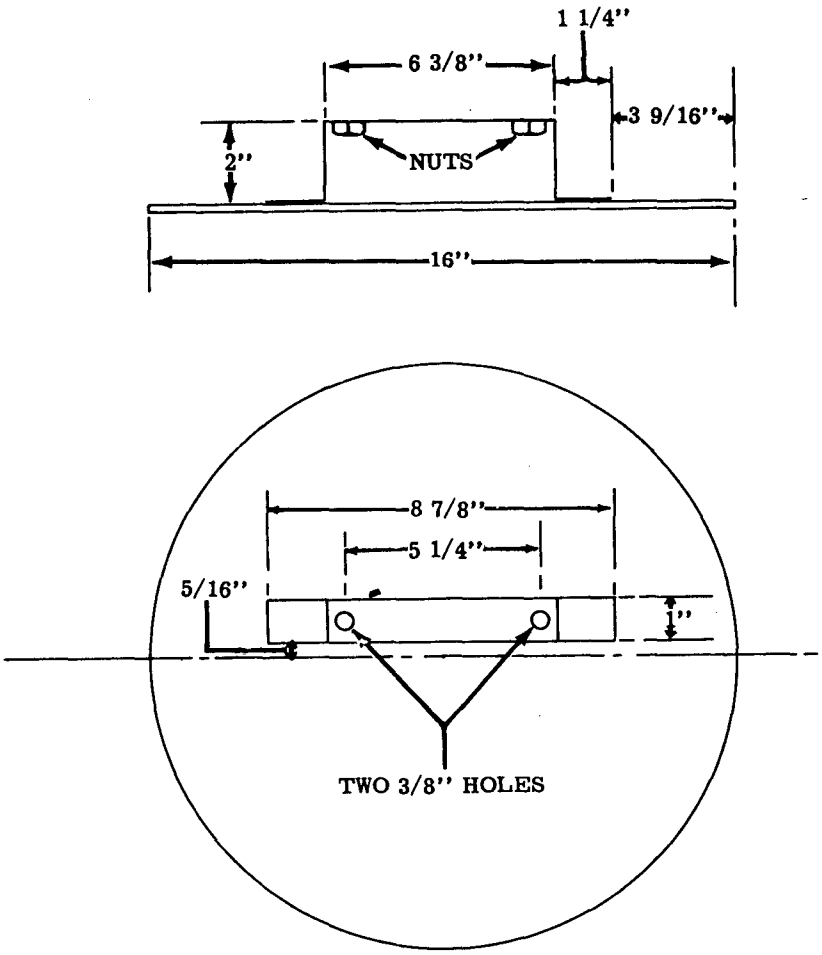

Recommended list of materials

1 Disc 16" Diameter (Minimum thickness 21 gage – 0.032 in.)
1 Steel bracket 1/16" x 1" – Developed length 13"
2 Wing bolts 3/8" x 7/8" NF (Corrosion resisting)
2 Nuts 3/8" NF (Corrosion resisting)

NOTE:

Bracket should be screwed, riveted or welded to disc
Nuts should be soldered or welded to bracket

Figure 4-30. Diagram of Security Police Sign Shown in figure 4-29 (Rear View)

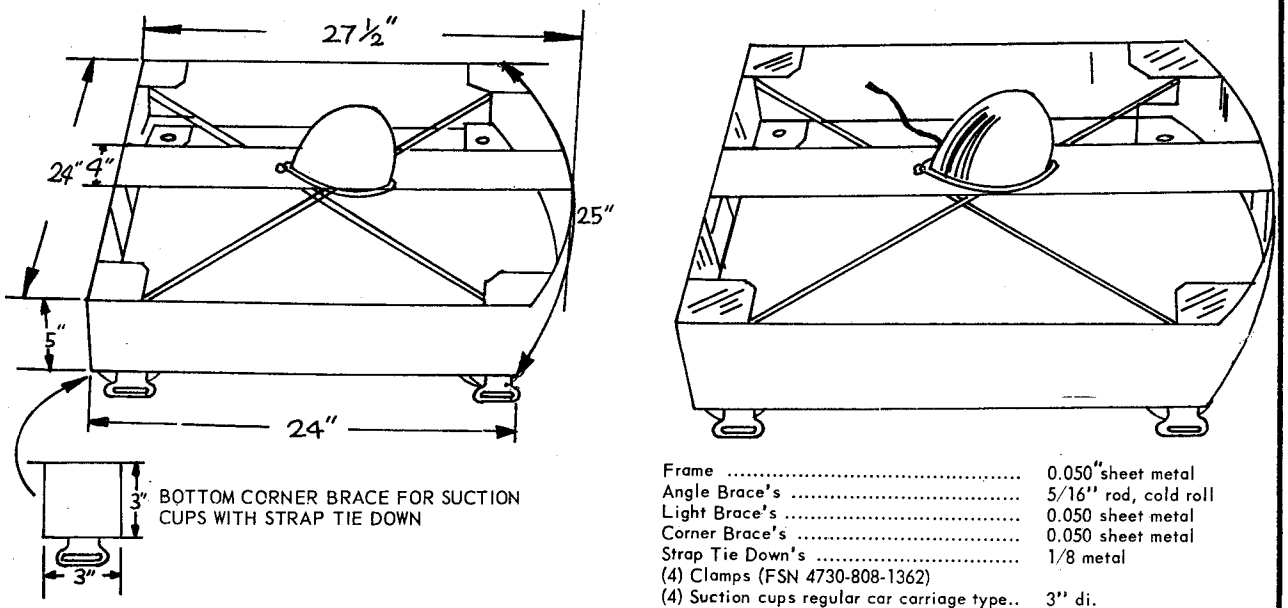

Frame	0.050" sheet metal
Angle Brace's	5/16" rod, cold roll
Light Brace's	0.050 sheet metal
Corner Brace's	0.050 sheet metal
Strap Tie Down's	1/8 metal
(4) Clamps (FSN 4730-808-1362)	
(4) Suction cups regular car carriage type..	3" di.
(8) Hooks strap car carriage type rubber coated	2" x 1"
5/16" rod braces cross approximately 2 1/2" below the light support	
(4) Straps - 0.050 sheet metal	Approximately 14" long

Figure 4-31. Removable Marking Rack

Figure 4-32. (Deleted)

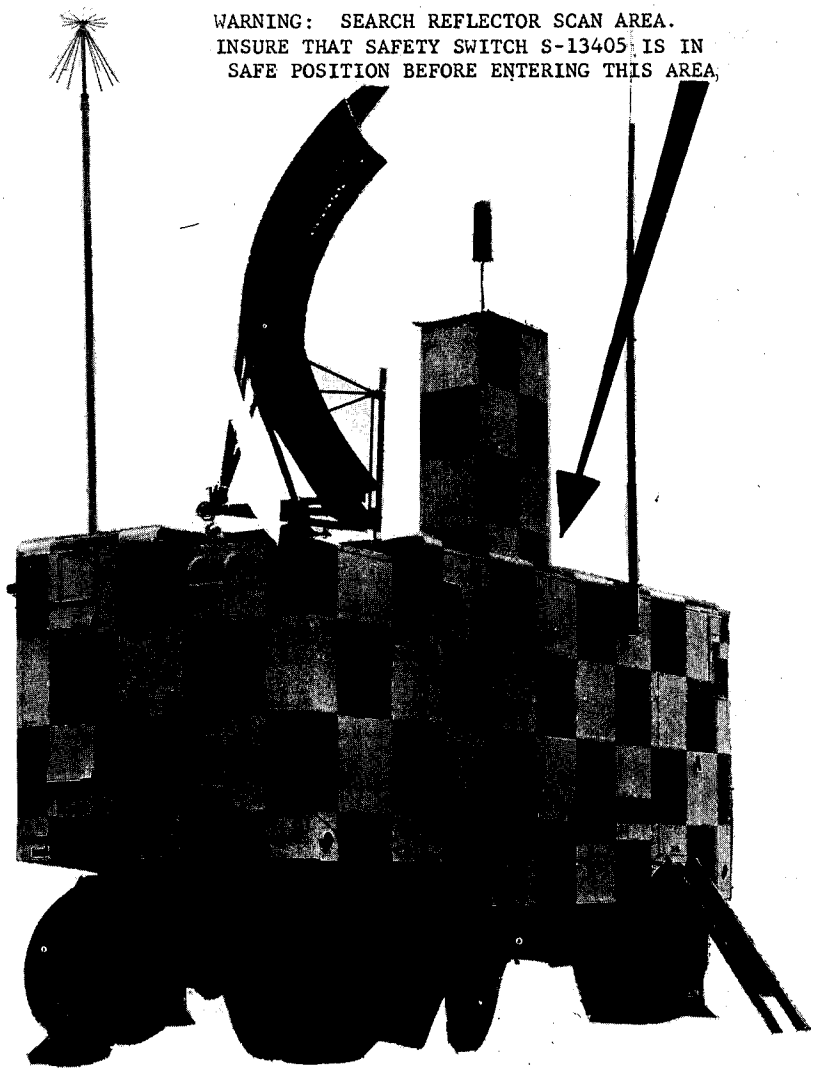

Figure 4-33. Communications/Ground Control Approach Vehicles

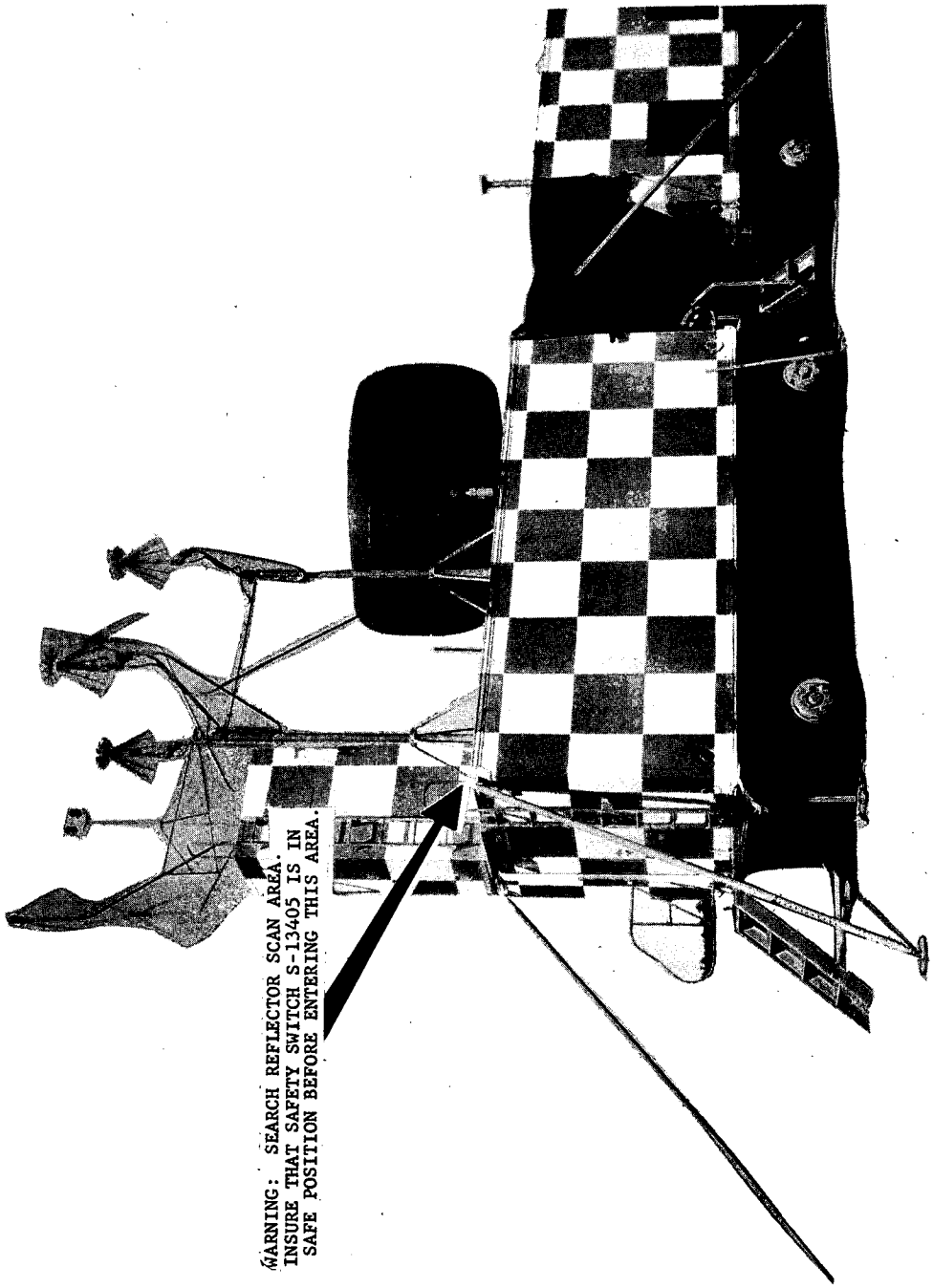

Figure 4-34. Communications/Ground Control Approach Vehicles

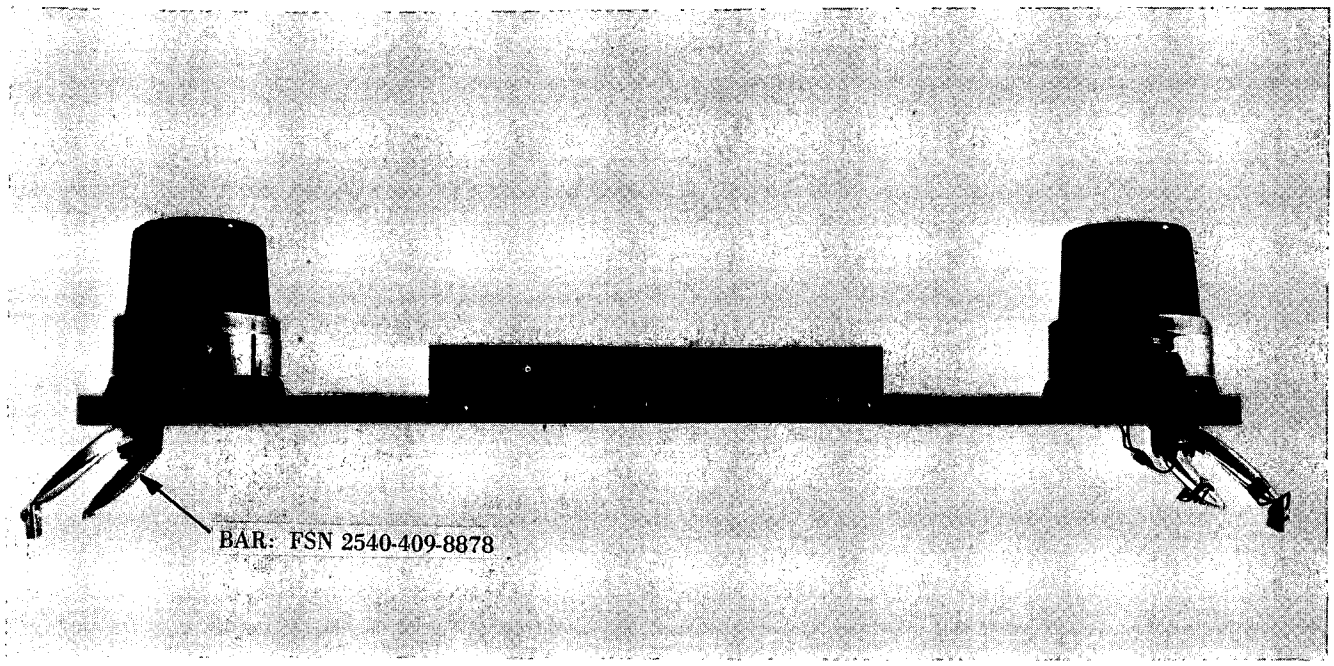

Figure 4-35. Removable Security Police Sign

CAUTION

Before Towing: Latch pintle, close trip lock, install lock pin.

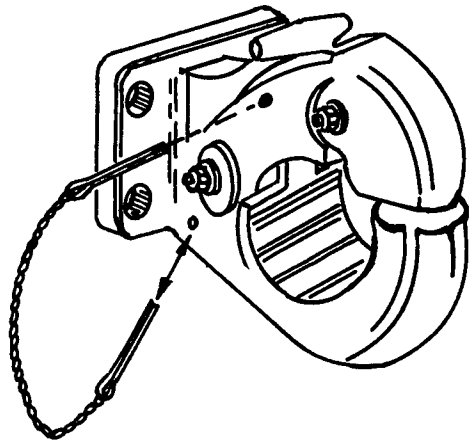

Figure 4-36. Manual Release Pintle Hooks

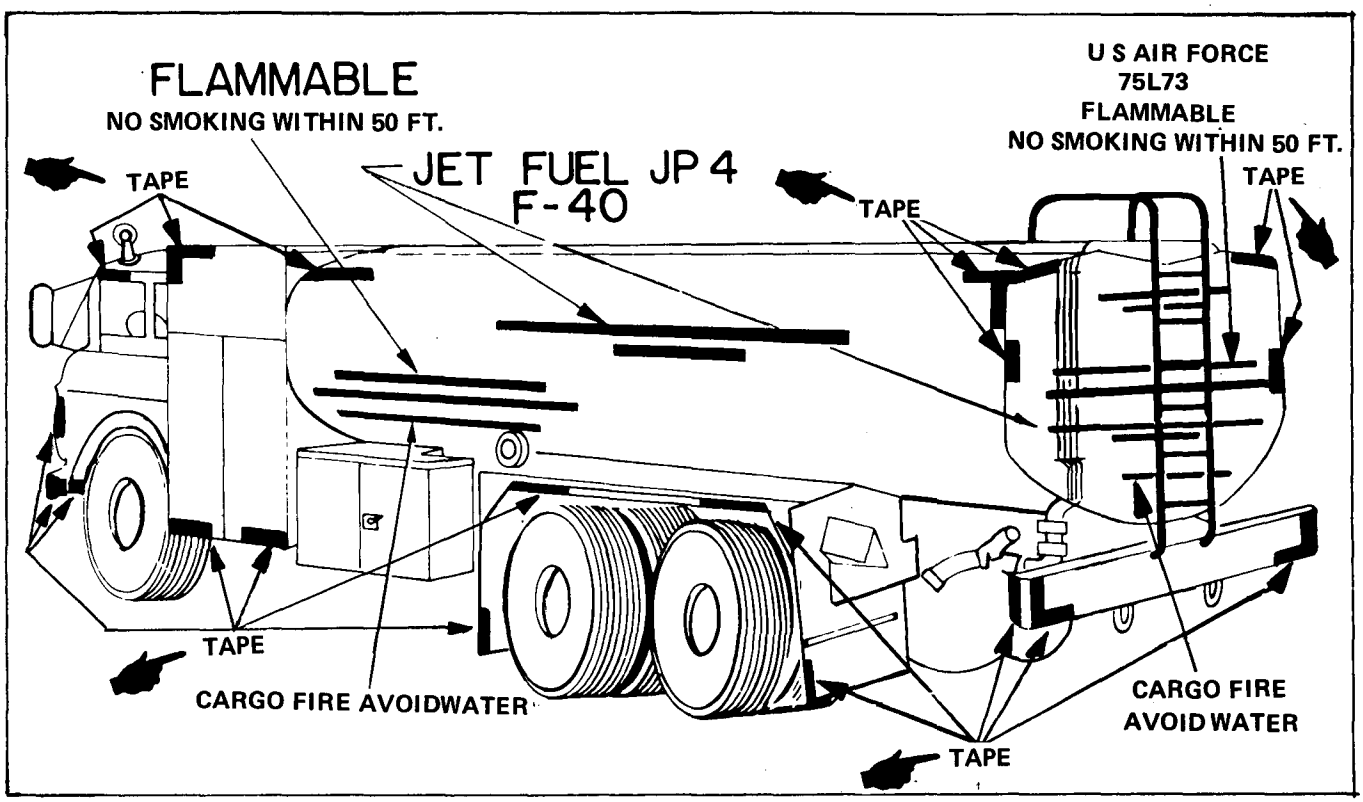

Figure 4-40. Highlighting Marking, Refueling Vehicles

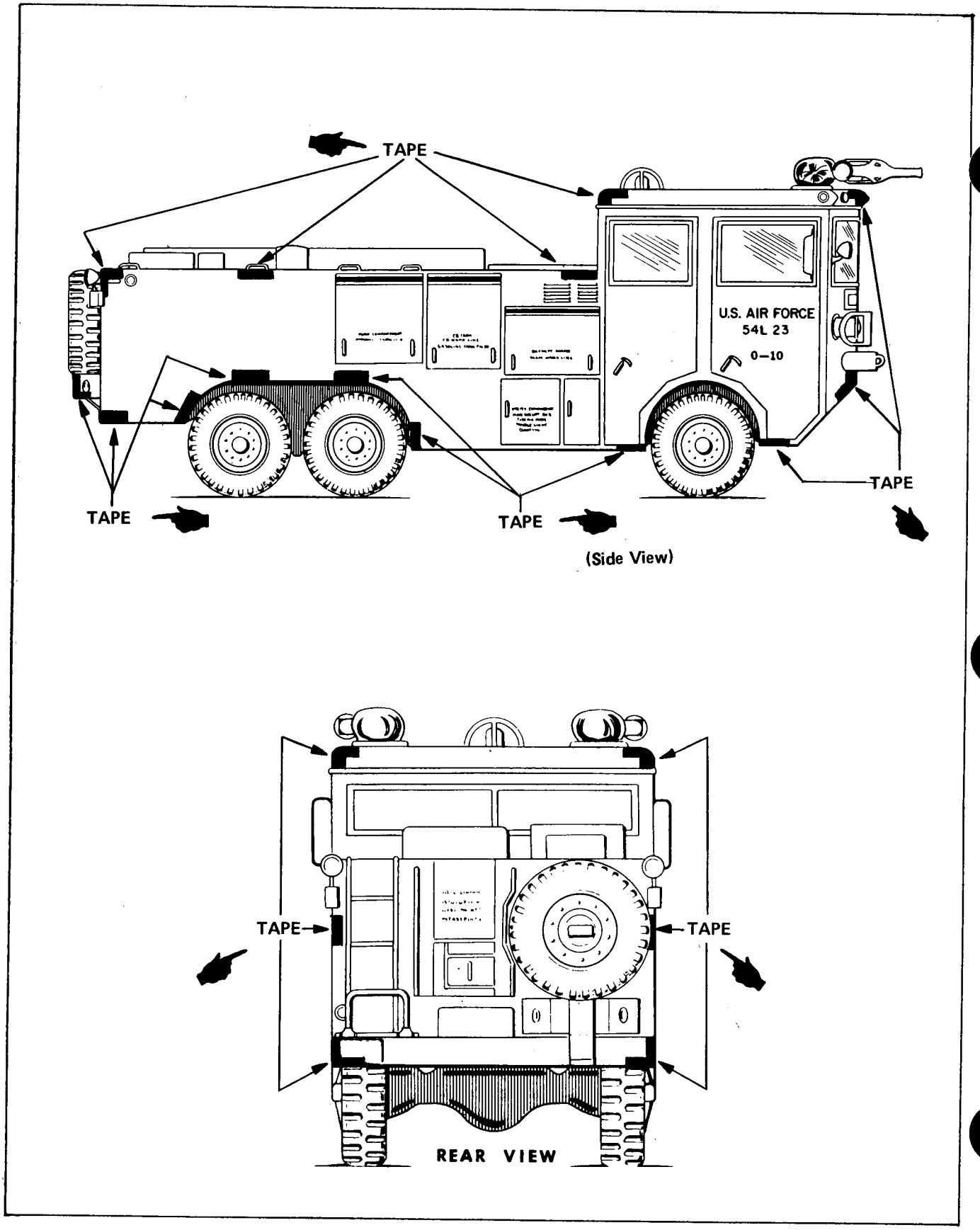

Figure 4-41. Highlighting Marking, Fire and Crash Rescue Vehicles

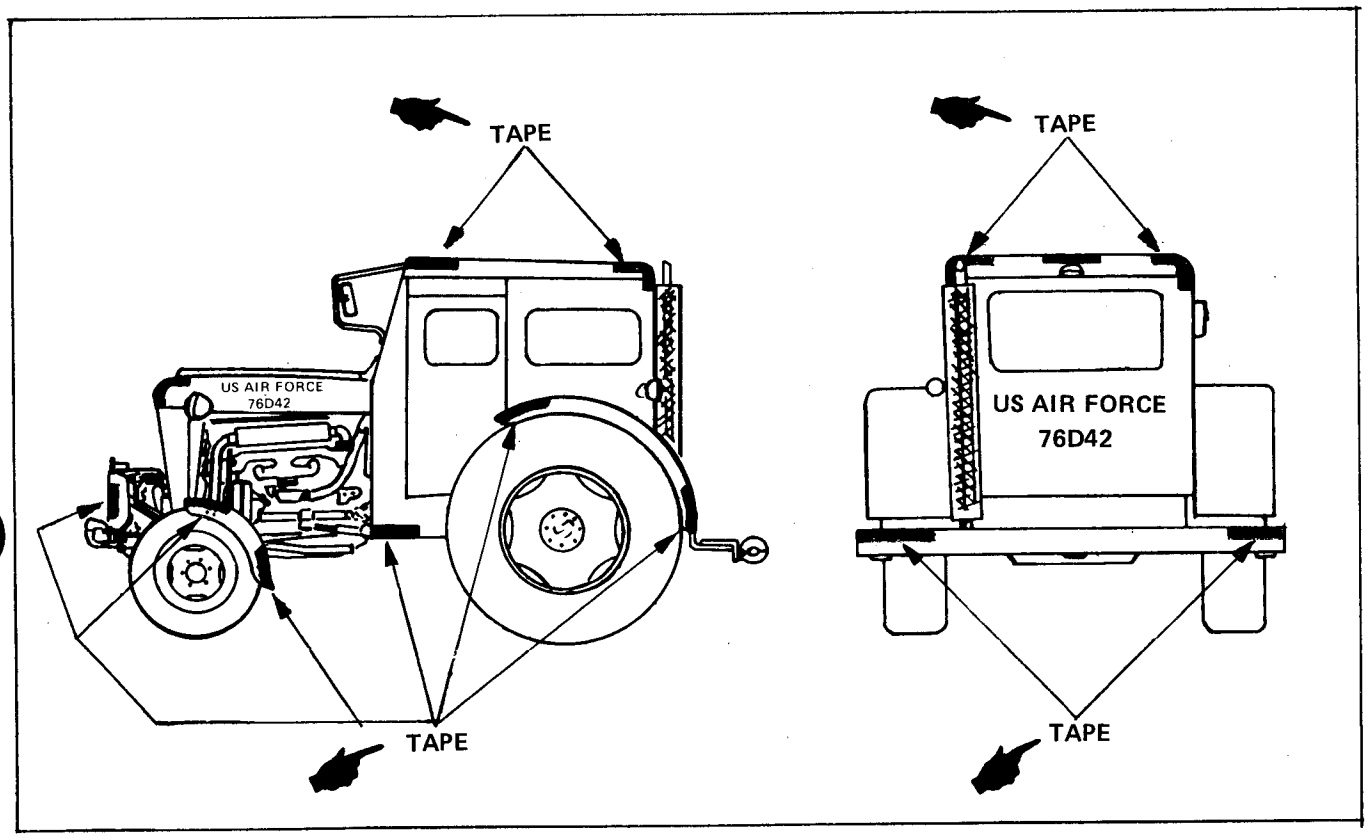

Figure 4-42. Highlighting Marking, AGE Towing Tractor

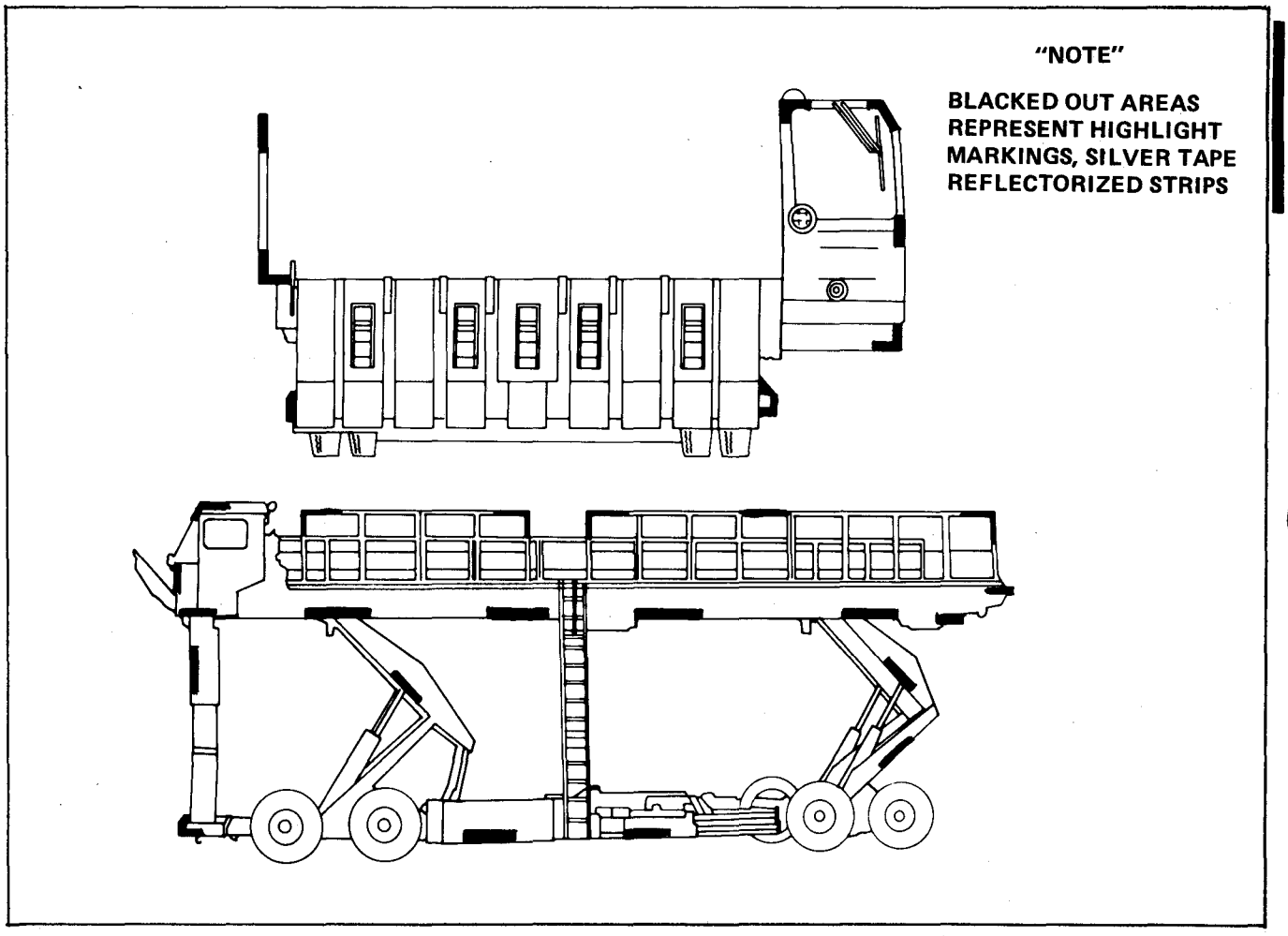

Figure 4-43. Highlighting Marking, Aircraft Cargo Handling Truck

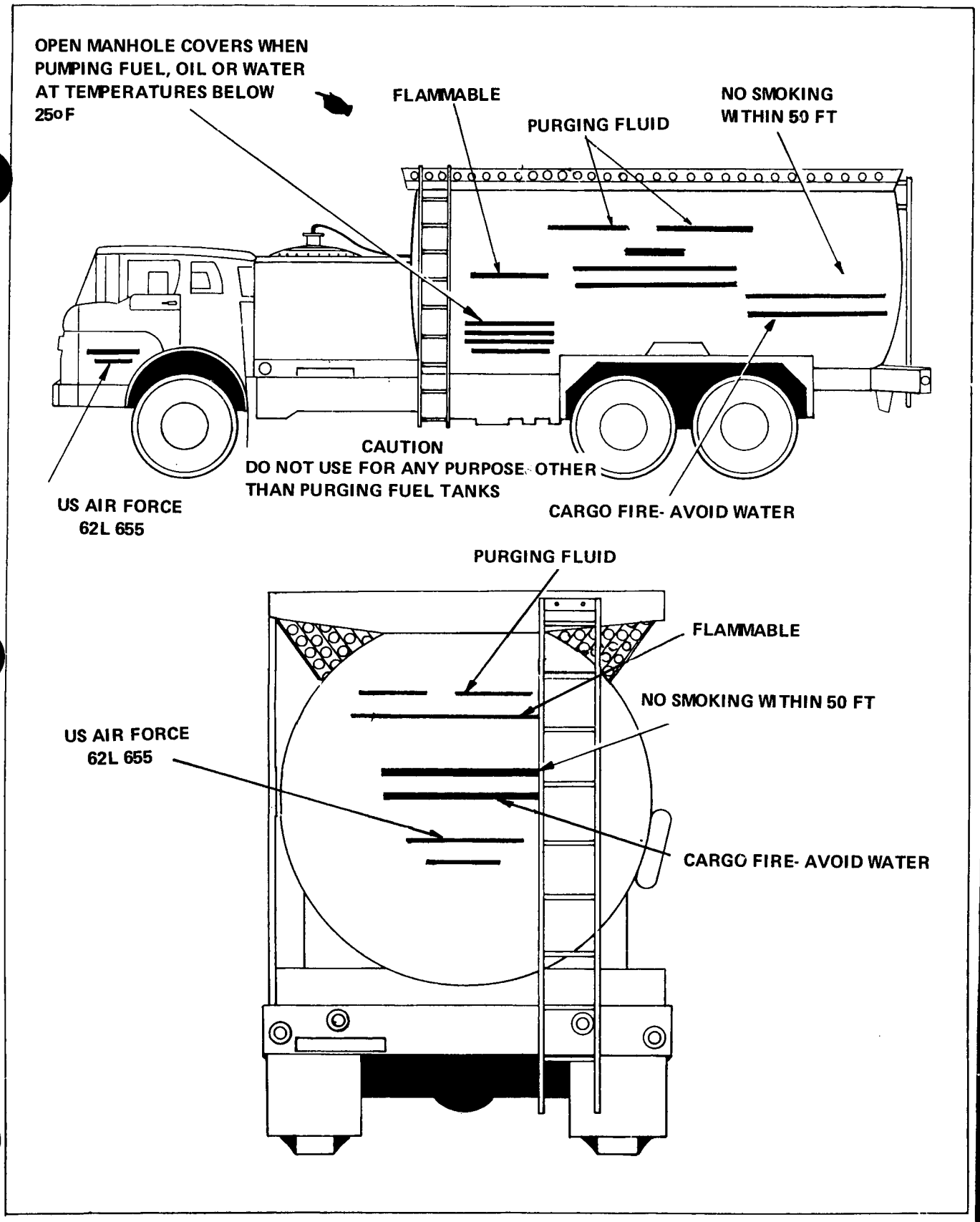

Figure 4-44. Purging Fluid Truck

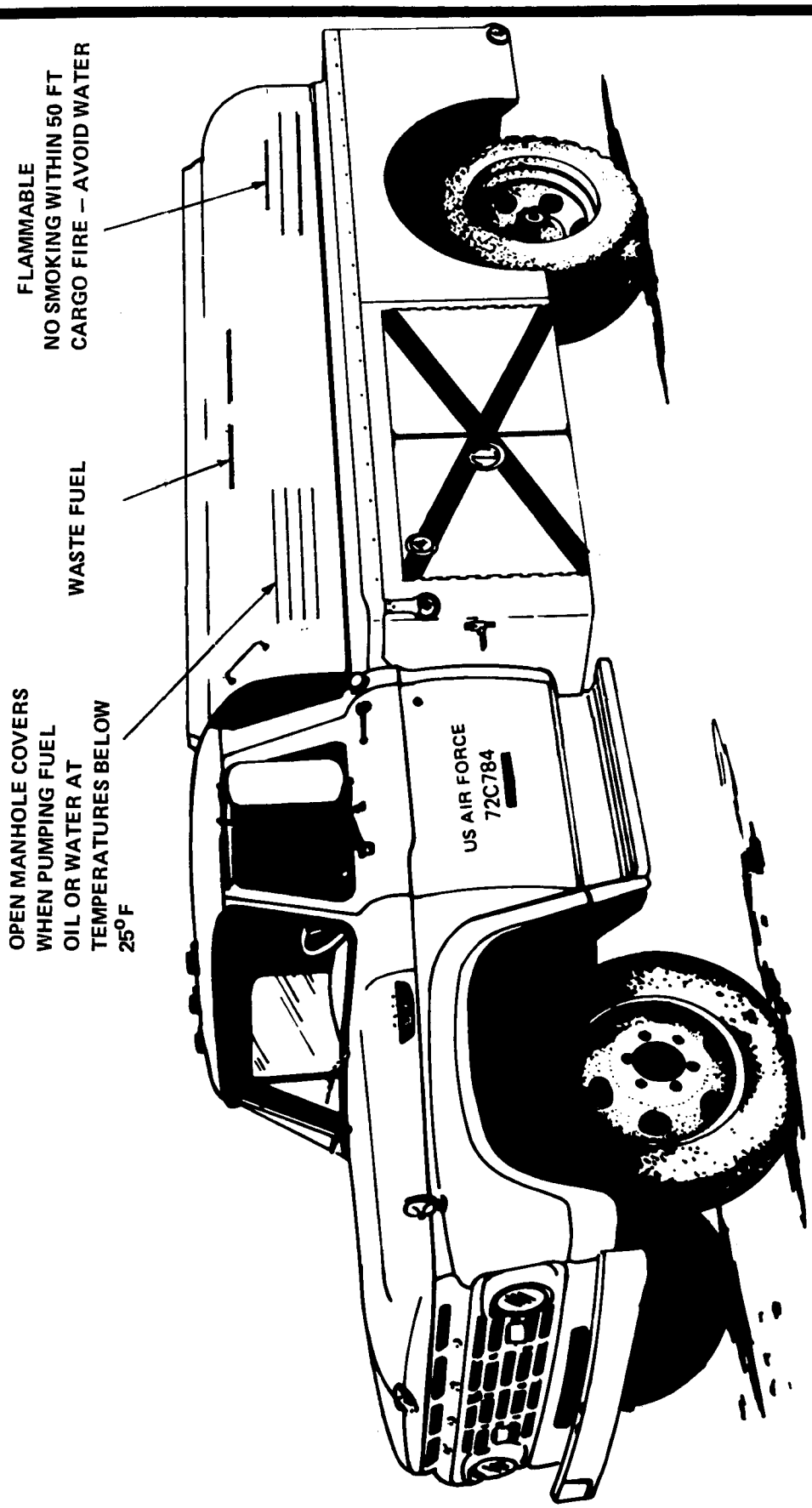

Figure 4-45. Waste Fuel Vehicle (Side View)

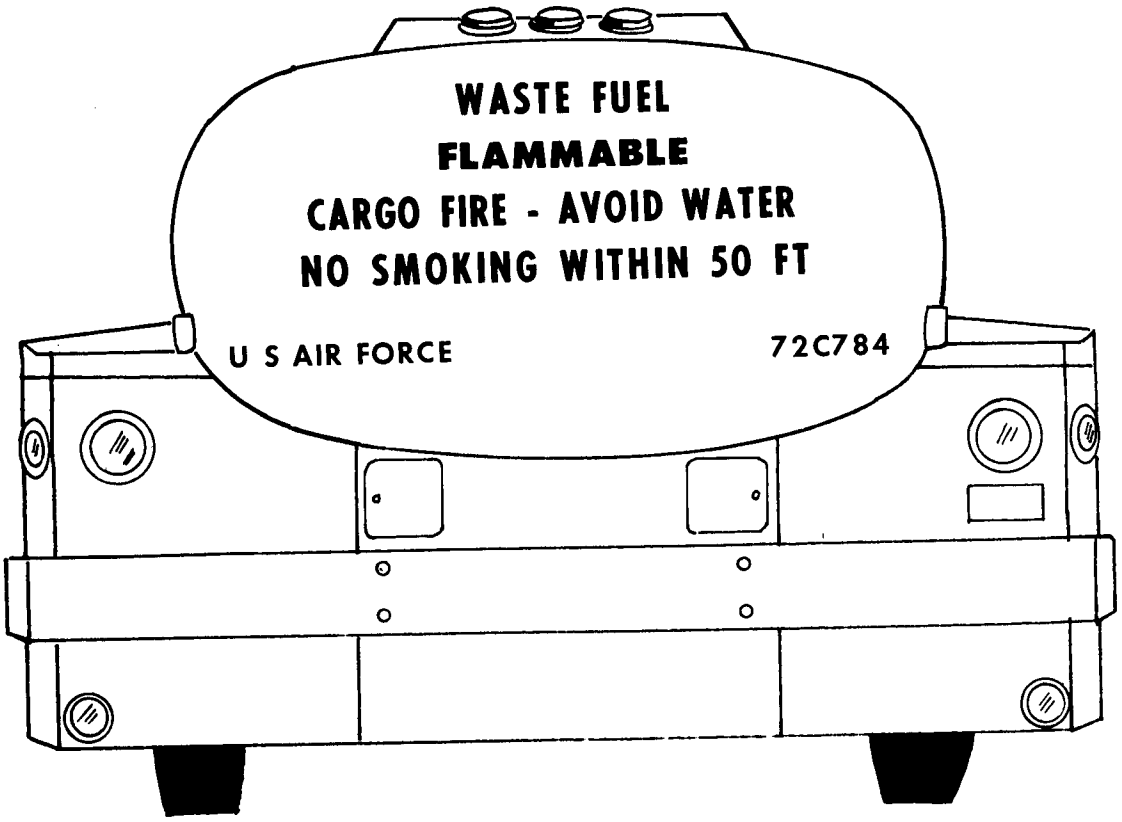

Figure 4-45. Waste Fuel Vehicle (Rear View)

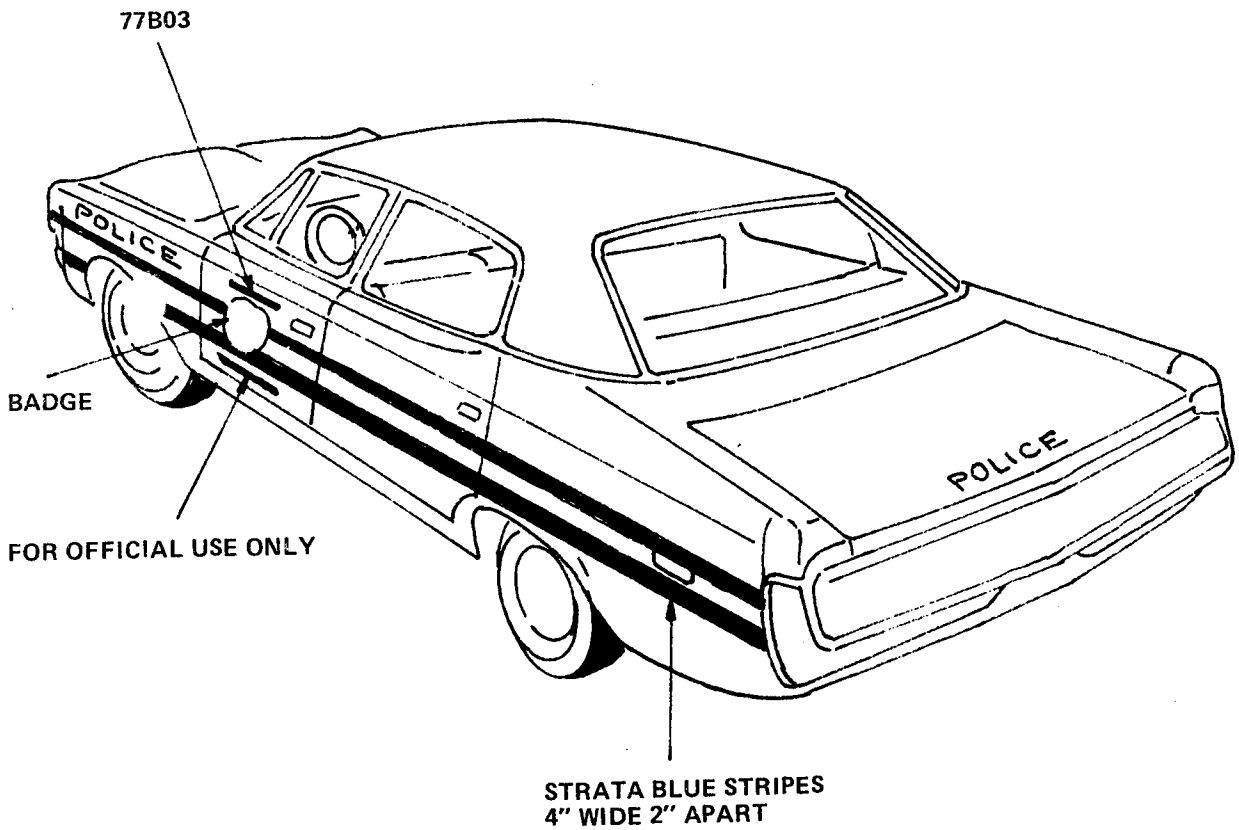

Figure 4-46. Law Enforcement Sedan

* U.S. GOVERNMENT PRINTING OFFICE: 1978--740-264/6035 Region No. 4

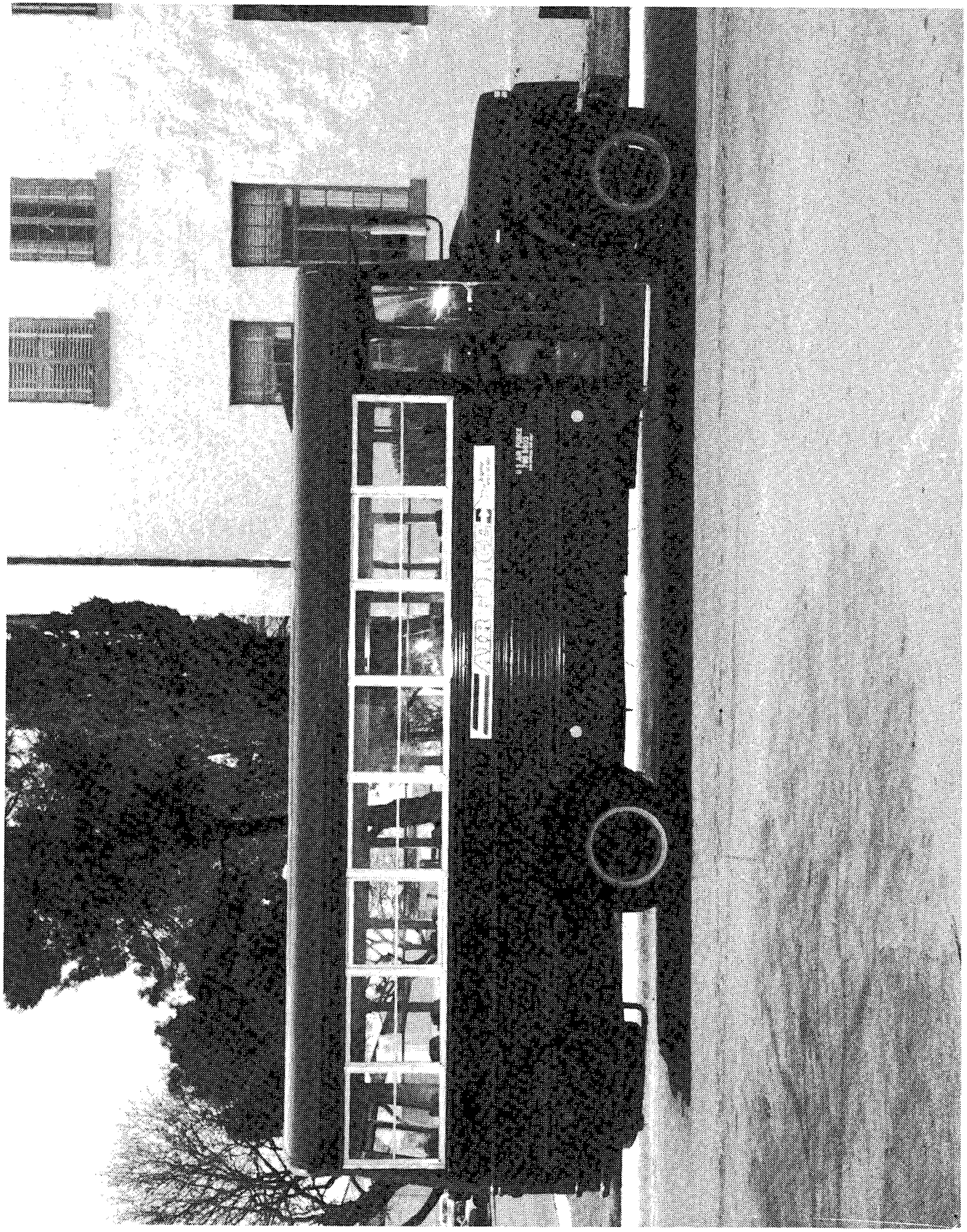

Figure 4-47. Bus

SECTION V
MATERIAL REQUIRED FOR PAINTING AND MARKING

5-1. SUPPLY INFORMATION.

a. The following materials are required for compliance with this technical order:

NOMENCLATURE	STOCK NO.	SOURCE
Acid -- Phosphoric metal conditioner (30 gal drum)	6850-551-9577	Ordnance
Activator, press sensitive adhesive (1 pint can)	NSL	LP
Bar roof mounting	2540-409-8878	DSA
Cleaning Compound -- Solvent; emulsion type; for general cleaning, Fed Spec P-C-576b.	6850-249-8026	GSA
Cloth -- Cotton, cheesecloth, unshrunk, white, 36 in. wide; Fed Spec CCC-C-440, Construction II, 50 yd bolt	8305-170-5063	GSA
Coating Compound -- Bituminous solvent, black, acid-proof paint with asphalt base. Spec MIL-C-4501 low solids, spraying consistency, type I (1 gal can)	8030-664-7105	GSA
Coating Compound -- Bituminous solvent, black, acid-proof paint with asphalt base, Spec MIL-C-4501, medium solids, brushing and spraying consistency, type II (1 gal)	8030-290-5141	GSA
Coating Compound -- Metal pretreatment, acid-resin, Spec MIL-C-15328A, (5 gal can)	8030-558-3840	AF Stock
Compound -- Grease cleaning type I -- nonphenolic (55 gal drum)	6850-616-9521	GSA
Compound -- Grease cleaning type II -- phenolic (55 gal drum)	6850-559-8384	GSA
Compound – high pressure, steam cleaning, alkaline powder, for metal surfaces, 125 lb drum	6850-894-1277	GSA
Enamel-green, color No. 24052 FED, SPEC. MIL-C-83286	8010-01-023-4261	GSA
Enamel -- Green Semi-Gloss, Color No. 24087, Fed Spec TT-E-529	8010-298-3865	GSA
Enamel -- Green Olive Drab, Color No. 34087, Fed Spec TT-E-527	8010-297-0560	GSA

NOMENCLATURE	STOCK NO.	SOURCE
Compound -- high-pressure steam cleaning, powder, for cleaning various metal surfaces, 25 lb container	6850-664-7056	GSA
Compound -- Insulating, electric, liquid, Spec. MIL-V-1137, type AN, grade CA	5970-280-4920	AF Stock
Disk - abrasive, closed coating; 16 grit, 7 in. diameter, 7/8 in. arbor hole	5345-558-5929	GSA
Disk - abrasive, closed coating; 24 grit, 7 in. diameter, 7/8 in. arbor hole	5345-558-5928	GSA
Disk - abrasive, closed coating; 36 grit. 7 in. diameter, 7/8 in. arbor hole	5345-558-5927	GSA
Disk - abrasive, open coating; grade 0, 7 in. diameter, without arbor hole	5345-186-8248	DOD
Disk - abrasive, open coating; grade 2, 7 in. diameter, without arbor hole	5345-186-8240	DOD
Disk - abrasive; open coating; grade 4, 7 in. diameter, without arbor hole	5345-186-8256	DOD
Disk - abrasive; open coating; grade 3, 9-1/8 in. diameter, without arbor hole	5345-186-8243	DOD
Enamel - Black, full gloss, color No. 17038, Fed Spec TT-E-489	8010-527-2050	GSA
Enamel - Black lusterless, color No. 37038, Fed Spec TT-E-527	8010-297-0547	GSA
Enamel - Gray, color No. 16081, full gloss, Fed Spec TT-E-489, Type I.	8010-616-7496	GSA
Enamel - Green, semi-gloss, color No. 24533, Fed Spec TT-E-529	8010-527-3197	GSA
Enamel - Orange Yellow, full gloss, color No. 13538, Fed Spec TT-E-489	8010-690-5293	GSA
Enamel - Red, color No. 11105, full gloss, Fed Spec TT-E-489, type I	8010-616-7487	GSA
Enamel - Red, Lusterless color No. 31136, Fed Spec TT-E-527	8010-472-5512	GSA
Enamel - Strata Blue, color No. 15045, Fed Std. No. 595, Spec TT-E-489	8010-298-2287	DOD

NOMENCLATURE	STOCK NO.	SOURCE
Enamel, Alkyd Semi-Gloss, Color No. 24052, Fed Spec TT-E-529	8010-01-131-9194	GSA
Light, warning vehicular, amber rotating, 14 volts, MS5137-4	6220-947-7535	DSA/S9G
Light, warning vehicular, amber rotating, 28 volts	6220-947-7570	DSA/S9G
Light, warning, vehicular, red rotating, 28 volts, MS51317-1	6220-958-7897	DSA/S9G
Light, warning, vehicular, red rotating, 14 volts, MS51317-2	6220-892-4507	DSA/S9G
Light, warning, vehicular, blue rotating 15 volts, MS 51317-6	6220-00-947-7572	DSA/S9G
Light, warning vehicular, blue rotating, 28 volts, MS51317-5	6220-00-947-7621	DSA/S9C
Slow moving vehicle emblem	9905-00-149-1275	GSA/JGG
Enamel, Strata Blue, Color No. 15045, Fed Spec MIL-C-83286	8010-00-839-5663	GSA

NOMENCLATURE	STOCK NO.	SOURCE
Non-slip fabric, pressure sensitive adhesive backing; 6 in. x 24 in., 50 pieces per box - black, green, red or silver	7220-823-7422	GSA
Non-slip fabric, pressure sensitive adhesive backing; 6 in. x 60 ft. roll - black, green, red or silver	7220-823-7419	GSA
Non-slip fabric, pressure sensitive adhesive backing; 24 in. x 60 ft. roll - black, green, red or silver	7220-823-7420	GSA
Paint - Bituminous coal tar, pitch base, Spec MIL-C-450a	8030-290-5141	GSA
Paint, reflective white, 12 lb can	8010-965-2500	GSA
Paint, Strata blue, 16 oz. aerosol can	8010-988-1458	GSA
Polyurethane Coating, Green Color No. 24052, FED SPEC. MIL-C-83286	8010-01-023-4261	GSA
Primer coating - metal; lacquer-proof, iron oxide red, Fed Spec TT-P-664	8010-161-7274	DOD
Primer coating - metal; zinc chromate, Spec MIL-P-00735A	8010-161-7419	GSA
Primer - synthetic refinishing, Spec TT-P-636b (5 gal pail)	8010-161-5718	GSA
Remover - paint and varnish; alkali type; powder form, Spec MIL-R-25134	8010-165-5536	DOD
Respirator - organic vapor	4240-00-069-2684	AF Stock
Respirator - paint spray	4240-00-022-2524	AF Stock
Sealer, non-reflective marking edge, 8 ox. can	NSL	LP
Sealer, reflective marking edge, 8 oz. can	NSL	LP
Star Symbol - White lusterless, pressure sensitive adhesive backing; code No. 654L-USPSW, 6 in.	7690-781-2490	GSA
Star Symbol - White lusterless, pressure sensitive adhesive backing; code No. 655L-USPSW; 10 in.	7690-781-1497	GSA
Star Symbol - White lusterless, pressure sensitive adhesive backing; code No. 656L-USPSW; 12 in.	7690-781-2498	GSA
Star Symbol - White lusterless, pressure sensitive adhesive backing; code No. 657L-USPSW; 16 in.	7690-781-2499	GSA

NOMENCLATURE	STOCK NO.	SOURCE
Star Symbol - White lusterless, pressure sensitive adhesive backing; code No. 658L-USPSW; 20 in.	7690-781-2500	GSA
Star Symbol - White lusterless, pressure sensitive adhesive backing; code No. 659L-USPSW; 25 in.	7690-781-2501	GSA
Star Symbol - White lusterless, pressure sensitive adhesive backing; code No. 660L-USPSW; 32 in.	7690-781-2502	GSA
Star Symbol - White lusterless, pressure sensitive adhesive backing; code No. 661L-USPSW; 36 in.	7690-781-2503	GSA
Steel, sheet - carbon, hot rolled, annealed; 0.063 in. thick, Fed Spec QQ-S-636	9515-640-4201	AF Stock
Tape - Masking, scotch manila, creped, 1 in. wide, 60 yd. roll type I	7510-266-6712	GSA
Tape - Pressure sensitive adhesive, 2 in. wide, oil and water resistant, 60 yd. roll	8135-820-7467	GSA
Tape, reflective, pressure sensitive adhesive backing; 1 in. x 50 yd. roll - 3270 silver	9390-949-7595	GSA
Tape, reflective, pressure sensitive adhesive backing; 2 in. x 50 yd. roll - 3270 silver	9390-889-3780	GSA
Tape, reflective, pressure sensitive adhesive backing; 3 in. x 50 yd. roll - 3270 silver	9390-045-8792	GSA
Tape, reflective, pressure sensitive adhesive backing; 4 in. x 50 yd. roll - 3270 silver	9390-045-8793	GSA
Tape, reflective, pressure sensitive adhesive backing; 3 in. x 50 yd. roll, 3271 yellow	9390-949-7595	GSA
Tape, reflective, pressure sensitive adhesive backing, 4 in. x 50 yd. roll, 3271 yellow	9390-949-7610	GSA
Tape, reflective, pressure sensitive adhesive backing; 1 in. x 50 yd. roll, 3271 yellow or 3272 red (P/N 137-165)	9390-949-7585	GSA
Tape, reflective, pressure sensitive adhesive backing; 2 in. x 50 yd. roll, 3271 yellow or 3272 red (P/N 137-166)	9390-949-7588	GSA
Tape, reflective, pressure sensitive adhesive backing; 3 in. x 50 yd. roll, 3272 red (P/N 137-167)	9390-949-7598	GSA
Tape, reflective, pressure sensitive adhesive backing, color blue, 4 in. wide x 50 yd. (3M P/N 580-75)	N/A	L. P. 3M Company St. Paul Mn

NOMENCLATURE	STOCK NO.	SOURCE
Tape, reflective, pressure sensitive, adhesive backing; 4 in. x 50 yd. roll, 3272 red (P/N 137-168)	9390-	GSA
Thinner - Dope and lacquer, cellulose nitrite base, Fed Spec TT-T-266b	8010-160-5787	GSA
Thinner - Synthetic resin enamel; Spec TT-T-306	8010-160-5794	GSA
Type III - Trichlorethane technical (55 gal drum)	6810-551-1487	GSA
Walkway - Compound non-slip, rough type, black, contains grit as an integral part of the coating, Spec MIL-W-5044, type II (1 gal)	5610-00-641-0427	AF Stock
Wood Preservative - Pentachloropheno 1 mixture; Fed Spec TT-W-572	8030-634-7970	GSA

b. The following markings are required for compliance with this technical order. Markings will be requisitioned from WR-ALC, Robins AFB Ga. 31098, using the part numbers and complete descriptions that follow:

PART NO.	LEGEND OR SYMBOL	COLORS		LETTER SIZE	EMBLEM SIZE
		LEGEND	BKGD.		
3613001	NO SMOKING WITHIN 50 FEET (2 lines of copy as shown)	Silver	Red	4"	10" x 42"
3613002	NO SMOKING WITHIN 50 FEET (1 line of copy as shown)	Silver	Red	4"	5" x 72"
3613003	NO SMOKING WITHIN 50 FEET (1 line of copy as shown)	Silver	Red	3"	4" x 60"
3613004	FLAMMABLE	Red	Silver	6"	7" x 54"
3613005	FLAMMABLE	Red	Silver	4"	5" x 36"
3613006	FLAMMABLE (ARC)	Red	Silver	4"	10" x 66"
3613007	NO SMOKING WITHIN 100 FEET (2 lines of copy as shown)	Silver	Red	6"	14 1/2" x 84"
3613008	JET FUEL JP4	Silver	Red	6"	7" x 55"
3613009	JET FUEL JP4	Silver	Red	4"	5" x 40"
3613012	91/96	Silver	Red	4"	5" x 30"
3613013	91/96	Silver	Red	6"	7" x 42"
3613016	WATER-ALCOHOL	Silver	Red	6"	7" x 66"

PART NO.	LEGEND OR SYMBOL	COLORS LEGEND	COLORS BKGD	LETTER SIZE	EMBLEM SIZE
3613453	UDMH	Blue	Silver	4"	
3613455	AMBULANCE (Die-cut pre-spaced)	Black	None	1-1/2"	
3613452	AMBULANCE (Die-cut prespaced)	Black	None	3"	None
3613411	RED CROSS SYMBOL (Reflective Premasked)	Omaha Orange	White	3" x 3"	4" x 4"
3613412	RED CROSS SYMBOL (Reflective Premasked)	Omaha Orange	White	6" x 6"	8" x 8"
3613413	RED CROSS SYMBOL (Reflective Premasked)	Omaha Orange	White	18" x 18"	24" x 24"
3613414	US AIR FORCE (Die-cut Prespaced)	Black	None	1-1/2"	None
3613415	Letter A (Die-cut prespaced)	Black	None	1-1/2"	2" x 1.4"
3613416	Letter B (Die-cut prespaced)	Black	None	1-1/2"	2" x 1.4"
3613417	Letter C (Die-cut prespaced)	Black	None	1-1/2"	2" x 1.4"
3613418	Letter D (Die-cut prespaced)	Black	None	1-1/2"	2" x 1.4"
3613419	Letter E (Die-cut prespaced)	Black	None	1-1/2"	2" x 1.4"
3613420	Letter F (Die-cut prespaced)	Black	None	1-1/2"	2" x 1.4"
3613421	Letter G (Die-cut prespaced)	Black	None	1-1/2"	2" x 1.4"
3613422	Letter H (Die-cut prespaced)	Black	None	1-1/2"	2" x 1.4"
3613423	Letter I (Die-cut prespaced)	Black	None	1-1/2"	2" x 0.812"
3613424	Letter J (Die-cut prespaced)	Black	None	1-1/2"	2" x 1.2"
3613425	Letter K (Die-cut prespaced)	Black	None	1-1/2"	2" x 1.4"
3613426	Letter L (Die-cut prespaced)	Black	None	1-1/2"	2" x 1.2"
3613427	Letter M (Die-cut prespaced)	Black	None	1-1/2"	2" x 1.625"
3613428	Letter N (Die-cut prespaced)	Black	None	1-1/2"	2" x 1.4"
3613429	Letter O (Die-cut prespaced)	Black	None	1-1/2"	2" x 1.4"
3613430	Letter P (Die-cut prespaced)	Black	None	1-1/2"	2" x 1.4"
3613431	Letter Q (Die-cut prespaced)	Black	None	1-1/2"	2" x 1.4"
3613432	Letter R (Die-cut prespaced)	Black	None	1-1/2"	2" x 1.4"
3613433	Letter S (Die-cut prespaced)	Black	None	1-1/2"	2" x 1.4"
3613434	Letter T (Die-cut prespaced)	Black	None	1-1/2"	2" x 1.2"
3613435	Letter U (Die-cut prespaced)	Black	None	1-1/2"	2" x 1.4"
3613436	Letter V (Die-cut prespaced)	Black	None	1-1/2"	2" x 1.4"
3613437	Letter W (Die-cut prespaced)	Black	None	1-1/2"	2" x 1.625"
3613438	Letter X (Die-cut prespaced)	Black	None	1-1/2"	2" x 1.4"
3613439	Letter Y (Die-cut prespaced)	Black	None	1-1/2"	2" x 1.4"
3613440	Letter Z (Die-cut prespaced)	Black	None	1-1/2"	2" x 1.4"
3613441	Number 1 (Die-cut prespaced)	Black	None	1-1/2"	2" x 1"
3613442	Number 2 (Die-cut prespaced)	Black	None	1-1/2"	2" x 1.3"
3613443	Number 3 (Die-cut prespaced)	Black	None	1-1/2"	2" x 1.3"
3613444	Number 4 (Die-cut prespaced)	Black	None	1-1/2"	2" x 1.3"
3613445	Number 5 (Die-cut prespaced	Black	None	1-1/2"	2" x 1.3"
3613446	Number 6 (Die-cut prespaced)	Black	None	1-1/2"	2" x 1.3"
3613447	Number 7 (Die-cut prespaced)	Black	None	1-1/2"	2" x 1.3"
3613448	Number 8 (Die-cut prespaced)	Black	None	1-1/2"	2" x 1.3"
3613449	Number 9 (Die-cut prespaced)	Black	None	1-1/2"	2" x 1.3"
3613450	Number 0 (Die-cut prespaced)	Black	None	1-1/2"	2" x 1.3
3613451	FOR OFFICIAL USE ONLY (Die-cut prespaced)	Black	None	3/4"	None
3613456	AMBULANCE (Die-cut pre-spaced)	Black	None	3"	None
3613457	AMBULANCE (Reflective, die-cut prespaced)	Silver	None	1-1/2"	

PART NO.	LEGEND OR SYMBOL	COLORS		LETTER SIZE	EMBLEM SIZE
		LEGEND	BKGD.		
3613458	POLICE (die-cut prespaced)	Blue	None	7"	
3613459	POLICE (die-cut prespaced)	Blue	None	4"	
3613460	FOR OFFICIAL USE ONLY (die-cut prespaced)	Blue	None	1"	
3613461	Letter B (die-cut prespaced)	Blue	None	1"	
3613462	Number 1 (die-cut prespaced)	Blue	None	1"	
3613463	Number 2 (die-cut prespaced)	Blue	None	1"	
3613464	Number 3 (die-cut prespaced)	Blue	None	1"	
3613465	Number 4 (die-cut prespaced)	Blue	None	1"	
3613466	Number 5 (die-cut prespaced)	Blue	None	1"	
3613467	Number 6 (die-cut prespaced)	Blue	None	1"	
3613468	Number 7 (die-cut prespaced)	Blue	None	1"	
3613469	Number 8 (die-cut prespaced)	Blue	None	1"	
3613470	Number 9 (die-cut prespaced)	Blue	None	1"	
3613471	Number 0 (die-cut prespaced)	Blue	None	1"	
3613472	BADGE SECURITY POLICE (reflectorized)	Blue	Silver		10½"x16"

PART NO.	LEGEND OR SYMBOL	COLORS LEGEND	COLORS BKGD.	LETTER SIZE	EMBLEM SIZE
3613017	WATER-ALCOHOL NATO SYMBOL S738 (2 lines of copy as shown)	Black	Silver	1/2"	2" x 9 1/2"
3613018	OPEN MANHOLE COVERS WHEN PUMPING FUEL OR OIL AT TEMPERATURES BELOW 25° F (4 lines of copy as shown)	Silver	Red	2"	10" x 36"
3613019	OIL ACFT ENG	Silver	Red	3"	4" x 36"
3613020	OIL ACFT ENG	Silver	Red	4"	5" x 48"
3613021	KEROSENE	Silver	Red	4"	5" x 30"
3613022	KEROSENE	Silver	Red	6"	7" x 48"
3613025	DIESEL FUEL	Silver	Red	3"	4" x 36"
3613026	DIESEL FUEL	Silver	Red	4"	5" x 42"
3613027	MOGAS	Silver	Red	3"	4" x 18"
3613028	MOGAS	Silver	Red	4"	5" x 24"
3613029	N_2O_4 CLASS A POISON (2 lines of copy as shown)	Blue	Silver	6"	14" x 72"
3613030	UDMH HYDRAZINE CORROSIVE LIQUID (2 lines of copy as shown)	Blue	Silver	6"	14" x 72"
3613031	DEMINERALIZED WATER	Silver	Red	6"	7" x 72"
3613032	WARNING: TRANSFER FROM LINE OR CONTAINER IDENTIFIED BY NAME OF ALCOHOL REQUIRED. REFER TO TECHNICAL ORDERS 2-1-14 AND 36A9-3-12-1 FOR WATER-ALCOHOL MIXING AND TESTING DATA. (5 lines of copy as shown)	Black	Silver	1/8"	2" x 5"
3613041	EXPLOSIVES A	Red	Silver	6"	8" x 60"
3613042	EXPLOSIVES B	Red	Silver	6"	8" x 60"
3613043	POISON	Blue	Silver	4"	6" x 30"
3613044	OXIDIZERS	Yellow	Black	4"	6" x 34"
3613045	V (Water-Alcohol Chevron)	Black	Silver	3/4"x5"x7"	6" x 8"

PART NO.	LEGEND OR SYMBOL	COLORS LEGEND	COLORS BKGD.	LETTER SIZE	EMBLEM SIZE
3613046	COMPRESSED GAS (2 lines of copy)	Green	Silver	4"	11" x 36"
3613047	CORROSIVES	Blue	Silver	4"	6" x 36"
3613048	RADIOACTIVE	Black	Yellow	4"	6" x 36"
3613049	DANGEROUS	Red	Silver	4"	6" x 36"
3613050	CARGO FIRE - AVOID WATER	Red	Silver	2"	4" x 36"
3613051	SECURITY POLICE (1 line of copy as shown)	Blue	Silver	2 1/2 "	4" X 24"
3613053	RED CROSS SYMBOL (Reflect premasked)	Red	White	3" x 3"	4" x 4"
3613054	RED CROSS SYMBOL (Reflect premasked)	Red	White	6" x 6"	8" x 8"
3613055	RED CROSS SYMBOL (Reflect premasked)	Red	White	8" x 8"	10 3/4" x 10 3/4"
3613056	RED CROSS SYMBOL (Reflect premasked)	Red	White	18" x 18"	24" x 24"
3613057	RED CROSS SYMBOL (Non-Reflect premasked)	Red	White	36" x 36"	48" x 48"
3613058	RED CROSS SYMBOL (Reflect premasked)	Red	White	36" x 36"	48" x 48"
3613060	FOR OFFICIAL USE ONLY	Silver	Red	3/4"	1 1/4" x 15"
3613061	U.S. AIR FORCE	Silver	Red	1 1/2"	3" x 21"
3613065	U.S. AIR FORCE (Die-cut prespaced)	Silver	None	1 1/2"	None
3613062	U.S. AIR FORCE (Die-cut)	Yellow	None	1 1/2"	None
3613063	ALERT FORCE	Blue	Yellow	2 1/2"	3 1/2" x 26"
3613066	FOR OFFICIAL USE ONLY (Die-cut prespaced)	Silver	None	3/4"	None
3613064	FOR OFFICIAL USE ONLY (Die-cut)	Yellow	None	3/4"	None
3613080	OXYGEN	Yellow	Black	3"	5" x 22"
3613067	LIQUID OXYGEN	Yellow	Black	4"	6" x 36"
3613081	NITROGEN	Green	Silver	3"	5" x 24"
3613068	LIQUID NITROGEN	Green	Silver	4"	6" x 40"
3613069	CAUTION	Silver	Red	4"	6" x 22"
3613082	FLAMMABLE GAS (2 lines of copy as shown)	Red	Silver	4"	11" x 36"
3613103	AMBULANCE (Reflective die-cut prespaced)	Silver	None	3"	None

NOTE: The following Manhole Cover Markings are available in 2" x 6" strips of 3 identical legends with symbols:

PART NO.	LEGEND WITH SYMBOL			
3613407	AVGAS	115/145	F-22 ◆	Silver Legend - Purple Background
3613408	AVGAS	100/130	F-18 ◆	Silver Legend - Purple Background
3613409	JP-4	F-40 ◆		Silver Legend - Red Background
3613410	JP-5	F-44 ◆		Silver Legend - Red Background
3613070	AVOIL	D-1100	0-128	Black Legend - Silver Background
3613071	AVOIL	D-1055	0-123	Black Legend - Silver Background
3613037	AVOIL	1100	0-117 ■	Black Legend - Silver Background
3613038	AVOIL	1065	0-113 ■	Black Legend - Silver Background
3613039	AVOIL	1010	0-133 ■	Black Legend - Silver Background
3613040	AVOIL	1005	0-132 ■	Black Legend - Silver Background

NOTE: The following are supplied in ten identical characters per package.

PART NO.	LEGEND OR SYMBOL	COLORS		LETTER OR NO. SIZE	EMBLEM SIZE
		LETTER OR NO.	BKGD.		
3613132	Letter A	Silver	Red	1 1/2"	2" x 1.4"
3613133	Letter B	Silver	Red	1 1/2"	2" x 1.4"
3613134	Letter C	Silver	Red	1 1/2"	2" x 1.4"
3613135	Letter D	Silver	Red	1 1/2"	2" x 1.4"
3613136	Letter E	Silver	Red	1 1/2"	2" x 1.4"
3613137	Letter F	Silver	Red	1 1/2"	2" x 1.4"
3613138	Letter G	Silver	Red	1 1/2"	2" x 1.4"
3613139	Letter H	Silver	Red	1 1/2"	2" x 1.4"
3613140	Letter I	Silver	Red	1 1/2"	2" x 0.812"
3613141	Letter J	Silver	Red	1 1/2"	2" x 1.2"
3613142	Letter K	Silver	Red	1 1/2"	2" x 1.4"
3613143	Letter L	Silver	Red	1 1/2"	2" x 1.2"
3613144	Letter M	Silver	Red	1 1/2"	2" x 1.625"
3613145	Letter N	Silver	Red	1 1/2"	2" x 1.4"
3613146	Letter O	Silver	Red	1 1/2"	2" x 1.4"
3613147	Letter P	Silver	Red	1 1/2"	2" x 1.4"
3613148	Letter Q	Silver	Red	1 1/2"	2" x 1.4"
3613149	Letter R	Silver	Red	1 1/2"	2" x 1.4"

PART NO.	LEGEND OR SYMBOL	COLORS		LETTER OR NO. SIZE	EMBLEM SIZE
		LETTER OR NO.	BKGD.		
3613150	Letter S	Silver	Red	1 1/2"	2" x 1.4"
3613151	Letter T	Silver	Red	1 1/2"	2" x 1.2"
3613152	Letter U	Silver	Red	1 1/2"	2" x 1.4"
3613153	Letter V	Silver	Red	1 1/2"	2" x 1.4"
3613154	Letter W	Silver	Red	1 1/2"	2" x 1.625"
3613155	Letter X	Silver	Red	1 1/2"	2" x 1.4"
3613156	Letter Y	Silver	Red	1 1/2"	2" x 1.4"
3613157	Letter Z	Silver	Red	1 1/2"	2" x 1.4"
3613158	Letter A (die-cut prespaced)	Yellow	None	1 1/2"	2" x 1.4"
3613159	Letter B (die-cut prespaced)	Yellow	None	1 1/2"	2" x 1.4"
3613160	Letter C (die-cut prespaced)	Yellow	None	1 1/2"	2" x 1.4"
3613161	Letter D (die-cut prespaced)	Yellow	None	1 1/2"	2" x 1.4"
3613162	Letter E (die-cut prespaced)	Yellow	None	1 1/2"	2" x 1.4"
3613163	Letter F (die-cut prespaced)	Yellow	None	1 1/2"	2" x 1.4"
3613164	Letter G (die-cut prespaced)	Yellow	None	1 1/2"	2" x 1.4"
3613165	Letter H (die-cut prespaced)	Yellow	None	1 1/2"	2" x 1.4"
3613166	Letter I (die-cut prespaced)	Yellow	None	1 1/2"	2" x 0.812"
3613167	Letter J (die-cut prespaced)	Yellow	None	1 1/2"	2" x 1.2"
3613168	Letter K (die-cut prespaced)	Yellow	None	1 1/2"	2" x 1.4"
3613169	Letter L (die-cut prespaced)	Yellow	None	1 1/2"	2" x 1.2"
3613170	Letter M (die-cut prespaced)	Yellow	None	1 1/2"	2" x 1.625"
3613171	Letter N (die-cut prespaced)	Yellow	None	1 1/2"	2" x 1.4"
3613172	Letter O (die-cut prespaced)	Yellow	None	1 1/2"	2" x 1.4"
3613173	Letter P (die-cut prespaced)	Yellow	None	1 1/2"	2" x 1.4"
3613174	Letter Q (die-cut prespaced)	Yellow	None	1 1/2"	2" x 1.4"
3613175	Letter R (die-cut prespaced)	Yellow	None	1 1/2"	2" x 1.4"
3613176	Letter S (die-cut prespaced)	Yellow	None	1 1/2"	2" x 1.4"
3613177	Letter T (die-cut prespaced)	Yellow	None	1 1/2"	2" x 1.2"
3613178	Letter U (die-cut prespaced)	Yellow	None	1 1/2"	2" x 1.4"
3613179	Letter V (die-cut prespaced)	Yellow	None	1 1/2"	2" x 1.4"
3613180	Letter W (die-cut prespaced)	Yellow	None	1 1/2"	2" x 1.625"

PART NO.	LEGEND OR SYMBOL	COLORS LETTER OR NO.	COLORS BKGD.	LETTER OR NO. SIZE	EMBLEM SIZE
3613181	Letter X (die-cut prespaced)	Yellow	None	1 1/2"	2" x 1.4"
3613182	Letter Y (die-cut prespaced)	Yellow	None	1 1/2"	2" x 1.4"
3613183	Letter Z (die-cut prespaced)	Yellow	None	1 1/2"	2" x 1.4"
3613184	Letter A (die-cut prespaced)	Silver	None	1 1/2"	2" x 1.4"
3613185	Letter B (die-cut prespaced)	Silver	None	1 1/2"	2" x 1.4"
3613186	Letter C (die-cut prespaced)	Silver	None	1 1/2"	2" x 1.4"
3613187	Letter D (die-cut prespaced)	Silver	None	1 1/2"	2" x 1.4"
3613188	Letter E (die-cut prespaced	Silver	None	1 1/2"	2" x 1.4"
3613189	Letter F (die-cut prespaced)	Silver	None	1 1/2"	2" x 1.4"
3613190	Letter G (die-cut prespaced)	Silver	None	1 1/2"	2" x 1.4"
3613191	Letter H (die-cut prespaced)	Silver	None	1 1/2"	2" x 1.4"
3613192	Letter I (die-cut prespaced)	Silver	None	1 1/2"	2" x 0.812"
3613193	Letter J (die-cut prespaced)	Silver	None	1 1/2"	2" x 1.2"
3613194	Letter K (die-cut prespaced)	Silver	None	1 1/2"	2" x 1.4"
3613195	Letter L (die-cut prespaced)	Silver	None	1 1/2"	2" x 1.2"
3613196	Letter M (die-cut prespaced)	Silver	None	1 1/2"	2" x 1.625"
3613197	Letter N (die-cut prespaced)	Silver	None	1 1/2"	2" x 1.4"
3613198	Letter O (die-cut prespaced)	Silver	None	1 1/2"	2" x 1.4"
3613199	Letter P (die-cut prespaced)	Silver	None	1 1/2"	2" x 1.4"
3613200	Letter Q (die-cut prespaced)	Silver	None	1 1/2"	2" x 1.4"
3613201	Letter R (die-cut prespaced)	Silver	None	1 1/2"	2" x 1.4"
3613202	Letter S (die-cut prespaced)	Silver	None	1 1/2"	2" x 1.4"
3613203	Letter T (die-cut prespaced)	Silver	None	1 1/2"	2" x 1.2"
3613204	Letter U (die-cut prespaced)	Silver	None	1 1/2"	2" x 1.4"
3613205	Letter V (die-cut prespaced)	Silver	None	1 1/2"	2" x 1.4"
3613206	Letter W (die-cut prespaced)	Silver	None	1 1/2"	2" x 1.625"
3613207	Letter X (die-cut prespaced)	Silver	None	1 1/2"	2" x 1.4"
3613208	Letter Y (die-cut prespaced)	Silver	None	1 1/2"	2" x 1.4"
3613209	Letter Z (die-cut prespaced)	Silver	None	1 1/2"	2" x 1.4"

PART NO.	LEGEND OR SYMBOL	COLORS LETTER OR NO.	COLORS BKGD.	LETTER OR NO. SIZE	EMBLEM SIZE
3613210	Letter A	Silver	Red	3"	4" x 2.8"
3613211	Letter B	Silver	Red	3"	4" x 2.8"
3613212	Letter C	Silver	Red	3"	4" x 2.8"
3613213	Letter D	Silver	Red	3"	4" x 2.8"
3613214	Letter E	Silver	Red	3"	4" x 2.8"
3613215	Letter F	Silver	Red	3"	4" x 2.8"
3613216	Letter G	Silver	Red	3"	4" x 2.8"
3613217	Letter H	Silver	Red	3"	4" x 2.8"
3613218	Letter I	Silver	Red	3"	4" x 1.625"
3613219	Letter J	Silver	Red	3"	4" x 2.4"
3613220	Letter K	Silver	Red	3"	4" x 2.8"
3613221	Letter L	Silver	Red	3"	4" x 2.4"
3613222	Letter M	Silver	Red	3"	4" x 3.25"
3613223	Letter N	Silver	Red	3"	4" x 2.8"
3613224	Letter O	Silver	Red	3"	4" x 2.8"
3613225	Letter P	Silver	Red	3"	4" x 2.8"
3613226	Letter Q	Silver	Red	3"	4" x 2.8"
3613227	Letter R	Silver	Red	3"	4" x 2.8"
3613228	Letter S	Silver	Red	3"	4" x 2.8"
3613229	Letter T	Silver	Red	3"	4" x 2.4"
3613230	Letter U	Silver	Red	3"	4" x 2.8"
3613231	Letter V	Silver	Red	3"	4" x 2.8"
3613232	Letter W	Silver	Red	3"	4" x 3.25"
3613233	Letter X	Silver	Red	3"	4" x 2.8"
3613234	Letter Y	Silver	Red	3"	4" x 2.8"
3613235	Letter Z	Silver	Red	3"	4" x 2.8"
3613236	Letter A	Silver	Red	4"	6" x 3.3"
3613237	Letter B	Silver	Red	4"	6" x 3.3"
3613238	Letter C	Silver	Red	4"	6" x 3.3"
3613239	Letter D	Silver	Red	4"	6" x 3.3"
3613240	Letter E	Silver	Red	4"	6" x 3.3"
3613241	Letter F	Silver	Red	4"	6" x 3.3"
3613242	Letter G	Silver	Red	4"	6" x 3.3"
3613243	Letter H	Silver	Red	4"	6" x 3.3"
3613244	Letter I	Silver	Red	4"	6" x 2"
3613245	Letter J	Silver	Red	4"	6" x 3"
3613246	Letter K	Silver	Red	4"	6" x 3.3"
3613247	Letter L	Silver	Red	4"	6" x 3"
3613248	Letter M	Silver	Red	4"	6" x 4.05"
3613249	Letter N	Silver	Red	4"	6" x 3"
3613250	Letter O	Silver	Red	4"	6" x 3.3"
3613251	Letter P	Silver	Red	4"	6" x 3.3"
3613252	Letter Q	Silver	Red	4"	6" x 3.3"
3613253	Letter R	Silver	Red	4"	6" x 3.3"
3613254	Letter S	Silver	Red	4"	6" x 3.3"
3613255	Letter T	Silver	Red	4"	6" x 3"
3613256	Letter U	Silver	Red	4"	6" x 3.3"
3613257	Letter V	Silver	Red	4"	6" x 3.3"
3613258	Letter W	Silver	Red	4"	6" x 4.05"
3613259	Letter X	Silver	Red	4"	6" x 3.3"
3613260	Letter Y	Silver	Red	4"	6" x 3.3"
3613261	Letter Z	Silver	Red	4"	6" x 3.3"
3613262	Letter A	Silver	Red	6"	8" x 5.6"
3613263	Letter B	Silver	Red	6"	8" x 5.6"
3613264	Letter C	Silver	Red	6"	8" x 5.6"
3613265	Letter D	Silver	Red	6"	8" x 5.6"
3613266	Letter E	Silver	Red	6"	8" x 5.6"
3613267	Letter F	Silver	Red	6"	8" x 5.6"
3613268	Letter G	Silver	Red	6"	8" x 5.6"
3613269	Letter H	Silver	Red	6"	8" x 5.6"

PART NO.	LEGEND OR SYMBOL	COLORS LETTER OR NO.	COLORS BKGD.	LETTER OR NO. SIZE	EMBLEM SIZE
3613270	Letter I	Silver	Red	6"	8" x 3.25"
3613271	Letter J	Silver	Red	6"	8" x 4.8"
3613272	Letter K	Silver	Red	6"	8" x 5.6"
3613273	Letter L	Silver	Red	6"	8" x 4.8"
3613274	Letter M	Silver	Red	6"	8" x 6.50"
3613275	Letter N	Silver	Red	6"	8" x 5.6"
3613276	Letter O	Silver	Red	6"	8" x 5.6"
3613277	Letter P	Silver	Red	6"	8" x 5.6"
3613278	Letter Q	Silver	Red	6"	8" x 5.6"
3613279	Letter R	Silver	Red	6"	8" x 5.6"
3613280	Letter S	Silver	Red	6"	8" x 5.6"
3613281	Letter T	Silver	Red	6"	8" x 4.8"
3613282	Letter U	Silver	Red	6"	8" x 5.6"
3613283	Letter V	Silver	Red	6"	8" x 5.6"
3613284	Letter W	Silver	Red	6"	8" x 6.50"
3613285	Letter X	Silver	Red	6"	8" x 5.6"
3613286	Letter Y	Silver	Red	6"	8" x 5.6"
3613287	Letter Z	Silver	Red	6"	8" x 5.6"
3613330	Number 1 (die-cut prespaced)	Silver	None	1 1/2"	2" x 1"
3613331	Number 2 (die-cut prespaced)	Silver	None	1 1/2"	2" x 1.3"
3613332	Number 3 (die-cut prespaced)	Silver	None	1 1/2"	2" x 1.3"
3613333	Number 4 (die-cut prespaced)	Silver	None	1 1/2"	2" x 1.3"
3613334	Number 5 (die-cut prespaced)	Silver	None	1 1/2"	2" x 1.3"
3613335	Number 6 (die-cut prespaced)	Silver	None	1 1/2"	2" x 1.3"
3613336	Number 7 (die-cut prespaced)	Silver	None	1 1/2"	2" x 1.3"
3613337	Number 8 (die-cut prespaced)	Silver	None	1 1/2"	2" x 1.3"
3613338	Number 9 (die-cut prespaced)	Silver	None	1 1/2"	2" x 1.3"
3613339	Number 0 (die-cut prespaced)	Silver	None	1 1/2"	2" x 1.3"
3613340	Number 1 (die-cut prespaced)	Yellow	None	1 1/2"	2" x 1"
3613341	Number 2 (die-cut prespaced)	Yellow	None	1 1/2"	2" x 1.3"
3613342	Number 3 (die-cut prespaced)	Yellow	None	1 1/2"	2" x 1.3"
3613343	Number 4 (die-cut prespaced)	Yellow	None	1 1/2"	2" x 1.3"
3613344	Number 5 (die-cut prespaced)	Yellow	None	1 1/2"	2" x 1.3"
3613345	Number 6 (die-cut prespaced)	Yellow	None	1 1/2"	2" x 1.3"
3613346	Number 7 (die-cut prespaced)	Yellow	None	1 1/2"	2" x 1.3"
3613347	Number 8 (die-cut prespaced)	Yellow	None	1 1/2"	2" x 1.3"
3613348	Number 9 (die-cut prespaced)	Yellow	None	1 1/2"	2" x 1.3"
3613349	Number 0 (die-cut prespaced)	Yellow	None	1 1/2"	2" x 1.3"

PART NO.	LEGEND OR SYMBOL	COLORS LETTER OR NO.	COLORS BKGD.	LETTER OR NO. SIZE	EMBLEM SIZE
3613350	Number 1	Silver	Red	1 1/2"	2" x 1"
3613351	Number 2	Silver	Red	1 1/2"	2" x 1.3"
3613352	Number 3	Silver	Red	1 1/2"	2" x 1.3"
3613353	Number 4	Silver	Red	1 1/2"	2" x 1.3"
3613354	Number 5	Silver	Red	1 1/2"	2" x 1.3"
3613355	Number 6	Silver	Red	1 1/2"	2" x 1.3"
3613356	Number 7	Silver	Red	1 1/2"	2" x 1.3"
3613357	Number 8	Silver	Red	1 1/2"	2" x 1.3"
3613358	Number 9	Silver	Red	1 1/2"	2" x 1.3"
3613359	Number 0	Silver	Red	1 1/2"	2" x 1.3"
3613360	Number 1	Silver	Red	3"	4" x 2"
3613361	Number 2	Silver	Red	3"	4" x 2.6"
3613362	Number 3	Silver	Red	3"	4" x 2.6"
3613363	Number 4	Silver	Red	3"	4" x 2.6"
3613364	Number 5	Silver	Red	3"	4" x 2.6"
3613365	Number 6	Silver	Red	3"	4" x 2.6"
3613366	Number 7	Silver	Red	3"	4" x 2.6"
3613367	Number 8	Silver	Red	3"	4" x 2.6"
3613368	Number 9	Silver	Red	3"	4" x 2.6"
3613369	Number 0	Silver	Red	3"	4" x 2.6"
3613370	Number 1	Silver	Red	4"	6" x 2"
3613371	Number 2	Silver	Red	4"	6" x 3.3"
3613372	Number 3	Silver	Red	4"	6" x 3.3"
3613373	Number 4	Silver	Red	4"	6" x 3.3"
3613374	Number 5	Silver	Red	4"	6" x 3.3"
3613375	Number 6	Silver	Red	4"	6" x 3.3"
3613376	Number 7	Silver	Red	4"	6" x 3.3"
3613377	Number 8	Silver	Red	4"	6" x 3.3"
3613378	Number 9	Silver	Red	4"	6" x 3.3"
3613379	Number 0	Silver	Red	4"	6" x 3.3"
3613380	Number 1	Silver	Red	6"	8" x 4"
3613381	Number 2	Silver	Red	6"	8" x 5.2"
3613382	Number 3	Silver	Red	6"	8" x 5.2"
3613383	Number 4	Silver	Red	6"	8" x 5.2"
3613384	Number 5	Silver	Red	6"	8" x 5.2"
3613385	Number 6	Silver	Red	6"	8" x 5.2"
3613386	Number 7	Silver	Red	6"	8" x 5.2"
3613387	Number 8	Silver	Red	6"	8" x 5.2"
3613388	Number 9	Silver	Red	6"	8" x 5.2"
3613389	Number 0	Silver	Red	6"	8" x 5.2"
3613393	100-130	Silver	Purple	4"	5"x 30"
3613394	100-130	Silver	Purple	6"	7"x 42"
3613395	115-145	Silver	Purple	4"	5"x 30"
3613396	115-145	Silver	Purple	6"	7"x 42"
3613397	AVGAS	Silver	Purple	4"	5"x 24"
3613398	AVGAS	Silver	Purple	6"	7"x 32"
3613399	F	Silver	Purple	4"	6"x 3.3"
3613400	F	Silver	Purple	6"	8"x 5.6"
3613401	2	Silver	Purple	4"	6"x 3.3"
3613402	2	Silver	Purple	6"	8"x 5.2"
3613403	1	Silver	Purple	4"	6"x 2"
3613404	1	Silver	Purple	6"	8"x 4"
3613405	8	Silver	Purple	4"	6"x 3.3
3613406	8	Silver	Purple	6"	8"x 5.2"

c. The following decals are required for compliance with this technical order. Requisition decals from WR-ALC, using part numbers and complete descriptions that follow.

PART NO.	LEGEND OR DESCRIPTION	EMBLEM SIZE
3613101	Airdrome Traffic Signals	2 3/4" x 3"
3613102	MPH to KPH	2" x 3"
3613500	CAUTION BEFORE TOWING LATCH PINTLE CLOSE TRIPLOCK INSTALL LOCK PIN	3 1/2" x 4 1/2"
3613502	WARNING DO NOT EXCEED 100 PSI IN HALON SUPPLY CYLINDER DURING TRANSFER OPERATION. OVER PRESSURIZATION OF SUPPLY CYLINDER MAY CAUSE FAILURE OF TANK RESULTING IN INJURY OR DEATH.	5 1/2" X 3 1/2"
3613505	Air Force A Great Way of Life	7'6" X 6"
3613506 (toned down)	CAUTION BEFORE TOWING LATCH PINTEL CLOSE TRIPLOCK INSTALL LOCK PIN	3½" x 4½"

U.S. GOVERNMENT PRINTING OFFICE :1982--546-012/6706 Region #4

SECTION VI

LIGHTING REQUIREMENTS

6-1. GENERAL.

6-2. The lighting and signaling devices prescribed in this technical order provides the minimum electrical directional signaling devices, and reflector requirements for vehicles.

6-3. REQUIREMENTS.

a. All electrical devices shall conform to State and Federal Highway Administration Motor Carrier Safety Regulations. When local, state or foreign country regulations conflict with this technical order, those pertinent regulations prevailing will take precedence. These requirements apply to vehicles operated on and off base.

b. Deleted.

c. All off base operated vehicles included in AFM 77-1 will be equipped with the electrical directional signaling, lighting, and reflector devices prescribed by this technical order.

d. The following legends represent the lights, reflectors, and markers which may be required on all types of vehicular equipment (see figure 6-1):

(1) A - Head Lamp

(2) B - Red Tail Light

(3) C - Red or Amber Stop Light

(4) D - Red Clearance Lamp

(5) E - Amber Clearance Light

(6) F - Red Side Marker

(7) G - Amber Side Marker

(8) H - Red Reflector

(9) I - Amber Reflector

NOTE

Double letters indicate both sides.

e. Lighting and reflector equipment over and above that indicated in the preceding paragraph may be installed to meet local conditions and state regulations.

NOTE

Head lamp units incorporating left way shift characteristics shall be installed on vehicles to satisfy local condition requirements in areas where a left hand traffic pattern prevails.

6-4. SPECIAL DATA.

a. DIRECTIONAL SIGNALING DEVICES - Electrical directional signaling devices should be mounted on the front and rear of the vehicle, or combination of vehicles, near the extreme and outermost corners. They should be mounted not less than 24 inches and not more than 60 inches above ground level. Color of devices will be yellow or amber on the front and red on the rear. Location and color of directional signaling devices which have been factory installed on new vehicles will not be changed to comply with this technical order; however, in all cases, local state regulations will be adhered to.

b. REFLECTORS - All reflectors indicated in figure 6-1 will be in accordance with Ordnance drawing number B161059. Reflector installation on vehicles will not exceed a height of 60 inches and should be not less than 24 inches above the ground on which the vehicle stands. On vehicles which are so constructed as to make compliance with the 24 inch requirement impractical, lower mountings may be used.

NOTE

All devices should be illuminated and should be visible, both day and night, at a distance of 100 feet.

c. TRAILER LIGHTING CABLES.

(1) Air Force trucks, truck-tractors, trailers, and semitrailers are presently equipped with four different types of trailer lighting cables and connectors. The earliest truck-tractor to semitrailer jumper cables employed a Warner 4- conductor cable, plugs and sockets. With the advent of directional signaling devices, many of the old vehicles and all newer ones were equipped with the Warner 6- conductor cables, plugs and sockets. Then on 1 July 1957 the Society of Automotive Engineers, in conjunction with the American Trucking Association, established a recommended standard seven conductor cable with connectors. In an effort to standardize these connectors the Air Force has taken action to incorporate in all specifications for new truck tractors and semitrailers a requirement for the standard -7 conductor components. This will result in considerable savings to the Air Force, in that components such as the cable wire, plugs, and sockets can be replaced as separate items.

(2) Lighting connectors are not being furnished with vehicles of the 1/2 to 1-1/2 ton capacity. Since comparatively few of these vehicles ever tow trailers off base, or trailers which require lights, it is not considered to be economically feasible. Installation of lighting connectors on these vehicles must be accomplished by the using activity.

(3) Upon receipt of new vehicles with the seven conductor cables and connectors, action should be taken to convert your trailers and semitrailers. Under no circumstances should anything other than the standard SAE ATA seven conductor components be used. To accomplish this, the ROUND plugs and sockets have been selected for standardization purposes. Although it may be desirable to remove the presently utilized 4 or 6 conductor components, it will not be necessary. The new parts may be installed and hooked up to the necessary lead wires just before they enter the present connectors.

(4) The new SAE-ATA seven circuit cables, plugs and sockets are coded by either numbers or colors. The SAE-ATA wiring code, which follows, should be utilized when installing the new components:

CONDUCTOR NO.	WIRE COLOR	CIRCUIT
1	White	Ground
2	Black	Clearance Lights
3	Yellow	Left Turn Light
4	Red	Stop Lights
5	Green	Right Turn Light
6	Brown	Tail Light
7	Blue	Auxiliary Circuit

Since many semitrailers are equipped with compartment lights, spot lights, etc., the number 7 or blue auxiliary circuit should be used for this purpose.

d. SPOT LIGHTS. If deemed necessary by operating officials, spot lights can be installed on vehicles when required to meet local operational conditions or to comply with existing regulatory requirements. When installed it must be mounted on the vehicle centerline directly over the windshield head section with an inside control readily accessible to the driver.

6-5. SUPPLY DATA.

a. When a requirement exists for electrical directional signaling devices, spot lights, or trailer lighting connectors, all material may be purchased locally in accordance with AFR 67-3. When procuring trailer lighting components, only the ROUND seven conductor plugs and sockets should be utilized.

b. Parts necessary for fulfilling lighting and reflector requirements for off base operation not available in local supply will be requisitioned through regular supply channels, since requirements are based on local conditions and available types of vehicles cannot be predetermined.

6-6. WARNING OR INDICATING LIGHTS.

a. Emergency Vehicles (i.e., fire trucks, flight safety, and base disaster mobile command post vehicles) shall utilize the revolving flasher type light of aviation red as specified in MIL-C-25050.

b. The color of the revolving light used on Security Police Vehicles will conform with the color specified for police vehicles in the traffic code of the state in which the installation is located. The revolving flasher light utilized will conform to MIL-C-25050.

c. Metropolitan and van type ambulances shall utilize a revolving flasher light with a clear lens incorporating 4 bulbs with alternating lens colors, two red and two white. Station wagon and field type ambulances designated for general ambulance service will continue to use the red revolving flasher light conforming to MIL-C-25050. Those station wagon and field ambulances designated as "EMERGENCY USE" may be equipped with the same type 4-way revolving flasher light as authorized for van type and metropolitan ambulances.

d. Other vehicles which are authorized to operate on the apron, taxiways, and runways (i.e., maintenance vehicles, and alert/reflex trucks) will be equipped with the hazard warning lights (four way flashers) as required by the Department of Transportation or a nonrevolving pulsating type light of aviation yellow as specified in MIL-C-25050. The pulsating yellow light is not required on those vehicles that are equipped with the four way flashing hazard warning lights.

e. General purpose vehicles which rarely operate on the apron and taxiway areas at night (i.e., staff cars, buses, and station wagons) may be equipped with aviation yellow magnetic based caution lights at the discretion of the local commander.

f. Snowplows and Emergency Arresting Barrier Vehicles shall utilize the revolving flasher type light with amber/yellow globe conforming to MIL-C-25050. Light must be capable of emitting no less than 40 nor more than 400 candle power. Rotation will be such as to emit at least 90 flashes per minute and be visible through a 360-degree radius.

g. Lighting equipment over and above that indicated in the preceding paragraphs may be installed to meet local conditions and state/local regulations.

NOTE

Warning lights will not be permanently affixed to Security Police, alert/reflex, fire chief, EOD vehicles, etc., referenced in paragraph 6-6.a., b., d., and e. above. Detachable mounting brackets will be utilized to facilitate vehicle rotation.

All requirements for nonrevolving pulsating yellow lights should be filled, when possible, by removing the nonrevolving pulsating light from vehicles which have both the nonrevolving pulsating light and the hazard warning lights.

Red revolving flasher lights presently installed on metropolitan ambulances will not be replaced solely to comply with this TO. The lights on these ambulances will be replaced on an as required basis.

All other functional and safety markings for above vehicles will be accomplished as required in Section III of this technical order.

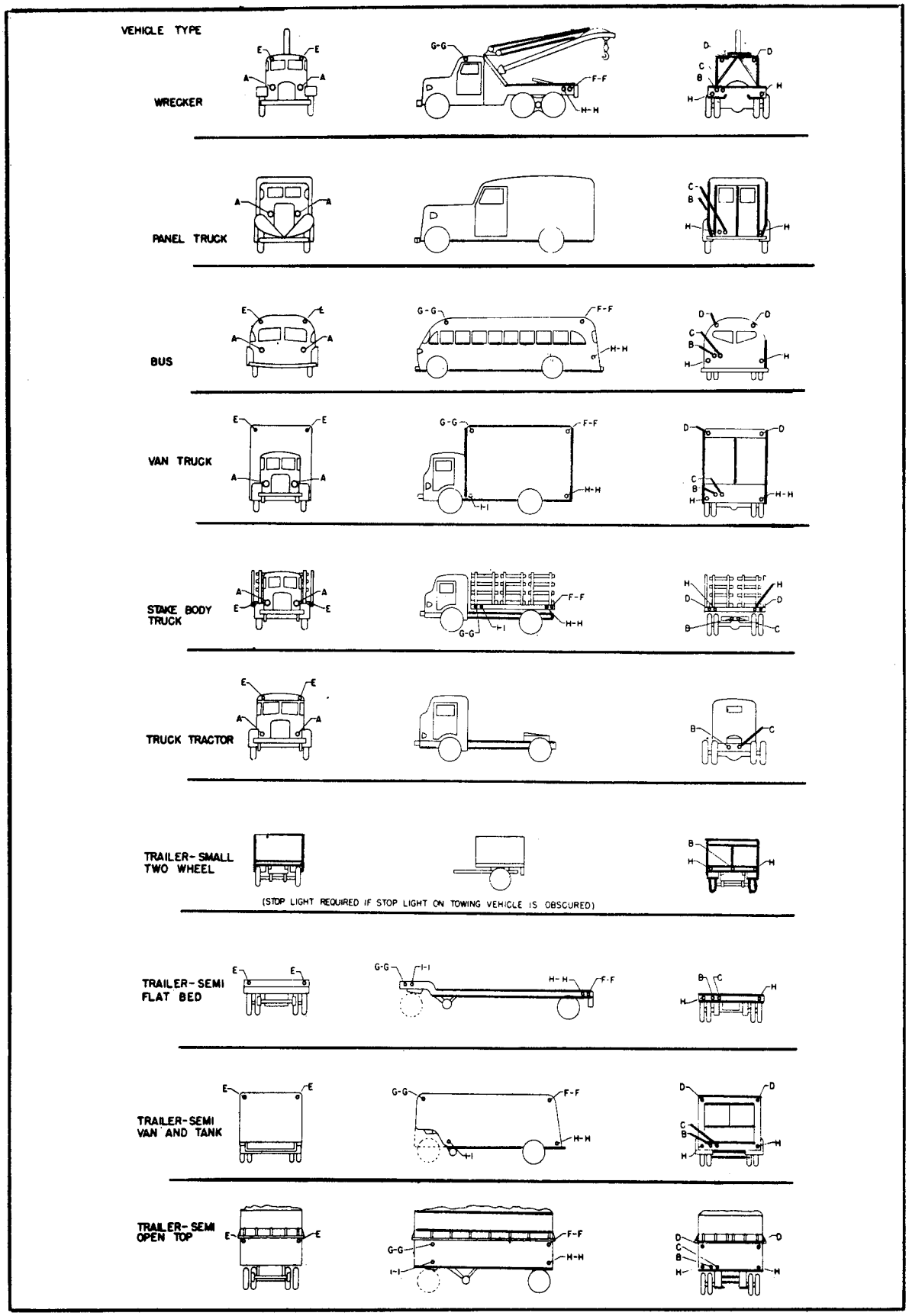

Figure 6-1. Types of Vehicles

* U.S. GOVERNMENT PRINTING OFFICE: 1979--J640-008/3367