FMS SERIES

T.O. 1F-5E(II)-34-1-1

F-5E/F
(CONFIGURATION II)

AIRCRAFT

F33657-70-C-0717/F33657-75-C-0001
F33657-75-C-0199

SUPPLEMENTAL
AIRCREW NONNUCLEAR WEAPONS DELIVERY MANUAL

REFERENCE FILE COPY
Can be checked out for max. 3 days
For Reference Purpose Only

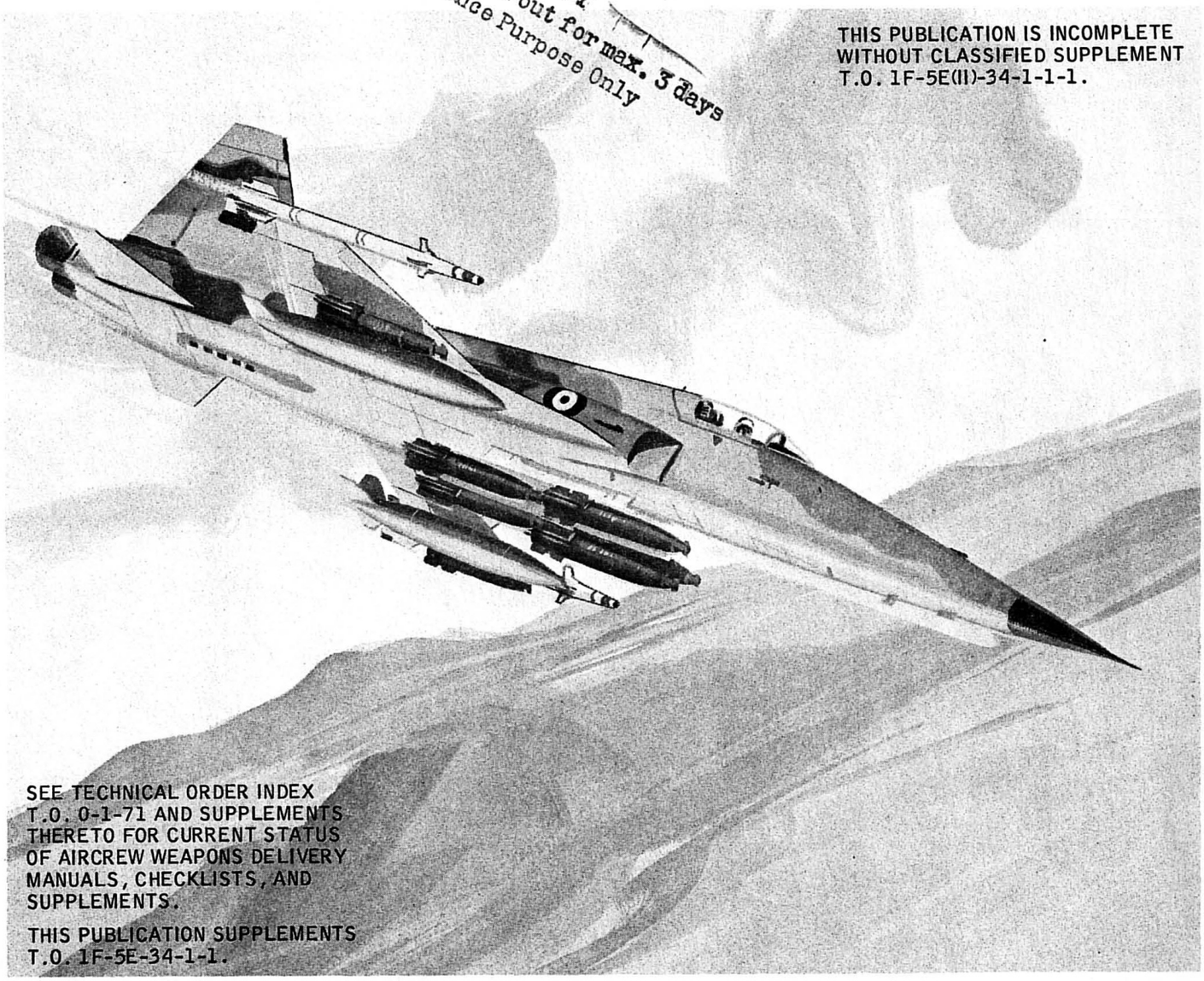

THIS PUBLICATION IS INCOMPLETE WITHOUT CLASSIFIED SUPPLEMENT T.O. 1F-5E(II)-34-1-1-1.

SEE TECHNICAL ORDER INDEX T.O. 0-1-71 AND SUPPLEMENTS THERETO FOR CURRENT STATUS OF AIRCREW WEAPONS DELIVERY MANUALS, CHECKLISTS, AND SUPPLEMENTS.

THIS PUBLICATION SUPPLEMENTS T.O. 1F-5E-34-1-1.

COMMANDERS ARE RESPONSIBLE FOR BRINGING THIS PUBLICATION TO THE ATTENTION OF ALL AFFECTED PERSONNEL.

F-5 34-1(5)C

1 OCTOBER 1976

CHANGE 2 — 1 JUNE 1977

AIR FORCE 08752 26-10-77--450

Reproduction for nonmilitary use of the information or illustrations contained in this publication is not permitted. The policy for military use reproduction is established for the Army in AR 380-5, for the Navy and Marine Corps in OPNAVINST 5510.1B, and for the Air Force in Air Force Regulation 205-1.

LIST OF EFFECTIVE PAGES

Insert latest changed pages; dispose of superseded pages in accordance with applicable regulations.

NOTE: On a changed page, the portion of the text affected by the latest change is indicated by a vertical line, or other change symbol, in the outer margin of the page. Changes to illustrations are indicated by miniature pointing hands.

Total number of pages in this manual is 62, consisting of the following:

Page No.	# Change No.
Title	2
A	2
Status page	2
Blank	2
i	0
ii Blank	0
iii – iv	1
1-1	1
1-2	2
1-3	0
1-4 – 1-6	2
1-7	1
1-8	2
1-9	0
1-10	2
2-1 – 2-3	2
2-4 Blank	2
3-1 – 3-2	0
4-1/5-1	0
5-2 Blank	0
6-1 – 6-33	0
6-34 Blank	0
Index 1	2
Index 2 Blank	2

CURRENT PILOT'S (NONNUCLEAR) WEAPONS DELIVERY CHECKLIST

T. O. 1F-5E(II)-34-1-1CL-1

1 OCTOBER 1976

CHANGE 1 – 1 FEBRUARY 1977

Zero in this column indicates an original page.

AIRCREW WEAPONS DELIVERY MANUAL AND SUPPLEMENT STATUS

This page is published with each Safety Supplement, Operational Supplement, and Aircrew Weapons Delivery Manual revision or change. It provides a comprehensive listing of the current Aircrew Weapon Delivery Manual, Aircrew Weapons Delivery Checklist, Safety Supplements, and Operational Supplements. The supplements you receive should follow in sequence. If you are missing any publications listed on this page, see your Publications Distribution Officer and get your copy. Periodically check Numerical Index, T.O. 0-1-71, and supplements thereto to make sure you have the latest supplements, checklist, and basic manual.

This supplement status page will be replaced by the supplement status page received with the latest formal safety or operational supplement.

Current Aircrew Nonnuclear Weapon Delivery Manual and Supplement	Date	Change
T.O. 1F-5E(II)-34-1-1	1 Oct 76	2 - 1 Jun 77
T.O. 1F-5E(II)-34-1-1-1 (Confidential)	1 Oct 76	1 - 1 Feb 77

Current Aircrew Nonnuclear Weapon Delivery Checklist	Date	Change
T.O. 1F-5E(II)-34-1-1CL-1	1 Oct 76	1 - 1 Feb 77

SAFETY SUPPLEMENTS INCORPORATED IN THIS ISSUE

Number	Date	Short Title	Manual Sections Affected
None			

OUTSTANDING SAFETY SUPPLEMENTS

None

PREVIOUSLY INCORPORATED, RESCINDED, OR REPLACED SAFETY SUPPLEMENTS

None

OPERATIONAL SUPPLEMENTS INCORPORATED IN THIS ISSUE

Number	Date	Short Title	Manual Sections Affected
None			

OUTSTANDING OPERATIONAL SUPPLEMENTS

None

PREVIOUSLY INCORPORATED, RESCINDED, OR REPLACED OPERATIONAL SUPPLEMENTS

None

TABLE OF CONTENTS

			PAGE
SECTION	I	DESCRIPTION	1-1
SECTION	II	NORMAL PROCEDURES	2-1
SECTION	III	EMERGENCY PROCEDURES	3-1
SECTION	IV	SUPPLEMENTARY DATA	*
SECTION	V	PLANNING PROCEDURES AND SAMPLE PROBLEMS	*
SECTION	VI	PLANNING CHARTS AND TABLES	6-1
INDEX		ALPHABETICAL	INDEX 1

* REFER TO T.O. 1F-5E-34-1-1

FOREWORD

PURPOSE

This manual supplements T.O. 1F-5E-34-1-1 to provide physical and functional descriptions and procedures for planning and executing missions with the following munitions and associated equipment:

Multiple Ejector Rack MER-5E, loaded with 5 MK-82 LD or 5 MK-82 Snakeye I bombs, and GBU-12/B and -12A/B laser guided bomb.

This manual must be used in conjunction with T.O. 1F-5E-34-1-1 to cover other stores authorized to be used on F-5E and F-5F aircraft. For additional information on the GBU-12/B, -12A/B laser guided bomb, refer to confidential supplement T.O. 1F-5E(II)-34-1-1-1.

AIRCRAFT EFFECTIVITIES

The supplement is applicable to the following Air Force serial-numbered F-5E and F-5F (Configuration II) aircraft:

F-5E
AF73-0933 thru AF73-0990
AF74-1362 thru AF74-1444

F-5F
AF75-0681 thru AF75-0708

TIME COMPLIANCE TECHNICAL ORDERS

The following TCTOs and ECPs are applicable to this manual. Reference to T.O. number within brackets [ ] in the text of this manual requires referral to this list. TCTOs not yet released, or those known to be completed, are not included. For a complete list of TCTOs affecting F-5E and F-5F aircraft, refer to Fighter Aircraft Numerical Index, T.O. 0-1-71, and supplements thereto.

T.O. NUMBER	TITLE	PRODUCTION EFFECTIVITY	RETROFIT EFFECTIVITY

SECTION I

DESCRIPTION

F-5E 34-3

TABLE OF CONTENTS

	Page
Mission Description	1-1
Weapon System and Controls	1-1
Weapon Suspension Systems	1-3
Nonnuclear Weapons	1-6
Nonnuclear Weapon Fuzes	1-9

MISSION DESCRIPTION

GENERAL PURPOSE BOMB DELIVERY ON MER-5E

Level and dive delivery of MK-82 LD and MK-82 Snakeye I on the MER-5E is accomplished in the same manner as for general purpose bombs on the pylons. Refer to section VI for ballistics and weapon delivery data for MK-82 LD and MK-82 Snakeye I bombs on the MER-5E.

LASER-GUIDED BOMB DELIVERY

The laser-guided bomb (LGB) is delivered in much the same manner as conventional unguided bombs are used in support of air operations, including air superiority, interdiction, and close air support missions. Targets illuminated by a laser are attacked with this system. The bomb guidance system sensing the laser energy, derives azimuth and elevation steering commands for the movable guidance fins to provide steering to the illuminated target.

Mission planning data consisting of ballistic and envelope/profile data are presented in T.O. 1F-5E(II)-34-1-1-1 (Confidential) for the GBU-12/B and GBU-12A/B LGB. The mission may therefore be conducted against targets of opportunity or against preplanned targets of known location. The ballistic tables assume that the weapon flies an unguided (ballistic) path toward the target. Thus, the weapon guidance system must accomplish only final course corrections. By this procedure, the weapon should impact close to the target if the guidance system malfunctions. Guidance system acquisition of the target prior to release is unnecessary. The weapon flies ballistically until the illuminated target is within the detector field of view and until the reflected energy is strong enough to activate the guidance system.

WEAPON SYSTEM AND CONTROLS

LOADING CAPABILITIES & STATION REQUIREMENTS

The additional loading capabilities of the pylons are shown in figure 1-1.

LOADING CAPABILITIES & STATION REQUIREMENTS

Note

- F-5E HAS TWO M-39 20MM GUNS IN NOSE WITH 280 ROUNDS PER GUN.
- F-5F HAS ONE M-39 20MM GUN IN NOSE WITH 140 ROUNDS.

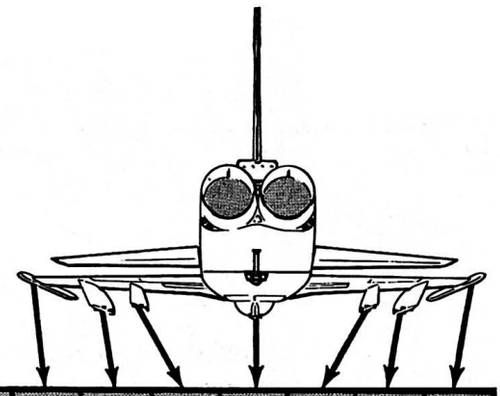

STORES	STATION REQUIREMENTS	TIP	LO	LI	CL	RI	RO	TIP
MK-82 LD BOMB (5)	MER-5E				●			
MK-82 SNAKEYE I (5)	MER-5E				●			
GBU-12/B,A/B LASER GUIDED BOMB			●	●		●	●	

F-5 34-25(3)

Figure 1-1.

WEAPON RELEASE SYSTEM

NORMAL RELEASE

The arming and single or ripple release of MK-82 LD and MK-82 Snakeye I bombs from the MER is accomplished by use of the normal release controls in cockpit and the position of the release mode switch on the MER.

External Stores Selector, BOMB

With MER release mode switch at BOMBS, one bomb releases each time bomb-rocket button is pressed. With MER release mode switch at SNAKEYE RIPPLE (used when MK-82 Snakeye I bombs are loaded), bomb ripple release interval is controlled by MER timer at an interval of 275 milliseconds when bomb-rocket button is pressed.

External Stores Selector, RIPL

With MER release mode switch at BOMBS, bombs are ripple released at interval selected by interval switch on armament panel in cockpit when the bomb-rocket button is pressed. When carrying bombs on all wing pylons and the MER, bomb ripple release sequence is left outboard, right outboard, ripple release from MER, left inboard, and right inboard. The release interval is not affected by intervening empty or nonselected pylon stations.

WARNING

With MK-82 Snakeye I bombs on MER, do not position external stores selector at RIPL when CL armament position selector switch is up. Bombs may collide because of release interval.

WEAPON SUSPENSION SYSTEM

BOMB RACKS (ORIFICE PINS)

The orifice pins required for the pylon carrying the MER-5E, GBU-12 LGB, 275-gallon tank, and 150-gallon fuel tanks are as follows:

STORE	STATION					
	OUTBD		INBD		CL	
	FWD	AFT	FWD	AFT	FWD	AFT
MER-5E	–	–	–	–	C	A
GBU-12 LGB	B	B	C	C	–	–
150 Gal Tank	–	–	C	C	C	C
275 Gal Tank	–	–	C	C	C	C

MULTIPLE EJECTOR RACK, MER-5E

The MER-5E multiple ejector rack (MER) (figure 1-2) is carried on the centerline pylon and capable of carrying five MK-82 LD or MK-82 Snakeye I bombs. The MER consists of an adapter assembly with 30-inch suspension lugs, a control panel on aft end of assembly, and five individual ejector racks: a cluster of three racks forward and two racks aft. Each ejector rack contains 14-inch spaced hooks, swaybraces, arming solenoids for nose and tail fuzing, sensing switch, electrical timer for release sequencing, and an electrically activated gas ejector system utilizing one ARD 863-1 impulse cartridge. Safety devices consist of an electrical safety pin inserted in the control panel to open the electrical circuits to each cartridge breech and a safety lever on aft end of each ejector rack to mechanically lock the hooks in the closed position. Refer to figure 1-2 for location and function of MER controls and light.

MULTIPLE EJECTOR RACK, MER-5E

CHARACTERISTICS

WEIGHT	200 LB
LENGTH	155 IN
WIDTH	17 IN
HEIGHT	16 IN
SUSPENSION LUG SPACING	30 IN
EJECTOR RACK LUG SPACING	14 IN
STATION CAPABILITY	CL PYLON

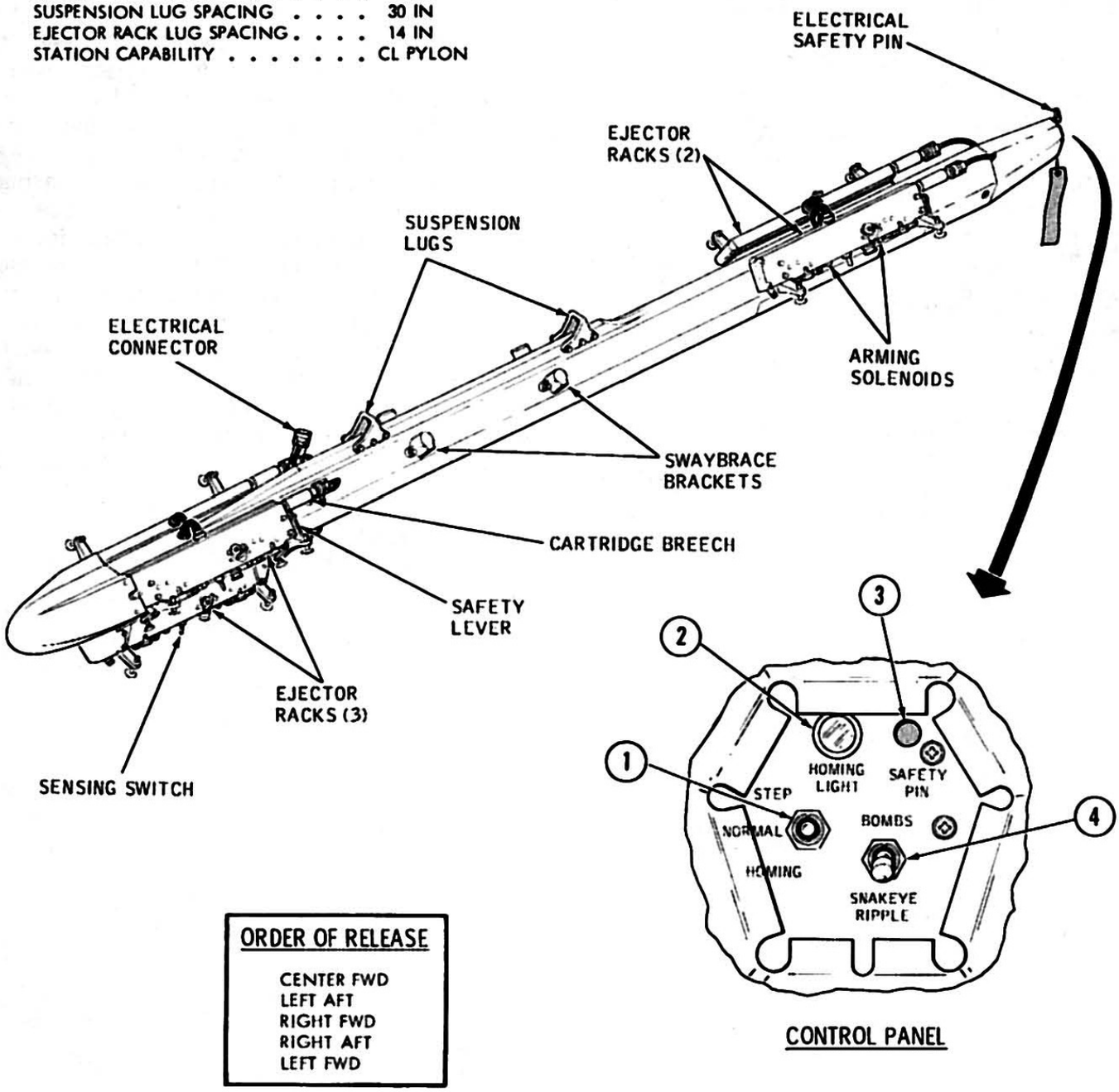

ORDER OF RELEASE

CENTER FWD
LEFT AFT
RIGHT FWD
RIGHT AFT
LEFT FWD

F-5 34-39(1)A

Figure 1-2.

MER CONTROLS AND LIGHT (Figure 1-2)

CONTROLS/LIGHT	FUNCTION	
1 Homing Switch (Spring loaded to NORMAL)	STEP	– (Momentary) Steps timer to next ejector rack.
	NORMAL	– Timer steps to next ejector rack each time bomb-rocket button is pressed or automatically steps to each rack in ripple mode.
	HOMING	– (Hold) With each sensing switch depressed, steps timer to station 1 (center forward rack).
2 HOMING LIGHT	On	– Timer homed to station 1. Light is PRESS-TO-TEST light.
3 Electrical SAFETY PIN (Access Hole)	Installed	– Opens electrical circuits to cartridge breech of each rack.
4 Release Mode Switch	BOMBS	– External Stores Selector – BOMB: Single bomb release each time bomb-rocket button is pressed. – External Stores Selector – RIPL: Bomb ripple release at interval selected by the interval switch when bomb-rocket button is pressed and held.
	SNAKEYE RIPPLE	– External Stores Selector – BOMB: Ripple release controlled by timer in MER when bomb-rocket button is pressed and held. Release interval is 275 milliseconds. NOTE SNAKEYE RIPPLE selection used only when MK-82 Snakeye I bombs loaded for ripple release.

NONNUCLEAR WEAPONS

GBU-12/B, A/B LASER-GUIDED BOMB

The GBU-12 laser-guided bomb (figure 1-3) consists of a MK-82 general-purpose bomb and a KMU-388 bomb guidance kit. The GBU-12/B uses the KMU-388/B guidance kit and the GBU-12A/B uses the KMU-388A/B guidance kit. The bomb guidance kit and associated attaching hardware provide a laser terminal guidance capability for the MK-82. No specific carriage equipment or weapon fire control system is necessary; the weapon is carried on the wing pylons and released thru normal weapons release controls. No electrical connectors exist between aircraft and weapon. Weapon monitoring or controlling functions are not required from the cockpit. The guidance systems are mounted on the weapon to become the extreme forward and rear sections. The major components of the guidance kit are the computer control group and the airfoil group. The computer control group consists of laser illumination detector, bomb guidance computer, and the guided bomb control. The airfoil group consists of the guided bomb wing assembly, forward adapt assembly, and the four bomb guidance fins.

LASER ILLUMINATION DETECTOR

The laser illumination detector, the forward unit of the computer control group, consists of a detector dome, optical equipment, laser detector, and signal mixer and preamplifier networks. The detector dome is gimbal-mounted by a universal joint assembly. During bomb flight, the detector boresight axis is maintained along the bomb velocity vector by the ring stabilizer. The four-quadrant detector receives invisible laser energy in the near-infrared spectrum. The detector, in turn, generates signals with characteristics that are a function of the detector quadrant or quadrants receiving the energy. These signals, which eventually become both pitch and yaw commands, are directed to the bomb guidance computer.

BOMB GUIDANCE COMPUTER

The bomb guidance computer receives the detector signals and performs the electric processes that develop the command signals and operate the guided bomb control unit. Some of the computer components include the log amplifier, comparator logic, and control logic circuits. The amplifier video processing circuits amplify the weak (long-range) video signals and attenuate the strong (close-range) signals in direct proportion to the strength of the signals. This enables continuous detection of both weak and then very strong signals by the same system. The comparator network, receiving the output of the amplifier, develops the error signals that represent the direction (left or right, up or down) to be taken for correction of weapon flight. The control logic then converts these error signals into solenoid drive signals, which, in turn, operate the proper set of steering solenoids. The control logic also contains circuits that place the commands in a guidance fin trail status if guidance signals are lost or if signal inputs are of insufficient strength.

GUIDED BOMB CONTROL

The guided bomb control consists of the four movable guidance fins from the airfoil group, four solenoids, a thermal battery, and a gas generator. These units provide the drive force that moves the fins in accordance with the commands generated by the computer. Each guidance fin pair, which shares a common shaft, is driven in a bang-bang manner to a total of 5.5 degrees movement in either direction. In the absence of any command, the guidance fins are maintained in trail position by the airstream.

The thermal battery firing pin of the GBU-12/B LGB is safed by an arming wire. The arming wire is routed aft thru an arming wire guide and secured to the forward bomb

GBU-12/B, A/B LASER GUIDED BOMB

HIGH SPEED

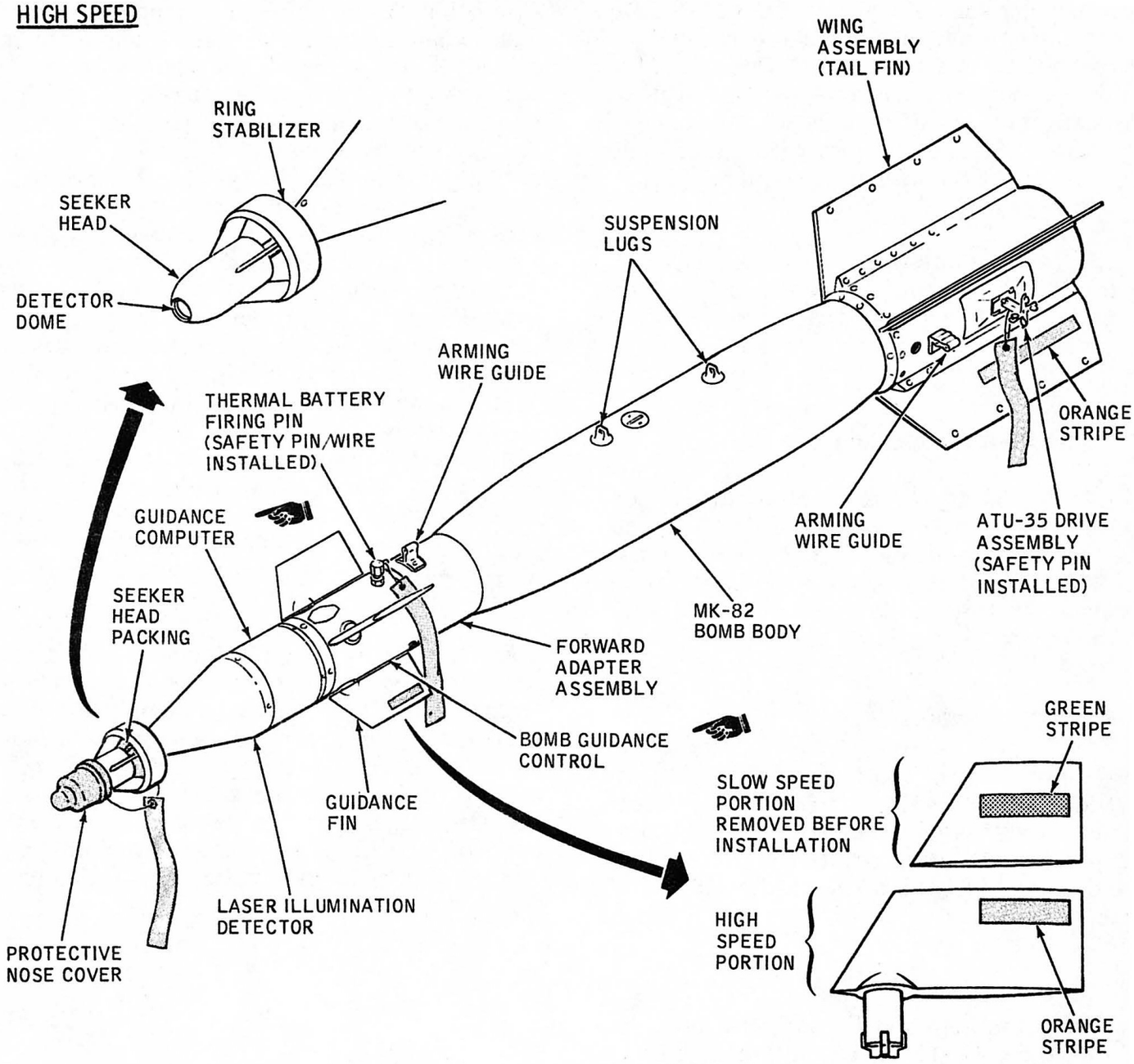

CHARACTERISTICS

WEIGHT	605 LB
LENGTH	126 IN
DIAMETER	11 IN
BOMB GUIDANCE KIT	KMU-388/B, A/B
WING ASSEMBLY	HIGH SPEED
WING SPAN (W/O EXTENDERS)	27 IN
SUSPENSION LUG SPACING	14 IN
STATION COMPATIBILITY	INBD & OUTBD WING PYLONS
FUZES	FMU-26B/B NOSE/TAIL, M905 TAIL WITH ATU-35 DRIVE ASSEMBLY
CARRIAGE/RELEASE/JETTISON LIMITS	REFER TO FLIGHT MANUAL SUPPLEMENT

Note

HIGH SPEED GUIDANCE FINS ONLY AUTHORIZED.

F-5 34-43(1)A

Figure 1-3.

suspension lug. A swivel and link is installed on the arming wire to secure the wire to the nose arming solenoid. The GBU-12A/B LGB thermal battery firing pin is safed by a pull pin that receives an arming cable. One end of the cable is secured to an arming wire guide aft of the firing pin, routed forward thru the pull pin and aft thru the arming wire guide, and secured to the bomb rack forward swaybrace and safetywired.

Guidance is activated at release. As the bomb is released, the arming wire/cable is pulled, releasing a firing pin that activates the thermal battery.

FORWARD ADAPTER ASSEMBLY

The forward adapter assembly provides the mounting and interfacing structure between the computer control group and the bomb. An FMU-26B/B electrical fuze is installed thru the adapter and into the nose fuze well of the bomb.

GUIDED BOMB WING ASSEMBLY

The guided bomb wing assembly (tail fin) provides the necessary lift for bomb maneuvering flight. Access holes in the wing fairing provide mounting points for the ATU-35 drive assembly, which drives the M905 tail fuze.

NOTE

Only the high-speed configuration of the GBU-12 LGB is authorized; this configuration includes guidance fins without extenders and a 27-inch tail fin wing assembly.

OPERATION

Operation of the bomb commences upon release when the arming wire is withdrawn from the M905 tail fuze or the arming lanyards pulled on the FMU series fuzes, permitting the fuzes to arm. On release the thermal battery arming wire/cable is pulled releasing a firing pin that activates the thermal battery, generating power for the computer control group. The bomb guidance system, sensing the laser energy, devises azimuth and elevation steering commands for the movable guidance fins to provide steering to the illuminated target. In the event of failure of the computer control group, the bomb will fall in the same manner as a conventional unguided bomb. Upon impact with the target, one or both fuzes operate, igniting the explosive train, which relays and amplifies the blast in order to detonate the bursting charge of the bomb. If either fuze (nose or tail) malfunctions, the other will cause detonation of the bomb.

If the bomb is released in the safe condition, the M905 fuze arming wire is not withdrawn from the ATU-35 drive assembly or the FMU-series fuze arming lanyards are not pulled without fuze operation, the bomb will usually be a dud. The thermal battery on the GBU-12/B will not be activated; however, on the GBU-12A/B the thermal battery will be activated and the bomb will drop in a safe but guided condition.

NONNUCLEAR WEAPON FUZES

BOMB-FUZE COMPATIBILITY

Fuzes compatible with the GBU-12/B, A/B LGB include the FMU-26B/B nose/tail fuze or the M905 tail fuze coupled to the ATU-35 drive assembly.

ARMING WIRE/LANYARD/CABLE INSTALLATION

The arming wire/lanyard/cable installations for the GBU-12/B, A/B LGB are shown in figure 1-4.

GBU-12/B, A/B LGB ARMING WIRE/ LANYARD/CABLE INSTALLATION

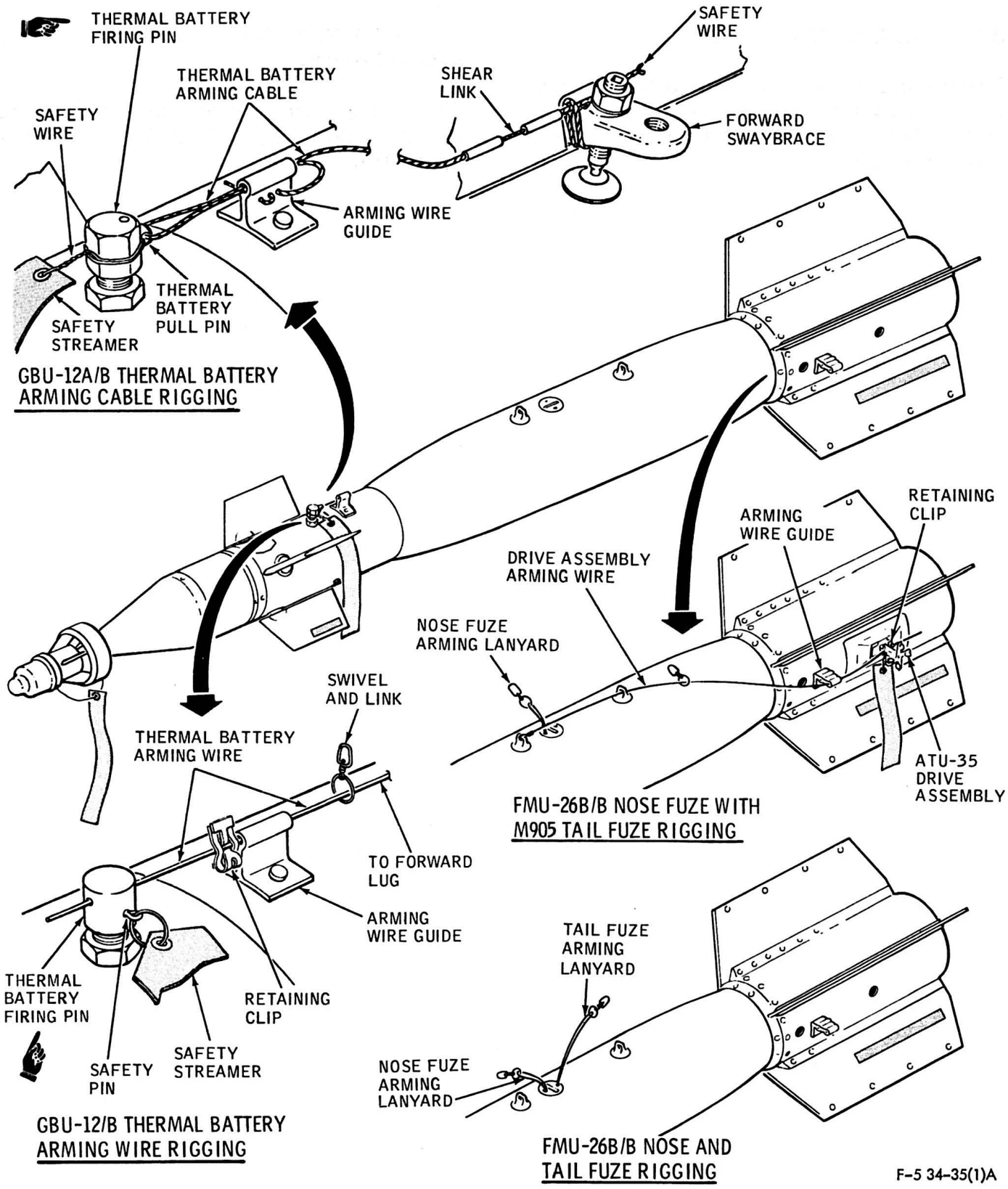

Figure 1-4.

SECTION II

NORMAL PROCEDURES

F-5 34-4(1)

TABLE OF CONTENTS

	Page
Introduction	2-1
Preflight Procedures	2-1
In-Flight Procedures	2-3

INTRODUCTION

SCOPE

This section contains normal procedures required by the pilot to perform preflight and in-flight operations for delivery of MK-82 LD, MK-82 Snakeye I bombs from the MER-5E and GBU-12 Laser-Guided bombs. Condensed nonnuclear weapons delivery procedures are contained in the Pilot's Nonnuclear Weapons Delivery Checklist, T.O. 1F-5E(II)-34-1-1CL-1.

Exterior inspections preceded by a star (★) are considered SAFETY OF FLIGHT ITEMS which should be checked by the pilot if time permits.

PREFLIGHT PROCEDURES

EXTERIOR INSPECTION

PYLONS WITH STORES

1. Bomb Rack Safety Pins - Installed.
2. Pylon Jettison Safety Pins - As Required.

★3. Impulse Cartridges - As Required.

★4. Orifice Pins - Check.

STORE	STATION					
	OUTBD		INBD		CL	
	FWD	AFT	FWD	AFT	FWD	AFT
MER-5E	–	–	–	–	C	A
GBU-12 LGB	B	B	C	C	–	–
150 Gal Tank	–	–	C	C	C	C
275 Gal Tank	–	–	C	C	C	C

5. Pylon Ordnance Selector - As Required.

STORE	SELECTOR POSITION
MER-5E	SUU-20( ) MER
GBU-12 LGB	BOMB
Tank	TANK

6. Swaybraces - Tight.

MER-5E WITH BOMBS

1. Electrical Safety Pin - Installed.
2. Safety Lever (Each Rack) - Locked.

   In locked position, safety lever is 90° to rack.

3. Security on Pylon - Check.
4. Swaybraces (Each Rack) - Tight.
5. ★ Impulse Cartridge (Each Rack) - As Required.
6. Release Mode Switch - As Required.

BOMB (GBU-12 LGB)

1. Protective Nose Cover, Seeker Head Packing - Removed.
2. Detector Dome - No Damage. Verify that dome window is undamaged and free of cracks and scratches.
3. Seeker Head - Free of Swivel.
4. Guidance Fins - Secured, Extenders Removed.
5. GBU-12/B:
   a. Thermal Battery Arming Wire and Clip - Installed.
   b. Swivel and Link - Secured in Nose Arming Solenoid.
6. GBU-12A/B:
   a. Thermal Battery Arming Cable - Installed.
   b. Arming Cable - Secured to Bomb Rack Forward Swaybrace.
7. Thermal Battery Safety Devices - Removed.
8. ★ Fuzes - Check Recorded Settings.

WARNING

(FMU-26) Consider bomb armed if lanyard has been disturbed from normal position. Call EOD personnel immediately.

9. (FMU-26) Lanyard Swivel and Link - Secured in Arming Solenoid:
   a. Nose Fuze - Center Arming Solenoid.
   b. Tail Fuze - Aft Arming Solenoid.
10. ★ Wing Assembly - X-Configuration.
11. Wing Extenders - Removed.
12. (ATU-35): Arming wire(s) and clip(s) - Installed.

    Arming wire(s) should extend approximately 1½ to 2 inches beyond drive assembly.

13. (M905) Arming Wire Swivel and Link - Secured in Tail Arming Solenoid.

IN-FLIGHT PROCEDURES

BOMBS (GP, HIGH DRAG AND LGB)

BEFORE RELEASE

1. Sight Mode Selector - MAN.
2. Sight Depression - Set Computed Depression.
3. Bombs Arm Switch - As Required.
4. Armament Position Selector Switch(es) - As Required.

   CL switch must be up for release of bombs from MER.
5. External Stores Selector - As Required.

WARNING

Do not select RIPL and CL switch up if MK-82 Snakeye I bombs are loaded on MER. The release interval may cause bombs to collide during release.

6. Interval Switch - As Required.
7. Jettison Selector Switch - OFF.

RELEASE

1. Bomb-Rocket Button - Press.

   (MER) With SNAKEYE RIPPLE selected, the button must be held pressed for approximately 2 seconds to ensure release of all bombs.

WARNING

(MK-82 SE) To provide a margin of safety in the event of retarding fin failure resulting in a low-drag bomb trajectory, a 4.0 G pullup or a 4.0 G banked turn escape maneuver should be executed immediately after bomb/last bomb in ripple is released.

CAUTION

Speed brake should be IN for release of stores from the CL position within certain ranges of airspeed. Refer to the flight manual T.O. 1F-5E-1 or T.O. 1F-5F-1 for the stores release limits.

SECTION III

EMERGENCY PROCEDURES

F-5 34-5(1)

TABLE OF CONTENTS

	Page
Emergency Release Procedures	3-1
Firefighting Criteria	3-1

EMERGENCY RELEASE PROCEDURES

EMERGENCY RELEASE

The MER can be jettisoned with or without bombs loaded, using the Emergency ALL Jettison Button, External Stores Jettison T-handle or the Select Jettison controls. The bombs cannot be jettisoned from the MER using the jettison system.

FIREFIGHTING CRITERIA

FIREFIGHTING AND EVACUATION

See figure 3-1.

FIRE WITHDRAWAL TIME AND DISTANCE

WEAPON/DEVICE	WITHDRAWAL TIME – MINUTES	WITHDRAWAL DISTANCE – FEET (NONESSENTIAL PERSONNEL)
GBU-12/B, A/B LASER GUIDED BOMB	2.0	2000
MK-82 LDGP OR SNAKEYE I BOMBS	2.0	2000

DEFINITION

WITHDRAWAL TIME – TIME WEAPON/DEVICE ENVELOPED IN FIRE BEFORE IT CAN BE EXPECTED TO FUNCTION

F-5 34-76(3)

Figure 3-1.

SECTIONS IV AND V

(Refer to T.O. 1F-5E-34-1-1)

SECTION VI

PLANNING CHARTS AND TABLES

F-5 34-97(1)

TABLE OF CONTENTS

BOMBING TABLES — LEVEL AND DIVE RELEASE — MER-5E

Table		Page
6-1	MK-82 LDGP Bomb	6-2
6-2	MK-82 Bomb Ripple Release	6-13
6-3	MK-82 Snakeye I - High Drag	6-25
6-4	MK-82 Snakeye I - High Drag Ripple Release	6-32

Table 6-1. (Sheet 1)

LEVEL BOMBING TABLES
FOR
MK-82 500LB LDGP BOMB
MER-5E RELEASE CONDITIONS

DIVE ANGLE DEG	ALT ABOVE TGT FT	TAS KTS	BOMB RANGE FT	TIME OF FLIGHT SEC	SLANT RANGE FROM REL FT	IMPACT ANGLE DEG	SIGHT DEP FROM FLIGHT PATH MILS	WIND CORRECTION FACTORS HEAD MILS/KNOT	TAIL MILS/KNOT	CROSS DRIFT FT/KNOT	CROSS CRAB FT/KNOT
0	500	360	3230	5.39	3269	17	159	.46	-.43	9.1	.1
		400	3586	5.39	3621	15	143	.37	-.35	9.1	.1
		440	3941	5.39	3973	14	130	.31	-.29	9.1	.1
		480	4295	5.40	4324	13	120	.26	-.25	9.1	.2
		520	4649	5.40	4676	12	111	.22	-.21	9.1	.2
		560	5001	5.40	5026	11	103	.19	-.18	9.1	.2
0	600	360	3548	5.92	3598	18	173	.49	-.47	10.0	.1
		400	3938	5.93	3983	17	156	.40	-.38	10.0	.2
		440	4327	5.93	4369	15	142	.33	-.32	10.0	.2
		480	4716	5.93	4754	14	130	.28	-.27	10.0	.2
		520	5104	5.94	5139	13	121	.24	-.23	10.0	.2
		560	5490	5.94	5522	12	112	.21	-.20	10.0	.2
0	700	360	3839	6.42	3903	20	186	.53	-.50	10.8	.2
		400	4261	6.42	4318	18	168	.43	-.41	10.8	.2
		440	4682	6.43	4734	16	153	.36	-.34	10.8	.2
		480	5102	6.43	5150	15	140	.30	-.29	10.9	.2
		520	5521	6.43	5565	14	130	.26	-.25	10.9	.2
		560	5938	6.44	5979	13	121	.22	-.22	10.9	.3
0	800	360	4110	6.88	4187	21	198	.56	-.53	11.6	.2
		400	4561	6.88	4631	19	179	.46	-.44	11.6	.2
		440	5012	6.89	5075	17	163	.38	-.36	11.6	.2
		480	5461	6.89	5519	16	150	.32	-.31	11.6	.3
		520	5909	6.90	5963	15	138	.28	-.26	11.6	.3
		560	6354	6.90	6405	14	129	.24	-.23	11.6	.3
0	900	360	4364	7.31	4456	22	209	.59	-.56	12.3	.2
		400	4843	7.32	4926	20	189	.48	-.46	12.3	.2
		440	5321	7.32	5396	18	172	.40	-.39	12.4	.3
		480	5797	7.33	5867	17	158	.34	-.33	12.4	.3
		520	6273	7.33	6337	16	146	.29	-.28	12.4	.3
		560	6745	7.34	6805	15	136	.25	-.24	12.4	.3
0	1000	360	4604	7.72	4712	23	220	.62	-.59	13.0	.2
		400	5109	7.73	5206	21	199	.51	-.48	13.0	.3
		440	5613	7.73	5701	19	181	.42	-.40	13.0	.3
		480	6115	7.74	6196	18	166	.36	-.34	13.1	.3
		520	6616	7.74	6691	17	154	.31	-.29	13.1	.3
		560	7115	7.75	7185	16	143	.27	-.26	13.1	.4
0	1100	360	4832	8.11	4956	24	230	.65	-.62	13.7	.3
		400	5362	8.12	5474	22	208	.53	-.51	13.7	.3
		440	5890	8.12	5992	20	190	.44	-.42	13.7	.3
		480	6417	8.13	6510	19	174	.37	-.36	13.7	.4
		520	6942	8.13	7028	17	161	.32	-.31	13.7	.4
		560	7463	8.14	7544	16	150	.28	-.27	13.7	.4

Table 6-1. (Sheet 2)

LEVEL BOMBING TABLES
FOR
MK-82 500LB LDGP BOMB
MER-5E RELEASE CONDITIONS

DIVE ANGLE DEG	ALT ABOVE TGT FT	TAS KTS	BOMB RANGE FT	TIME OF FLIGHT SEC	SLANT RANGE FROM REL FT	IMPACT ANGLE DEG	SIGHT DEP FROM FLIGHT PATH MILS	WIND CORRECTION FACTORS HEAD MILS/KNOT	TAIL	CROSS DRIFT FT/KNOT	CROSS CRAB FT/KNOT
0	1200	360	5050	8.48	5191	25	239	.67	-.64	14.3	.3
		400	5603	8.49	5730	23	217	.55	-.53	14.3	.3
		440	6155	8.50	6270	21	198	.46	-.44	14.3	.4
		480	6704	8.50	6811	20	182	.39	-.37	14.4	.4
		520	7253	8.51	7351	18	168	.33	-.32	14.4	.4
		560	7797	8.52	7889	17	157	.29	-.28	14.4	.5
0	1300	360	5259	8.84	5417	26	249	.70	-.66	14.9	.3
		400	5834	8.85	5977	24	225	.57	-.55	14.9	.3
		440	6408	8.86	6539	22	205	.48	-.46	14.9	.4
		480	6980	8.86	7100	20	189	.40	-.39	15.0	.4
		520	7551	8.87	7662	19	175	.35	-.33	15.0	.4
		560	8117	8.88	8220	18	163	.30	-.29	15.0	.5
0	1400	360	5459	9.19	5636	27	257	.72	-.68	15.5	.3
		400	6056	9.19	6216	25	233	.59	-.56	15.5	.4
		440	6652	9.20	6797	23	213	.49	-.47	15.5	.4
		480	7245	9.21	7379	21	196	.42	-.40	15.5	.4
		520	7837	9.22	7961	20	181	.36	-.35	15.6	.5
		560	8424	9.22	8539	18	169	.31	-.30	15.6	.5
0	1500	360	5652	9.52	5848	28	266	.74	-.71	16.1	.4
		400	6270	9.53	6447	25	241	.61	-.58	16.1	.4
		440	6887	9.53	7048	23	220	.51	-.49	16.1	.4
		480	7501	9.54	7649	22	202	.43	-.42	16.1	.5
		520	8113	9.55	8250	20	187	.37	-.36	16.1	.5
		560	8720	9.56	8848	19	174	.32	-.31	16.1	.6
0	1600	360	5839	9.84	6054	29	274	.77	-.73	16.6	.4
		400	6477	9.85	6672	26	248	.63	-.60	16.6	.4
		440	7113	9.86	7291	24	227	.53	-.50	16.6	.5
		480	7747	9.87	7911	22	209	.45	-.43	16.7	.5
		520	8379	9.87	8531	21	193	.38	-.37	16.7	.6
		560	9006	9.88	9147	20	180	.33	-.32	16.7	.6
0	1700	360	6020	10.15	6255	29	282	.79	-.74	17.1	.4
		400	6678	10.16	6891	27	255	.65	-.62	17.1	.5
		440	7333	10.17	7528	25	233	.54	-.52	17.2	.5
		480	7986	10.18	8165	23	215	.46	-.44	17.2	.5
		520	8637	10.19	8803	22	199	.39	-.38	17.2	.6
		560	9282	10.20	9437	20	185	.34	-.33	17.2	.6
0	1800	360	6196	10.46	6452	30	290	.80	-.76	17.6	.4
		400	6872	10.46	7104	28	262	.66	-.63	17.7	.5
		440	7546	10.47	7758	26	240	.55	-.53	17.7	.5
		480	8218	10.48	8413	24	221	.47	-.45	17.7	.6
		520	8887	10.49	9068	22	205	.41	-.39	17.7	.6
		560	9551	10.50	9719	21	191	.35	-.34	17.7	.7

Table 6-1. (Sheet 3)

LEVEL BOMBING TABLES
FOR
MK-82 500LB LDGP BOMB
MER-5E RELEASE CONDITIONS

DIVE ANGLE DEG	ALT ABOVE TGT FT	TAS KTS	BOMB RANGE FT	TIME OF FLIGHT SEC	SLANT RANGE FROM REL FT	IMPACT ANGLE DEG	SIGHT DEP FROM FLIGHT PATH MILS	WIND CORRECTION FACTORS HEAD MILS/KNOT	TAIL MILS/KNOT	CROSS DRIFT FT/KNOT	CROSS CRAB FT/KNOT
0	1900	360	6366	10.75	6643	31	297	.82	-.78	18.1	.5
		400	7061	10.76	7312	28	269	.68	-.65	18.2	.5
		440	7753	10.77	7983	26	246	.57	-.54	18.2	.6
		480	8443	10.78	8654	24	227	.48	-.46	18.2	.6
		520	9130	10.79	9326	23	210	.42	-.40	18.2	.7
		560	9811	10.80	9993	21	196	.36	-.35	18.2	.7
0	2000	360	6532	11.04	6831	31	304	.84	-.80	18.6	.5
		400	7245	11.05	7516	29	276	.69	-.66	18.6	.5
		440	7955	11.06	8202	27	252	.58	-.56	18.7	.6
		480	8662	11.07	8890	25	232	.49	-.47	18.7	.6
		520	9367	11.08	9578	23	215	.43	-.41	18.7	.7
		560	10065	11.09	10262	22	201	.37	-.36	18.7	.7
0	2500	360	7304	12.38	7720	34	337	.92	-.88	20.9	.6
		400	8100	12.39	8477	32	306	.76	-.73	20.9	.7
		440	8892	12.40	9237	30	280	.64	-.62	20.9	.7
		480	9681	12.42	9998	28	258	.55	-.53	21.0	.8
		520	10467	12.43	10761	26	240	.47	-.46	21.0	.9
		560	11243	12.44	11518	24	224	.41	-.40	21.0	.9
0	3000	360	8000	13.60	8544	37	367	.99	-.94	22.9	.7
		400	8870	13.61	9364	34	333	.82	-.79	23.0	.8
		440	9736	13.62	10188	32	306	.70	-.67	23.0	.9
		480	10598	13.64	11015	30	282	.59	-.57	23.0	.9
		520	11457	13.65	11843	28	262	.51	-.50	23.0	1.0
		560	12304	13.67	12664	26	244	.45	-.43	23.1	1.1
0	3500	360	8639	14.72	9321	39	393	1.05	-1.00	24.8	.8
		400	9577	14.73	10196	36	358	.88	-.84	24.9	.9
		440	10510	14.75	11078	34	328	.74	-.71	24.9	1.0
		480	11440	14.77	11963	32	303	.64	-.61	24.9	1.1
		520	12364	14.78	12850	30	282	.55	-.53	24.9	1.2
		560	13275	14.80	13728	28	263	.48	-.47	25.0	1.3
0	4000	360	9232	15.76	10061	41	418	1.10	-1.05	26.6	1.0
		400	10233	15.78	10987	38	381	.92	-.88	26.6	1.0
		440	11229	15.80	11920	36	350	.78	-.75	26.7	1.1
		480	12220	15.82	12858	34	323	.67	-.65	26.7	1.2
		520	13207	15.83	13799	32	300	.58	-.56	26.7	1.3
		560	14175	15.86	14729	30	281	.51	-.50	26.8	1.5

Table 6-1. (Sheet 4)

DIVE BOMBING TABLES
FOR
MK-82 500LB LDGP BOMB
MER-5E RELEASE CONDITIONS

DIVE ANGLE DEG	ALT ABOVE TGT FT	TAS KTS	BOMB RANGE FT	TIME OF FLIGHT SEC	SLANT RANGE FROM REL FT	IMPACT ANGLE DEG	SIGHT DEP FROM FLIGHT PATH MILS	WIND CORRECTION FACTORS HEAD MILS/KNOT	TAIL MILS/KNOT	CROSS FT/KT
15	1000	360	2502	4.32	2695	28	123	1.06	-1.01	7.3
		400	2628	4.09	2812	26	106	.92	-.88	6.9
		440	2737	3.87	2914	24	93	.81	-.78	6.5
		480	2832	3.67	3003	23	81	.72	-.69	6.2
		520	2915	3.49	3081	22	72	.65	-.63	5.9
		560	2987	3.32	3150	22	64	.59	-.57	5.6
15	1500	360	3389	5.88	3706	31	160	1.14	-1.09	9.9
		400	3586	5.60	3887	29	139	.99	-.94	9.5
		440	3761	5.34	4050	28	122	.87	-.83	9.0
		480	3917	5.10	4195	26	108	.77	-.74	8.6
		520	4056	4.88	4325	25	96	.69	-.67	8.2
		560	4180	4.67	4441	24	86	.63	-.61	7.9
15	2000	360	4162	7.24	4618	34	191	1.21	-1.15	12.2
		400	4428	6.94	4858	32	167	1.04	-1.00	11.7
		440	4667	6.65	5077	30	147	.91	-.88	11.2
		480	4883	6.38	5276	29	131	.81	-.78	10.8
		520	5077	6.13	5457	27	117	.73	-.70	10.3
		560	5252	5.90	5620	26	105	.66	-.64	10.0
15	2500	360	4856	8.47	5462	37	219	1.26	-1.20	14.3
		400	5186	8.15	5757	35	192	1.09	-1.04	13.8
		440	5486	7.85	6028	33	170	.95	-.92	13.2
		480	5759	7.56	6278	31	152	.84	-.81	12.8
		520	6008	7.28	6508	29	136	.76	-.73	12.3
		560	6233	7.03	6716	28	123	.68	-.66	11.9
15	3000	400	5881	9.27	6602	37	215	1.13	-1.08	15.6
		440	6238	8.95	6922	35	191	.99	-.95	15.1
		480	6567	8.64	7220	33	171	.88	-.84	14.6
		520	6868	8.35	7495	31	154	.78	-.76	14.1
		560	7142	8.09	7746	30	139	.71	-.69	13.6
15	3500	440	6938	9.98	7771	37	210	1.02	-.98	16.8
		480	7319	9.66	8113	35	189	.90	-.87	16.3
		520	7671	9.36	8432	33	170	.81	-.78	15.8
		560	7991	9.08	8724	31	155	.73	-.71	15.3
15	4000	480	8026	10.63	8968	36	205	.93	-.90	17.9
		520	8427	10.31	9328	34	186	.83	-.80	17.4
		560	8791	10.03	9659	33	169	.75	-.73	16.9
15	4500	520	9142	11.22	10189	36	200	.85	-.83	18.9
		560	9549	10.93	10556	34	183	.77	-.75	18.4
15	5000	520	9822	12.08	11022	37	214	.87	-.84	20.4
		560	10270	11.80	11422	35	196	.79	-.77	19.9
15	5500	560	10958	12.63	12261	37	208	.81	-.78	21.3
15	6000	560	11619	13.43	13076	38	220	.83	-.80	22.7

Table 6-1. (Sheet 5)

DIVE BOMBING TABLES
FOR
MK-82 500LB LDGP BOMB
MER-5E RELEASE CONDITIONS

DIVE ANGLE DEG	ALT ABOVE TGT FT	TAS KTS	BOMB RANGE FT	TIME OF FLIGHT SEC	SLANT RANGE FROM REL FT	IMPACT ANGLE DEG	SIGHT DEP FROM FLIGHT PATH MILS	WIND CORRECTION FACTORS HEAD MILS/KNOT	TAIL MILS/KNOT	CROSS FT/KT
20	1000	360	2076	3.69	2305	30	105	1.24	-1.18	6.2
		400	2157	3.44	2377	29	90	1.09	-1.04	5.8
		440	2224	3.23	2439	28	78	.97	-.93	5.5
		480	2281	3.04	2491	27	68	.87	-.84	5.1
		520	2330	2.86	2535	26	60	.79	-.76	4.8
		560	2371	2.71	2574	25	53	.72	-.70	4.6
20	1500	360	2872	5.11	3240	34	137	1.30	-1.24	8.6
		400	3006	4.82	3360	32	118	1.14	-1.09	8.1
		440	3122	4.55	3464	30	103	1.01	-.97	7.7
		480	3223	4.31	3555	29	90	.90	-.87	7.3
		520	3309	4.08	3633	28	80	.82	-.79	6.9
		560	3385	3.88	3702	27	71	.75	-.72	6.5
20	2000	360	3579	6.39	4100	37	166	1.35	-1.29	10.8
		400	3768	6.06	4266	35	143	1.18	-1.13	10.2
		440	3933	5.75	4413	33	125	1.04	-1.00	9.7
		480	4078	5.47	4542	31	110	.94	-.90	9.2
		520	4206	5.21	4657	30	98	.85	-.82	8.8
		560	4318	4.97	4758	29	88	.77	-.75	8.4
20	2500	360	4221	7.56	4906	39	191	1.39	-1.33	12.8
		400	4463	7.20	5116	37	166	1.22	-1.17	12.2
		440	4678	6.86	5304	35	146	1.08	-1.04	11.6
		480	4868	6.55	5472	33	129	.96	-.93	11.1
		520	5037	6.26	5623	32	115	.87	-.84	10.6
		560	5186	5.99	5757	31	103	.79	-.77	10.1
20	3000	360	4813	8.65	5672	41	214	1.43	-1.36	14.6
		400	5107	8.26	5923	39	187	1.25	-1.20	13.9
		440	5369	7.90	6150	37	165	1.10	-1.06	13.3
		480	5604	7.56	6357	35	146	.99	-.95	12.8
		520	5815	7.25	6543	34	131	.89	-.86	12.2
		560	6001	6.96	6709	32	118	.81	-.79	11.8
20	3500	400	5708	9.26	6696	41	206	1.27	-1.22	15.6
		440	6017	8.88	6961	39	182	1.13	-1.09	15.0
		480	6296	8.52	7203	37	162	1.01	-.98	14.4
		520	6547	8.19	7424	35	146	.91	-.88	13.8
		560	6771	7.88	7622	34	131	.83	-.81	13.3
20	4000	440	6629	9.81	7742	40	199	1.15	-1.11	16.6
		480	6950	9.43	8019	38	177	1.03	-1.00	15.9
		520	7242	9.08	8273	36	159	.93	-.90	15.3
		560	7502	8.77	8502	35	144	.85	-.82	14.8
20	4500	440	7209	10.69	8498	42	214	1.17	-1.13	18.0
		480	7572	10.30	8809	40	192	1.05	-1.01	17.4
		520	7904	9.94	9095	38	173	.95	-.92	16.8
		560	8199	9.61	9353	36	157	.87	-.84	16.2
20	5000	480	8166	11.14	9576	41	205	1.07	-1.03	18.8
		520	8536	10.76	9893	39	185	.96	-.93	18.2
		560	8866	10.43	10178	37	168	.88	-.86	17.6

Table 6-1. (Sheet 6)

DIVE BOMBING TABLES
FOR
MK-82 500LB LDGP BOMB
MER-5E RELEASE CONDITIONS

DIVE ANGLE DEG	ALT ABOVE TGT FT	TAS KTS	BOMB RANGE FT	TIME OF FLIGHT SEC	SLANT RANGE FROM REL FT	IMPACT ANGLE DEG	SIGHT DEP FROM FLIGHT PATH MILS	WIND CORRECTION FACTORS HEAD MILS/KNOT	TAIL MILS/KNOT	CROSS FT/KT
20	5500	480	8736	11.94	10323	42	218	1.08	-1.05	20.2
		520	9143	11.56	10670	40	197	.98	-.95	19.5
		560	9505	11.22	10982	39	180	.90	-.87	18.9
20	6000	520	9727	12.32	11429	41	208	.99	-.96	20.8
		560	10121	11.99	11766	40	190	.91	-.88	20.2
20	6500	520	10290	13.07	12171	42	219	1.00	-.97	22.1
		560	10715	12.73	12532	41	201	.92	-.90	21.5
20	7000	560	11289	13.46	13283	42	211	.93	-.91	22.7
30	1000	360	1470	2.83	1778	38	79	1.60	-1.53	4.8
30	1500	360	2091	4.04	2573	40	103	1.63	-1.56	6.8
		400	2157	3.75	2627	39	88	1.44	-1.39	6.3
		440	2212	3.49	2673	38	76	1.30	-1.25	5.9
		480	2257	3.27	2710	37	66	1.18	-1.14	5.5
30	2000	360	2659	5.15	3328	42	126	1.65	-1.58	8.7
		400	2759	4.81	3408	41	108	1.46	-1.41	8.1
		440	2842	4.50	3475	39	93	1.32	-1.27	7.6
		480	2912	4.23	3533	38	82	1.19	-1.16	7.1
		520	2971	3.98	3582	37	72	1.09	-1.06	6.7
		560	3022	3.76	3624	36	64	1.01	-.98	6.4
30	2500	360	3188	6.19	4051	44	146	1.67	-1.60	10.5
		400	3321	5.81	4157	43	126	1.48	-1.43	9.8
		440	3434	5.46	4248	41	109	1.33	-1.29	9.2
		480	3531	5.14	4326	40	96	1.21	-1.17	8.7
		520	3613	4.86	4394	39	85	1.11	-1.07	8.2
		560	3684	4.60	4452	38	75	1.02	-.99	7.8
30	3000	360	3683	7.17	4750	46	165	1.68	-1.62	12.1
		400	3851	6.75	4881	44	142	1.50	-1.44	11.4
		440	3995	6.36	4996	42	124	1.35	-1.30	10.7
		480	4119	6.02	5096	41	109	1.22	-1.18	10.2
		520	4226	5.70	5183	40	97	1.12	-1.08	9.6
		560	4318	5.41	5258	39	86	1.03	-1.00	9.1
30	3500	360	4149	8.10	5428	48	182	1.69	-1.63	13.7
		400	4352	7.65	5585	46	158	1.51	-1.46	12.9
		440	4528	7.23	5723	44	138	1.36	-1.31	12.2
		480	4680	6.85	5844	42	122	1.23	-1.19	11.6
		520	4812	6.50	5951	41	108	1.13	-1.09	11.0
		560	4926	6.20	6043	40	97	1.04	-1.01	10.5
30	4000	360	4592	8.98	6090	49	198	1.70	-1.64	15.2
		400	4830	8.50	6271	47	173	1.52	-1.47	14.4
		440	5037	8.06	6432	45	152	1.37	-1.32	13.6
		480	5217	7.66	6574	44	134	1.24	-1.20	12.9
		520	5376	7.29	6701	42	119	1.14	-1.10	12.3
		560	5512	6.96	6811	41	107	1.05	-1.02	11.7

Table 6-1. (Sheet 7)

DIVE BOMBING TABLES
FOR
MK-82 500LB LDGP BOMB
MER-5E RELEASE CONDITIONS

DIVE ANGLE DEG	ALT ABOVE TGT FT	TAS KTS	BOMB RANGE FT	TIME OF FLIGHT SEC	SLANT RANGE FROM REL FT	IMPACT ANGLE DEG	SIGHT DEP FROM FLIGHT PATH MILS	WIND CORRECTION FACTORS HEAD MILS/KNOT	TAIL MILS/KNOT	CROSS FT/KT
30	4500	360	5015	9.83	6738	50	213	1.71	-1.65	16.6
		400	5286	9.33	6942	48	186	1.53	-1.48	15.7
		440	5524	8.86	7125	46	164	1.38	-1.33	15.0
		480	5734	8.43	7289	45	146	1.25	-1.21	14.2
		520	5918	8.04	7435	43	130	1.15	-1.11	13.6
		560	6077	7.69	7562	42	117	1.06	-1.03	13.0
30	5000	400	5724	10.12	7601	49	199	1.54	-1.49	17.1
		440	5993	9.64	7805	47	176	1.39	-1.34	16.3
		480	6231	9.19	7989	46	156	1.26	-1.22	15.5
		520	6442	8.77	8155	44	140	1.15	-1.12	14.8
		560	6624	8.41	8299	43	126	1.07	-1.04	14.2
30	5500	400	6146	10.88	8247	50	211	1.54	-1.49	18.4
		440	6446	10.38	8473	48	187	1.39	-1.35	17.5
		480	6712	9.92	8678	47	167	1.27	-1.23	16.7
		520	6949	9.49	8862	45	150	1.16	-1.13	16.0
		560	7153	9.11	9023	44	135	1.08	-1.05	15.4
30	6000	440	6882	11.11	9131	49	198	1.40	-1.36	18.7
		480	7177	10.62	9355	48	177	1.27	-1.24	17.9
		520	7440	10.18	9558	46	159	1.17	-1.14	17.2
		560	7666	9.80	9735	45	144	1.08	-1.06	16.5
30	6500	440	7305	11.81	9778	50	208	1.41	-1.36	19.9
		480	7628	11.31	10022	48	186	1.28	-1.24	19.1
		520	7916	10.86	10243	47	168	1.18	-1.14	18.3
		560	8164	10.47	10436	46	152	1.09	-1.06	17.7
30	7000	440	7716	12.50	10418	51	218	1.41	-1.37	21.1
		480	8066	11.99	10680	49	196	1.29	-1.25	20.2
		520	8379	11.52	10918	48	176	1.18	-1.15	19.4
		560	8649	11.13	11126	46	160	1.10	-1.07	18.8
30	7500	480	8492	12.64	11330	50	204	1.29	-1.26	21.3
		520	8830	12.17	11585	48	185	1.19	-1.16	20.5
		560	9120	11.77	11808	47	168	1.11	-1.08	19.9
30	8000	480	8907	13.28	11972	51	213	1.30	-1.26	22.4
		520	9269	12.81	12244	49	193	1.19	-1.16	21.6
		560	9579	12.41	12481	48	176	1.11	-1.08	20.9
30	8500	520	9697	13.43	12895	50	200	1.20	-1.17	22.7
		560	10027	13.03	13145	49	184	1.12	-1.09	22.0
30	9000	520	10115	14.04	13539	51	208	1.20	-1.17	23.7
		560	10465	13.65	13802	49	191	1.12	-1.10	23.0
30	9500	520	10524	14.65	14177	51	215	1.21	-1.18	24.7
		560	10892	14.25	14453	50	198	1.13	-1.10	24.1
30	10000	560	11309	14.85	15096	51	205	1.14	-1.11	25.1

Table 6-1. (Sheet 8)

DIVE BOMBING TABLES
FOR
MK-82 500LB LDGP BOMB
MER-5E RELEASE CONDITIONS

DIVE ANGLE DEG	ALT ABOVE TGT FT	TAS KTS	BOMB RANGE FT	TIME OF FLIGHT SEC	SLANT RANGE FROM REL FT	IMPACT ANGLE DEG	SIGHT DEP FROM FLIGHT PATH MILS	WIND CORRECTION FACTORS HEAD MILS/KNOT	TAIL MILS/KNOT	CROSS FT/KT
45	2000	360	1699	4.04	2625	53	85	2.07	-2.00	6.8
45	2500	360	2065	4.92	3243	54	99	2.06	-1.99	8.3
		400	2125	4.55	3281	53	84	1.86	-1.80	7.7
		440	2173	4.23	3313	52	73	1.69	-1.65	7.1
45	3000	360	2414	5.77	3851	56	112	2.05	-1.99	9.7
		400	2492	5.35	3900	54	96	1.85	-1.80	9.0
		440	2556	4.99	3941	53	83	1.69	-1.64	8.4
		480	2608	4.66	3975	52	73	1.55	-1.51	7.9
45	3500	360	2748	6.58	4450	57	124	2.04	-1.98	11.1
		400	2845	6.12	4510	55	106	1.85	-1.79	10.3
		440	2925	5.72	4561	54	92	1.69	-1.64	9.7
		480	2991	5.36	4604	53	81	1.55	-1.51	9.0
		520	3048	5.04	4641	52	72	1.43	-1.40	8.5
45	4000	360	3069	7.36	5042	58	135	2.03	-1.97	12.4
		400	3185	6.87	5113	56	117	1.84	-1.79	11.6
		440	3281	6.43	5174	55	102	1.68	-1.64	10.9
		480	3363	6.04	5226	54	89	1.55	-1.51	10.2
		520	3432	5.69	5271	53	79	1.43	-1.40	9.6
		560	3490	5.38	5308	52	70	1.33	-1.30	9.1
45	4500	360	3377	8.11	5627	59	146	2.02	-1.96	13.7
		400	3513	7.59	5709	57	126	1.83	-1.78	12.8
		440	3627	7.12	5780	56	110	1.68	-1.63	12.0
		480	3724	6.70	5841	55	97	1.54	-1.51	11.3
		520	3806	6.32	5894	54	86	1.43	-1.40	10.7
		560	3875	5.99	5939	53	77	1.33	-1.31	10.1
45	5000	360	3676	8.85	6206	60	156	2.01	-1.95	14.9
		400	3831	8.29	6299	58	135	1.83	-1.78	14.0
		440	3963	7.79	6380	57	118	1.67	-1.63	13.2
		480	4075	7.34	6451	55	104	1.54	-1.50	12.4
		520	4171	6.94	6512	54	93	1.43	-1.40	11.7
		560	4252	6.59	6563	53	83	1.34	-1.31	11.1
45	5500	360	3964	9.56	6780	60	165	2.00	-1.95	16.1
		400	4140	8.98	6884	59	144	1.82	-1.77	15.2
		440	4289	8.45	6975	57	126	1.67	-1.63	14.3
		480	4418	7.98	7055	56	112	1.54	-1.50	13.5
		520	4528	7.55	7124	55	99	1.43	-1.40	12.7
		560	4620	7.18	7183	54	89	1.34	-1.31	12.1
45	6000	360	4243	10.25	7349	61	174	1.99	-1.94	17.3
		400	4439	9.64	7464	59	152	1.81	-1.77	16.3
		440	4607	9.09	7565	58	134	1.66	-1.62	15.3
		480	4752	8.60	7654	57	119	1.54	-1.50	14.5
		520	4876	8.15	7731	55	106	1.43	-1.39	13.8
		560	4980	7.77	7797	55	95	1.34	-1.31	13.1

Table 6-1. (Sheet 9)

DIVE BOMBING TABLES
FOR
MK-82 500LB LDGP BOMB
MER-5E RELEASE CONDITIONS

DIVE ANGLE DEG	ALT ABOVE TGT FT	TAS KTS	BOMB RANGE FT	TIME OF FLIGHT SEC	SLANT RANGE FROM REL FT	IMPACT ANGLE DEG	SIGHT DEP FROM FLIGHT PATH MILS	WIND CORRECTION FACTORS HEAD MILS/KNOT	TAIL MILS/KNOT	CROSS FT/KT
45	6500	360	4515	10.92	7914	62	183	1.98	-1.93	18.4
		400	4731	10.29	8039	60	160	1.81	-1.76	17.4
		440	4917	9.72	8150	59	141	1.66	-1.62	16.4
		480	5078	9.20	8248	57	125	1.53	-1.50	15.5
		520	5216	8.74	8334	56	112	1.43	-1.39	14.7
		560	5332	8.34	8407	55	101	1.34	-1.31	14.1
45	7000	360	4779	11.57	8476	63	191	1.97	-1.92	19.5
		400	5015	10.93	8611	61	168	1.80	-1.76	18.4
		440	5219	10.34	8732	59	148	1.66	-1.62	17.4
		480	5396	9.80	8839	58	132	1.53	-1.50	16.5
		520	5549	9.32	8933	57	118	1.42	-1.39	15.7
		560	5678	8.91	9013	56	107	1.34	-1.31	15.0
45	7500	360	5036	12.21	9034	63	199	1.96	-1.91	20.6
		400	5292	11.55	9179	61	175	1.79	-1.75	19.5
		440	5515	10.94	9309	60	155	1.65	-1.61	18.5
		480	5708	10.38	9425	58	138	1.53	-1.49	17.5
		520	5876	9.89	9527	57	124	1.42	-1.39	16.7
		560	6016	9.47	9615	56	112	1.34	-1.31	16.0
45	8000	360	5286	12.34	9589	64	206	1.95	-1.90	21.7
		400	5562	12.16	9744	62	182	1.79	-1.74	20.5
		440	5803	11.53	9883	60	162	1.65	-1.61	19.5
		480	6013	10.96	10008	59	144	1.52	-1.49	18.5
		520	6195	10.45	10118	58	130	1.42	-1.39	17.6
		560	6347	10.03	10212	57	118	1.34	-1.31	16.9
45	8500	360	5531	13.45	10141	64	213	1.94	-1.89	22.7
		400	5827	12.75	10305	62	189	1.78	-1.74	21.5
		440	6036	12.11	10454	61	168	1.64	-1.60	20.4
		480	6312	11.52	10588	59	150	1.52	-1.49	19.4
		520	6509	11.00	10706	58	135	1.42	-1.39	18.6
		560	6673	10.57	10806	57	123	1.34	-1.31	17.8
45	9000	400	6086	13.34	10864	63	195	1.77	-1.73	22.5
		440	6363	12.68	11022	61	174	1.64	-1.60	21.4
		480	6605	12.08	11164	60	156	1.52	-1.49	20.4
		520	6816	11.55	11290	59	140	1.42	-1.39	19.5
		560	6992	11.12	11397	58	128	1.34	-1.31	18.8
45	9500	400	6339	13.91	11421	63	201	1.77	-1.73	23.5
		440	6634	13.24	11587	62	180	1.63	-1.60	22.3
		480	6893	12.63	11737	60	161	1.52	-1.48	21.3
		520	7118	12.09	11871	59	146	1.42	-1.39	20.4
		560	7305	11.65	11984	58	133	1.34	-1.31	19.7
45	10000	400	6587	14.47	11975	64	207	1.76	-1.72	24.4
		440	6900	13.79	12149	62	185	1.63	-1.59	23.3
		480	7175	13.17	12308	61	167	1.51	-1.48	22.2
		520	7414	12.63	12448	60	151	1.42	-1.39	21.3
		560	7613	12.18	12568	59	138	1.34	-1.32	20.6

Table 6-1. (Sheet 10)

DIVE BOMBING TABLES
FOR
MK-82 500LB LDGP BOMB
MER-5E RELEASE CONDITIONS

DIVE ANGLE DEG	ALT ABOVE TGT FT	TAS KTS	BOMB RANGE FT	TIME OF FLIGHT SEC	SLANT RANGE FROM REL FT	IMPACT ANGLE DEG	SIGHT DEP FROM FLIGHT PATH MILS	WIND CORRECTION FACTORS HEAD MILS/KNOT	TAIL MILS/KNOT	CROSS FT/KT
60	3000	360	1464	4.98	3338	67	73	2.35	-2.29	8.4
60	3500	360	1676	5.71	3880	67	80	2.32	-2.27	9.6
		400	1723	5.27	3901	66	69	2.12	-2.08	8.9
60	4000	360	1880	6.42	4420	68	87	2.29	-2.25	10.8
		400	1938	5.94	4445	67	75	2.10	-2.06	10.0
		440	1985	5.53	4466	66	65	1.93	-1.90	9.3
60	4500	360	2079	7.11	4957	69	94	2.27	-2.22	12.0
		400	2147	6.59	4986	68	81	2.08	-2.04	11.1
		440	2203	6.14	5010	67	71	1.92	-1.88	10.4
60	5000	360	2271	7.78	5492	69	100	2.25	-2.20	13.1
		400	2351	7.23	5525	68	87	2.06	-2.03	12.2
		440	2416	6.75	5553	67	76	1.91	-1.87	11.4
		480	2471	6.32	5577	66	67	1.77	-1.74	10.7
60	5500	360	2458	8.43	6024	70	106	2.23	-2.18	14.2
		400	2549	7.85	6062	69	92	2.05	-2.01	13.3
		440	2624	7.34	6094	68	81	1.89	-1.86	12.4
		480	2688	6.88	6122	67	71	1.76	-1.73	11.6
		520	2741	6.48	6145	66	63	1.64	-1.62	10.9
60	6000	360	2641	9.07	6555	70	112	2.21	-2.16	15.3
		400	2743	8.46	6597	69	98	2.03	-1.99	14.3
		440	2828	7.92	6633	68	86	1.88	-1.85	13.4
		480	2900	7.44	6664	67	76	1.75	-1.72	12.6
		520	2960	7.01	6691	66	67	1.63	-1.61	11.8
		560	3011	6.65	6713	66	61	1.54	-1.52	11.2
60	6500	360	2819	9.70	7085	71	118	2.19	-2.15	16.4
		400	2932	9.06	7131	70	103	2.02	-1.98	15.3
		440	3027	8.50	7171	68	90	1.87	-1.84	14.3
		480	3108	7.99	7205	68	80	1.74	-1.71	13.5
		520	3176	7.54	7235	67	71	1.63	-1.60	12.7
		560	3233	7.16	7259	66	64	1.53	-1.51	12.1
60	7000	360	2992	10.31	7613	71	123	2.17	-2.13	17.4
		400	3117	9.65	7663	70	108	2.00	-1.97	16.3
		440	3223	9.06	7706	69	95	1.86	-1.83	15.3
		480	3312	8.53	7744	68	84	1.73	-1.70	14.4
		520	3388	8.06	7777	67	75	1.62	-1.60	13.6
		560	3451	7.67	7804	67	68	1.53	-1.51	12.9
60	7500	360	3162	10.91	8139	72	128	2.15	-2.11	18.4
		400	3298	10.22	8193	70	112	1.99	-1.95	17.3
		440	3414	9.61	8241	69	99	1.84	-1.81	16.2
		480	3513	9.06	8282	68	88	1.72	-1.69	15.3
		520	3597	8.57	8318	68	79	1.61	-1.59	14.5
		560	3666	8.17	8348	67	71	1.53	-1.50	13.8

Table 6-1. (Sheet 11)

DIVE BOMBING TABLES
FOR
MK-82 500LB LDGP BOMB
MER-5E RELEASE CONDITIONS

DIVE ANGLE DEG	ALT ABOVE TGT FT	TAS KTS	BOMB RANGE FT	TIME OF FLIGHT SEC	SLANT RANGE FROM REL FT	IMPACT ANGLE DEG	SIGHT DEP FROM FLIGHT PATH MILS	WIND CORRECTION FACTORS HEAD MILS/KNOT	TAIL MILS/KNOT	CROSS FT/KT
60	8000	360	3327	11.49	8664	72	133	2.13	-2.09	19.4
		400	3476	10.79	8722	71	117	1.97	-1.94	18.2
		440	3602	10.15	8774	70	103	1.83	-1.80	17.1
		480	3710	9.58	8818	69	92	1.71	-1.69	16.2
		520	3802	9.08	8857	68	82	1.61	-1.58	15.3
		560	3877	8.67	8890	67	74	1.52	-1.50	14.6
60	8500	360	3490	12.07	9188	72	137	2.11	-2.08	20.4
		400	3650	11.35	9251	71	121	1.96	-1.93	19.1
		440	3787	10.69	9305	70	107	1.82	-1.79	18.0
		480	3904	10.10	9354	69	96	1.70	-1.68	17.0
		520	4003	9.59	9396	68	86	1.60	-1.58	16.2
		560	4085	9.16	9431	68	78	1.52	-1.50	15.5
60	9000	360	3649	12.64	9711	73	142	2.09	-2.06	21.3
		400	3821	11.89	9777	71	125	1.94	-1.91	20.1
		440	3968	11.22	9836	70	111	1.81	-1.78	18.9
		480	4094	10.61	9888	69	99	1.70	-1.67	17.9
		520	4202	10.09	9932	69	89	1.60	-1.57	17.0
		560	4290	9.65	9970	68	81	1.52	-1.49	16.3
60	9500	360	3804	13.19	10234	73	146	2.08	-2.05	22.3
		400	3988	12.43	10303	72	129	1.93	-1.90	21.0
		440	4146	11.74	10365	71	115	1.80	-1.77	19.8
		480	4282	11.12	10420	70	103	1.69	-1.66	18.8
		520	4397	10.58	10468	69	92	1.59	-1.57	17.9
		560	4492	10.14	10509	68	84	1.51	-1.49	17.1
60	10000	360	3957	13.74	10755	73	150	2.06	-2.03	23.2
		400	4153	12.96	10828	72	133	1.92	-1.89	21.9
		440	4321	12.25	10894	71	119	1.79	-1.77	20.7
		480	4466	11.62	10952	70	106	1.68	-1.66	19.6
		520	4589	11.07	11003	69	96	1.59	-1.56	18.7
		560	4691	10.62	11046	68	87	1.51	-1.49	17.9

Table 6-2. (Sheet 1)

MK-82 500LB LDGP BOMB
RIPPLE RELEASE TABLES
FOR
MER-5E BOMB RACK

RELEASE INTERVAL = 60 MILLISECONDS
NUMBER OF RELEASES IN RIPPLE = 5

RELEASE DIVE ANGLE	RELEASE TAS KTS	RELEASE ALT ABV TGT FT	SLANT RANGE FT	RANGE REL TO CENTER OF PATTERN FT	TIME OF FALL FIRST BOMB SEC	TIME OF FALL LAST BOMB SEC	REL ALT LAST BOMB FT	PATTERN LENGTH FT	SIGHT DEP FROM FLIGHT PATH MILS	WIND CORRECTION FACTOR HEAD MILS/KNOTS	WIND CORRECTION FACTOR TAIL MILS/KNOTS	WIND CORRECTION FACTOR CROSS FT/KNOTS
10	360	1000	3251	3093	5.17	5.08	975	89	143	.87	-.82	8.65
10	400	1000	3444	3295	4.96	4.86	972	94	124	.74	-.70	8.29
10	440	1000	3620	3479	4.77	4.66	969	97	109	.64	-.61	7.95
10	480	1000	3780	3645	4.58	4.46	966	100	97	.56	-.54	7.63
10	520	1000	3925	3795	4.41	4.28	963	103	86	.50	-.48	7.33
10	560	1000	4057	3931	4.24	4.11	961	104	78	.45	-.43	7.05
10	360	1500	4334	4066	6.84	6.76	1475	98	184	.97	-.92	11.48
10	400	1500	4611	4361	6.61	6.52	1472	104	161	.82	-.79	11.08
10	440	1500	4869	4632	6.39	6.30	1469	110	143	.71	-.68	10.71
10	480	1500	5108	4883	6.18	6.08	1466	114	127	.62	-.60	10.35
10	520	1500	5329	5114	5.98	5.87	1463	118	114	.55	-.53	10.00
10	560	1500	5533	5325	5.79	5.68	1461	122	103	.50	-.48	9.68
10	360	2000	5291	4898	8.28	8.21	1975	104	219	1.05	-1.00	13.92
10	400	2000	5642	5275	8.04	7.96	1972	111	193	.89	-.85	13.50
10	440	2000	5971	5626	7.80	7.72	1969	118	172	.77	-.74	13.10
10	480	2000	6281	5954	7.58	7.49	1966	123	154	.67	-.65	12.71
10	520	2000	6570	6259	7.36	7.27	1963	129	138	.60	-.58	12.34
10	560	2000	6839	6541	7.16	7.06	1961	133	126	.53	-.52	11.99
10	360	2500	6166	5637	9.57	9.51	2475	108	249	1.11	-1.06	16.10
10	400	2500	6581	6088	9.32	9.25	2472	116	221	.95	-.91	15.66
10	440	2500	6975	6512	9.07	9.00	2469	123	197	.82	-.79	15.25
10	480	2500	7348	6910	8.84	8.75	2466	130	177	.72	-.69	14.84
10	520	2500	7700	7283	8.61	8.52	2463	136	160	.64	-.61	14.46
10	560	2500	8029	7630	8.40	8.30	2461	142	146	.57	-.55	14.09
10	360	3000	6984	6307	10.74	10.69	2975	111	276	1.17	-1.11	18.08
10	400	3000	7457	6827	10.48	10.42	2972	120	245	1.00	-.95	17.64
10	440	3000	7908	7317	10.23	10.16	2969	128	220	.86	-.83	17.21
10	480	3000	8339	7780	9.99	9.92	2966	135	198	.76	-.73	16.80
10	520	3000	8748	8217	9.75	9.67	2963	142	180	.67	-.65	16.40
10	560	3000	9131	8624	9.54	9.45	2961	148	164	.60	-.58	16.02
15	360	1500	3742	3428	5.88	5.77	1462	78	156	1.11	-1.06	9.83
15	400	1500	3925	3627	5.60	5.48	1458	81	135	.96	-.92	9.35
15	440	1500	4088	3803	5.34	5.21	1454	83	118	.84	-.81	8.91
15	480	1500	4234	3960	5.10	4.96	1450	85	104	.74	-.72	8.50
15	520	1500	4365	4099	4.88	4.73	1445	86	92	.67	-.64	8.11
15	560	1500	4481	4223	4.67	4.52	1441	86	82	.61	-.59	7.76
15	360	2000	4656	4205	7.24	7.14	1962	86	187	1.18	-1.12	12.14
15	400	2000	4899	4472	6.94	6.83	1958	89	163	1.02	-.97	11.62
15	440	2000	5120	4713	6.65	6.54	1954	93	144	.89	-.85	11.13
15	480	2000	5320	4930	6.38	6.26	1950	95	127	.79	-.76	10.67
15	520	2000	5502	5126	6.13	6.00	1945	97	114	.71	-.68	10.24
15	560	2000	5666	5301	5.90	5.76	1941	98	102	.64	-.62	9.84
15	360	2500	5502	4902	8.47	8.38	2462	91	215	1.23	-1.18	14.23
15	400	2500	5800	5233	8.15	8.05	2458	96	189	1.06	-1.02	13.68
15	440	2500	6074	5535	7.85	7.74	2454	100	167	.93	-.90	13.15
15	480	2500	6325	5810	7.56	7.44	2450	103	148	.83	-.80	12.66
15	520	2500	6556	6061	7.28	7.16	2445	106	133	.74	-.71	12.19
15	560	2500	6766	6287	7.03	6.90	2441	108	120	.67	-.65	11.76
15	360	3000	6299	5539	9.61	9.52	2962	95	241	1.28	-1.22	16.15
15	400	3000	6646	5931	9.27	9.18	2958	100	212	1.11	-1.06	15.57
15	440	3000	6970	6291	8.95	8.85	2954	105	188	.97	-.93	15.02
15	480	3000	7269	6621	8.64	8.54	2950	109	168	.86	-.83	14.50
15	520	3000	7547	6925	8.35	8.24	2945	113	151	.77	-.74	14.00
15	560	3000	7800	7200	8.09	7.97	2941	116	136	.69	-.67	13.55

Table 6-2. (Sheet 2)

MK-82 500LB LDGP BOMB
RIPPLE RELEASE TABLES
FOR
MER-5E BOMB RACK

RELEASE INTERVAL = 60 MILLISECONDS
NUMBER OF RELEASES IN RIPPLE = 5

RELEASE DIVE ANGLE	TAS KTS	ALT ABV TGT FT	SLANT RANGE FT	RANGE REL TO CENTER OF PATTERN FT	TIME OF FALL FIRST BOMB SEC	TIME OF FALL LAST BOMB SEC	REL ALT LAST BOMB FT	PATTERN LENGTH FT	SIGHT DEP FROM FLIGHT PATH MILS	WIND CORRECTION FACTOR HEAD MILS/KNOTS	WIND CORRECTION FACTOR TAIL MILS/KNOTS	WIND CORRECTION FACTOR CROSS FT/KNOTS
15	360	4000	7786	6680	11.65	11.58	3962	100	284	1.35	-1.30	19.61
15	400	4000	8222	7184	11.30	11.22	3958	107	252	1.17	-1.13	19.00
15	440	4000	8634	7651	10.95	10.87	3954	113	225	1.03	-.99	18.41
15	480	4000	9021	8085	10.63	10.53	3950	119	202	.91	-.88	17.86
15	520	4000	9384	8488	10.31	10.21	3945	123	183	.82	-.79	17.32
15	560	4000	9717	8855	10.03	9.92	3941	128	166	.74	-.72	16.83
15	360	5000	9175	7692	13.49	13.42	4962	105	322	1.41	-1.35	22.70
15	400	5000	9698	8297	13.11	13.04	4958	112	287	1.23	-1.18	22.07
15	440	5000	10176	8863	12.76	12.68	4954	119	257	1.08	-1.04	21.47
15	480	5000	10641	9393	12.41	12.33	4950	125	233	.96	-.93	20.88
15	520	5000	11080	9888	12.08	11.99	4945	131	211	.86	-.83	20.32
15	560	5000	11484	10338	11.80	11.70	4941	136	193	.78	-.76	19.82
20	360	2000	4130	3614	6.39	6.27	1950	70	161	1.32	-1.26	10.69
20	400	2000	4297	3804	6.06	5.93	1945	71	139	1.15	-1.10	10.12
20	440	2000	4445	3970	5.75	5.61	1939	73	122	1.02	-.98	9.59
20	480	2000	4575	4115	5.47	5.32	1933	73	107	.91	-.88	9.11
20	520	2000	4690	4243	5.21	5.05	1928	73	95	.82	-.79	8.66
20	560	2000	4792	4354	4.97	4.81	1922	73	84	.75	-.73	8.25
20	360	2500	4938	4259	7.56	7.45	2450	75	187	1.36	-1.30	12.67
20	400	2500	5150	4502	7.20	7.08	2445	78	162	1.19	-1.14	12.05
20	440	2500	5339	4718	6.86	6.73	2439	80	142	1.05	-1.01	11.47
20	480	2500	5509	4909	6.55	6.41	2433	81	126	.94	-.91	10.94
20	520	2500	5660	5078	6.26	6.11	2428	82	112	.85	-.82	10.44
20	560	2500	5794	5227	5.99	5.84	2422	82	100	.77	-.75	9.99
20	360	3000	5706	4853	8.65	8.54	2950	80	210	1.40	-1.34	14.51
20	400	3000	5959	5148	8.26	8.15	2945	83	183	1.22	-1.17	13.85
20	440	3000	6188	5412	7.90	7.78	2939	86	161	1.08	-1.04	13.23
20	480	3000	6395	5648	7.56	7.43	2933	88	143	.97	-.93	12.66
20	520	3000	6583	5859	7.25	7.11	2928	89	128	.87	-.85	12.12
20	560	3000	6750	6046	6.96	6.82	2922	90	115	.80	-.77	11.63
20	360	4000	7151	5928	10.62	10.53	3950	87	250	1.46	-1.40	17.85
20	400	4000	7480	6320	10.20	10.10	3945	91	220	1.28	-1.23	17.13
20	440	4000	7763	6676	9.81	9.70	3939	95	195	1.13	-1.09	16.46
20	480	4000	8061	6999	9.43	9.31	3933	98	174	1.01	-.98	15.82
20	520	4000	8317	7292	9.08	8.96	3928	100	156	.91	-.89	15.22
20	560	4000	8547	7553	8.77	8.63	3922	102	141	.83	-.81	14.68
20	360	5000	8511	6888	12.40	12.31	4950	91	285	1.50	-1.44	20.85
20	400	5000	8907	7371	11.96	11.86	4945	97	253	1.32	-1.27	20.10
20	440	5000	9276	7813	11.54	11.44	4939	101	225	1.17	-1.13	19.39
20	480	5000	9620	8219	11.14	11.03	4933	105	202	1.05	-1.02	18.71
20	520	5000	9940	8590	10.76	10.64	4928	108	182	.95	-.92	18.06
20	560	5000	10227	8921	10.43	10.31	4922	112	166	.87	-.84	17.50
20	360	6000	9812	7763	14.03	13.95	5950	95	316	1.53	-1.48	23.62
20	400	6000	10267	8331	13.57	13.49	5945	101	281	1.35	-1.30	22.84
20	440	6000	10696	8855	13.13	13.04	5939	106	252	1.20	-1.16	22.09
20	480	6000	11100	9339	12.72	12.61	5933	111	227	1.08	-1.05	21.38
20	520	6000	11478	9785	12.32	12.21	5928	115	206	.98	-.95	20.71
20	560	6000	11817	10181	11.99	11.87	5922	119	188	.90	-.87	20.13
30	360	3000	4772	3710	7.17	7.03	2927	56	161	1.65	-1.59	11.99
30	400	3000	4904	3879	6.75	6.60	2919	57	139	1.47	-1.41	11.26
30	440	3000	5019	4023	6.36	6.21	2911	57	121	1.32	-1.27	10.61
30	480	3000	5118	4147	6.02	5.85	2903	56	106	1.19	-1.16	10.01
30	520	3000	5205	4254	5.70	5.52	2895	56	94	1.09	-1.06	9.47
30	560	3000	5280	4345	5.41	5.23	2887	55	83	1.00	-.98	8.98

Table 6-2. (Sheet 3)

MK-82 500LB LDGP BOMB
RIPPLE RELEASE TABLES
FOR
MER-5E BOMB RACK

RELEASE INTERVAL = 60 MILLISECONDS
NUMBER OF RELEASES IN RIPPLE = 5

RELEASE DIVE ANGLE	RELEASE TAS KTS	RELEASE ALT ABV TGT FT	SLANT RANGE FT	RANGE REL TO CENTER OF PATTERN FT	TIME OF FALL FIRST BOMB SEC	TIME OF FALL LAST BOMB SEC	REL ALT LAST BOMB FT	PATTERN LENGTH FT	SIGHT DEP FROM FLIGHT PATH MILS	WIND CORRECTION FACTOR HEAD TAIL MILS/KNOTS	WIND CORRECTION FACTOR CROSS FT/KNOTS
30	360	3500	5451	4179	8.10	7.97	3427	60	178	1.67 -1.60	13.56
30	400	3500	5609	4383	7.65	7.50	3419	61	155	1.48 -1.43	12.78
30	440	3500	5747	4558	7.23	7.08	3411	61	135	1.33 -1.29	12.08
30	480	3500	5869	4711	6.85	6.69	3403	61	119	1.21 -1.17	11.43
30	520	3500	5975	4843	6.50	6.34	3395	61	105	1.10 -1.07	10.84
30	560	3500	6068	4957	6.20	6.02	3387	60	94	1.02 -.99	10.31
30	360	4000	6114	4624	8.98	8.86	3927	63	195	1.68 -1.62	15.05
30	400	4000	6296	4862	8.50	8.37	3919	64	169	1.50 -1.44	14.24
30	440	4000	6457	5069	8.06	7.92	3911	65	148	1.35 -1.30	13.49
30	480	4000	6600	5250	7.66	7.50	3903	66	131	1.22 -1.18	12.79
30	520	4000	6727	5409	7.29	7.12	3895	66	116	1.12 -1.08	12.16
30	560	4000	6837	5545	6.96	6.79	3887	65	104	1.03 -1.00	11.60
30	360	4500	6762	5048	9.83	9.71	4427	66	210	1.69 -1.63	16.49
30	400	4500	6968	5320	9.33	9.20	4419	68	183	1.51 -1.46	15.63
30	440	4500	7152	5559	8.86	8.72	4411	69	161	1.36 -1.31	14.84
30	480	4500	7316	5769	8.43	8.29	4403	70	143	1.23 -1.19	14.11
30	520	4500	7463	5953	8.04	7.88	4395	70	127	1.13 -1.09	13.44
30	560	4500	7590	6112	7.69	7.53	4387	70	114	1.04 -1.01	12.85
30	360	5000	7399	5453	10.64	10.52	4927	68	224	1.70 -1.64	17.86
30	400	5000	7627	5760	10.12	9.99	4919	71	196	1.52 -1.47	16.97
30	440	5000	7833	6029	9.64	9.50	4911	72	173	1.37 -1.32	16.15
30	480	5000	8018	6268	9.19	9.04	4903	73	154	1.24 -1.20	15.38
30	520	5000	8184	6479	8.77	8.62	4895	74	137	1.14 -1.10	14.68
30	560	5000	8329	6661	8.41	8.25	4887	74	123	1.05 -1.02	14.06
30	360	6000	8641	6218	12.18	12.07	5927	73	250	1.71 -1.65	20.47
30	400	6000	8912	6590	11.63	11.51	5919	75	220	1.53 -1.48	19.52
30	440	6000	9160	6921	11.11	10.98	5911	78	195	1.38 -1.34	18.64
30	480	6000	9385	7217	10.62	10.49	5903	79	174	1.26 -1.22	17.82
30	520	6000	9589	7480	10.18	10.04	5895	80	156	1.15 -1.12	17.06
30	560	6000	9767	7707	9.80	9.65	5887	81	141	1.07 -1.04	16.41
30	360	7000	9850	6930	13.62	13.52	6927	76	273	1.72 -1.66	22.91
30	400	7000	10161	7366	13.04	12.93	6919	79	242	1.54 -1.49	21.92
30	440	7000	10448	7757	12.50	12.38	6911	82	215	1.40 -1.35	20.99
30	480	7000	10712	8108	11.99	11.86	6903	84	193	1.27 -1.24	20.12
30	520	7000	10951	8422	11.52	11.38	6895	86	174	1.17 -1.14	19.33
30	560	7000	11161	8692	11.13	10.98	6887	88	158	1.09 -1.06	18.66
30	360	8000	11034	7600	14.99	14.89	7927	79	294	1.72 -1.67	25.22
30	400	8000	11382	8096	14.38	14.28	7919	83	261	1.55 -1.50	24.19
30	440	8000	11705	8545	13.82	13.70	7911	86	234	1.40 -1.36	23.22
30	480	8000	12005	8951	13.28	13.16	7903	89	210	1.28 -1.25	22.32
30	520	8000	12278	9314	12.81	12.67	7895	91	190	1.18 -1.15	21.50
30	560	8000	12516	9626	12.41	12.27	7887	93	174	1.10 -1.07	20.82
45	360	5000	6218	3697	8.85	8.70	4897	42	153	1.99 -1.93	14.80
45	400	5000	6312	3852	8.29	8.13	4885	43	133	1.80 -1.76	13.86
45	440	5000	6393	3984	7.79	7.63	4874	42	116	1.65 -1.61	13.01
45	480	5000	6464	4096	7.34	7.17	4863	42	102	1.52 -1.48	12.25
45	520	5000	6525	4192	6.94	6.76	4851	41	90	1.40 -1.37	11.56
45	560	5000	6577	4272	6.59	6.40	4840	41	81	1.31 -1.28	10.97
45	360	6000	7362	4266	10.25	10.11	5897	46	172	1.97 -1.92	17.18
45	400	6000	7478	4463	9.64	9.49	5885	47	150	1.79 -1.75	16.15
45	440	6000	7579	4631	9.09	8.93	5874	47	132	1.64 -1.60	15.21
45	480	6000	7668	4775	8.60	8.43	5863	46	116	1.52 -1.48	14.36
45	520	6000	7746	4899	8.15	7.97	5851	46	103	1.41 -1.37	13.60
45	560	6000	7812	5003	7.77	7.58	5840	46	93	1.32 -1.29	12.95

Table 6-2. (Sheet 4)

MK-82 500LB LDGP BOMB
RIPPLE RELEASE TABLES
FOR
MER-5E BOMB RACK

RELEASE INTERVAL = 60 MILLISECONDS
NUMBER OF RELEASES IN RIPPLE = 5

RELEASE DIVE ANGLE	TAS KTS	ALT ABV TGT FT	SLANT RANGE FT	RANGE REL TO CENTER OF PATTERN FT	TIME OF FALL FIRST BOMB SEC	TIME OF FALL LAST BOMB SEC	REL ALT LAST BOMB FT	PATTERN LENGTH FT	SIGHT DEP FROM FLIGHT PATH MILS	WIND CORRECTION FACTOR HEAD MILS/KNOTS	WIND CORRECTION FACTOR TAIL MILS/KNOTS	WIND CORRECTION FACTOR CROSS FT/KNOTS
45	360	7000	8489	4803	11.57	11.44	6897	49	188	1.95	-1.90	19.42
45	400	7000	8626	5040	10.93	10.78	6885	50	165	1.78	-1.74	18.32
45	440	7000	8747	5244	10.34	10.18	6874	51	146	1.64	-1.60	17.32
45	480	7000	8854	5422	9.80	9.63	6863	51	130	1.51	-1.48	16.40
45	520	7000	8949	5575	9.32	9.14	6851	50	116	1.41	-1.38	15.58
45	560	7000	9029	5703	8.91	8.73	6840	50	104	1.32	-1.29	14.89
45	360	8000	9603	5312	12.84	12.71	7897	52	204	1.93	-1.89	21.56
45	400	8000	9759	5589	12.16	12.02	7885	53	180	1.77	-1.73	20.40
45	440	8000	9899	5830	11.53	11.38	7874	54	159	1.63	-1.59	19.33
45	480	8000	10024	6040	10.96	10.80	7863	54	142	1.51	-1.48	18.36
45	520	8000	10135	6222	10.45	10.28	7851	54	127	1.41	-1.38	17.50
45	560	8000	10229	6375	10.03	9.85	7840	55	115	1.32	-1.30	16.77
45	360	9000	10705	5797	14.05	13.93	8897	54	218	1.92	-1.87	23.61
45	400	9000	10880	6113	13.34	13.20	8885	56	193	1.76	-1.72	22.40
45	440	9000	11038	6391	12.68	12.53	8874	57	172	1.62	-1.59	21.28
45	480	9000	11181	6634	12.08	11.93	8863	57	154	1.50	-1.47	20.26
45	520	9000	11307	6845	11.55	11.39	8851	58	138	1.41	-1.38	19.36
45	560	9000	11415	7021	11.12	10.94	8840	59	126	1.33	-1.30	18.61
45	360	10000	11798	6261	15.22	15.10	9897	56	231	1.90	-1.85	25.58
45	400	10000	11991	6616	14.47	14.35	9885	58	205	1.75	-1.71	24.32
45	440	10000	12166	6930	13.79	13.65	9874	59	183	1.61	-1.58	23.16
45	480	10000	12325	7205	13.17	13.02	9863	60	165	1.50	-1.47	22.10
45	520	10000	12467	7444	12.63	12.47	9851	61	149	1.41	-1.38	21.18
45	560	10000	12587	7644	12.18	12.01	9840	62	136	1.33	-1.30	20.42
60	360	9000	9718	3665	12.64	12.49	8874	33	140	2.08	-2.05	21.21
60	400	9000	9784	3837	11.89	11.74	8860	33	124	1.93	-1.90	19.94
60	440	9000	9843	3985	11.22	11.05	8846	34	110	1.80	-1.77	18.80
60	480	9000	9894	4111	10.61	10.44	8832	33	98	1.68	-1.66	17.77
60	520	9000	9940	4218	10.09	9.91	8818	33	88	1.58	-1.56	16.87
60	560	9000	9977	4307	9.65	9.46	8804	33	79	1.50	-1.48	16.12
60	360	10000	10761	3975	13.74	13.60	9874	35	149	2.05	-2.02	23.07
60	400	10000	10835	4170	12.96	12.81	9860	35	132	1.91	-1.88	21.75
60	440	10000	10901	4339	12.25	12.09	9846	35	117	1.78	-1.75	20.55
60	480	10000	10959	4484	11.62	11.45	9832	35	105	1.67	-1.64	19.47
60	520	10000	11010	4607	11.07	10.90	9818	35	94	1.57	-1.55	18.54
60	560	10000	11053	4709	10.62	10.43	9804	36	86	1.49	-1.47	17.76
60	360	11000	11801	4273	14.81	14.67	10874	36	157	2.02	-1.99	24.88
60	400	11000	11882	4492	14.00	13.85	10860	37	139	1.88	-1.85	23.50
60	440	11000	11955	4682	13.26	13.11	10846	37	124	1.76	-1.74	22.25
60	480	11000	12020	4845	12.61	12.44	10832	37	111	1.65	-1.63	21.14
60	520	11000	12077	4984	12.05	11.87	10818	38	101	1.56	-1.54	20.18
60	560	11000	12124	5099	11.58	11.39	10804	38	92	1.49	-1.47	19.38
60	360	12000	12838	4561	15.84	15.71	11874	37	164	1.99	-1.96	26.63
60	400	12000	12926	4803	15.01	14.87	11860	38	146	1.86	-1.83	25.21
60	440	12000	13005	5014	14.25	14.10	11846	39	131	1.74	-1.72	23.92
60	480	12000	13076	5196	13.58	13.42	11832	39	118	1.64	-1.62	22.78
60	520	12000	13139	5350	13.00	12.83	11818	39	107	1.56	-1.54	21.80
60	560	12000	13191	5478	12.52	12.34	11804	40	98	1.49	-1.47	20.98

Table 6-2. (Sheet 5)

MK-82 500LB LDGP BOMB
RIPPLE RELEASE TABLES
FOR
MER-5E BOMB RACK

RELEASE INTERVAL = 100 MILLISECONDS
NUMBER OF RELEASES IN RIPPLE = 5

RELEASE DIVE ANGLE	RELEASE TAS KTS	RELEASE ALT ABV TGT FT	SLANT RANGE FT	RANGE REL TO CENTER OF PATTERN FT	TIME OF FALL FIRST BOMB SEC	TIME OF FALL LAST BOMB SEC	REL ALT LAST BOMB FT	PATTERN LENGTH FT	SIGHT DEP FROM FLIGHT PATH MILS	WIND CORRECTION FACTOR HEAD MILS/KNOTS	WIND CORRECTION FACTOR TAIL MILS/KNOTS	WIND CORRECTION FACTOR CROSS FT/KNOTS
10	360	1000	3279	3123	5.17	5.01	958	149	140	.85	-.80	8.60
10	400	1000	3474	3327	4.96	4.79	953	156	122	.72	-.69	8.23
10	440	1000	3651	3511	4.77	4.58	948	162	107	.62	-.60	7.89
10	480	1000	3811	3678	4.58	4.38	944	167	94	.55	-.53	7.56
10	520	1000	3958	3829	4.41	4.20	939	170	84	.49	-.47	7.26
10	560	1000	4090	3966	4.24	4.02	934	173	75	.44	-.42	6.97
10	360	1500	4364	4098	6.84	6.71	1458	164	182	.95	-.90	11.43
10	400	1500	4644	4395	6.61	6.47	1453	174	159	.81	-.77	11.03
10	440	1500	4904	4669	6.39	6.23	1448	183	140	.70	-.67	10.65
10	480	1500	5144	4921	6.18	6.01	1444	190	125	.61	-.59	10.29
10	520	1500	5367	5153	5.98	5.80	1439	196	112	.54	-.52	9.94
10	560	1500	5571	5366	5.79	5.60	1434	202	101	.48	-.47	9.61
10	360	2000	5323	4933	8.28	8.17	1958	173	216	1.03	-.98	13.88
10	400	2000	5676	5312	8.04	7.91	1953	185	191	.88	-.84	13.46
10	440	2000	6008	5666	7.80	7.66	1948	196	169	.76	-.73	13.05
10	480	2000	6319	5995	7.58	7.43	1944	205	151	.66	-.64	12.66
10	520	2000	6611	6301	7.36	7.20	1939	214	136	.59	-.57	12.29
10	560	2000	6882	6585	7.16	6.99	1934	221	124	.53	-.51	11.94
10	360	2500	6199	5673	9.57	9.46	2458	180	247	1.10	-1.05	16.06
10	400	2500	6617	6127	9.32	9.20	2453	193	218	.93	-.89	15.63
10	440	2500	7014	6553	9.07	8.95	2448	206	195	.81	-.78	15.21
10	480	2500	7389	6953	8.84	8.70	2444	217	175	.71	-.68	14.80
10	520	2500	7743	7328	8.61	8.46	2439	227	158	.63	-.60	14.41
10	560	2500	8074	7677	8.40	8.24	2434	236	144	.56	-.54	14.04
10	360	3000	7017	6344	10.74	10.65	2958	185	274	1.15	-1.10	18.05
10	400	3000	7493	6867	10.48	10.38	2953	199	243	.98	-.94	17.61
10	440	3000	7948	7360	10.23	10.12	2948	213	218	.85	-.82	17.17
10	480	3000	8381	7825	9.99	9.86	2944	225	196	.75	-.72	16.76
10	520	3000	8792	8264	9.75	9.62	2939	236	178	.66	-.64	16.35
10	560	3000	9178	8674	9.54	9.39	2934	247	162	.59	-.57	15.97
15	360	1500	3766	3454	5.88	5.69	1437	130	153	1.09	-1.04	9.76
15	400	1500	3950	3654	5.60	5.40	1430	135	132	.94	-.90	9.28
15	440	1500	4114	3831	5.34	5.13	1423	138	115	.82	-.79	8.84
15	480	1500	4260	3988	5.10	4.87	1416	140	101	.73	-.70	8.42
15	520	1500	4391	4127	4.88	4.64	1409	142	90	.65	-.63	8.03
15	560	1500	4508	4251	4.67	4.42	1402	142	80	.59	-.57	7.67
15	360	2000	4682	4233	7.24	7.08	1937	142	185	1.16	-1.11	12.08
15	400	2000	4926	4502	6.94	6.76	1930	149	161	1.00	-.96	11.56
15	440	2000	5148	4744	6.65	6.46	1923	154	141	.87	-.84	11.07
15	480	2000	5350	4962	6.38	6.18	1916	158	125	.77	-.75	10.60
15	520	2000	5532	5158	6.13	5.91	1909	161	111	.69	-.67	10.16
15	560	2000	5696	5334	5.90	5.67	1902	163	100	.63	-.61	9.76
15	360	2500	5529	4932	8.47	8.32	2437	151	213	1.22	-1.16	14.18
15	400	2500	5829	5265	8.15	7.99	2430	159	186	1.05	-1.01	13.62
15	440	2500	6104	5569	7.85	7.67	2423	166	165	.92	-.88	13.09
15	480	2500	6357	5845	7.56	7.37	2416	171	146	.81	-.78	12.59
15	520	2500	6589	6096	7.28	7.08	2409	176	131	.73	-.70	12.12
15	560	2500	6799	6323	7.03	6.81	2402	179	118	.66	-.64	11.68
15	360	3000	6327	5570	9.61	9.47	2937	158	238	1.26	-1.21	16.10
15	400	3000	6676	5964	9.27	9.12	2930	167	209	1.09	-1.05	15.52
15	440	3000	7001	6326	8.95	8.78	2923	175	186	.96	-.92	14.97
15	480	3000	7302	6657	8.64	8.47	2916	182	166	.85	-.82	14.44
15	520	3000	7581	6962	8.35	8.16	2909	187	149	.76	-.73	13.94
15	560	3000	7835	7238	8.09	7.89	2902	192	135	.69	-.66	13.48

Table 6-2. (Sheet 6)

MK-82 500LB LDGP BOMB
RIPPLE RELEASE TABLES
FOR
MER-5E BOMB RACK

RELEASE INTERVAL = 100 MILLISECONDS
NUMBER OF RELEASES IN RIPPLE = 5

RELEASE DIVE ANGLE	TAS KTS	ALT ABV TGT FT	SLANT RANGE FT	RANGE REL TO CENTER OF PATTERN FT	TIME OF FALL FIRST BOMB SEC	TIME OF FALL LAST BOMB SEC	REL ALT LAST BOMB FT	PATTERN LENGTH FT	SIGHT DEP FROM FLIGHT PATH MILS	WIND CORRECTION FACTOR HEAD TAIL MILS/KNOTS	WIND CORRECTION FACTOR CROSS FT/KNOTS
15	360	4000	7815	6713	11.65	11.53	3937	167	282	1.34 -1.28	19.57
15	400	4000	8253	7219	11.30	11.16	3930	179	250	1.16 -1.12	18.95
15	440	4000	8667	7689	10.95	10.81	3923	188	223	1.02 -.98	18.37
15	480	4000	9056	8125	10.63	10.47	3916	197	200	.90 -.87	17.80
15	520	4000	9421	8529	10.31	10.14	3909	205	181	.81 -.78	17.26
15	560	4000	9755	8897	10.03	9.85	3902	212	165	.73 -.71	16.77
15	360	5000	9204	7727	13.49	13.38	4937	174	320	1.40 -1.34	22.67
15	400	5000	9720	8335	13.11	12.99	4930	187	285	1.22 -1.17	22.03
15	440	5000	10211	8903	12.76	12.62	4923	198	256	1.07 -1.03	21.42
15	480	5000	10677	9434	12.41	12.27	4916	208	231	.95 -.92	20.83
15	520	5000	11119	9931	12.08	11.93	4909	218	209	.85 -.82	20.27
15	560	5000	11524	10383	11.80	11.63	4902	227	191	.77 -.75	19.77
20	360	2000	4150	3637	6.39	6.19	1917	116	159	1.30 -1.24	10.62
20	400	2000	4318	3927	6.06	5.84	1908	119	137	1.13 -1.08	10.04
20	440	2000	4466	3993	5.75	5.52	1898	120	119	1.00 -.96	9.51
20	480	2000	4597	4139	5.47	5.22	1889	121	104	.89 -.86	9.02
20	520	2000	4712	4267	5.21	4.95	1880	121	92	.81 -.78	8.57
20	560	2000	4813	4378	4.97	4.70	1871	121	82	.73 -.71	8.16
20	360	2500	4960	4284	7.56	7.38	2417	125	184	1.34 -1.29	12.61
20	400	2500	5172	4528	7.20	7.00	2408	130	160	1.17 -1.12	11.98
20	440	2500	5362	4744	6.86	6.64	2398	133	140	1.04 -1.00	11.40
20	480	2500	5532	4935	6.55	6.32	2389	135	123	.93 -.89	10.86
20	520	2500	5684	5105	6.26	6.01	2380	136	110	.83 -.81	10.36
20	560	2500	5819	5254	5.99	5.74	2371	136	98	.76 -.74	9.90
20	360	3000	5728	4880	8.65	8.47	2917	133	207	1.38 -1.32	14.45
20	400	3000	5982	5176	8.26	8.07	2908	138	181	1.21 -1.16	13.78
20	440	3000	6213	5440	7.90	7.70	2898	142	159	1.07 -1.03	13.16
20	480	3000	6421	5677	7.56	7.34	2889	145	141	.95 -.92	12.58
20	520	3000	6609	5888	7.25	7.02	2880	148	126	.86 -.83	12.04
20	560	3000	6776	6076	6.96	6.72	2871	149	113	.78 -.76	11.55
20	360	4000	7175	5956	10.62	10.46	3917	144	248	1.44 -1.39	17.79
20	400	4000	7505	6350	10.20	10.03	3908	151	218	1.26 -1.22	17.07
20	440	4000	7810	6707	9.81	9.62	3898	158	193	1.12 -1.08	16.40
20	480	4000	8089	7031	9.43	9.24	3889	162	172	1.00 -.97	15.75
20	520	4000	8346	7325	9.08	8.87	3880	166	155	.90 -.88	15.15
20	560	4000	8577	7587	8.77	8.54	3871	170	140	.82 -.80	14.61
20	360	5000	8536	6918	12.40	12.26	4917	152	283	1.49 -1.43	20.81
20	400	5000	8933	7403	11.96	11.80	4908	161	251	1.31 -1.26	20.05
20	440	5000	9305	7847	11.54	11.37	4898	169	223	1.16 -1.12	19.33
20	480	5000	9650	8254	11.14	10.96	4889	175	200	1.04 -1.01	18.64
20	520	5000	9971	8626	10.76	10.57	4880	180	180	.94 -.91	18.00
20	560	5000	10259	8958	10.43	10.22	4871	186	164	.86 -.83	17.43
20	360	6000	9837	7795	14.03	13.90	5917	158	314	1.52 -1.47	23.57
20	400	6000	10294	8365	13.57	13.43	5908	168	279	1.34 -1.29	22.79
20	440	6000	10726	8891	13.13	12.98	5898	177	250	1.19 -1.15	22.04
20	480	6000	11131	9376	12.72	12.55	5889	185	225	1.07 -1.04	21.32
20	520	6000	11510	9823	12.32	12.14	5880	192	204	.97 -.94	20.65
20	560	6000	11851	10220	11.99	11.79	5871	198	186	.89 -.86	20.07
30	360	3000	4786	3729	7.17	6.94	2878	93	158	1.63 -1.57	11.91
30	400	3000	4918	3898	6.75	6.50	2865	94	136	1.45 -1.40	11.18
30	440	3000	5034	4042	6.36	6.10	2851	94	119	1.30 -1.25	10.52
30	480	3000	5133	4165	6.02	5.74	2838	93	104	1.17 -1.14	9.92
30	520	3000	5220	4272	5.70	5.41	2824	92	92	1.07 -1.04	9.37
30	560	3000	5295	4363	5.41	5.11	2811	91	81	.99 -.96	8.88

Table 6-2. (Sheet 7)

MK-82 500LB LDGP BOMB
RIPPLE RELEASE TABLES
FOR
MER-5E BOMB RACK

RELEASE INTERVAL = 100 MILLISECONDS
NUMBER OF RELEASES IN RIPPLE = 5

RELEASE DIVE ANGLE	TAS KTS	ALT ABV TGT FT	SLANT RANGE FT	RANGE REL TO CENTER OF PATTERN FT	TIME OF FALL FIRST BOMB SEC	TIME OF FALL LAST BOMB SEC	REL ALT LAST BOMB FT	PATTERN LENGTH FT	SIGHT DEP FROM FLIGHT PATH MILS	WIND CORRECTION FACTOR HEAD MILS/KNOTS	WIND CORRECTION FACTOR TAIL MILS/KNOTS	WIND CORRECTION FACTOR CROSS FT/KNOTS
30	360	3500	5466	4199	8.10	7.88	3378	99	176	1.65	-1.59	13.48
30	400	3500	5624	4403	7.65	7.41	3365	101	152	1.46	-1.41	12.70
30	440	3500	5763	4579	7.23	6.98	3351	102	133	1.32	-1.27	11.99
30	480	3500	5885	4731	6.85	6.58	3338	102	117	1.19	-1.16	11.34
30	520	3500	5991	4863	6.50	6.22	3324	101	103	1.09	-1.06	10.74
30	560	3500	6084	4976	6.20	5.90	3311	100	92	1.00	-.97	10.21
30	360	4000	6130	4645	6.98	8.77	3878	105	192	1.66	-1.60	14.98
30	400	4000	6312	4883	8.50	8.28	3865	107	167	1.48	-1.43	14.16
30	440	4000	6474	5091	8.06	7.82	3851	108	146	1.33	-1.29	13.40
30	480	4000	6618	5272	7.66	7.40	3838	109	129	1.21	-1.17	12.71
30	520	4000	6744	5430	7.29	7.01	3824	109	114	1.10	-1.07	12.07
30	560	4000	6855	5566	6.96	6.67	3811	108	102	1.02	-.99	11.50
30	360	4500	6779	5070	9.83	9.63	4378	110	207	1.67	-1.62	16.42
30	400	4500	6985	5343	9.33	9.11	4365	113	181	1.49	-1.44	15.56
30	440	4500	7170	5582	8.86	8.63	4351	114	159	1.34	-1.30	14.76
30	480	4500	7334	5792	8.43	8.19	4338	115	141	1.22	-1.18	14.03
30	520	4500	7481	5976	8.04	7.78	4324	116	125	1.11	-1.08	13.35
30	560	4500	7609	6135	7.69	7.42	4311	116	112	1.03	-1.00	12.75
30	360	5000	7415	5476	10.64	10.45	4878	114	222	1.68	-1.63	17.80
30	400	5000	7645	5783	10.12	9.91	4865	117	194	1.50	-1.45	16.90
30	440	5000	7851	6053	9.64	9.41	4851	120	171	1.35	-1.31	16.07
30	480	5000	8037	6292	9.19	8.95	4838	121	152	1.23	-1.19	15.30
30	520	5000	8203	6503	8.77	8.52	4824	122	135	1.12	-1.09	14.59
30	560	5000	8348	6685	8.41	8.14	4811	123	122	1.04	-1.01	13.97
30	360	6000	8658	6242	12.18	12.00	5878	121	248	1.70	-1.64	20.41
30	400	6000	8931	6615	11.63	11.43	5865	125	218	1.52	-1.47	19.46
30	440	6000	9179	6947	11.11	10.89	5851	129	193	1.37	-1.33	18.57
30	480	6000	9405	7243	10.62	10.40	5838	132	172	1.25	-1.21	17.74
30	520	6000	9610	7506	10.18	9.94	5824	133	154	1.14	-1.11	16.98
30	560	6000	9788	7734	9.80	9.54	5811	135	140	1.06	-1.03	16.32
30	360	7000	9868	6956	13.62	13.45	6878	127	271	1.71	-1.65	22.85
30	400	7000	10180	7392	13.04	12.86	6865	132	240	1.53	-1.48	21.86
30	440	7000	10468	7784	12.50	12.29	6851	137	214	1.39	-1.34	20.92
30	480	7000	10733	8136	11.99	11.77	6838	140	191	1.26	-1.23	20.05
30	520	7000	10973	8451	11.52	11.29	6824	143	172	1.16	-1.13	19.25
30	560	7000	11183	8721	11.13	10.88	6811	146	156	1.08	-1.05	18.58
30	360	8000	11052	7626	14.99	14.83	7878	131	292	1.71	-1.66	25.16
30	400	8000	11401	8124	14.38	14.21	7865	138	260	1.54	-1.49	24.13
30	440	8000	11726	8574	13.82	13.62	7851	143	232	1.40	-1.36	23.16
30	480	8000	12027	8980	13.28	13.08	7838	147	209	1.27	-1.24	22.25
30	520	8000	12301	9345	12.81	12.58	7824	151	189	1.17	-1.14	21.43
30	560	8000	12540	9657	12.41	12.17	7811	155	172	1.09	-1.06	20.74
45	360	5000	6227	3711	8.85	8.60	4828	71	151	1.97	-1.91	14.72
45	400	5000	6321	3866	8.29	8.03	4809	71	131	1.79	-1.74	13.77
45	440	5000	6402	3998	7.79	7.51	4790	70	114	1.63	-1.59	12.92
45	480	5000	6472	4110	7.34	7.05	4771	69	100	1.50	-1.47	12.15
45	520	5000	6533	4205	6.94	6.63	4752	68	89	1.39	-1.36	11.46
45	560	5000	6585	4285	6.59	6.27	4733	67	79	1.29	-1.27	10.86
45	360	6000	7371	4282	10.25	10.01	5828	77	170	1.96	-1.90	17.10
45	400	6000	7487	4478	9.64	9.39	5809	78	148	1.78	-1.73	16.06
45	440	6000	7589	4646	9.09	8.83	5790	78	130	1.63	-1.59	15.12
45	480	6000	7678	4790	8.60	8.31	5771	77	115	1.50	-1.47	14.27
45	520	6000	7756	4914	8.15	7.85	5752	76	102	1.39	-1.36	13.50
45	560	6000	7822	5018	7.77	7.46	5733	76	91	1.30	-1.27	12.85

Table 6-2. (Sheet 8)

MK-82 500LB LDGP BOMB
RIPPLE RELEASE TABLES
FOR
MER-5E BOMB RACK

RELEASE INTERVAL = 100 MILLISECONDS
NUMBER OF RELEASES IN RIPPLE = 5

RELEASE				RANGE REL TO CENTER OF PATTERN	TIME OF FALL		REL ALT		SIGHT DEP FROM	WIND CORRECTION FACTOR	
DIVE ANGLE	TAS KTS	ALT ABV TGT FT	SLANT RANGE FT	FT	FIRST BOMB SEC	LAST BOMB SEC	LAST BOMB FT	PATTERN LENGTH FT	FLIGHT PATH MILS	HEAD TAIL MILS/KNOTS	CROSS FT/KNOTS
45	360	7000	8499	4820	11.57	11.35	6828	82	187	1.94 -1.89	19.35
45	400	7000	8635	5057	10.93	10.69	6809	83	164	1.77 -1.73	18.24
45	440	7000	8757	5261	10.34	10.08	6790	84	144	1.63 -1.59	17.23
45	480	7000	8864	5438	9.80	9.53	6771	84	128	1.50 -1.47	16.31
45	520	7000	8959	5591	9.32	9.03	6752	84	114	1.39 -1.36	15.48
45	560	7000	9039	5719	8.91	8.61	6733	84	103	1.31 -1.28	14.78
45	360	8000	9613	5329	12.84	12.63	7828	86	202	1.92 -1.88	21.49
45	400	8000	9769	5607	12.16	11.93	7809	88	178	1.76 -1.72	20.32
45	440	8000	9910	5848	11.53	11.28	7790	90	158	1.62 -1.58	19.25
45	480	8000	10035	6058	10.96	10.69	7771	90	141	1.50 -1.47	18.27
45	520	8000	10146	6240	10.45	10.17	7752	90	126	1.40 -1.37	17.40
45	560	8000	10240	6393	10.03	9.73	7733	91	114	1.31 -1.29	16.67
45	360	9000	10715	5815	14.05	13.85	8828	90	217	1.91 -1.86	23.55
45	400	9000	10890	6132	13.34	13.11	8809	93	192	1.75 -1.71	22.32
45	440	9000	11049	6410	12.68	12.44	8790	94	170	1.61 -1.58	21.20
45	480	9000	11192	6653	12.08	11.82	8771	96	152	1.50 -1.46	20.17
45	520	9000	11319	6864	11.55	11.28	8752	96	137	1.40 -1.37	19.27
45	560	9000	11427	7040	11.12	10.83	8733	97	124	1.32 -1.29	18.52
45	360	10000	11808	6279	15.22	15.02	9828	94	230	1.89 -1.85	25.52
45	400	10000	12001	6636	14.47	14.26	9809	97	204	1.74 -1.70	24.25
45	440	10000	12178	6949	13.79	13.56	9790	99	182	1.61 -1.57	23.08
45	480	10000	12337	7225	13.17	12.92	9771	100	163	1.49 -1.46	22.02
45	520	10000	12479	7465	12.63	12.37	9752	102	147	1.40 -1.37	21.09
45	560	10000	12599	7664	12.18	11.90	9733	104	135	1.32 -1.29	20.33
60	360	9000	9722	3676	12.64	12.40	8790	55	139	2.07 -2.04	21.13
60	400	9000	9788	3848	11.89	11.64	8766	56	123	1.92 -1.89	19.86
60	440	9000	9847	3996	11.22	10.95	8743	56	108	1.79 -1.76	18.70
60	480	9000	9899	4122	10.61	10.33	8719	55	97	1.67 -1.64	17.67
60	520	9000	9944	4229	10.09	9.78	8696	55	87	1.57 -1.55	16.77
60	560	9000	9982	4318	9.65	9.33	8673	55	78	1.49 -1.47	16.02
60	360	10000	10765	3986	13.74	13.51	9790	57	148	2.04 -2.01	23.00
60	400	10000	10839	4182	12.96	12.71	9766	58	131	1.90 -1.87	21.66
60	440	10000	10905	4351	12.25	11.99	9743	59	116	1.77 -1.74	20.46
60	480	10000	10964	4496	11.62	11.34	9719	59	104	1.66 -1.63	19.38
60	520	10000	11015	4619	11.07	10.78	9696	59	93	1.56 -1.54	18.44
60	560	10000	11058	4721	10.62	10.30	9673	59	85	1.48 -1.46	17.66
60	360	11000	11805	4285	14.81	14.58	10790	60	156	2.01 -1.98	24.80
60	400	11000	11886	4504	14.00	13.76	10766	61	138	1.87 -1.85	23.42
60	440	11000	11960	4694	13.26	13.00	10743	62	123	1.75 -1.73	22.17
60	480	11000	12025	4857	12.61	12.33	10719	62	110	1.65 -1.62	21.05
60	520	11000	12082	4997	12.05	11.75	10696	62	100	1.56 -1.53	20.08
60	560	11000	12130	5112	11.58	11.27	10673	63	91	1.48 -1.46	19.28
60	360	12000	12842	4574	15.84	15.63	11790	62	163	1.99 -1.96	26.56
60	400	12000	12930	4816	15.01	14.77	11766	63	145	1.85 -1.83	25.13
60	440	12000	13010	5026	14.25	14.00	11743	64	130	1.74 -1.71	23.84
60	480	12000	13082	5209	13.58	13.31	11719	65	117	1.63 -1.61	22.69
60	520	12000	13144	5363	13.00	12.71	11696	66	106	1.55 -1.53	21.70
60	560	12000	13197	5491	12.52	12.22	11673	66	97	1.48 -1.46	20.88

Table 6-2. (Sheet 9)

MK-82 500LB LDGP BOMB
RIPPLE RELEASE TABLES
FOR
MER-5E BOMB RACK

RELEASE INTERVAL = 140 MILLISECONDS
NUMBER OF RELEASES IN RIPPLE = 5

RELEASE DIVE ANGLE	RELEASE TAS KTS	RELEASE ALT ABV TGT FT	SLANT RANGE FT	RANGE REL TO CENTER OF PATTERN FT	TIME OF FALL FIRST BOMB SEC	TIME OF FALL LAST BOMB SEC	REL ALT LAST BOMB FT	PATTERN LENGTH FT	SIGHT DEP FROM FLIGHT PATH MILS	WIND CORRECTION FACTOR HEAD MILS/KNOTS	WIND CORRECTION FACTOR TAIL MILS/KNOTS	WIND CORRECTION FACTOR CROSS FT/KNOTS
10	360	1000	3307	3152	5.17	4.95	941	208	137	.83	-.79	8.54
10	400	1000	3503	3357	4.96	4.72	934	218	119	.70	-.67	8.17
10	440	1000	3681	3543	4.77	4.51	928	226	104	.61	-.58	7.83
10	480	1000	3843	3711	4.58	4.30	921	232	92	.53	-.51	7.50
10	520	1000	3990	3863	4.41	4.11	915	237	82	.47	-.46	7.19
10	560	1000	4123	4000	4.24	3.93	908	241	73	.42	-.41	6.90
10	360	1500	4395	4131	6.84	6.66	1441	229	179	.93	-.89	11.39
10	400	1500	4677	4430	6.61	6.41	1434	243	157	.79	-.76	10.99
10	440	1500	4938	4705	6.39	6.17	1428	255	138	.68	-.66	10.60
10	480	1500	5180	4958	6.18	5.94	1421	266	123	.60	-.58	10.23
10	520	1500	5404	5192	5.98	5.73	1415	274	110	.53	-.51	9.88
10	560	1500	5610	5406	5.79	5.52	1408	282	99	.48	-.46	9.55
10	360	2000	5355	4967	8.28	8.12	1941	243	214	1.02	-.97	13.84
10	400	2000	5711	5349	8.04	7.86	1934	259	188	.86	-.83	13.42
10	440	2000	6045	5705	7.80	7.61	1928	274	167	.75	-.72	13.01
10	480	2000	6358	6036	7.58	7.37	1921	287	149	.65	-.63	12.61
10	520	2000	6652	6344	7.36	7.14	1915	299	134	.58	-.56	12.24
10	560	2000	6924	6629	7.16	6.92	1908	309	122	.52	-.50	11.88
10	360	2500	6232	5709	9.57	9.42	2441	252	244	1.08	-1.03	16.03
10	400	2500	6653	6165	9.32	9.15	2434	271	216	.92	-.88	15.59
10	440	2500	7052	6594	9.07	8.90	2428	287	193	.80	-.77	15.16
10	480	2500	7429	6996	8.84	8.65	2421	303	173	.70	-.67	14.75
10	520	2500	7786	7373	8.61	8.40	2415	317	156	.62	-.60	14.36
10	560	2500	8118	7724	8.40	8.18	2408	330	142	.55	-.53	13.99
10	360	3000	7051	6381	10.74	10.61	2941	259	271	1.14	-1.09	18.02
10	400	3000	7530	6906	10.48	10.34	2934	279	241	.97	-.93	17.57
10	440	3000	7987	7402	10.23	10.07	2928	298	216	.84	-.81	17.14
10	480	3000	8423	7870	9.99	9.81	2921	315	194	.74	-.71	16.71
10	520	3000	8836	8312	9.75	9.57	2915	330	176	.65	-.63	16.30
10	560	3000	9224	8723	9.54	9.33	2908	345	161	.58	-.57	15.92
15	360	1500	3789	3480	5.88	5.62	1412	182	150	1.07	-1.02	9.70
15	400	1500	3974	3680	5.60	5.32	1402	188	129	.92	-.88	9.22
15	440	1500	4139	3858	5.34	5.04	1392	193	113	.80	-.77	8.76
15	480	1500	4286	4015	5.10	4.78	1383	196	99	.71	-.69	8.34
15	520	1500	4418	4155	4.88	4.54	1373	197	88	.64	-.62	7.95
15	560	1500	4534	4279	4.67	4.32	1363	198	78	.58	-.56	7.59
15	360	2000	4708	4262	7.24	7.01	1912	199	182	1.14	-1.09	12.03
15	400	2000	4953	4531	6.94	6.69	1902	208	158	.98	-.94	11.50
15	440	2000	5176	4774	6.65	6.38	1892	215	139	.86	-.83	11.00
15	480	2000	5378	4993	6.38	6.09	1883	220	123	.76	-.73	10.53
15	520	2000	5562	5190	6.13	5.82	1873	225	109	.68	-.66	10.09
15	560	2000	5727	5366	5.90	5.57	1863	228	98	.62	-.60	9.68
15	360	2500	5556	4962	8.47	8.26	2412	211	210	1.20	-1.15	14.13
15	400	2500	5857	5297	8.15	7.92	2402	222	184	1.03	-.99	13.57
15	440	2500	6134	5601	7.85	7.60	2392	232	162	.90	-.87	13.03
15	480	2500	6388	5879	7.56	7.29	2383	239	144	.80	-.77	12.53
15	520	2500	6621	6131	7.28	7.00	2373	245	129	.72	-.69	12.05
15	560	2500	6832	6358	7.03	6.73	2363	250	116	.65	-.63	11.61
15	360	3000	6354	5601	9.61	9.41	2912	221	236	1.25	-1.19	16.05
15	400	3000	6706	5997	9.27	9.06	2902	233	207	1.08	-1.04	15.47
15	440	3000	7033	6361	8.95	8.72	2892	245	183	.94	-.91	14.91
15	480	3000	7335	6694	8.64	8.40	2883	254	164	.84	-.81	14.38
15	520	3000	7615	6999	8.35	8.09	2873	262	147	.75	-.72	13.88
15	560	3000	7870	7276	8.09	7.80	2863	269	133	.68	-.65	13.41

Table 6-2. (Sheet 10)

MK-82 500LB LDGP BOMB
RIPPLE RELEASE TABLES
FOR
MER-5E BOMB RACK

RELEASE INTERVAL = 140 MILLISECONDS
NUMBER OF RELEASES IN RIPPLE = 5

RELEASE DIVE ANGLE	RELEASE TAS KTS	RELEASE ALT ABV TGT FT	SLANT RANGE FT	RANGE REL TO CENTER OF PATTERN FT	TIME OF FALL FIRST BOMB SEC	TIME OF FALL LAST BOMB SEC	REL ALT LAST BOMB FT	PATTERN LENGTH FT	SIGHT DEP FROM FLIGHT PATH MILS	WIND CORRECTION FACTOR HEAD MILS/KNOTS	WIND CORRECTION FACTOR TAIL MILS/KNOTS	WIND CORRECTION FACTOR CROSS FT/KNOTS
15	360	4000	7843	6747	11.65	11.48	3912	234	280	1.33	-1.27	19.53
15	400	4000	8285	7255	11.30	11.11	3902	250	248	1.15	-1.11	18.91
15	440	4000	8701	7727	10.95	10.75	3892	264	221	1.01	-.97	18.32
15	480	4000	9091	8164	10.63	10.40	3883	276	198	.89	-.86	17.75
15	520	4000	9458	8570	10.31	10.07	3873	287	179	.80	-.77	17.20
15	560	4000	9794	8940	10.03	9.77	3863	297	163	.72	-.70	16.71
15	360	5000	9233	7762	13.49	13.33	4912	244	317	1.39	-1.33	22.63
15	400	5000	9752	8372	13.11	12.94	4902	261	283	1.21	-1.16	21.99
15	440	5000	10245	8943	12.76	12.57	4892	277	254	1.06	-1.02	21.38
15	480	5000	10714	9476	12.41	12.21	4883	292	229	.94	-.91	20.78
15	520	5000	11158	9975	12.08	11.87	4873	305	207	.84	-.82	20.21
15	560	5000	11565	10428	11.80	11.56	4863	317	189	.76	-.74	19.71
20	360	2000	4170	3659	6.39	6.11	1884	162	156	1.27	-1.22	10.55
20	400	2000	4339	3850	6.06	5.75	1871	165	134	1.11	-1.07	9.97
20	440	2000	4487	4017	5.75	5.42	1858	168	117	.98	-.94	9.43
20	480	2000	4618	4163	5.47	5.12	1845	169	102	.88	-.85	8.94
20	520	2000	4734	4290	5.21	4.84	1832	168	90	.79	-.76	8.48
20	560	2000	4835	4402	4.97	4.58	1819	168	80	.72	-.70	8.07
20	360	2500	4981	4309	7.56	7.30	2384	175	182	1.32	-1.27	12.54
20	400	2500	5195	4554	7.20	6.91	2371	181	157	1.15	-1.11	11.91
20	440	2500	5386	4770	6.86	6.56	2358	185	138	1.02	-.98	11.33
20	480	2500	5556	4962	6.55	6.22	2345	188	121	.91	-.88	10.78
20	520	2500	5708	5132	6.26	5.91	2332	189	107	.82	-.79	10.27
20	560	2500	5843	5281	5.99	5.63	2319	190	96	.75	-.73	9.81
20	360	3000	5751	4906	8.65	8.40	2884	186	205	1.37	-1.31	14.39
20	400	3000	6006	5203	8.26	7.99	2871	193	179	1.19	-1.15	13.72
20	440	3000	6237	5469	7.90	7.61	2858	199	157	1.05	-1.02	13.09
20	480	3000	6446	5706	7.56	7.26	2845	203	139	.94	-.91	12.51
20	520	3000	6635	5918	7.25	6.92	2832	206	123	.85	-.82	11.96
20	560	3000	6803	6105	6.96	6.62	2819	208	111	.77	-.75	11.46
20	360	4000	7199	5985	10.62	10.40	3884	202	246	1.43	-1.37	17.74
20	400	4000	7531	6381	10.20	9.96	3871	212	216	1.25	-1.20	17.02
20	440	4000	7837	6739	9.81	9.55	3858	220	191	1.11	-1.07	16.33
20	480	4000	8118	7064	9.43	9.16	3845	227	170	.99	-.96	15.69
20	520	4000	8375	7358	9.08	8.79	3832	232	153	.89	-.87	15.08
20	560	4000	8606	7620	8.77	8.45	3819	237	138	.81	-.79	14.53
20	360	5000	8561	6949	12.40	12.20	4884	213	281	1.48	-1.42	20.76
20	400	5000	8960	7435	11.96	11.74	4871	225	249	1.30	-1.25	20.00
20	440	5000	9333	7881	11.54	11.30	4858	236	221	1.15	-1.11	19.27
20	480	5000	9680	8289	11.14	10.88	4845	245	198	1.03	-1.00	18.58
20	520	5000	10002	8662	10.76	10.49	4832	252	179	.93	-.90	17.93
20	560	5000	10291	8995	10.43	10.14	4819	259	162	.85	-.83	17.36
20	360	6000	9862	7826	14.03	13.85	5884	222	312	1.51	-1.46	23.53
20	400	6000	10321	8398	13.57	13.37	5871	236	277	1.33	-1.29	22.74
20	440	6000	10755	8926	13.13	12.91	5858	248	248	1.19	-1.15	21.98
20	480	6000	11162	9413	12.72	12.48	5845	259	223	1.06	-1.03	21.26
20	520	6000	11543	9861	12.32	12.07	5832	268	202	.96	-.93	20.58
20	560	6000	11885	10260	11.99	11.71	5819	277	184	.88	-.86	20.00
30	360	3000	4800	3747	7.17	6.84	2830	130	156	1.61	-1.55	11.83
30	400	3000	4933	3916	6.75	6.40	2811	131	134	1.43	-1.38	11.10
30	440	3000	5048	4060	6.36	5.99	2792	131	116	1.28	-1.24	10.43
30	480	3000	5148	4184	6.02	5.62	2773	130	102	1.16	-1.12	9.82
30	520	3000	5235	4290	5.70	5.29	2754	128	90	1.05	-1.02	9.27
30	560	3000	5310	4381	5.41	4.99	2735	126	80	.97	-.94	8.78

Table 6-2. (Sheet 11)

MK-82 500LB LDGP BOMB
RIPPLE RELEASE TABLES
FOR
MER-5E BOMB RACK

RELEASE INTERVAL = 140 MILLISECONDS
NUMBER OF RELEASES IN RIPPLE = 5

DIVE ANGLE	RELEASE TAS KTS	RELEASE ALT ABV TGT FT	SLANT RANGE FT	RANGE REL TO CENTER OF PATTERN FT	TIME OF FALL FIRST BOMB SEC	TIME OF FALL LAST BOMB SEC	REL ALT LAST BOMB FT	PATTERN LENGTH FT	SIGHT DEP FROM FLIGHT PATH MILS	WIND CORRECTION FACTOR HEAD TAIL MILS/KNOTS	WIND CORRECTION FACTOR CROSS FT/KNOTS
30	360	3500	5482	4219	8.10	7.79	3330	139	174	1.63 -1.57	13.41
30	400	3500	5640	4423	7.65	7.31	3311	141	150	1.45 -1.40	12.62
30	440	3500	5779	4599	7.23	6.88	3292	142	131	1.30 -1.26	11.91
30	480	3500	5901	4751	6.85	6.48	3273	141	115	1.18 -1.14	11.25
30	520	3500	6008	4883	6.50	6.11	3254	140	101	1.07 -1.04	10.65
30	560	3500	6100	4996	6.20	5.79	3235	139	90	.99 -.96	10.11
30	360	4000	6146	4666	8.98	8.69	3830	146	190	1.65 -1.59	14.91
30	400	4000	6329	4905	8.50	8.18	3811	150	165	1.46 -1.41	14.08
30	440	4000	6491	5112	8.06	7.72	3792	151	144	1.31 -1.27	13.32
30	480	4000	6635	5293	7.66	7.30	3773	152	127	1.19 -1.16	12.62
30	520	4000	6762	5452	7.29	6.90	3754	152	113	1.09 -1.06	11.98
30	560	4000	6872	5588	6.96	6.56	3735	151	101	1.00 -.98	11.41
30	360	4500	6795	5091	9.83	9.54	4330	153	205	1.66 -1.60	16.35
30	400	4500	7002	5365	9.33	9.02	4311	157	179	1.48 -1.43	15.48
30	440	4500	7187	5604	8.86	8.53	4292	160	157	1.33 -1.29	14.68
30	480	4500	7352	5814	8.43	8.09	4273	161	139	1.20 -1.17	13.94
30	520	4500	7499	5999	8.04	7.67	4254	161	123	1.10 -1.07	13.26
30	560	4500	7627	6158	7.69	7.31	4235	162	110	1.01 -.99	12.66
30	360	5000	7432	5499	10.64	10.37	4830	159	220	1.67 -1.61	17.73
30	400	5000	7662	5806	10.12	9.82	4811	164	192	1.49 -1.44	16.83
30	440	5000	7870	6077	9.64	9.32	4792	167	169	1.34 -1.30	16.00
30	480	5000	8056	6316	9.19	8.85	4773	169	150	1.22 -1.18	15.22
30	520	5000	8222	6527	8.77	8.42	4754	170	133	1.11 -1.08	14.51
30	560	5000	8368	6710	8.41	8.04	4735	171	120	1.03 -1.00	13.88
30	360	6000	8675	6266	12.18	11.93	5830	169	246	1.69 -1.63	20.34
30	400	6000	8949	6640	11.63	11.35	5811	175	216	1.51 -1.46	19.39
30	440	6000	9199	6972	11.11	10.81	5792	180	191	1.36 -1.32	18.50
30	480	6000	9425	7269	10.62	10.30	5773	184	170	1.24 -1.20	17.66
30	520	6000	9630	7533	10.18	9.84	5754	186	153	1.13 -1.10	16.90
30	560	6000	9809	7760	9.80	9.44	5735	189	138	1.05 -1.02	16.24
30	360	7000	9886	6981	13.62	13.38	6830	177	269	1.70 -1.64	22.79
30	400	7000	10200	7418	13.04	12.78	6811	185	238	1.52 -1.47	21.79
30	440	7000	10489	7811	12.50	12.21	6792	191	212	1.38 -1.34	20.85
30	480	7000	10754	8164	11.99	11.68	6773	196	189	1.25 -1.22	19.97
30	520	7000	10995	8479	11.52	11.20	6754	200	170	1.15 -1.12	19.17
30	560	7000	11206	8750	11.13	10.78	6735	204	155	1.07 -1.04	18.49
30	360	8000	11070	7652	14.99	14.76	7830	184	290	1.70 -1.65	25.11
30	400	8000	11421	8151	14.38	14.14	7811	193	258	1.53 -1.48	24.07
30	440	8000	11747	8602	13.82	13.55	7792	200	231	1.39 -1.35	23.09
30	480	8000	12049	9010	13.28	12.99	7773	206	207	1.27 -1.23	22.18
30	520	8000	12324	9375	12.81	12.49	7754	211	187	1.16 -1.13	21.35
30	560	8000	12564	9688	12.41	12.07	7735	217	170	1.08 -1.06	20.66
45	360	5000	6235	3725	8.85	8.50	4759	98	149	1.95 -1.90	14.64
45	400	5000	6329	3880	8.29	7.92	4733	99	129	1.77 -1.72	13.68
45	440	5000	6411	4012	7.79	7.40	4706	98	112	1.62 -1.58	12.82
45	480	5000	6481	4124	7.34	6.93	4679	96	99	1.48 -1.45	12.05
45	520	5000	6542	4219	6.94	6.51	4652	95	87	1.37 -1.34	11.35
45	560	5000	6594	4299	6.59	6.14	4626	93	78	1.28 -1.25	10.75
45	360	6000	7380	4297	10.25	9.92	5759	107	168	1.94 -1.89	17.02
45	400	6000	7496	4493	9.64	9.29	5733	108	146	1.77 -1.72	15.98
45	440	6000	7598	4661	9.09	8.72	5706	108	128	1.62 -1.58	15.03
45	480	6000	7687	4805	8.60	8.20	5679	108	113	1.49 -1.45	14.17
45	520	6000	7765	4929	8.15	7.73	5652	106	100	1.38 -1.35	13.40
45	560	6000	7831	5033	7.77	7.33	5626	106	90	1.29 -1.26	12.74

Table 6-2. (Sheet 12)

MK-82 500LB LDGP BOMB
RIPPLE RELEASE TABLES
FOR
MER-5E BOMB RACK

RELEASE INTERVAL = 140 MILLISECONDS
NUMBER OF RELEASES IN RIPPLE = 5

RELEASE DIVE ANGLE	RELEASE TAS KTS	RELEASE ALT ABV TGT FT	SLANT RANGE FT	RANGE REL TO CENTER OF PATTERN FT	TIME OF FALL FIRST BOMB SEC	TIME OF FALL LAST BOMB SEC	REL ALT LAST BOMB FT	PATTERN LENGTH FT	SIGHT DEP FROM FLIGHT PATH MILS	WIND CORRECTION FACTOR HEAD TAIL MILS/KNOTS	WIND CORRECTION FACTOR CROSS FT/KNOTS
45	360	7000	8508	4836	11.57	11.26	6759	115	185	1.93 -1.88	19.27
45	400	7000	8645	5073	10.93	10.59	6733	116	162	1.76 -1.72	18.16
45	440	7000	8767	5278	10.34	9.98	6706	117	143	1.61 -1.58	17.14
45	480	7000	8875	5455	9.80	9.42	6679	117	127	1.49 -1.46	16.21
45	520	7000	8969	5608	9.32	8.91	6652	117	113	1.38 -1.35	15.39
45	560	7000	9050	5736	8.91	8.49	6626	117	102	1.30 -1.27	14.68
45	360	8000	9622	5347	12.84	12.54	7759	121	201	1.91 -1.87	21.42
45	400	8000	9779	5624	12.16	11.83	7733	123	177	1.75 -1.71	20.25
45	440	8000	9920	5866	11.53	11.18	7706	125	156	1.61 -1.57	19.17
45	480	8000	10046	6076	10.96	10.59	7679	126	139	1.49 -1.46	18.18
45	520	8000	10157	6258	10.45	10.06	7652	126	125	1.38 -1.36	17.31
45	560	8000	10252	6411	10.03	9.61	7626	127	113	1.30 -1.28	16.57
45	360	9000	10725	5833	14.05	13.77	8759	126	215	1.90 -1.85	23.48
45	400	9000	10901	6150	13.34	13.03	8733	130	190	1.74 -1.70	22.25
45	440	9000	11060	6429	12.68	12.34	8706	132	169	1.60 -1.57	21.12
45	480	9000	11203	6672	12.08	11.72	8679	133	151	1.49 -1.45	20.09
45	520	9000	11330	6883	11.55	11.17	8652	135	136	1.39 -1.36	19.18
45	560	9000	11438	7060	11.12	10.71	8626	136	123	1.31 -1.28	18.42
45	360	10000	11818	6298	15.22	14.94	9759	131	228	1.88 -1.84	25.45
45	400	10000	12012	6655	14.47	14.17	9733	135	203	1.73 -1.69	24.18
45	440	10000	12189	6969	13.79	13.47	9706	138	181	1.60 -1.56	23.00
45	480	10000	12349	7245	13.17	12.82	9679	140	162	1.48 -1.45	21.94
45	520	10000	12491	7485	12.63	12.26	9652	142	146	1.39 -1.36	21.00
45	560	10000	12612	7685	12.18	11.79	9626	145	133	1.31 -1.29	20.23
60	360	9000	9726	3687	12.64	12.30	8705	77	138	2.06 -2.03	21.05
60	400	9000	9793	3859	11.89	11.53	8673	78	121	1.91 -1.88	19.77
60	440	9000	9852	4007	11.22	10.84	8640	78	107	1.78 -1.75	18.61
60	480	9000	9904	4133	10.61	10.21	8607	77	96	1.66 -1.63	17.58
60	520	9000	9949	4240	10.09	9.66	8574	77	86	1.56 -1.54	16.67
60	560	9000	9987	4329	9.65	9.20	8542	77	77	1.48 -1.46	15.91
60	360	10000	10769	3998	13.74	13.42	9705	80	147	2.03 -2.00	22.92
60	400	10000	10844	4194	12.96	12.61	9673	82	130	1.89 -1.86	21.58
60	440	10000	10910	4362	12.25	11.88	9640	82	115	1.76 -1.73	20.37
60	480	10000	10969	4507	11.62	11.23	9607	82	103	1.65 -1.62	19.28
60	520	10000	11020	4630	11.07	10.66	9574	82	92	1.55 -1.53	18.34
60	560	10000	11063	4732	10.62	10.18	9542	82	84	1.47 -1.45	17.55
60	360	11000	11809	4297	14.81	14.50	10705	84	155	2.01 -1.98	24.73
60	400	11000	11891	4516	14.00	13.66	10673	85	137	1.87 -1.84	23.34
60	440	11000	11964	4706	13.26	12.90	10640	86	122	1.74 -1.72	22.08
60	480	11000	12030	4870	12.61	12.22	10607	87	109	1.64 -1.61	20.96
60	520	11000	12087	5009	12.05	11.63	10574	87	99	1.55 -1.52	19.98
60	560	11000	12135	5124	11.58	11.14	10542	88	90	1.47 -1.45	19.17
60	360	12000	12846	4566	15.84	15.54	11705	86	162	1.98 -1.95	26.49
60	400	12000	12935	4828	15.01	14.68	11673	88	144	1.85 -1.82	25.05
60	440	12000	13015	5039	14.25	13.90	11640	90	129	1.73 -1.70	23.75
60	480	12000	13087	5221	13.58	13.20	11607	91	116	1.63 -1.60	22.60
60	520	12000	13149	5376	13.00	12.60	11574	92	105	1.54 -1.52	21.60
60	560	12000	13202	5505	12.52	12.09	11542	93	96	1.47 -1.45	20.77

Table 6-3. (Sheet 1)

LEVEL BOMBING TABLES
FOR

MK-82 (SNAKEYE) - HIGH DRAG
MER-5E RELEASE CONDITIONS

DIVE ANGLE	ALT ABOVE TGT	TAS	BOMB RANGE	TIME OF FLIGHT	SLANT RANGE FROM REL	IMPACT ANGLE	SIGHT DEP FROM FLIGHT PATH	WIND CORRECTION FACTORS HEAD	TAIL	CROSS DRIFT	CRAB
DEG	FT	KTS	FT	SEC	FT	DEG	MILS	MILS/KNOT		FT/KNOT	
0	100	360	1212	2.56	1216	11	89	.33	-.31	4.3	.9
		400	1328	2.58	1332	10	82	.28	-.26	4.4	1.0
		440	1441	2.61	1444	10	75	.24	-.22	4.4	1.1
		480	1549	2.62	1552	9	70	.21	-.20	4.4	1.2
		520	1658	2.65	1661	9	65	.18	-.17	4.5	1.3
		560	1762	2.67	1765	8	61	.16	-.15	4.5	1.4
0	125	360	1332	2.92	1338	13	101	.39	-.36	4.9	1.2
		400	1456	2.95	1462	12	92	.33	-.31	5.0	1.3
		440	1577	2.98	1582	11	85	.28	-.26	5.0	1.4
		480	1692	3.00	1697	11	79	.25	-.23	5.1	1.5
		520	1807	3.03	1811	10	74	.22	-.20	5.1	1.6
		560	1917	3.06	1921	10	70	.19	-.18	5.2	1.7
0	150	360	1437	3.25	1445	15	111	.44	-.41	5.5	1.5
		400	1566	3.28	1573	14	102	.37	-.35	5.5	1.6
		440	1692	3.31	1699	13	94	.32	-.30	5.6	1.7
		480	1814	3.35	1821	13	88	.28	-.27	5.6	1.9
		520	1932	3.37	1938	12	82	.25	-.24	5.7	2.0
		560	2047	3.40	2053	12	78	.23	-.21	5.7	2.1
0	175	360	1526	3.55	1536	16	121	.50	-.46	6.0	1.8
		400	1662	3.59	1672	15	111	.42	-.39	6.1	1.9
		440	1793	3.62	1801	15	103	.37	-.34	6.1	2.0
		480	1920	3.66	1928	14	96	.32	-.30	6.2	2.2
		520	2042	3.70	2049	14	90	.29	-.27	6.2	2.3
		560	2160	3.73	2167	13	85	.26	-.24	6.3	2.4
0	200	360	1607	3.84	1620	18	131	.55	-.51	6.5	2.0
		400	1748	3.88	1760	17	120	.47	-.44	6.6	2.2
		440	1883	3.92	1894	16	112	.41	-.38	6.6	2.3
		480	2013	3.96	2023	16	104	.36	-.34	6.7	2.5
		520	2139	4.00	2149	15	98	.32	-.30	6.8	2.6
		560	2259	4.03	2268	15	93	.29	-.27	6.8	2.8
0	225	360	1681	4.11	1696	20	140	.60	-.55	6.9	2.3
		400	1826	4.16	1839	19	129	.52	-.48	7.0	2.5
		440	1964	4.20	1977	18	120	.45	-.42	7.1	2.6
		480	2097	4.24	2109	17	112	.40	-.37	7.2	2.8
		520	2225	4.28	2237	17	106	.36	-.33	7.2	2.9
		560	2348	4.32	2359	17	100	.32	-.30	7.3	3.1
0	250	360	1748	4.37	1766	21	149	.65	-.60	7.4	2.5
		400	1896	4.42	1913	20	138	.56	-.52	7.5	2.7
		440	2038	4.47	2053	20	128	.49	-.46	7.5	2.9
		480	2173	4.51	2188	19	120	.44	-.41	7.6	3.1
		520	2304	4.55	2317	19	113	.39	-.37	7.7	3.3
		560	2429	4.59	2442	18	107	.35	-.33	7.7	3.4

Table 6-3. (Sheet 2)

LEVEL BOMBING TABLES
FOR

MK-82 (SNAKEYE) - HIGH DRAG
MER-5E RELEASE CONDITIONS

DIVE ANGLE	ALT ABOVE TGT	TAS	BOMB RANGE	TIME OF FLIGHT	SLANT RANGE FROM REL	IMPACT ANGLE	SIGHT DEP FROM FLIGHT PATH	WIND CORRECTION FACTORS HEAD	TAIL	CROSS DRIFT	CROSS CRAB
DEG	FT	KTS	FT	SEC	FT	DEG	MILS	MILS/KNOT		FT/KNOT	
0	275	360	1810	4.62	1831	23	158	.71	-.65	7.8	2.8
		400	1961	4.67	1980	22	146	.61	-.56	7.9	3.0
		440	2105	4.72	2123	21	136	.53	-.49	8.0	3.2
		480	2243	4.77	2260	21	128	.47	-.44	8.0	3.4
		520	2376	4.81	2392	20	120	.43	-.40	8.1	3.5
		560	2503	4.85	2518	20	114	.39	-.36	8.2	3.7
0	300	360	1867	4.86	1891	24	167	.76	-.70	8.2	3.0
		400	2021	4.91	2043	23	154	.65	-.60	8.3	3.2
		440	2168	4.96	2188	23	144	.57	-.53	8.4	3.5
		480	2308	5.01	2327	22	135	.51	-.48	8.5	3.7
		520	2442	5.06	2460	22	128	.46	-.43	8.5	3.8
		560	2571	5.10	2588	21	121	.42	-.39	8.6	4.0
0	400	360	2063	5.73	2101	30	199	.96	-.88	9.7	3.9
		400	2225	5.80	2261	29	185	.84	-.77	9.8	4.2
		440	2379	5.86	2413	28	173	.74	-.68	9.9	4.5
		480	2526	5.91	2557	28	163	.66	-.61	10.0	4.7
		520	2666	5.96	2696	27	155	.60	-.56	10.1	4.9
		560	2799	6.01	2828	27	147	.55	-.51	10.1	5.1
0	500	360	2220	6.52	2276	35	230	1.16	-1.06	11.0	4.8
		400	2389	6.59	2441	34	214	1.02	-.93	11.1	5.1
		440	2548	6.66	2597	34	201	.91	-.83	11.2	5.4
		480	2700	6.72	2745	33	190	.82	-.75	11.3	5.7
		520	2843	6.77	2887	32	180	.74	-.69	11.4	6.0
		560	2980	6.83	3022	32	172	.68	-.63	11.5	6.2
0	600	360	2352	7.24	2428	40	258	1.36	-1.24	12.2	5.7
		400	2526	7.32	2596	39	241	1.20	-1.09	12.3	6.0
		440	2689	7.39	2755	38	227	1.07	-.98	12.5	6.4
		480	2844	7.45	2907	38	215	.97	-.89	12.6	6.7
		520	2991	7.52	3050	37	205	.89	-.82	12.7	6.9
		560	3130	7.57	3187	37	196	.82	-.75	12.8	7.2
0	700	360	2466	7.91	2563	44	286	1.56	-1.41	13.4	6.5
		400	2643	7.99	2734	43	267	1.38	-1.25	13.5	6.9
		440	2810	8.07	2896	42	252	1.24	-1.13	13.6	7.2
		480	2968	8.14	3049	42	239	1.12	-1.03	13.7	7.6
		520	3117	8.21	3194	41	228	1.03	-.95	13.8	7.9
		560	3258	8.26	3333	41	218	.95	-.88	13.9	8.1
0	800	360	2566	8.55	2687	48	312	1.75	-1.58	14.4	7.3
		400	2746	8.63	2860	47	292	1.55	-1.41	14.6	7.7
		440	2916	8.71	3023	46	276	1.40	-1.27	14.7	8.1
		480	3076	8.79	3178	46	262	1.28	-1.16	14.8	8.4
		520	3227	8.85	3324	45	250	1.17	-1.07	14.9	8.7
		560	3370	8.92	3464	45	240	1.08	-1.00	15.0	9.0

Table 6-3. (Sheet 3)

LEVEL BOMBING TABLES
FOR

MK-82 (SNAKEYE) - HIGH DRAG
MER-5E RELEASE CONDITIONS

DIVE ANGLE	ALT ABOVE TGT	TAS	BOMB RANGE	TIME OF FLIGHT	SLANT RANGE FROM REL	IMPACT ANGLE	SIGHT DEP FROM FLIGHT PATH	WIND CORRECTION FACTORS HEAD	TAIL	CROSS DRIFT	CROSS CRAB
DEG	FT	KTS	FT	SEC	FT	DEG	MILS	MILS/KNOT		FT/KNOT	
0	900	360	2654	9.15	2803	51	337	1.93	-1.74	15.4	8.1
		400	2838	9.24	2977	50	316	1.73	-1.56	15.6	8.5
		440	3010	9.33	3141	50	299	1.56	-1.42	15.7	8.9
		480	3171	9.40	3297	49	285	1.43	-1.30	15.9	9.3
		520	3324	9.47	3444	49	272	1.31	-1.20	16.0	9.6
		560	3469	9.54	3584	48	261	1.22	-1.12	16.1	9.9
0	1000	360	2734	9.73	2911	54	361	2.12	-1.90	16.4	8.8
		400	2920	9.82	3087	53	340	1.90	-1.71	16.6	9.3
		440	3094	9.91	3252	53	322	1.72	-1.56	16.7	9.7
		480	3257	9.99	3407	52	307	1.58	-1.43	16.9	10.1
		520	3412	10.06	3555	52	293	1.46	-1.33	17.0	10.4
		560	3558	10.13	3696	51	282	1.35	-1.24	17.1	10.7

Table 6-3. (Sheet 4)

DIVE BOMBING TABLES
FOR

MK-82 (SNAKEYE) - HIGH DRAG
MER-5E RELEASE CONDITIONS

DIVE ANGLE DEG	ALT ABOVE TGT FT	TAS KTS	BOMB RANGE FT	TIME OF FLIGHT SEC	SLANT RANGE FROM REL FT	IMPACT ANGLE DEG	SIGHT DEP FROM FLIGHT PATH MILS	WIND CORRECTION FACTORS HEAD MILS/KNOT	TAIL MILS/KNOT	CROSS FT/KT
10	300	360	1163	2.48	1201	20	85	.95	-.89	4.2
		400	1217	2.35	1254	19	73	.82	-.77	4.0
10	400	360	1412	3.26	1468	24	108	1.11	-1.03	5.5
		400	1488	3.12	1541	22	94	.96	-.90	5.3
		440	1553	2.99	1604	21	83	.85	-.80	5.0
		480	1613	2.87	1662	20	74	.75	-.71	4.8
		520	1667	2.75	1714	19	66	.68	-.64	4.6
		560	1715	2.63	1761	18	59	.61	-.58	4.4
10	500	360	1619	4.00	1695	28	132	1.28	-1.18	6.8
		400	1710	3.87	1782	26	116	1.11	-1.04	6.5
		440	1793	3.74	1861	25	103	.98	-.92	6.3
		480	1868	3.61	1934	23	92	.88	-.82	6.1
		520	1937	3.49	2000	22	83	.79	-.74	5.9
		560	1999	3.37	2061	21	75	.72	-.68	5.7
10	600	360	1794	4.71	1892	32	155	1.45	-1.33	8.0
		400	1899	4.58	1992	30	138	1.26	-1.17	7.7
		440	1995	4.46	2083	28	123	1.12	-1.04	7.5
		480	2083	4.33	2168	27	111	1.00	-.94	7.3
		520	2164	4.21	2246	26	101	.91	-.85	7.1
		560	2239	4.10	2318	25	92	.83	-.78	6.9
10	700	360	1945	5.39	2067	36	178	1.61	-1.49	9.1
		400	2061	5.26	2177	34	159	1.42	-1.31	8.9
		440	2168	5.14	2278	32	144	1.26	-1.17	8.7
		480	2266	5.03	2372	31	131	1.13	-1.06	8.5
		520	2358	4.91	2460	29	119	1.03	-.96	8.3
		560	2443	4.80	2541	28	109	.94	-.88	8.1
10	800	360	2076	6.03	2225	39	201	1.78	-1.64	10.2
		400	2202	5.91	2343	38	181	1.57	-1.45	10.0
		440	2318	5.80	2452	36	164	1.40	-1.30	9.8
		480	2425	5.69	2553	34	150	1.27	-1.18	9.6
		520	2525	5.58	2649	33	138	1.15	-1.08	9.4
		560	2618	5.48	2738	32	127	1.05	-.99	9.2
10	900	400	2326	6.54	2494	41	202	1.73	-1.59	11.0
		440	2449	6.43	2609	39	184	1.55	-1.43	10.9
		480	2564	6.33	2717	38	169	1.40	-1.30	10.7
		520	2671	6.23	2818	37	156	1.28	-1.19	10.5
		560	2771	6.13	2914	35	145	1.17	-1.10	10.3
10	1000	440	2566	7.04	2754	43	204	1.69	-1.56	11.9
		480	2686	6.95	2867	41	188	1.53	-1.42	11.7
		520	2799	6.85	2973	40	175	1.40	-1.30	11.6
		560	2905	6.76	3073	39	163	1.29	-1.20	11.4
10	1100	480	2796	7.54	3005	45	207	1.67	-1.54	12.7
		520	2914	7.45	3115	43	193	1.53	-1.42	12.6
		560	3025	7.36	3219	42	180	1.41	-1.31	12.4

Table 6-3. (Sheet 5)

DIVE BOMBING TABLES
FOR
MK-82 (SNAKEYE) - HIGH DRAG
MER-5E RELEASE CONDITIONS

DIVE ANGLE DEG	ALT ABOVE TGT FT	TAS KTS	BOMB RANGE FT	TIME OF FLIGHT SEC	SLANT RANGE FROM REL FT	IMPACT ANGLE DEG	SIGHT DEP FROM FLIGHT PATH MILS	WIND CORRECTION FACTORS HEAD MILS/KNOT	TAIL MILS/KNOT	CROSS FT/KT
10	1200	520	3017	8.03	3247	46	211	1.66	-1.53	13.6
		560	3132	7.95	3354	45	197	1.53	-1.42	13.4
10	1300	560	3229	8.52	3481	48	215	1.65	-1.53	14.4
20	600	360	1279	3.04	1413	32	96	1.66	-1.56	5.1
20	700	360	1433	3.59	1594	34	112	1.80	-1.68	6.1
		400	1489	3.38	1646	33	96	1.58	-1.48	5.7
		440	1538	3.18	1690	31	83	1.41	-1.33	5.4
20	800	360	1572	4.15	1764	37	128	1.94	-1.80	7.0
		400	1639	3.92	1824	35	111	1.71	-1.60	6.6
		440	1698	3.71	1877	33	97	1.52	-1.43	6.3
		480	1749	3.52	1923	32	85	1.37	-1.29	5.9
20	900	360	1699	4.70	1923	40	145	2.08	-1.93	7.9
		400	1776	4.47	1991	38	126	1.83	-1.71	7.5
		440	1844	4.25	2052	36	111	1.64	-1.54	7.2
		480	1903	4.05	2105	34	98	1.48	-1.39	6.8
		520	1956	3.86	2153	33	87	1.34	-1.27	6.5
20	1000	360	1814	5.24	2072	42	161	2.21	-2.05	8.8
		400	1900	5.01	2147	40	141	1.96	-1.83	8.4
		440	1976	4.79	2215	38	125	1.76	-1.65	8.1
		480	2044	4.58	2276	37	111	1.59	-1.50	7.7
		520	2105	4.38	2331	35	99	1.45	-1.37	7.4
		560	2160	4.20	2380	34	89	1.33	-1.26	7.1
20	1100	360	1919	5.77	2212	45	178	2.35	-2.18	9.7
		400	2014	5.54	2295	43	157	2.09	-1.95	9.4
		440	2098	5.32	2369	41	140	1.88	-1.76	9.0
		480	2174	5.11	2436	39	125	1.71	-1.60	8.6
		520	2242	4.91	2497	38	112	1.56	-1.47	8.3
		560	2303	4.72	2552	36	101	1.43	-1.35	8.0
20	1200	360	2016	6.30	2346	48	195	2.49	-2.30	10.6
		400	2118	6.07	2434	46	173	2.22	-2.07	10.2
		440	2209	5.85	2514	44	154	2.00	-1.87	9.9
		480	2292	5.64	2587	42	139	1.82	-1.70	9.5
		520	2367	5.44	2654	40	125	1.67	-1.56	9.2
		560	2435	5.25	2715	39	113	1.53	-1.44	8.9
20	1300	360	2104	6.82	2473	50	212	2.63	-2.43	11.5
		400	2213	6.59	2567	48	189	2.35	-2.18	11.1
		440	2311	6.37	2652	46	169	2.13	-1.98	10.8
		480	2400	6.17	2730	44	153	1.94	-1.81	10.4
		520	2482	5.96	2801	43	139	1.78	-1.67	10.1
		560	2556	5.77	2868	41	126	1.64	-1.54	9.7
20	1400	400	2301	7.11	2693	50	205	2.48	-2.30	12.0
		440	2405	6.89	2783	49	184	2.25	-2.09	11.6
		480	2500	6.68	2865	47	167	2.05	-1.92	11.3
		520	2587	6.48	2942	45	152	1.89	-1.77	10.9
		560	2667	6.29	3012	44	139	1.74	-1.64	10.6

Table 6-3. (Sheet 6)

DIVE BOMBING TABLES
FOR

MK-82 (SNAKEYE) - HIGH DRAG
MER-5E RELEASE CONDITIONS

DIVE ANGLE DEG	ALT ABOVE TGT FT	TAS KTS	BOMB RANGE FT	TIME OF FLIGHT SEC	SLANT RANGE FROM REL FT	IMPACT ANGLE DEG	SIGHT DEP FROM FLIGHT PATH MILS	WIND CORRECTION FACTORS HEAD MILS/KNOT	TAIL MILS/KNOT	CROSS FT/KT
20	1500	440	2492	7.40	2908	51	199	2.37	-2.20	12.5
		480	2592	7.20	2995	49	182	2.17	-2.02	12.1
		520	2684	7.00	3075	48	166	2.00	-1.87	11.8
		560	2769	6.81	3149	46	153	1.85	-1.73	11.5
20	1600	440	2572	7.90	3029	53	214	2.49	-2.31	13.3
		480	2677	7.70	3118	52	196	2.28	-2.12	13.0
		520	2774	7.51	3202	50	180	2.11	-1.97	12.7
		560	2863	7.32	3280	49	166	1.95	-1.83	12.4
20	1700	480	2755	8.20	3238	54	210	2.40	-2.23	13.8
		520	2857	8.01	3324	52	194	2.22	-2.07	13.5
		560	2951	7.82	3405	51	179	2.06	-1.93	13.2
20	1800	520	2934	8.50	3442	54	208	2.32	-2.16	14.4
		560	3032	8.32	3526	53	193	2.16	-2.02	14.0
20	1900	560	3107	8.81	3642	55	206	2.27	-2.12	14.9
20	2000	560	3177	9.30	3754	57	219	2.37	-2.21	15.7
30	1000	360	1379	3.87	1704	44	110	2.40	-2.26	6.5
30	1100	360	1480	4.32	1844	46	122	2.52	-2.37	7.3
		400	1533	4.04	1887	44	104	2.25	-2.12	6.8
30	1200	360	1574	4.78	1979	48	134	2.64	-2.47	8.1
		400	1634	4.49	2027	46	116	2.36	-2.22	7.6
30	1300	360	1662	5.24	2110	50	146	2.76	-2.58	8.8
		400	1729	4.94	2163	48	127	2.47	-2.32	8.3
		440	1786	4.66	2209	46	111	2.23	-2.10	7.9
30	1400	360	1745	5.70	2237	52	159	2.87	-2.69	9.6
		400	1817	5.39	2294	50	139	2.58	-2.42	9.1
		440	1881	5.11	2345	48	122	2.33	-2.20	8.6
30	1500	360	1822	6.16	2360	54	172	2.99	-2.79	10.4
		400	1901	5.85	2421	51	150	2.69	-2.52	9.9
		440	1970	5.56	2476	49	133	2.44	-2.29	9.4
		480	2031	5.28	2525	48	118	2.23	-2.10	8.9
30	1600	360	1894	6.62	2479	55	185	3.10	-2.89	11.2
		400	1979	6.30	2545	53	162	2.80	-2.62	10.6
		440	2054	6.01	2603	51	144	2.54	-2.39	10.1
		480	2120	5.73	2656	50	128	2.33	-2.19	9.7
30	1700	360	1962	7.08	2596	57	197	3.21	-3.00	11.9
		400	2052	6.76	2665	55	174	2.91	-2.72	11.4
		440	2132	6.46	2727	53	155	2.65	-2.49	10.9
		480	2204	6.18	2783	51	139	2.43	-2.29	10.4
		520	2267	5.91	2834	50	125	2.24	-2.11	10.0

Table 6-3. (Sheet 7)

DIVE BOMBING TABLES
FOR

MK-82 (SNAKEYE) - HIGH DRAG
MER-5E RELEASE CONDITIONS

DIVE ANGLE DEG	ALT ABOVE TGT FT	TAS KTS	BOMB RANGE FT	TIME OF FLIGHT SEC	SLANT RANGE FROM REL FT	IMPACT ANGLE DEG	SIGHT DEP FROM FLIGHT PATH MILS	WIND CORRECTION FACTORS HEAD MILS/KNOT	TAIL MILS/KNOT	CROSS FT/KT
30	1800	360	2025	7.53	2710	59	210	3.32	-3.10	12.7
		400	2121	7.21	2782	57	187	3.01	-2.82	12.2
		440	2206	6.91	2847	55	167	2.75	-2.58	11.7
		480	2282	6.63	2907	53	150	2.53	-2.38	11.2
		520	2351	6.36	2961	52	135	2.33	-2.20	10.7
30	1900	400	2186	7.67	2896	59	199	3.12	-2.92	12.9
		440	2275	7.37	2964	57	178	2.86	-2.68	12.4
		480	2356	7.08	3027	55	161	2.63	-2.47	11.9
		520	2429	6.81	3084	53	145	2.43	-2.29	11.5
		560	2495	6.55	3136	52	132	2.26	-2.13	11.1
30	2000	400	2246	8.12	3008	60	211	3.22	-3.01	13.7
		440	2340	7.82	3079	58	190	2.96	-2.77	13.2
		480	2425	7.53	3144	57	172	2.73	-2.56	12.7
		520	2503	7.26	3204	55	156	2.53	-2.38	12.2
		560	2573	7.00	3259	54	142	2.35	-2.22	11.8
30	2100	440	2402	8.26	3190	60	201	3.06	-2.86	13.9
		480	2491	7.98	3258	58	183	2.83	-2.65	13.5
		520	2572	7.70	3320	57	167	2.62	-2.47	13.0
		560	2646	7.44	3378	55	152	2.45	-2.31	12.6
30	2200	440	2459	8.71	3300	62	213	3.16	-2.95	14.7
		480	2552	8.42	3370	60	194	2.92	-2.74	14.2
		520	2637	8.15	3434	58	177	2.72	-2.56	13.8
		560	2715	7.89	3494	57	163	2.54	-2.39	13.3
30	2300	480	2610	8.87	3479	62	205	3.02	-2.83	15.0
		520	2699	8.60	3546	60	188	2.81	-2.64	14.5
		560	2780	8.33	3608	59	173	2.63	-2.48	14.1
30	2400	480	2665	9.31	3587	63	216	3.11	-2.91	15.7
		520	2757	9.04	3655	62	199	2.90	-2.73	15.3
		560	2841	8.78	3719	60	183	2.72	-2.56	14.8
30	2500	520	2811	9.48	3762	63	209	2.99	-2.81	16.0
		560	2899	9.22	3828	62	194	2.81	-2.64	15.6
30	2600	520	2863	9.92	3868	65	220	3.08	-2.89	16.7
		560	2953	9.66	3935	63	204	2.90	-2.72	16.3
30	2700	560	3005	10.09	4040	65	214	2.98	-2.80	17.0

Table 6-4. (Sheet 1)

MK-82 (SNAKEYE 1) - HIGH DRAG
RIPPLE RELEASE TABLES
FOR
MER-5E BOMB RACK

RELEASE INTERVAL = 275 MILLISECONDS
NUMBER OF RELEASES IN RIPPLE = 5

RELEASE DIVE ANGLE	RELEASE TAS KTS	RELEASE ALT ABV TGT FT	SLANT RANGE FT	RANGE REL TO CENTER OF PATTERN FT	TIME OF FALL FIRST BOMB SEC	TIME OF FALL LAST BOMB SEC	REL ALT LAST BOMB FT	PATTERN LENGTH FT	SIGHT DEP FROM FLIGHT PATH MILS	WIND CORRECTION FACTOR HEAD TAIL MILS/KNOTS	WIND CORRECTION FACTOR CROSS FT/KNOTS
10	360	1200	3005	2755	8.37	7.72	1084	559	244	1.94 -1.79	13.59
10	400	1200	3169	2933	8.28	7.56	1071	614	221	1.72 -1.59	13.37
10	440	1200	3324	3100	8.20	7.39	1058	668	201	1.53 -1.42	13.16
10	480	1200	3471	3257	8.11	7.22	1045	720	184	1.38 -1.28	12.95
10	520	1200	3611	3405	8.03	7.05	1032	771	170	1.25 -1.17	12.73
10	560	1200	3743	3546	7.95	6.87	1019	821	157	1.14 -1.07	12.52
10	360	1400	3230	2911	9.44	8.83	1284	575	282	2.23 -2.04	15.42
10	400	1400	3401	3099	9.36	8.67	1271	634	257	1.98 -1.82	15.23
10	440	1400	3563	3276	9.29	8.52	1258	691	236	1.78 -1.64	15.04
10	480	1400	3717	3443	9.21	8.37	1245	748	218	1.61 -1.49	14.85
10	520	1400	3863	3600	9.14	8.21	1232	803	202	1.47 -1.37	14.65
10	560	1400	4002	3750	9.07	8.06	1219	858	188	1.35 -1.26	14.46
10	360	1600	3438	3043	10.46	9.87	1484	588	319	2.50 -2.29	17.16
10	400	1600	3613	3239	10.39	9.73	1471	648	292	2.24 -2.06	16.99
10	440	1600	3779	3424	10.33	9.60	1458	708	270	2.02 -1.86	16.82
10	480	1600	3937	3598	10.26	9.46	1445	768	251	1.84 -1.70	16.64
10	520	1600	4088	3762	10.19	9.31	1432	826	234	1.68 -1.56	16.47
10	560	1600	4233	3919	10.13	9.17	1419	885	219	1.55 -1.44	16.29
10	360	1800	3633	3156	11.44	10.87	1684	597	353	2.77 -2.53	18.83
10	400	1800	3811	3359	11.38	10.75	1671	659	326	2.49 -2.28	18.68
10	440	1800	3980	3550	11.32	10.62	1658	721	303	2.26 -2.08	18.52
10	480	1800	4141	3730	11.26	10.49	1645	783	283	2.06 -1.90	18.36
10	520	1800	4295	3900	11.20	10.36	1632	844	265	1.90 -1.76	18.20
10	560	1800	4443	4062	11.14	10.23	1619	905	249	1.76 -1.63	18.04
10	360	2000	3821	3255	12.39	11.84	1884	604	387	3.02 -2.75	20.45
10	400	2000	4000	3464	12.34	11.72	1871	668	358	2.73 -2.50	20.31
10	440	2000	4171	3660	12.28	11.60	1858	732	334	2.49 -2.28	20.16
10	480	2000	4333	3844	12.23	11.48	1845	795	313	2.28 -2.10	20.02
10	520	2000	4489	4019	12.17	11.36	1832	858	295	2.11 -1.95	19.87
10	560	2000	4639	4185	12.12	11.24	1819	920	279	1.96 -1.81	19.72
20	360	2200	3658	2922	11.17	10.11	1971	517	305	3.16 -2.92	17.96
20	400	2200	3798	3096	10.97	9.79	1946	565	276	2.85 -2.64	17.52
20	440	2200	3929	3256	10.78	9.47	1921	611	252	2.59 -2.41	17.09
20	480	2200	4054	3405	10.60	9.15	1895	655	231	2.37 -2.21	16.68
20	520	2200	4172	3545	10.42	8.84	1870	698	212	2.18 -2.04	16.27
20	560	2200	4284	3675	10.24	8.54	1844	739	196	2.02 -1.89	15.86
20	360	2400	3853	3014	12.07	11.04	2171	529	332	3.37 -3.11	19.50
20	400	2400	3996	3195	11.88	10.72	2146	580	303	3.06 -2.83	19.08
20	440	2400	4131	3362	11.69	10.41	2121	629	278	2.80 -2.60	18.66
20	480	2400	4259	3518	11.51	10.10	2095	677	257	2.57 -2.39	18.25
20	520	2400	4380	3664	11.34	9.80	2070	723	237	2.37 -2.22	17.86
20	560	2400	4496	3802	11.17	9.51	2044	768	220	2.20 -2.06	17.47
20	360	2600	4043	3096	12.96	11.94	2371	540	359	3.57 -3.30	21.02
20	400	2600	4187	3283	12.77	11.63	2346	593	329	3.26 -3.02	20.60
20	440	2600	4325	3456	12.59	11.33	2321	644	304	2.99 -2.78	20.19
20	480	2600	4455	3618	12.42	11.04	2295	695	282	2.76 -2.57	19.80
20	520	2600	4579	3770	12.25	10.74	2270	744	262	2.56 -2.38	19.41
20	560	2600	4698	3913	12.08	10.45	2244	792	244	2.38 -2.22	19.03
20	360	2800	4229	3170	13.83	12.83	2571	549	384	3.76 -3.47	22.50
20	400	2800	4375	3361	13.65	12.53	2546	603	355	3.45 -3.19	22.09
20	440	2800	4513	3540	13.47	12.24	2521	657	329	3.18 -2.95	21.70
20	480	2800	4645	3707	13.30	11.95	2495	710	306	2.94 -2.73	21.31
20	520	2800	4772	3864	13.14	11.66	2470	761	285	2.74 -2.55	20.93
20	560	2800	4892	4012	12.98	11.38	2444	812	267	2.55 -2.38	20.56

Table 6-4. (Sheet 2)

MK-82 (SNAKEYE 1) - HIGH DRAG
RIPPLE RELEASE TABLES
FOR
MER-5E BOMB RACK

RELEASE INTERVAL = 275 MILLISECONDS
NUMBER OF RELEASES IN RIPPLE = 5

RELEASE DIVE ANGLE	RELEASE TAS KTS	RELEASE ALT ABV TGT FT	SLANT RANGE FT	RANGE REL TO CENTER OF PATTERN FT	TIME OF FALL FIRST BOMB SEC	TIME OF FALL LAST BOMB SEC	REL ALT LAST BOMB FT	PATTERN LENGTH FT	SIGHT DEP FROM FLIGHT PATH MILS	WIND CORRECTION FACTOR HEAD MILS/KNOTS	WIND CORRECTION FACTOR TAIL MILS/KNOTS	WIND CORRECTION FACTOR CROSS FT/KNOTS
20	360	3000	4413	3236	14.69	13.70	2771	556	409	3.94	-3.64	23.96
20	400	3000	4559	3432	14.51	13.41	2746	612	379	3.63	-3.36	23.56
20	440	3000	4698	3615	14.34	13.12	2721	668	352	3.36	-3.11	23.18
20	480	3000	4831	3787	14.17	12.84	2695	722	329	3.12	-2.90	22.80
20	520	3000	4958	3948	14.01	12.56	2670	776	309	2.91	-2.71	22.43
20	560	3000	5081	4100	13.85	12.28	2644	828	290	2.72	-2.54	22.07

ALPHABETICAL INDEX

F-5 34-9(1)

Page

-B-

Bomb Delivery 1-1
Bomb Racks (Orifice Pins) 1-3
Bombing Tables (See Planning Tables) 6-1

-E-

Emergency Procedures 3-1
Emergency Release 3-1

-F-

Firefighting and Evacuation 3-1
Firefighting Criteria 3-1

-G-

GBU-12/B, A/B Laser Guided Bomb .. 1-6
*GBU-12/B, A/B Laser Guided Bomb .. 1-7
*GBU-12/Wire/Lanyard/Cable Installation 1-10

-I-

In-Flight Procedures 2-3
before release 2-3
release 2-3

-L-

Laser-Guided Bomb Delivery 1-1
Loading Capabilities and Station Requirements 1-1

Page

-M-

Mission Description 1-1
*Multiple Ejector Rack, MER-5E 1-4
Multiple Ejector Rack, MER-5E 1-3

-N-

Nonnuclear Weapon Fuzes 1-9
Nonnuclear Weapons 1-6

-P-

Planning Tables 6-1
*MK-82 LDGP, MER-5E, Dive/Ripple Release 6-13
*MK-82 LDGP, MER-5E, Level/Dive Release 6-2
*MK-82 Snakeye I, MER-5E, Dive/Ripple Release 6-32
*MK-82 Snakeye I, MER-5E, Level/Dive Release 6-25
Preflight Procedures 2-1
bomb (GBU-12 LGB) 2-2
MER-5E with bombs 2-2
pylons with stores 2-1

-W-

Weapon Release System 1-2
Weapon Suspension System 1-3
bomb rack (orifice pins) 1-3
multiple ejector rack, MER-5E 1-3

*Indicates figure

☆ U.S. GOVERNMENT PRINTING OFFICE: 1977--0-783-073/1254