T.O. 1C-47-2

TECHNICAL MANUAL
MAINTENANCE INSTRUCTIONS

USAF SERIES

C-47, C-47A, C-47B, C-47D, C-117A, C-117B AND C-117C

AIRCRAFT

PUBLISHED UNDER AUTHORITY OF THE SECRETARY OF THE AIR FORCE

AFLC HAFB, CA

22 OCTOBER 1964
CHANGE 19 - 20 JUNE 1971

oduction for non-military use of the information or illustrations contained in this publication is not permitted without specific
oval of the issuing service The policy for use of Classified Publications is established for the Air Force in AFR 205-1.

nical orders are normally distributed promptly after printing Date(s) shown on the title page (lower right) are for identification only.
is not a distribution date. Processing time sometimes causes distribution to only appear to have been delayed.

INSERT LATEST CHANGED PAGES. DESTROY SUPERSEDED PAGES.

LIST OF EFFECTIVE PAGES

NOTE: The portion of the text affected by the changes is indicated by a vertical line in the outer margins of the page. Changes to illustrations are indicated by miniature pointing hands. Changes to wiring diagrams are indicated by shaded areas.

Dates of issue for original and changed pages are:

Original	0	22 Oct 64	Change	6	1 Oct 67	Change	12	17 Oct 68
Change	1	26 Apr 65	Change	7	7 Dec 67	Change	13	15 Mar 69
Change	2	22 Sep 65	Change	8	23 Jan 68	Change	14	1 Nov 69
Change	3	23 Nov 65	Change	9	10 May 68	Change	15	20 Nov 69
Change	4	28 Apr 66	Change	10	12 Jun 68	Change	16	4 Mar 70
Change	5	9 Aug 67	Change	11	11 Sep 68	Change	17	30 Dec 70
						Change	18	15 Jan 71
						Change	19	20 Jun 71

TOTAL NUMBER OF PAGES IN THIS PUBLICATION IS 1114 CONSISTING OF THE FOLLOWING:

Page No.	Change No.
*Title	19
*A — C	19
i	6 M
ii	17 M
iiA Added	15 M
iiB Blank	15 M
iii	15 M
iv	13
v	0
vi	3
vii — viii	17 M
ix — x	13
XA Added	17 M
XB Blank Added	17 M
xi — xii	17 M
xiii — xv	0 M (13 & 14)
xvi	17 M
xvii — xviii	15
xviiiA	15
xviii B Blank	15
xix — xx	8 M
xxi	0
xxii	14
*xxiii	19
xxiv	17
xxivA Added	17 M
xxivB Blank Added	17 M
xxv	18 M
xxvi	16 M
xxvii — xxviii	17 M
xxviiiA Added	17 M
xxviiiB Blank Added	17 M
*xxix	19
xxx - xxxi	17
*xxxii	19
xxxiii — xl	0

Page No.	Change No.
1-1 — 1-3	0
1-4	10
1-5 — 1-17	0
1-18	10
1-19 — 1-20	0
*1-21 - 1-23	19
1-24 Blank	0
*2-1 - 2-2	18
*2-2A Added	18
*2-2B Blank Added	18
2-3 — 2-11	0
2-12	17 M
2-13 — 2-17	17 M
2-18 — 2-19	3
2-20	0
2-21	5
2-22 — 2-23	0 M (23)
2-24	17 M
2-25	7
2-26	4
2-27	0
2-28	5
2-28A	17 M
2-28B Blank	5 M
2-29	0
2-30	7
2-31 — 2-33	0
2-34	1
2-35	4
2-36	0
2-37 — 2-38	14
2-39	4
2-40 — 2-42	0
2-43 — 2-44	4
2-45	14
2-46	4
2-47	14
2-48	0
2-49	5

Page No.	Change No.
2-50 — 2-53	0
2-54	8
2-55	8
2-56 — 2-70	0
2-70A Added	17 M
2-70B Blank Added	17 M
2-71	17 M
2-72 — 2-77	0
2-78	17 M
2-79	0
2-80	5
2-81	17 M
2-82 — 2-97	0
2-98	17 M
2-98A Added	9 M
2-98B Blank Added	9 M
2-99 — 2-111	0
2-112	16
2-113 — 2-117	0
2-118	10
2-119 — 2-120	0
2-121	1
2-122	0
2-123	17 M
2-124	13
2-125 — 2-132 Added	13
2-133 — 2-140	15
2-140A Added	15
2-140B Blank Added	15
2-141 — 2-146	15
2-146A Added	15
2-146B Blank Added	15
2-147 — 2-150 Added	15
3-1	10
3-2	0
3-3	10

Upon receipt of the second and subsequent changes to this technical order, personnel responsible for maintaining this publication in current status will ascertain that all previous changes have been received and incorporated Action should be taken promptly if the publication is incomplete

* The asterisk indicates pages changed, added, or deleted by the current change.

ADDITIONAL COPIES OF THIS PUBLICATION MAY BE OBTAINED BY USAF ACTIVITIES IN ACCORDANCE WITH T O 00-5-2

USAF

SECTION I

GENERAL AIRPLANE INFORMATION

1-1. THE AIRPLANE

1-2. GENERAL DESCRIPTION. *(See figures 1-3 and 1-4.)* The C-47, C-47A, C-47B and C-47D airplanes are low-wing, two-engine monoplanes of all metal, semimonocoque construction. Their primary function is the transportation of materiel and personnel. Provisions are made to accommodate a crew of five, including the pilot, co-pilot, radio operator, navigator, and flight engineer. On some airplanes there are no provisions for the navigator and flight engineer. Folding benches for 27 passengers are installed along both sides of the main cargo compartment. Propellers and parapack racks may be carried under the fuselage.

1-3. The C-117 airplane is a low-wing, two-engine monoplane of all-metal construction. Its primary function is the transportation of personnel. Its overall span, length, and height are the same as the C-47 airplane. Provisions are made to accommodate a crew of four, consisting of the pilot, co-pilot, radio operator, and the cabin attendant. Twenty-one passenger seats are installed in the cabin, with a buffet at the aft end on the left side. A lavatory compartment is installed at the aft end on the right side and is equipped with a toilet and wash basin. Three baggage compartments are located in the forward area between stations 86 and 177. A fourth baggage compartment is located aft of station 538.

1-4. PRINCIPAL DIMENSIONS AND LEADING PARTICULARS.

(Airplane in level flight position unless otherwise noted.)

1-5. GENERAL.

Span	95 feet
Length	64 feet 5½ inches
Height	14 feet 11½ inches
Height (with tail wheel on the ground)	16 feet 11⅛ inches

1-6. WINGS.

Airfoil section (curve identification)	At root NACA 2215 At tip NACA 2206
Chord at root	170 inches
Chord at tip (wing station 398)	56 inches
Incidence	2 degrees
Dihedral (measured at top of front beam)	5 degrees
Sweepback (outer wing panel at station 123)	15½ degrees

1-7. HORIZONTAL STABILIZER.

Span	26 feet 8 inches
Maximum chord	80.7 inches
Incidence	0 degrees
Dihedral	0 degrees

1-8. FUSELAGE.

Width (maximum)	8 feet 1¼ inches
Height (maximum)	8 feet 8½ inches
Length	64 feet 5½ inches

1-9. AREAS.

Wings (less ailerons)	884.2 square feet
Wings (with flaps extended) (less ailerons)	884.2 square feet
Ailerons (total)	104.7 square feet
Flaps (total)	82.0 square feet
Stabilizers (including elevators)	179.2 square feet
Elevators two (including tabs)	83.4 square feet
Elevator trim tabs (total)	3.6 square feet
Fin	37.9 square feet
Rudder (including tabs)	46.6 square feet
Rudder trim tabs (total)	3.0 square feet
Aileron tab	1.91 square feet

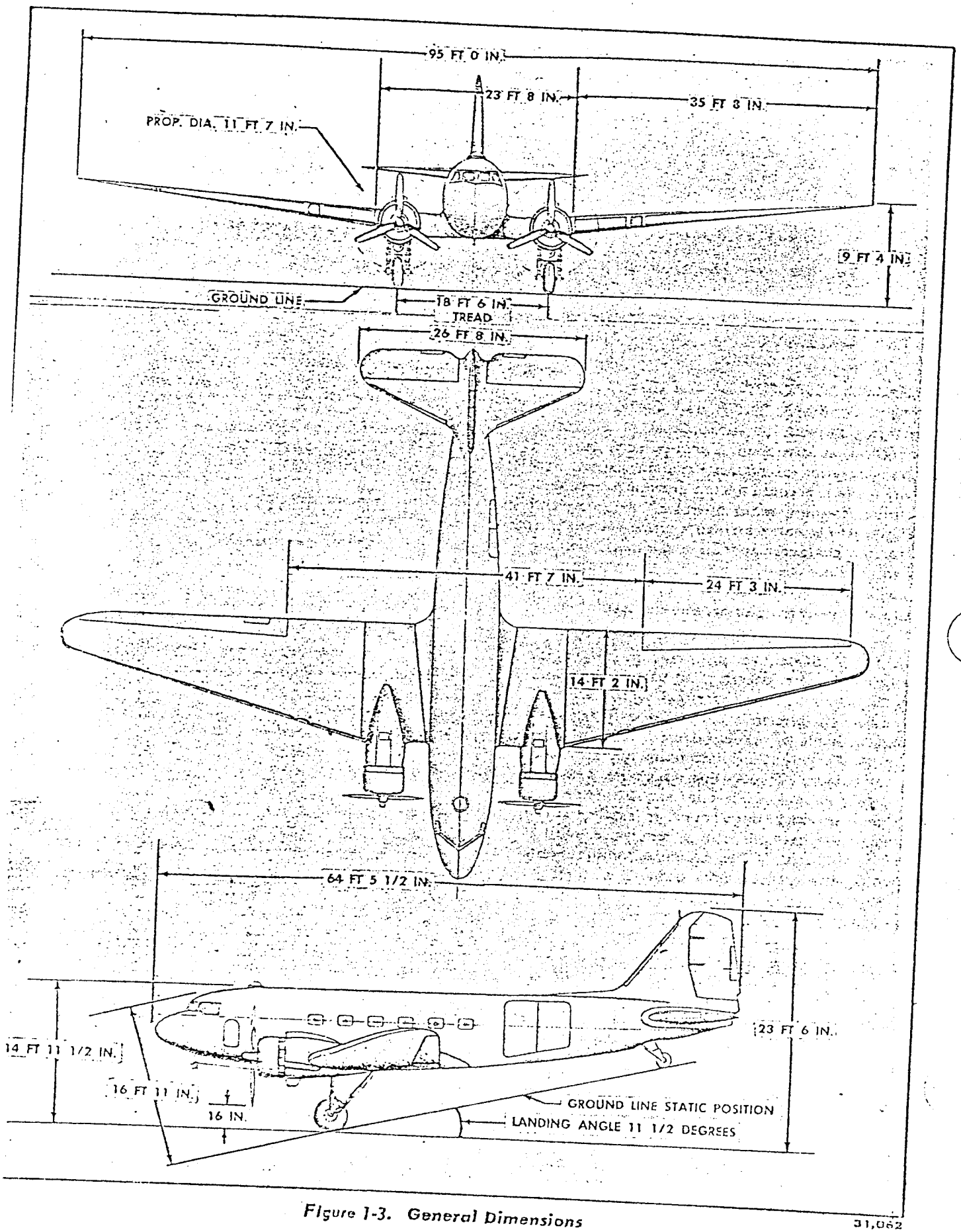

Figure 1-3. General Dimensions

31,062

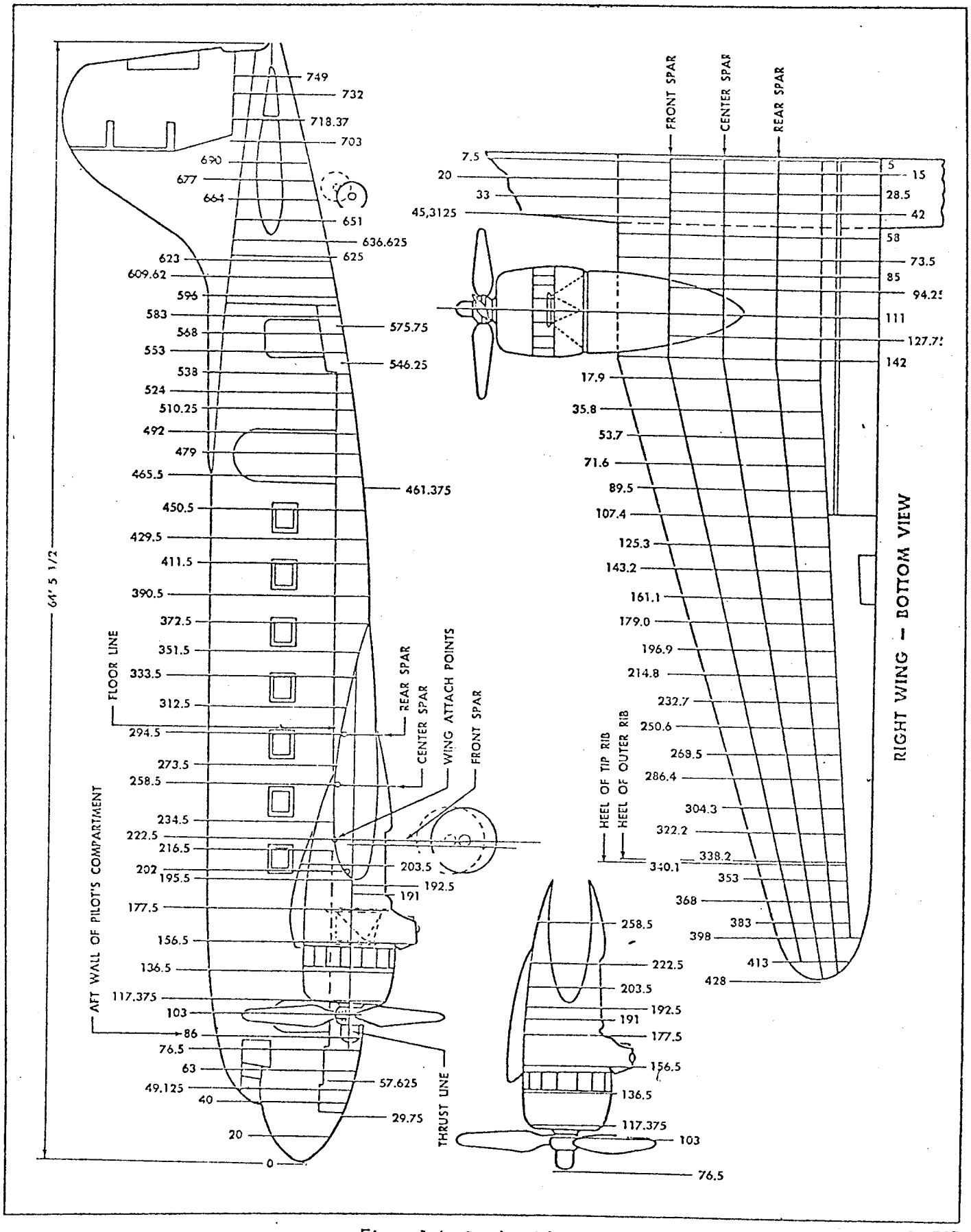

Figure 1-4. Station Diagram

31,059

10. MAIN GEAR.

Type .....Hydraulically actuated, retractable
Tread (width from center of tire to center of tire).....18 feet 6 inches

Shock struts (type) .....Oleopneumatic
Manufacturer .....Bendix
Fluid .....Specification MIL-O-5606
Air pressure .....Must be determined by extension of strut. See Section III.

Wheels
Type .....Bendix B1 or B3, 17:00 x 16 aluminum
Tires .....45 x 17:00 x 16, 10-ply
rakes .....Bendix, duro-servo, 14 x 3, hydraulically actuated

. TAIL WHEEL GEAR.

ype .....Full swiveling, nonretractable
rut type .....Oleopneumatic
Fluid .....Specification MIL-O-5606

heel
Type .....Bendix B-1, 9:00 x 6
Tire .....22 x 9:00 x 6, 8-ply

ENGINES.

umber required .....Two
signation ..... C-117C, C-47 and C-47A: Pratt and Whitney R-1830-92
C-117A and C-47B: Pratt and Whitney R-1830-90C/R-1830-90D
C-47D and C-117: Pratt and Whitney R-1830-90D
peller reduction gear ratio 16:9
.....Specification MIL-L-22851 Grade 1100
l .....Specification MIL-F-5572 Grade 100/130 alternate Grade 115/145

PROPELLERS.

e .....3-bladed, hydromatic, quick feathering, constant-speed control
ufacturer .....Hamilton Standard
neter .....11 feet 7 inches
e angle setting
rrow blades.....18 degrees low, 88 degrees high
ide blades.....16 degrees low, 88 degrees high

1-14. FUEL.

Main tanks	(2)	202 gallons
Auxiliary tanks	(2)	200 gallons
Long range tanks (2 to 8 may be installed)	(8)	100 gallons
Total	(12)	1604 gallons

1-15. OIL.

Nacelle tanks (one for each engine)	(2)	29 gallons
Total		58 gallons
Expansion space		4 gallons

1-16. SETTING AND RANGES OF MOVEMENT OF CONTROL SURFACES.

Stabilizer .....Fixed
Fin .....Fixed
Ailerons
UP travel .....13 (±⅛) inches (27 degrees)
DOWN travel .....8 (±½) inches (18 degrees)
Aileron droop .....(1½ degrees)
Aileron trim tabs
UP travel .....2 (±⅛) inches (12½ degrees)
DOWN travel .....2 (±⅛) inches (12½ degrees)
Flaps (total) .....(45 degrees)
Elevators
UP travel .....12 (±⅛) inches (30 degrees)
DOWN travel .....8 (±⅛) inches (20 degrees)
Elevator trim tabs
UP travel .....1⅝ (±⅛) inches (12 degrees)
DOWN travel .....1⅝ (±⅛) inches (12 degrees)
Rudder
RIGHT travel .....26½ (±¼) inches (29½ |±1| degrees)
LEFT travel .....26½ (±¼) inches (29½ |±1| degrees)
Rudder trim tabs
RIGHT travel.....2¾ (±⅛) inches (12 degrees)
LEFT travel .....2¾ (±⅛) inches (12 degrees)

1-17. ACCESS AND INSPECTION PROVISIONS.

1-18. The airplane is equipped with 164 inspection doors and cover plates. Their purpose is to provide access to various covered parts of the airplane which

require inspection, adjustment, repair, replacement or servicing. Their locations are indicated in figures 1-5 through 1-10 which show the bottom, top, left, and right surfaces of the airplane.

1-19. HOISTING PROVISIONS.

1-20. Provisions are made for hoisting the complete airplane, the fuselage, the outer wing, the horizontal and vertical stabilizers, the rudder, the engine assemblies, and the propellers. Various types of slings are required for hoisting. For further information, refer to Section II.

1-21. JACKING PROVISIONS.

1-22. Both forward and aft sections of the airplane are raised by jacks at points which are protected with jack pads. The forward section of the airplane is raised by using either of the two sets of jacking points. An alternate emergency method of raising a single wheel is also provided. The tail section is raised at one jacking joint. For further information, refer to Section II.

1-23. TOWING.

1-24. Tow the airplane from the front by attaching tow lines to the main wheel axles, or tow from the tail wheel by attaching a tow bar to the rear wheel axle. For further information, refer to Section II.

1-25. LEVELING.

1-26. Two sets of leveling pins are provided as reference markers so that the airplane can be leveled on both longitudinal and lateral axes. For further information, refer to Section II.

1-27. PARKING BRAKES.

1-28. To set the parking brakes, depress the brake pedals evenly and pull out the parking brake control lever. When the brakes have received undue use in landing, permit them to cool before setting the parking brake lever. For further information, refer to Section II.

1-29. MOORING.

1-30. During normal weather conditions, it is not necessary to tie the airplane down if the parking brakes are set and the wheels are properly chocked. If high wind velocities are anticipated, the airplane must be tied down in accordance with the instructions in Section II.

-31. SERVICING AIRPLANE.

1-32. FUEL PROVISIONS. Four fuel tanks are provided; two main, and two auxiliary tanks located in the wing area. The airplane can also be equipped with two, four, six, or eight long range tanks installed in the fuselage. For further information, refer to Section VI.

1-33. BONDING OF FUEL NOZZLE. The fuel delivery hose used in fueling must be metal lined or otherwise bonded between the nozzle and the fitting at the opposite end. For further information, refer to Section II.

1-34. GROUNDING OF FUEL TRUCK. The refueling truck must be equipped with a static grounding chain and two grounding cables when the airplane is being serviced.

1-35. LUBRICATING OIL. Lubricating oil for each engine is contained in a tank located in each nacelle.

1-36. ALCOHOL TANKS. Tanks containing alcohol for de-icing and anti-icing are located in the baggage compartment, on the bulkhead behind the pilot's seat, and below the right wing fillet. For further information, refer to Section III.

1-37. OXYGEN CYLINDERS. Oxygen cylinders are provided and are filled to 425 psi, using USAF approved equipment.

1-38. LUBRICATION. Information on types and application of lubrication is outlined in Section II.

1-39. AIRFRAME.

1-40. WING. The wing is of aluminum alloy construction and consists of a center section to which two nacelles are permanently attached, and two outer wing panels.

1-41. EMPENNAGE. The empennage consists of the vertical and horizontal stabilizers, the elevators, and the rudder.

1-42. FUSELAGE. The fuselage is of semimonocoque construction consisting of upright frames and longerons and covered with 2024-TAL Sheet.

1-43. CARGO COMPARTMENT (C-47 AIRPLANES). The cargo compartment is used for carrying cargo and troops. Provisions are made for the installation of long range fuel tanks in the compartment, when required. For further information, refer to Section II.

1-44. CABIN COMPARTMENT (C-117 AIRPLANES). There are seven rows of three seats in the cabin compartment. The features consist of interior insulation and soundproofing, baggage racks, a toilet and washroom, a coat rack and a buffet. For further information, refer to Section II.

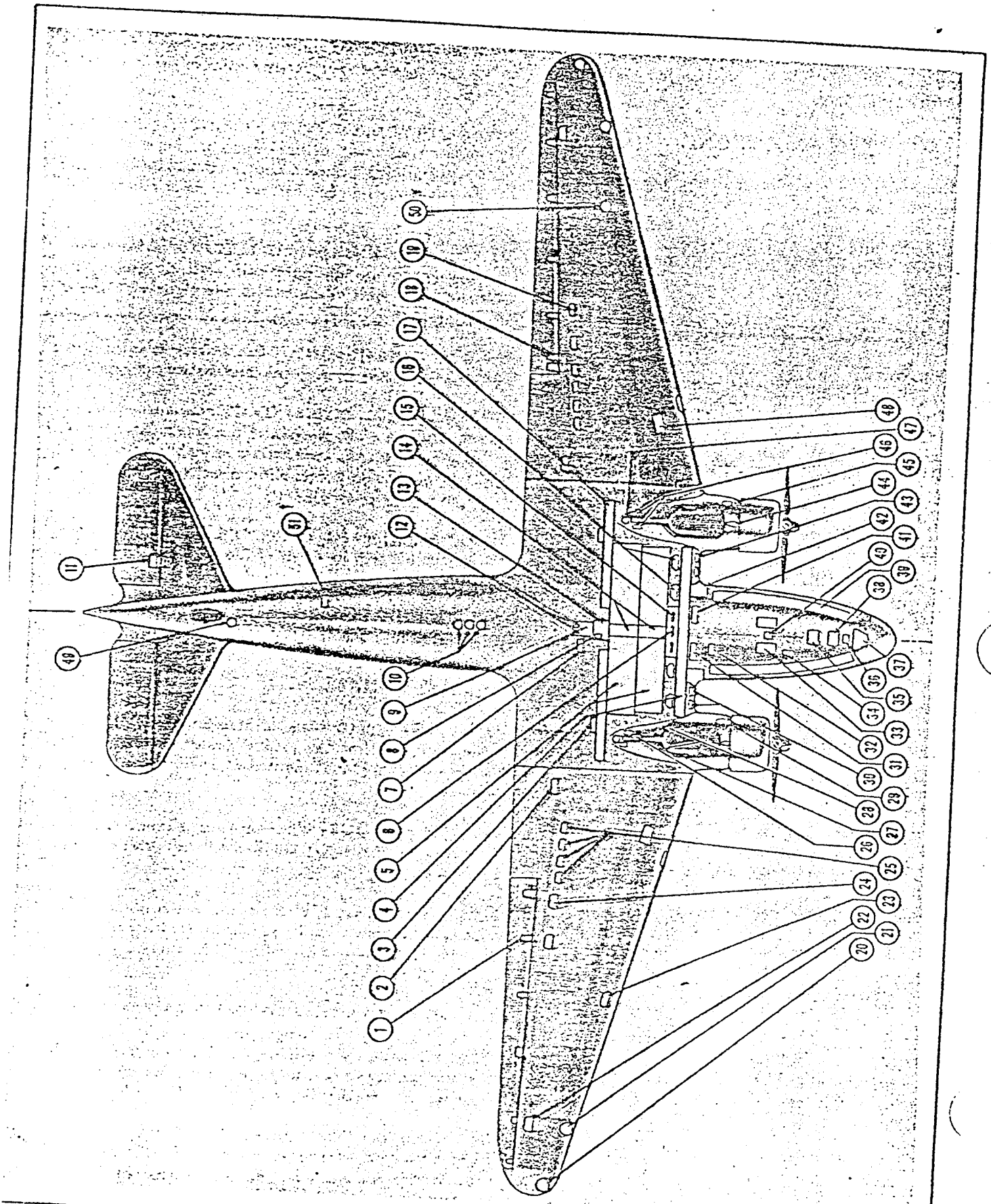

Figure 1-5. Inspection Doors and Cover Plates—Bottom.

15,094

Key to Figure 1-5

Item	Nomenclature	Item	Nomenclature
1.	Aileron Hinge Cover	26.	Brake Pipe Access
2.	Aileron Turnbuckle Access	27.	Outer Wing Access
3.	Aileron Cable and Pulley Access	28.	Nacelle Inspection
4.	Fuel and Instrument Pipes Access	29.	Starter Cable Release Access Door
5.	Fuel Tank Covers	30.	Wing Nose Section Access
6.	Fuel Pipe Access	31.	Wobble Pump Control Access
7.	Hydraulic Pipes Inspection	32.	Outside Battery Receptacle
8.	Bellcrank Inspection	33.	Battery Access
9.	Flap Strut Access	34.	Servo Cable Access
10.	Formation Lights Access	35.	Control Cable Access
11.	Elevator Tab Drum Access	36.	Control Cable Inspection
12.	Brace Strut Bolt Access	37.	Pedestal and Control Column Access
13.	Bellcrank Access	38.	Control Cable Access
14.	Fuel Pipes Access	39.	Fuselage Tunnel Covers
15.	Selector Valve Access (2)	40.	Turnbuckle Access
16.	Engine Controls Access	41.	De-Icer Distributor Valve Inspection
17.	Rear Spar Access	42.	Hydraulic and De-Icer Pipe Access
18.	Aileron Tab Drum Access	43.	Fuel and Instrument Pipes Access
19.	Wing Inspection	44.	Oil Cooler Drain Plug Access
20.	Light Access	45.	(Starter Release) Ground Heat Duct
21.	Electrical Junction Box Access	46.	Landing Gear Attach Bolt Access
22.	Outer Aileron Bellcrank Access	47.	Brake Pipe Access
23.	Wing Inspection	48.	De-Icer Pipe Access
24.	Aileron Inner Bellcrank Access	49.	De-Icer Drain Cock
25.	Aileron Cable Inspection	*50.	Flux Gate Transmitter Access
		†51.	Toilet Trap Access

*Installed on C-47 Airplanes
†Installed on C-117 Airplanes

1-45. PYROTECHNICS. The airplane is equipped with the following pyrotechnic units: a pistol, pistol holder, signal flare container, and the required ammunition. For further information, refer to Section II.

1-46. WINTERIZATION PROCEDURES.

1-47. GENERAL DESCRIPTION. When an installed item has been winterized, replacement must be made with a like winterized item, whenever possible. If the replacement item has not been winterized, or if it is impossible to determine whether or not the replacement has been winterized, a record of each replacement must be kept. Include in the record a complete identification, for example, the part number, specification, nomenclature, etc, of the replacement item, the date installed, and the organization that installed it. For further information, refer to Section II.

1-48. HEATING AND VENTILATING SYSTEMS.

1-49. GENERAL DESCRIPTION. The heating and ventilating systems are of two major types. A steam heating system is installed in early C-47 airplanes and a hot air heating system is installed in later C-47 and C-117 airplanes. For further information, refer to Section III.

1-50. STEAM HEATING AND VENTILATING SYSTEM. The steam heating system consists of a boiler, water supply tank, funnel, pressure gage, pressure regulator, pressure relief valve, two air eliminators, two steam traps (only one steam trap on some airplanes), shutoff valves, radiator, two windshield defrosting shields, airscoops, pipes, ducts, outlets, controls, and control linkages. A reserve water supply tank is installed on some airplanes.

1-51. HOT AIR HEATING AND VENTILATING SYSTEM (SOME C-47 AIRPLANES). The hot air heating and ventilating system consists of two heat exchangers, two mixing chambers, four critical temperature warning lights, two critical temperature thermoswitches, and the necessary airscoops, ducts, tubing, hose, outlet valves, controls, and control linkages. The windshield defrosting shields serve as baffles for the outer windshield defrosting. For information on the other systems, refer to Section III.

1-52. HOT AIR HEATING AND VENTILATING SYSTEM (C-117 AIRPLANES). The heating and ventilating system consists of two heat exchangers, one mixing

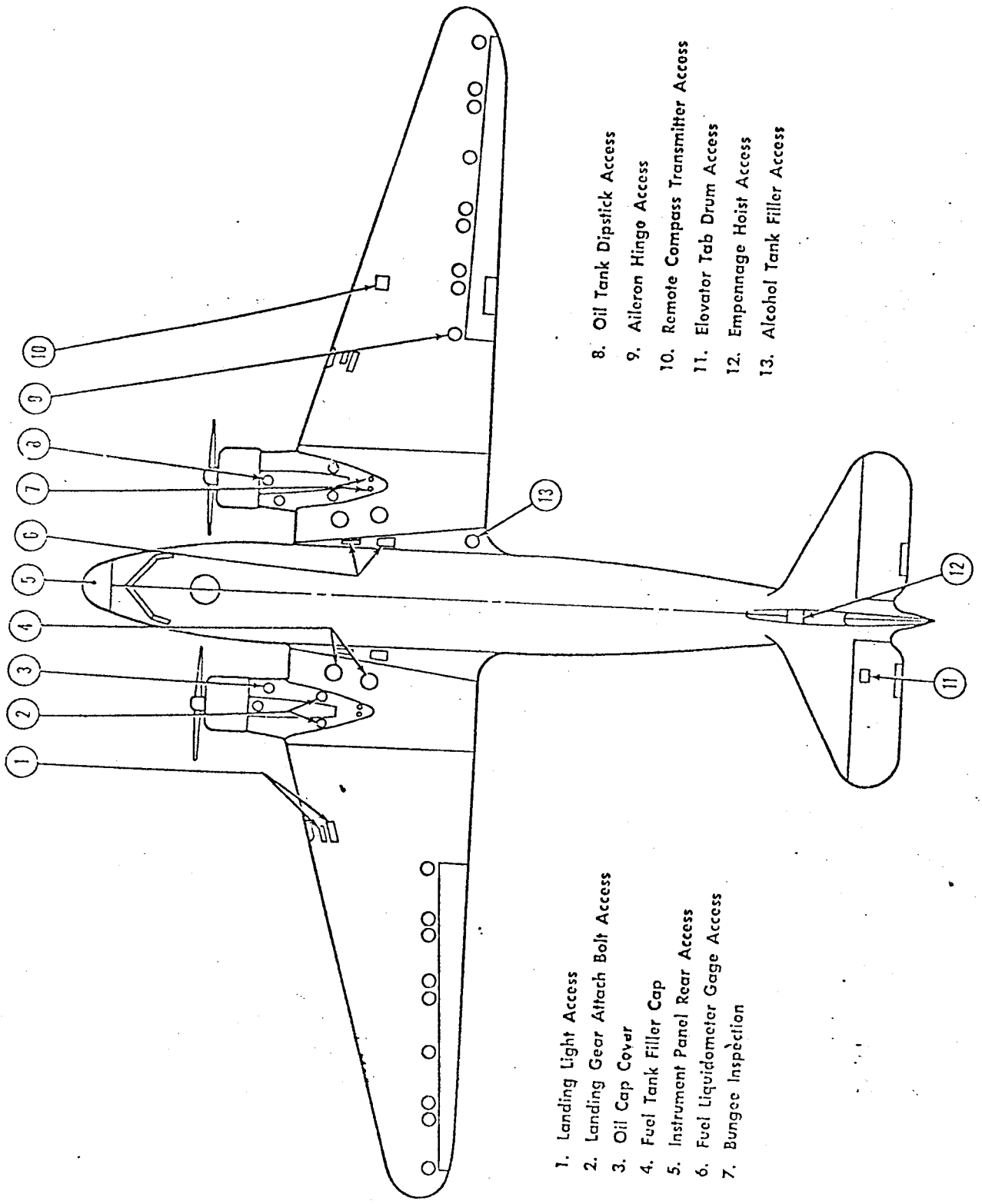

Figure 1-6. Inspection Doors and Cover Plates—Top

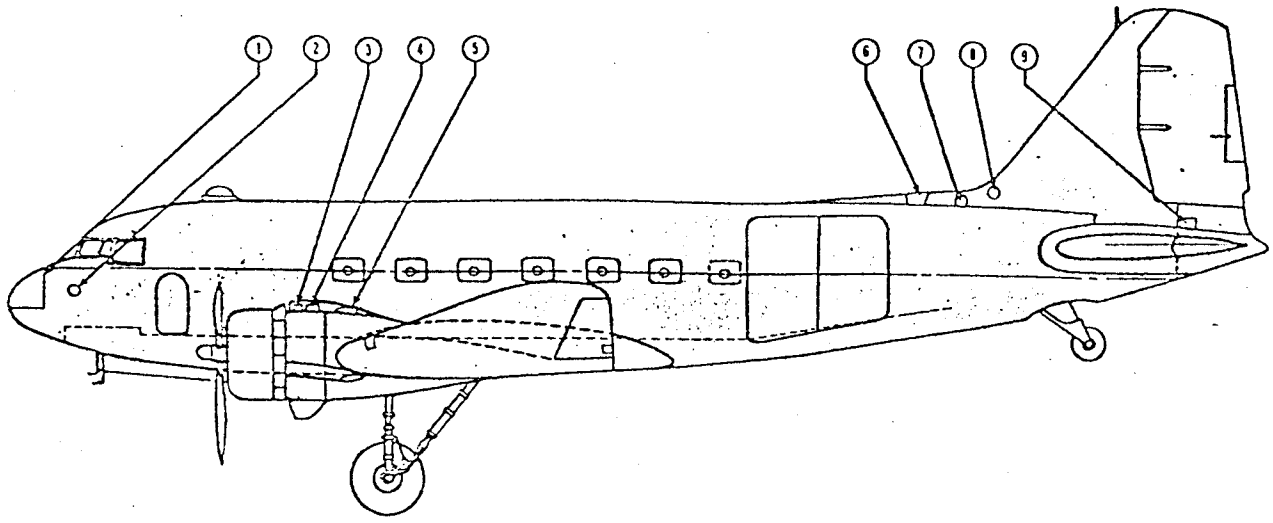

1. Rear Instrument Panel Access
2. Antenna Installation Access
3. Ram Door (Actuating Cylinder) Access (Also Scoop Removal 4 Places)
4. Ram Door Linkage (Also Scoop Removal 4 Places)
5. Removal of Rear Half of Scoop (4 Places)
6. Tail Surface Hoisting Access
7. Vertical Stabilizer De-Icer Access
8. Vertical Stabilizer De-Icer Access
9. Cone Junction Tube Access

Figure 1-7. Inspection Doors and Cover Plates (C-47 Airplanes)—Left Side

31,064

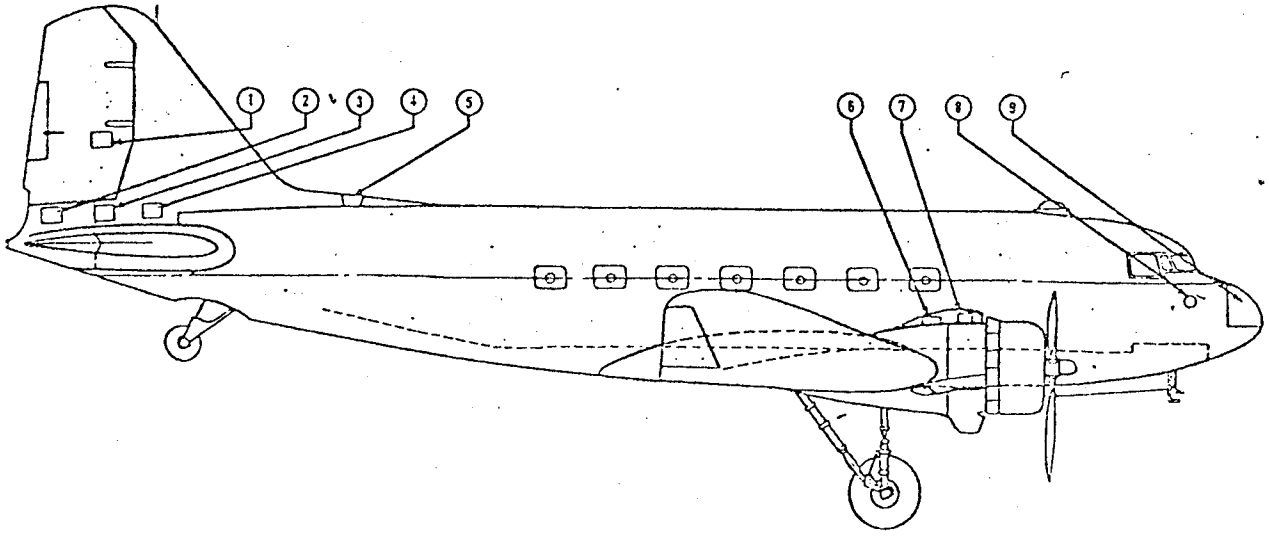

1. Rudder Tab Drum Access
2. Elevator Torque Tube Access
3. Rudder Torque Tube Access
4. Electrical Junction Box Access
5. Tail Surface Hoisting Access
6. Scoop Removal Access (4 Places)
7. Ram Actuating Cylinder and Scoop Removal
8. Antenna Installation Access
9. Rear Instrument Panel Access Hood

Figure 1-8. Inspection Doors and Cover Plates (C-47 Airplanes)—Right Side

31,063

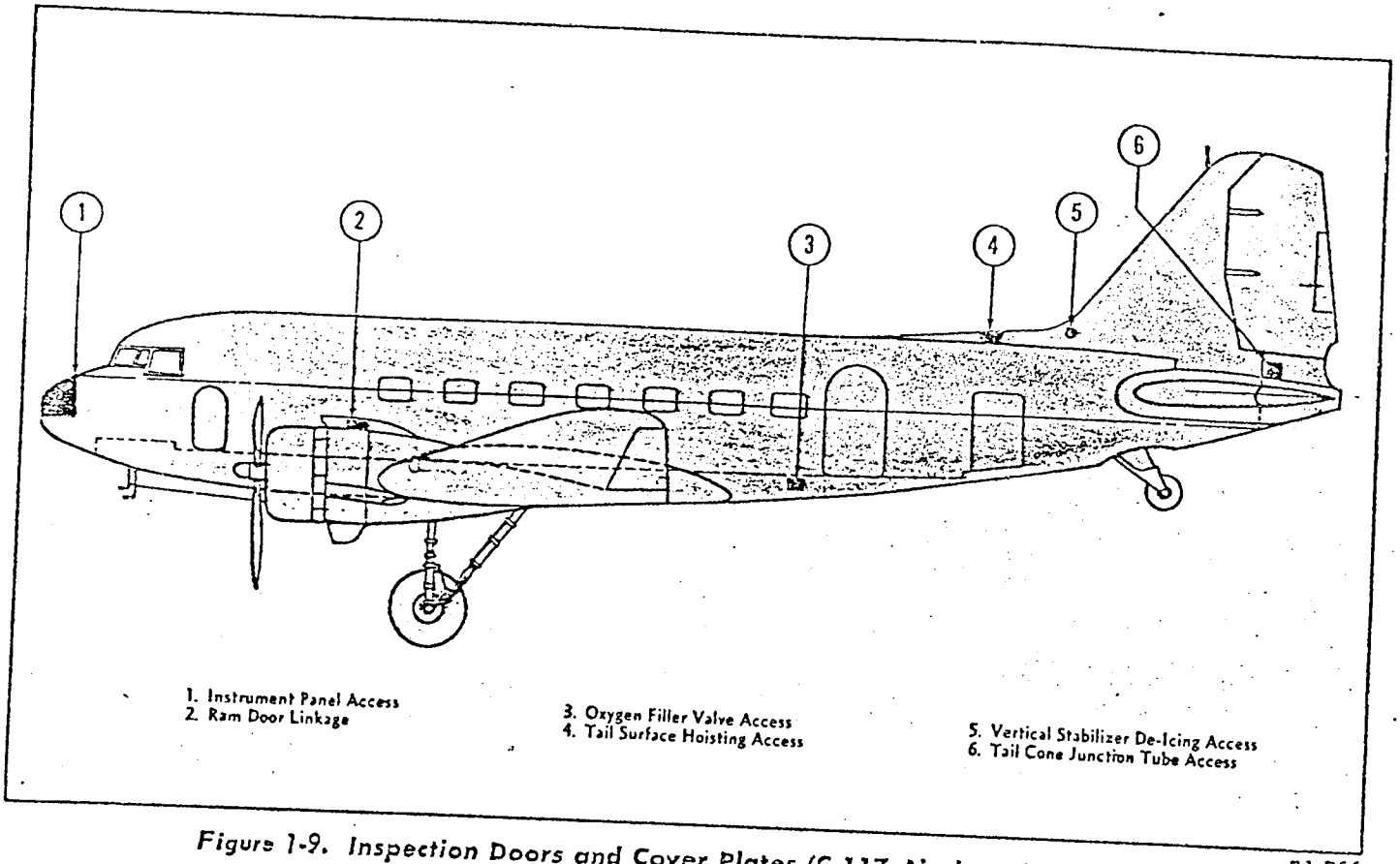

Figure 1-9. Inspection Doors and Cover Plates (C-117 Airplanes) — Left Side

31,056

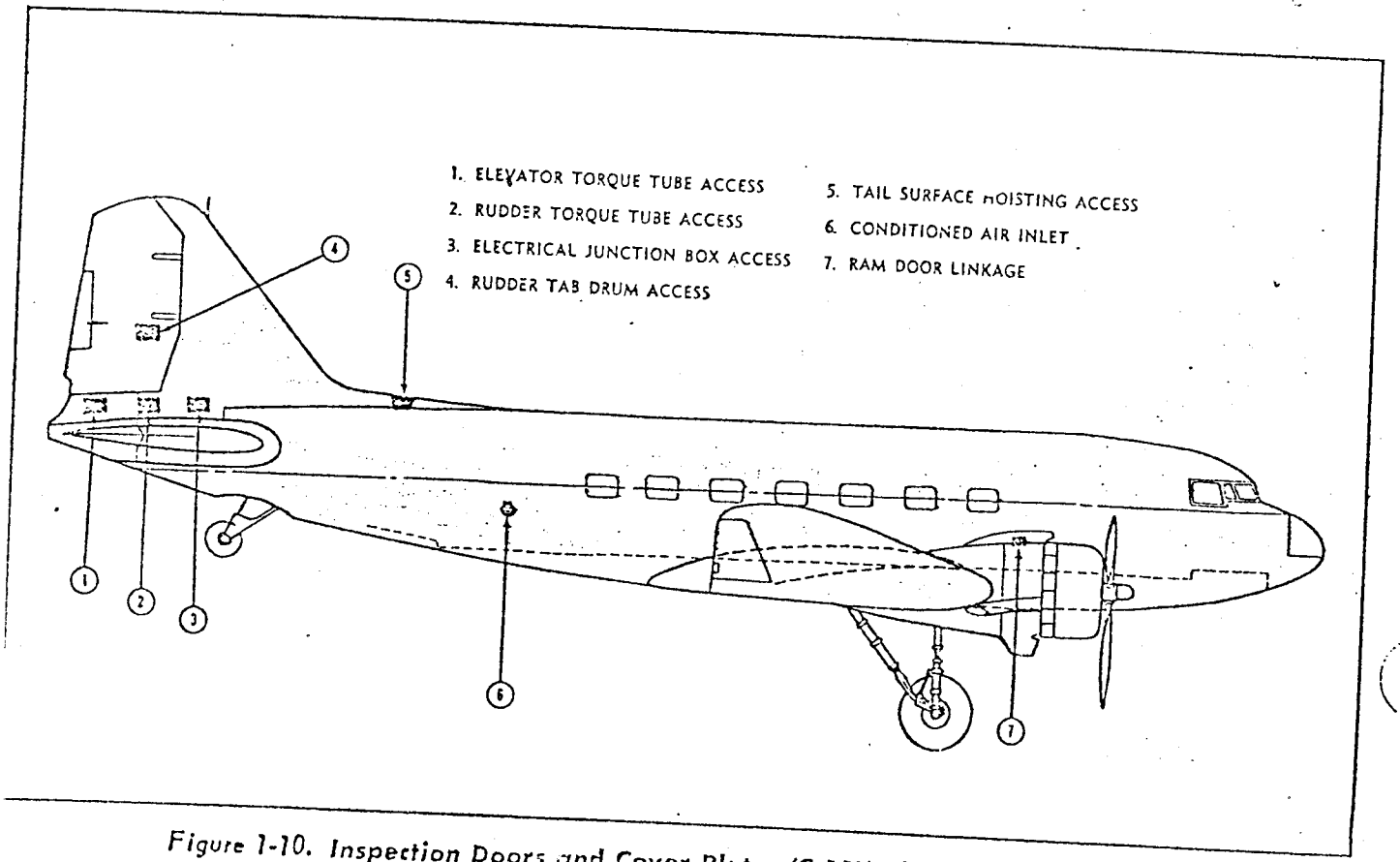

Figure 1-10. Inspection Doors and Cover Plates (C-117 Airplanes) — Right Side

31,055

chamber, two critical temperature thermoswitches, two windshield defrosting shields, airscoops, ducts, tubing, hose outlet valves, vents, controls, and control linkages.

1-53. DE-ICING SYSTEM.

1-54. GENERAL DESCRIPTION. Air-inflated rubber de-icing boots are provided to remove ice from the leading edges of the wings and the tail surfaces. Tubular air cells incorporated within the wing boots are inflated alternately causing a wavelike motion of the de-icing boot which loosens the ice that has formed. The force of the airstream removes the ice.

1-55. DE-ICING BOOTS. The de-icing boots are fabricated of rubber with tubes extending lengthwise within the rubber strips positioned along the leading edges of the wing and empennage. The wing boot installation consists of two outboard and two inboard sections, each containing three parallel inflatable tubes. The empennage boot installation consists of two horizontal stabilizer sections and a vertical stabilizer section, each with two parallel inflatable tubes. When de-icing, the center tube in each wing boot is inflated first in the sequence, and the stabilizer tubes inflate simultaneously.

1-56. DE-ICING PUMP. Pressure for inflating the de-icer boots is supplied from two engine-driven vacuum pumps.

1-57. ANTI-ICING SYSTEMS.

1-58. GENERAL DESCRIPTION. The anti-icing system prevents ice formation on the surface areas of the airplane. Two sources of heat are available to melt the ice or prevent its formation. One source of heat is from the exhaust unit hot air duct. This hot air supply defrosts the windshields and also maintains the carburetor temperature above a fixed minimum. The other source is from the electrical current which operates the heater to prevent ice formation on the instrument pitot tubes.

1-59. WINDSHIELD ANTI-ICING SYSTEM. The windshield anti-icing system supplies alcohol on the outside of the windshields to prevent ice from forming and to maintain clear visibility. This system consists of a tank, pump, and filter which are common to both the windshield and carburetor anti-icing systems. Alcohol is supplied from the tank, through the pump and filter, to the front and side windshields.

1-60. PROPELLER ANTI-ICING SYSTEM. The propeller anti-icing system is provided to prevent ice from forming on the propeller blades. The fluid is pumped from the supply tank, through a shutoff valve, filter, and an electrical pump, to a slinger ring installed on the propeller hub.

1-61. FIRE EXTINGUISHER SYSTEM.

1-62. The airplane is equipped with a bromochloromethane (CB) system to extinguish engine fires. A fire in either engine is extinguished by actuating the switches located on the control panel below the hinged cover in the floor aft of the pilot's control pedestal.

1-63. HYDRAULIC SYSTEM.

1-64. GENERAL DESCRIPTION. A pressure-type hydraulic system is installed in the C-47A, C-47B, C-47D, and C-117 airplanes to operate the main landing gear, brakes, cowl flaps, wing flaps, the nonram carburetor air filter mechanism on C-47 airplanes only, a two-speed supercharger control on some airplanes, and the windshield wipers. An engine-driven hydraulic pump is installed on the accessory drive section of each engine. Approximately 6 gallons of hydraulic fluid, Specification MIL-O-5606, are required to fill the system.

1-65. HYDRAULIC CONTROL PANEL. The hydraulic control panel is an assembly consisting of valves, fittings, and piping installed on the bulkhead aft of the co-pilot's seat. The control panel installation is divided into an upper and a lower section. The lower section consists of the panel, engine pump selector valve, wing flap control valve, landing gear control valve, hydraulic hand pump, pressure regulator, system pressure relief valve, wing flap relief valve, hand pump-to-pressure accummulator shutoff valve, auto-pilot shutoff valve, and check valves with the necessary piping and fittings. The lower panel section is installed as a single unit. The upper panel section contains the hydraulic reservoir fluid level sight gage and a placard listing the fluid filling instructions. The reservior filler neck extends from the hydraulic reservoir through an opening in the upper panel located adjacent to the sight gage.

1-66. HYDRAULIC BRAKE SYSTEM. The main landing gear wheel brakes are applied independently, or simultaneously, by means of two brake control valves which are contained in a single housing and linked to the rudder brake pedals. Application of toe pressure on the rudder brake pedals allows hydraulic fluid to flow under pressure through the brake control valves and piping to the brake actuating cylinders.

1-67. COWL FLAP HYDRAULIC SYSTEM. Hydraulically actuated cowl flaps are provided on the trailing edge of each engine antidrag ring to control the flow of air over the engines. The cowl flaps for each engine are operated by a hydraulic control valve located on the right side panel of the flight compartment.

1-68. WING FLAP HYDRAULIC SYSTEM. The wing flaps are the split trailing-edge type and are actuated

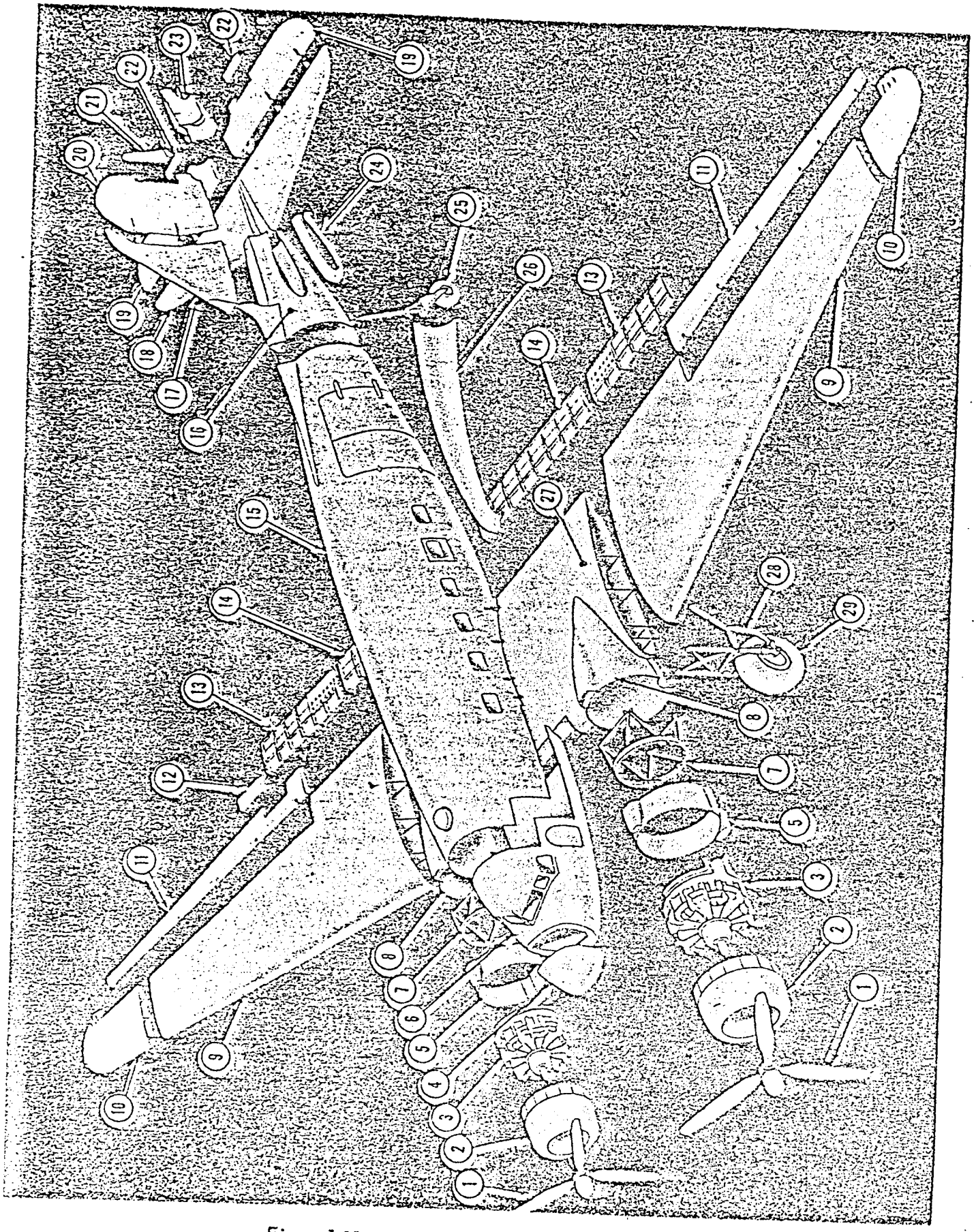

Figure 1-11. Major Components of C-47 Airplanes

31,060

Key to Figure 1-11

Item	Nomenclature	Item	Nomenclature
1.	Propeller	15.	Fuselage
2.	Cowling	16.	Tail Section
3.	Engine	17.	Vertical Stabilizer
4.	Nose	18.	Horizontal Stabilizer
5.	Antidrag Ring	19.	Elevator
6.	Flight Compartment	20.	Rudder
7.	Engine Mount	21.	Rudder Trim Tab
8.	Nacelle	22.	Elevator Trim Tab
9.	Outer Wing	23.	Tail Cone
10.	Outer Wing Tip	24.	Fairing
11.	Aileron	25.	Tail Wheel
12.	RH Aileron Trim Tab	26.	Filler
13.	Outer Wing Flap	27.	Center Wing
14.	Inner Wing Flap	28.	Landing Gear
		29.	Main Wheel

by a hydraulic cylinder. The wing flaps are controlled by the wing flap control valve located on the hydraulic control panel.

1-69. **HYDRAULIC WINDSHIELD WIPER.** Hydraulically actuated windshield wipers are provided on the pilots' windshields. Hydraulic fluid pressure for the windshield wipers is supplied from a cross fitting in the brake pressure pipe.

1-70. POWER PLANT.

1-71. GENERAL DESCRIPTION. C-47, C-47A and C-117C airplanes are powered by two R-1830-92 engines. A 14 cylinder engine is mounted on the forward side of each firewall by means of a steel tube engine mount, and is enclosed by engine cowling. Fuel is supplied to each engine by an injection-type carburetor. Several engine-driven accessory units are mounted at the rear of the engine. Ignition is furnished by two magnetos located on the aft section of each engine. The ignition harness and spark plugs are shielded to prevent radio interference. Levers on the control pedestal are connected by cables to the units on the engine and govern the carburetor mixture, throttle, and carburetor hot air positions.

1-72. C-47B and C-117A were originally equipped with two R-1830-90C engines having the same general characteristics and accessories as those installed on C-47 and C-47A airplanes, with the exception of the two-speed superchargers. The superchargers enable the airplane to operate more efficiently at higher altitudes than the C-47A airplanes. The engines installed on C-47B airplanes are not interchangeable with those on the other C-47 airplanes. When C-47B airplanes are modified to incorporate R-1830-90D engines, they are reclassified as C-47D airplanes.

1-73. ENGINES. The engines are supported by a mount assembly secured to the firewall. The conversion of the R-1830-90C engines, if installed, consists of the removal of the two speed clutch and the installation of a single-speed gear drive ratio. These engines have the following characteristics:

a. The 14 cylinders arranged in 2 banks of 7 each.

b. Radial design and air-cooled.

c. Compression ratio of 6.7 to 1.

d. 1050 hp at 2250 rpm at sea level.

e. 1050 hp at 2250 rpm at 7500 feet altitude for C-47 and C-47A airplanes.

f. 1000 hp at 2500 rpm at 12,000 feet altitude for C-47B airplanes using high blower.

g. 1200 hp at 2700 rpm at sea level take-off.

h. 1830 cubic inches of cylinder displacement.

1-74. ENGINE SECTION OF NACELLE. The engine section of the nacelle includes the engine mount and all cowling forward of the firewall. The engine cowling is made up of three sections, with the cowl flaps attached to the aft edge. The cowling is not interchangeable between the left and right nacelles.

1-75. **CARBURETOR AIR INDUCTION SYSTEM.** Three methods of carburetor air induction are used to route air into the carburetor: ram, ram filtered, and ram-nonram filtered. For detailed information on the induction system, refer to Section IV.

1-76. CARBURETOR. The R-1830-92 engines are equipped with PD12-H4 carburetors, and R-1830-90 engines have PD12-F5 carburetors. The carburetor consists of the following components: the main throttle body, automatic mixture control, fuel regulator unit, fuel control unit, and an adapter unit. For further details refer to Section IV.

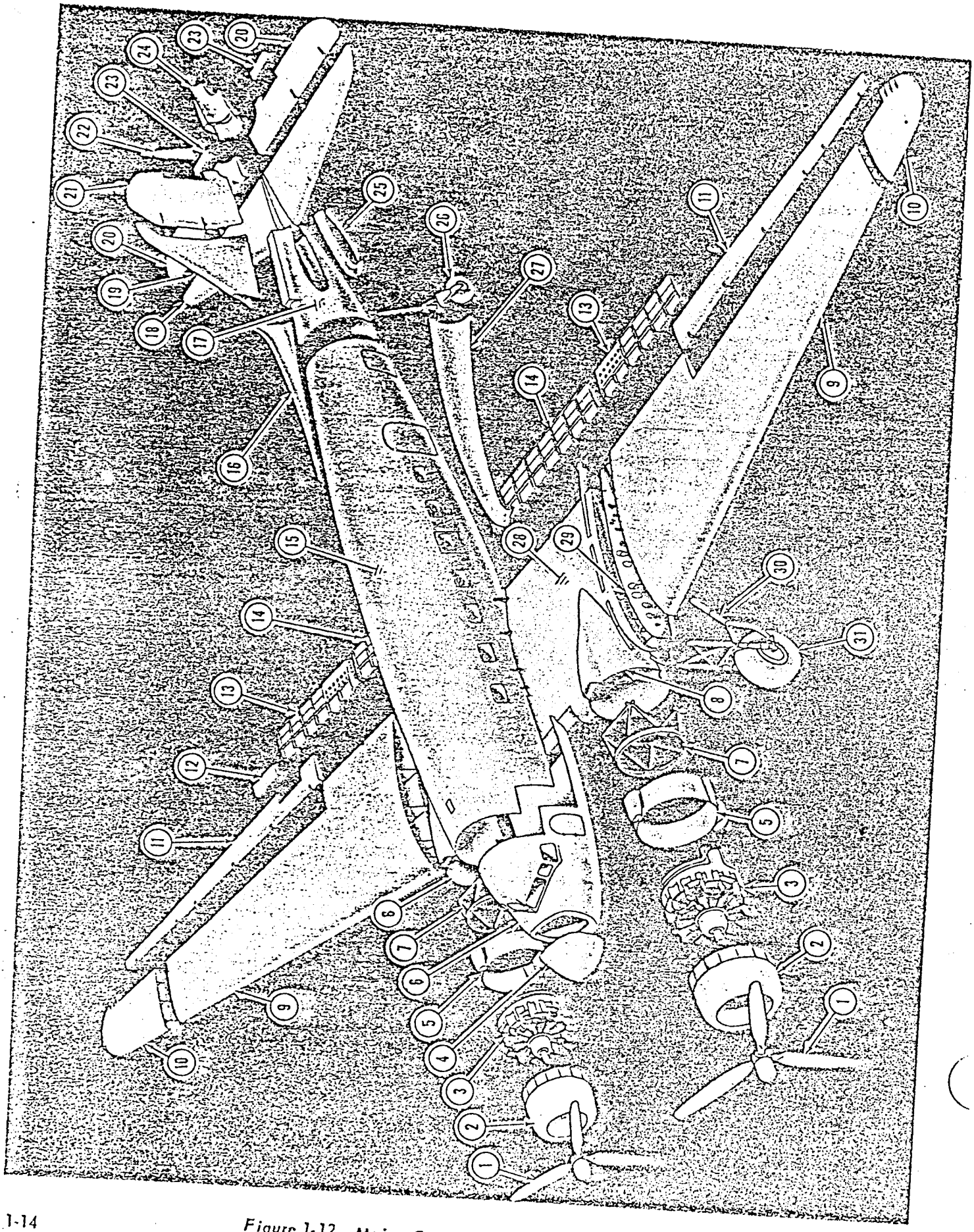

Figure 1-12. Major Components of C-117 Airplanes

31,051

Key to Figure 1-12.

Item	Nomenclature	Item	Nomenclature
1.	Propeller	16.	Fuselage Fairing
2.	Cowling	17.	Tail Section
3.	Engine	18.	Horizontal Stabilizer
4.	Nose Section	19.	Vertical Stabilizer
5.	Antidrag Ring	20.	Elevator
6.	Flight Compartment	21.	Rudder
7.	Engine Mount	22.	Rudder Trim Tab
8.	Nacelle	23.	Elevator Trim Tab
9.	Outer Wing	24.	Tail Cone
10.	Outer Wing Tip	25.	Empennage Fairing
11.	Aileron	26.	Tail Wheel
12.	RH Aileron Trim Tab	27.	Fillet
13.	Outer Wing Flap	28.	Center Wing
14.	Inner Wing Flap	29.	Rib
15.	Fuselage	30.	Landing Gear
		31.	Main Wheel

1-77. ENGINE SUPERCHARGERS (C-47, C-47A, AND C-47D AIRPLANES). The R-1830-92 engines installed on C-47 and C-47A airplanes, and the R-1830-90D engines on C-47D airplanes are equipped with integral single-speed superchargers with an impeller gear ratio of 7.15 to 1.

1-78. ENGINE SUPERCHARGERS (C-47B AND C-117A AIRPLANES). The R-1830-90C engines installed on C-47B and C-117A airplanes incorporate single-stage, two-speed superchargers with a low-blower ratio of 7.15 to 1, and a high-blower ratio of 8.47 to 1. The low gear ratio allows the engines to operate efficiently at sea level and low altitudes. The high gear ratio allows the engine to maintain higher power at greater altitudes.

1-79. ENGINE OIL PUMP. A three-section oil pump assembly is installed at the lower left side of the engine rear case. One impeller gear of each section is keyed to the drive shaft and rotates an impeller turning free on an idler shaft secured to the pump end plate. The outboard section of the pump supplies oil under pressure to the engine and the inboard and center sections pick up oil from the engine rear case and the main sump, and return it under pressure through an external pipe to the oil supply tank.

1-80. ENGINE PRIMER SYSTEM. When the engine primer solenoid is energized, fuel flows under pressure to the spider fitting mounted on the intake pipe of cylinder No. 1. The spider fitting serves as a distribution manifold through small pipes connected to the top eight cylinders for priming the engine (on some airplanes, the priming fuel is heated).

1-81. ENGINE MANIFOLD PRESSURE SYSTEM. The engine manifold pressure system measures the pressure at which the fuel mixture enters the intake pipes of the engine. The control and dual gages are located on the instrument panel in the flight compartment.

1-82. ENGINE IGNITION SYSTEM. The engine ignition system includes the ignition switches, a booster coil installed on C-47 airplanes, or an induction vibrator installed on C-47A airplanes, magnetos, ignition harness, and the spark plugs.

1-83. MAGNETOS. Ignition is furnished to the spark plugs from two magnetos mounted on the engine rear accessory section. The right magneto is connected to the front spark plugs of all cylinders and the left magneto is connected to the rear spark plugs.

1-84. SPARK PLUGS. Two spark plugs are installed in each of the 14 cylinders. Five types of plugs are available and are to be used interchangeably in sets but must not be mixed. Individual leads are routed from the distributor block of the magneto to each spark plug.

1-85. PROPELLER. A hydraulically controlled propeller is installed on the drive shaft of each engine. These propellers are the fast-feathering type. A constant-speed control unit, mounted on the propeller pad of each engine, automatically maintains the constant speed of each engine. The engine-driven propeller governor adjusts the propeller blade angle through a constant range of 1200 rpm minimum to 2700 rpm maximum to meet the changing conditions of altitude, attitude, and throttle setting. The change in blade angle is accomplished through regulation of the flow of engine oil under pressure to and from the propeller. Each propeller is equipped with a feathering system operated by an individual electrical motor-driven hydraulic pump installed on the engine firewall and is electrically controlled from the flight compartment.

1-86. STARTER SYSTEM. On C-47 airplanes, an electrical inertia-type starter with a solenoid-actuated meshing device is mounted on each engine. On C-47A

airplanes, a combination electrical inertia or direct-cranking type starter with a solenoid device is mounted on each engine. Electrical-type starters are operated by switches located in the flight compartment.

1-87. OIL SYSTEM. Each engine section is provided with an independent oil system. The system consists of an oil supply tank located in each nacelle, an oil temperature regulator installed on the underside of the nacelle, and the connecting pipes and fittings. On some modified C-47 airplanes, the oil tank supplies warm oil during cold weather operations.

1-88. OIL COOLER. The oil cooler is an airstream radiator unit which cools the heated oil returning from the engine, and is located on the underside of the nacelle. The assembly consists of a shell, an outer warming jacket or muff, a core separated by baffles, and a mounting flange for the pressure control valves.

1-89. FUEL SYSTEM.

1-90. GENERAL DESCRIPTION. Fuel is supplied to the engines from two main tanks and two auxiliary tanks mounted in the center wing of the airplane. Fuel quantity is measured by a liquidometer system which consists of a float assembly and liquidometer unit installed in each tank and electrically connected to the fuel gage located on the right instrument panel in the flight compartment. Two selector valves operated by dial and handle type controls are located in the flight compartment. Under normal conditions, the left engine draws fuel from the left tanks and the right engine draws fuel from the right tanks. By using the cross-feed selector valves, fuel may be supplied from any tank to either engine. Pipes connect the selector valve to the hand-operated wobble pumps which are operated to raise the fuel pressure when starting the engines, or before the engine-driven fuel pumps are in operation. The fuel flows from the wobble pumps through pipes to the fuel strainers located in each nacelle, then to the engine-driven pumps and, under pressure, to the carburetors. A cross-feed pipe is connected to the pressure side of each engine-driven pump, and the two cross-feed valves are operated by the single control located in the flight compartment. The cross-feed system supplies both engines with fuel from one engine-driven pump in case either pump fails. On late C-47A, C-47B, and C-117 airplanes, the wobble pumps have been replaced by two electrical booster pumps, with the fuel strainers relocated in the system just ahead of the booster pumps. Each fuel strainer is located in the center wing near the respective selector valve. The fuel flows from the selector valves, through the strainers, the booster pumps, and the engine-driven pumps, to the carburetor. On airplanes equipped with electrical booster pumps, there is no cross-feed system installed, but operation of the fuel selector valves remains the same. The booster pumps furnish ample pressure and supply adequate fuel for operation in case either engine-driven pump fails. A vapor overflow pipe connects the top chamber of the carburetor to the main tanks, and a fuel pipe connected at the rear of each carburetor operates the fuel pressure gage located in the flight compartment. The fuel pressure gage normally indicates 16- to 18-pounds pressure with engines running. On some airplanes, a pressure warning switch is installed in the fuel pressure gage system. If the fuel pressure drops below 12 pounds, the pressure warning switch illuminates a warning light located in the flight compartment. An oil dilution solenoid supplies fuel to the engine oil system and the propeller feathering oil system when starting the engines. Another solenoid valve supplies fuel to the eight upper cylinders of the engine for priming. On some airplanes, this fuel is heated. The engine primer solenoid is mounted in the nacelle near the fuel strainers, or on the firewall next to the oil dilution solenoid. On some airplanes, a hand primer, located in each nacelle, is provided in place of the primer solenoid valve. Vent pipes for each fuel tank are provided and a vapor pipe connects each main tank with the corresponding auxiliary tank.

1-91. LONG RANGE (FERRY) FUEL SYSTEM. Provisions for carrying additional fuel for long range operations are made available by installing extra tanks in the cargo compartment of the airplane. For detailed information regarding the installation and operation of this system, refer to Section VI.

1-92. INSTRUMENTS.

1-93. GENERAL DESCRIPTION. All the required instruments are installed in the flight and navigator's compartments. These are generally classified as flight and navigation instruments, engine instruments, temperature indicating instruments, position indicating instruments, and miscellaneous instruments. The flight and navigation instruments are operated electrically by the vacuum system, or from pitot-static pressure. The engine and miscellaneous instrument systems are operated electrically, or directly by system pressure. The instruments are mounted in nonmagnetic type panels which are attached to the fuselage structure with five shock absorbing mount units. The instruments are illuminated by incandescent- and fluorescent-type lights, located on each side of the flight compartment, on the control pedestal, and on the instrument panel.

1-94. INSTRUMENT PANEL. The instrument panel, fabricated in sections which are bolted together to form a single unit, is attached to the support structure.

1-95. FLIGHT AND NAVIGATION INSTRUMENTS. The flight and navigation instruments are installed on the main instrument panel and consist of two airspeed indicators, two altimeters, and one vertical velocity in-

dicator. Two pitot-static tubes mounted in masts on the underside of the fuselage beneath the flight compartment, a static selector valve, and the connecting tubing provide separate sources of pressure for operating each airspeed indicator. The static pressure from each tube is combined into a single source routed to the instruments. A static selector valve is connected to the static pressure source and to an alternate static tube routed through the aft fuel tank area. On late C-47A and early C-47B airplanes, the alternate installation provides a source of emergency static pressure for the altimeters and vertical velocity indicator if the pitot-static tube source fails. On early C-47A, late C-47B, and C-117 airplanes, the alternate installation provides an emergency source for the airspeed indicators, altimeters, and the vertical velocity indicator if the pitot-static source fails. The pitot-static tubes are protected from icing by electrical heaters incorporated in the units.

1-96. AIRSPEED INDICATORS. Two airspeed indicators are installed on the main instrument panel. The single pointer on the indicator moves over the dial to indicate the speed of the airplane relative to the surrounding air in terms of either knots or miles per hour.

1-97. ALTIMETERS. The pilot and co-pilot are provided with barometric altimeters. The altimeter measures air pressure and is calibrated in feet of altitude. The atmosphere surrounding the earth exerts a pressure in proportion to its weight. This pressure is greatest at sea level (the standard reference point) or at points below sea level, and decreases as altitude is increased. Due to varying weather conditions, the atmospheric pressure varies over the surface of the earth, and over a period of time at a particular location. The altimeter operates by these changes in pressure. The airtight case of the instrument is connected to the airplane's static pressure system so that the ambient air pressure at the altitude of the airplane is transmitted to the inside of the case.

1-98. TURN-AND-SLIP INDICATOR. The turn-and-slip indicator is a basic flight instrument designed to indicate the angular velocity and direction of a turn, and any overbanking or underbanking while making the turn. The turn rate and direction are computed by a vacuum-driven gyroscope. The gyro actuates a needle that gives an indication of direction and degree of turn. An inclinometer, mounted to the dial in such a way that its entire length is visible to the pilot, indicates any overbanking or underbanking condition.

1-99. DIRECTIONAL INDICATOR. The directional indicator is a flight instrument, designed to provide the pilot with a "dead beat" visual directional reference for steering straight courses and making precision turns. The directional indicator is operated from a vacuum supply of 3½ to 4 inches Hg. A caging knob is used to initially set the directional indicator with the magnetic compass and to reset it at intervals. Pushing the knob in cages the mechanism, setting the card so that the desired heading can be made. Pulling the knob out releases the mechanism and leaves the horizontal gyro free.

1-100. ATTITUDE INDICATOR. The attitude indicator is a flight instrument that provides the pilot with constant visual indication of the attitude of the airplane relative to the earth in pitch and roll. The vacuum-driven gyro motor revolves with its spin axis in an upright position. Due to gyroscopic inertia, this upright position is rigidly maintained as the airplane bearing the instrument pitches and rolls about the gyro.

1-101. GLIDE SLOPE INDICATOR. The glide slope indicator is mounted on the left side of the main instrument panel and furnishes the pilot with vertical and lateral guidance during landing operations when visibility is poor.

1-102. MAGNETIC COMPASS. The magnetic compass located in the vee of the windshield above the glareshield, is used to indicate continuously the heading of the airplane with reference to the earth's magnetic field. The compass card and magnets are attached to a float containing a pivot. The card is graduated in 5-degree increments to represent horizontal angle. A compensator is attached to the compass to provide a means of compensating it for deviation. It consists of two sets of permanent bar magnets arranged in two planes at right angles to each other and assembled above the center of the compass magnets. Each set is adjusted by slot-head screws marked N-S and E-W and is located under a cover at the top of the lens ring.

1-103. REMOTE-INDICATING MAGNETIC COMPASS. The remote-indicating magnetic compass is used to continuously indicate the heading of the airplane with reference to the earth's magnetic field.

1-104. GYRO FLUX GATE COMPASS SYSTEM. The gyro flux gate compass system operates on the principle of electro-magnetic induction. The system consists of a transmitter, master indicator, amplifier, repeater indicator, and a remote electrical caging drive motor.

1-105. ENGINE INSTRUMENT SYSTEMS. The engine instrument systems are provided to give the pilot a means of monitoring the performance of the engines. The engine instrument systems consist of the tachometer system, manifold pressure indicating system, oil pressure indicating system, fuel pressure indicating system, fuel quantity indicator, and the temperature indicating systems.

1-106. TACHOMETER SYSTEM. The tachometer system is provided to give the pilot visual indication of engine speed. The system consists of one dual indicator on some airplanes, or two single indicators on other airplanes, mounted on the main instrument panel, and tachometer generator mounted on each engine. The tachometer generator is directly coupled to the tachometer drive shaft outlet and is mounted on the outboard side of the engine. When the engine shaft is rotated, the shaft of the tachometer generator rotates and produces three-phase electrical power which is transmitted to the synchronous motor inside the indicator unit. As the speed of the engine changes, the speed of the tachometer generator changes, causing a corresponding change in the speed of the synchronous motor of the indicator. The dual indicator is calibrated to indicate the revolutions per minute (0 to 4500) of both engines. There are two indicator pointers, one marked "L" for the left engine and the other marked "R" for the right engine. The single indicators, when installed, are calibrated from 0 to 3000 rpm, or 0 to 3500 rpm.

1-107. MANIFOLD PRESSURE INDICATING SYSTEM. The pressure indicated on the manifold pressure gages, located on the center of the instrument panel, is taken from the intake manifold of each engine. A valve is installed in the manifold pressure gage piping to clear the piping of condensation and foreign matter.

1-108. ENGINE OIL-PRESSURE INDICATING SYSTEM. A direct engine oil-pressure indicating system is installed on the airplane, and consists of an oil-pressure indicator, oil gage service port, and the connecting piping.

1-109. ENGINE FUEL PRESSURE INDICATING SYSTEM. A dual direct reading hydrostatically operated fuel pressure gage mounted on the main instrument panel is calibrated in pounds per square inch. Two pipes connect the fuel pressure gage in the flight compartment to the fuel pressure pipe inlet at each carburetor.

1-110. FUEL QUANTITY INDICATOR. A liquidometer fuel quantity indicator is installed on the main instrument panel to indicate the fuel quantity in the two main and the two auxiliary tanks.

1-111. TEMPERATURE INDICATING SYSTEMS. The temperature indicating systems supply the pilot with the necessary temperature data. The temperature indicating systems consist of the free air temperature indicating system, the engine oil temperature indicating system, the carburetor air temperature indicating system, and the engine cylinder temperature indicating system.

1-112. FREE AIR TEMPERATURE INDICATING SYSTEM. The free air temperature indicating system furnishes the crew with a true indication of the outside temperature. The system consists of an indicator located on the right side of the main instrument panel and a temperature bulb installed on the fuselage.

1-113. ENGINE OIL TEMPERATURE INDICATING SYSTEM. Two oil temperature indicators are mounted on the main instrument panel. On some airplanes, only one dual indicator is installed. A temperature bulb, located on the right side of each engine accessory case, furnishes oil temperature indications to the temperature indicator.

1-114. CARBURETOR AIR TEMPERATURE INDICATING SYSTEM. One dual carburetor air temperature indicator is installed on the right side of the instrument panel. Two thermometer resistance bulbs are installed, one in each engine carburetor airscoop assembly. The indicator is connected electrically to the resistance bulbs so that changes in the temperature of the carburetor will be shown on the indicator, by changes in the electrical current in the circuit between the bulb and the indicator.

1-115. ENGINE CYLINDER TEMPERATURE INDICATING SYSTEM. One dual engine cylinder temperature indicator is installed on the right side of the main instrument panel. On some airplanes, two single indicators are used. A thermocouple installed at the spark plug on each engine converts heat to electrical current which is transmitted to the indicator.

1-116. HYDRAULIC PRESSURE INDICATING SYSTEM. Two hydraulic system pressure gages, mounted in a bracket assembly below the right windshield at the co-pilot's station, are direct reading pressure-operated gages calibrated from 0 to 2000 psi.

1-117. PITOT-STATIC SYSTEM. The pitot-static system supplies static and ram air pressures necessary for operation of the velocity indicator, the airspeed indicator, and the altimeter. The system consists of two pitot-static tubes, mounted on masts located on the underside of the fuselage, a static selector valve, and the connecting tubing. The pitot static tube units are protected from ice by electrical heaters which are built into the units.

1-118. VACUUM SYSTEM. The vacuum system consists of a vacuum gage, two engine-driven pumps, two vacuum relief valves, two check valves, a vacuum manifold, two air filters, and the connecting tubing. The system provides for the operation of the autopilot, the turn-and-slip indicator, the directional indicator, and the attitude indicator.

1-119. OXYGEN SYSTEM. The oxygen system provides the crew and passengers with oxygen as required. Two types of systems are used. The low-pressure systems have a supply pressure of 400 psi. The systems are filled through an external valve, located forward of the main cabin door, using approved USAF equipment.

1-120. ELECTRICAL SYSTEM.

1-121. GENERAL DESCRIPTION. The basic electrical system consists of a 24-volt d-c, single-wire installation which receives power from two 12-volt batteries connected in series and from two 28-volt d-c engine-driven generators. There is a supplemental electrical system consisting of a 115-volt, 400-cycle a-c single-wire installation which receives power from an inverter. The airplane structure serves all electrical power systems as a ground return. Some airplanes have two main and one spare inverters.

1-122. BONDING. Bonding is the process of mechanically connecting certain metal parts in such a way that they will make a good electrical contact. The objectives of bonding are to provide a low-resistance current path for the electrical equipment which uses the airframe as a return circuit, to provide good conductivity between surfaces acting as shields, to reduce radio noise, and to eliminate fire hazards caused by static electricity generating and discharging in the form of sparks.

1-123. D-C POWER DISTRIBUTION. The 24-volt d-c power provided by the two batteries and two generators is distributed to the various electrical and electronic systems through the fuse or circuit breaker bus located in each firewall junction box. All wiring from the fuselage to the wings is connected through the terminal strips located in the left wiring tunnel. On some C-47 airplanes, all wiring is routed in conduit. On other C-47 airplanes, conduit is provided only for wiring from the engine section. On C-117 airplanes, all cabin wiring, ignition system wiring, and engine section wiring, with the exception of the generator circuits and the high-blower warning light circuits, are routed through conduit.

1-124. JUNCTION BOXES. Junction boxes are installed on all airplanes to provide access to the connection points for servicing the electrical systems. For detailed information, refer to Section VIII.

1-125. BATTERY SYSTEM. The battery system supplies 24-volt d-c power from two 12-volt batteries connected in series to the main electrical bus through a battery connector relay which is controlled by the master battery switch mounted on the pilot's center electrical control panel. External power supplied from a portable battery cart or rectifier, connects to the d-c bus through a receptacle mounted on the underside of the fuselage aft of the radio compass loop antenna.

1-126. EXTERNAL POWER RECEPTACLE. An external power receptacle, mounted under the fuselage just aft of the radio compass loop antenna, automatically connects an external power source to the airplane electrical system.

CAUTION

Be sure to turn the master battery switch off when using an external power source.

1-127. GENERATOR SYSTEM.

1-128. The generator system is the primary power source for the airplane's electrical and electronic equipment. Two engine-driven generators are connected in parallel through the reverse-current relays to the main bus. The generators are controlled by two voltage regulators which distribute the electrical load equally between the two generators. The generator system also consists of one shunt resistor connected to the negative terminal of each generator, two ammeters, two ammeter shunt resistors, two warning lights, two current limiters, and two generator main line switches.

1-129. GENERATOR. The generator installed on the accessory case of each engine is either 100 or 200 ampere capacity.

1-130. VOLTAGE REGULATOR. A voltage regulator for each generator circuit is located in the main junction box. The voltage regulator controls the generator voltage by varying the resistance in the field circuit.

1-131. A-C POWER. A-c power is supplied to the airplane as outlined in the following paragraphs.

1-132. ELECTRICAL INVERTERS.

1-133. A single-phase, 110-volt, 400-cycle inverter is installed on the floor below the radio operator's table and supplies a-c power to the electronic equipment. Some airplanes have two main and one spare inverters.

1-134. LANDING GEAR CIRCUITS. The landing gear warning light warns the pilot of certain malfunctions or unsafe conditions of the hydraulically actuated main landing gear. The landing gear safety circuit prevents inadvertent retraction of the landing gear when the airplane's weight is on the main gear. For further information, refer to Section XII.

1-135. RADIO.

1-136. GENERAL DESCRIPTION. Various types of radio equipment are used for communication, navigation, identification, altitude indication, and instrument landing. The electronic units are mounted on racks throughout the airplane. Remote control panels for operation of the equipment are located at the pilot's, co-pilot's, radio operator's, and navigator's stations. Antennas are installed in various locations.

1-137. POWER SOURCES. The basic electrical system consists of a 24-volt d-c, single-wire installation which receives power from two 12-volt batteries connected in series and from two 28-volt d-c engine-driven generators. There is a supplemental electrical system containing a 115-volt, 400-cycle a-c single-wire installations which receives power from either of two inverters. The airplane structure serves all electrical power as a ground return. Some airplanes have two main and one spare inverters.

1-138. VHF COMMUNICATIONS EQUIPMENT. The VHF communications equipment of the airplane is discussed in the following paragraphs.

1-139. AN/ARC-3 VHF RECEIVER-TRANSMITTER.

1-140. The AN/ARC-3 VHF receiver and transmitter unit provides short-range, two-way radio communication with other airplanes, or with ground stations. The AN/ARC-3 VHF receiving equipment consists of a receiver, a dynamotor, a radio control panel, and the necessary mountings.

1-141. T-67/ARC-3 TRANSMITTER-RECEIVER. The VHF transmitting equipment consists of a transmitter-receiver unit, a dynamotor, and the necessary mountings. The T-67/ARC-3 unit is installed in the main radio rack, and provides transmission on any one of the eight crystal-controlled frequencies within the range of 100 to 156 megacycles. The transmitter-receiver unit is mounted in a rack which serves as a mounting base. The unit transmits or receives when the control switch is actuated. The channel-control ratchet motor actuates a frequency shifter slide which automatically selects the correct crystal and tunes the circuit to the desired frequencies.

1-142. UHF COMMAND COMMUNICATIONS EQUIPMENT. UHF command communications equipment for the airplane is discussed in the following paragraphs.

1-143. AN/ARC-27 UHF COMMAND EQUIPMENT.

1-144. The AN/ARC-27 UHF command equipment provides voice communications over essentially line-of-sight distances on 18 preset, selected frequencies in the UHF band of 225.0 to 399.9 megacycles. The communications channels and a guard channel are preselected from a choice of 1750 possible frequencies spaced 100 kilocycles apart in the band. The unit can be remotely operated from the pilot's control panel. Transmission and reception are on the same frequency and by the same antenna. The equipment consists of three basic components: the receiver-transmitter, the radio set control unit, which provides the pilot remote control operation of the equipment, and the antenna.

1-145. LIAISON COMMUNICATION EQUIPMENT. The AN/ARC-8 liaison communication equipment is a long range or airplane-to-base radio set provided fc reporting the airplane's position and flight progress. It consists of a transmitter, receiver, dynamotor, and an antenna. The pilot's selector switch located on the upper instrument control panel, must be placed in the LIAISON position to operate the unit.

1-146. INTERPHONE SYSTEMS. The interphone systems are discussed in the following paragraphs.

1-147. AN/AIC-3 INTERPHONE SYSTEM. The AN/AIC-3 interphone system provides communication facilities for all the crew. It also permits the flight compartment crew members the use of the VHF command set, the liaison set, and all the receiving equipment. The interphone equipment consists of the following units: Four C-166/AIC-3 control boxes, each containing a vacuum tube serving as an isolation amplifier; a filter switch for the automatic compass; a control for transmission and reception; a volume control; and the microphone and headset jacks. A jack box is installed at the cargo door for interphone operation only. An AM-26/AIC-3 interphone amplifier completes the interphone equipment.

1-148. RC-36B INTERPHONE SYSTEM. The RC-36B interphone system, installed on some C-47 airplanes, provides communication facilities for the use of all crew members, and consists of one AM-26/AIC interphone amplifier, two AM-142 isolation amplifiers, five BC-1366M jack boxes, two 51C-2575 mixer boxes, and two filters.

1-149. VOR NAVIGATION EQUIPMENT. The ARN-14 VOR navigation receiver is designed to provide all the radio aids to navigation now available in the VHF range of 108.0 to 135.9 megacycles, utilizing 280 channels. This includes OMNI-directional range channels (112.0 to 117.9 megacycles), 90/150 localizer channels (108.0 to 111.9 megacycles), and two VHF visual aural range navigation channels (108.1 to 111.9 megacycles). The ARN-14 VOR navigation receiving equipment consists of a receiver, a dynamotor unit, three course indicators, one OMNI-bearing indicator, a control panel, and the necessary mountings.

1-150. RADIO COMPASS (ADF) EQUIPMENT. The AN/ARN-7 radio compass (ADF) utilizes signals transmitted from a range, commercial, or standard broadcast radio station to obtain directions or locational information. Under favorable conditions, a signal can be received several hundred miles from its origin. Some airplanes have dual AN/ARN-6 radio compass installations.

1-151. GLIDE SLOPE EQUIPMENT. The AN/ARN-18 glide slope equipment is designed to give vertical guidance to the pilot during landing operations when

visibility is poor. This equipment is part of a navigation system which provides both lateral and vertical guidance.

1-152. MARKER BEACON EQUIPMENT. The marker beacon receiver is installed in the main radio rack. Upon receiving a 75-megacycle signal from a ground transmitting station to the unit, an amber light located on the main instrument panel illuminates. The marker beacon equipment is used for instrument conditions on approach.

1-153. TACAN RADIO SET. Some C-47/C-117 Aircraft are outfitted with the AN/ARN-21 TACAN navigation system which provides indication of distance and bearing in relation to a known surface beacon within line of sight range up to 195 nautical miles. The radio set contains 126 fixed-frequency channels which are spaced 1 megacycle apart. Operation of the radio set is in the 1025 to 1150MC range for transmission and 962 to 1024 and 1151 to 1213 MC range for reception.

1-154. IFF RADAR EQUIPMENT. The AN/APX-6 or AN/APX-25 IFF radar equipment is used to identify the airplane as friendly when challenged by an interrogator responsor associated with friendly shore, ship, and airborne radars, and to permit surface tracking and control of airplanes in which it is installed. Functionally, the equipment receives challenges which are initiated by an interrogator responsor, and transmits replies back to the responsor, where the replies are displayed, along with the associated radar targets, on the radar indicators. When the radar target is accompanied by a proper IFF reply, the target is considered friendly. Provisions are also incorporated for destroying the IFF equipment in case of an emergency.

1-155. AUTOPILOT SYSTEM. The autopilot is a gyroscopically controlled, hydraulically actuated mechanism which maintains the airplane in lateral and longitudinal attitude, and in directional flight by operating the flight control surfaces. The operating mechanism consists of three interrelated systems: the vacuum supply system, which operates two gyroscopic control units, and simultaneously controls the hydraulic fluid pressure through the balanced fluid valves; a hydraulic pressure system, which operates the control surfaces by means of servo units in conjunction with the flight control cables of the rudder, ailerons, and elevators; and a mechanical followup cable system, which restrains the hydraulic servo action and prevents overcontrol. Each of the three systems depends upon the other two for proper operation. The gyroscopic control units, one for rudder directional control, and one for bank and climb, are mounted at the main instrument panel.

1-156. LANDING GEAR.

1-157. GENERAL DESCRIPTION. The landing gear consists of a retractable main wheel gear and a non-retractable tail wheel gear. The hydraulically actuated main landing gear consists of two independent units, one located in each nacelle area, designed to retract into the nacelle wheel wells. The tail wheel is full swiveling for taxiing or towing the airplane.

1-158. GROUND LOCKS. Ground locks are provided to prevent the main gear from collapsing while the airplane is on the ground. The ground locks are stowed in a canvas container in the main cabin compartment.

1-159. MAIN GEAR. The main single-wheel landing gear retracts forward and up into the nacelle of each wing. Each main gear consists of oleopneumatic struts, trusses, links, a yoke rear brace strut, hydraulic actuating cylinder, a bungee or compensator, a safety latch, warning light switches, wheels, and brakes. When the gear is fully retracted, the projecting ends of the axles are held against rubber bumpers built into the sides of the nacelles and only a small portion of the tire protrudes below the lower contour of the nacelle.

1-160. MAIN GEAR SHOCK STRUTS. Each main landing gear wheel is mounted between two pneumatic hydraulic shock absorber struts, which absorb the landing and taxiing loads imposed upon the airplane. Landing loads are absorbed mainly by forcing the hydraulic fluid contained in the strut through an orifice located in the lower cylinder of the strut. Taxiing loads are absorbed by the compression of the air present in the upper chamber of the strut. Piping routed between the two struts aids in balancing the air pressure.

1-161. MECHANICAL SAFETY LATCH SYSTEM. A spring-loaded mechanical safety latch is installed in each nacelle on the forward side of the wing front spar. The unit automatically latches when the landing gear is fully extended by engaging a slot in the lower end of the actuating cylinder piston rod. Latches for both gears are controlled simultaneously by cables connected to a single control handle located on the floor to the right of the pilot's seat.

1-162. BUNGEE. The bungee, used on early airplanes, consists of six loops of elastic shock cords, mounted on a forward yoke that is connected to the upper truss by a rod, and on the aft yoke mounted in the rear area of the nacelle. The bungee cords are extended by the extension of the landing gear and aid in balancing the weight of the landing gear. The bungee also assists the landing gear actuating cylinder to retract the landing gear.

1-163. HYDRAULIC COMPENSATOR. On later airplanes, the landing gear bungee installation was replaced by a hydraulic compensator to assist the landing

gear actuating cylinder in providing faster retraction of the landing gear. The compensator is a hydraulic cylinder assembly bolted to a bracket on the front wing spar, with the cylinder rod attached to the landing gear upper truss. The compensator is connected to the landing gear hydraulic UP piping with a flexible hose.

1-164. LANDING GEAR POSITION INDICATING AND WARNING SYSTEM. The landing gear position indicating and warning system consists of the landing gear control valve, landing gear indicator lights, and the landing gear warning horn.

1-165. WHEELS AND AXLES. The main landing gear wheels, interchangeable right and left, are of the flat-base, rim type, and are cast of aluminum alloy. The wheel assembly consists of four major parts; the wheel casting, demountable rim flange, brake drums, and the axle assembly. The split-type demountable rim flange is attached to the wheel casting by a key and special locking bolts.

1-166. BRAKE ASSEMBLIES.

1-167. Hydraulically actuated dual brakes are installed on each main landing gear wheel. Each brake is bolted to a brake torque collar which is bolted to the wheel. Braking pressure is applied independently, or simultaneously, by toe pressure on the rudder pedals.

1-168. FLIGHT WHEEL BRAKE. A flight wheel brake is secured to the lower rear face of the firewall in each nacelle and consists of a length of heavy flexible belting faced with small steel or non-ferrous plates. As the landing gear is retracted into the nacelle, the flexible brake contacts the tire tread and stops the rotation of the wheel.

1-169. MAIN GEAR TIRES. The main landing gear wheels accommodate 10-ply, 45 x 17:00-16 tires with Type I inner tubes.

1-170. TAIL WHEEL.

1-171. The tail wheel is a magnesium-alloy casting, mounting a 22 x 9:00-8, 8-ply tire and a Type III heavy duty inner tube. The wheel and tire are mounted in the tail wheel fork with a straight pin-type axle.

1-172. TAIL WHEEL GEAR. A full swiveling, non-retracting tail wheel is installed on the airplane. Major components of the tail wheel gear consist of the wheel and axle assembly, tire, oleopneumatic strut, fork, spindle, and tail wheel locking device.

1-173. TAIL WHEEL SHOCK ABSORBER STRUT. The tail wheel shock absorber strut is attached at the upper end to the spindle and at the lower end to the tail wheel fork. Impact loads on the tail wheel strut are absorbed by forcing the hydraulic fluid present in the strut assembly through a restricted opening in the strut piston. Taxiing loads are absorbed by the compression of the air present in the upper chamber of the strut.

1-174. TAIL WHEEL LOCKING MECHANISM. The spring-operated lock at the tail wheel consists of a key and slot mechanism with the slot located on the spindle and the key hinged to the fuselage structure. The key is released from the slot by the control cable connected to the control handle located on the control pedestal, allowing the tail wheel to turn freely for towing or taxiing the airplane.

1-175. FLIGHT CONTROL SYSTEM.

1-176. GENERAL DESCRIPTION. The movable surfaces of the airplane, controlled by the pilot and co-pilot, consist of the wing flaps, rudder and trim tab, elevator and trim tab, and the aileron and tab (tab on the right aileron only). All movable surfaces are operated manually, except the wing flaps which are hydraulically operated. The autopilot system provides automatic control as required. External off-neutral control locks are installed to prevent damage to the control surfaces and linkage from gusts and high-velocity wind when the airplane is parked.

1-177. WING FLAPS.

1-178. Four metal wing flaps of split trailing-edge-type are provided. The wing flaps, which are hydraulically operated, extend between the inboard ends of the ailerons and function as a single unit, are hinged to the structure on the underside of the airplane.

1-179. RUDDER CONTROL SYSTEM. The rudder control system consists of the rudder, the rudder trim tab, rudder pedals, and the connecting cables. Rudder movement is controlled by the rudder pedals, which are adjustable forward and aft to accommodate pilots of varying stature.

1-180. RUDDER.

1-181. The rudder is constructed of aluminum alloy, which is fabric covered, and is statically and dynamically balanced by weights which are installed in the assembly as required.

1-182. RUDDER TRIM TAB.

1-183. A trim tab is installed on the trailing edge of the rudder and is operated by cables from a crank assembly mounted on the pilot's control pedestal. A graduated dial indicator located on the pedestal indicates the degree of the tab setting.

1-184. ELEVATORS. The two elevators consist of aluminum alloy frames covered with fabric. Each elevator assembly is hinged to the horizontal stabilizer at two points and is counterbalanced by means of weights installed in the structure.

1-185. ELEVATOR TRIM TABS.

1-186. An elevator trim tab is installed on the trailing edge of each elevator and controlled by a wheel located on the control pedestal. Forward rotation of the wheel raises the tab which moves the elevator and the airplane nose down in flight. Rotation of the wheel aft lowers the tab which raises the elevator and the nose of the airplane in flight.

1-187. CONTROL COLUMN.

1-188. Forward and aft movement of the control column operates the elevators. Forward travel of the control column is limited by an adjustable stop located on the fuselage structure in the path of the torque-tube horn. Travel of the column aft is limited by stop bolts located on the upper elbows of the control column.

1-189. AILERONS. The ailerons consist of aluminum alloy frames covered with fabric. Each aileron is hinged to the wing structure at six points and is counterbalanced by means of weights built into the aileron structure. An adjustable metal trim tab is installed on the right aileron only. A fixed tab, consisting of a metal strip, is installed on the trailing edge of the left aileron.

1-190. AILERON CONTROLS.

1-191. The ailerons are controlled by dual control wheels mounted on the dual control column. Wheel movement is transmitted to the aileron cables by a sprocket and chain installed on the shaft of each control wheel.

1-192. AILERON TRIM TAB.

1-193. The right aileron is equipped with a movable trim tab which is operated by a crank located on the control pedestal. Clockwise rotation of the crank lowers the tab, forcing the aileron up and the wing down when the airplane is in flight. Counterclockwise rotation of the crank raises the tab, forcing the aileron down and the wing up.

1-194. WIRING.

1-195. WIRING DATA. Airplane wiring data provides maintenance personnel with information concerning the wiring of electrical and electronic equipment in the airplane. Wiring and wire specifications, wiring symbols, wiring diagrams, and an alphabetical index of the wiring diagrams are contained in Section XII.

1-196. WIRE IDENTIFICATION. The number and letter system for electrical wire identification is shown on the wiring diagrams for the airplane. For further information concerning wire identification, refer to Section XII.

1-197. WIRING. Wire sizes in the electrical system range from No. 0 to No. 22 gage. The size of an electrical wire decreases as the gage number increases; No. 0 is the largest wire and No. 22 the smallest.

1-198. TERMINAL CONNECTORS. Wire junctions which do not terminate in pin-and-socket type connector plugs are lugged for fastening to the terminal strips using solderless connectors. For information concerning the installation of terminal connectors on electrical wiring, see Section XII.

1-199. MISCELLANEOUS WIRING DATA. Miscellaneous wiring data, including electrical wiring repair, soldering, bonding, bonding parts with conducting finishes, bonding parts with nonconducting surfaces, and bonding dissimilar metal contacts, are contained in Section XII.

SECTION II

GROUND HANDLING

2-1. GROUND HANDLING.

2-2. GENERAL DESCRIPTION. Provisions are made for hoisting, jacking, leveling, parking, mooring, towing, and servicing the airplane, as outlined in the following paragraphs.

CAUTION

- Care must be taken at all times to prevent scratches, dents or abrasions on airplane surfaces. Whenever possible, soft soled shoes without nails, or cloth covers over boots should be worn while walking or standing on surfaces.

- Do not walk or stand on wing outboard of outer wing station 125 or any part of the horizontal stabilizer.

2-3. HOISTING PROVISIONS.

2-4. GENERAL DESCRIPTION. Provisions are made for hoisting the complete airplane, the fuselage, the outer wing panel, the horizontal stabilizer, the vertical stabilizer, the rudder, the engine assemblies, and the propellers. Various types of slings are required in hoisting. They may be obtained by requisition through channels from supply depots.

CAUTION

In every case, the capacity and suspension of overhead hoisting equipment must be carefully checked before it is used, and specific authority for its use must be obtained from the squadron engineering officer.

2-5. HOISTING COMPLETE AIRPLANE. Five permanently installed fittings are provided to lift the complete airplane with three separate hoists *(see figure 2-1)*. Two hoists, one attached to a sling at either nacelle, lift the forward section, while a single hoist lifts the tail section. Each nacelle hoist is attached to a two-cable sling, as shown in figure 2-2. Inside the nacelle are two fittings to which the cables are fastened. The fittings are bolted to the top of each main landing gear strut, which in turn is secured to the front spar of the center wing section. Figure 2-7 shows a nacelle fitting with a sling cable attached. Wing stands (see paragraph 2-23) are often used with the hoists. The tail hoist is hooked to a permanently installed cable which is bolted to the fuselage structure at station 583, located in the fairing forward of the vertical stabilizer. Figure 2-8 shows the tail hoist hooked into this fitting. Shown in figure 2-1, this same fitting is used when only the fuselage is hoisted. A tail stand is useful in the hoisting procedure (see paragraph 2-22). Access to the five fittings used with these three hoists is gained by removing the cover plates. Two of these plates are located near the top of each nacelle, and the third is located on top of the fuselage forward of the vertical stabilizer.

2-6. HOISTING FUSELAGE. Two hoists are used to lift the fuselage *(see figures 2-3 through 2-7)*. Refer to figure 2-1 to determine the location of these hoisting points. The forward hoist is hooked to a two-cable sling which is attached by clevis bolts to permanent shackles on either side of the fuselage station 222. This station is located forward of the auxiliary spar of the center wing section. The aft hoist is hooked to a permanently installed cable at station 583, which is forward of the vertical stabilizer *(see figure 2-8)*. This location is also indicated in figure 2-1. Use a tail stand for supporting the tail of the airplane (see paragraph 2-22). Before attempting to hoist the fuselage, remove all cargo, furnishings, and equipment from the interior to prevent buckling of the fuselage sides.

2-7. HOISTING OUTER WING PANELS. *(See figures 2-9 and 2-10.)* Two types of slings are provided to hoist the outer wing panel. The type of sling to be used depends on whether the panel is equipped with four sling fittings, as on earlier airplanes, or with eight sling fittings, as on later airplanes. Figure 2-9 shows a four-cable sling in operation. The four points of attachment *(see figure 2-1)* are plugged with flathead screws when the sling is not installed. These screws are replaced by tee screws attached to the ends of the four sling cables when preparations are made for hoisting. Figure 2-9 shows one of these cables attached to the panel. Tighten the screws snugly into the panel to prevent bending and breaking. The sling equipped with eight fittings is also lifted by four cables, and is similarly installed with screws. It distributes the

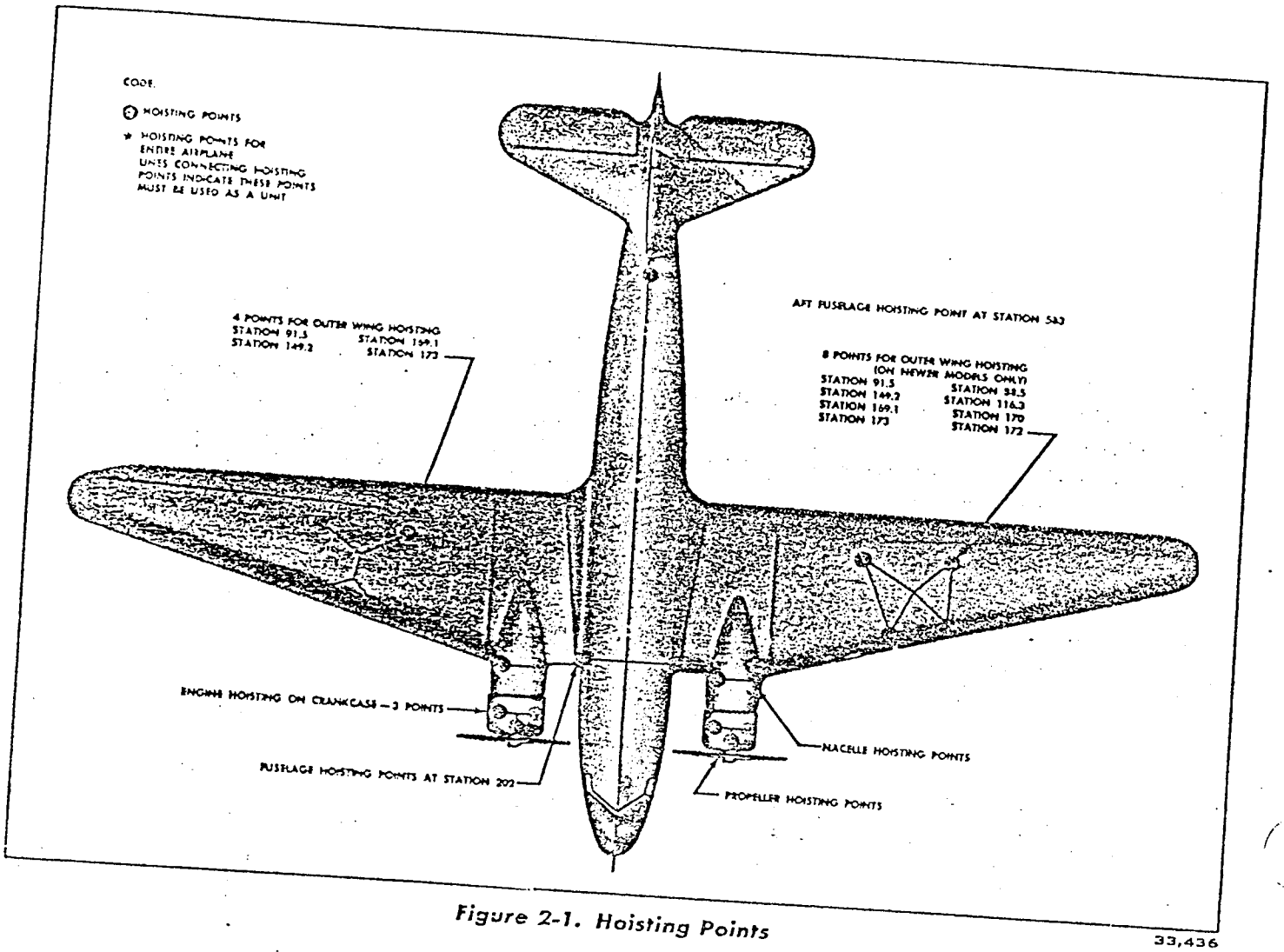

Figure 2-1. Hoisting Points

33,436

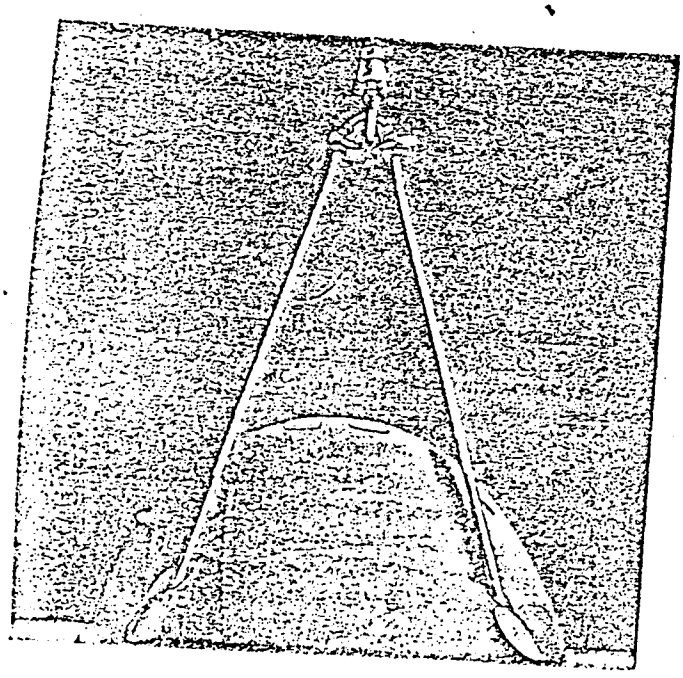

Figure 2-2. Two-Cable Nacelle Sling

stresses more evenly over the wing surface during hoisting than the older type of sling.

2-8. HOISTING HORIZONTAL STABILIZER. A four-cable sling, shown in figure 2-11, is used to facilitate the installation or removal of a horizontal stabilizer.

Note

Four to six men are required to accomplish this operation manually.

2-9. HOISTING VERTICAL STABILIZER. A two-chain sling, with a fabric loop *(see figure 2-12)* is used in the installation or removal of the vertical stabilizer.

Note

Four men are required to accomplish this operation manually.

2-10. HOISTING RUDDER. This rudder can be handled during installation or removal by means of a loop-type sling and a hoist *(see figure 2-13)*.

2-11. HOISTING ENGINE ASSEMBLY. The engine assembly is lifted by attaching a sling to three hoist

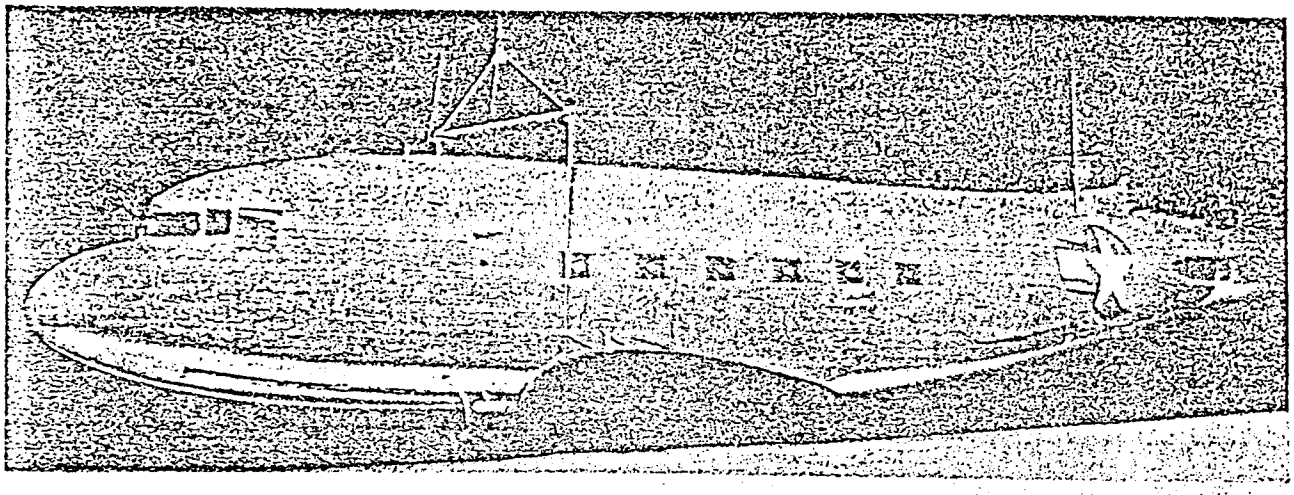

33,438

Figure 2-3. Hoisting Fuselage

fittings provided on the engine crankcase *(see figure 2-14).*

CAUTION

Before attempting to hoist an engine assembly, carefully inspect the entire hoisting equipment.

2-12. HOISTING PROPELLER. Two slings are available to lift the propellers. One is a two-loop sling used in lifting a propeller from a vertical position, as shown in figure 2-15. The other sling is constructed with three loops and is used in raising a propeller from a horizontal position, as shown in figure 2-16.

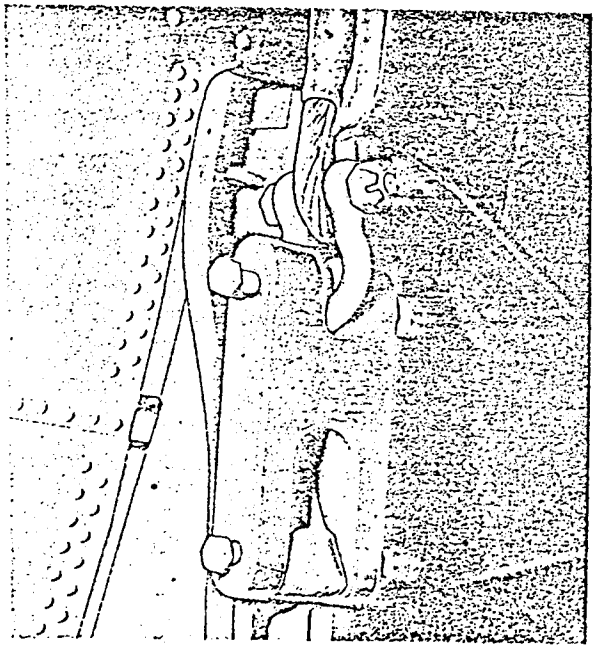

33,439

Figure 2-4. Sling Attached to Fuselage Fitting

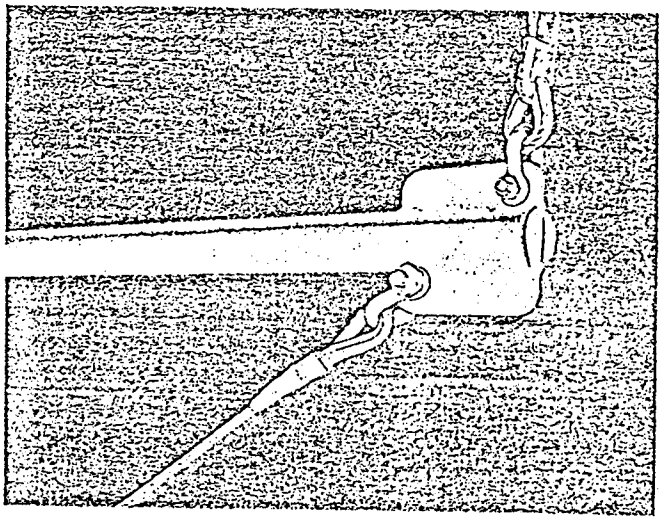

33,440

Figure 2-5. Spreader Attachments of Fuselage Sling

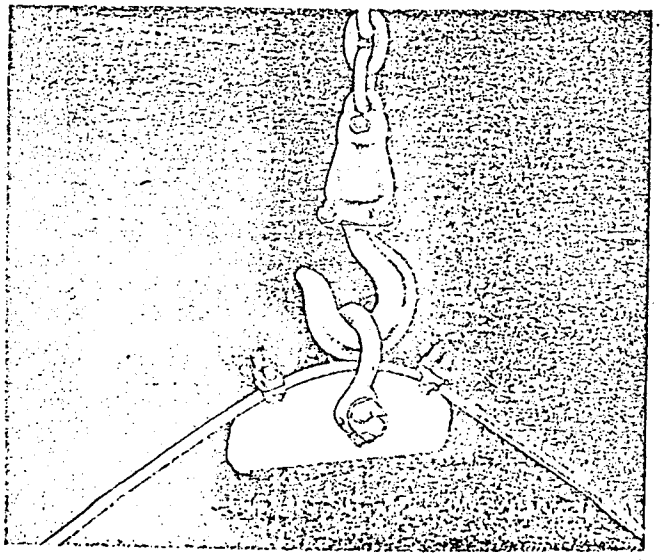

33,441

Figure 2-6. Inverted Vee of Fuselage Sling

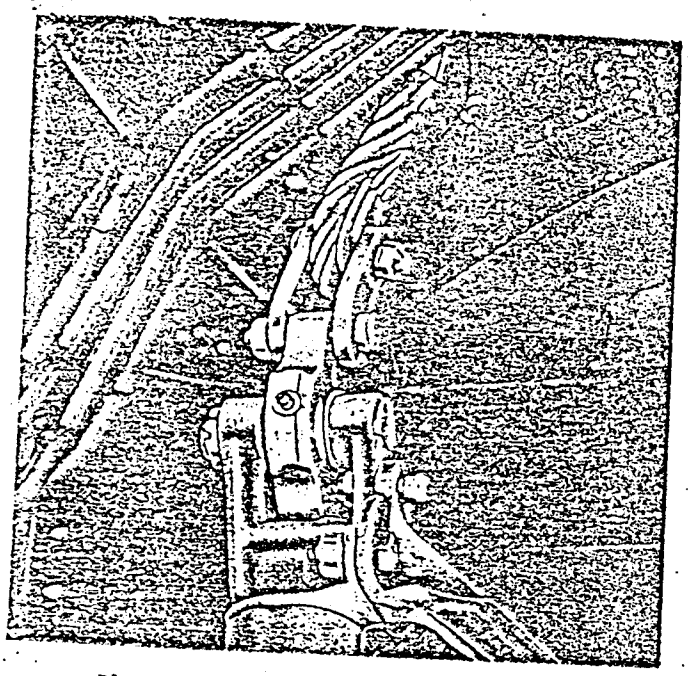

Figure 2-7. Nacelle Fitting with Sling Cable Attached 33,442

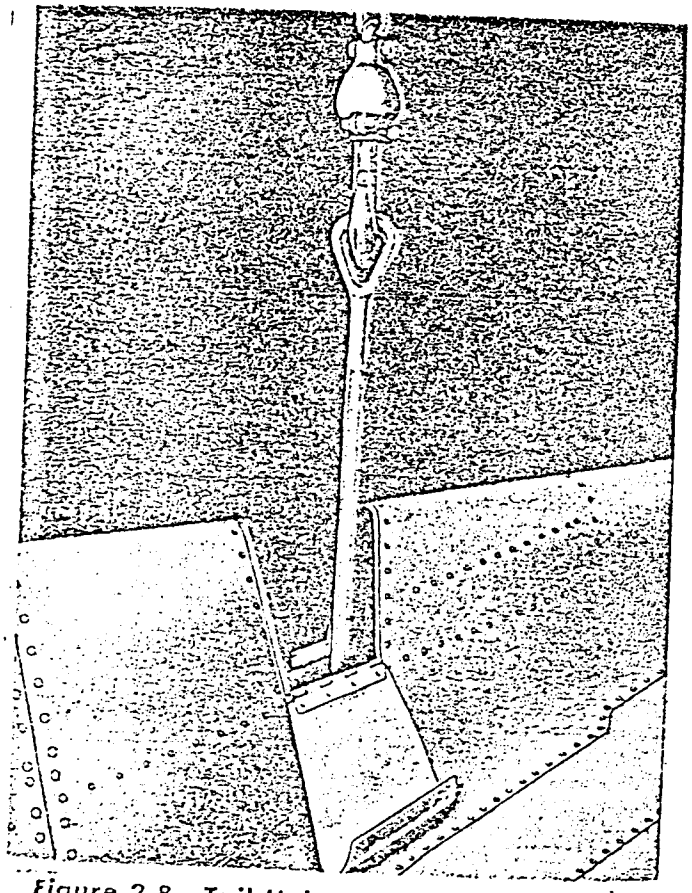

Figure 2-8. Tail Hoist Hooked to Permanent Fitting 33,443

-13. JACKING PROVISIONS.

-14. GENERAL DESCRIPTION. Both forward and aft ctions of the airplane are raised by jacks at points which are protected with jack pads. The forward section is raised by using either of the two sets of jacking points, and an alternate emergency method of raising a single main wheel is also provided. The tail section is raised by using only one jacking point. The location of all jacking points is indicated in figure 2-17.

2-15. JACKING PRECAUTIONS.

a. Do not attempt to jack the airplane when it is on uneven ground. Move the airplane to a level area and place the jacks on a level surface.

WARNING

Landing gear struts will not be inflated to assist in aircraft jacking.

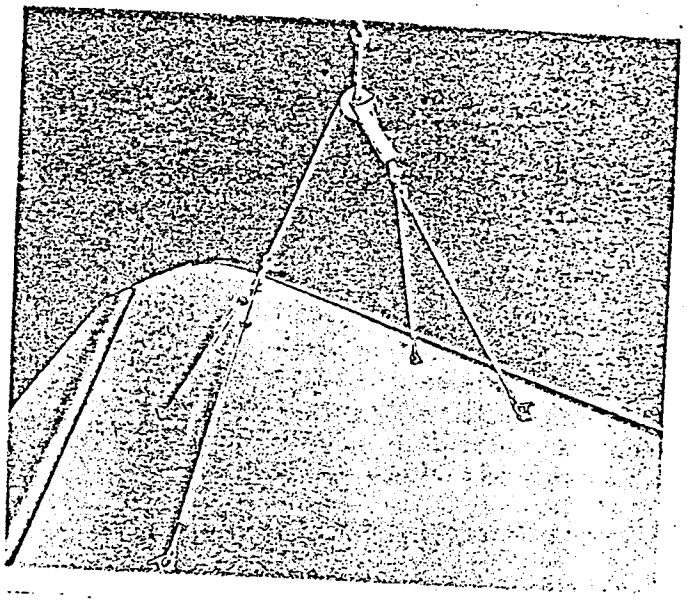

Figure 2-9. Four-Cable Outer Wing Sling

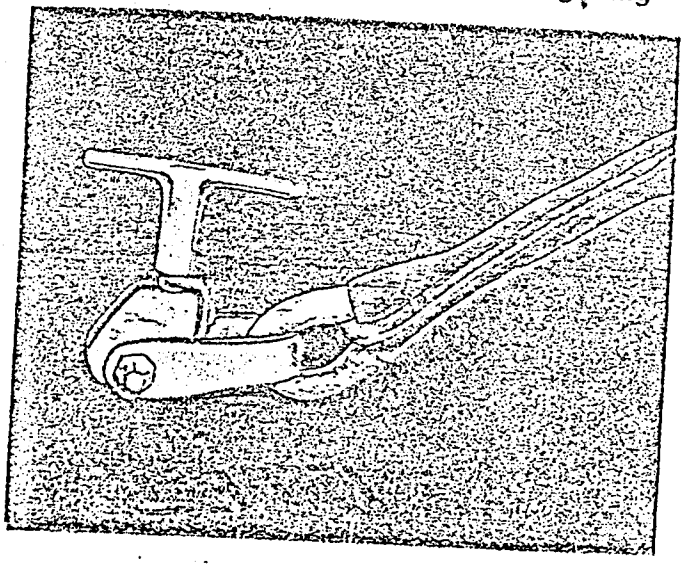

Figure 2-10. Sling Cable Attached to Outer Wing Panel 33,445

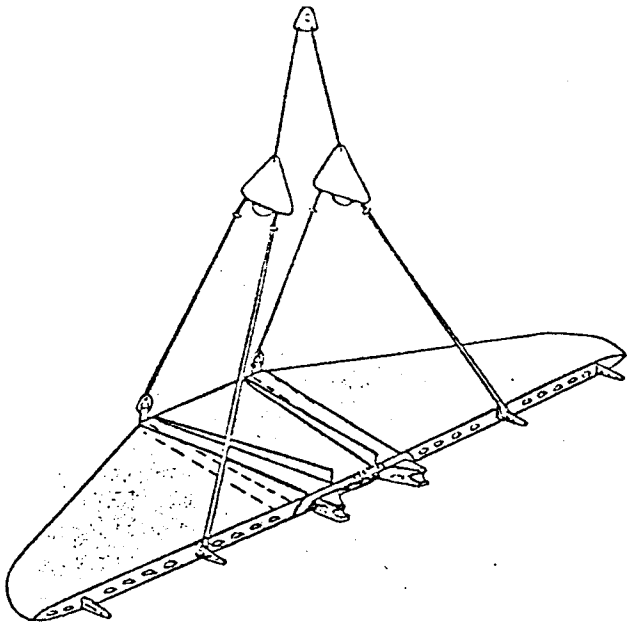

33,446

Figure 2-11. Hoisting Horizontal Stabilizer

b. Head the airplane downwind.

c. Do not attempt to jack the airplane when the wind is more than 15 miles an hour.

d. If the airplane is to be unattended for any length of time while supported, remove ladders or other equipment which will damage the airplane. Also, safety the wing jacks with pins.

e. Provide protection in the form of suitable trestles, stands, shoring, chain hoists, or other supporting devices when wing jacks are to be used in such a manner that failure of a jack could result in injury to personnel; damage to the airplane or other property, or removal of airplane parts, such as stressed skin plates. All supporting devices applied to the under side of the airplane will be of the required height, will be padded in the areas contacting the airplane, and will have sufficient supporting surface to allow support of the airplane without damage. Overhead supports such as chain hoists will be attached only to those upper

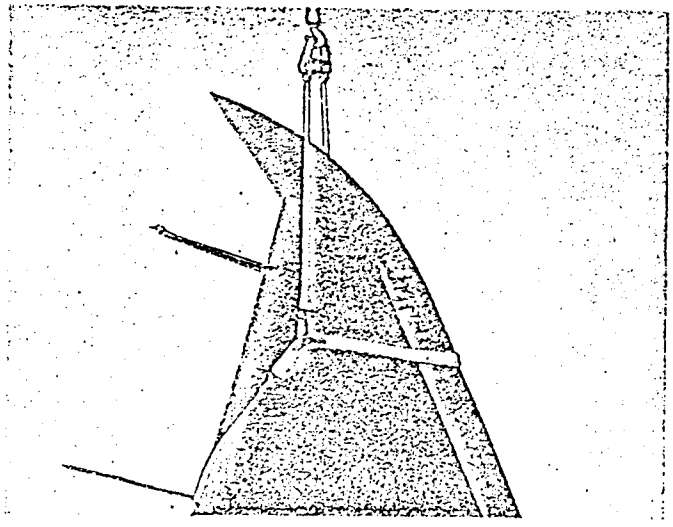

33,447

Figure 2-12. Hoisting Vertical Stabilizer

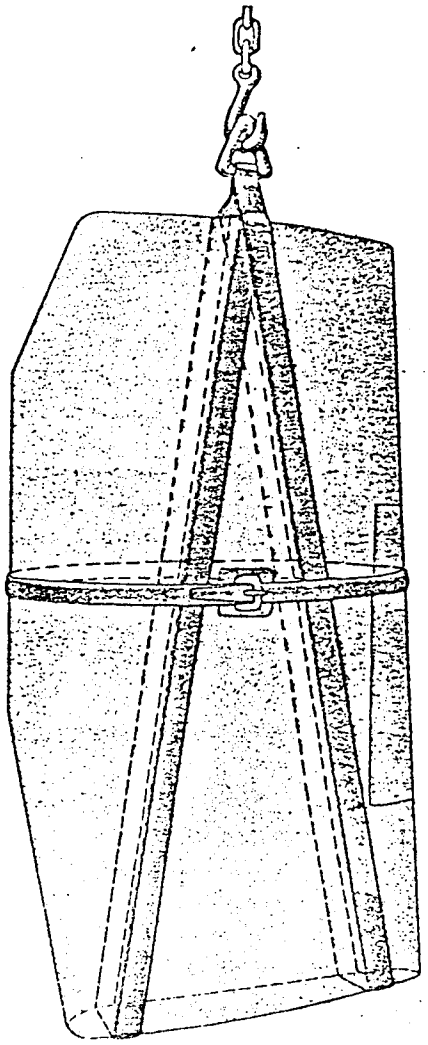

33,448

Figure 2-13. Hoisting Rudder

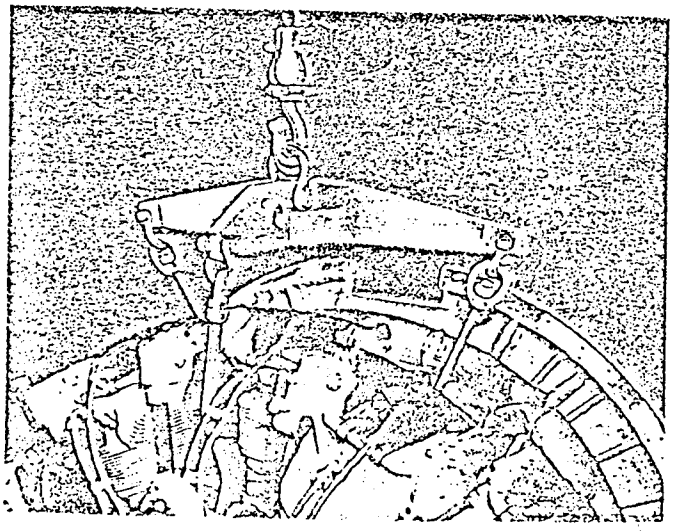

33,449

Figure 2-14. Engine Assembly Sling

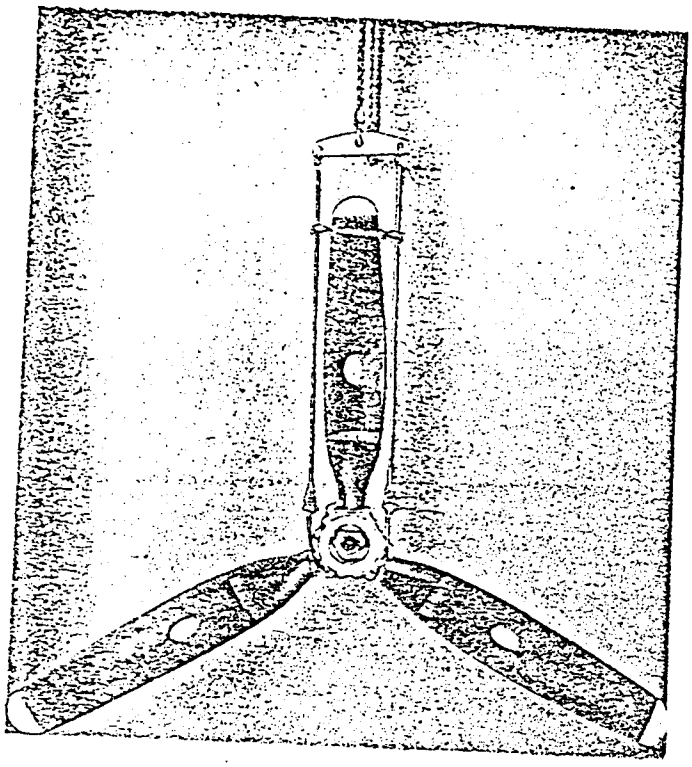

Figure 2-15. Two-Loop Sling Lifting Propeller in Vertical Position

portions of the airplane which are designated as lifting points.

f. Secure the airplane to prevent yawing movements while it is on jacks.

g. When jacking the forward section and tail section in one procedure, raise both sections evenly so that the fuselage remains approximately in the normal inclined position. Excessive lifting of either the forward jacks or the tail jack tends to unseat the jacks.

h. When jacking the forward section only, make provisions for the tail wheel to move ahead as the forward section is raised.

2-16. JACKING FORWARD SECTION USING WING JACKS.

CAUTION

Lock the tail wheel and release the parking brakes when either the forward or the tail sections of the airplane are jacked.

Wing jacks provide a method of jacking the forward section of the airplane. Before wing jacking is attempted, strip the airplane of cargo and sufficient fuel so that the airplane gross weight does not exceed 26,000 pounds. One wing jack is positioned under each wing so that both sides are raised simultaneously *(see figure 2-18)*.

CAUTION

Do not attempt to raise the forward section of the airplane with only one wing jack. Install both wing jacks and raise both sides of the forward section simultaneously. Remove the exhaust tailpipe assembly before positioning the wing jack.

The two main jack pads are located on the bottom surface of the center wing section outboard of each nacelle, under the front spar *(see figure 2-19)*. Most wing jacks are equipped with braces which, in addition to engaging the main jack pad, also engage two jacking points approximately 36 inches aft of each main jack pad. The wing jacking points on one side of the airplane are shown in figure 2-17. The two aft positions are plugged with screws. These screws are removed when a jack with two lifting braces is used so that the braces are attached to the center spar.

Note

When using a wing jack with a single lifting surface, always engage it with the main jack pad. The two auxiliary jacking points on the center spar are used only when jacks are equipped with auxiliary lifting braces.

Figure 2-18 shows a wing jack installed. The jack stand may be used as a shoring device if the safety pin is first placed in position so that the jack can be removed. Always insert the safety pin as a precaution against hydraulic failure after the airplane has been raised to the height required, even though the jack is not removed from the stand assembly.

CAUTION

Slowly lower the weight on the safety pin to prevent shearing of the pin. Be sure that the jack supporting stands and any other equipment used in the jacking procedure are of sufficient capacity to safely support the airplane.

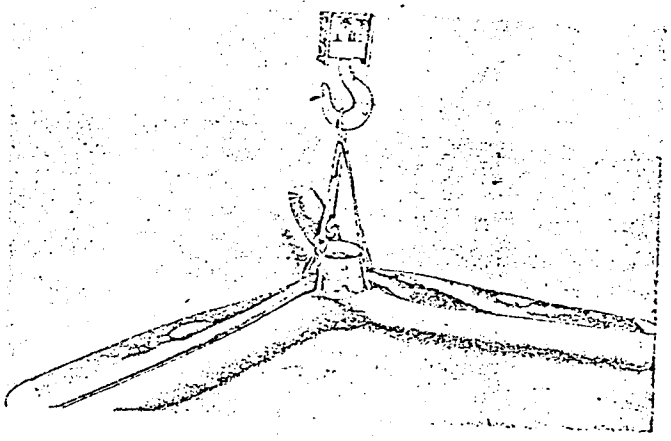

Figure 2-16. Three-Loop Sling Lifting Propeller in Horizontal Position

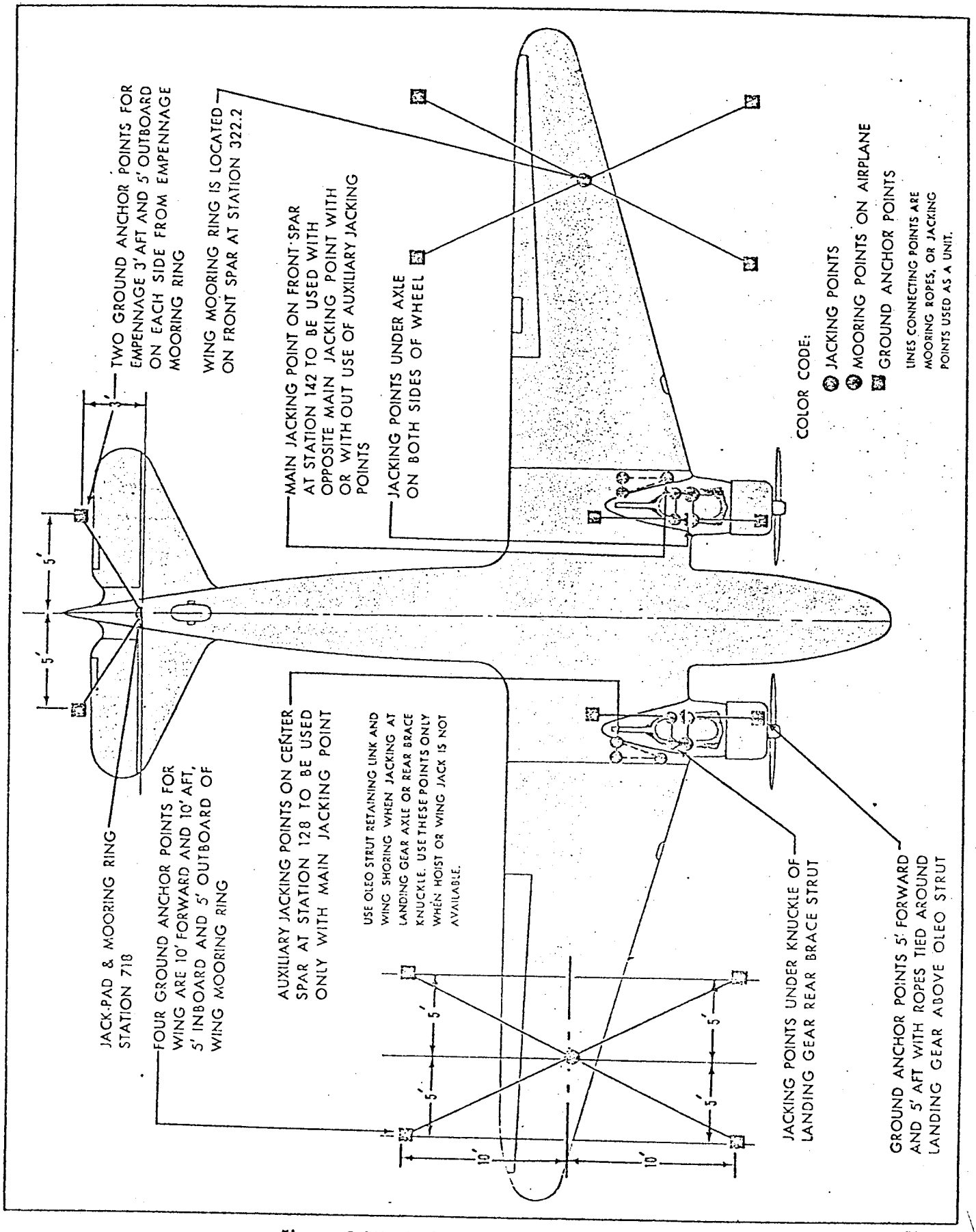

Figure 2-17. Jacking and Mooring Diagram

33,452

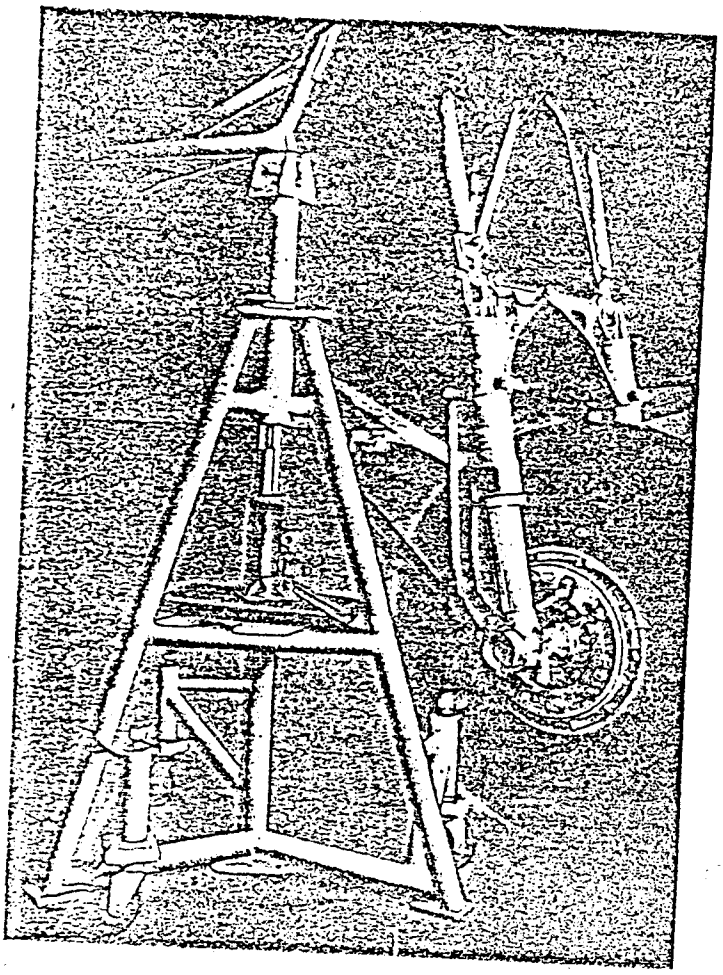

Figure 2-18. Wing Jack Installed 33,453

2-17. The shock strut restraining assembly is used with the wing jacks. These link assemblies conserve jacking range, which increases jacking stability.

CAUTION

Do not attempt to raise a main wheel by landing gear brace strut jack pads unless wing shoring is used as a safety precaution.

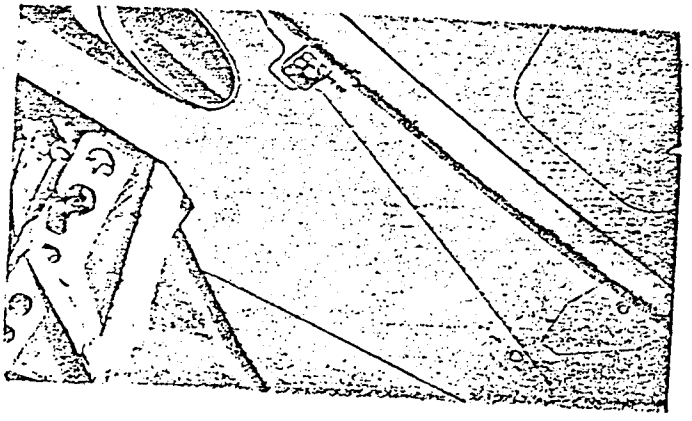

Figure 2-19. Wing Jack Pad and Two Auxiliary Lifting Points 33,454

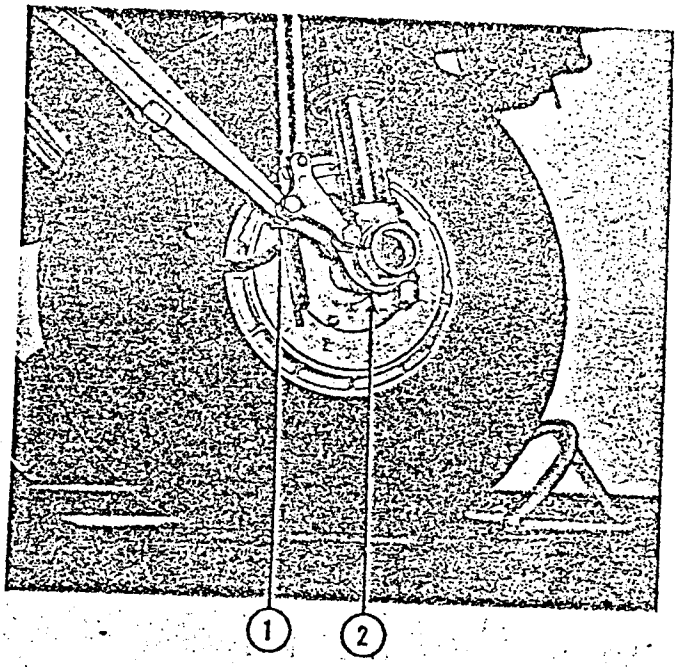

Figure 2-20. Main Landing Gear Jacking Points 33,455

Key to Figure 2-20

Item	Nomenclature
1.	Rear Brace Strut Jacking Point
2.	Main Gear Axle Jacking Point

It is impossible to retract a landing gear when its rear brace strut is used for support. Many other jobs, such as servicing wheel bearings, tires, and brakes, can be satisfactorily accomplished when a main wheel is raised by this method. It is necessary to install a shock strut restraining link assembly when the knuckles at the forward ends of a rear brace are used as jacking points *(see figures 2-17 and 2-20)*.

CAUTION

Do not attempt to jack a main wheel by the knuckles at the forward ends of the landing gear rear brace without first installing the two oleo strut restraining link assemblies.

2-18. SHOCK STRUT RESTRAINING LINK ASSEMBLY.

2-19. The shock strut restraining link assembly, shown in figures 2-21 through 2-25, is installed and used when the forward section is raised by wing jacks, or when a wheel is raised by short jacks placed under the forward wye ends of the rear brace strut. One end of the assembly is hooked into the top of the air-oil shock strut and the other end is bolted to the upper half of the main axle housing after the bottom half has been disengaged. Figure 2-22 shows two of these assemblies in-

stalled, one forward of each shock strut. These assemblies must always be installed in pairs, shown in figure 2-22. Figures 2-23 and 2-24 show the jack installed under the rear brace strut jack pads.

CAUTION

In all cases, shock strut restraining link assemblies are installed in pairs, one for each of the two shock struts on each main wheel. Deflate the shock struts before jacking the airplane.

Shock strut restraining links have two separate functions. They prevent the shock struts from distending when upward pressure is applied to the jacking points at the knuckles of the rear brace strut; therefore, because of a leverage action between the shock struts and the knuckles, they prevent the knuckles from raising without lifting the main wheel. If shock strut restraining links are not installed and an attempt is made to raise the main wheel by its rear brace strut jack pads, the effect is to raise the rear brace strut ends at an angle outward from the vertical lifting force of the jacks until the jacks finally become unseated. These restrainers also are useful when wing jacks are used, by keeping the shock struts from extending (due to the weight of the wheel) when upward pressure is applied to the wing jack pads. As a result, the wheel rises from the ground immediately after the wing jack is put in operation, thus reducing the lifting range of the jack.

Note

Since it is necessary to disengage the bottom half of the axle housing in order to install a shock strut restraining link, it is impossible to make a thorough check of landing gear operation while these restraining link assemblies are installed because this check requires that the wheels be mounted. Therefore, do not use restraining link assemblies when a thorough check of the landing gear is accomplished.

Two shock strut restraining link assemblies are stowed in the airplane on the forward wall of the aft cargo bulkhead *(see figure 2-25)*.

2-20. JACKING AT MAIN WHEEL AXLES. When wing jacks or hoists are not available, use two short jacks under the main wheel axle. The jacking points for this procedure are located at the bottom of the axle housing, below the shock strut as shown in figures 2-19 and 2-26. When the gear is raised in this manner, servicing jobs are limited, since the axle housing is trapped by the jacks, and it is not possible to remove a main wheel.

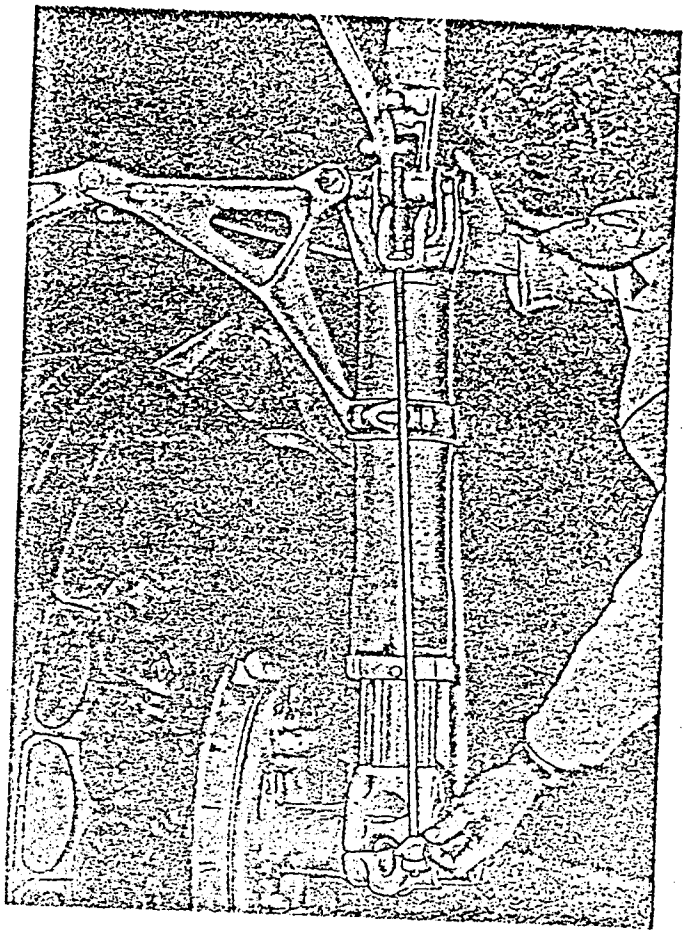

33.456

Figure 2-21. Installing Shock Strut Restraining Link

2-21. JACKING TAIL SECTION. Raise the tail section by engaging a jack with the jury tail skid, which is a permanently installed casting located on the bottom of the fuselage forward of the tail cone *(see figure 2-17)*. To increase jacking stability, a jack cone, as shown in figure 2-27, is attached to the permanent fitting. This cone is stowed in a canvas container *(see figure 2-25)* on the forward side of the aft cargo bulkhead. Figure 2-28 shows the tail jack in lifting position with the auxiliary jack pad installed. It is difficult to jack the tail section to any great height when the forward section is not raised at the same time. The top of the jack moves aft as it raises, and in order to counteract this action, the jack is slanted slightly forward before it is put into operation. Do not jack the tail section any higher than 5 to 7 inches to service the tail landing gear. When raising the tail section so that the airplane is in the level flight position required for weighing, a tail hoist *(see figure 2-8)* should be used.

CAUTION

Do not attempt to jack the tail section up to the airplane level flight position required for weighing. Use a hoist in place of a jack.

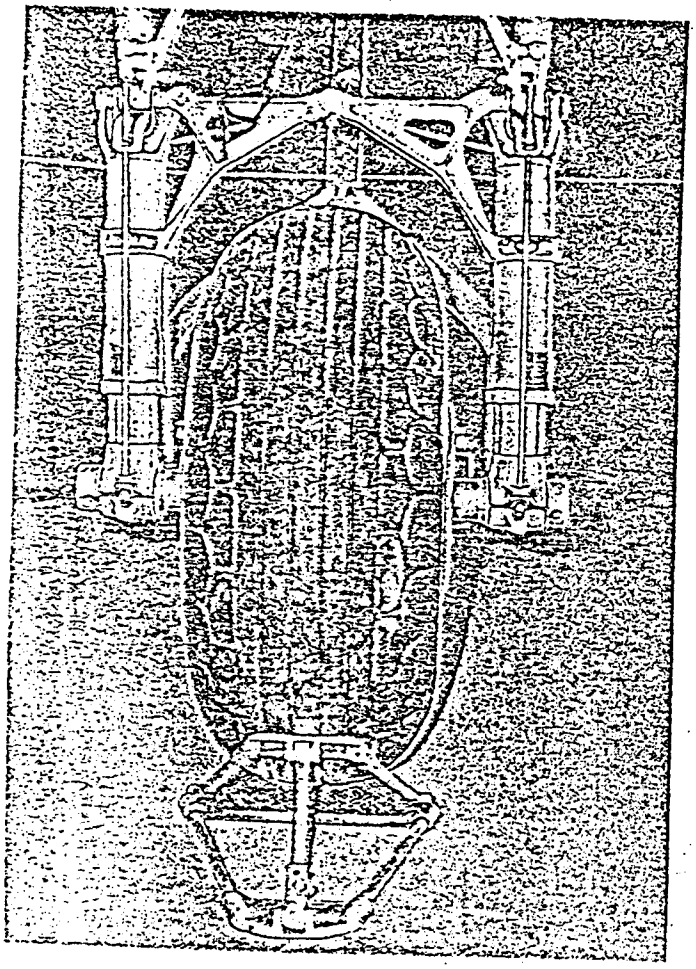

33,457

Figure 2-22. Two Shock-Strut Restraining Links Installed

Do not use the Tail Jack Cone to jack or support the airplane when horizontal stabilizer is removed.

2-22. TAIL STAND. A collapsible tail stand is available to support the tail section, as shown in figure 2-29.

2-23. SHORING METHODS. In addition to wing stands, and tail stands, as shown in figures 2-29 and 2-30, other suitable methods of shoring include the following:

a. Heavy timber cribbing with top members felt padded and snugly fitted under the wing spars along a 3- or 4-foot span.

b. Large felt padded timbers fitted to the chordwise contour of the wing, extending several inches to the front and rear spars, and supported with wooden horses or stands of sufficient strength.

c. Suitable strong benches upon which sand bags have been placed to bear against the wing spar.

CAUTION

Place shoring under the center wing section *only*. Locate it so that it does not interfere with the retraction of the landing gear.

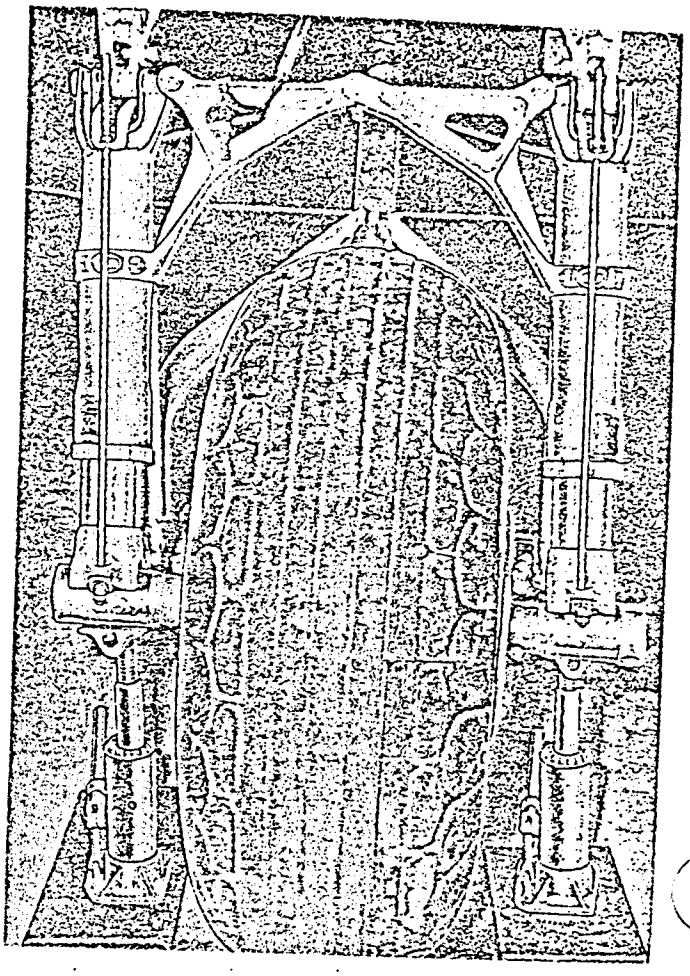

33,458

Figure 2-23. Jacks Installed at Knuckles of Rear Brace Strut

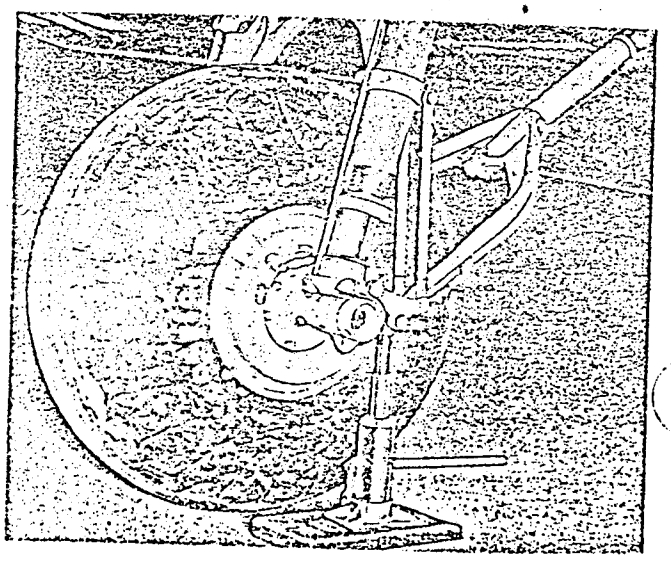

33,459

Figure 2-24. Wheel Ready for Removal

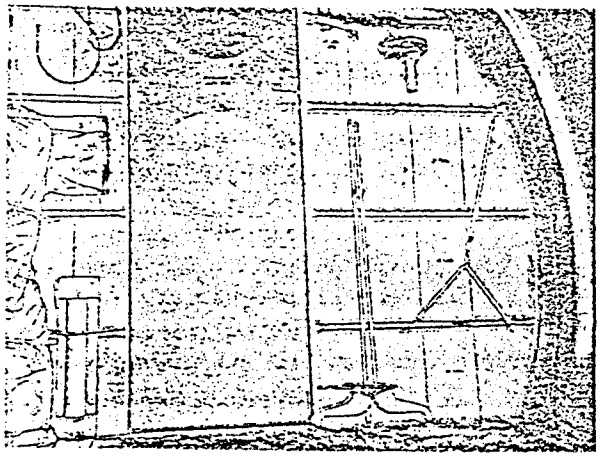

33,460

Figure 2-25. Shock Strut Restraining Links Stowed

2-24. TOWING.

2-25. GENERAL DESCRIPTION. Tow the airplane from the front by attaching tow lines to the main wheel axles as shown in figures 2-31 and 2-32, or tow from the tail by attaching a tow bar *(see figure 2-33)* to the rear wheel axle. The tow bar hooks over the towing lugs which protrude from both ends of the axle, as shown in figure 2-34. When towing the airplane, there should be one man in the pilot's compartment who is qualified to operate the brakes and tail wheel lock, and one man should be at each wing tip and at the tail to assist in the towing operations. When towing from either the front or the rear, make certain that the tail wheel is in the "unlocked" position. Do not attempt to move the airplane by pushing or pulling on the control surfaces, stabilizers, tabs, or flaps, but only by applying force to the wheel axles or to other approved locations.

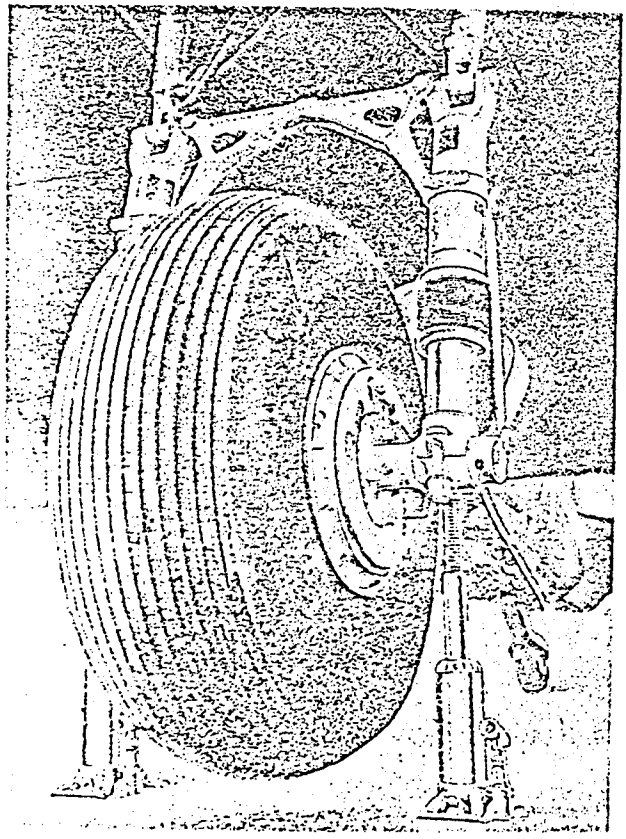

33,461

Figure 2-26. Jacks Installed at Main Wheel Axle

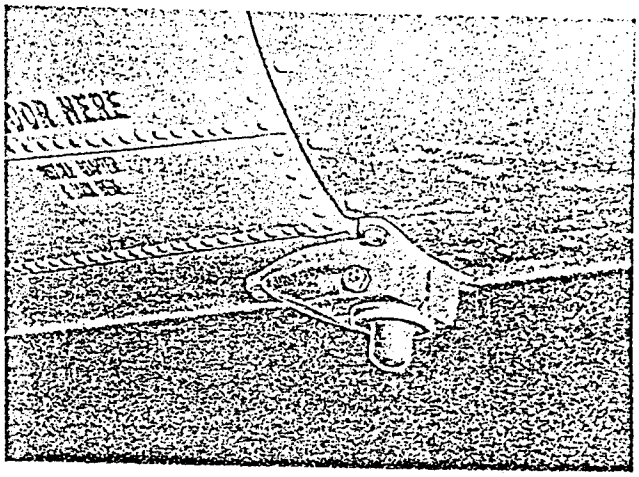

33,462

Figure 2-27. Tail Jack Cone Installed

CAUTION

To prevent retraction of the landing gear, install the ground safety pins at all times when the airplane is parked and especially prior to any maintenance of the airplane.

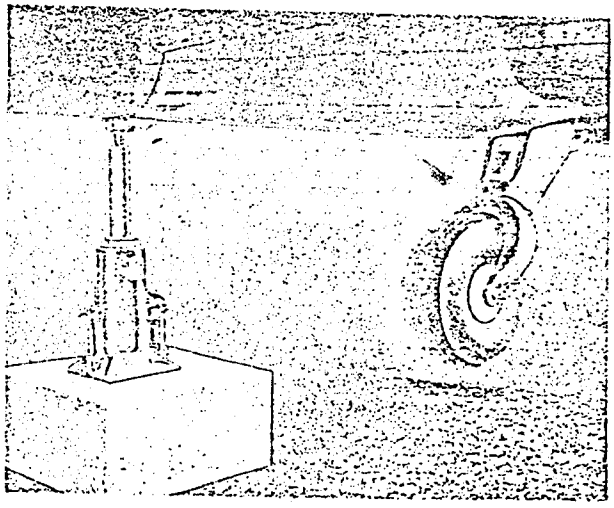

33,463

Figure 2-28. Jack Installed at Tail

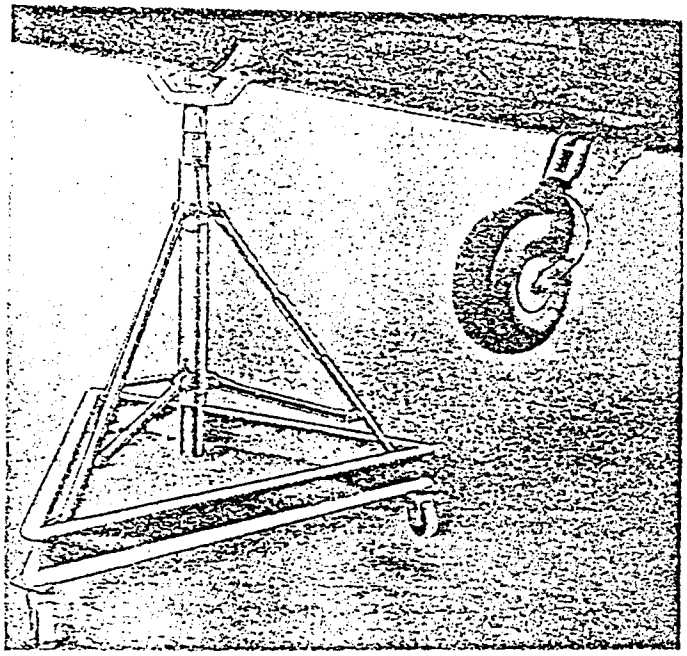

33,464

Figure 2-29. Collapsible Tail Stand Installed

2-26. PRECAUTIONS DURING TOWING.

a. Towing from the rear of the airplane should be employed whenever possible.

b. Do not attempt any towing while the parking brakes are engaged.

c. Avoid towing the airplane over rough ground, whenever possible.

d. In starting, when towing from the front, the acute angle between the centerline of the airplane and the line of towing force is not to exceed 60 degrees.

e. When towing from the tail, the acute angle between the tail wheel and the centerline of the airplane is not to exceed 60 degrees at any time; and in starting, this angle is not to exceed 45 degrees.

f. Do not push the airplane forward by means of the tail wheel tow bar.

g. Do not tow from the tail up any grade that is more than 11 per cent on hard ground. Do not tow from the tail on soft, boggy, or rough ground.

h. Tow the airplane from the front when it is loaded or when it is moved over soft ground.

i. Governed by local terrain conditions, tow at low speed, not to exceed 5 mph. Avoid any sudden stops.

WARNING

Do not operate the engines of the airplane when a tow tug or tractor is attached to it.

2-27. TAXIING FOR GROUND HANDLING.

2-28. GENERAL DESCRIPTION. Whenever taxiing of the airplane is necessary, refer to the applicable flight manual for instructions. Safe ground movement of the aircraft depends upon correct hand signals given to the personnel taxiing the aircraft. The correct position of marshaler, in addition to proper signal given, is very important. The marshaler will stand forward of the left wing tip, within full view of the pilot. For directing ground movement during night operations, the marshaler should be furnished with illuminated wands or flashlights. Refer to AFR 60-15 for appropriate hand signals.

2-29. PARKING.

2-30. GENERAL DESCRIPTION. Park the airplane in a previously designated area. Head the airplane into the prevailing wind and set the parking brakes as follows:

a. Depress the brake pedals evenly.

b. Pull out the parking brake control *(see figure 2-35)*.

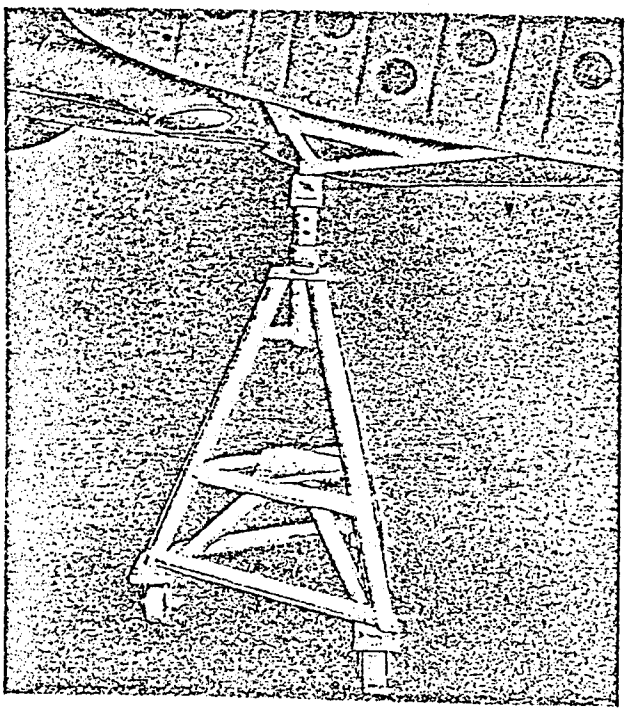

33,465

Figure 2-30. Wing Stand Installed

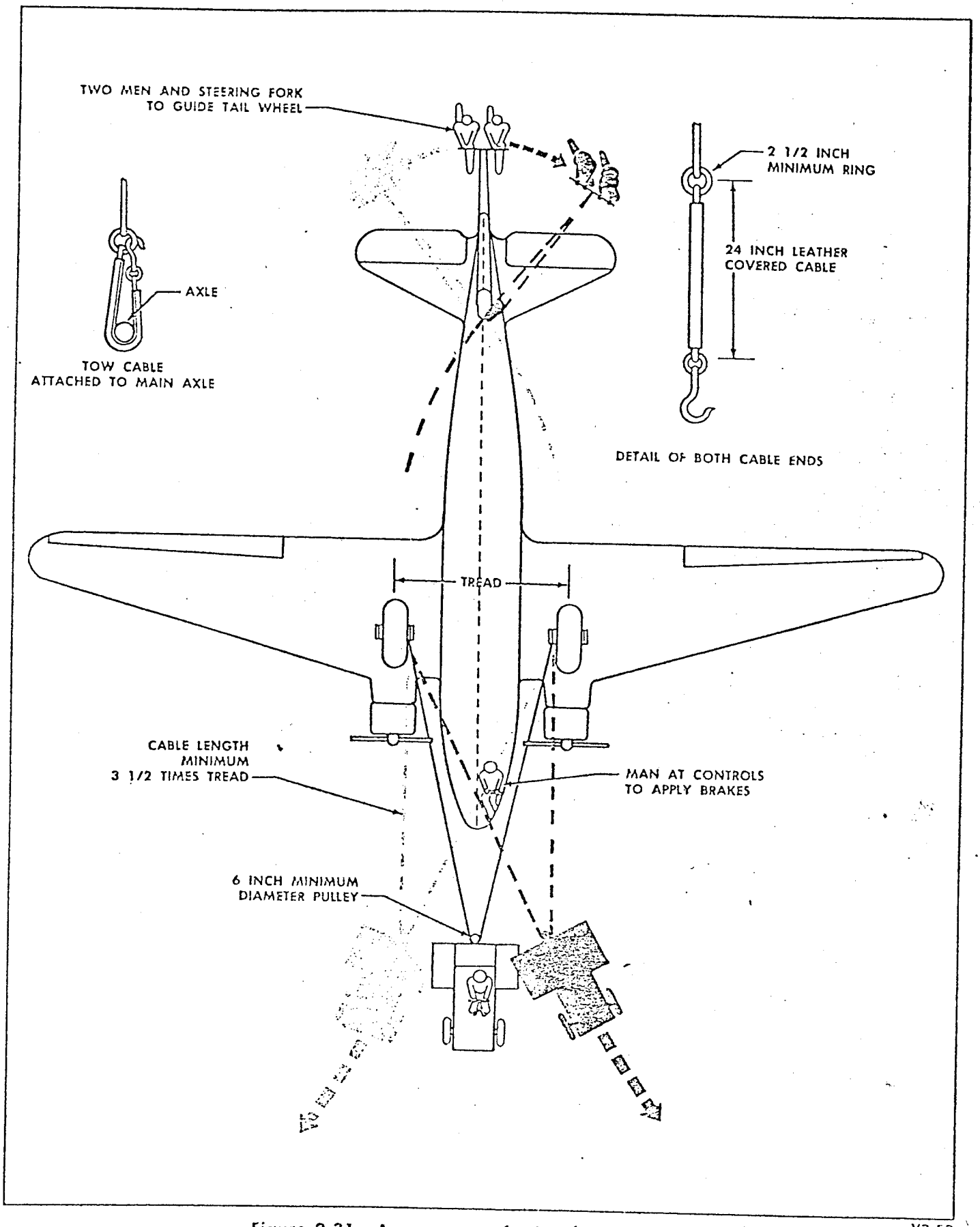

Figure 2-31. Arrangement for Towing from Front

V2-53

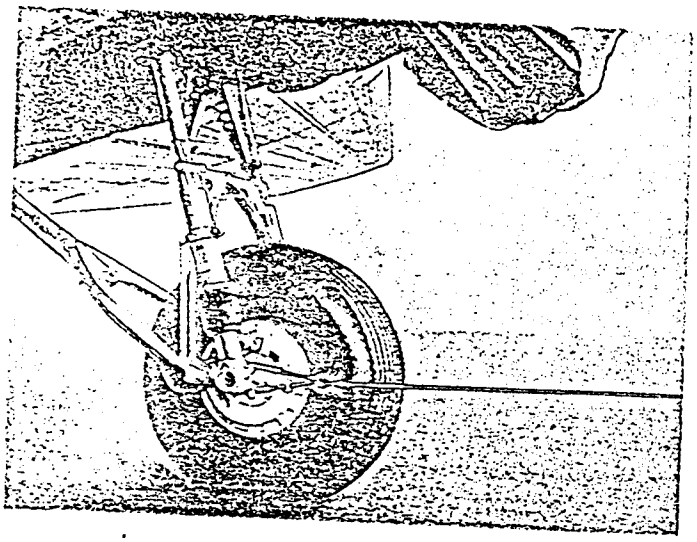

33,467

Figure 2-32. Attachments for Towing from Front

c. The hydraulic pressure gage must indicate at least 500 psi when the airplane is parked.

d. To release the brakes, depress the pilot's brake pedals.

CAUTION

When the brakes have received severe use in landing, permit them to cool before setting the parking brakes.

2-31. The tail wheel is locked in the trail position by pushing forward the lever-type control located on the lower section of the control pedestal, as shown in figure 2-36. To unlock the tail wheel, pull the control out to the limit of travel.

CAUTION

The tail wheel must be in the center position before the tail wheel lock lever will engage the tail wheel in the LOCK position. In all cases, lock the tail wheel when the airplane is parked, moored, during any jacking of the airplane, before a flight, and during landing. The tail wheel will be unlocked only while taxiing on the ground and during ground handling which involves turns. Turning without first unlocking the tail wheel will result in shearing the locking pin or damaging the wheel assembly.

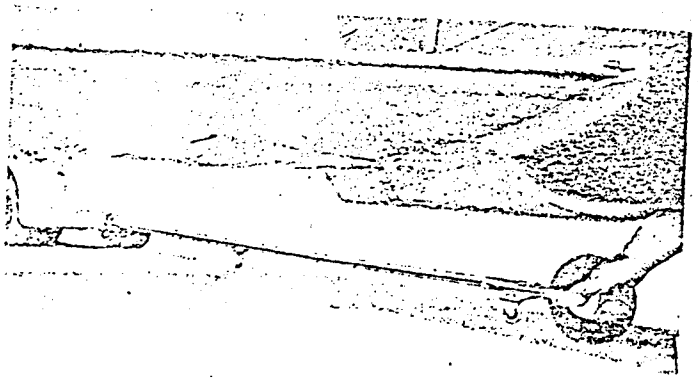

33,468

Figure 2-33. Tail Tow Bar in Use

2-32. When the airplane is parked outside a hangar, install the off-neutral external control locks on the rudder, the ailerons, and the elevators. These locks are to be installed whenever the airplane is left unattended, regardless of weather conditions. Gust locks must be properly maintained at all times. Serviceable bungee cord and streamers must be attached. Aileron gust locks will be correctly identified as either LH or RH in 1" contrasting color letters.

CAUTION

- Do not use the autopilot as a means of locking the control surfaces.
- Aileron Gust Locks must be installed only on designated ailerons. Installation of left hand gust lock on right hand aileron and/or right hand lock on left hand aileron will result in structural damage to the wing if flaps are subsequently actuated.

WARNING

Observe that all external control-surface locks have been removed prior to start of take-off procedure.

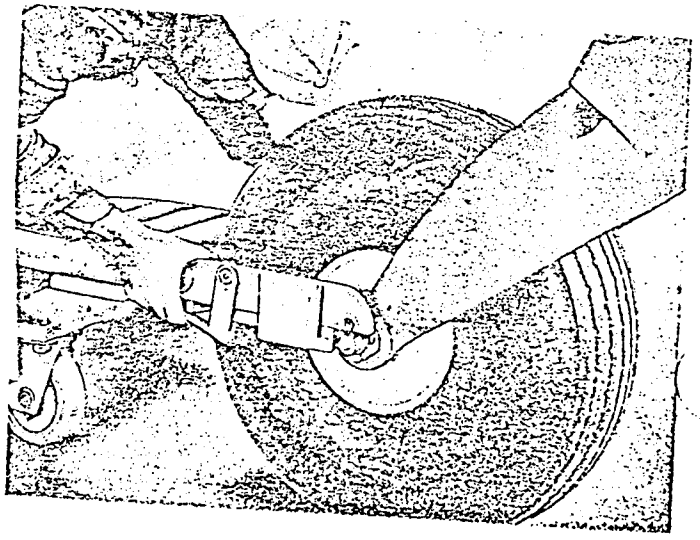

33,469

Figure 2-34. Attaching Tow Bar to Tail Wheel Axle

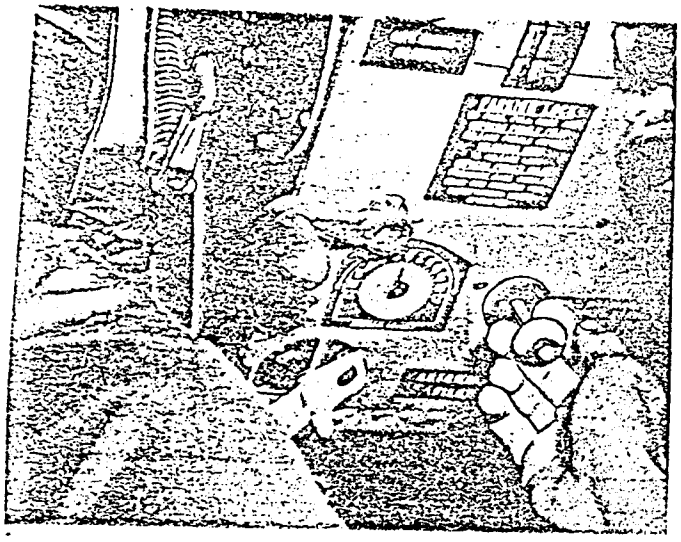

33,470

Figure 2-35. Parking Brake Control Knob

Place the wheel chocks forward and aft of both main wheels *(see figure 2-37)*.

2-33. MOORING.

2-34. GENERAL DESCRIPTION. To provide precautions or instructions for every type of weather condition would result in repetitive items and would restrict command responsibility to circumscribed limits. In certain geographical areas, additional precautions must be taken for typhoons, hurricanes, tornadoes, etc. Local base regulations and procedures will supplement the foregoing instructions. Execution of mooring procedures for high winds will vary, contingent on personnel and

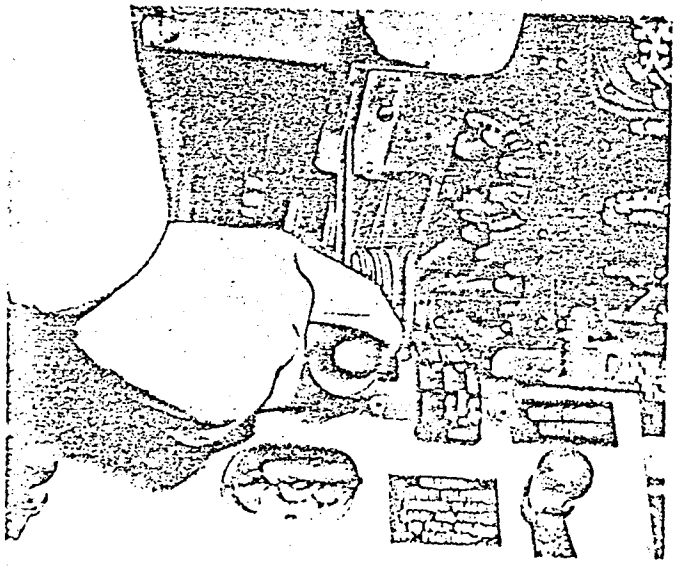

33,471

Figure 2-36. Tail Wheel Lock Lever

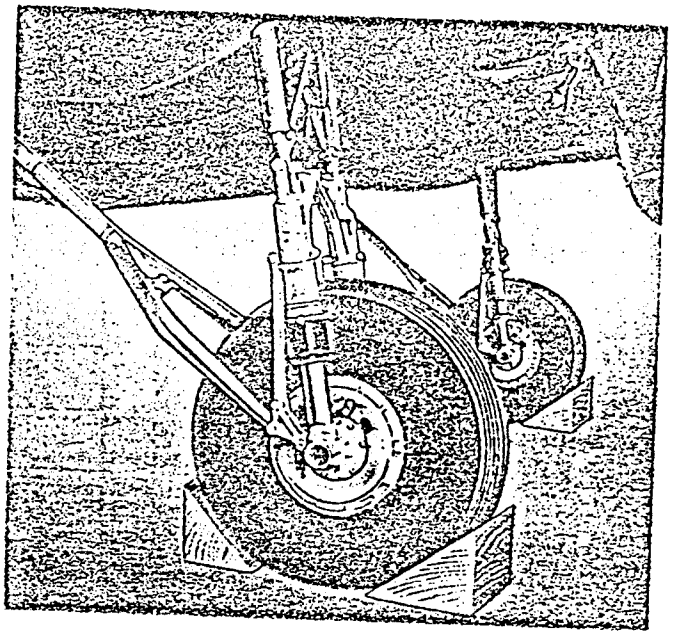

33,472

Figure 2-37. Chocks Installed at Main Wheels

equipment available and the timely receipt of adverse weather reports. Where airplanes are moored for periods in excess of 5 days, inspection provisions governing stored airplanes will apply.

CAUTION

Use only approved sizes of ropes and cables for securing aircraft to mooring anchors.

If weather conditions such as high winds or gusts are anticipated, secure the airplane to the ground. Figure 2-38 gives the airplane weight and relative wind velocities when the airplane is to be secured. To make use of these figures, it is advisable to know the approximate weight of the airplane in its various configurations. Locate the airplane slightly more than a wingspan distance from other airplanes. Follow the parking procedures outlined in paragraph 2-29, and then accomplish the following:

CAUTION

Structural damage can occur from high-velocity surface winds; therefore, evacuate the airplane to a safe weather area if a tornado, hurricane, or winds above 65 knots are expected. If the airplane is inadvertently subjected to these conditions, inspect the surface controls and their hinge points for damage and movement throughout their full range of travel. Also inspect the airplane exterior for damage from flying objects.

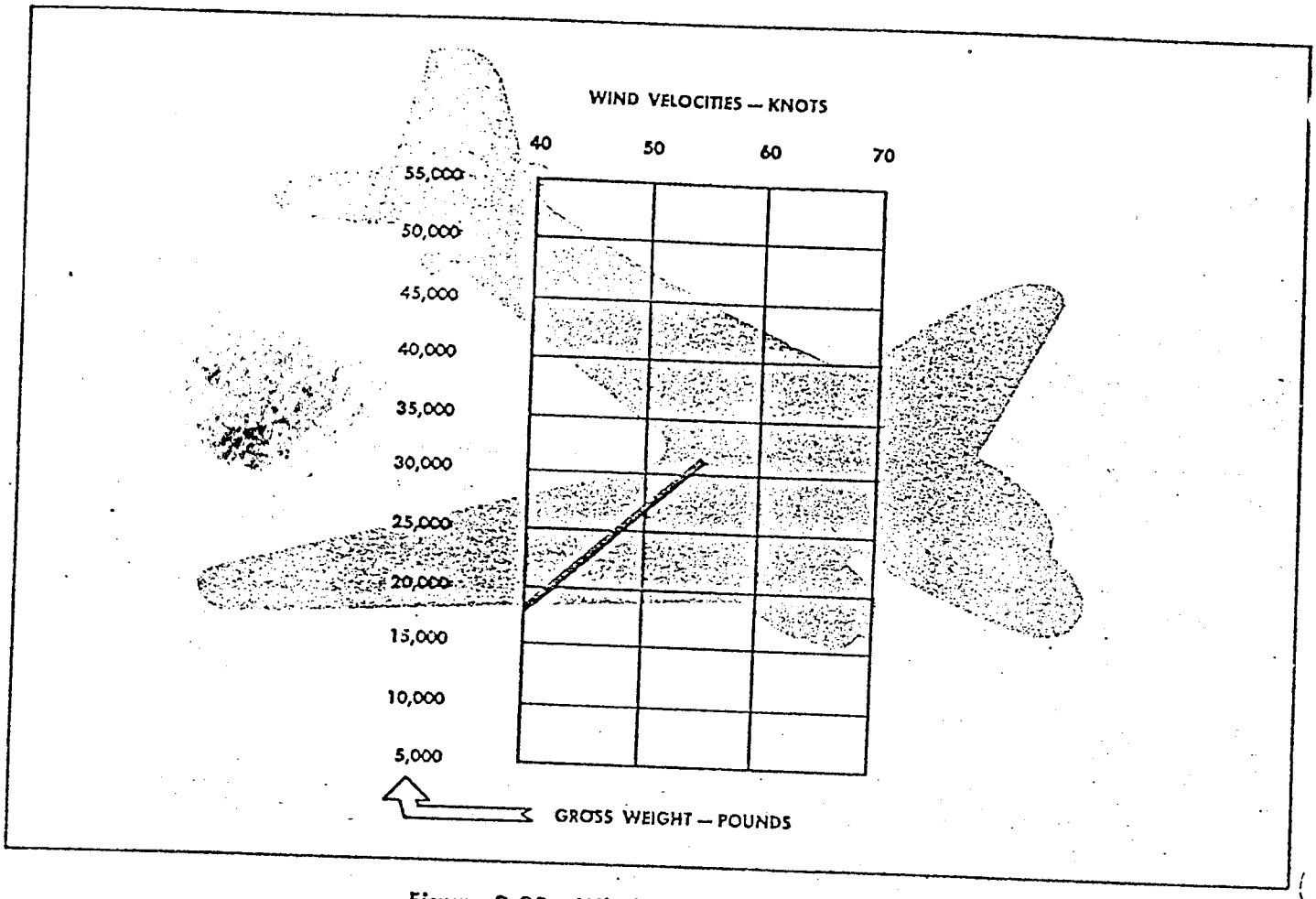

Figure 2-38. Wind Velocities in Knots

33,473

a. In the event the airplane does not have static conductor-type tires (the words "Electrical Conductor" in raised letters are located directly under the tire size if the tire is a conductor type) or if a static ground chain is not installed on the tail landing gear axle, make provisions for direct electrical static grounding of the airplane by providing an electrical conductive wire with solid contact on the airplane and attaching it to a fixed metal stake in the ground.

b. Install spoilers on the wings to give added protection to the moored airplane. Fasten the spoilers with a flat twill tape to the upper surface of the wings to decrease the wings aerodynamic efficiency by loss of lifting effect. The spoilers extend approximately 75 per cent of the wing span, starting at the wing butt. They are located on the top surface of the wing, parallel to the leading edge and approximately 3 feet aft of the leading edge. Spoilers are of the fabric-bag, type, stock No. 5152-43D22262, Class 19E. Fill this bag-type spoiler with sand or a similar substitute, and make certain the earth filler contains no chemicals that will injure the wing surfaces. If bag-type spoilers are not available, use spoilers fabricated in accordance with AF drawing No. 46G17735 and/or 46G17740, or the wood-type spoilers consisting of two-by-fours with the 2-inch dimension parallel to, and lying flat on, the wing surface. Tie the two-by-four spoiler securely, preferably with flat twill tape, to prevent possible damage to wing surfaces.

c. Check all access and entrance doors and windows for security.

d. Install all dust excluders as required by weather conditions and theater of operation.

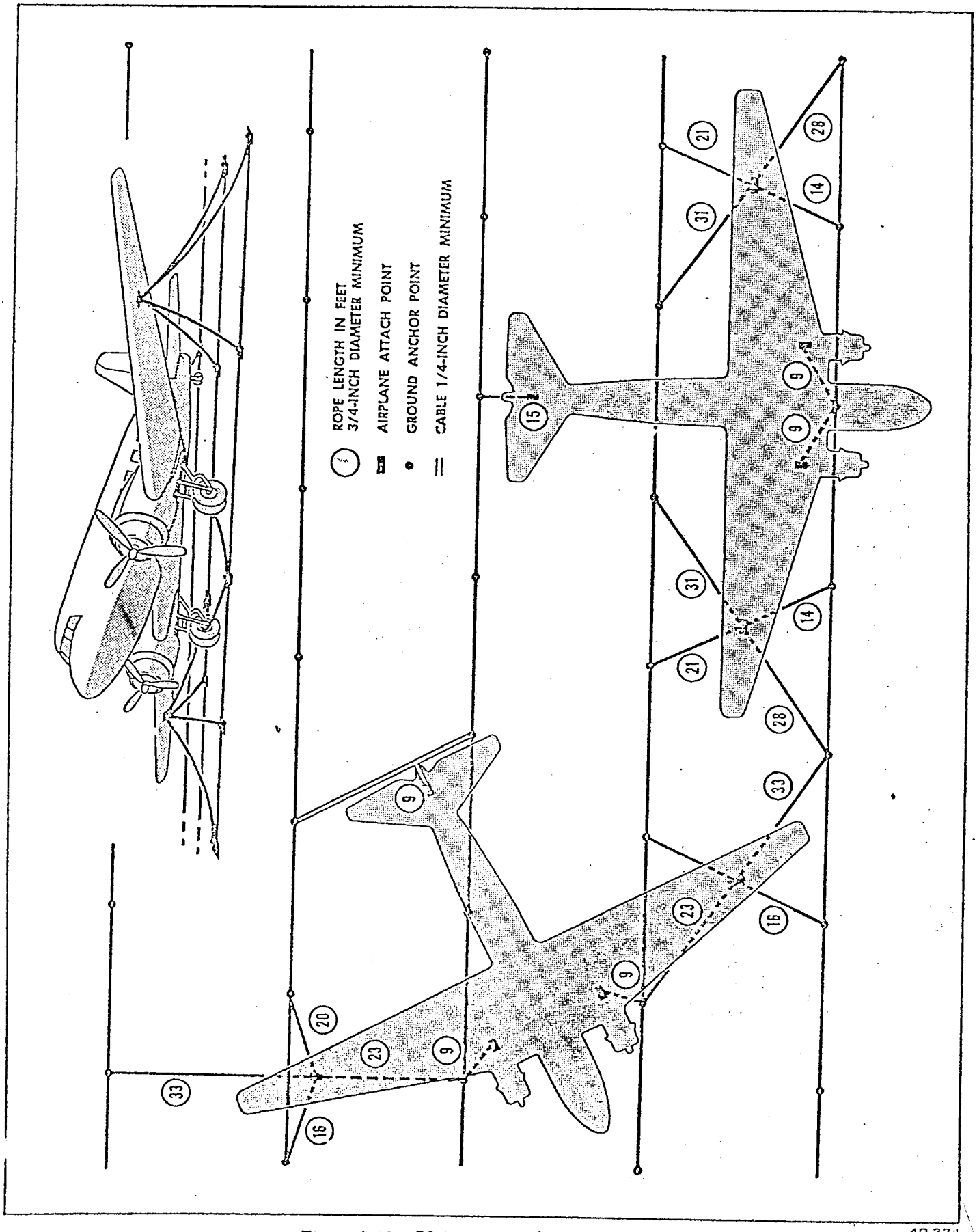

Figure 2-39. 30-Foot Mooring Grid Pattern

40.274

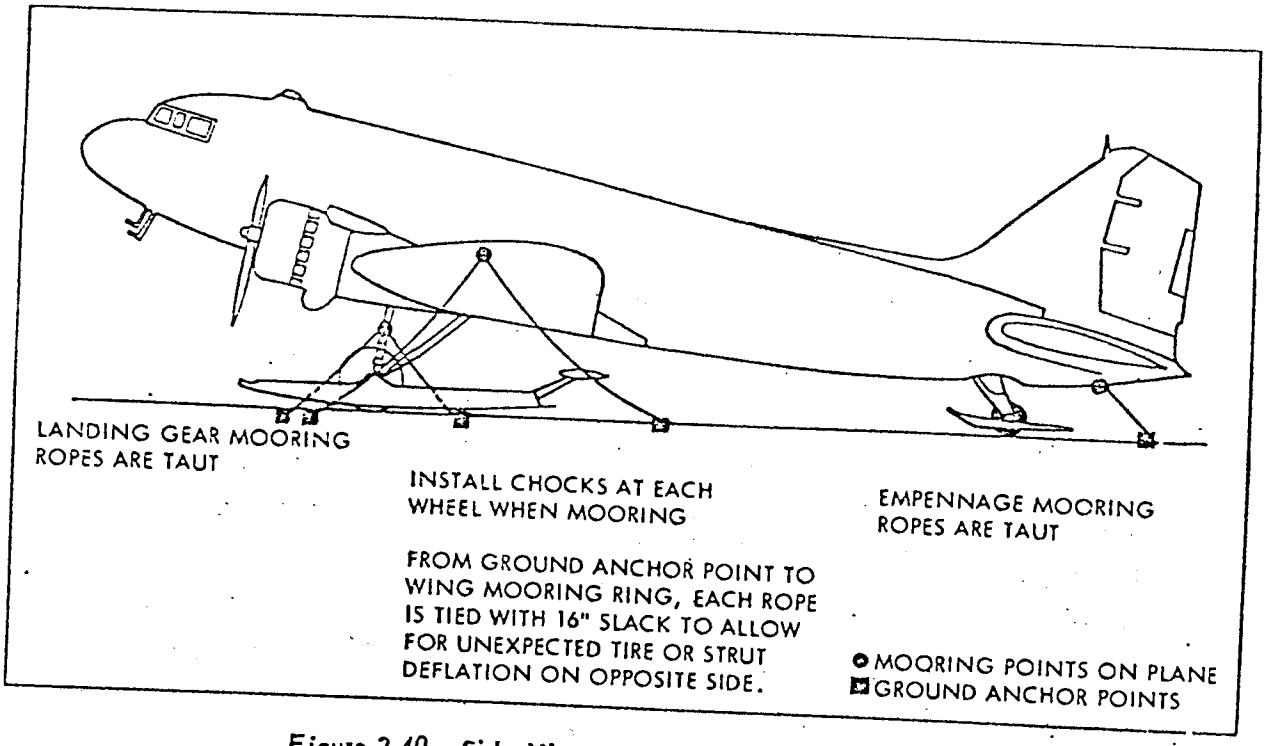

Figure 2-40. Side View of Mooring Arrangements

33,474

e. The airplane has five mooring points *(see figures 2-17 and 2-40)*. Tie the airplane down with hemp ropes, chains, or cables that will withstand a minimum pull of 3000 pounds, utilizing all five mooring points. Provide sufficient slack in the ropes between the ground mooring fittings and the airplane wing fitting to prevent undue stress or strain on the airplane structure *(see figure 2-41)* caused by moisture absorption of the ropes and tire, or strut deflection on the opposite side. At all other airplane tiedown fittings, the ropes must be tight *(see figures 2-42 and 2-43)*. Use antislip knots, such as bowline or square knots.(See figure 2-44.)

f. Permanent anchors for mooring may be installed on concrete aprons or ramps. These anchors will conform to the 30-foot grid pattern as shown in figure 2-39.

g. In the event tiedown rings are not provided on hard surface areas, move the airplane to an area where anchor kits AN8015-2 may be used. When kits AN8015-2 are not available, metal stakes or "dead man" -type anchors *(see figure 2-44)* may be used, providing a pull of 3000 pounds minimum may be sustained without failure on the installed anchor. If the airplane is parked on steel mats, tie it down to the mats. To use the mooring kit, P/N AN8015-2, the anchor rod, P/N 36A4468, is screwed into the arrow, P/N 36A4467, and the driving rod, P/N 36B4466, is slipped over the anchor and into the socket of the arrow. Turn the cam on the driving rod so that the prongs of the arrow will not be spread by driving. If the ground is hard, break the surface first by using the ground breaking pin, P/N 38B3323. Align the rod with the point of attachment on the airplane. Drive the arrow into the ground until the driving rod handle is within 3 inches of the ground. Rotate the driving rod 90 degrees and give it a sharp blow in order to spread the prongs of the arrow. Return the driving rod to the driving position and withdraw it from the ground. Align the squared socket of the eye assembly, P/N 36A4469, with the squared end of the anchor rod fitted into place, and screw the knurled nut down tight. Attach the mooring rope to the eye assembly and give an upward pull to spread and set the arrow prongs. Secure the mooring rope in accordance with previous instructions. To withdraw the anchor rods, detach the mooring ropes and unscrew the anchor rods by turning the ring of the eye assemblies counterclockwise, leaving the arrows in the ground.

h. If high winds are expected to be variable or shifting, install additional mooring tiedowns. Heading the airplane in the direction of the highest velocity winds is not as critical with the additional tiedowns. The location of mooring anchors in parking areas may make it necessary to vary as much as 45 degrees from the direction of the expected winds. Position the wood wheel chocks, P/N 42D6594-1, forward and aft of the main gear wheels and secure by nailing wooden cleats from chock to chock on each side of the wheel. Secure the chocks with rope when cleats are not available. Where ice and snow preclude the use of wood chocks, a collapsible wheel chock assembly for large airplanes will be used. Chock Type A-2, Stock No. 8200-159005,

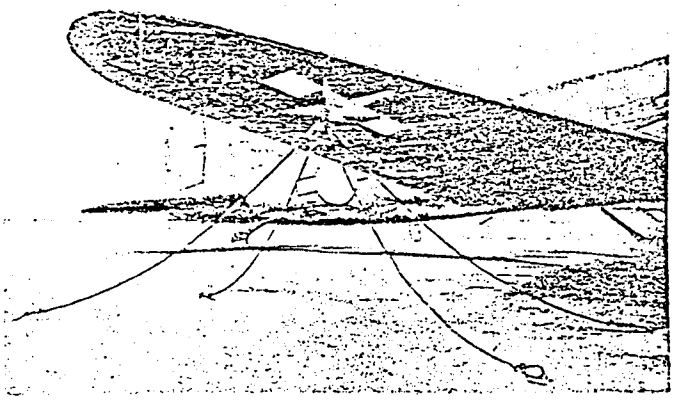

33,475

Figure 2-41. Wing Moored

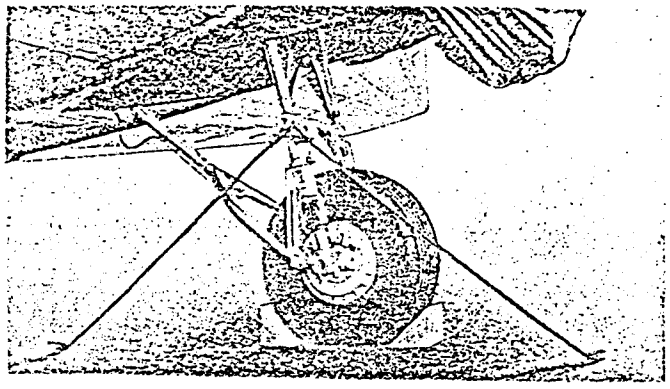

33,476

Figure 2-42. Main Landing Gear Moored to Permanent Installations

Class 19A. AF drawing 50J6555, is designed for conditions comparable to arctic operations. In all cases, the forward and aft chock of each main wheel must be tied together to prevent slippage.

WARNING

The holding force of a set of wheel chocks, even when properly placed in front of the main gear wheels, will not withstand the force exerted by the engine or engines at acceleration speeds without application of the brakes.

i. On ski equipped aircraft the anchor points for the main landing gear are located inside the well of the ski when it is installed on the airplane. Retrack main skis when chocking aircraft.

CAUTION

After removing the down ropes or cables from the main gear mooring be certain that no stakes or rings protrude above ground. This will prevent damage to the skis.

2-35. PROTECTIVE COVERS.

2-36. GENERAL DESCRIPTION. Various protective covers are provided with the airplane or from USAF stock. Covers provided with the airplane include engine covers, aileron dust excluder, nacelle dust excluders, nonram air filter dust excluders, main landing gear shock strut covers, cowl flap cylinder dust excluders, and plug assemblies, muff-type dust excluders for exhaust stacks. Propeller and wing covers are available from USAF Stock.

2-37. ENGINE COVERS.
(See figure 2-45.)

2-38. Two canvas engine covers are stowed on the bottom right side of the bulkhead in front of the lavatory compartment. The cover is equipped with propeller hub tie-down straps and a closing zipper. Install the cover with the closing zipper located on the underside of the nacelle. Two openings in the cover, one aft of the propeller hub and one at the starter access door are provided for installing ground heater ducts. Openings at the bottom of the cover provide clearance for vent pipes.

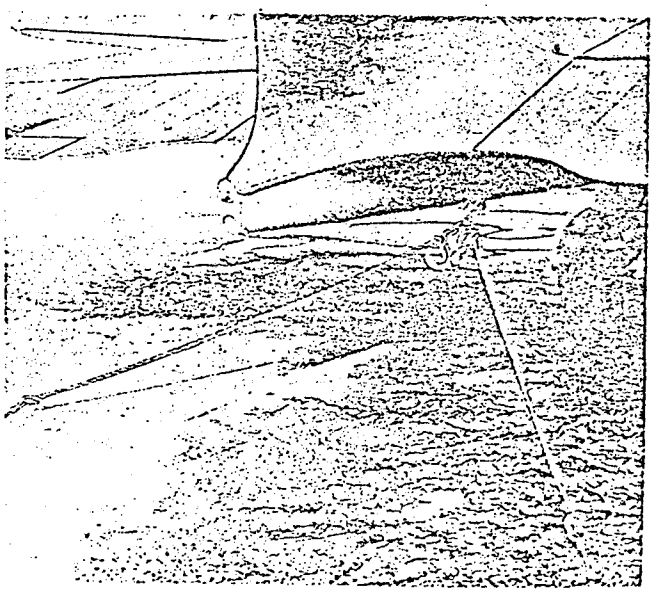

33,477

Figure 2-43. Empennage Moored

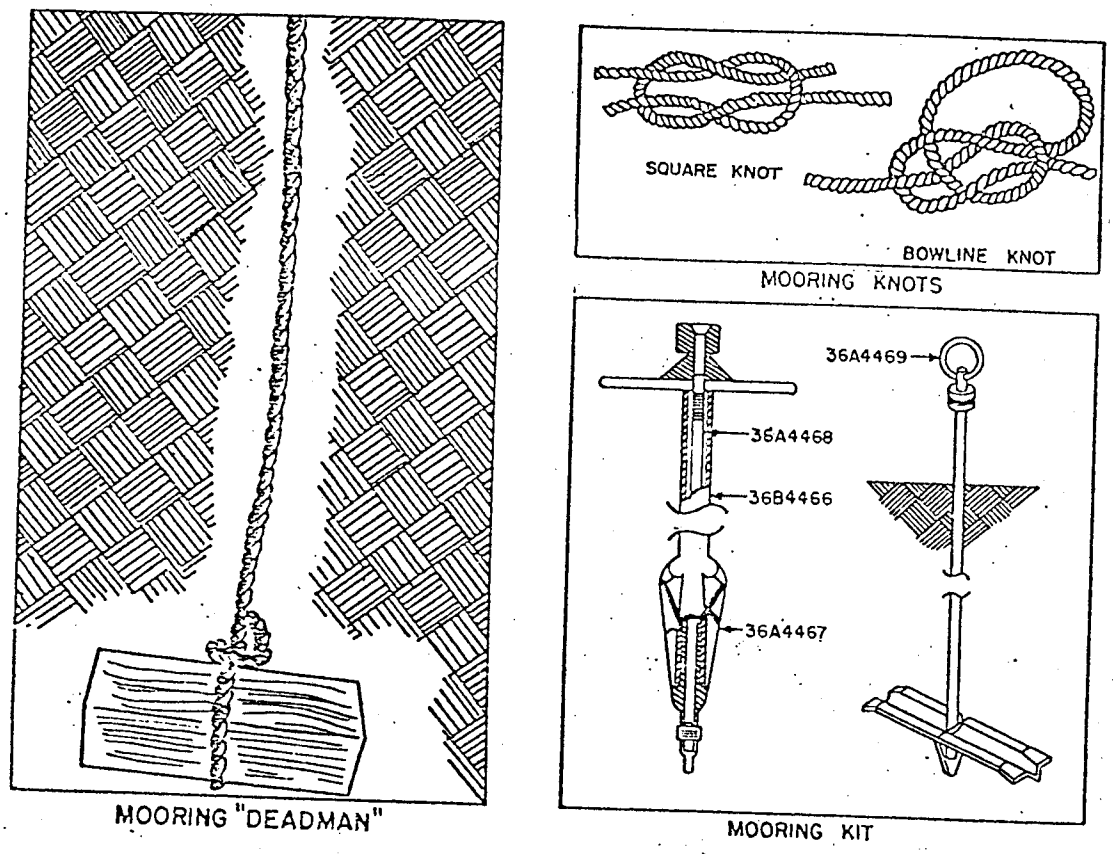

Figure 2-44. Tie Down Equipment

2-39. AILERON DUST EXCLUDER.

2-40. Small covers trimmed with felt are provided for the actuating arms of the ailerons to prevent dust from fouling the mechanism. These covers are stowed with the engine covers.

2-41. NACELLE DUST EXCLUDER.

2-42. A large canvas cover with openings to fit around the landing gear assembly encloses the lower nacelle opening. The cover protects the landing gear upper truss and shock struts.

2-43. NONRAM AIR FILTER DUST EXCLUDER. *(See figure 2-46.)*

2-44. On some airplanes, a square canvas cover is provided for the opening above and aft of the carburetor air filter.

2-45. MAIN LANDING GEAR SHOCK STRUT DUST EXCLUDER.

2-46. Rubberized covers are provided for the shock strut pistons to protect them from dust.

2-47. COWL FLAP CYLINDER DUST EXCLUDER.

2-48. A rubberized cover is provided for the cowl flap cylinder and piston on the lower inboard segment of the antidrag ring to prevent dust from entering the unit.

2-49. PLUG ASSEMBLY, MUFF-TYPE DUST EXCLUDER. *(See figures 2-47 and 2-48.)*

2-50. Stowed with the engine covers, are two small oval pads trimmed with asbestos sheeting. These are installed to exclude dust from the exhaust stack.

2-51. PROPELLER COVERS.

2-52. Install the propeller blade covers, whenever handling or storing the airplane to prevent damage.

2-53. WING COVERS.

2-54. When the airplane is parked in locations where frost is anticipated, install the canvas wing covers to protect the wings from frost or ice.

WARNING

Do not attempt take-off if the wings are covered with frost or ice. Remove the frost or ice (see paragraphs 2-96 through 2-99).

2-55. LEVELING.

2-56. GENERAL PROCEDURES. Two sets of leveling pins are provided as reference markers so that the airplane can be leveled on both longitudinal and lateral axes. Leveling is required before weighing the airplane to determine its basic weight and the location of its center of gravity. Leveling is accomplished by placing a sensitive-type spirit level against the reference pins and adjusting the airplane until it is level. Figure 2-49 shows the use of a spirit level and a set of reference pins used to level the airplane from nose to tail. The leveling pins, shown in figure 2-49, are located outside the fuselage below the sixth cabin window on the right side. Figure 2-50 shows the leveling of the airplane from wing tip to wing tip. The two leveling pins shown in figure 2-50 are located on the bottom of the center wing section forward edge, on the port side. If a spirit level with sufficient length to span the pins is not available, use a straightedge with the level. Where considerable leveling (weighing) is to be done, construct an inclined ramp for the tail wheel. Hoisting of the tail is not necessary in leveling the airplane longitudinally where such a ramp is used. If a tail ramp is not available, a tail hoist is required; do not attempt to jack the tail to a level position. Lateral leveling (leveling from wing tip to wing tip) is accomplished by manipulating air pressure in the main landing gear shock struts.

2-57. SERVICING.

2-58. GENERAL DESCRIPTION. Servicing of the airplane is accomplished as outlined in the following paragraphs.

2-59. WALKWAYS. The center wing section between the nacelles and the fuselage is reinforced for walkway purposes. When it is necessary to walk on the outer wing panels or on top of the fuselage, lay down padded boards.

CAUTION

Pads should be used on aircraft upper surfaces, where walkways are not installed, to prevent damage during maintenance and servicing.

2-60. SERVICING WITH FUEL. Because of the hazards involved in handling fuel, accomplish all fueling operations, including both filling and draining, outside the hangar.

WARNING

Perform all fueling, defueling and operations out of doors. Smoking is prohibited within 50 feet of the area. Airplanes should not be fueled or defueled within 100 feet of the hangers, measured from the fueling point or vent. Keep the servicing units at least 20 feet from other airplanes and structures. The fueling and maintenance of adjacent airplanes should be performed 50 feet beyond the fueling point and vents on the airplane being serviced. Before starting fueling or defueling operations, a static ground cable shall be connected from a fueler to an approved static ground, a cable shall be connected from the aircraft to static ground and another cable shall be connected from the aircraft to the fueler. Fueling hose shall be placed in position for the servicing operation and connect the static ground wire from the fuel delivery nozzle to the aircraft prior to removing filler cap on tanks. Nozzle shall then be inserted in opening. Fuel trucks must be equipped with a static ground chain. During all fuel servicing operations, make certain that adequate fire protection is immediately available.

2-61. BONDING FUEL DISCHARGE NOZZLE TO AIRPLANE. *(See figure 2-51.)* The fuel delivery hose must be metal lined or otherwise bonded between the nozzle and the fitting on the opposite end. Attach one end of a flexible bonding wire permanently to the discharge nozzle. When a fuel tank is to be filled, attach the free end of this bonding wire to the uninsulated metallic part of the airplane to assure an electric bond between the tank and the delivery hose. Do not attach the bonding wire adjacent to the filler neck of the tank. Connect this bond *before* removing the filler cap of the tank to be filled and *do not* disconnect until the cap has been replaced.

2-62. INSTALLATION OF FUEL NOZZLE GROUNDING RECEPTACLE. On all C-47A and early C-47B airplanes, install a grounding plug assembly AN2553 on each side of the fuselage, on the upper surface of the center wing located within 4 feet of the two filler caps near a frame. On later C-47B and C-117 airplanes, a B111745 receptacle is installed *(see figure 2-51.)*

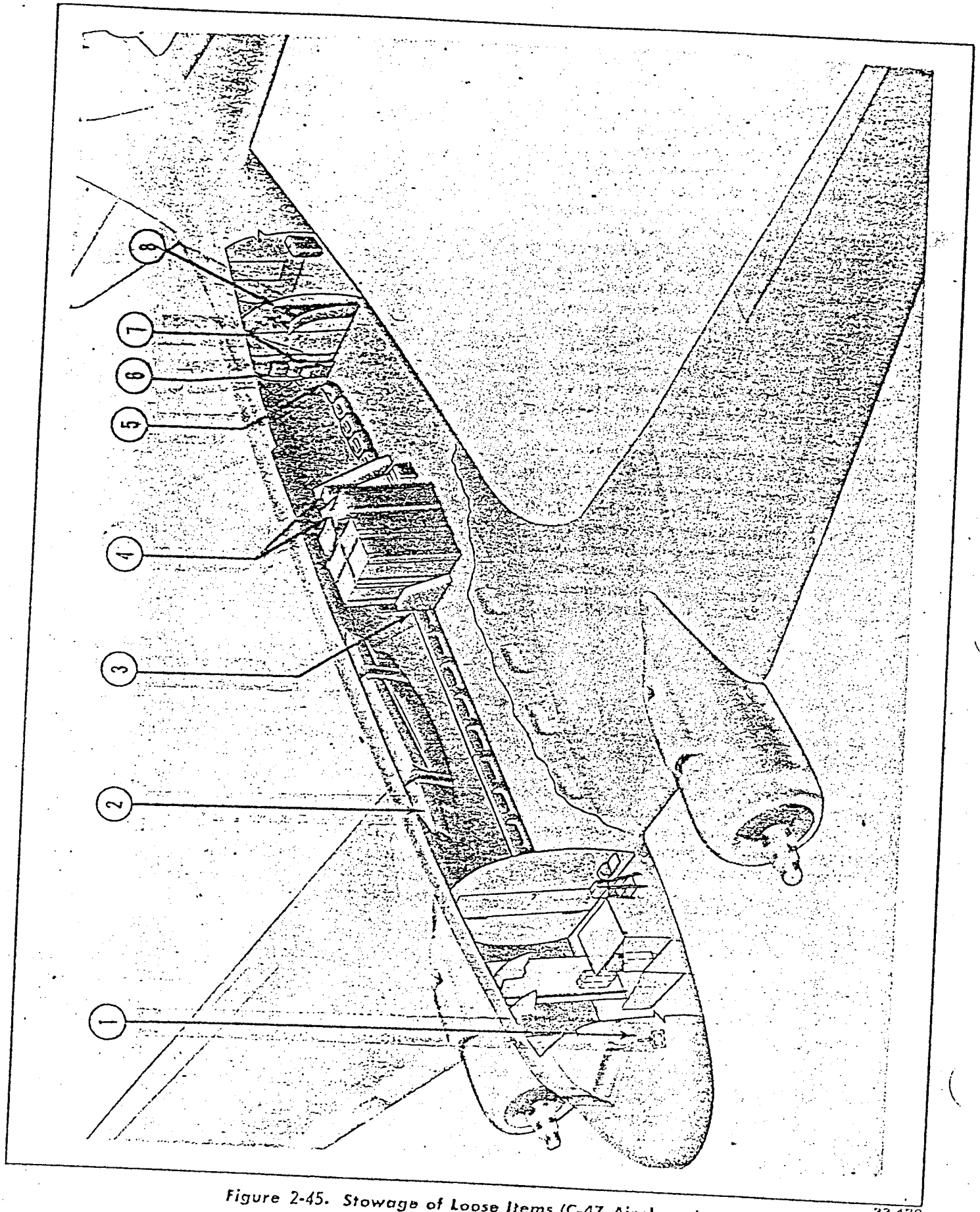

Figure 2-45. Stowage of Loose Items (C-47 Airplanes)

33,479

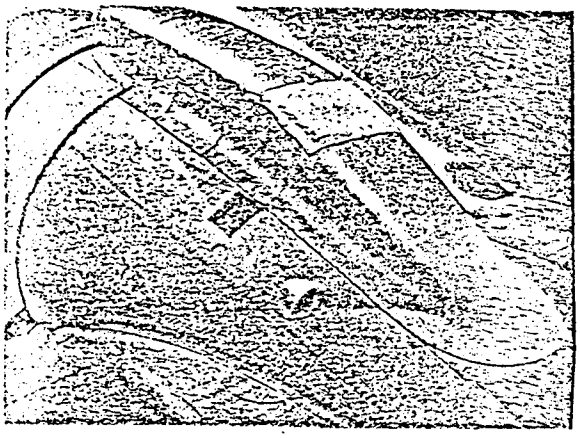

33,480

Figure 2-46. Nonram Air Filter Dust Excluder —Installed (C-47 Airplanes)

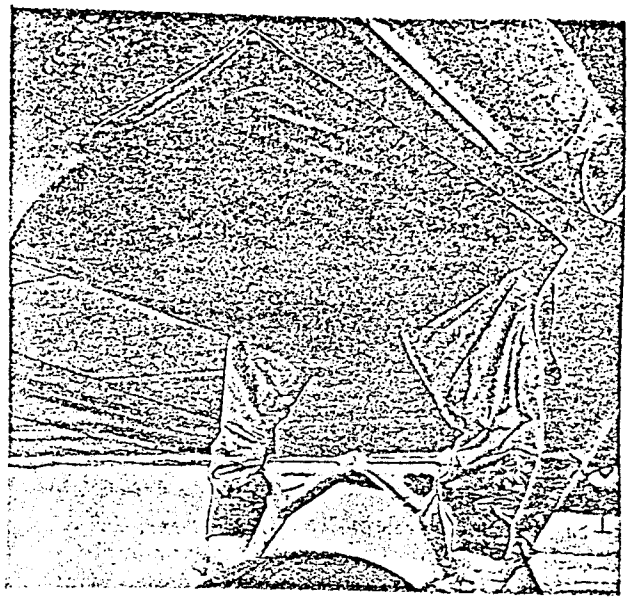

33,481

Figure 2-47. Nacelle Dust Excluder and Exhaust Plug Assembly—Installed

2-63. GROUNDING FUEL TRUCK AND AIRPLANE. The refueling truck must be equipped with a static grounding chain and two grounding cables. Connect one cable to the refueler and a grounding stake. The other cable is used to statically ground the airplane to the stake.

CAUTION

Remove plate voltage from all airborne radar transmitting equipment within a radius of 100 feet. Plate voltage shall be removed from all ground radar transmitting equipment within a radius of 300 feet. Do not operate radar equipment installed on RC-121-type airplanes within a radius of 300 feet. *Do not* conduct airplane refueling operations within 500 feet of radar set AN/FPS-6 or AN/MPS-14.

2-64. NUMBER OF FUEL TANKS. There are four regular fuel tanks, consisting of two main tanks and two auxiliary tanks. The airplane can be equipped with two, four, six, or eight long range tanks. For a description of the fuel tanks and the fuel system, refer to Section V.

2-65. LOCATION OF FUEL TANKS. The two main tanks are located in a forward position in the center wing section. The auxiliary tanks are also located in the center wing section, one aft of each main tank. Cylindrical long-range tanks are installed in the cargo compartment. If only two long-range tanks are carried, they are located lengthwise in the forward section of the cargo compartment. If four long-range tanks are

Key to Figure 2-45

Item	*Nomenclature*	*Item*	*Nomenclature*
1.	Pilot's Check List Holder	5	Plug Assembly
2.	Loading Ramp	6	Canvas Container
3.	Loading Ramp	7.	Engine Covers
4.	Loading Ramp	8	Cabin Entrance Step

carried, two are located lengthwise aft of the forward pair. Six or eight tanks are placed lengthwise on the floor in pairs. For installation of long-range fuel tanks, see Section VI.

2-66. CAPACITY OF FUEL TANKS. The main tanks have a capacity of 202 gallons each, and the auxiliary tanks have a capacity of 200 gallons each. The long-range tanks have a capacity of 100 gallons each.

2-67. KIND OF FUEL USED. To obtain full-rated horsepower of the engine, use cold soaked 100/130 grade fuel, specification MIL-F-5572A. (Grade 115/145 specification MIL-F-5572A fuel is acceptable as an alternate.) Do not add alcohol to the airplane fuel except through the fuel filter anti-icing system, if installed.

CAUTION

Should any of the tanks in the aircraft fuel system be accidentally fueled with JP-4 fuel, the following procedures will be followed.

a. If no attempt has been made to operate the engines subsequent to fueling with JP-4 fuel, drain the fuel tanks as completely as possible, refuel with the proper grade of aviation gasoline, and run engines for approximately five minutes.

b. If an attempt has been made to operate engines subsequent to fueling with JP-4, accomplish the following:

(1) Drain all fuel tanks as completely as possible.

(2) Refuel with proper grade aviation gasoline.

(3) Disconnect fuel lines at engine carburetors and operate boost/wobble pumps until two gallons of fuel have been expelled at each engine.

(4) Remove carburetor drain plugs and drain fuel from carburetors. Reinstall carburetor drain plugs.

(5) Reconnect fuel lines to engine carburetors and run engines for approximately five minutes.

(6) Run up engines and perform normal post flight check.

2-68. FILLING FUEL TANKS. Fuel tanks are filled as outlined in the following paragraphs.

2-69. FILLING MAIN AND AUXILIARY FUEL TANKS.

2-70. If necessary, remove the frost, snow, water, or ice from the fuel filler cap. Fill the auxiliary tanks first to prevent siphoning action from the main tanks to the auxiliary tanks. If only 400 gallons of fuel are to be carried, place the fuel in the auxiliary tanks. The filler necks for the four tanks (two main and two auxiliary) are located in the upper surface of the center wing.

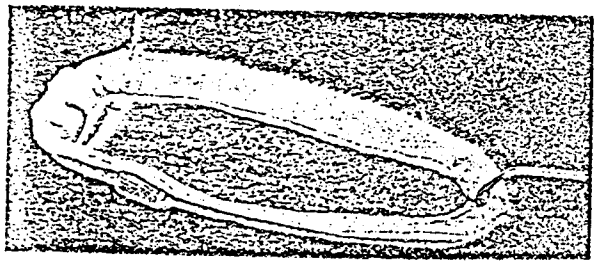

Figure 2-48. Exhaust Plug Assembly 33,482

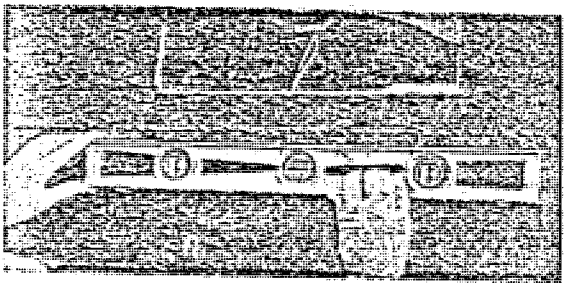

Figure 2-49. Leveling Airplane from Nose to Tail 33,483

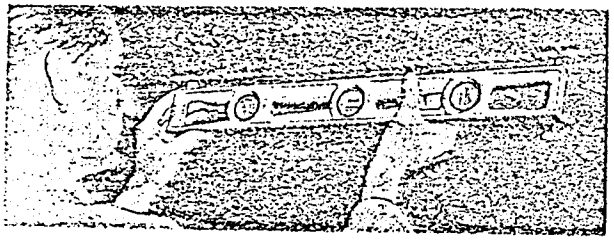

Figure 2-50. Leveling Airplane from Wing Tip to Wing Tip 33,484

CAUTION

To prevent damage to the filler necks, the delivery hose should be held by servicing personnel. *Do not* allow the fuel nozzle to remain in the opening without any support.

To prevent water from entering fuel tanks inspect filler cap gaskets for condition (softness and resiliency.).

2-71. FILLING LONG RANGE FUEL TANKS.

2-72. Fill the long range tanks at the filler openings on the forward tanks. If two or four tanks are installed on the fuselage floor, fill them to capacity at either of the two forward tanks. If six or eight tanks are installed, open the cross-feed valve and fill the system from either of the forward tanks.

2-73. DRAINING FUEL TANK SUMPS.

2-74. Small quantities of water drain into the fuel tanks from condensation or sweating. Being heavier than fuel, the water seeks a lower level in the tanks. Drain the water by opening the drain cocks at the bottom of the sumps located on the underside of the center wing under the fuselage (*see figures 2-52 and 6-6*). A minimum time of preferably one hour but at least 30 minutes shall elapse between filling of tanks and draining the sumps. A minimum time of one hour shall elapse after each removal of aircraft from a heated shelter. After the drain cocks have been closed, secure them with safetywire. Much of the condensation or sweating within fuel tanks occurs soon after landing. Service with fuel as soon as practicable.

2-75. REMOVAL OF FUEL FROM MAIN AND AUXILIARY TANKS.

2-76. Remove fuel from the main or auxiliary tanks by either of the following two methods: by draining from the four drain cocks located under the surface of the center wing beneath the fuselage, as shown in figure 2-52; or by pumping through the filler neck of each tank. Pumping is usually more satisfactory, as it is faster. If fuel is to be removed from all four tanks (two main and two auxiliary), remove the fuel from the main tanks first.

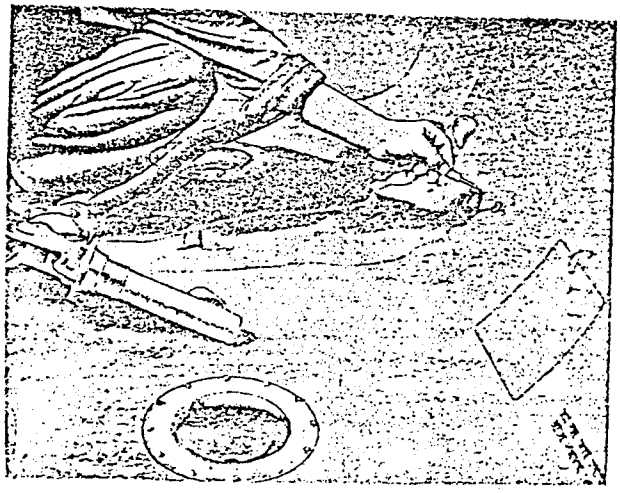

Figure 2-51. Bonding Fuel Discharge Nozzle to Airplane 33,485

2-77. DRAINING WATER FROM LONG RANGE FUEL TANKS.

2-78. Drain water from the long range fuel tanks *before* each flight by opening the needle valve (or valves) at the aft end of the tank system. Two-and-four tank installations have only one drain valve. Six-and-eight-tank installations have two. The drain valves occupy the lowest position in the long-range fuel tank system. The drain valves are always safetied. After draining, again safety them.

2-79. DRAINING FUEL FROM LONG RANGE TANKS.

2-80. Fuel is drained from the long-range fuel tanks by opening the same needle valve (or valves) that are used in draining water from the tanks. Two or four tank installations are drained by one valve. A rubber drain hose routed from the drain valve through the door of the compartment provides a satisfactory conduit. Six or eight tank installations are drained by opening the drain valve located at the lower end of each aft tank.

2-81. FILLING FUEL TANK CORROSION-PREVENTIVE CARTRIDGES.

2-82. Located at the bottom of each main and auxiliary tank sump is a plug-screw assembly containing the sump drain cocks *(see figure 2-52)*. This unit also contains a cartridge filled with potassium chromate crystals which prevent corrosion in the fuel tanks. Remove, clean, and refill the cartridges with potassium chromate crystals every 6 months. The plug-screw assemblies are removed with a special gas tank sump drain wrench as shown in section VI. Service the potassium chromate cartridges as outlined in the following steps.

WARNING

Handle potassium chromate with care, both in cleaning and refilling the cartridges. Potassium chromate is poisonous and inflammable.

a. Drain or pump all fuel from the fuel tanks.

b. Remove the plug-screw assemblies from the tank sumps.

c. Refill the cartridges with a fresh supply of No. 4 to No. 12 mesh size potassium chromate purified crystals.

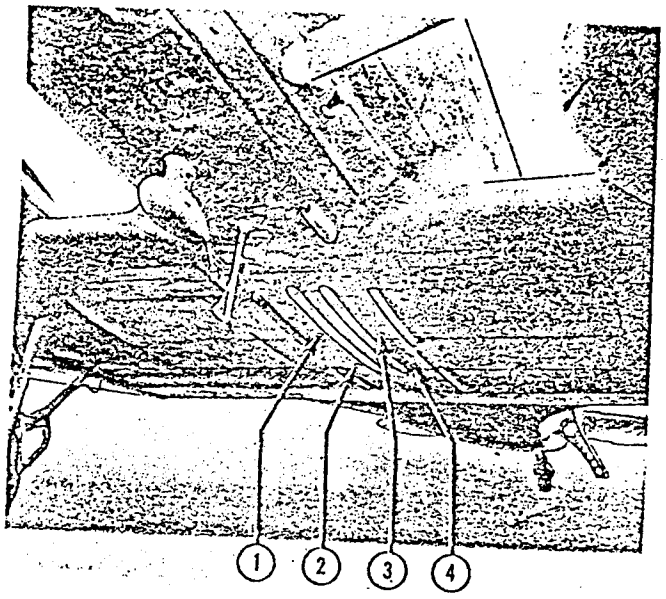

33,486

Figure 2-52. Fuel Tank Drain Points

Key to Figure 2-52

Item	*Nomenclature*
1.	Right Main Fuel Tank
2.	Right Auxiliary Fuel Tank
3.	Left Main Fuel Tank
4.	Left Auxiliary Fuel Tank

d. Install the plug-screw assemblies in the fuel tank sumps.

e. Refill the fuel tanks.

2-83. FUEL FILTERS.

2-84. Refueling units are equipped with filters to remove all solid particles having minor dimensions of 5 microns or larger, and are capable of removing 99.5 per cent of all free water.

2-85. SERVICING OIL TANKS. Servicing of the oil tanks is accomplished as outlined in the following paragraphs.

CAUTION

As a fire prevention measure, fill the tanks or drain the oil from the airplane outside the hangar at a safe distance from all buildings and other airplanes. Where weather conditions make servicing outside inadvisable, obtain specific authority from the station engineering officer to service the airplane in the hangar.

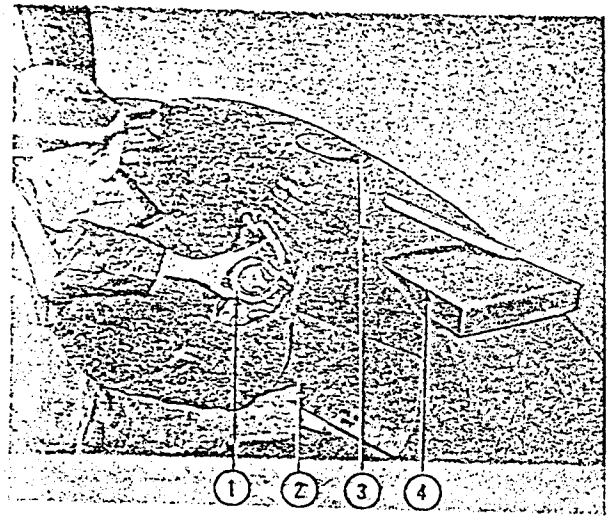

33,488

Figure 2-53. Preparation for Filling Oil Tank (C-47 Airplanes)

Key to Figure 2-53

Item	*Nomenclature*
1.	Oil Tank Filler Cap
2.	Oil Tank Access Cover Plate
3.	Measuring Rod
4.	Carburetor Air Filter

86. FILLING OIL TANKS.

87. The airplane has two oil tanks, one for each ngine. Each tank is filled through the filler neck, hich is accessible through openings in the top of the acelles *(see figures 2-53 and 2-54)*. The capacity of ch tank is 29 gallons. Do not place more than 25 llons of oil in each tank at any one time. The excess ace in the tanks allows for oil expansion with oil erflow. Each tank is equipped with an oil dipstick r determining the oil level.

Note

The airplane is equipped with hopper-type oil tanks. The lubricating oil will be changed whenever failure of an engine part makes it necessary to change the oil prior to engine change, or periodic inspection.

e grade of oil to use with the recommended operat- temperature ranges is given in table 2-1.

TABLE 2-1

GRADE OF OIL AND OPERATING TEMPERATURE RANGES

Oil Grade	*Air Temperature On the Ground*	*Safe Maximum Oil-In Temperature*	*Safe Minimum Oil-In Temperature*
1100	−7° to ±27°C (20° to 80°F)	85°C (185°F)	10°C (50°F)

2-88. DRAINING OIL SUMP AND PLUG DRAIN VALVES.

2-89. If the engine has not been run in the past 24 hours, prior to starting open the oil tank sump and plug drain valves and check for water, ice or congealed

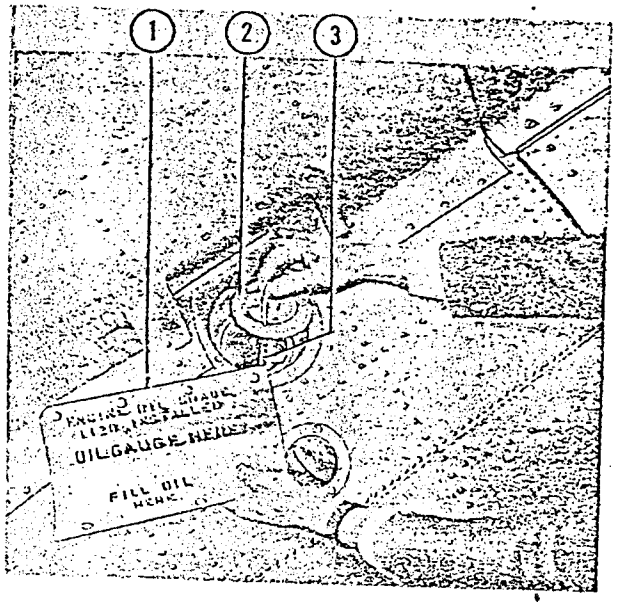

33,489

Figure 2-54. Preparation for Filling Oil Tank (C-117 Airplanes)

Key to Figure 2-54

Item	*Nomenclature*
1.	Oil Tank Access Cover Plate
2.	Oil Tank Filler Cap
3.	Measuring Rod

oil. The sump drains *(see figure 2-55)* are located at the bottom of the oil coolers. The plug drain valves are located on the forward side of the firewall near the bottom outboard side. If ice or congealed oil is present, use a heat gun or other type of heater unit without an open flame for thawing. Drain the oil tank sump and the drains of condensation immediately after each flight. Be sure the drains are closed and safetied after each draining or inspection.

2-90. SERVICING BATTERIES. Fill the storage batteries with distilled water if available, otherwise use drinking water. The level of the electrolyte will be no more than ⅜ inch above the protector plate. Add water with a self-leveling syringe from a Type D-1 battery service kit, Specification No. 40572, or equivalent.

2-91. SERVICING TIRES. Correct inflation of the landing gear wheel tires is an important procedure in obtaining maximum wear from tires. Overinflation results in excessive center tread wear, while underinflation results in damaging the casing side walls. For inflation chart, see Section IX, Figure 10-49.

2-92. If no tire gage is available, inflate the tires by the deflection method. To maintain the proper deflection of the tire, various inflation pressures are necessary, according to the loading of the airplane. Use a deflection gage when inflating the tires. If such a gage is not available, inflate the tires until the edge of the nonskid design or molded deflection marker barely touches the ground with the airplane resting on a smooth level surface. Check the tire inflation daily.

2-93. SERVICING HYDRAULIC SYSTEM. *(See figures 2-56 and 2-58.)* Use only mineral oil, Specification MIL-O-5606, to service the hydraulic system as outlined in the following steps.

a. Jack the airplane with wing jacks.

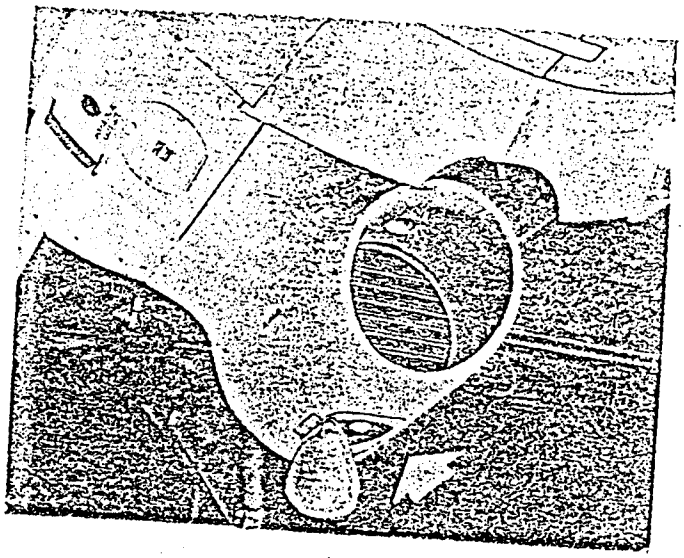

Figure 2-55. Oil Cooler Drain Plug 33,490

b. Extend the landing gear when filling the reservoir.

c. Charge the hydraulic pressure accumulator, located on the bulkhead aft of the co-pilot's seat, with air to 250 psi.

d. Remove the plug from the reservoir filler neck on the upper hydraulic control panel, located aft of the co-pilot's seat.

e. Using a clean container, fill the reservoir through the filler neck until the fluid level in the sight gage is opposite the top arrow decal located on the upper hydraulic control panel. Install the filler neck plug.

CAUTION

Do not allow the hydraulic fluid to drop below the level of the bottom arrow decal for the reservoir sight gage when bleeding the hydraulic system.

Key to Figure 2-56

Item	Nomenclature	Item	Nomenclature
1.	Fire Extinguisher	11.	Lavatory Water System
2.	Oxygen (portable cylinders)	12.	Tail Gear Shock Strut
3.	Hydraulic Fluid Reservoir	13.	Tail Gear Tire
4.	Oil Tanks	14.	Portable Fire Extinguisher
5.	Anti-Icing Fluid	15.	Anti-Icing Fluid
6.	Steam Heating System	16.	Anti-Icing Fluid
7.	Main Fuel Tanks	17.	Batteries
8.	Drinking Water	18.	Steam Heating System
9.	Auxiliary Fuel Tanks	19.	Main Landing Gear Shock Struts
10.	Oxygen System	20.	Main Landing Gear Tires

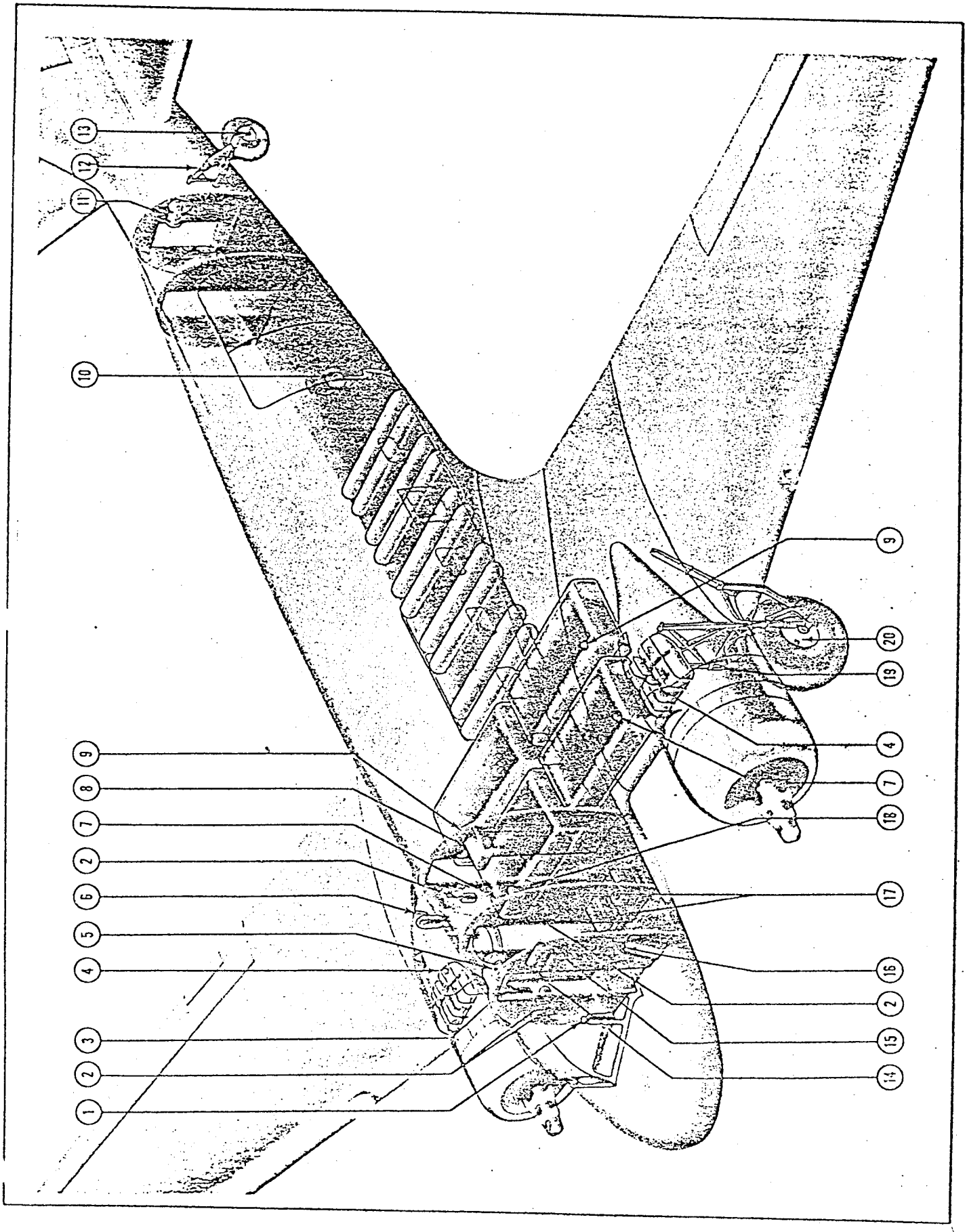

Figure 2-56. Replenishment Diagram (C-47 Airplanes)

33.492

f. Operate the hydraulic hand pump, or connect an external test stand at the firewall disconnect fittings, to obtain system operating pressure. Operate all units of the hydraulic system through their complete range of movement three or four times to bleed the air from the hydraulic units and piping.

g. Relieve the pressure in the hydraulic system by operating the wing flaps until the hydraulic system pressure gage indicates zero.

h. Remove the jacks from the airplane.

i. Check the fluid level in the reservoir sight gage and, if necessary, repeat steps d and e.

j. Start both engines. The hydraulic system pressure gage will indicate 600 to 875 psi when the hydraulic system pressure regulator is operating properly. Operate the wing flaps three or four times to bleed air from the hydraulic pipes. Check the operation of both engine-driven pumps by moving the engine pump selector valve from the NORMAL to the ALTERNATE position.

k. Bleed the brakes according to the instructions in Section III.

l. Stop the engines. Relieve the hydraulic system pressure by operating the wing flaps until the hydraulic system gage indicates zero. Check the fluid in the hydraulic reservoir again and repeat steps d and e if necessary.

m. Observe all precautions when handling hydraulic fluid to prevent contamination. Keep the storage containers sealed and all handling equipment clean for hydraulic fluid use only. Leakage or malfunction of the hydraulic units and excessive wear of parts are often caused by contaminated hydraulic fluid. Do not mix different types of hydraulic fluid, as the resulting mixture will cause the packings to seize, deteriorate, and clog the actuating cylinders. Do not expose hydraulic fluid to the air any more than is absoutely necessary. The fluid absorbs dust and grit when exposed to the air and this will cause serious damage to the hydraulic components. Condemn and discard all hydraulic fluid that has been previously used or exposed to dust contamination.

2-94. SERVICING SHOCK STRUTS. Service the shock struts with hydraulic fluid, Specification MIL-O-5606 (see Section X). Inflate the shock struts to 160 psi so that the extension is 4 (±¼) inches (see Section X).

2-95. SERVICING ANTI-ICING AND DE-ICING SYSTEMS. Fill the propeller de-icing system with ISOPROPYL ALCOHOL, Specification MIL-F-5566. Fill carburetor and windshield de-icing system with ETHYL ALCOHOL, Specification MIL-A-6091.

2-96. FLUID ANTI-ICING AND DE-ICING. The airplane surfaces are protected from ice and freezing rain by the use of anti-icing and de-icing-defrosting fluid, Specification MIL-A-8243A. This fluid is basically a 3:1 mixture of ethylene glycol and propylene glycol, with a corrosion inhibiting compound and a wetting agent added. It replaces the following fluids which may be used as alternates: De-icing-defrosting fluid, Specification MIL-D-8243; ethylene glycol, technical, Specification MIL-E-9500; ethylene glycol, Specification MIL-E-5559. If the fluid, Specification MIL-A-8243A, is not available, it may be compounded as follows. Add 2½ pounds of Aerosol OT (100 percent, commercially available) to 10 gallons of propylene glycol (commercially available), and heat to dissolve. Add 35 gallons of ethylene glycol (Specification MIL-E-5559) and a solution of 5 pounds of dibasic potassium phosphate (K_2HPO_4, commercially available) in five gallons of water. Stir well.

2-97. GENERAL DE-ICING AND DEFROSTING. A protective coating of unheated, undiluted fluid will prevent accumulations from forming on the surfaces of the airplane if applied before such freezing conditions begin and if applied as often as necessary during precipitation. Any frost or ice that does form can be removed by application of additional fluid. A protective coating of fluid applied before installation of covers will permit easy removal with a minimum of sticking.

CAUTION

Care must be exercised at all times to prevent any damage to the airplane surfaces. Sharp instruments such as picks, knives, or spatulas must not be used to remove any ice formation.

TABLE 2-2
DE-ICING EQUIPMENT

Name	*Type*	*Use*
Hydrometer-ethylene glycol	Kimble 286-1	Measure fluid-water mixtures.
Hydrometer-ethylene glycol	Kimble 286-2	Measure fluid-water mixtures.
Brush-airplane cleaning	MIL-B-5612	Remove snow, apply fluid.
Handle	H-B-651	Use with brush.
Spray outfit truck-mounted	Type MB-3 MIL-S-8262A	Apply de-icing fluid.
Spray outfit trailer-mounted	Type MB-4 MIL-F-26953	Apply de-icing fluid.

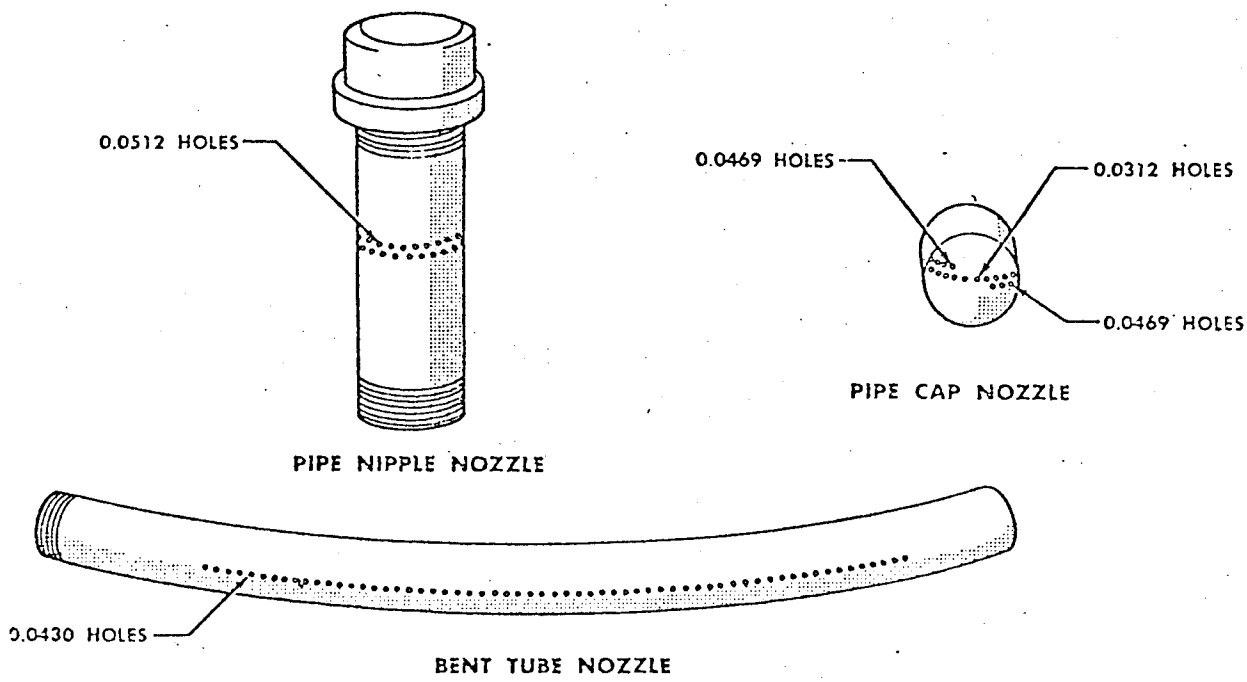

Figure 2-57. De-Icing Fluid Nozzles

V2-59

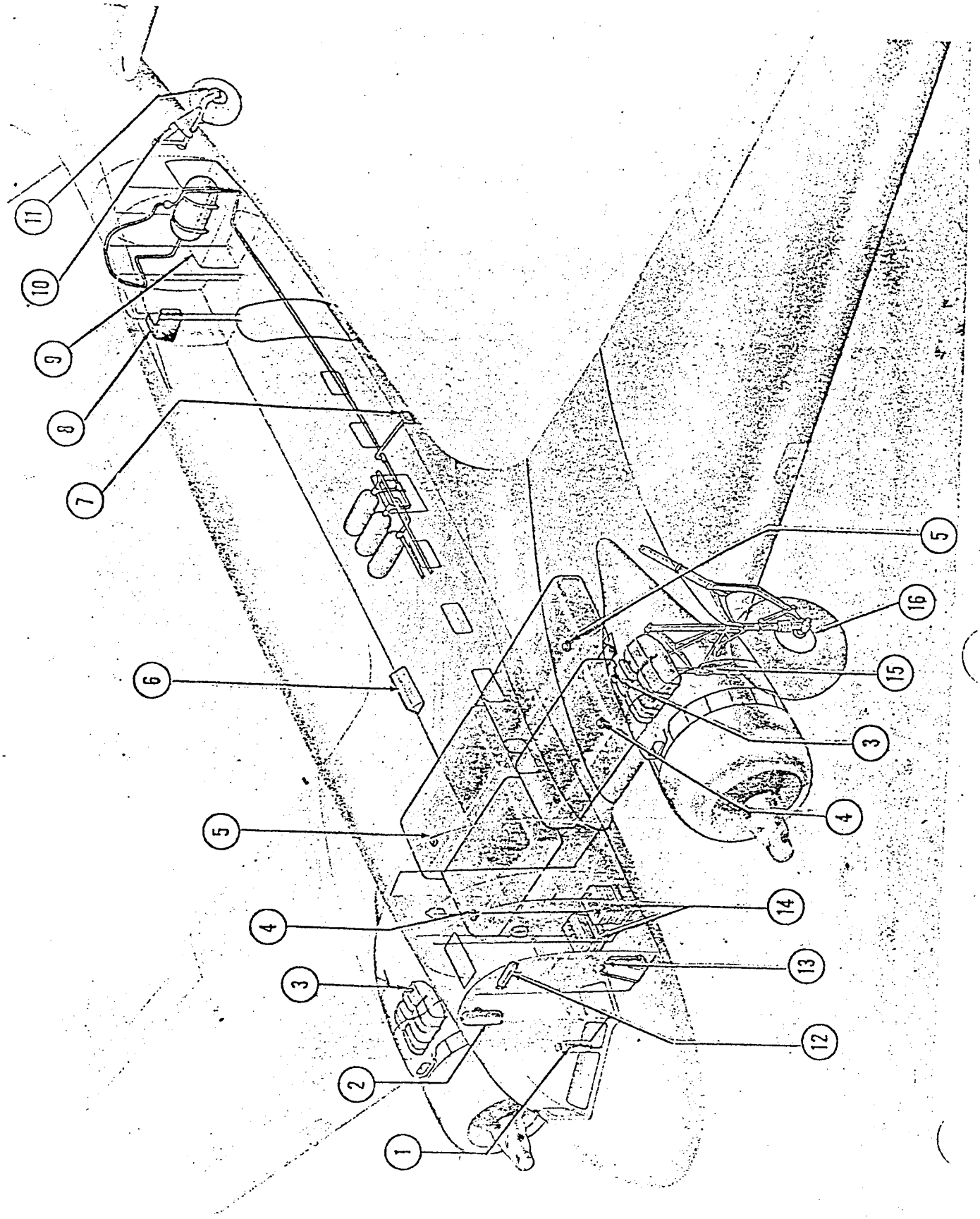

Figure 2-58. Replenishment Diagram (C-117 Airplanes)

33,493

Key to Figure 2-58

Item	Nomenclature	Item	Nomenclature
1.	Engine Fire Extinguisher	9.	Buffet (includes drinking water supply)
2.	Hydraulic Fluid Reservoir	10.	Tail Gear Shock Strut
3.	Oil Tanks	11.	Tail Gear Tire
4.	Main Fuel Tanks	12.	Portable Fire Extinguisher
5.	Auxiliary Fuel Tanks	13.	Anti-Icing Fluid (propeller)
6.	Anti-Icing Fluid	14.	Batteries
7.	Oxygen System	15.	Main Landing Gear Shock struts
8.	Lavatory Water Supply	16.	Main Landing Gear Tires

2-98. APPLICATION METHOD FOR FLUID DE-ICING AND DEFROSTING.

CAUTION

All applications of the de-icing fluid must be made from an approved-type stand or platform, taking every precaution to prevent slipping and falling should it be necessary to walk on the wing surface.

a. For removal of ice, the fluid should be diluted (see Table 2-3) and heated to 180 to 200°F (82 to 93°C). Apply the hot fluid to the icy surfaces in a solid stream so as to flood the surfaces and wash away the loosened pieces of ice. Enough of the heated fluid must be kept on the ice to keep the liquid layer from freezing. The fluid should be applied at pressures as high as possible but not over 100 pounds per square inch for fabric surfaces, or over 300 pounds for metal surfaces. Give particular attention to clearing the ice from the hinges of the control surfaces.

b. Fluid, Specification MIL-A-8243A, will protect against forming ice so long as it remains on the airplane surfaces. However, a freezing rain will tend to wash the surfaces free of fluid as well as to dilute the fluid to the point where ice is formed as if no fluid had been present. The amount of protection given by this fluid will be dependent upon the amount of freezing rain. Where covers are available, a coating of fluid applied cold and undiluted before the covers are installed will prevent the covers from freezing to the airplane surfaces and make the job of removing these covers much easier. Care must be taken that rain is

TABLE 2-3
DILUTION OF FLUID (ANTI-ICING AND DE-ICING-DEFROSTING)

Freezing point of mixtures of anti-icing and de-icing-defrosting fluid, Specification MIL-A-8243A, with water, and mixtures to use for various ambient temperatures.

Ambient Temperature		Percent by Volume		Freezing Point	
°F	°C	Fluid	Water	°F	°C
+30	−1	20	80	+10	−12
+20	−7	30	70	0	−18
+10	−12	40	60	−15	−26
0	−18	45	55	−25	−32
−10	−23	50	50	−35	−38
−20	−29	55	45	−45	−43
−30	−35	60	40	−55	−48

TABLE 2-4
DILUTION OF FLUID (DE-ICING MIXTURE)

Freezing point for mixtures of de-icing fluid, Specification MIL-E-5559, and mixtures to use for various ambient temperatures.

Ambient Temperature		Percent by Volume		Freezing Point	
°F	°C	Fluid	Water	°F	°C
+30	−1	20	80	+15	−9
+20	−7	30	70	+ 5	−15
+10	−12	40	60	−10	−23
0	−18	45	55	−20	−29
−10	−23	50	50	−30	−35
−20	−29	55	45	−45	−43
−30	−35	60	40	−55	−48

not allowed to blow under the covers, as dilution of the fluid will allow freezing to occur. Where covers are not available, keep the surfaces wet with cold, undiluted fluid.

c. De-icing fluids should not be used to remove heavy accumulations of snow. The snow absorbs wasteful amounts of the fluid, forming a slush which is very hard to remove. This slush will get into the control surface hinges and freeze, causing added difficulty. If snow is expected, wing and tail covers should be used if possible. Apply the fluid before installing the covers. If covers are not available, protect the airplane from heavy accumulations of snow by sweeping or brushing the surfaces during the snowfall.

2-99. De-icing fluid should be applied as a fine spray to prevent wastage. A type MB-3 or type MB-4 spray outfit is recommended for this purpose. Cold fluid may be applied with a mop, broom, or soft bristle brush if spray equipment is not available. Spray nozzles may be fabricated if desired as follows *(see figure 2-57)*. A bent tube nozzle is made by drilling about 60 holes (0.0430-inch diameter) on one side of a tube, capping, and bending the tube to provide about a 90-degree fan spray. A nipple nozzle is made from a one inch pipe nipple with about 25 0.512-inch holes drilled in one side, over an arc of about 90 degrees. The pipe cap nozzle is made by drilling a cap with 0.0312-inch holes in the center, and 0.0469-inch holes toward the edges, all radiating from a point at the base of the cap.

2-100. CHARACTERISTICS AND PRECAUTIONS FOR FLUID DE-ICING AND DEFROSTING.

a. De-icing fluid, Specification MIL-A-8243A, is mildly toxic and contact with skin or eyes should be avoided. Prolonged exposure or breathing of air containing more than 1000 parts per million should be avoided. Personnel should stay on the windward side during spray or brush application, and eye protective equipment should be worn.

b. De-icing fluids contain ethylene glycol, and solutions resulting from their dilution with melted ice or rain cause flaking of cement. This damage can be prevented or minimized by treating the pavement, prior to exposure, with light seal coats of linseed oil. The fluid is not corrosive or destructive to metals, rubber, paint or dope.

c. Do not apply fluid to windshields or transparent panels, as transparency is lost while the fluid remains on the panel.

d. If spilled on gloves or clothing, fluid will destroy the insulating qualities. Serious frostbite can result if the fluid contacts the skin at low temperatures.

e. Do not use excessive quantities of the fluid around heater or air intake ducts to prevent toxic fumes from entering the airplane prior to takeoff.

f. Although the flash point is above 93°C (200°F), use care when spraying around heater and engine exhausts.

2-101. SERVICING OXYGEN TANKS AND PORTABLE CYLINDERS. Fill the oxygen system with aviator's breathing oxygen, Federal Specification BB-O-925, using only approved USAF filling equipment, or equivalent. Service the oxygen tanks and the portable cylinders as outlined in the following steps.

WARNING

Do not use oil or grease on any part of the oxygen system. Oxygen in contact with oil or grease creates a dangerous fire and explosion hazard. Be sure the oxygen is free of water to prevent danger of fouling the equipment during freezing conditions.

a. Thoroughly clean the filler valve and filler nozzle.

b. Make certain that the shutoff valve is open.

c. Make certain that all regulators are in the OFF position.

d. Press the filler hose nozzle into the system filling connector until the latch clicks, and make certain it is safely secured.

CAUTION

Do not exceed 450-psi pressure from the filling equipment when servicing the oxygen system.

e. Slowly fill the oxygen cylinder to 425 psi. When filling the system, check the pressure reading of the airplane oxygen pressure gage by inserting a master pressure gage into any regulator outlet.

f. Close the filling equipment regulator valve and disconnect the filler hose nozzle from the system filling connector.

WARNING

Handling of filled oxygen cylinders and the sudden release of oxygen under pressure is dangerous. Make certain that the recharger hose valve closes after the portable bottle has been disconnected.

2-102. SERVICING STEAM HEATING SYSTEM. For normal servicing of the steam heating system, add water to the reserve tank. Use distilled water if available, otherwise use drinking water. Drain the system and blow air through the drainpipes every 50-hour inspection period if other than distilled water has been used.

CAUTION

Make certain that the water has cooled before attempting to drain the system.

2-103. LUBRICATION.

2-104. GENERAL LUBRICATION INSTRUCTIONS. Proper lubrication is of vital importance to the operation and continued service of the airplane components. See figure 2-59 for the lubrication requirements.

2-105. APPLYING LUBRICANTS. For information on application of lubricants, refer to figures 2-60 through 2-96, which show where to use the oil can, pressure gun, hand, or the brush as required.

2-106. LUBRICATION REQUIREMENTS FOR VARIOUS CLIMATIC CONDITIONS. Lubrication requirements vary under different climatic conditions. Consider climatic conditions before lubricating the components of the airplane.

2-107. TEMPERATURE CONSIDERATIONS. Lubricate the main and landing gear wheel bearings with grease, high-temperature lubricant, Specification MIL-L-3545. For general oilcan lubrication, summer or winter, use oil, Specification MIL-L-7870. Hand lubricate the exhaust manifold mounting bracket parts subject to high temperature and limited motion with anti-seize compound, Specification MIL-C-5544.

2-108. LUBRICATION IN DUSTY AND SANDY CLIMATES. Dust, dirt, or sand combined with grease, oil, or graphite form grinding compounds. It is important to remove excess lubricants from all moving parts subject to extreme dust conditions. Inspect all points to be lubricated frequently. In desert operations, force out dirt that works into internal grease fittings by lubricating more frequently. Every 50 or 60 hours inspect the control cable sections running over pulleys, drums, or through fairleads for wear of anticorrosion coating. Touch up with compound, Specification MIL-C-16173, Grade IV.

2-109. LUBRICATION IN SALT AIR CLIMATES. Use plenty of oil, grease and rust preventives to prevent corrosion in salt air climates. Service all landing gear fittings immediately after exposure to extremely wet or salty atmospheres.

2-110. LUBRICATION OF BEARINGS. Bearings are lubricated as outlined in the following paragraphs.

2-111. SEALED BEARINGS. Sealed bearings which are used in most pulleys and in many other moving parts where excessive wear is expected, have the grease sealed in and do not ordinarily require additional lubrication.

Note

Do not subject sealed bearings to excessive amounts of cleaning solvents. Solvent seeps through the seals and removes the grease. Wiping or cleaning the outside of a sealed bearing with a cloth moistened with an approved solvent is permissible. Do not saturate the bearing. *Do not* use gasoline to clean bearings, but use solvent, Federal Specification P-S-661. When field conditions make it absolutely necessary, sealed bearings are to be lubricated with grease, Specification MIL-G-3278.

2-112. LUBRICATION OF OPEN—TYPE BEARINGS. Open-type bearings require cleaning and repacking at regular intervals. Figure 2-97 illustrates cleaning and repacking a main wheel bearing, which is typical for any open-type bearing. Remove all old grease with solvent, Federal Specification P-S-661. Where equipment is not available to repack the bearings under pressure, work the grease thoroughly into the bearing races and around the rollers with the palm of the hand until the grease comes out the other side. Applying grease on the outside of the rollers does not lubricate the inner bearing races.

2-113. MISCELLANEOUS LUBRICATION REQUIREMENTS. Miscellaneous lubrication requirements are accomplished as outlined in the following steps.

a. Lubricate the surface control system activating and adjusting screws, and the trim tab screws and nuts with hand grease, Specification MIL-G-7118, as operating conditions warrant. *(See figure 2-98.)*

b. For treatment of air filters, use a mixture of three parts of engine oil, Specification MIL-O-6082, to one part of corrosion-preventive compound, Specification MIL-C-16173.

c. For the location of the lubrication fitting on the control wheel column, see figure 2-98.

2-114. SPECIAL TOOLS AND EQUIPMENT. *(See figures 2-62 through 2-93.)*

2-115. The following illustrations contain special service tools and ground handling equipment designed for use on the C-47 series airplanes. These tools are

C-117 AND C-47 LUBRICATION CHART

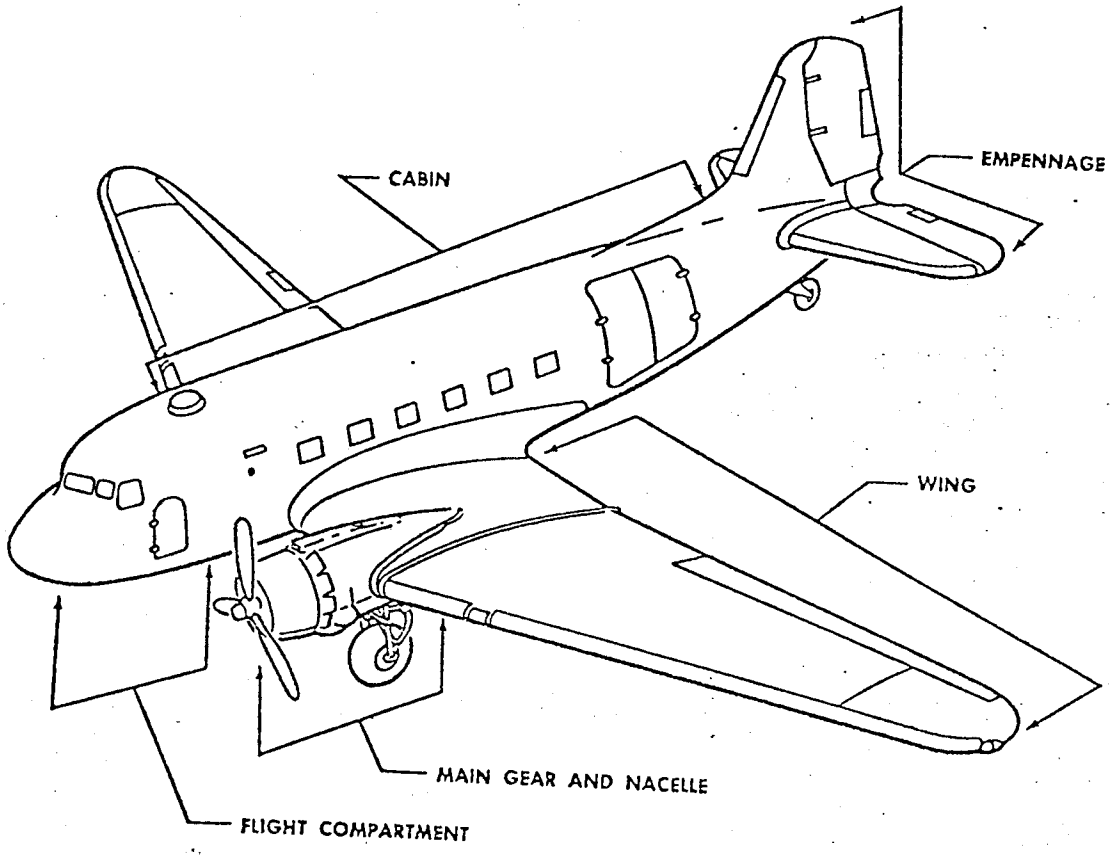

INDEX

GENERAL NOTES 2
SYMBOLS AND TABLE OF LUBRICANTS 3
FLIGHT COMPARTMENT . . . . . 4, 5, and 6
CABIN 7, 8
WING 9
MAIN GEAR AND NACELLE 10, 11
EMPENNAGE 12

Specific sections of the airplane can be easily located by the diagram and index on this page. The illustrations on the following pages show the mechanisms to be lubricated, the lubricants to be used, the methods of application.

Figure 2-59. Lubrication Chart (Sheet 1 of 12)

33,494

GENERAL NOTES

1. TEMPERATURE CONSIDERATION.
   Specified lubrication is designed for operating range of −46°C (−50°F) to 71°C (160°F).

2. ABNORMAL OPERATING CONDITIONS.
   Lubrication frequency intervals expressed are based on an average of 100 flight hours per month. These intervals may vary as to the number of hours of service per month in order to accommodate any abnormal conditions such as extremely wet or salt air, dusty atmospheric conditions, and inactive or storage time. Where inactive or storage time is the consideration and long-time preservation of the airplane is not contemplated, lubricate according to the following table:

Lubrication Schedule While Airplane Inoperative
Every 3 months
Every 6 months

3. LUBRICATION APPLICATION:
   a. Cleanliness is essential to good lubrication procedure. Clean and dry grease guns and oilcan before filling. Wash brushes, if dirty, in approved solvent and dry thoroughly before use. Use only lubricants which are perfectly clean.
   b. Wipe grease fittings, oil holes, etc, with clean dry cloths before lubricating. Remove any dirt or rust from surfaces to be lubricated.
   c. Work moving parts, if practicable, to insure thorough lubrication.
   d. Force grease into fittings until all old grease is extruded, unless otherwise noted.
   e. Fill oilholes to near full, adding oil until the level does not drop. Controllable-type squirt oil cans are recommended for oil application.
   f. After any lubrication, clean surplus lubrication from all but actual working surfaces.
   g. Before applying lacquer-base lubricating graphite, clean surfaces with approved solvent for good adhesion.

4. ANTIFRICTION BEARINGS.
   a. All antifriction bearings are lubricated with Specification MIL-G-3278 grease (Symbol GLT) unless otherwise specified; those devoid of grease fittings need not be lubricated except at major overhaul.
   b. Do not oil such bearings or expose them to spray from steam or chemical cleaning. When necessary to clean exterior bearing surfaces, wipe with a cloth dampened with Federal Specification P-S-661 solvent.

5. FRICTION BEARINGS.
   a. Friction bearings of the porous sintered-type are prelubricated with Specification MIL-L-7870 oil (Symbol OGP). An occasional squirt-can oiling of such a bearing will extend its service life.

6. CONTROL CABLES.
   Every 1000 hours, or as conditions warrant, perform the following:
   a. Inspect the coating on cable lengths running on pulleys, drums, and in fairleads for surface bareness. If necessary, touch up the bare surfaces with corrosion-preventive compound Specification MIL-C-16173 Grade IV (Symbol CPH) sufficiently fluidized with Federal Specification P-S-661 solvent to permit cable strand penetration by the compound and to avoid a tacky-coated surface. For surface cleaning of the cables, use a cloth moistened with Federal Specification P-S-661 solvent.
   b. Oil cable clevis turning point with Specification MIL-L-7870 (Symbol OGP).

7. MISCELLANEOUS.
   a. Lube requirements under wheel bearings refer to: tire changes, brake checks, landing on wet or flooded airports, airplane spray cleaning without wheel covers, and stipulated inspection period.
   b. When small flush-type grease fittings, Alemite No. 1877 or Shafer G3 are called out, use the special grease gun adapter, Stewart Warner G-318049, or Air Force Stock No. 8042-318049.
   c. This lubrication chart does not cover engines, instruments, and certain accessories. Follow manufacturers' recommendations or applicable technical orders.
   d. Apply lubricant, Specification MIL-G-3278 (Symbol GLT) to control surface adjusting screws as necessary.
   e. Felt wipers installed at piston rod end of hydraulic actuating cylinders must be saturated with hydraulic oil every 200 to 260 hours.
   f. Lubricate all points shown on lubrication chart at major overhaul. This is in addition to specified periodic service.
   g. Fill grease-type gear boxes at least one-third but not over one-half full unless otherwise specified (as by instruction plate).

Figure 2-59. Lubrication Chart (Sheet 2 of 12)

33,495

APPLICATION SYMBOLS

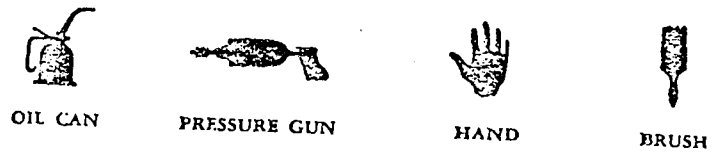

TABLE OF LUBRICANTS

SYMBOL	SPECIFICATION	TYPE OF LUBRICANT
GLT	MIL-G-3278	Grease — Low Temperature
GH	MIL-L-3545	Grease — High Temperature, Water Resistant
GSG	MIL-G-7118	Grease — Screw Gear
GB	MIL-L-7711	Grease — General Purpose
GG	MIL-G-7187	Grease — Graphite
OGP	MIL-L-7870	Oil — General Purpose, Low Temperature
	None	Dixon G-711 Graphite Stick
	None	MIL-G-6711 Plus Binder, Commercially Available
CPH	MIL-C-16173 Grade IV	Compound — Corrosion Preventive, Hard film

EXAMPLE OF CODING

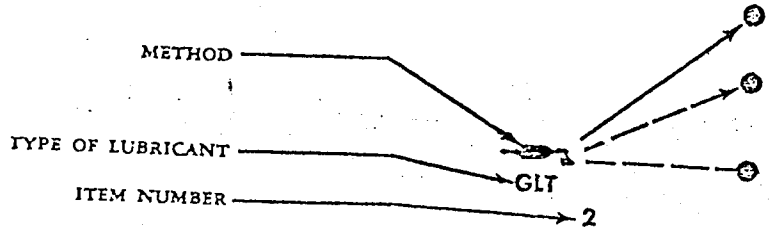

Solid line with arrowhead indicates a specific lubrication point.

Broken line with arrowhead indicates a specific lubrication point and identical point or points of the item, not shown.

Omission of arrowhead on broken lines indicates localized area requiring lubrication, the point or points of which are not specifically shown.

The example above indicates item (2) to be lubricated as noted by pressure gun, using lubricant GLT.

The number of items requiring lubrication and the number of lubricating points of the item are noted under "Items to be Lubricated."

Figure 2-59. Lubrication Chart (Sheet 3 of 12)

33.496

FLIGHT COMPARTMENT

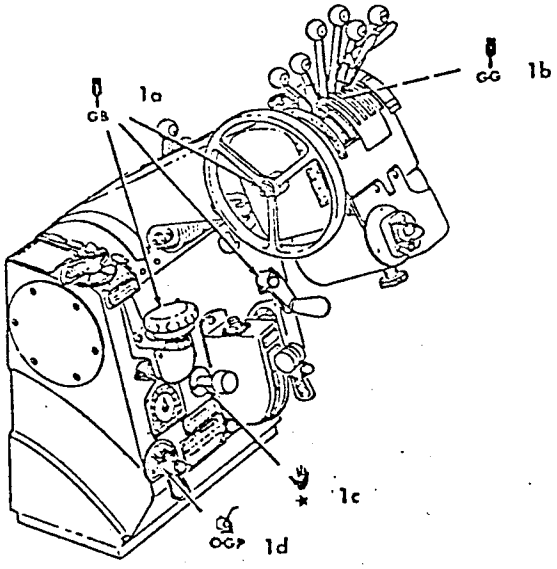

1. CONTROL PEDESTAL

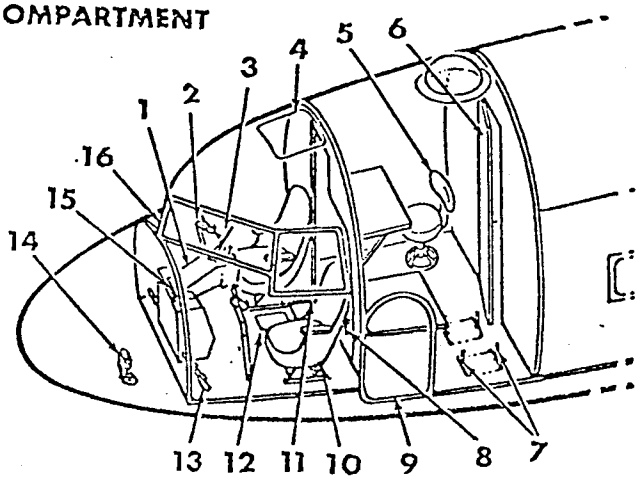

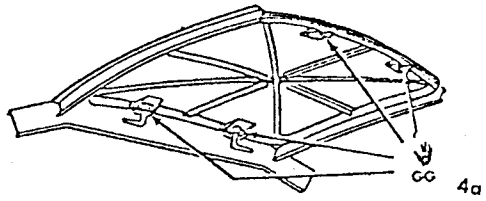

4. EMERGENCY ESCAPE HATCH

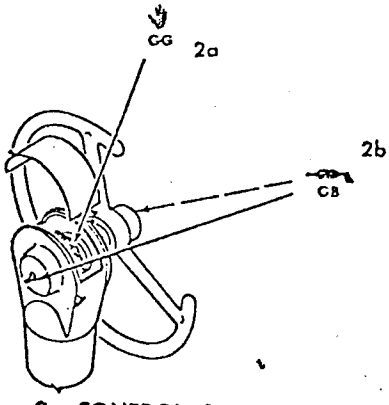

2. CONTROL COLUMN

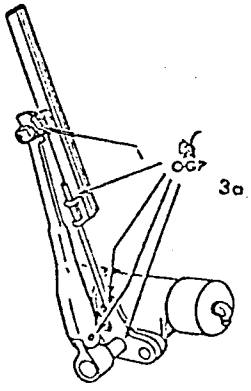

3. WINDSHIELD WIPER

TABLE OF LUBRICANTS

Symbol	Specification	Type of Lubricant
OGP	MIL-L-7870	Oil — General Purpose
GG	MIL-G-7187	Grease — Graphite
*	None	Graphite-Stick, Dixon G-711
GB	MIL-G-7711	Grease — General Purpose

ITEMS TO BE LUBRICATED

1. CONTROL PEDESTAL
   a. Aileron, elevator and rudder tab, gear train — apply a light coat of grease.
   b. Lever and lever latch, sliding surfaces — apply a coat of grease.
   c. Parking brake control rod, sliding surface — apply light film of graphite stick.
   d. Gyro-pilot shutoff, turning point — oil lightly.
2. CONTROL COLUMN (TWO)
   a. Chain and sprocket — remove cover, apply a light coat of grease.
   b. Control wheel shaft bearings—apply to two grease fittings.
3. WINDSHIELD WIPER (TWO)
   a. Wiper, turning points — oil lightly and wipe off excess.
4. EMERGENCY ESCAPE HATCH
   a. Latch and catches, mating surfaces — apply a light coat of grease.

(Continued on Sheet 5)

Figure 2-59. Lubrication Chart (Sheet 4 of 12)

33,497

FLIGHT COMPARTMENT

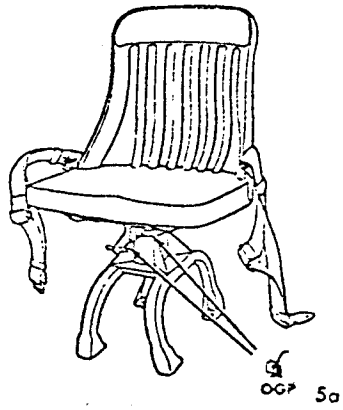

5. RADIO OPERATOR'S SEAT

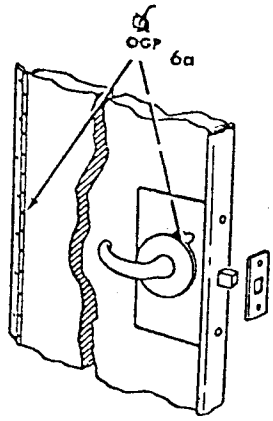

6. INTERIOR DOORS (TYPICAL IN NOSE AND CABIN AREAS)

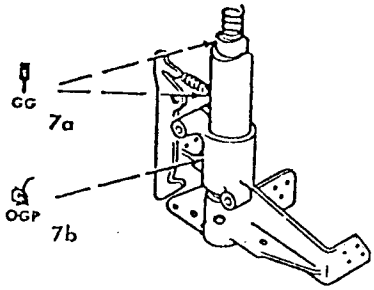

7. BATTERY SUPPORT ASSEMBLY

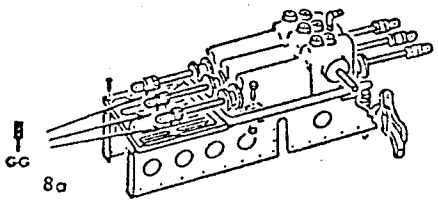

8. AUTOMATIC PILOT UNITS

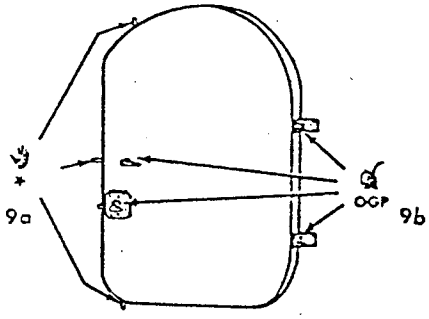

9. FRONT CARGO LOADING DOOR

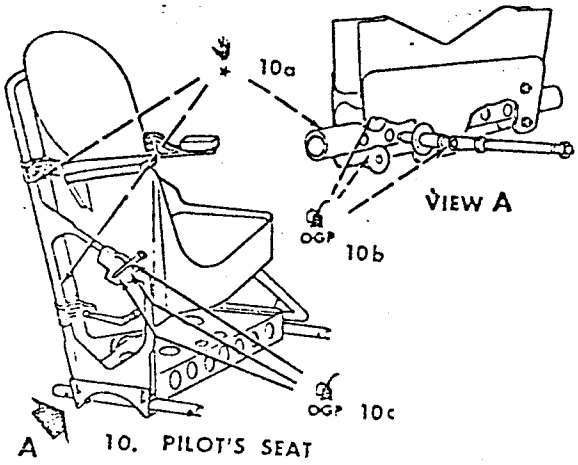

10. PILOT'S SEAT

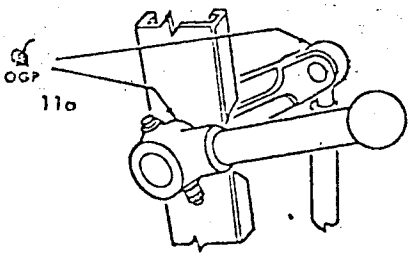

11. WOBBLE PUMP CONTROL

TABLE OF LUBRICANTS

Symbol	Specification	Type of Lubricant
OGP	MIL-L-7870	Oil — General Purpose
GG	MIL-G-7187	Grease — Graphite
*	None	Graphite-Stick, Dixon G-711

ITEMS TO BE LUBRICATED

(Continued from Sheet 4)

5. RADIO OPERATOR'S SEAT
   a. Swivel mating surfaces and locking mechanism — oil lightly.
6. INTERIOR DOORS
   a. Latch and hinge, turning points — oil lightly and wipe off excess. Do not allow oil to come in contact with finished surfaces.
7. BATTERY SUPPORT ASSEMBLIES (TWO)
   a. Guide tubes, sliding surfaces — apply a light coat of grease.
   b. Locking mechanism, turning points — oil lightly.
8. AUTOMATIC PILOT UNITS
   a. Cable arm, guides (three) — apply a thin coat of graphite grease.
9. FRONT CARGO LOADING DOOR
   a. Latch bolt, sliding surface — apply a light film of graphite stick.
   b. Hinges, latch turning mechanism and catch hold-open mechanism, turning points — oil lightly.
10. PILOT'S SEAT (TWO)
   a. Forward and aft slide tubes, up and down slide tubes, mating surfaces — apply a light film of graphite stick.
   b. Slide roller pins, slide mechanism, turning points, lock pin mechanism, turning points — oil lightly.
   c. Shoulder harness inertial reel control lock assembly, sliding surfaces and turning point — oil lightly.
11. WOBBLE PUMP CONTROL
   a. Linkage, turning points — oil lightly.

(Continued on Sheet 6)

Figure 2-59. Lubrication Chart (Sheet 5 of 12)

33,498

FLIGHT COMPARTMENT

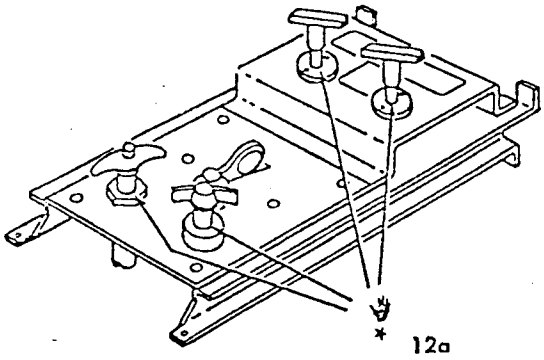

12. FIRE EMERGENCY CONTROL PANEL

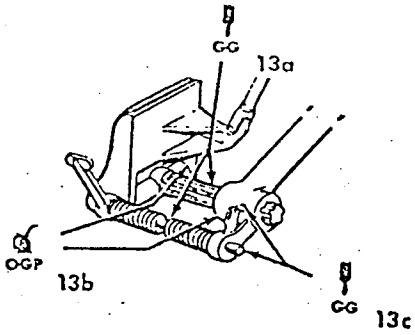

13. RUDDER PEDALS

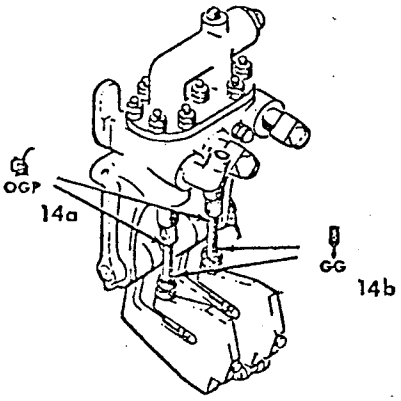

14. POWER BRAKE CONTROL VALVE

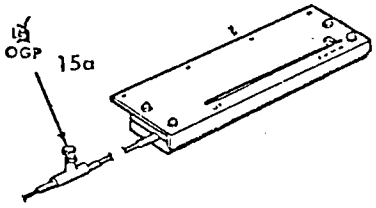

15. WING FLAP INDICATOR TUBE

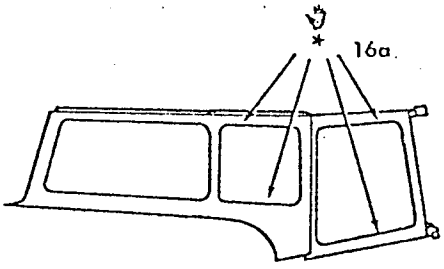

16. FLIGHT COMPARTMENT WINDOWS

TABLE OF LUBRICANTS

Symbol	Specification	Type of Lubricant
OGP	MIL-L-7870	Oil — General Purpose
GG	MIL-G-7187	Grease — Graphite
*	None	Graphite-Stick, Dixon G-711

ITEMS TO BE LUBRICATED

(Continued from Sheet 5)

12. FIRE EMERGENCY CONTROL PANEL
    a. Control rods (four), sliding surfaces — apply a light film of graphite stick.
13. RUDDER PEDALS (FOUR)
    a. Pedal shaft splines — apply a light coat of grease.
    b. Shaft, turning points — oil lightly.
    c. Locking pin and torque shaft, sliding surface — apply a light film of grease.
14. POWER BRAKE CONTROL VALVE
    a. Piston rod-link, attach point (two) — oil lightly.
    b. Links (two), ball end — apply a light coat of grease.
15. WING FLAP INDICATOR TUBE
    a. Add oil slowly at fitting in line directly below indicator; fill to level of fitting.
16. FLIGHT COMPARTMENT WINDOWS
    a. Track, top and bottom, sliding area — apply a light film of graphite stick.

Figure 2-59. Lubrication Chart (Sheet 6 of 12)

33,499

CABIN

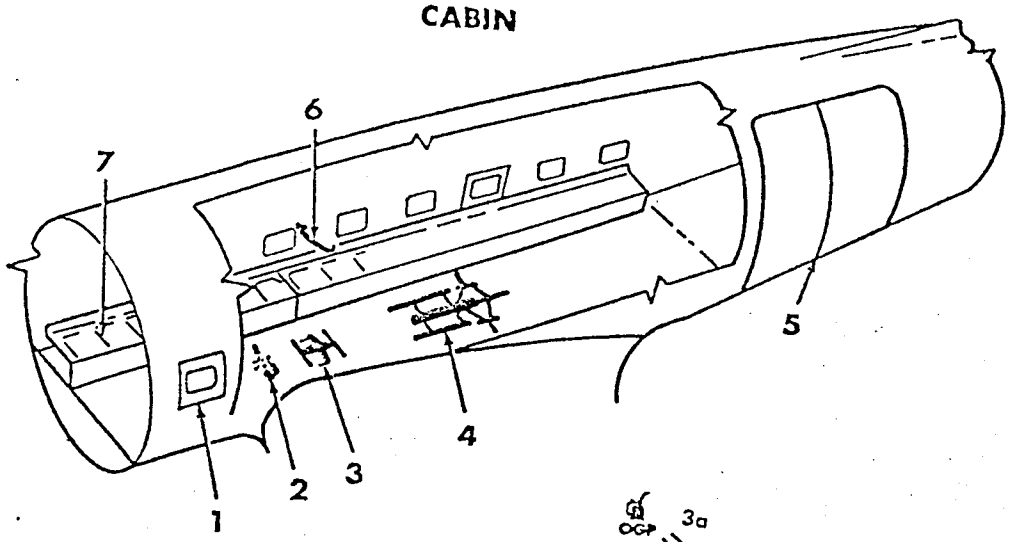

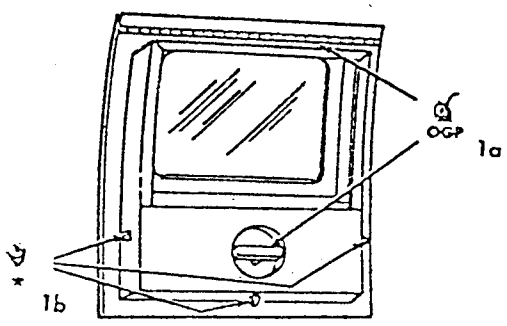

1. EMERGENCY EXITS

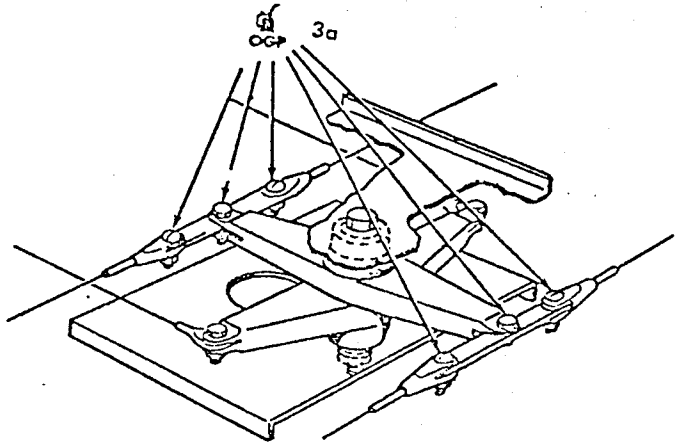

3. AILERON CABLE BELLCRANKS

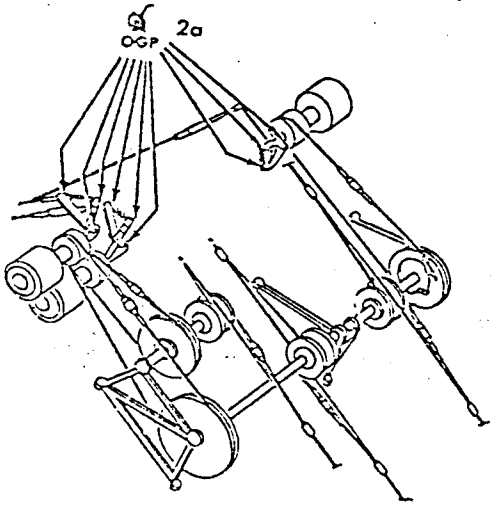

2. AUTOMATIC PILOT SERVO UNITS

TABLE OF LUBRICANTS

Symbol	Specification	Type of Lubricant
OGP	MIL-L-7870	Oil — General Purpose
★	None	Graphite-Stick, Dixon G-711

ITEMS TO BE LUBRICATED

1. EMERGENCY EXITS
   a. Piano hinge, latch operating mechanism turning points — oil lightly and wipe off excess. (Do not allow oil to come in contact with finished surfaces.)
   b. Latch bolts, sliding surfaces — apply a light film of graphite stick.
2. AUTOMATIC PILOT SERVO UNITS (THREE)
   a. Link actuating levers, turning points — oil lightly.
3. AILERON CABLE BELLCRANKS
   a. Cable connector links (two), turning points — oil lightly.

(Continued on Sheet 8)

Figure 2-59. Lubrication Chart (Sheet 7 of 12)

CABIN

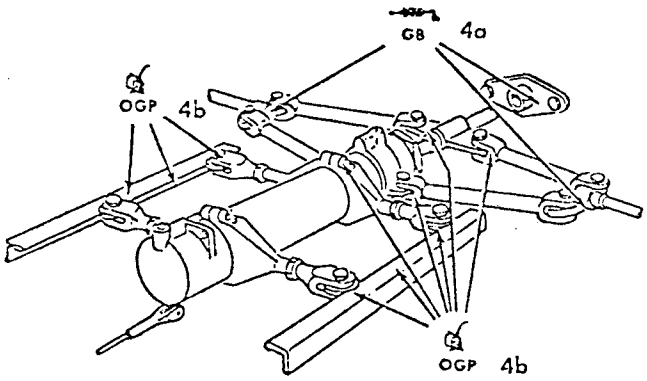

4. WING FLAP ACTUATING CYLINDER ASSEMBLY

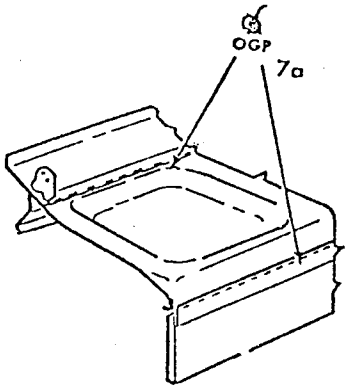

7. TROOP SEATS

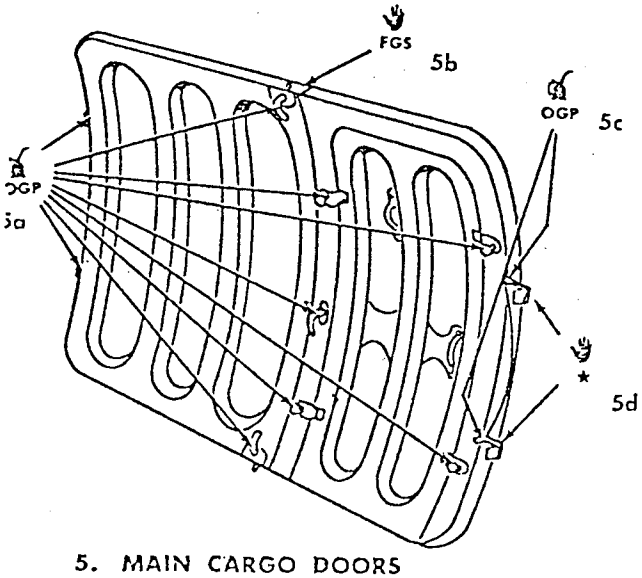

5. MAIN CARGO DOORS FORWARD AND AFT SECTIONS (C-47 SERIES ONLY)

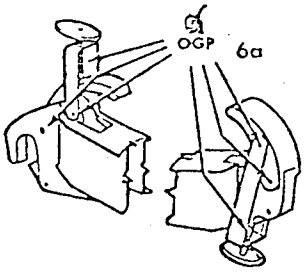

6. LITTER SUPPORT BRACKETS

TABLE OF LUBRICANTS

Symbol	Specification	Type of Lubricants
GB	MIL-L-7711	Grease — General Purpose
★	None	Graphite-Stick, Dixon G-711
OGP	MIL-L-7870	Oil — General Purpose

ITEMS TO BE LUBRICATED

(Continued from Sheet 7)

4. WING FLAP ACTUATING CYLINDER ASSEMBLY
   a. Support assemblies (three) — apply to one grease fitting each.
   b. Guides, operating rods and roller turning points — oil lightly.
5. MAIN CARGO DOORS (FORWARD AND AFT SECTIONS)
   a. Hinges, locks, and latch, turning points — oil lightly.
   b. Latch bolts — apply a light film of graphite stick.
   c. Emergency release mechanism, turning points — oil lightly.
   d. Emergency release pins — apply a light film of graphite stick.
6. LITTER SUPPORT BRACKETS
   a. Linkage, turning points — oil lightly.
7. TROOP SEATS
   a. Hinge pins, turning points — thread — oil lightly.

Figure 2-59. Lubrication Chart (Sheet 8 of 12)

33,501

WING

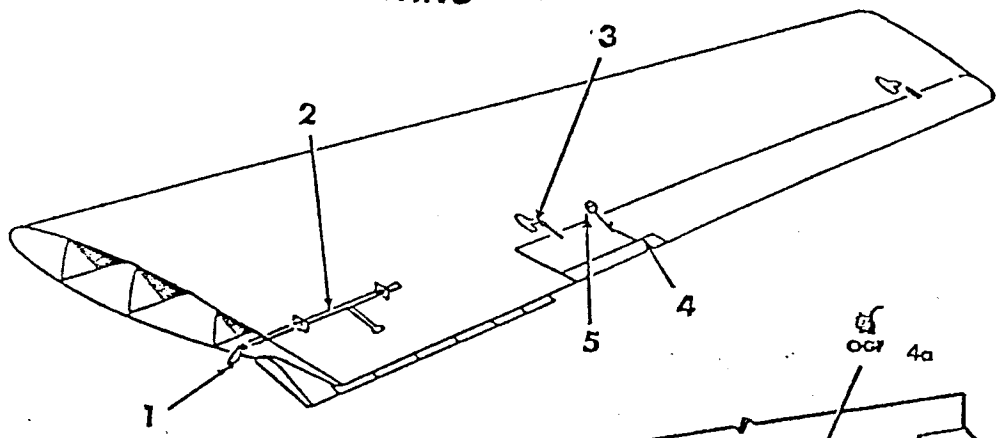

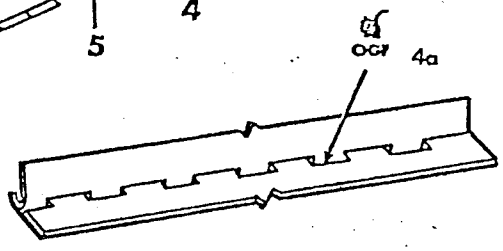

4. TRIM TAB HINGE

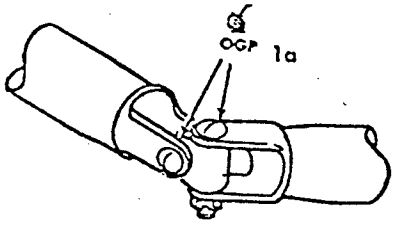

1. WING FLAP UNIVERSAL JOINTS

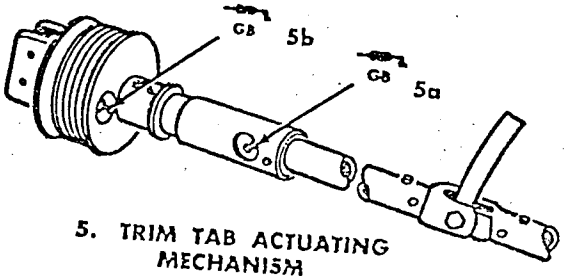

5. TRIM TAB ACTUATING MECHANISM

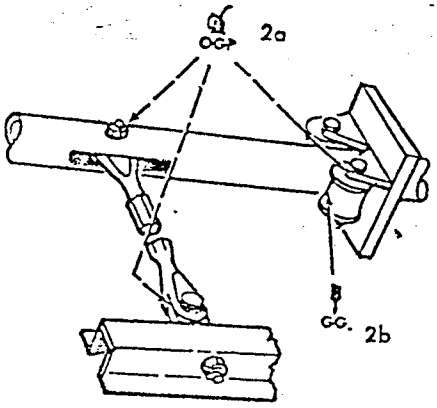

2. WING FLAP ACTUATING MECHANISM

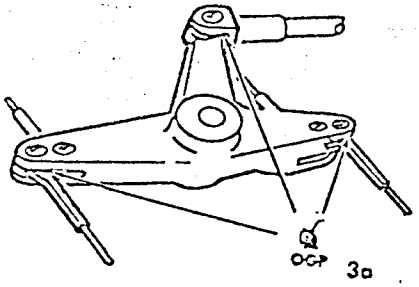

3. AILERON CRANK ASSEMBLY 2 LH AND 2 RH

TABLE OF LUBRICANTS

Symbol	Specification	Type of Lubricant
GB	MIL-L-7711	Grease — General Purpose
GG	MIL-G-7187	Grease — Graphite
OGP	MIL-L-7870	Oil — General Purpose

ITEMS TO BE LUBRICATED

1. WING FLAP UNIVERSAL JOINT (ONE EACH WING)
   a. Turning points — oil lightly.
2. WING FLAP ACTUATING MECHANISM
   a. Turnbuckles and roller, turning points — oil lightly.
   b. Roller tube guide, mating surface — apply a light film of grease.
3. AILERON CRANK ASSEMBLY (2 LH, 2 RH)
   a. Linkage, turning points — oil lightly.
4. TRIM TAB HINGE
   a. Piano hinge — oil lightly.
5. TRIM TAB ACTUATING MECHANISM
   a. Tab control rod, acme thread — apply to one grease fitting.
   b. Tab cable drum—apply to one grease fitting.

Figure 2-59. Lubrication Chart (Sheet 9 of 12)

MAIN GEAR AND NACELLE

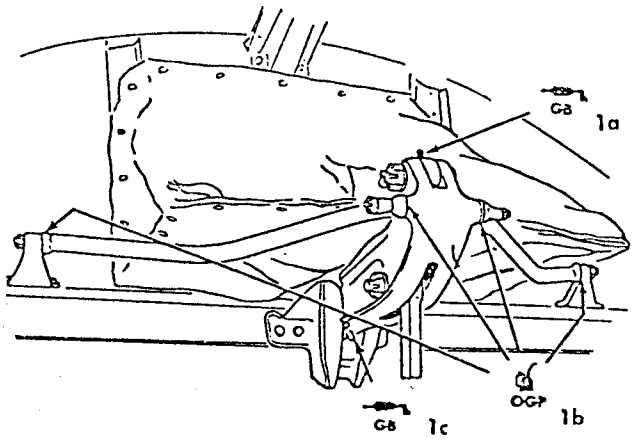

1. BUNGEE ARM ASSEMBLY

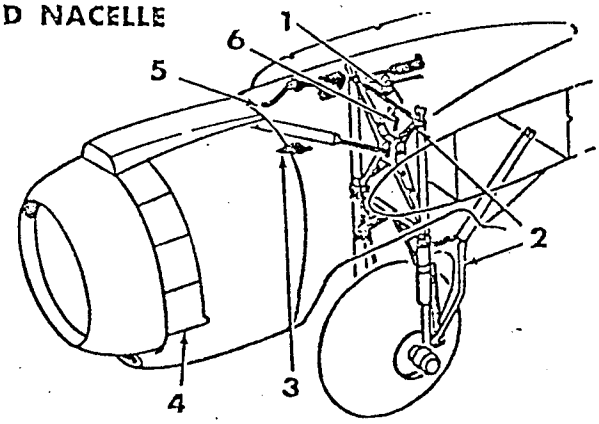

TABLE OF LUBRICANTS

Symbol	Specification	Type of Lubricant
GB	MIL-L-7711	Grease — General Purpose
GH	MIL-L-3545	Grease — High Temperature
OGP	MIL-L-7870	Oil — General Purpose

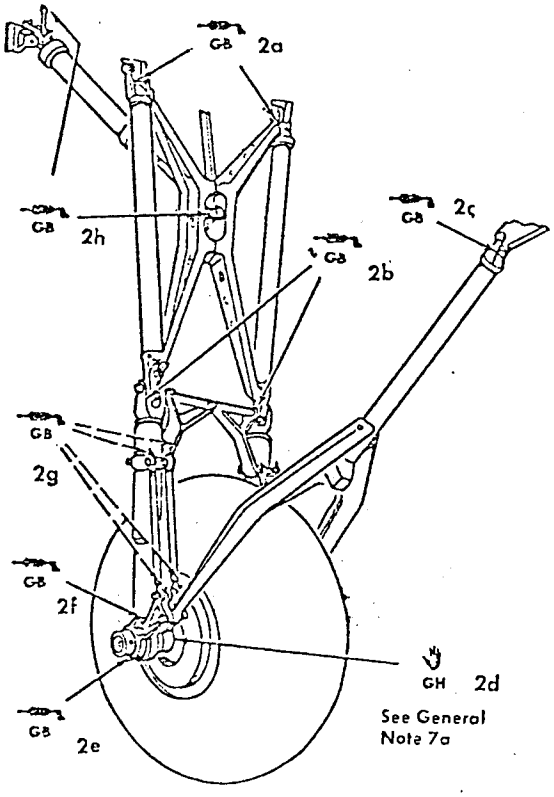

2. MAIN GEAR

ITEMS TO BE LUBRICATED

1. BUNGEE ARM ASSEMBLY (ONE EACH NACELLE)
   a. Toggle bungee yoke, attach point — apply to one grease fitting.
   b. Toggle brace rods (two), turning points — oil both ends of each rod.
   c. Toggle spar bracket, attach point — apply to one grease fitting.
2. MAIN GEAR (TWO)
   a. Truss, upper attach points — apply to two grease fittings (front side).
   b. Truss, lower attach points — apply to two grease fittings.
   c. Rear brace strut, upper attach point — apply to one grease fitting.
   d. Wheel bearings—clean old grease from axle bearings, apply a light coat of lubricant GH to axle and pack bearings. (See General Note 7a).
   e. Rear brace strut, lower attach points — apply to two grease fittings.
   f. Link assembly (two), link shock strut, attach point — apply to one grease fitting each link.
   g. Link arm assembly (four arms) — apply to eight grease fittings.
   h. Retract cylinder, upper attach point — apply to grease fitting accessible through cover plate on top of nacelle and to grease fitting at lower attach point to truss.

(Continued on Sheet 11)

Figure 2-59. Lubrication Chart (Sheet 10 of 12)

33,503

MAIN GEAR AND NACELLE

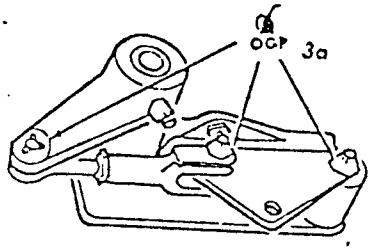

3. CARBURETOR HEAT SHUTTER

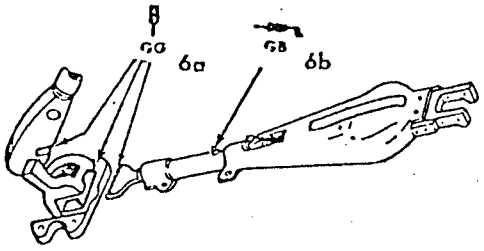

6. MECHANICAL LATCH DOWNLOCK

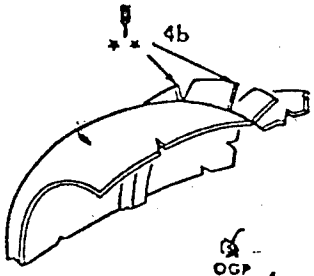

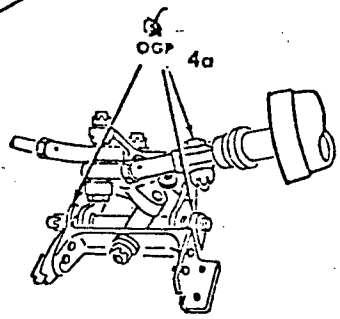

4. COWL FLAP ASSEMBLY

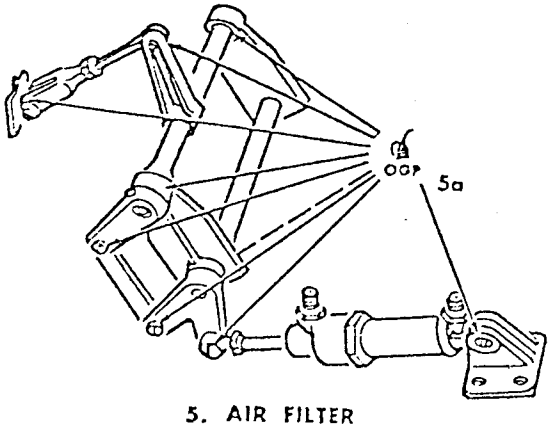

5. AIR FILTER

TABLE OF LUBRICANTS

Symbol	Specification	Type of Lubricant
GB	MIL-L-7711	Grease — General Purpose
GG	MIL-G-7187	Grease — Graphite
OGP	MIL-L-7870	Oil — General Purpose
* *	None	MIL-G-6711 Plus Binder Commercially Available

ITEMS TO BE LUBRICATED

(Continued from sheet 10)

3. CARBURETOR HEAT SHUTTER
   a. Operating linkage turning points — oil lightly.
4. COWL FLAP ASSEMBLY
   a. Hinges one per flap, 14 flaps per assembly, — turning points — oil lightly.
   b. Flap rubstrips, previously treated surfaces — clean rub area with P-S-661 solvent (Stoddard-type), wipe dry. Install Phenolic Sheet MIL-G-6787.
5. AIR FILTER
   a. Operating linkage, turning points — oil lightly.
6. MECHANICAL LATCH DOWNLOCK (ONE PER GEAR, TWO GEARS)
   a. Latch face and actuating piston hook — apply a light film of graphite grease.
   b. Cylinder assembly — apply to one grease fitting.

Figure 2–59. Lubrication Chart (Sheet 11 of 12)

EMPENNAGE

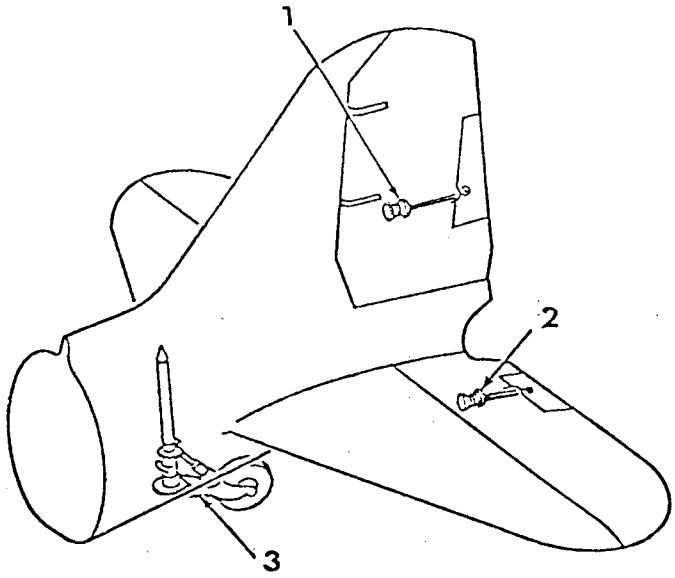

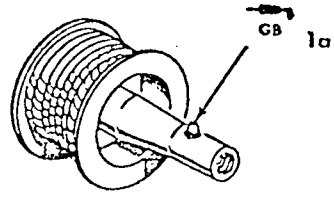

1. RUDDER TRIM TAB ACTUATOR (ONE)

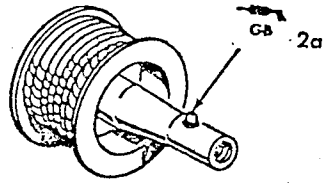

2. ELEVATOR TRIM TAB ACTUATOR (TWO)

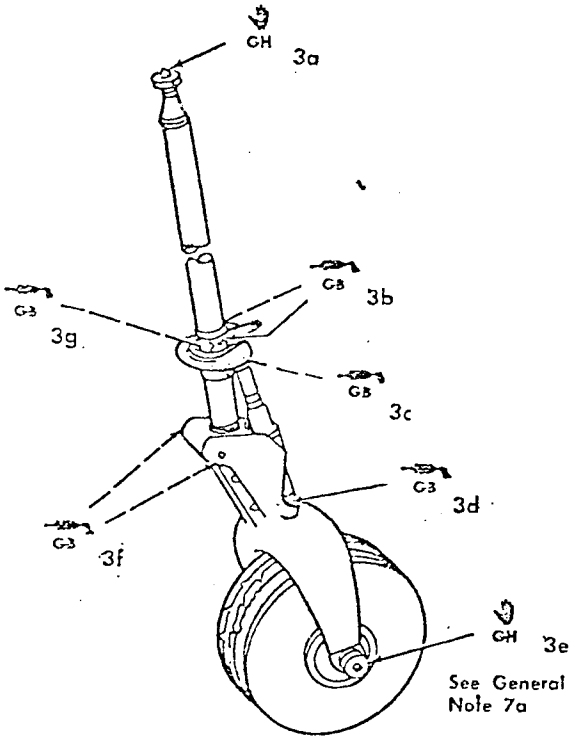

3. TAIL WHEEL ASSEMBLY

TABLE TO BE LUBRICATED

Symbol	Specifications	Type of Lubricant
GB	MIL-L-7711	Grease — General Purpose
GH	MIL-L-3545	Grease — High-Temperature

ITEMS TO BE LUBRICATED

1. RUDDER TRIM TAB ACTUATOR (ONE)
   a. Tab control rod, acme thread — apply to one grease fitting.
2. ELEVATOR TRIM TAB ACTUATOR (ONE LEFT AND ONE RIGHT)
   a. Tab control rod, acme thread — apply to one grease fitting.
3. TAIL WHEEL ASSEMBLY
   4 a. Spindle upper ball joint remove lock nut, raise airplane to expose ball joint, clean and repack.
   b. Lock assembly — apply to two grease fittings (one each side).
   c. Spindle, link attach point — apply to one grease fitting (left side).
   d. Shock strut, fork attach point — apply to one grease fitting.
   2 e. Tail wheel bearing — clean old grease from axle and bearings — apply a light coat of lubricant (Symbol GH) to axle and pack bearings.
   f. Spindle, fork attach points — apply to two grease fittings.
   g. Spindle, center joint — apply to one grease fitting (top front).

Figure 2-59. Lubrication Chart (Sheet 12 of 12)

33,505

available by requisition through supply depots in the United States and overseas. The illustrations contain sufficient information to enable personnel to manufacture the tools locally.

2-116. AIRFRAME GROUP MAINTENANCE.

2-117. GENERAL DESCRIPTION. The following paragraphs cover description, removal, disassembly, minor repair, assembly, and installation of the principal components and systems of the airplane. For information on repairs of the airplane structure, overhaul and depot repairs of engines, accessories, instruments, and other installed equipment, refer to the applicable technical order.

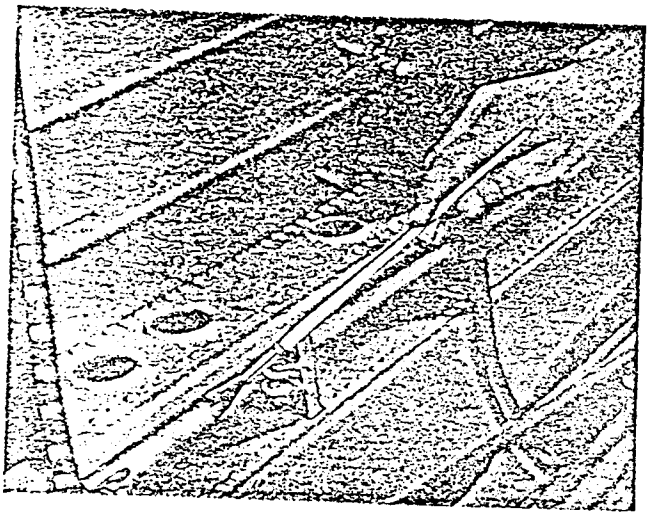

33,506

Figure 2-60. Application of Lubricant to Wing Flaps Actuating Rod

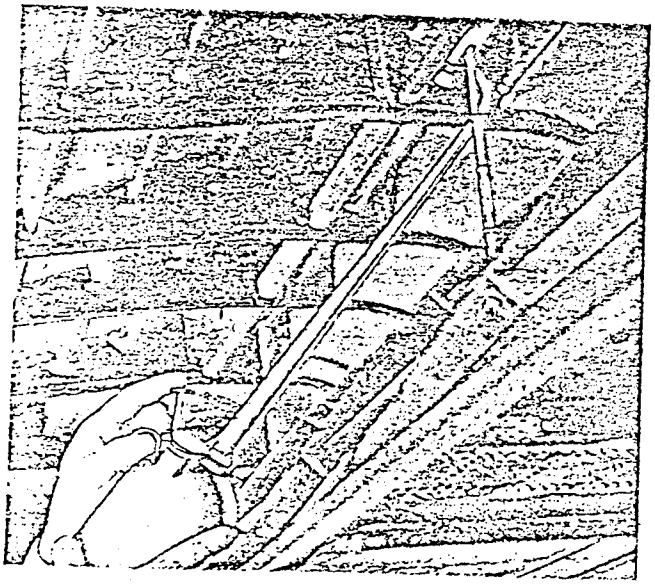

33,507

Figure 2-61. Application of Lubricant to Wing Flaps Actuating Rod Universal Joint

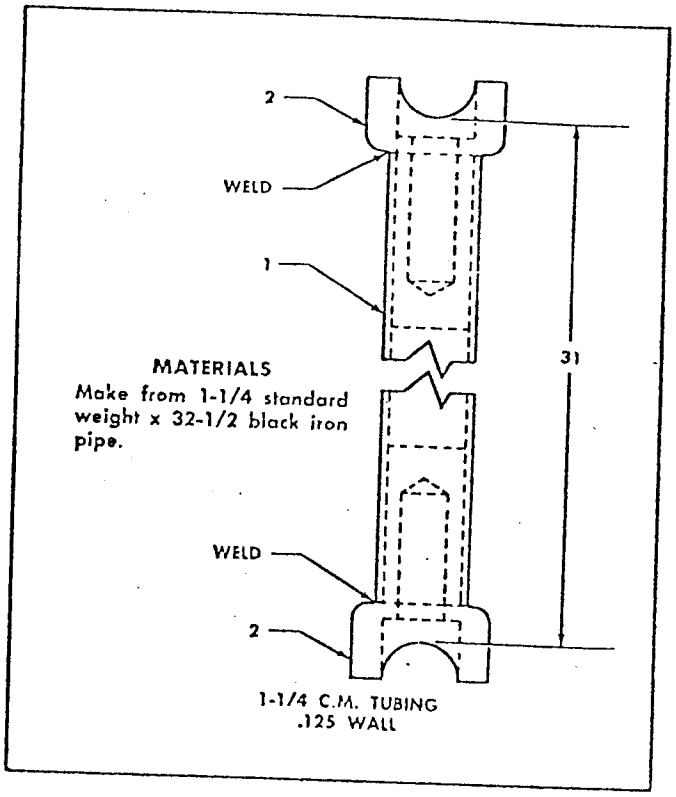

Figure 2-62. Bungee Spreader Bar

V2-10

2-118. WING.

2-119. GENERAL DESCRIPTION. The wing is an aluminum alloy structure consisting of a center section, to which two nacelles are permanently attached, and two outer wing panels. The center wing section is attached to the fuselage by means of eight vertical fittings *(see figure 2-99)*. The outer wing panels are attached to the center wing section with steel bolts and elastic stop nuts. A floating rib *(see figure 2-100)* is located between the center section and each outer wing to distribute the stresses evenly. The tips of the outer wing panels are attached with screws.

Note

For maintenance of the ailerons attached to the outer wing panels, refer to Section XI.

2-120. REMOVAL AND INSTALLATION OF WING COMPONENTS. Removal and installation of the wing components are accomplished as outlined in the following paragraphs.

2-121. OUTER WING PANELS.

2-122. The two outer wing panels consist of three aluminum alloy spars. The inboard part of the trailing section is attached to the rear spar with special bolts and stop nuts on some airplanes, and on others it is

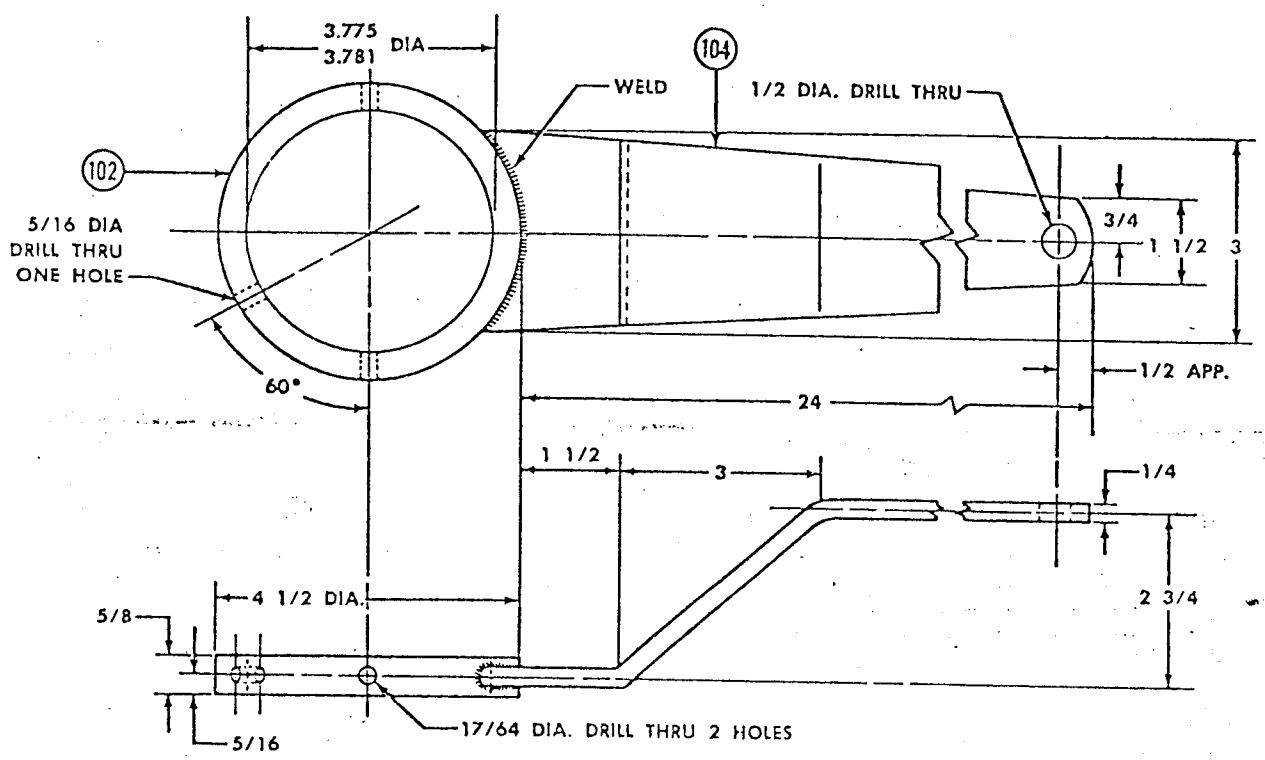

MANUFACTURING NOTES

1. Heat treat
   a. Rockwell 15N 79-80.5
   b. Case depth .020-.025
2. Sandblast and cadmium plate

MATERIALS

Item No.	Quantity	Description
104	1	1/4 x 3 x 25-3/4 SAE 1020 C.R.
102	1	4-1/2 OD x 3/8 wall x 3/4 SAE 1015 tube

Figure 2-63. Main Landing Gear Axle Nut Wrench (K-20101)

VZ-11

riveted to the rest of the wing structure. A de-icing boot is installed on the leading edge of each panel.

2-123. REMOVAL OF OUTER WING PANEL.

a. Remove the fairing strip which covers the wing attachment angles and bolts by detaching the hold-down clips and removing the screws at the trailing edge fitting. *(See figure 2-101.)*

b. Detach the small cap cover installed on the underside of the trailing edge of the wing by removing the screws.

c. Working through the inboard access door located on the underside of the outer wing panel, disconnect the aileron control cables (and also the aileron trim tab control cables, if it is the right outer wing).

Note

Before disconnecting the right aileron tab cables, tape the tab drums located in the control pedestal and in the outer wing panel to prevent the cables from unwinding.

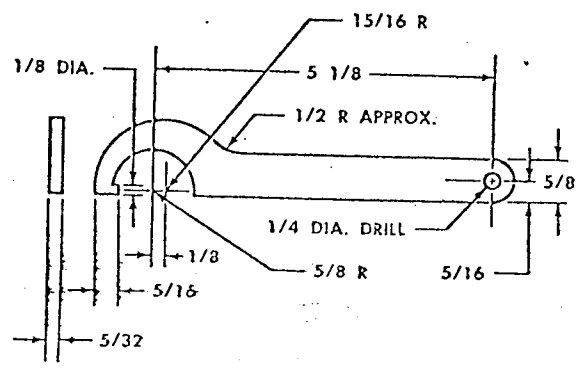

MANUFACTURING NOTES

1. Heat treat to Rockwell C40-C43
2. Cadmium plate

MATERIALS

Make from 3/16 x 1-1/16 x 6-5/8 SAE 1095 H.R.

VZ-12

Figure 2-64. Tail Wheel Spindle Ball End Wrench (K-20801)

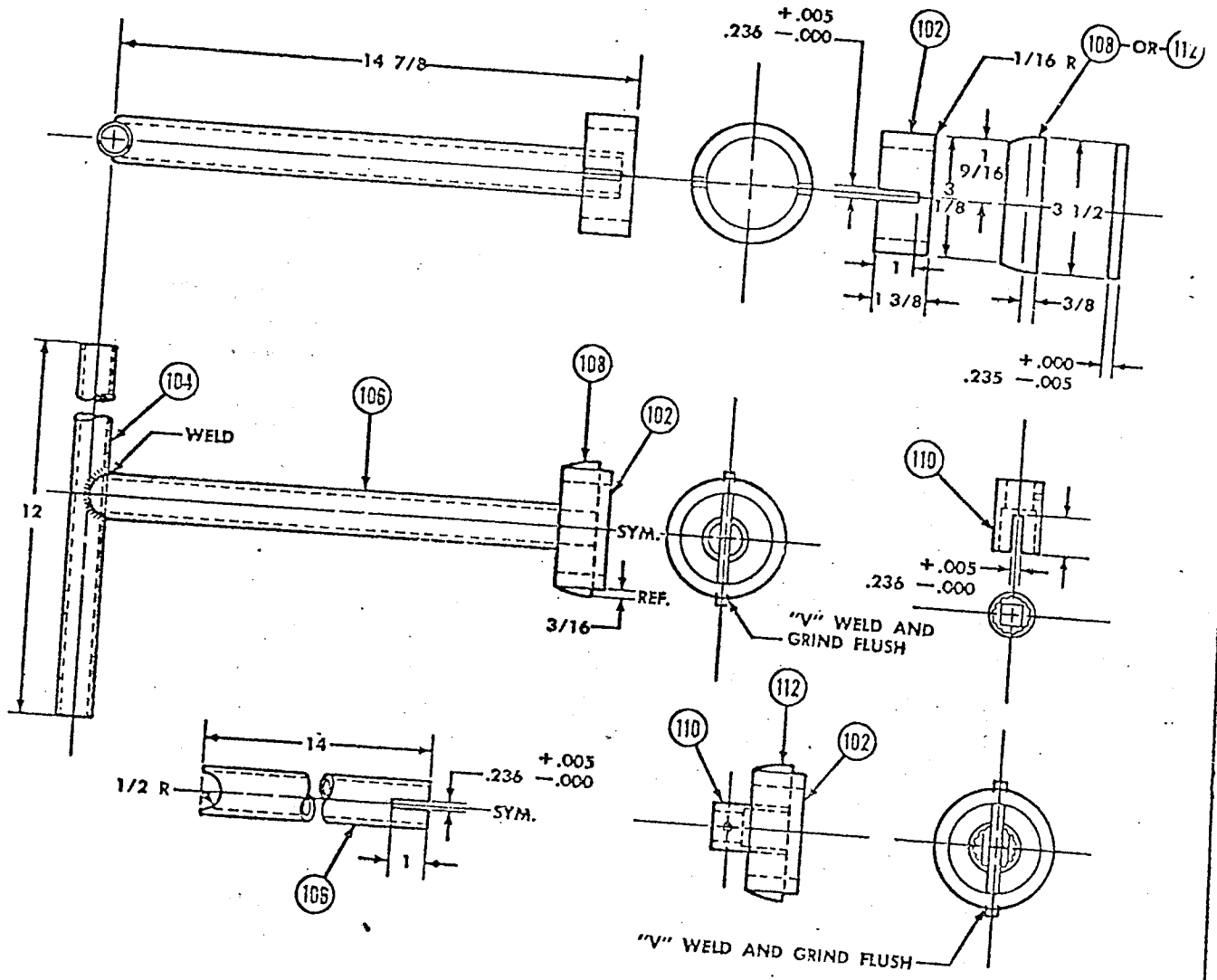

MANUFACTURING NOTES

1. Heat treat 102, 104, 106, 108
   a. Rockwell 15N 80.0-82.5
   b. Case depth .015 to .020
2. Heat treat 102, 110, 112
   a. Rockwell C40-45
3. Cadmium plate

MATERIALS

Item No.	Quantity	Description
112	1	1/4 x 1 x 3-5/8 SAE 4130 H.R.
110	1	No. 5532 plomb tool socket (or equivalent)
108	1	1/4 x 1 x 3-5/8 SAE 1020 C.R.
106	1	1-1/4 dia x .095 wall x 14-1/8 SAE 1015 tube
104	1	1 dia. x .095 wall x 12-1/8 SAE 1015 tube
102	1	3-1/8 OD x .375 wall x 1-1/2 SAE 1015 tube

Figure 2-65. Tail Wheel Spindle Cap Wrench (K-20901)

V2-13

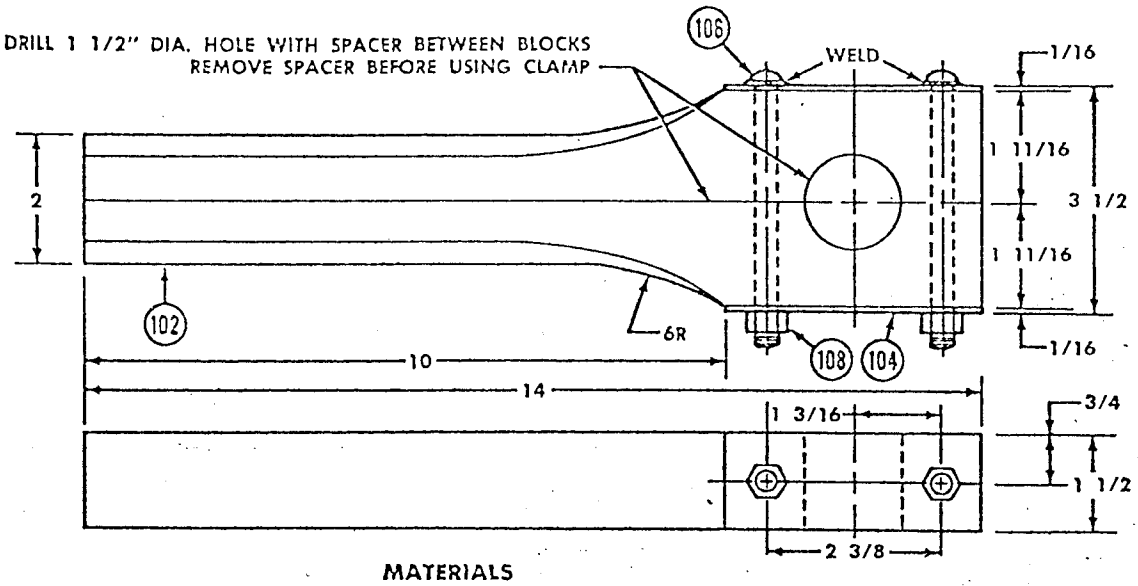

MATERIALS

Item No.	Quantity	Description
108	2	5/16-18 Standard Hex Nut
106	2	7/16-18 x 4-1/2 Rd Hd Machine Bolt.
104	2	1/8 x 1-1/2 x 4 SAE 1020 H.R.
102	2	1-1/2 x 3-3/8 x 14 Hardwood.

V2-14

Figure 2-66. Hydraulic Cylinder Piston Rod Clamp (Substitute for K-21713 and K-21714)

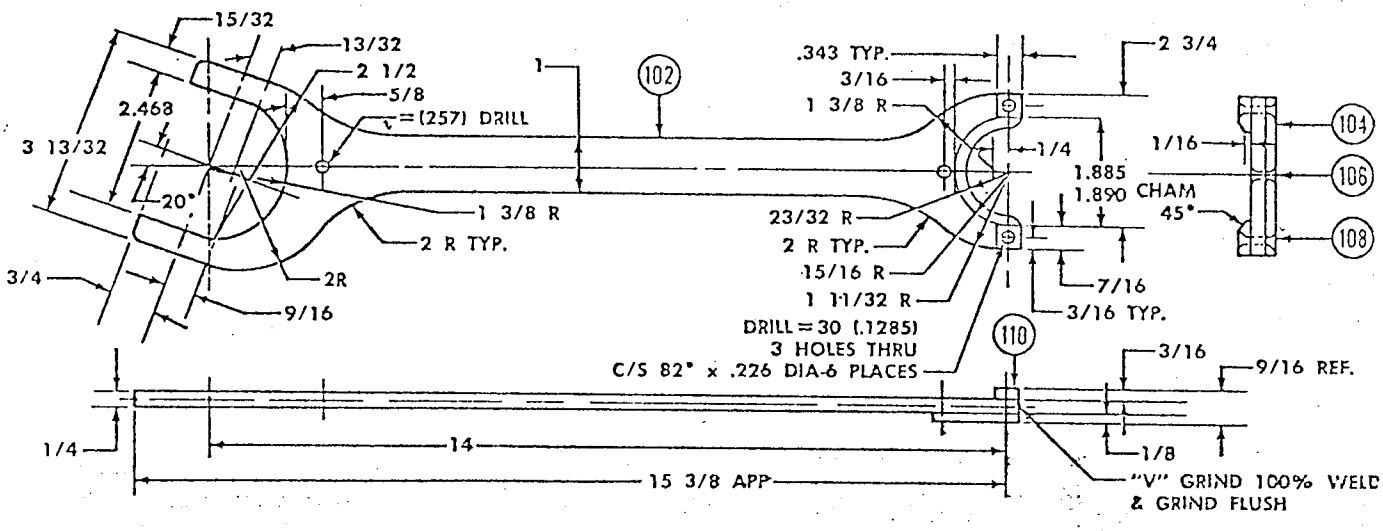

MANUFACTURING NOTES

1. Heat treat 102 and 110, oil quench
   a. Case depth .020
   b. Rockwell 15N 80-82.5
2. Cadmium plate
3. Break all sharp edges except lugs

MATERIALS

Item No.	Quantity	Description
110	2	3/16 x 3/8 x 5/8 SAE 1020 C.R.
108	2	1/8 x 5/8 C/S head steel rivet
106	1	1/8 x 1/2 C/S head steel rivet
104	1	1/8 x 1-5/8 x 2-7/8 fiber
102	1	1/4 x 3-3/4 x 15-1/2 SAE 1020 C.R.

V2-16

Figure 2-67. Landing Gear Retracting Cylinder and Wing Flap Operating Cylinder Packing Wrench (K-20001)

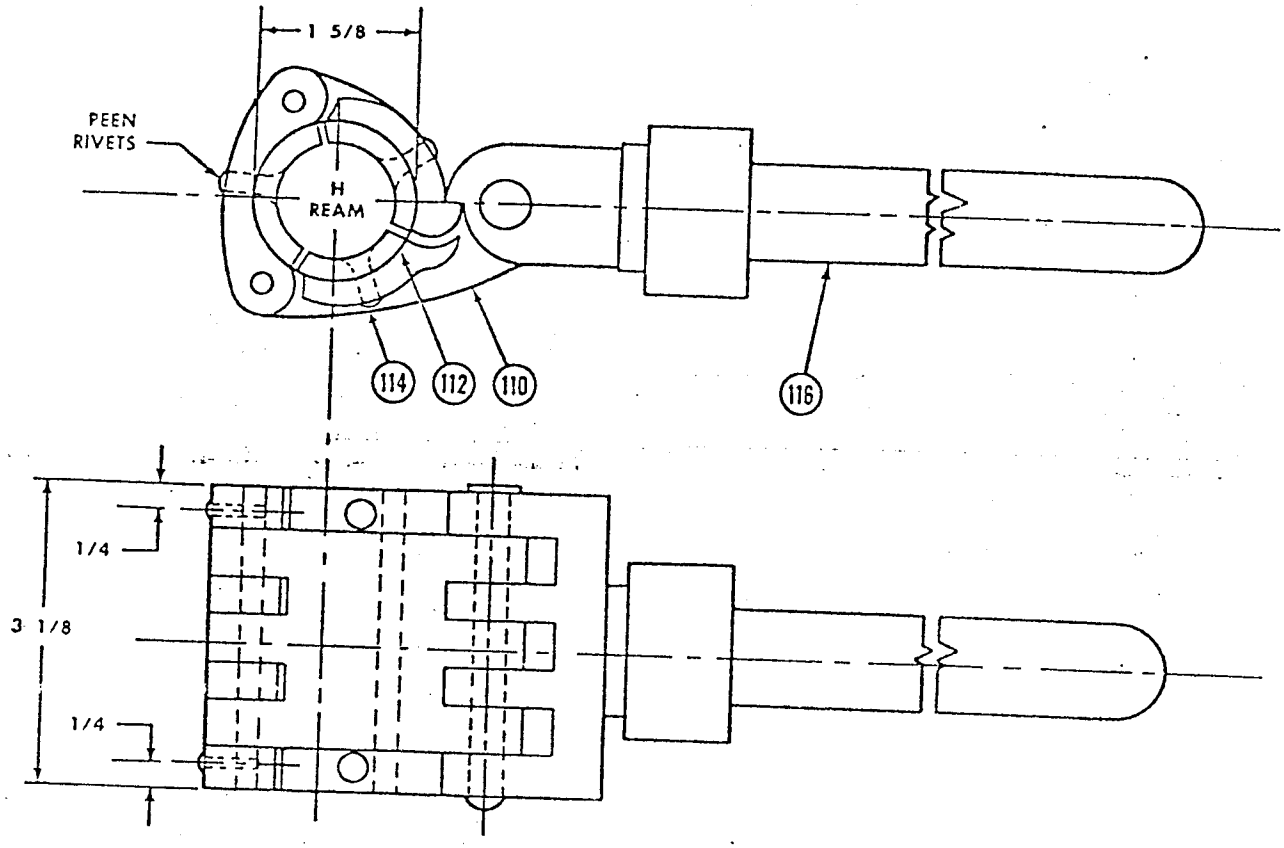

MANUFACTURING NOTES

TOOL NO.	H. REAM	REMARKS
K 21713	1.250 1.245	FOR 1-1/4 INCH PISTON
K 21714	1.375 1.370	FOR 1-3/8 INCH PISTON

MATERIALS

Item No.	Quantity	Description
116	1	Walworth Parmalee No. 2 Friction Wrench
114	6	1/8 dia x 1/2 flathead steel rivets
112	1	1-5/8 dia x 3-1/8 brass rod
110	1	1-1/4 pipe — style No. 2 Walworth Parmalee pipe girth

Figure 2-68. Hydraulic Cylinder Piston Rod Friction Wrench (K-21713 and K-21714)

V2-15

d. Disconnect the outer wing electrical wiring at the junction box located in the wheel well (see Section XII).

e. Lower the wing flaps and disconnect the flap control tube at the union outboard of the wing attaching point *(see figure 2-102)*. Measure the distance between the adjusting nuts on the flap control tube ends before removing the nuts; this will facilitate the adjustment of the flaps during assembly.

f. Working through the access door on the outboard side of the wheel well, disconnect the de-icing pipes at the wing joint by removing the clamps from the hose.

g. Remove the screws from the hoisting sling attach points on the top surface of the outer wing panel, and attach the hoisting sling *(see figure 2-100)*.

h. Remove the bolts which attach the outer wing panel to the center wing *(see figure 2-99)*. Remove the bolts from the underside first.

i. After all pipes, cables, and wires have been disconnected, lift the outer wing panel clear of the center wing *(see figure 2-100)*.

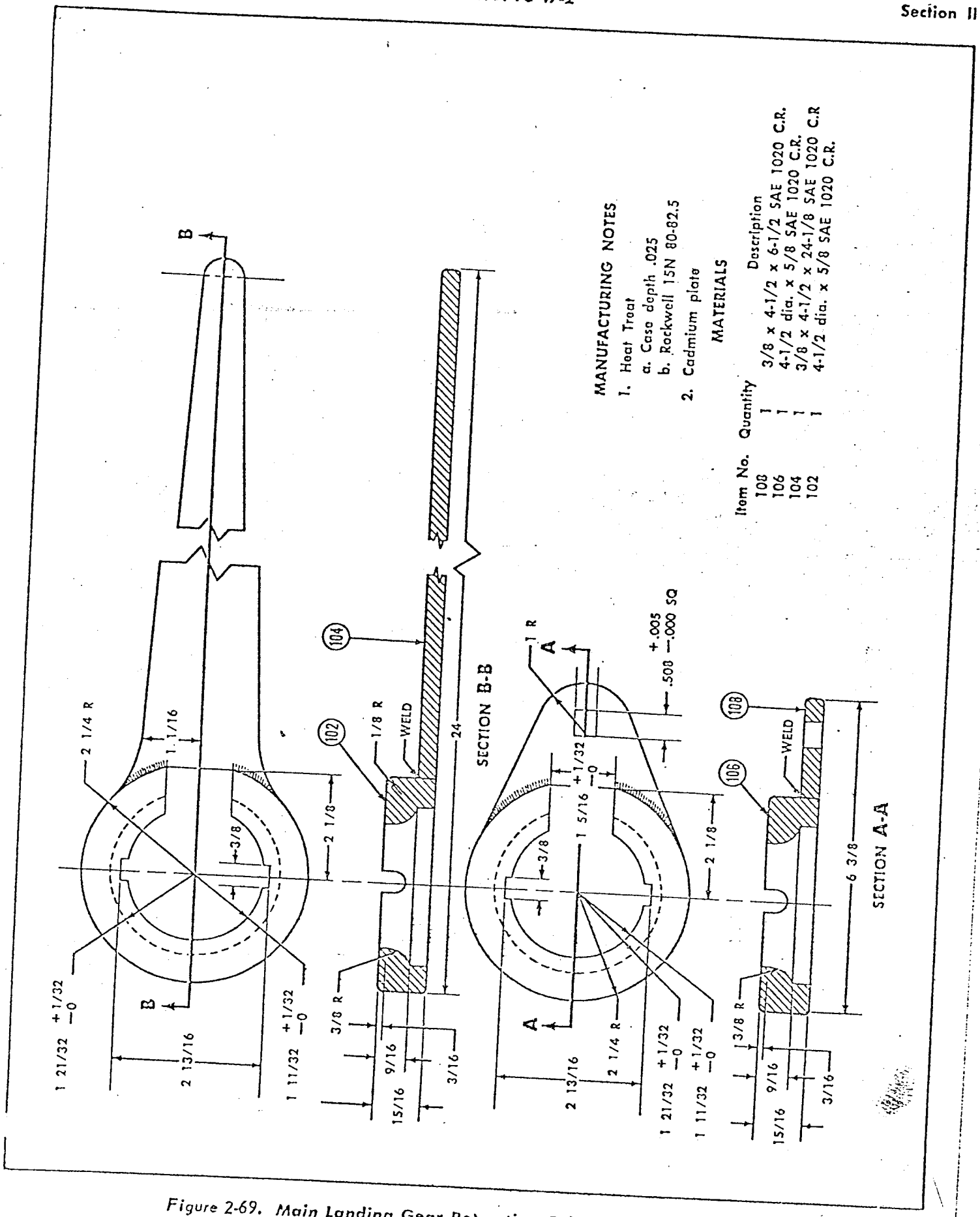

Figure 2-69. Main Landing Gear Retracting Cylinder Wrench (K-21101)

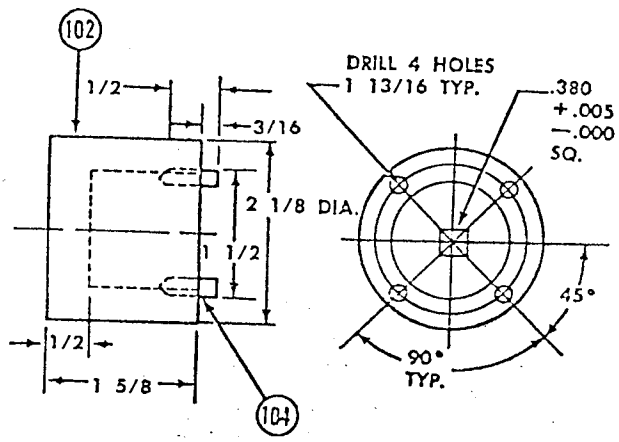

MANUFACTURING NOTES

1. Heat treat 102
   a. Case depth .010 file hard
2. Cadmium plate

MATERIALS

Item No.	Quantity	Description
104	4	.185 dia x 5/8 No. 34 drill rod
102	1	2-1/8 dia x 1-3/4 SAE 1020 C.R.

V2-18

Figure 2-70. Wing Flap Actuating Cylinder Dash-Pot Wrench (K-22101)

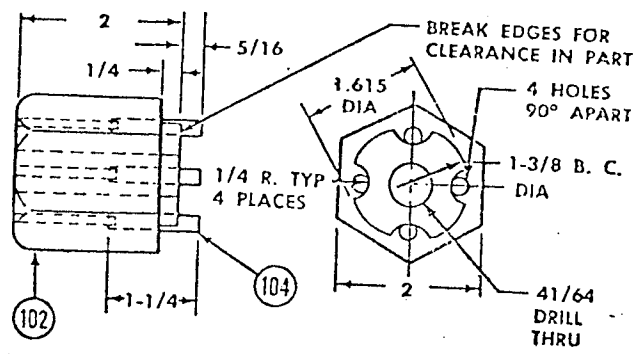

MANUFACTURING NOTES

1. Heat Treat 102°
   a. Case depth .030
   b. Rockwell C45-48
2. Heat Treat 104
   a. Rockwell C45-48
3. Cadmium Plate.

MATERIALS

Item No.	Quantity	Description
104	4	.212 dia x 1-3/8 No. 34 drill rod
102	1	2 hex. x 2-1/8 SAE 1020 C. R.

V2-19

Figure 2-71. Engine Cowl Flap Operating Cylinder End Wrench (K-20401)

2-124. INSTALLATION OF OUTER WING PANEL.

(See figure 2-103.)

a. Attach the outer wing panel sling to the hoisting points on the upper surface of the panel as shown in figure 2-100 and place in position.

b. Install the bolts that attach the outer wing panel to the center section. Torque the bolts to 100 (+0, −5) inch-pounds.

Note

Bolts and nuts must be clean and free from grease, oil, and other forms of lubrication prior to installation.

c. Working through the access door on the outboard side of the nacelle, connect the de-icing pipes at the wing joint by installing the hose clamps.

d. Connect the flap control tube at the union outboard of the wing attach point.

e. Connect the outer wing electrical wiring at the junction box located in the nacelle (see Section XII).

f. Working through the inboard access door, connect the aileron control cables (and the aileron trim tab control cables, if it is the right outer wing).

g. Attach the small cap cover to the underside of the trailing edge of the wing with screws.

h. Position the fairing strip to cover the wing attachment angles and bolts, and secure with screws at the trailing edge fitting. Install the holddown clips.

2-125. WING TIPS.

2-126. The wing tips are all-metal structures and are attached to the outer wing panels with screws.

2-127. REMOVAL OF WING TIP.

a. Remove the aileron as described in Section XI.

b. Remove the fairing securing the de-icing boot to the wing tip.

c. Clear the de-icing boot from the point where the wing tip attaches to the wing.

d. Remove the inspection plate from the underside of the wing tip to disconnect the wing tip electrical wiring in the junction box (see Section XII).

e. Remove the screws attaching the wing tip section to the outer wing. Remove the screws from the lower surface first, and support the tip section while removing the top screws.

f. Two men are required to move the wing tip forward until it is free of the outer wing.

2-128. INSTALLATION OF WING TIP.

(See figure 2-104.)

a. Two men are required to position the predrilled wing tip at the outer wing panel.

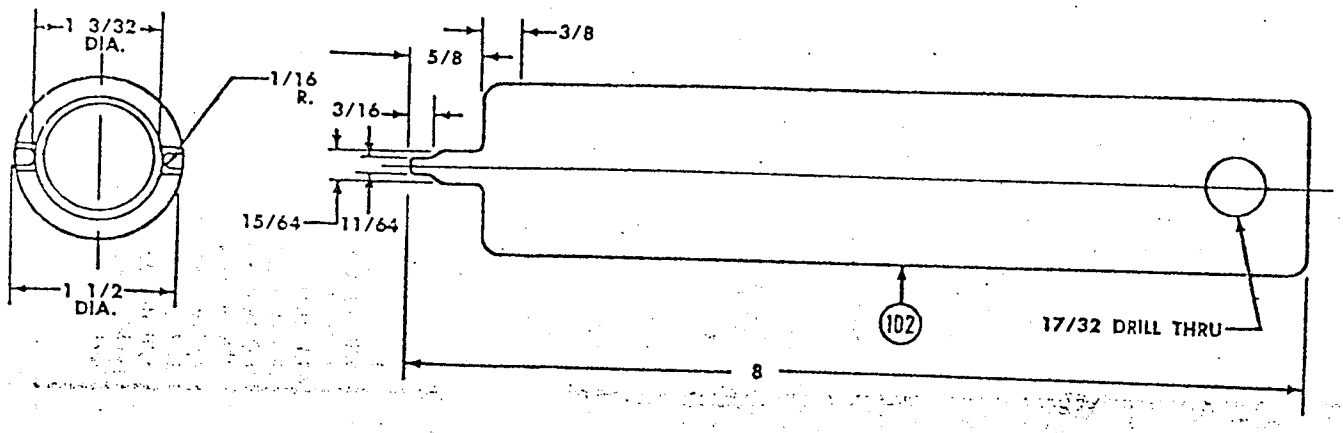

MANUFACTURING NOTES
1. Heat treat
   a. Case depth .010 file hard
2. Cadmium plate

MATERIALS
Make from 1-1/2 OD x 5/16 wall x 8-1/8 SAE 1015 tube

V2-20

Figure 2-72. Hydraulic Pressure Regulator Valve Nut Wrench (K-21201)

b. Keep the wing tip in alignment and install the top screws.

c. Connect the wing tip electrical wiring in the junction box, and install the inspection plate on the underside of the wing tip (see Section XII).

d. Install the fairing and secure the de-icing boot to the wing tip.

e. Install the aileron as described in Section XI.

2-129. CENTER WING.

(See figures 2-99 and 2-100.)

2-130. The center wing is an aluminum alloy structure containing three main spars and an auxiliary spar. The trailing edge section is removable, being attached to the aft spar with bolts and elastic stop nuts. The nacelles, which are constructed as separate units, are bolted to the center wing. Incorporated in each nacelle structure on the lower hat sections are two rubber fittings against which the landing gear axle rests when retracted. These provide a support for landing and will protect the nacelle structure in case an emergency landing is made with the gear in the retracted position.

2-131. REMOVAL OF CENTER WING.

a. Remove the outer wing panels, as described in paragraph 2-123.

b. Remove the engines, as described in Section IV.

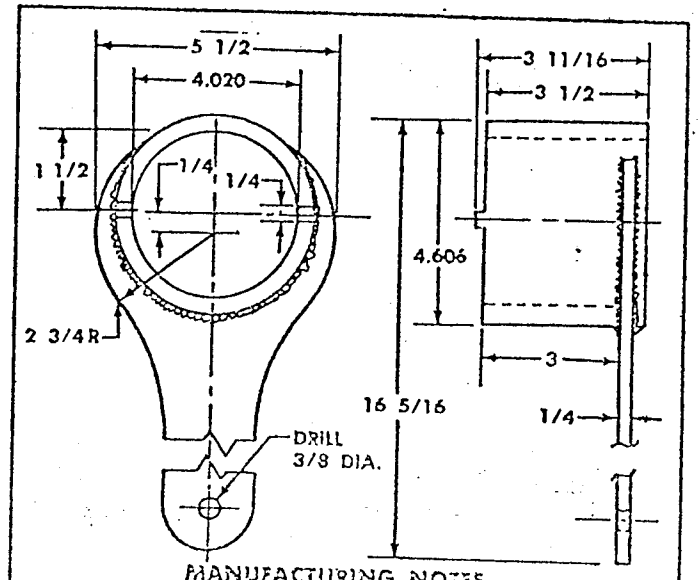

MANUFACTURING NOTES
1. Heat Treat
   a. Case Depth .015
   b. Rockwell 15N 79-81
2. Cadmium Plate

MATERIALS

Item No.	Quantity	Description
Barrel	1	4-5/8 ODX. 312 wall x 3-13/16
Handle	1	1/4 x 5-1/2 x 15-5/8 SAE 1020 C.R.

V2-21

Figure 2-73. Tail Wheel Shock Strut Packing Gland Nut Wrench (K-20501)

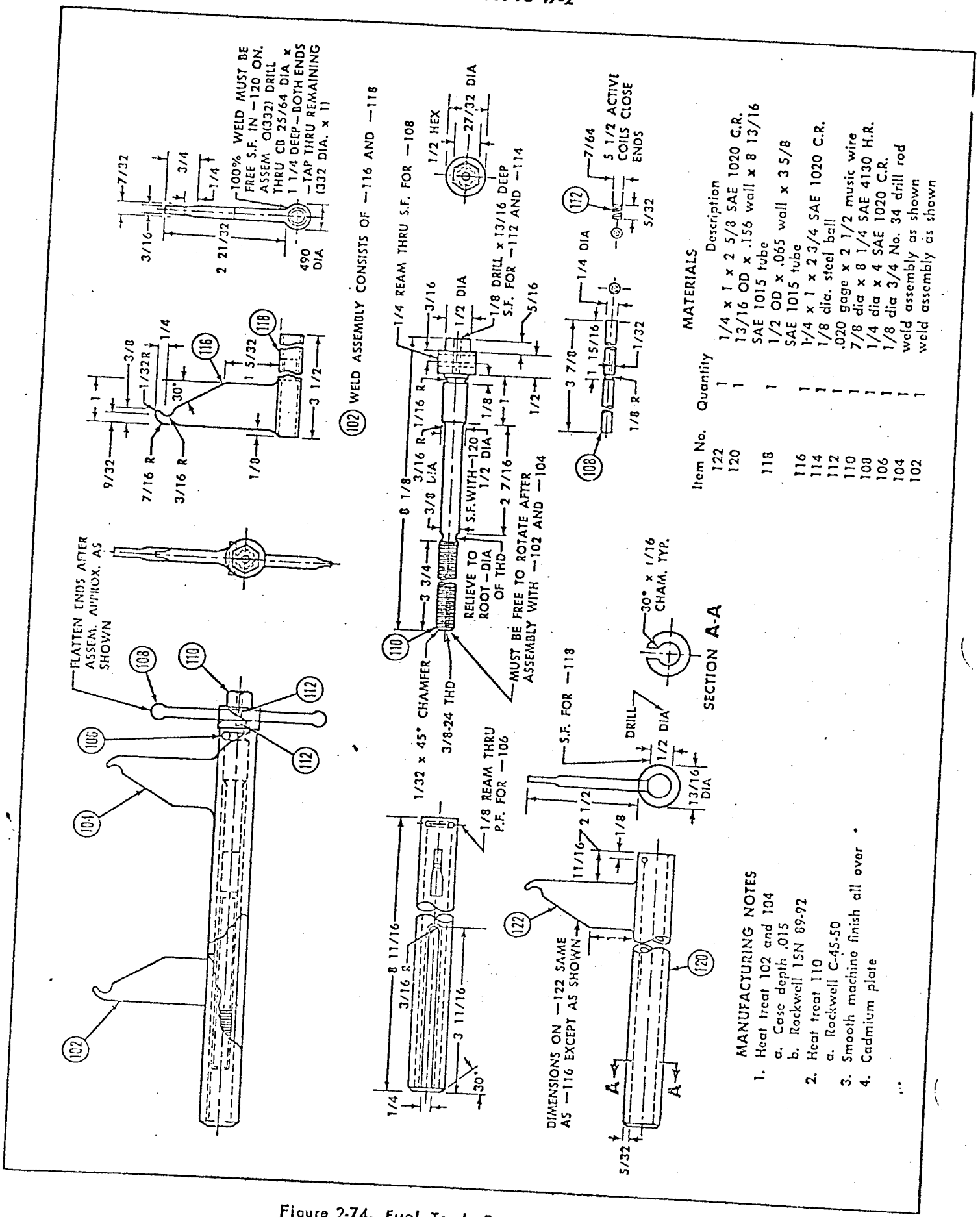

Figure 2-74. Fuel Tank Strap Puller (K-35401)

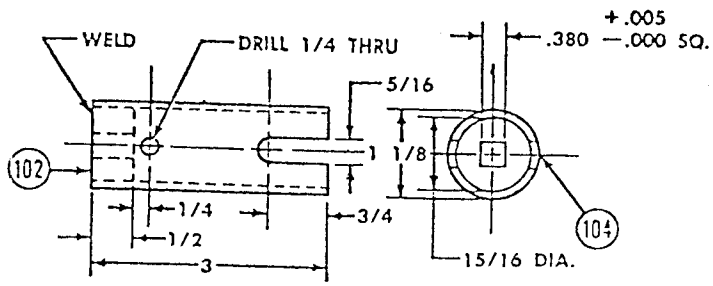

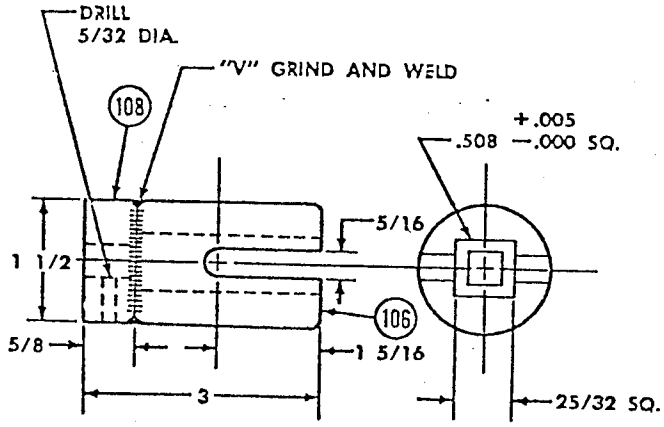

MANUFACTURING NOTES

1. Heat treat
   a. Case depth .020
   b. Rockwell 15N 80-83
2. Cadmium plate

MATERIALS

Item No.	Quantity	Description
108	1	1-1/2 dia x 3/4 SAE 1020 C.R.
106	1	1-1/2 dia x 2-1/2 SAE 1020 C.R.
104	1	15/16 dia x 5/8 SAE 1020 C.R.
102	1	1-1/8 dia x .095 wall x 3-1/8 SAE 1025 tube

Figure 2-75. *Fuel Tank Sump Drain Wrench (K-21601)*

V2-23

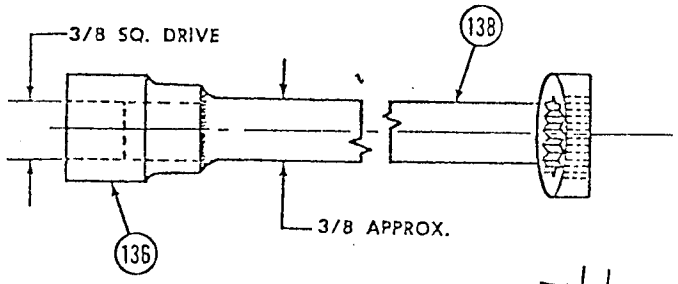

MANUFACTURING NOTES

1. Heat treat
   a. Rockwell C35-40
2. Cadmium plate

MATERIALS

Item No.	Quantity	Description
138	1	9/16-OEX 18 snap-on wrench
136	1	3/8-PF 120 snap-on socket

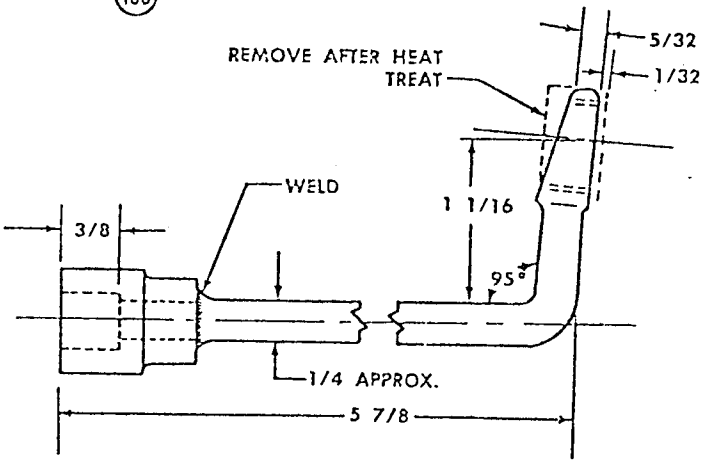

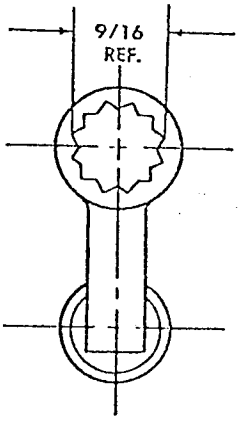

Figure 2-76. *Starter and Generator Crowfoot Wrench (K-32308)*

V2-24

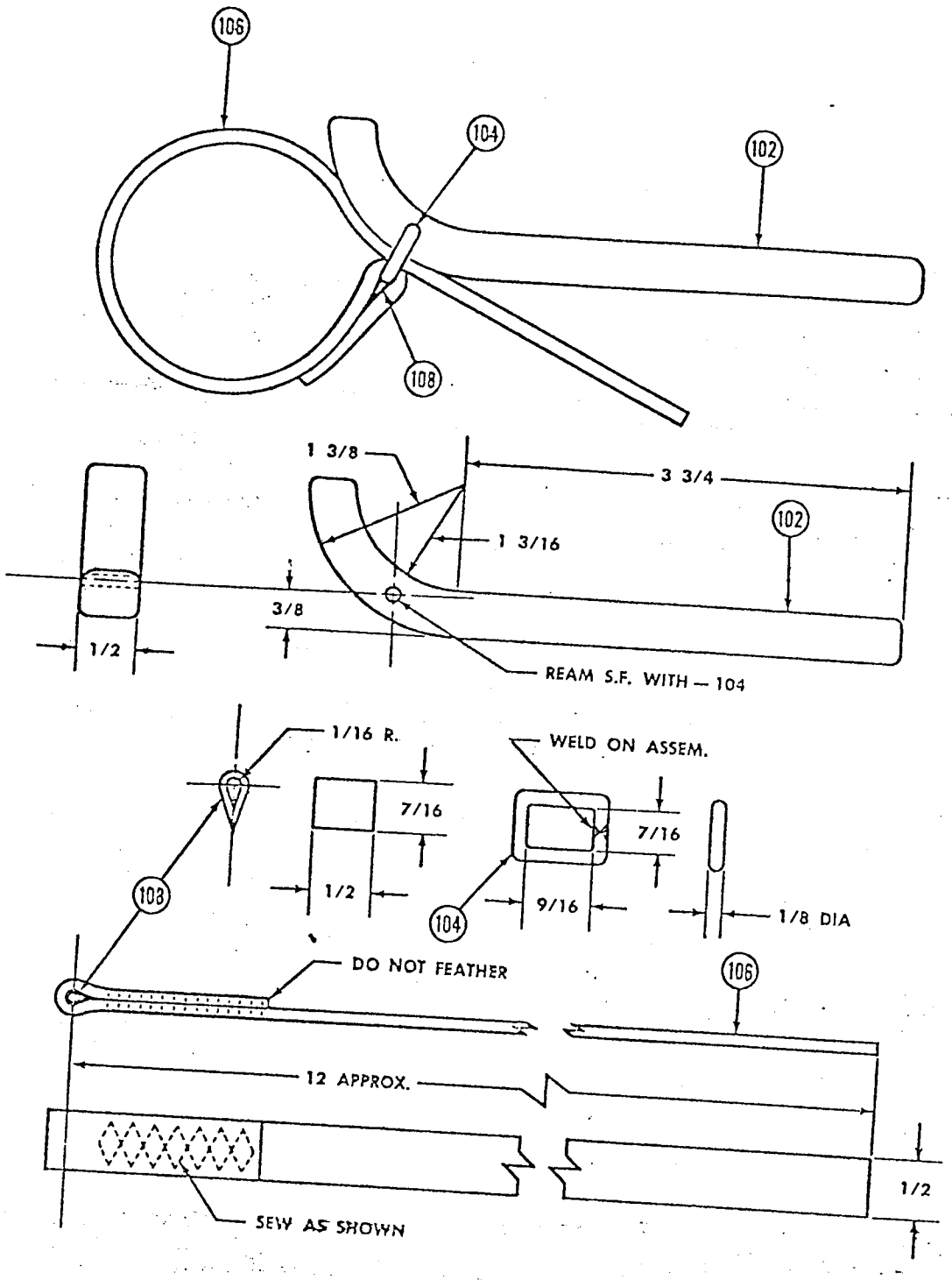

MATERIALS

Item No.	Quantity	Miscellaneous
108	1	.031 x 1/2 x 1-1/8 SAE 1020 H.R. sheet stock
106	1	1/2 x 16 hood lacing
104	1	1/8 dia x 2-1/2 SAE 1020 C.R.
102	1	3/8 x 1/2 x 8 (+2) SAE 1020 H.R.

Figure 2-77. Strap Wrench (K-30503)

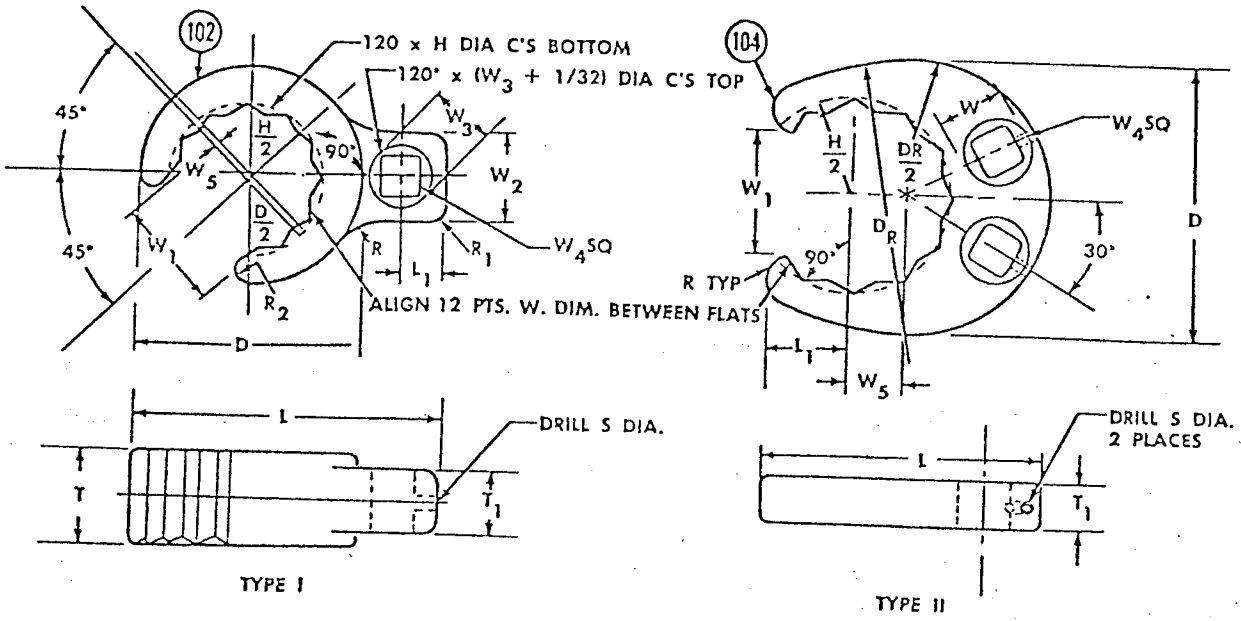

MANUFACTURING NOTES

Tolerance Serv. Tool	Type	D	L	L_1	T (+0 −1/32)	T_1 (+0 −1/32)	W (+.005 −.000)	W_1 (+.005 −.000)	W_2	W_3	W_4 (+.005 −.000)	W_5	H (+1/64 −0)	R	R_1	R_2	S
K21909	I	27/32	1-25/64	9/32	3/8	3/8	.379	.313	17/32	.344	.254	1/32	29/64	7/16	1/16	1/16	3/32
K21910	I	27/32	1-25/64	9/32	3/8	3/8	.440	.363	17/32	.344	.254	1/32	17/32	7/16	1/16	1/16	3/32
K21911	I	31/32	1-33/64	9/32	7/16	7/16	.504	.414	17/32	.344	.254	1/32	19/32	1/2	1/16	5/64	3/32
K21901	I	1- 3/16	1- 7/8	25/64	1/2	1/2	.566	.467	3/4	.527	.380	3/64	43/64	3/4	1/8	1/8	9/64
K21902	I	1- 3/16	1- 7/8	25/64	1/2	1/2	.630	.518	3/3	.527	.380	3/64	3/4	3/4	1/8	3/32	9/64
K21903	I	1- 3/16	1- 7/8	25/64	1/2	1/2	.693	.569	3/4	.527	.380	3/64	53/64	3/4	1/8	3/32	9/64
K21912	I	1- 1/2	2- 3/16	25/64	5/8	7/16	.755	.622	25/32	.527	.380	1/16	29/32	1	1/8	7/64	9/64
K21913	I	1- 1/2	2- 3/16	25/64	5/8	7/16	.818	.672	25/32	.527	.380	1/16	31/32	1	1/8	7/64	9/64
K21904	I	1- 1/2	2- 3/16	25/64	5/8	7/16	.881	.724	25/32	.527	.380	1/16	1- 3/64	1	1/8	7/64	9/64
K21914	I	1- 1/2	2- 3/16	25/64	5/8	7/16	.944	.766	25/32	.527	.380	1/16	1- 1/8	1	1/8	3/32	9/64
K21905	I	1-23/32	2-29/64	31/64	3/4	21/32	1.006	.828	13/16	.527	.380	1/16	1-13/64	7/8	3/16	1/8	9/64
K21915	I	1-23/32	2-29/64	31/64	3/4	21/32	1.068	.878	13/16	.527	.380	1/16	1-17/64	7/8	3/16	1/8	9/64
K21916	I	1-23/32	2-29/64	31/64	3/4	21/32	1.132	.931	13/16	.527	.380	1/16	1-11/32	7/8	3/16	3/32	9/64
K21906	I	2- 1/16	2-13/16	31/64	7/8	21/32	1.195	.982	13/16	.527	.380	5/64	1-27/64	3/4	3/16	1/8	9/64
K21917	I	2- 1/16	2-13/16	31/64	7/8	21/32	1.258	1.034	13/16	.527	.380	5/64	1- 1/2	3/3	3/16	1/8	9/64
K21918	I	2- 1/16	2-13/16	31/64	7/8	21/32	1.321	1.086	13/16	.527	.380	5/64	1- 9/16	3/4	3/16	3/32	9/64
K21919	I	2- 1/16	2-13/16	31/64	7/8	21/32	1.385	1.136	13/16	.527	.380	5/64	1-41/64	3/4	3/16	5/64	9/64
K21907	I	2- 9/16	3- 1/2	33/64	1- 1/16	25/32	1.510	1.240	1- 1/32	.708	.503	3/32	1-25/32	3/4	3/16	5/32	9/64
K21920	I	2- 9/16	3- 1/2	33/64	1- 1/16	25/32	1.571	1.290	1- 1/32	.708	.508	3/32	1-55/64	3/4	3/16	5/32	9/64
K21921	I	2- 9/16	3- 1/2	33/64	1- 1/16	25/32	1.762	1.445	1- 1/32	.708	.508	3/32	2- 3/32	3/4	3/16	1/4	9/64
K21922	I	3- 3/16	4- 5/32	33/64	1- 9/32	25/32	2.014	1.653	1- 1/32	.708	.508	3/32	2-25/64	3/4	3/16	3/16	9/64
K21923	I	3- 3/16	4- 5/32	33/64	1- 9/32	25/32	2.262	1.858	1- 1/32	.708	.508	3/32	2-43/64	3/4	3/16	1/8	9/64
K21908	II	3- 3/16	3-11/16	31/32	17/32	.....	1.948	1.425	.....	.708	.508	5/8	2- 5/16	5/16	.....	.....	9/64
K21924	II	3- 5/8	4- 3/16	1- 1/8	17/32	.....	2.325	1.702	.....	.708	.508	11/16	2- 3/4	5/16	.....	.....	9/64

1. Heat treat 102 and 104
   a. Rockwell C40-43
2. Heat treat 110
   a. Rockwell C40-43
3. Break all sharp edges
4. Cadmium plate

MATERIALS

Item No.	Quantity	Description
110	1	"D" dia x 11-1/4 SAE 1095 H.R.
108	2	"D" dia round steel ball
106	2	.002 dia x ("L" + 1/2) music wire
104	1	"T" x "D" x ("L" + 1/8) SAE 4130 H.R.
102	1	"T" x "D" x ("L" + 1/8) SAE 4130 H.R

Figure 2-78. Crowfoot Square Drive Wrenches (K-21901 through K-21924)

V2-25

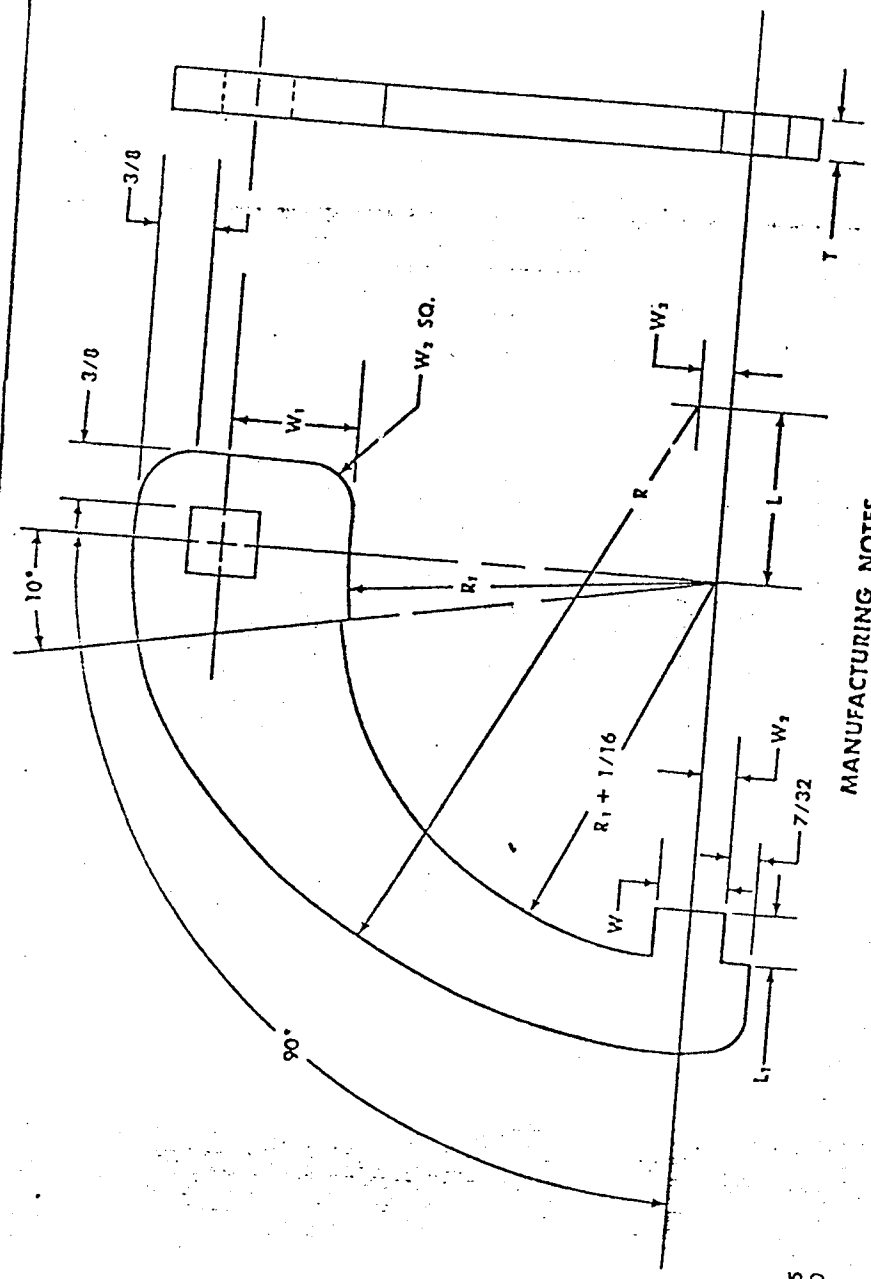

TOLERANCE +.005 −.000

Service Tool No.	Material Size	L	L_1	T	W	W_1	W_2	W_3	R	R_1	Tool Used On
K26409	1/4 × 1-3/8 × 2-3/4	1	1/8	1/4	7/64	5/8	.380	1/4	2-1/8	57/64	Hydraulic hand pump packing collar
K26410	1/4 × 1-5/8 × 3-5/8	1-1/16	11/64	1/4	.477	5/8	.380	1/8	2-5/8	1-11/64	Hydraulic hand pump packing nut
K26413	5/16 × 2-1/8 × 5-1/4	1-5/16	5/32	5/16	5/16	15/16	.508	1/8	4-1/16	2-9/32	Tail wheel shock strut packing nut
K26414	5/16 × 2-1/8 × 5-5/8	1-1/4	5/32	5/16	23/64	15/16	.508	1/8	4-1/4	2-7/16	Main wheel shock strut packing nut

MANUFACTURING NOTES

1. Heat treat
   a. Rockwell C40-45
2. Break all sharp edges
3. Cadmium plate

MATERIALS

Make from SAE 4130 H.R. from size shown in tabulation

Figure 2-79. Spanner Half-Moon) Square Drive Wrenches (K-26409, K-26410, K-26413, K-26414)

Key to Figure 2-80

MATERIALS

Item No.	Quantity	Description
184	1	½-13 x 4 bolt, nut and washer
182	2	No. 2 x 9 sash chain
180	9	½ ID x ⅛ plain steel washer
178	3	5 x 6.7 No. x 56 channel
176	2	½ dia x 2¾ SAE 1020 H.R.
174	3	¾ x 6¼ x 7 SAE 1020 H.R.
172	5	No. 2 x 7 sash chain
170	3	⅜ x 4 x 4⅝ SAE 1020 H.R.
168	1	14 gage (.07) x 48 x 58 SAE 1020 H.R.
166	3	1-75-TC1 Darnell swivel caster
164	12	⅜-16 x ½ hex head cap screw
162	1	Weld assembly as shown
160	1	½-13 x 3 hex head bolt, nut and washer
158	1	Weld assembly as shown
156	1	½ dia x 3 SAE 1020 H.R.
154	1	½ dia x 5 SAE 1020 H.R.
152	3	¾-10 hex nut and lock washer
150	1	Weld assembly as shown
148	1	1½ OD x .250 wall x 19 SAE 1015 tube
146	1	½ x 1½ x 4½ SAE 1020 H.R.
144	1	½ dia x 15⅝ SAE 1020 H.R.

MATERIALS

Item No.	Quantity	Description
142	1	2 OD x .250 wall x 8 SAE 1015 tube
140	1	2 OD x .250 wall x 1 SAE 1015 tube
138	1	1½ OD x .250 wall x 20 SAE 1015 tube
136	2	¼ x 1½ x 1⅞ SAE 1020 H.R.
134	1	1½ dia x 7½ SAE 1020 H.R.
132	3	1½ dia x 3⅝ SAE 1020 H.R.
130	3	1 nom x 19¾ standard black iron pipe
128	3	⅜ dia x 1¾ SAE 1020 H.R.
126	1	Weld assembly as shown
124	6	No. 26 gage safety spring clamp
122	2	Weld assembly as shown
120	2	Weld assembly as shown
118	1	½-13 x 2½ hex bolt, nut and washer
116	1	2½ nom x 42 std seamless black iron pipe
114	1	3 dia x 1 SAE 1020 H.R.
112	12	½ x 2 x 1¾ SAE 1020 H.R.
110	1	3 nom x 32 extra strong seamless black iron pipe
108	1	1½ nom x 3½ extra strong black iron pipe
106	2	½ x 2 x 2½ SAE 1020 H.R.
104	5	½-13 x 4 machine bolt
102	1	1 nom x 42¼ extra strong black iron pipe

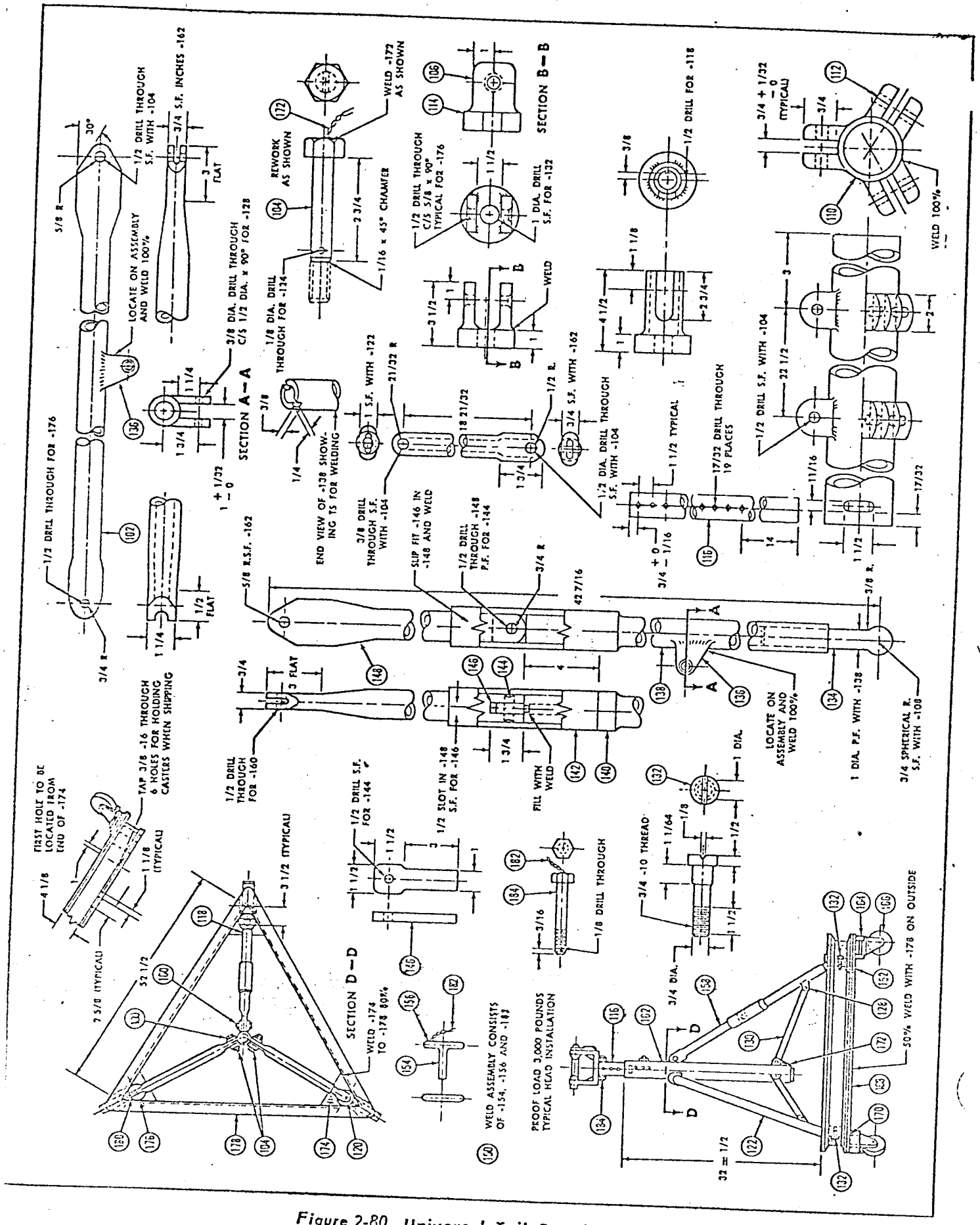

Figure 2-80. Universal Tail Stand (K-12402)

V2-29

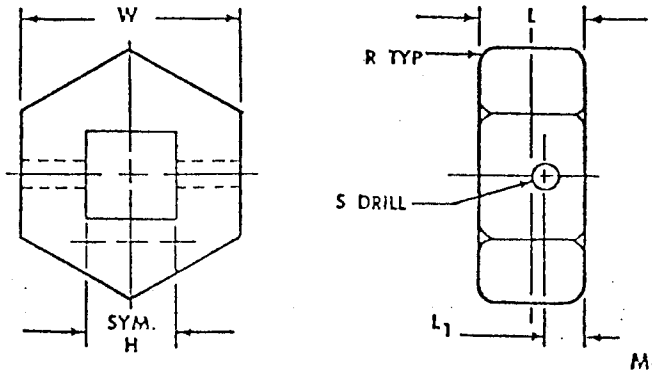

1. Heat Treat
   a. Rockwell C40-45
2. Sandblast
3. Cadmium Plate

MATERIALS
Make from SAE 4130 H. R.

MANUFACTURING NOTES

Tolerance			+ .000 − .005	+ .005 − .000			
Service Tool No.	L	L_1	W Hex.	H	R	S Drill	Material Size
K22201	5/16	13/64	.625	.380	—	1/8	"D" dia x "L" + 1/8
K22202	5/8	15/64	1.312	.508	1/16	5/32	See above
K22203	7/8	15/64	1.125	.508	1/16	5/32	See above
K22204	9/16	13/64	.687	.380	—	1/8	See above
K22205	5/8	15/64	.875	.508	1/32	5/32	See above
K22206	1/2	13/64	.750	.380	—	1/8	See above
K22207	7/8	15/64	1.000	.508	1/16	5/32	See above
K22208	1-1/16	15/64	1.375	.508	1/16	5/32	See above
K22209	1-1/18	15/64	1.500	.508	1/16	5/32	See above

Figure 2-81. Hollow Cap Screw and Nut Hex Adapters (K-22201 through K-22209)

VZ-2B

c. Hoist the entire fuselage by means of the nacelle hoists and the rear fuselage hoist.

d. Remove the main landing gear, as described in Section X.

e. Remove all fillets and neoprene strips installed between the wing and the fuselage by removing the screws. Remove the lower pan at the junction of the leading edge of the wing and the fuselage.

f. Attach the front fuselage hoist to the fitting at the auxiliary spar.

g. Remove the fuselage floor panels, located over the wing.

h. Remove the bolts attaching the two fuselage floor beams to the wing.

i. Disconnect all pipes at the unions located at the intersection of the fuselage and the wing tunnels.

j. Disconnect all surface control cables at the turnbuckles located below the navigator's compartment floor. Remove the empennage control cables from the wing and the aileron cables from the fuselage.

k. Disconnect the empennage de-icing pipes at the wye, located in the fuselage forward of the center wing and on the top side of the center wing (station 312½).

l. Remove the four clips which support the de-icing pipes wye on the floor beam at station 195½.

m. Detach the wobble or booster pump operating shaft at the pumps and under the navigator's compartment floor. Disconnect the joint in the shaft and remove the pumps by detaching the support panel.

n. Remove the wing flap indicator control wire from the wing by removing the clevis located at the wing flap actuating strut cylinder.

o. Remove the wire from the center wing.

p. Remove the plugs located in the leading edge of the center wing and disconnect the electrical wires at the junction of the center wing and the fuselage. Disconnect the two engine starter wires and the flexible conduit in the junction box located on the forward wing spar, see Section XII.

q. Disconnect the electrical wires leading from the fuselage to the center wing section at the junction box located on the top side of the center wing section between stations 294½ and 312½.

r. Free the parapack supporting rods by removing the bolts from the four brackets.

s. Disconnect the parapack control cable conduits by removing the two clips at station 351½.

t. Remove the screws attaching the wing trailing edge to the fuselage.

u. Remove the bolts attached to the fuselage longitudinal bulb angles in the trailing edge of the wing.

v. Remove all screws attaching the fuselage frames to the upper surface and the leading edge of the wing.

w. Remove the screws from the four intercostal brackets that secure the lower nose and the center wing, and remove the brackets.

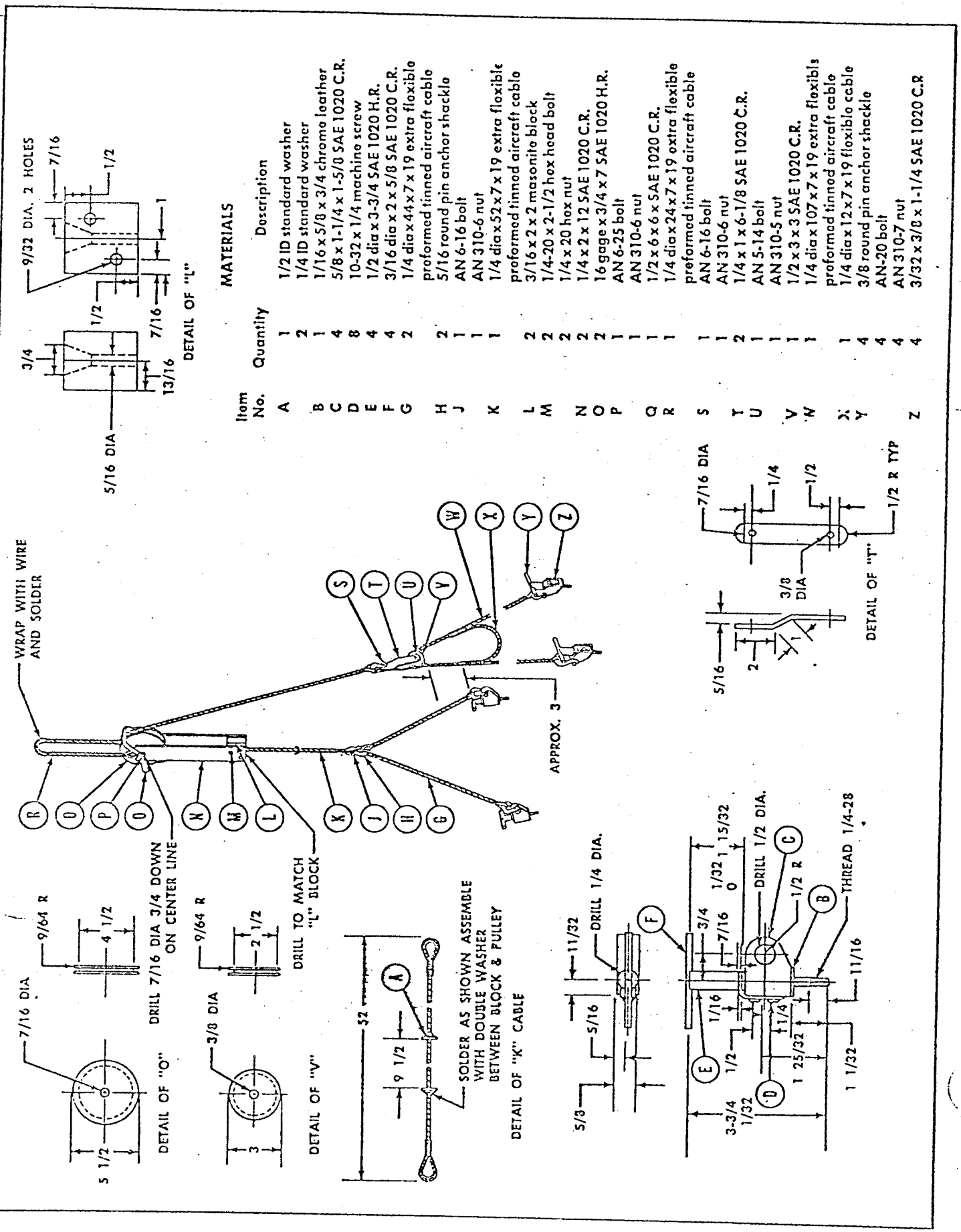

MATERIALS

Item No.	Quantity	Description
A	1	1/2 ID standard washer
B	2	1/4 ID standard washer
C	1	1/16 x 5/8 x 3/4 chrome leather
D	4	5/8 x 1-1/4 x 1-5/8 SAE 1020 C.R.
E	8	10-32 x 1/4 machine screw
F	4	1/2 dia x 3-3/4 SAE 1020 H.R.
G	4	3/16 dia x 2 x 5/8 SAE 1020 C.R.
H	2	1/4 dia x 44 x 7 x 19 extra flexible preformed tinned aircraft cable
J	1	5/16 round pin anchor shackle
K	1	AN 6-16 bolt
L	1	AN 310-6 nut
M	2	1/4 dia x 52 x 7 x 19 extra flexible preformed tinned aircraft cable
N	2	3/16 x 2 x 2 masonite block
O	2	1/4-20 x 2-1/2 hex head bolt
P	1	1/4 x 20 hex nut
Q	1	1/4 x 2 x 12 SAE 1020 C.R.
R	1	16 gage x 3/4 x 7 SAE 1020 H.R.
S	1	AN 6-25 bolt
T	1	AN 310-6 nut
U	2	1/2 x 6 x 6 x SAE 1020 C.R.
V	1	AN 310-6 nut
W	1	1/4 dia x 1 x 6-1/8 SAE 1020 C.R.
X	1	AN 5-14 bolt
Y	4	AN 310-5 nut
Z	4	1/2 x 3 x 3 SAE 1020 C.R.
		1/4 dia x 107 x 7 x 19 extra flexible preformed tinned aircraft cable
		1/4 dia x 12 x 7 x 19 flexible cable
		3/8 round pin anchor shackle
		AN-20 bolt
		AN 310-7 nut
		3/32 x 3/8 x 1-1/4 SAE 1020 C.R

Figure 2-82. Outer Wing Panel Sling (K-10101)

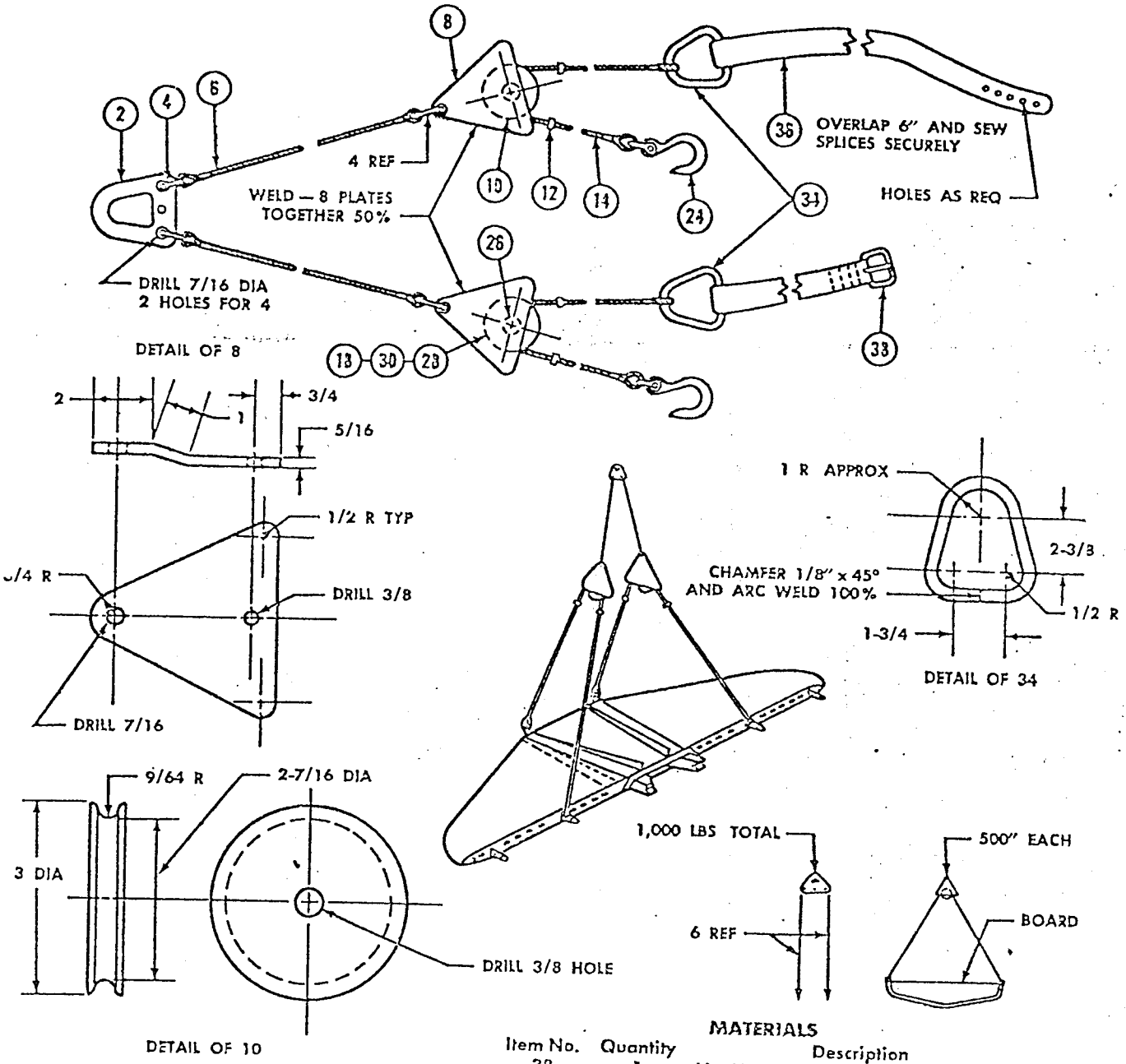

MANUFACTURING NOTES

1. Twelve cable clips to be adjusted by trial
2. Grind all sharp corners
3. Cover 24 with friction tape and shellac
4. Proof load as shown
5. Bend 8 while hot

MATERIALS

Item No.	Quantity	Description
38	1	No. 1B6782 1-1/2 inch harness buckle
36	2	1-1/2 type "B" Rusco webbing 120
34	2	3/8 dia x 8 SAE 1020 C.R.
30	2	AN310-6 hex. nut
28	2	AN6-14 hex. head bolt
26	4	2/16 ID x 1/16 standard washer
24	2	Hook and eye
18	2	AN380-3-3 cotter pin
14	2	3/16 6x19 cable 205 (with thimble)
12	4	3/16 cable clip
10	2	1/2 x 3 x 3 SAE 1020 C.R.
8	4	1/4 x 6 x 6 SAE 1020 C.R.
6	2	1/4 6 x 19 cable 78 (with thimble)
4	6	3/8 anchor round pin shackle (See figure 111.)
2	1	Hoisting link (See figure 110.)

Figure 2-83. Horizontal Stabilizer Sling (K-10801)

V2-31

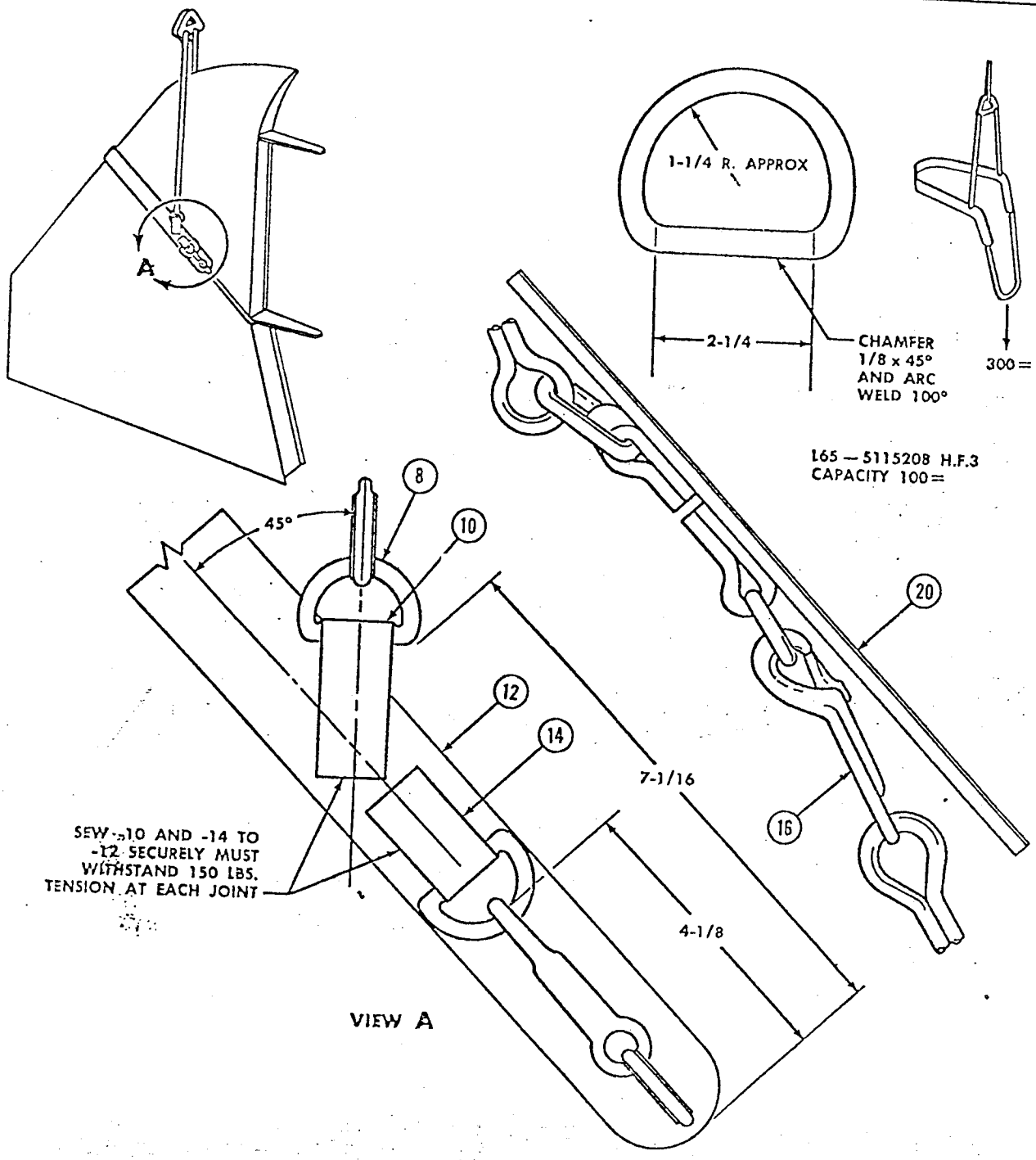

MATERIALS

Item No.	Quantity	Description
20	1	1/16 x 1-3/4 x 60 chrome leather
16	1	1/2 No. 1B6655 Trojan snap
14	2	3/16 x 2 x 3-3/4 leather
12	1	2 x 6 — ply Rusco belting
10	2	3/16 x 2 x 4-1/2 leather
8	4	3/8 diameter x 9 SAE 1020 C. R.

MANUFACTURING NOTES

1. Wrap 8 with friction tape.
2. Sew 20 to back of 12 after sewing 10 and 14 to 12.

Figure 2-84. Vertical Stabilizer Sling (K-10701)

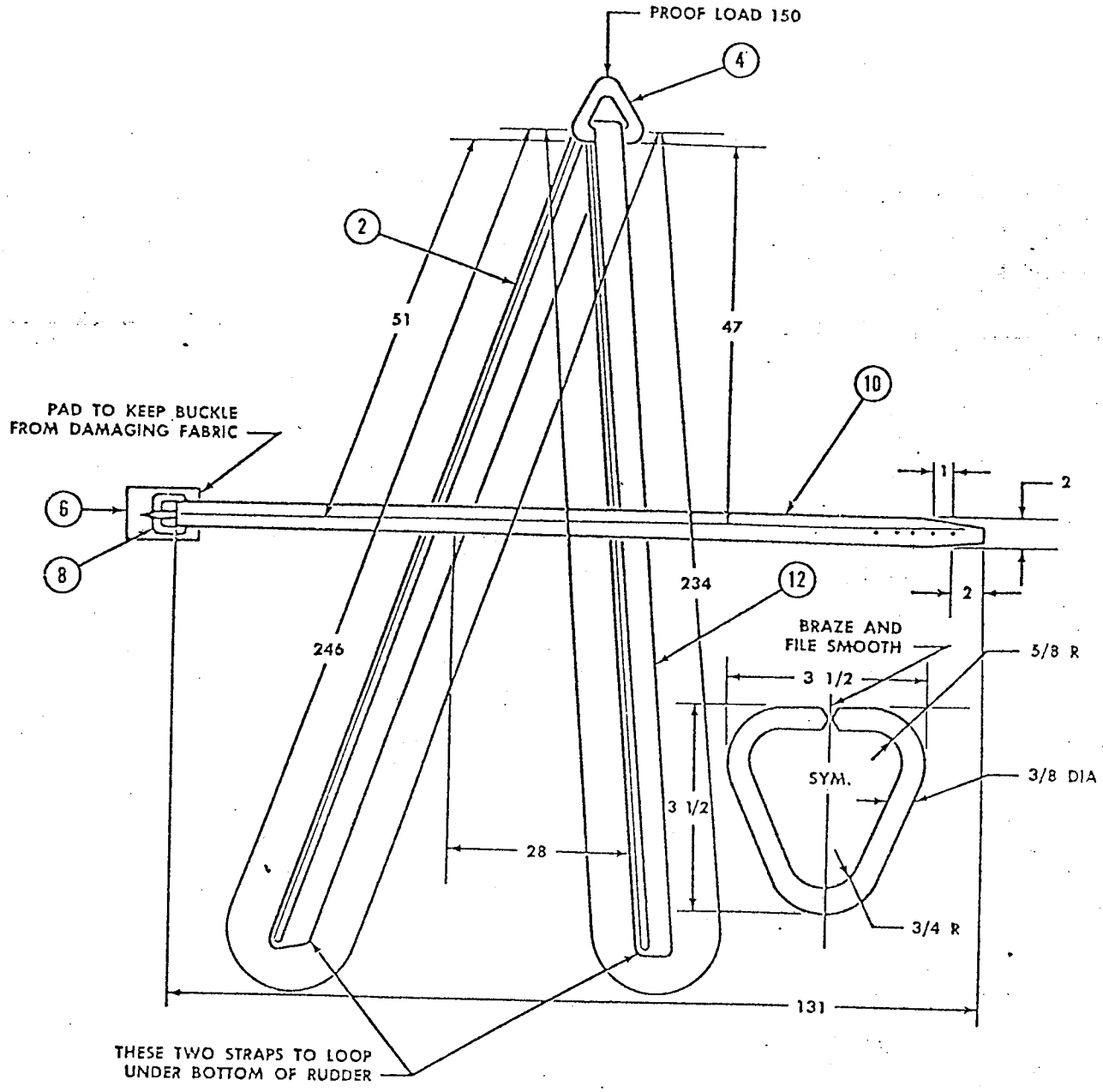

MANUFACTURING NOTES

1. Sew ends of 2 and 12 securely.
2. Sew 10 to 2 and 12 as shown.

MATERIALS

Item No.	Quantity	Description
12	1	2 x 240 Rusco belting type C-6
10	1	2 x 134 Rusco belting type C-6
8	1	1B6784 2-inch harness buckle
6	1	1/4 x 3 x 6 felt and canvas pad
4	1	3/8 dia x 13 SAE 1020 C.R.
2	1	2 x 252 Rusco belting type C-6

Figure 2-85. Rudder Sling (K-10901)

V2-33

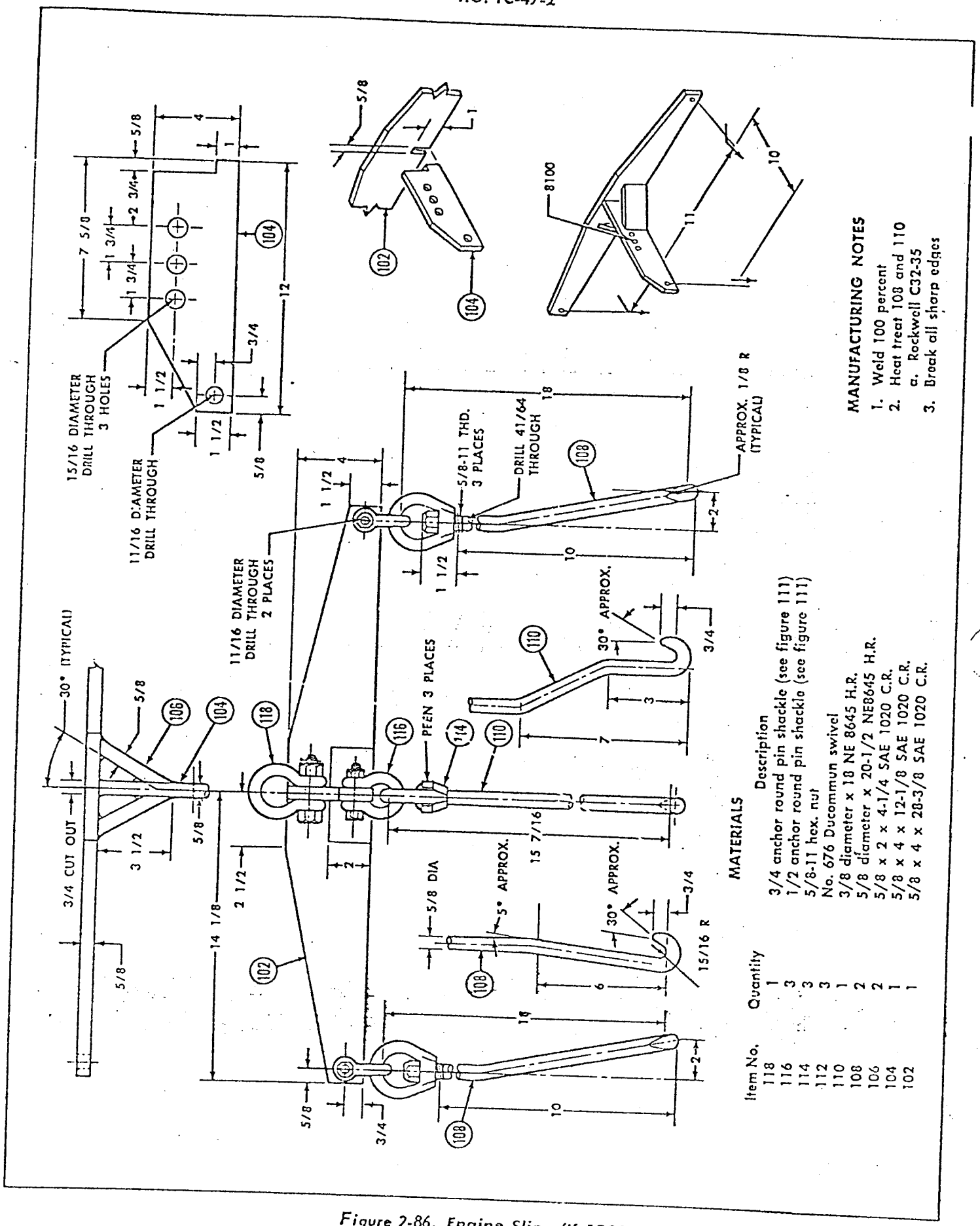

Figure 2-86. Engine Sling (K-13201)

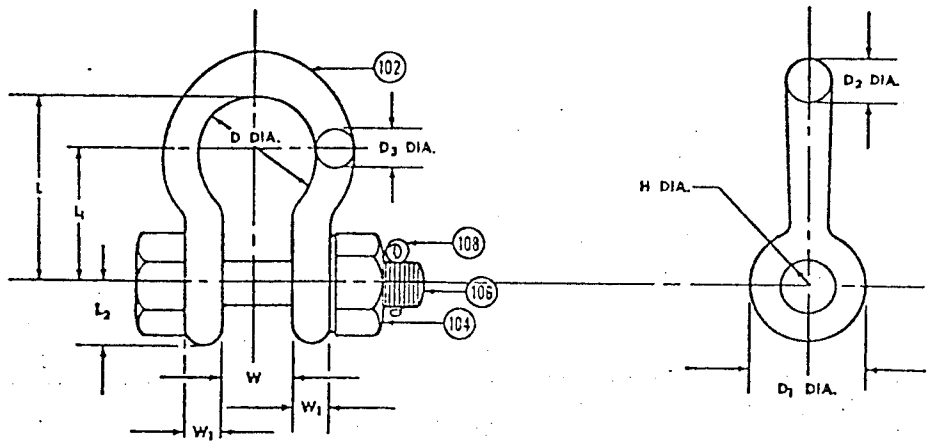

MANUFACTURING NOTES

Size	W	W_1	L	L_1	L_2	D	D_1	D_2	D_3
	±1/32		±1/16	±1/16			±1/16		
3/8	11/16	3/8	1-21/32	1-3/32	35/64	1-1/8	1	27/64	3/8
1/2	13/16	1/2	2-1/4	1-17/32	11/16	1-7/16	1-1/4	9/16	1/2
3/4	1-1/4	3/4	3-7/16	2-3/8	1	2-1/8	1-7/8	27/32	3/4

H ±1/32	Bolt Size	106	104	108
1/2	7/16	7/16-14 x 2	7/16-14 Nut	1/16 x 3/4 Cotter Pin
11/16	5/8	5/8-11 x 3-1/2	5/8-11 Nut	1/16 x 1 Cotter Pin
15/16	7/8	7/8-9 x 4-1/4	7/8-9 Nut	1/16 x 1-1/4 Cotter Pin

MATERIALS

1. 102 is an SAE 1025 drop forging
2. 104, 106, 108 as shown.

Figure 2-87. Clevis Sling

V2-36

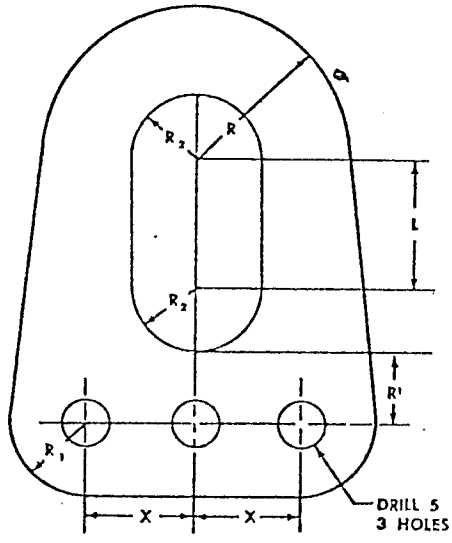

MANUFACTURING NOTES

L	X	R	R_1	R_2	S	GAGE
2	2 11/16	2 1/2	1 3/4	1	1 3/16	1

MATERIALS

Make from SAE 1020 H. R (gage noted).

d. ENGINE SERVICE TOOLS. — The engine special service tools in the following list are included in tool kit assembly PWA-2492 and are provided for servicing and maintaining the R-1830-92 engines in these airplanes between overhauls:

PWA-459	Depressor	— Valve spring and push rod
PWA-672	Gauge	— Valve clearance
PWA-1075	Tool	— Valve adjusting screw and nut
PWA-1265	Wrench	— Oil flange
PWA-1392	Depressor	— Rocker arm
PWA-1395	Drift	— Fibre
PWA-1396	Extension	— 16-inch 3/8-inch square
PWA-1399	Wrench	— Intake pipe nut
PWA-1409	Pipe	— Sump drain
PWA-1424	Wrench	— Push rod cover nut
PWA-1437	Wrench	— Box, 1 3/8-inch hex
PWA-1471	Wrench	— Starter and generator
PWA-1541	Wrench	— Spanner compensating relief valve
PWA-1608	Wrench	— Palnut 3/8-inch
PWA-1633	Wrench	— Cylinder nut, right hand
PWA-1634	Wrench	— Cylinder nut, left hand
PWA-1683	Wrench	— Spark plug elbow
PWA-2210	Wrench	— Oil sump support stud
PWA-2254	Wrench	— 7/8 inch hex. spark plug
PWA-2392	Wrench	— Strait edge, timing

Figure 2-88. Hoisting Sling Link

V2-35

x. Remove the screws attaching the fuselage longerons to the leading edge of the wing.

y. Remove the bolts attaching the lower fuselage area to the center wing attach angles.

z. Remove the fuel vent pipe support clips on the left and right sides of the fuselage above the wing.

aa. Remove the screws from the aft end of the heater mixing chambers located in the fuselage on the left and right sides forward of the leading edge of the center wing. Remove the screws from the floor beam deflection angle that attaches the floor beam to the front wing spar.

ab. Remove the clips that support the heating unit control pipes, from the top side of the center wing at station 202½.

ac. Remove the bolts from the fittings that attach the wing spars to the fuselage.

ad. Lift the fuselage from the center wing section.

2-132. MAINTENANCE AND REPAIR OF CENTER WING.

a. For instructions on the repair of the wing structure, refer to the applicable technical order.

b. Replace all worn or broken bushings.

2-133. INSTALLATION OF CENTER WING.

(See figure 2-105.)

a. Lower the fuselage to the center wing section.

b. Install the bolts in the fittings that attach the wing spars to the fuselage. Torque the bolts to 175 +100 −0 inch-pounds.

c. Install the clips that support the heating unit control pipes to the top side of the center wing at station 202½.

d. Install the screws in the floor beam deflection angle attaching the floor beam to the front wing spar.

e. Install the screws in the aft end of the heater mixing chambers located in the fuselage on the left and right sides forward of the leading edge of the center wing.

f. Install the fuel vent pipe support clips on the left and right sides of the fuselage above the wing.

g. Install the bolts attaching the lower fuselage area to the center wing attach angles.

h. Install the screws, attaching the fuselage longerons to the leading edge of the wing.

i. Install the screws in the four intercostal brackets securing the lower nose and the center wing.

j. Install all screws attaching the fuselage frames to the upper surface and the leading edge of the wing.

k. Install the bolts that attach the fuselage longitudinal bulb angles in the trailing edge of the wing.

l. Install the screws that attach the wing trailing edge to the fuselage.

m. Install the two clips at station 351½ and connect the parapack control cable conduits.

n. Install the bolts to the four brackets and attach the parapack supporting rods.

o. Connect the electrical wires leading from the fuselage to the center wing section at the junction box, located on the top side of the center wing section between stations 294 and 312 (see Section XII).

p. Connect the two engine starter wires and the flexible conduit in the junction box located on the forward wing spar. Insert the plugs located in the leading edge of the center wing (see Section XII).

q. Install the wing flap indicator control wire in the wing by attaching the clevis bolt located at the wing flap actuating strut cylinder.

r. Connect the electrical connectors to the fuel booster pumps located at the center wing section nose and left of the fuselage centerline.

s. Install the four clips supporting the de-icing pipes wye on the floor beam at station 195.

t. Connect the empennage de-icing pipes at the wye, located in the fuselage forward of the center wing and on the top of the wing at station 312.

u. Connect all surface control cables at the turnbuckles located below the navigator's compartment floor.

v. Connect all pipes to the unions located at the intersection of the fuselage and the wing tunnels.

w. Install the bolts attaching the two fuselage floor beams to the wing.

x. Install the fuselage floor panels, located over the wing section.

y. Remove the front fuselage hoist from the hoist fitting at the auxiliary spar.

z. Install the lower pan at the junction of the leading edge of the wing and fuselage. Install the fillets and the neoprene strips between the wing and the fuselage with screws.

aa. Install the landing gear, as described in Section X.

ab. Lower the entire airplane to the ground and remove the nacelle and the rear fuselage hoists.

ac. Install the engines, as outlined in Section IV.

ad. Install the fuel tanks, as outlined in Section VI.

ae. Install the outer wing panels, as described in paragraph 2-125.

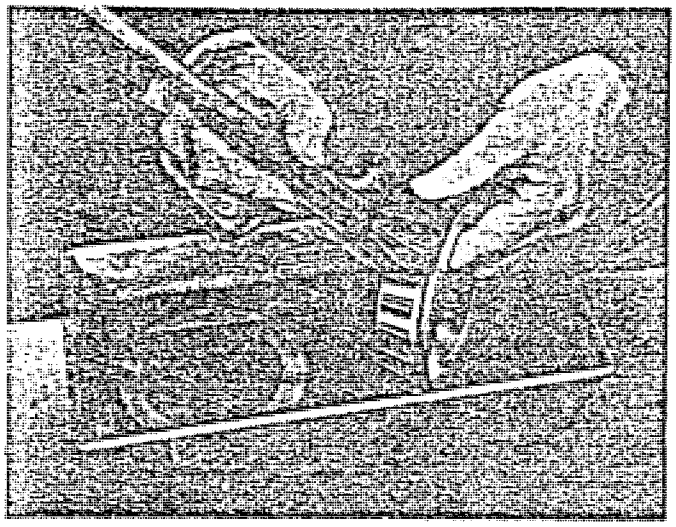

1. Cleaning Bearing with Solvent and Brush

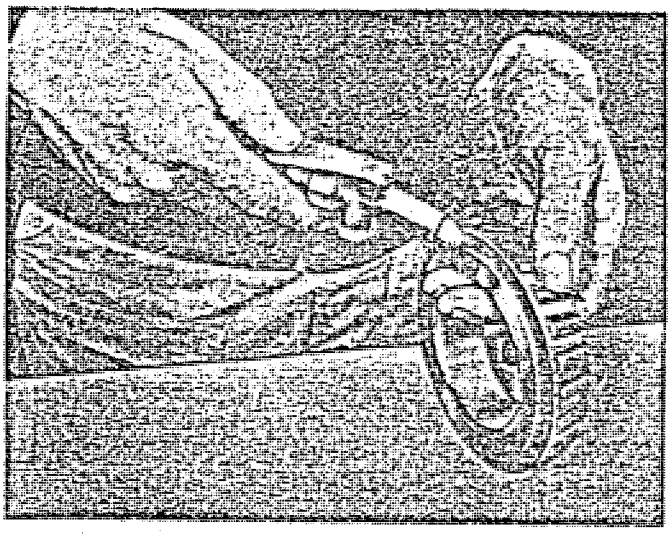

2. Drying Bearing with Air

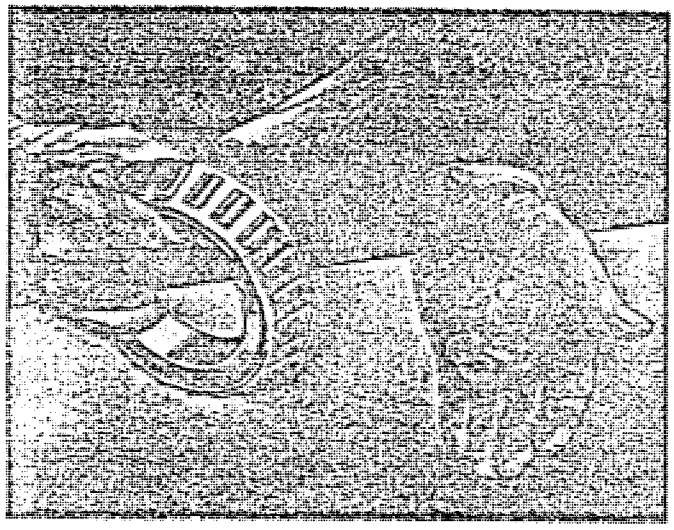

3. Lubricant Before Application

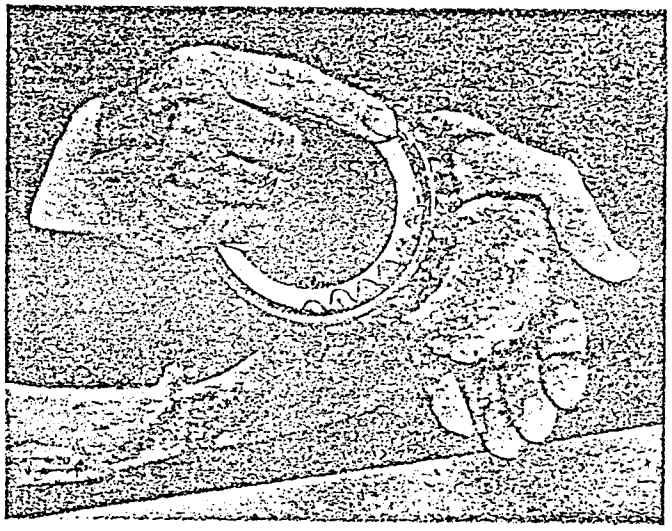

4. Forcing Lubricant through Internal Races

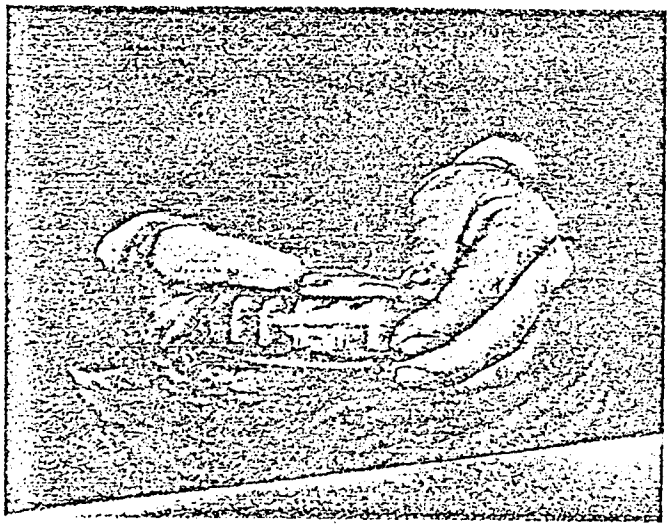

5. Working Lubricant into Rollers

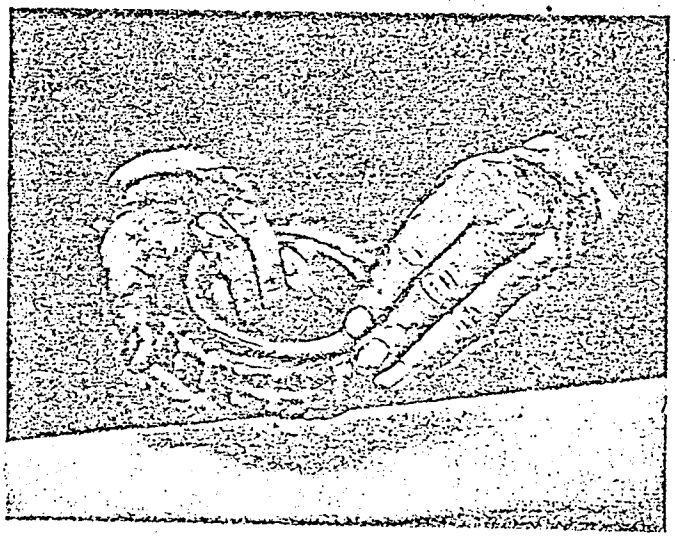

6. Working Lubricant into Roller Races

33.511

Figure 2-97. Lubricating Open-Type Bearing

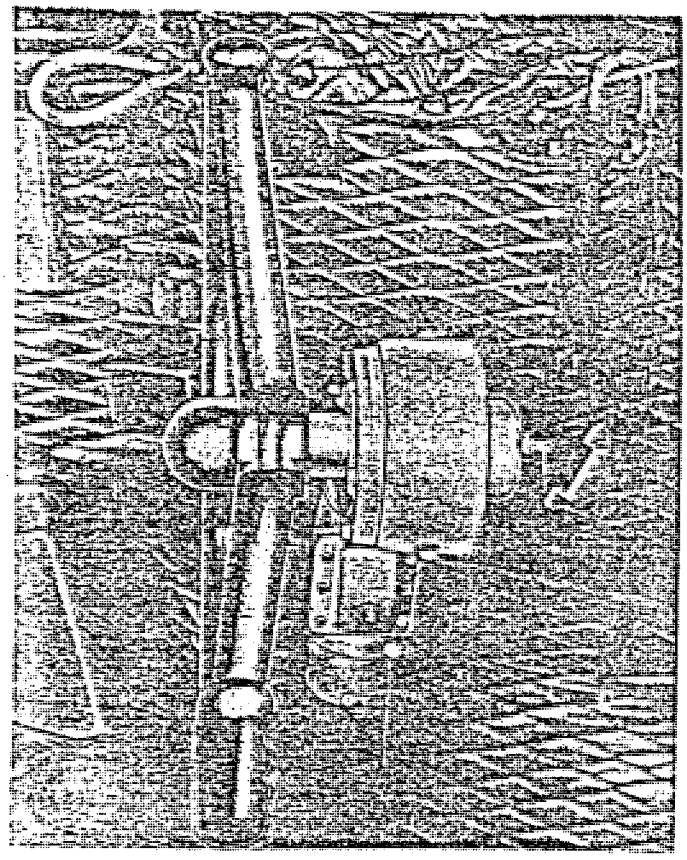

33,512

Figure 2-98. Control Wheel Column Lubrication Fitting

2-134. EMPENNAGE.

2-135. GENERAL DESCRIPTION. *(See figure 2-106.)* The empennage consists of the vertical and horizontal stabilizers, the elevators, and the rudder. For information on the elevators and the rudder, see Section XI.

a. Torque the empennage to fuselage attach bolts to 100 ± 10 inch-pounds.

2-136. REMOVAL AND INSTALLATION OF STABILIZERS. Removal and installation of the stabilizers are accomplished as outlined in the following paragraphs.

2-137. HORIZONTAL STABILIZER.

2-138. The horizontal stabilizer is an aluminum alloy structure consisting of two interchangeable assemblies. The two assemblies are bolted together, but can be removed or installed as one unit. Each section has a removable tip. A de-icing boot is installed on the leading edge of each section. The horizontal stabilizer is attached to the fuselage with bolts through the flange plates which are riveted to the stabilizer. Four hinge brackets are bolted to the stabilizer ribs for attaching the elevator.

2-139. REMOVAL OF HORIZONTAL STABILIZER.

a. A hoist is not required for removing the horizontal stabilizer.

b. Open the access door on the left side of the tail cone to disconnect the wires at the junction box in the tail cone.

c. Remove the tail cone attaching screws from the fuselage and remove the tail cone.

d. Remove the elevators as outlined in Section XI.

e. Detach the rudder stop cable assembly by removing the bolt from the bracket *(see figure 2-107)* attached to the top surface of the horizontal stabilizer in the fuselage aft section.

f. Disconnect the elevator control cables at the elevator horns.

g. Detach the fuselage-to-stabilizer fillets by removing the screws.

h. Detach the de-icing pipe leading to each stabilizer.

i. Remove the bolts attaching the stabilizer to the fuselage.

j. Remove the two channels bolted to the aft end of the fuselage.

k. Four men are required to move the stabilizer aft *(see figure 2-108)* until it is clear of the fuselage.

2-140. DISASSEMBLY OF HORIZONTAL STABILIZER.
(See figure 2-110.)

a. Remove the attaching bolts to separate the two sections of the horizontal stabilizer.

b. Remove the de-icing boot fairing strip and the outer section of the boot to clear the tip.

c. Remove the screws and the tip from the stabilizer.

2-141. ASSEMBLY OF HORIZONTAL STABILIZER.

a. Attach the tip to the horizontal stabilizer with the screws.

b. Install the de-icing boot on the stabilizer.

c. Install the de-icing boot fairing.

d. Install the two sections of the stabilizer with the attaching bolts. Torque the bolts to 40 (±5) inch-pounds.

2-142. INSTALLATION OF HORIZONTAL STABILIZER.
(See figure 2-108.)

a. Four men are required to slide the complete horizontal stabilizer assembly into the opening at the aft end of the fuselage.

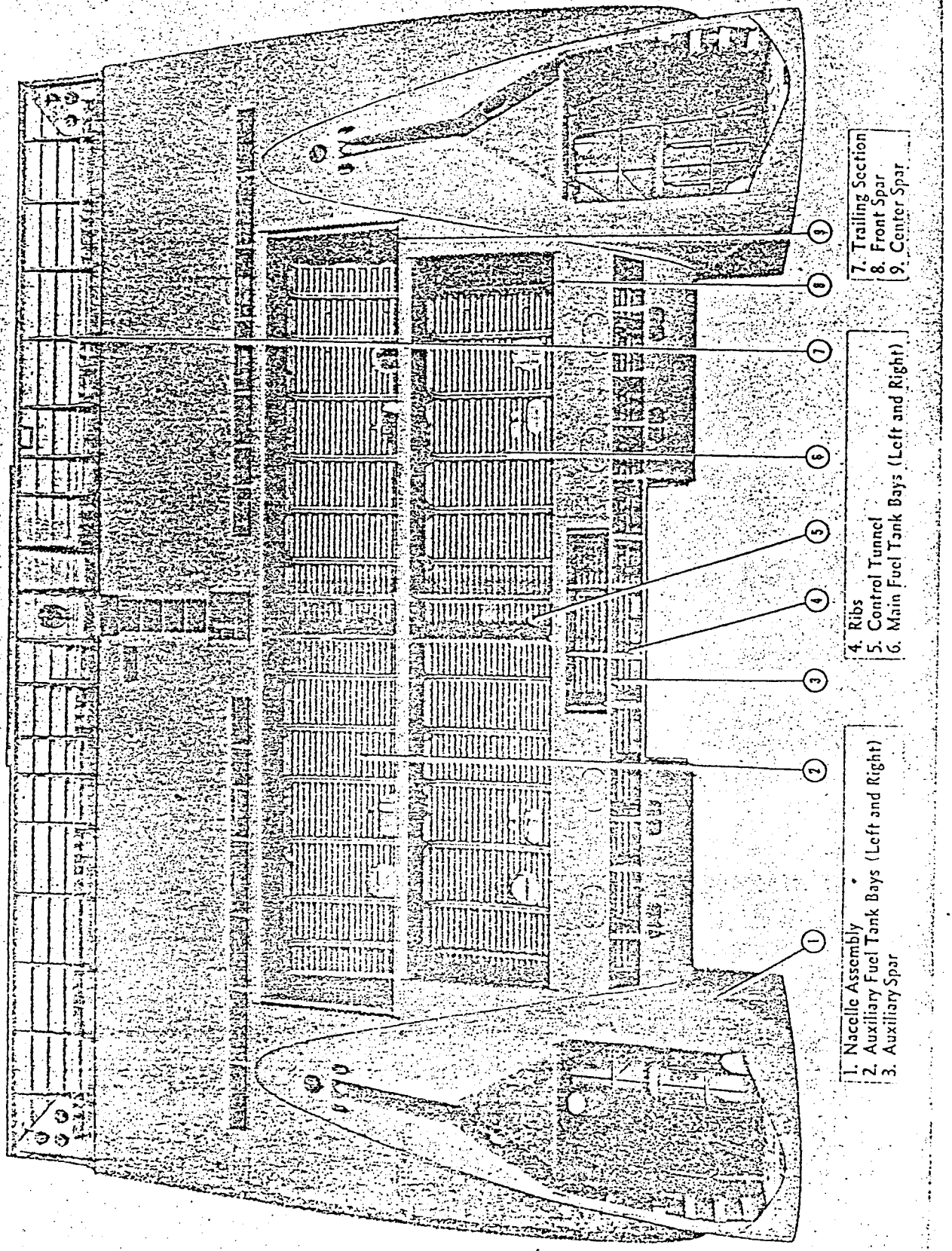

Figure 2-99. Center Wing — Bottom View

33.513

Figure 2-100. Center Wing — Top View

33,514

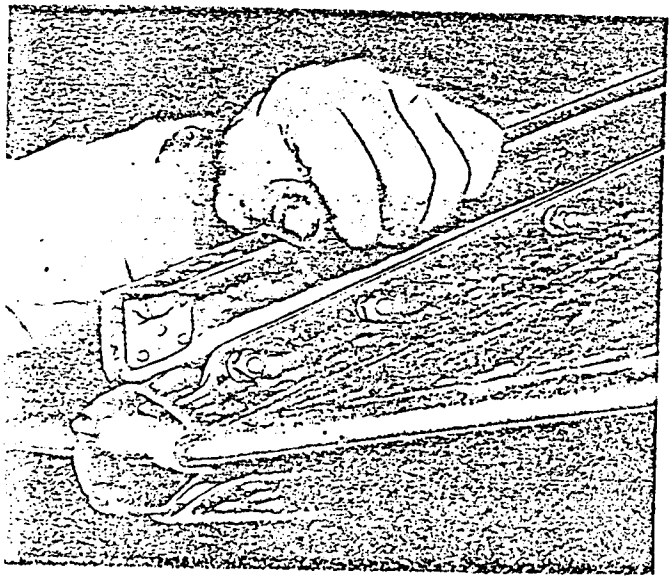

33,515

Figure 2-101. Removal of Outboard Wing Fairing

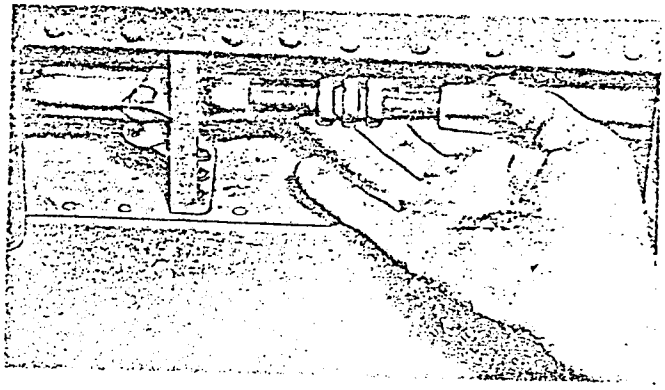

33,516

Figure 2-102. Wing Flap Operating Tube Union

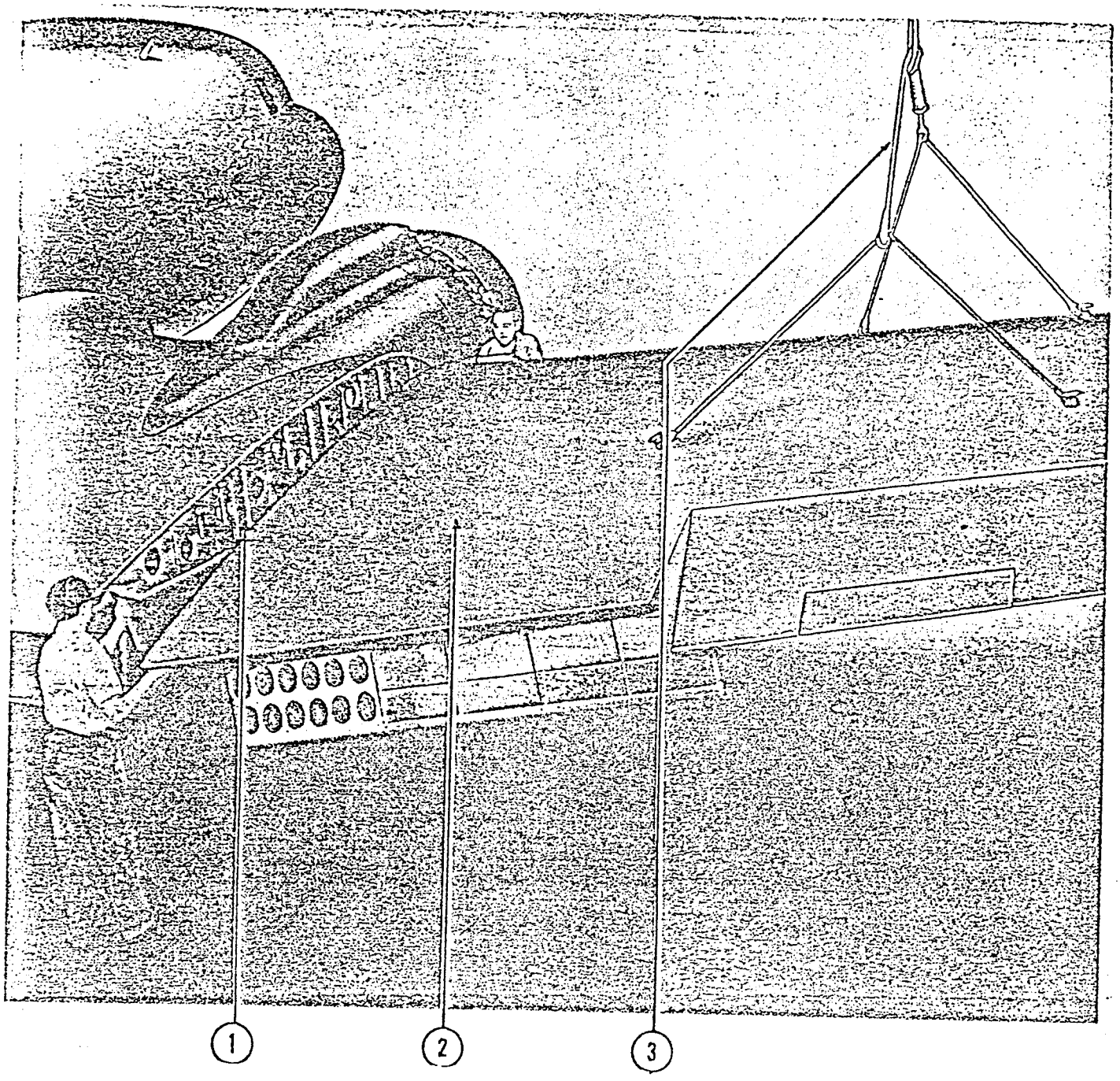

33,517

Figure 2-103. Attachment of Outer Wing

b. Install the two channels on the aft end of the fuselage with bolts.

c. Install the bolts attaching the stabilizer to the fuselage.

d. Install the de-icing pipe leading to each side of the stabilizer.

Key to Figure 2-103

Item	*Nomenclature*
1.	Right Hand Rib Assembly — Wing Station 142 (false rib)
2.	Outer Wing Assembly (right hand)
3.	Outer Wing Sling

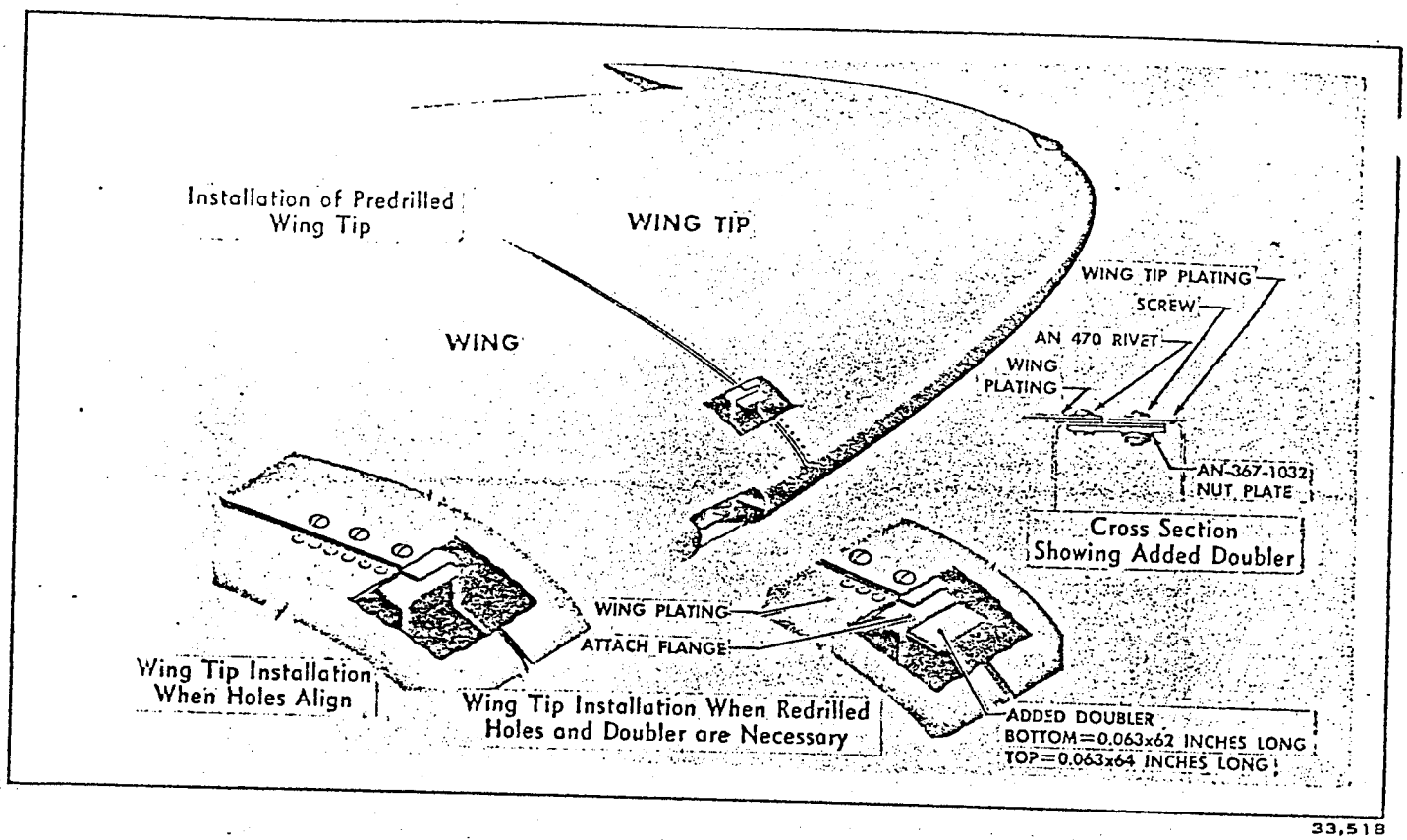

Figure 2-104. Installation of Predrilled Wing Tip

Key to Figure 2-105.

Item	*Nomenclature*
1.	Wing-to-Fuselage Attaching Fittings — Station 202½
2.	Wing-to-Fuselage Attaching Fittings — Station 222½
3.	Fuselage Attaching Angle
4.	Wing-to-Fuselage Attaching Fittings — Station 258½
5.	Wing Fillet
6.	Fuselage to Wing Attaching Brackets
7.	Wing-to-Fuselage Attaching Fittings — Station 294½
8.	Floor Beam Attaching Fittings
9.	Wing-to-Fuselage Skin Attaching Strip
10.	Fuselage-to-Wing Attaching Brackets

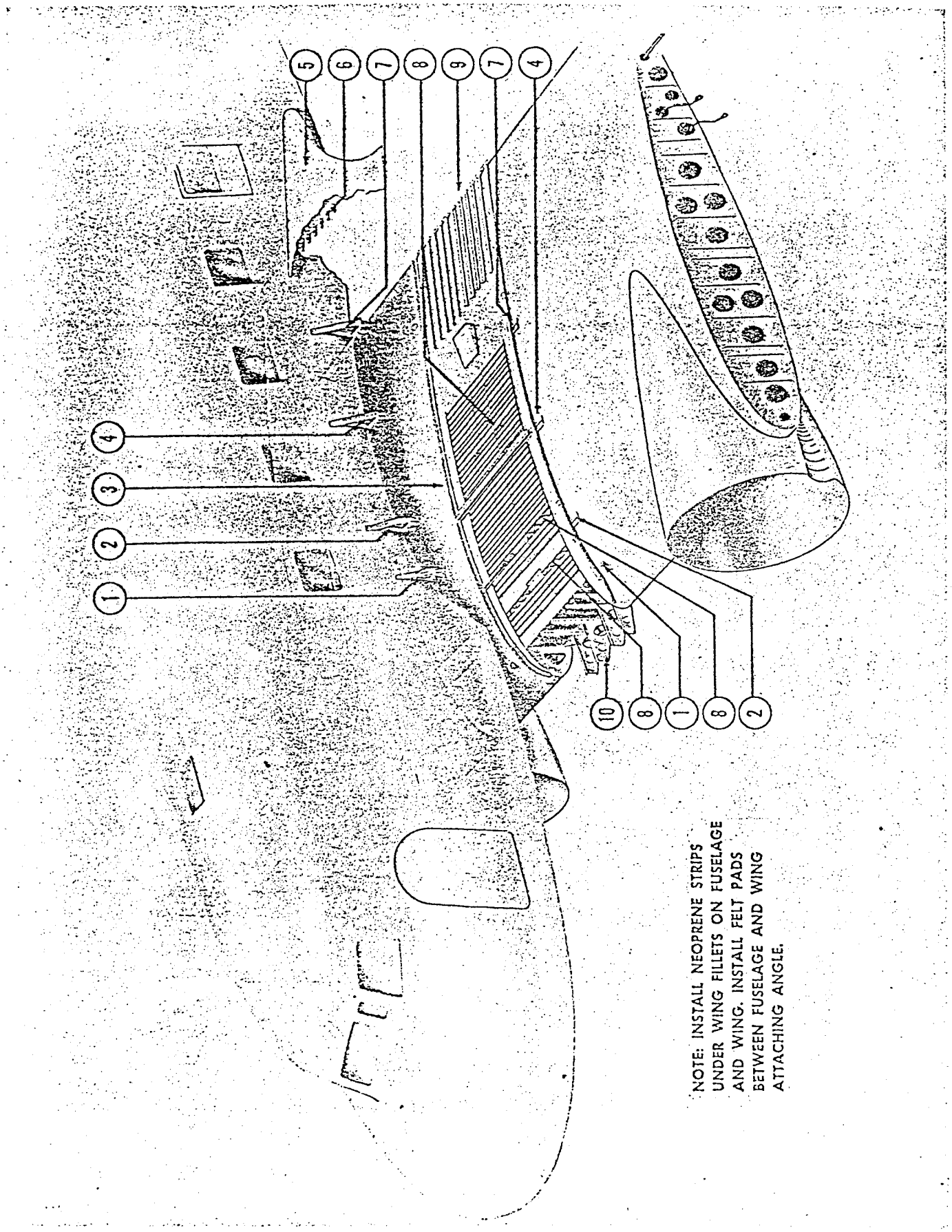

Figure 2-105. Center Wing Installation

33,519

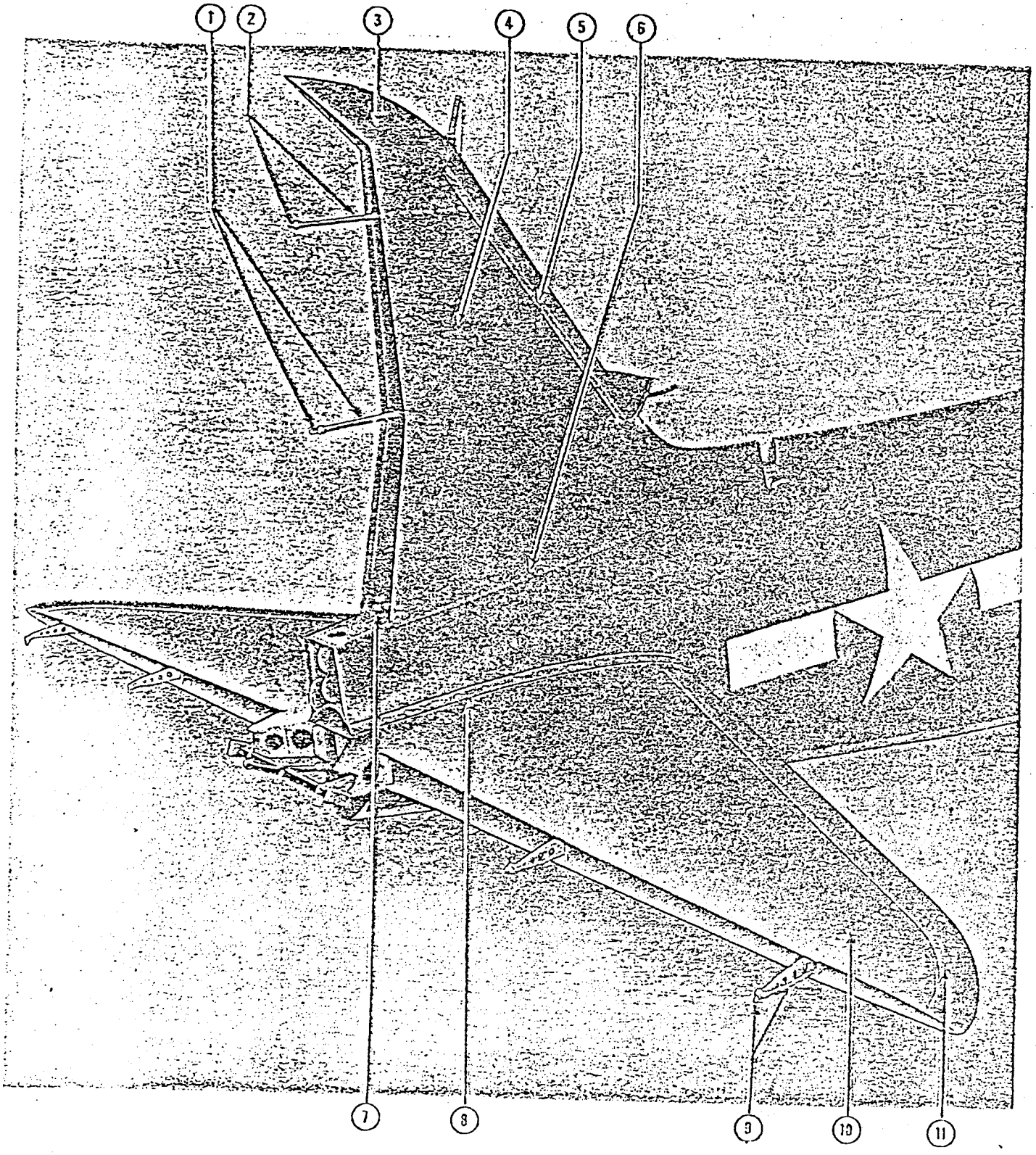

Figure 2-106. Vertical and Horizontal Stabilizers

33,520

e. Attach the stabilizer fillets to the fuselage with screws.

f. Connect the elevator control cables at the elevator horns.

g. Attach the rudder stop cable assembly by installing a bolt through the bracket *(see figure 2-108)* attached to the top surface of the horizontal stabilizer in the fuselage aft section.

h. Install the elevators as outlined in Section XI.

i. Open the access door on the left side of the tail cone to connect the wires at the junction box in the tail cone (see Section XII).

2-143. VERTICAL STABILIZER.

2-144. The vertical stabilizer is an aluminum alloy structure with a removable tip. A de-icing boot is installed on the leading edge. The sides of the stabilizer are attached to the fuselage with screws. The base at the aft end of the stabilizer is bolted to the fuselage. Two hinge fittings are bolted to the structure for attaching the rudder. Two lugs for attaching the radio antennas are provided on the leading edge of the stabilizer tip.

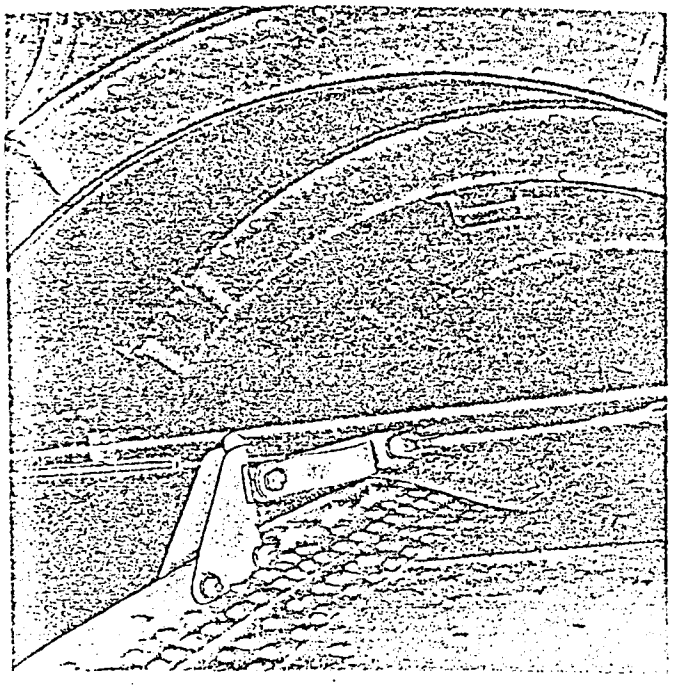

33,521

Figure 2-107. Rudder Stop—Cable Attachment

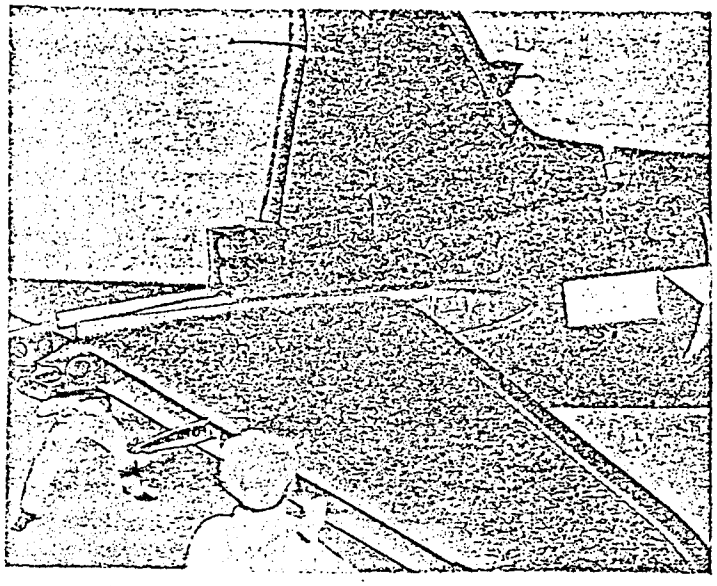

33,522

Figure 2-108. Installation of Horizontal Stabilizer

2-145. REMOVAL OF VERTICAL STABILIZER.

a. Remove the rudder as outlined in Section XI.

b. Remove the bolts and disconnect the two antenna wires from the lugs on the leading edge of the stabilizer tip.

c. Remove the fairing strips and collar *(see figure 2-109)* from the lower end of de-icing boot.

d. Remove the de-icing access door *(see figure 2-109)*, in the fairing forward of the stabilizer and disconnect the de-icing boot pipe.

e. Remove the bolts attaching the rear spar of the stabilizer to the fuselage. To gain access to the bolt heads, loosen the lower end of the weather seal *(see figure 2-110)* on the aft side of the spar.

f. Remove the screws attaching the stabilizer to the fuselage and the fairing.

g. Tilt the stabilizer aft *(see figure 2-110)* and remove it from the fuselage.

2-146. DISASSEMBLY OF VERTICAL STABILIZER.

a. Remove the de-icing boot fairing strip and the top section of the de-icing boot.

b. Remove the attaching screws and the tip from the vertical stabilizer.

Key to Figure 2-106

Item	*Nomenclature*	*Item*	*Nomenclature*
1.	Rudder Hinge	7.	Bolt (vertical stabilizer attach.)
2.	Rudder Hinge	8.	Bolt (attach. horizontal stabilizer to fuselage)
3.	Vertical Stabilizer Tip	9.	Outer Elevator Hinge
4.	Vertical Stabilizer Assembly Complete	10.	Horizontal Stabilizer Tip Assembly
5.	Goodrich De-Icer Shoe	11.	Goodrich De-Icer Shoe
6.	Screw (stabilizer attach.)		

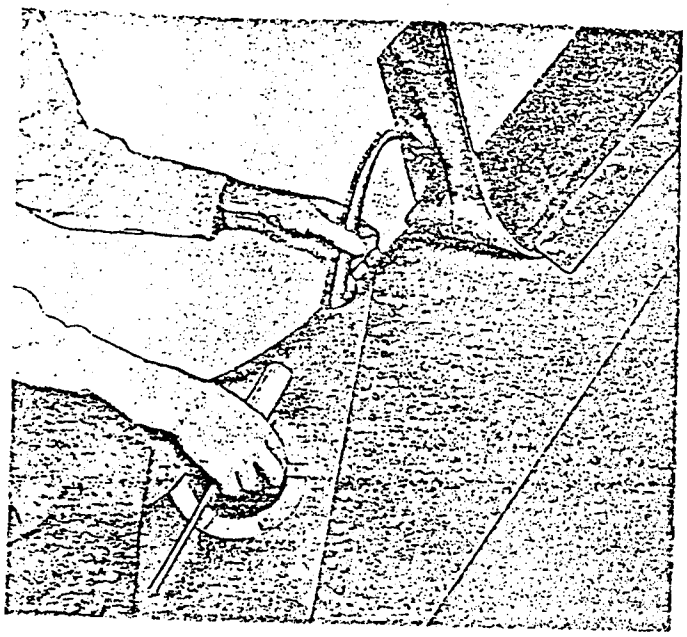

33,523

Figure 2-109. Detachment of De-Icing Boot from Vertical Stabilizer

2-147. ASSEMBLY OF VERTICAL STABILIZER.

a. Install the attaching screws and the tip to the vertical stabilizer.

b. Install the top section of the de-icing boot.

c. Install the de-icing boot fairing strip.

2-148. INSTALLATION OF VERTICAL STABILIZER.

a. Locate the forward end of the stabilizer first as shown in figure 2-110, then lower the aft end into place. Use metal strips to assist in clearing the stabilizer plating when lowering it over the fuselage plating.

b. Install the screws attaching the stabilizer to the fuselage and the fairing.

c. Install the bolts attaching the rear spar of the vertical stabilizer to the fuselage.

d. Connect the de-icing boot pipe in the fairing forward of the stabilizer and install the access door *(see figure 2-109).*

e. Install the collar and fairing strips at the lower end of the de-icing boot.

f. Bolt the two antenna wires to the lugs on the leading edge of the stabilizer tip..

g. Install the rudder as outlined in Section XI.

2-149. PIPING.

2-150. GENERAL DESCRIPTION. The following paragraphs contain information regarding maintenance and replacement of piping in the airplane. Identification of the various piping systems is provided by color bands at the ends of each pipe *(see figures 2-111 and 2-112).*

2-151. PIPING SIZE AND LENGTH. Replace the piping with the same type as that removed. Cut the piping approximately 10 per cent longer than required. After the required bends have been made, the new piping will be approximately ½ to 2 inches longer than the one replaced. Make allowances for flaring the ends before cutting off the excess material.

2-152. PIPING TEMPLATE: If the removed pipe is intact, and if the bends have not been altered, use it as a template to bend the new pipe. Use soft iron wire or ⅛-inch piping when making a new design or template.

a. Follow the routing of the original piping installation. If a new routing is necessary, care should be taken to select the path which requires the least total degrees of bend.

b. Provide supports with a maximum spacing of 18 inches for the new route selected.

Note

Place the supports as close to the bends as possible, to minimize the amount of unsupported piping protruding beyond the straight lines between the supports.

c. Bends in flared piping should not be closer to the flared ends than shown in figure 2-113.

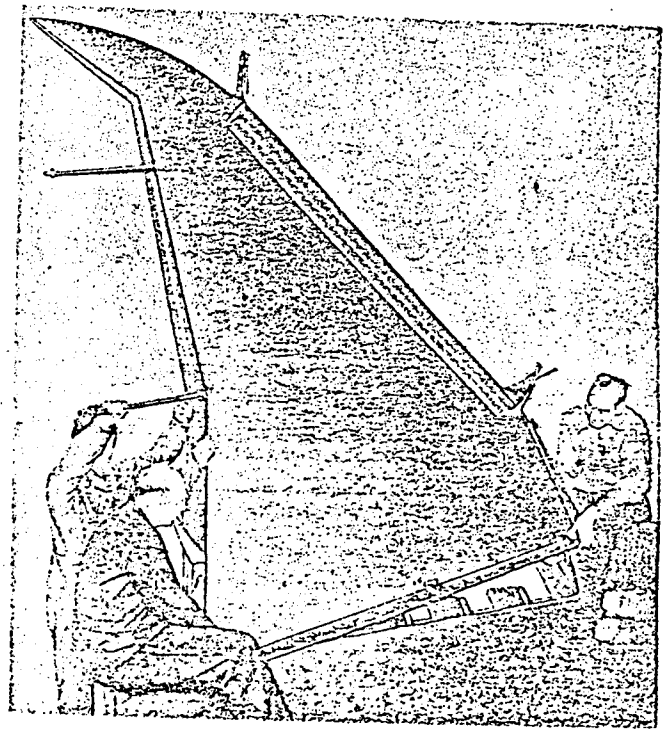

33,524

Figure 2-110. Installation of Vertical Stabilizer

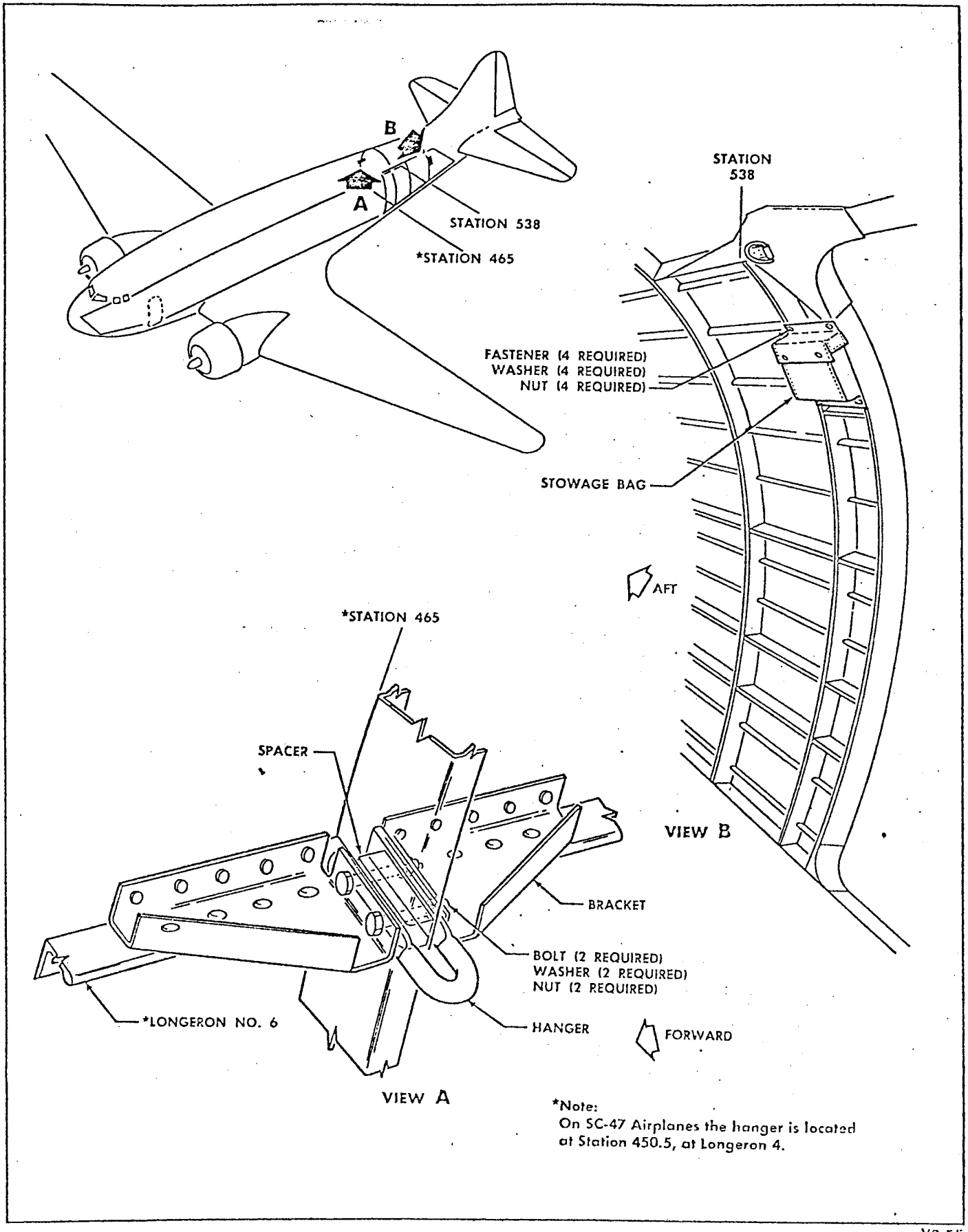

V2-55

Figure 2-138. Personnel Retaining Harness Hanger and Stowage Bag Some (C-47 Airplanes Except AC and DC Configurations)

2-362. CIRCUIT WIRING DIAGRAM BOOK. A system wiring diagram book is stowed in the data case on the bulkhead at fuselage station 177.

2-363. PERSONNEL RETAINING HARNESS (MOST C-47 AIRPLANES).
(See figure 2-138.)

2-364. The personnel retaining harness is used to prevent personnel from falling through the open cargo door during emergency jettisoning or cargo dropping operations, or when loading cargo on the ground. A bag containing the stowed harness is located just aft of the cargo door, fastened to the fuselage. To use the harness, attach the yellow harness hook to the yellow hanger fastened to the fuselage framing opposite the door. The harness is not installed on EC and VC configurations.

2-365. WINTERIZATION.

2-366. GENERAL INSTRUCTIONS. When an installed item has been winterized, replacement must be made with a like winterized item wherever possible.

2-367 POWER PLANT LUBRICATION WINTERIZATION. For low-temperature operation, use Grade 1100 oil, Specification MIL-L-22851. If the airplane records do not indicate that the engine contains Grade 1100 oil, change the oil at the staging area.

2-368 CARBURETOR HEAT AND ALCOHOL ANTI-ICING SYSTEMS WINTERIZATION. The carburetor heat system and the carburetor alcohol anti-icing system must be checked for completness and proper functioning prior to departure for the arctic. Refer to Section IV.

2-369 FUEL SYSTEM WINTERIZATION. Fuel system winterization is accomplished as outlined in the following paragraphs.

2-370 FUEL TANK DRAIN SUMP WINTERIZATION. In the main and auxiliary fuel tank sumps, replace the screw-type drain cocks with self-locking drain cocks which have a 3/8- to 1/8-inch reducer.

2-371 FUEL STRAINER WINTERIZATION. Equip the fuel strainer of each engine with self-locking drain cocks.

2-372 OIL SYSTEM WINTERIZATION. Oil system winterization is accomplished as outlined in the following paragraphs.

2-373 OIL TANK DRAIN SUMP WINTERIZATION. Replace the screw-type drain cock with a self-locking drain cock.

2-374 OIL SUCTION LINE DRAIN WINTERITION.
(See figure 2-140.)

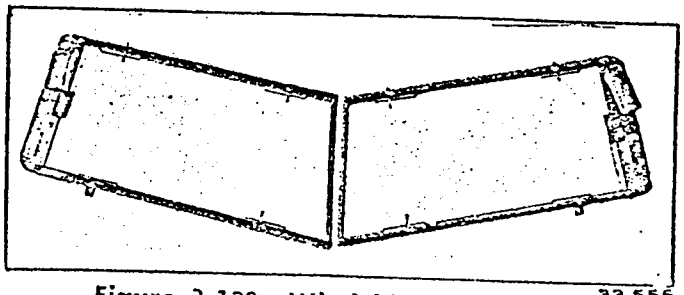

Figure 2-139. Windshield Defrosters

a. A drain at the lowest point of the engine oil in pipe is not provided on the C-47 airplane. Such a drain is desirable to check for presence of fluid oil at the inlet to the engine oil pump before starting. Install two straight-through self-locking type drain cocks at the lowest point of this pipe. Weld a boss having a 1-inch, 14 NF-3 internal thread to the OIL-IN pipe *(see figure 2-140)*. Safety the valve body to the boss with lockwire. Most C-47 airplanes have a wye drain in the feathering pipe which will drain the system, but this will not assure fluid oil at the engine OIL-IN pipe.

b. When fire prevention modification has been complied with, fabricate the oil inlet pad in accordance with figure 2-141 for the installation of the drain cock.

2-375 SURGE VALVE WINTERIZATION. Replace oil systems using a pressure relief valve, or a separate wall-mounted type surge valve with a type D-8 combination surge thermostatic valve. An oil cooler must be used with this valve.

2-376. OIL DILUTION WINTERIZATION. The oil dilution system must be checked for completeness and proper functioning. Refer to Section VI. Provide the following placard above the oil dilution switches.

OIL DILUTION

Anticipated OAT.		
(Degrees Fahrenheit)	*(Degrees Centigrade)*	*Time (Minutes)*
40 to 10	4 to −12	2
10 to −20	−12 to −29	4
−20 to −50	−29 to −46	7

2-377. IMMERSION HEATERS WINTERIZATION. On the nacelle near the oil filler cowling door, stencil in 1/2-inch letters: USE OIL IMMERSION HEATER, 750w-115v.

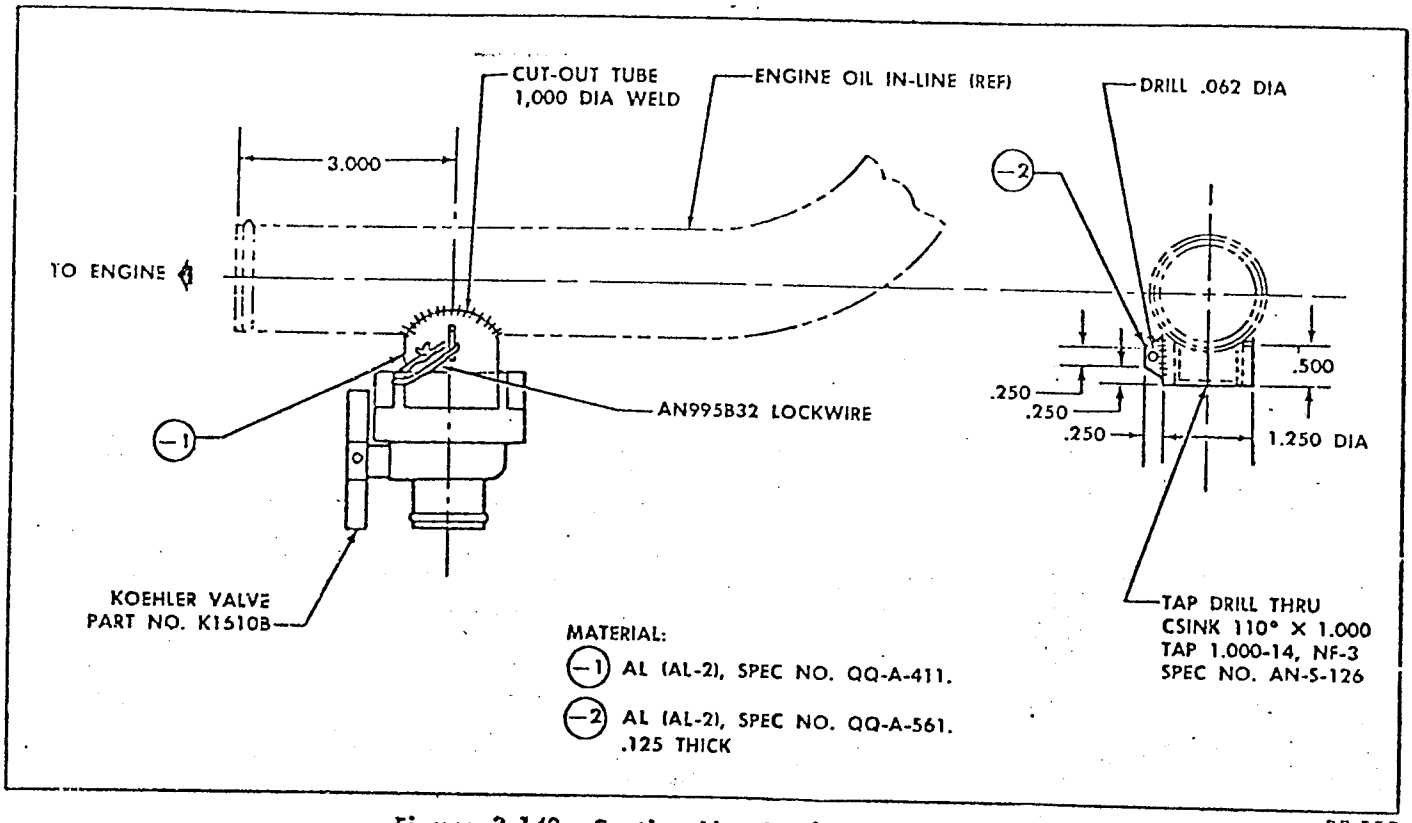

Figure 2-140. Suction Line Drain Modification

33,559

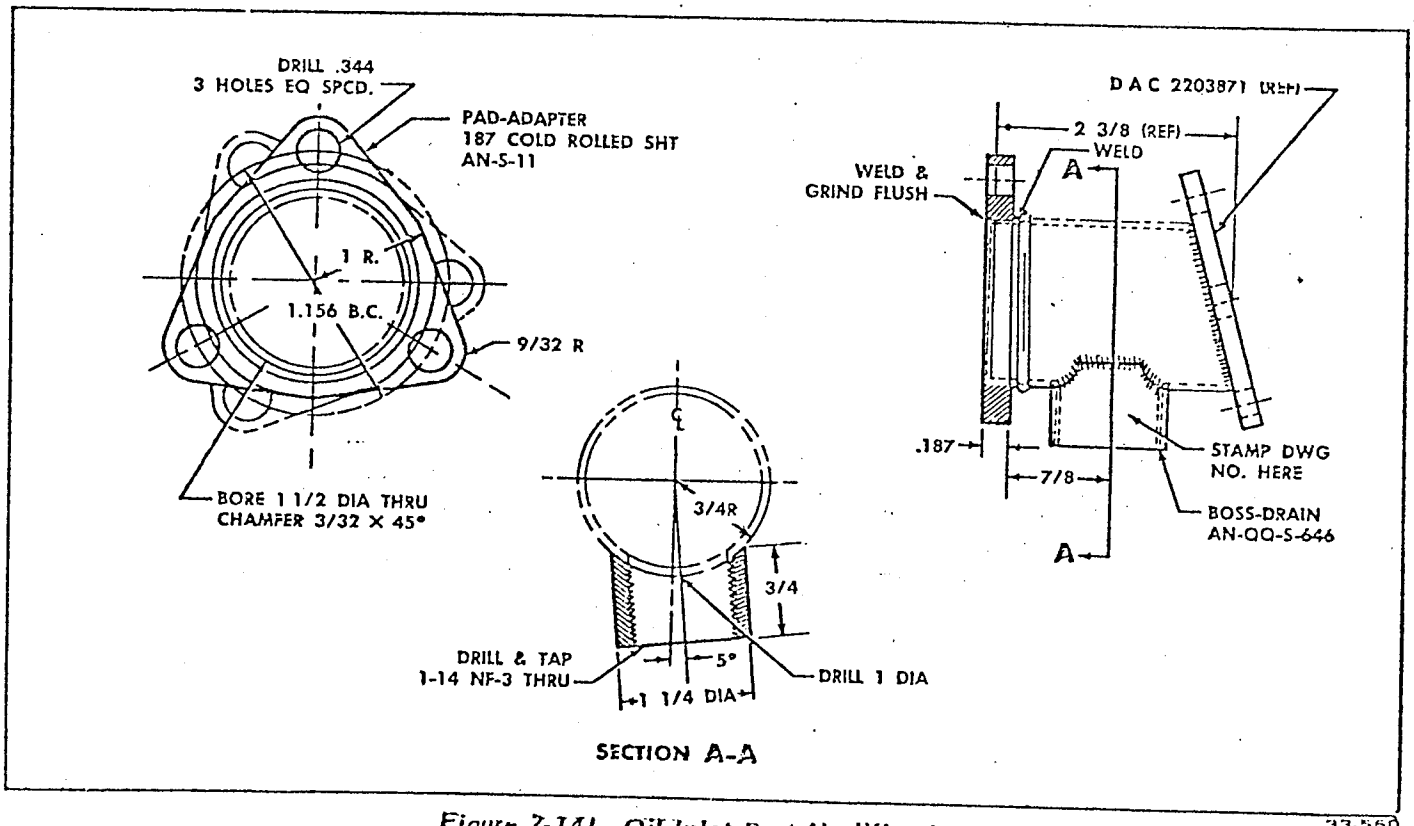

Figure 2-141. Oil Inlet Pad Modification

33,560

TABLE 2-8
WINTERIZED PACKINGS FOR VALVES AND ACTUATING CYLINDERS

Component	*Part No.*	*Reqd Unit*	*Part No.*	*Stock No.*
Pump selector valve assembly.	4209830 or 4118979	4 O-ring	AN6227B7	5330-290-8813
		1 O-ring	AN6227B13	5330-641-0642
		1 O-ring	AN6227B27	5330-582-7535
Landing gear retracting strut.	5209850	1 O-ring	AN6227B22	5330-196-5387
		1 O-ring	AN6227B27	5330-582-7535
		1 O-ring	AN6227B33	5330-260-9309
		2 O-ring	AN6227B37	5330-196-5323
Landing gear retracting strut.	5110586	3 V-ring	40B629B12-116	5330
		4 V-ring	40B629B12-126	5330
Landing gear and wing flap valves.	4209829	4 O-ring	AN6227B7	5330-290-8813
		1 O-ring	AN6227B13	5330-641-0642
		1 O-ring	AN6227B27	5330-582-7535
Landing gear and wing flap valves.	4118984	Remove and replace this valve with Valve 4208929 and modified in the preceding.		
Wing flap actuator.	5117384	3 V-ring	40B629B12-024	5330-489-3842
		4 V-ring	40B629B12-110	5330
Wing flap actuator.	5209970	2 O-ring	AN6227B15	5330-285-6877
		1 O-ring	AN6227B29	5330-196-5316
Cowl flap actuator.	2001	3 O-ring	AN6227-B12	5330-297-5413
		3 O-ring	AN6227B23	5330-196-5385
Cowl flap actuator.	2116312	Remove and replace this actuator with actuator 2001 and modified in the preceding.		
Nonram carburetor air filter actuator.	B10666-6 or GC75-7	1 O-ring	AN6227B8	5330-187-3633
		1 O-ring	AN6227B11	5330-187-3635
		1 O-ring	AN6227B17	5330-187-3638
Hydraulic compensating cylinder.	4189700 or 22087	1 O-ring	AN6227B16	5330-196-5379
		1 O-ring	AN6227B18	5330-196-5381
		1 O-ring	AN6227B31	5330-198-6194
Two-speed blower control actuator.	B10666-6 or GC75-7	1 O-ring	AN6227B8	5330-187-3633
		1 O-ring	AN6227B11	5330-187-3635
		1 O-ring	AN6227B17	5330/187-3638

2-378. PRESSURE GAGE WINTERIZATION. Install the oil indicating system and incorporate the features of a directly connected oil pressure system with the instrument panel service fittings. Service the pipes connecting the pressure gage and the crankcase with hydraulic oil, Specification MIL-O-5606, prior to departing for the arctic at the time of the 25-hour inspection, or whenever the gage becomes sluggish. Carefully check for and correct all leaks in this system.

2-379. GROUND PREHEAT WINTERIZATION. Stencil on the cowling assembly inboard bottom nacelles, in convenient size letters: OPEN FOR GROUND PREHEAT.

2-380. HYDRAULIC SYSTEM COMPONENTS WINTERIZATION. Hydraulic system components winterization is accomplished as outlined in the following paragraphs.

2-381. ACTUATORS AND VALVES PACKING WINTERIZATION. Hydraulic system components which indicate leakage and which are critical in regard to leakage at low temperatures, such as actuators, operating control valves, and all other hydraulic units undergoing winterization, must have the -40° C (-40° F) packings replaced with those made to Specification MIL-R-5516, or must be replaced with parts already made to this Specification. The hydraulic components listed in Table 2-8 are considered critical and must be provided with winterized approved packings. Hydraulic components of the early airplanes have V-ring type packings, and the later airplanes have O-ring type packings. When making replacements, use approved -54° C (-65° F) packings of the same type. Replace the packings in the valves and actuating cylinders listed in Table 2-8.

2-382. FILTER WINTERIZATION. Thoroughly clean or replace the hydraulic filter element.

2-383. AIR VALVE WINTERIZATION. Replace all air valves which are being used for servicing hydraulic accumulators and landing gear shock struts with a hight-pressure air valve assembly.

2-384. ELECTRICAL SYSTEM WINTERIZATION. Electrical system winterization is accomplished as outlined in the following paragraphs.

2-385. STARTERS WINTERIZATION. Remove the combination inertia-direct cranking starters, and replace them with direct-cranking type starters (*see figure 2-142.*)

2-386. AUXILIARY POWER PLANT WINTERIZATION. An auxiliary power plant is an essential cold weather requirement and will be needed for all take-off, landing, and ground operations. Install an auxiliary power plant, Model V32D2, in accordance with AF drawing No. 49K7056 and details, using AF wiring diagram 49C7062.

Note

Winterization of the auxiliary power plant may be provided for at the discretion of the theater commander.

An auxiliary power plant heater assembly, composed of a metal hood and a built-in heating unit, need not be installed if it is decided by the using activity that the following reasons make the installation unjustified:

a. Weight penalties — 110 pounds.

b. Ground heaters adequate at contacting bases.

c. Airplane cabin heating systems adequate for heating the auxiliary power plant in flight.

d. Time and delay (if any) when including this modification prior to delivery.

Provide a placard near the auxiliary power plant control panel assembly and a stencil near each wing fuel tank filler neck to read as follows.

Placard

> WARNING: Do not operate APP during airplane refueling or if long range auxiliary fuel tanks are installed.

2-387. FLIGHT COMPARTMENT AND CABIN HEAT WINTERIZATION. Early airplanes have a steam heating system which is generally unsatisfactory in extreme cold. Drawings, information, and necessary equipment to improve this system are not available. It is not considered practical to convert these airplanes to the exhaust heat exchanger system; therefore, it is recommended that such airplanes not be deployed to cold weather theaters.

2-388. CREW COMPARTMENT WINTERIZATION. Airplanes AF42-92092DK and subsequent, and AF42-23538-DL and subsequent, using heat exchangers, have adequate heat in the crew compartment. Check this part of the system for completeness and proper functioning during winterization.

2-389. CARGO COMPARTMENT WINTERIZATION. Heat available to the cargo compartment from the engine exhaust exchanger system is inadequate and will have to be supplemented with an additional heat source as well as undergo the following to assure more satisfactory cargo compartment temperatures.

a. Provide felt batting insulation liner (kapok or equivalent) to the entire interior of the cargo compartment.

b. If the main cargo door's sealing material has been damaged from previous loading and unloading, replace it to assure maximum protection against cold outside-air seepage.

c. Make necessary adjustments to all dump, or overboard valves, to assure positive (not permanent) closure in both extreme positions.

d. Install a gasoline combustion heater in accordance with Douglas drawing No. 5142197. Provide the following placard conspicuously on or near the combustion heater controls.

WARNING

Do not operate this heater if long range auxiliary fuselage fuel tanks are installed.

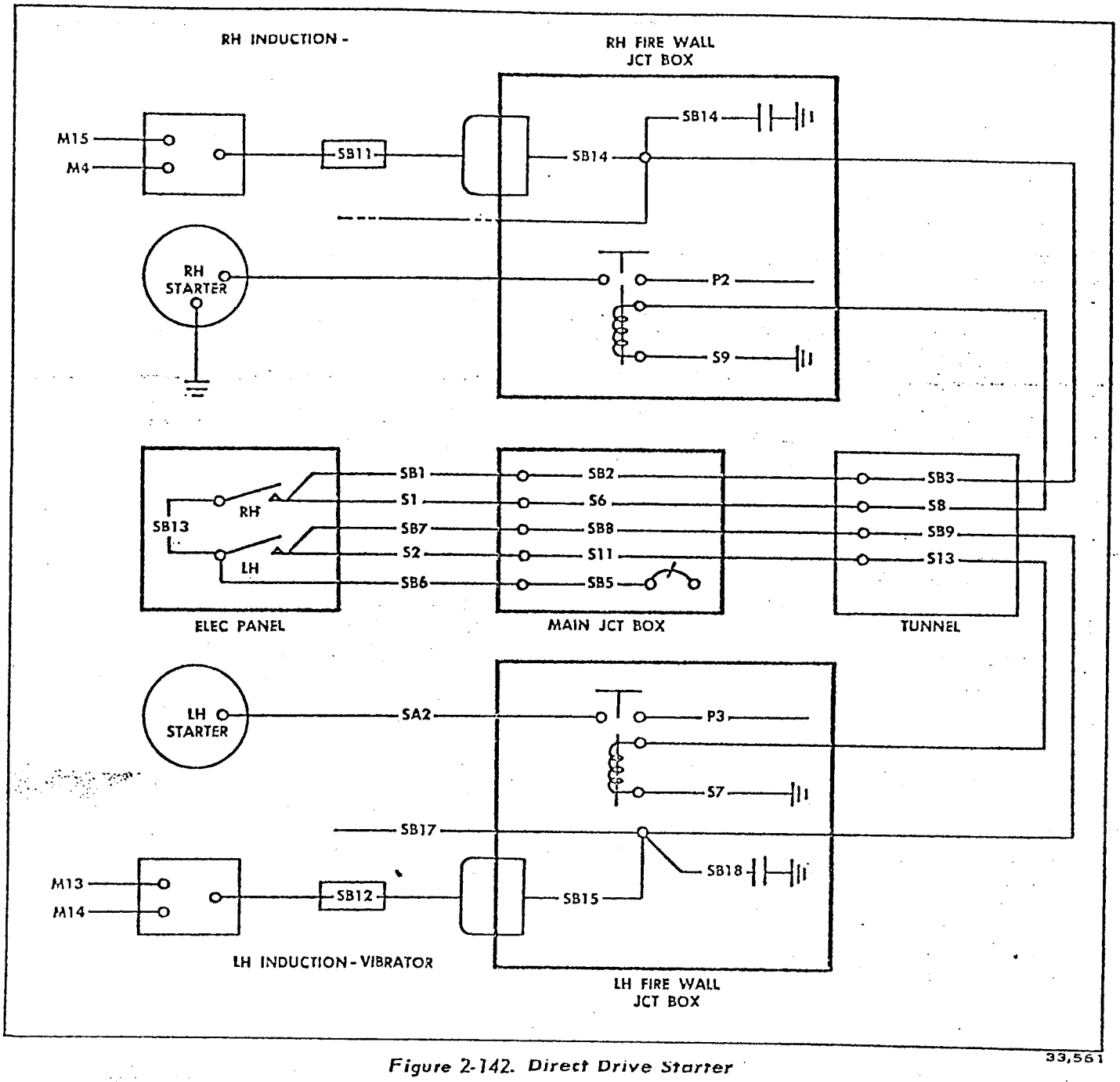

33,561

Figure 2-142. Direct Drive Starter

2-390. WINDSHIELD DE-ICING AND DEFROSTING WINTERIZATION. Windshield de-icing and defrosting winterization is accomplished as outlined in the following paragraphs.

2-391. DEFROSTER BLOWER WINTERIZATION. Install a defroster blower between the hot-air supply duct and the 4-way branch duct. This will force defrosting air to the astrodome and the windshield while the airplane is in flight or while ground operations are being performed. For information regarding installation of defroster blower, see section III.

2-392. ALCOHOL SPRAY WINTERIZATION. Check the windshield alcohol spray system for completeness and proper functioning prior to the airplane's departure for the arctic.

2-393. WINDSHIELD WIPERS WINTERIZATION. Remove any windshield wipers which carry motor No. D1001-1, and replace with wipers which carry Motor No. D1500-3.

2-394. WING AND EMPENNAGE DE-ICING WINTERIZATION. Install a complete surface de-icing system and check for proper functioning. Refer to Section III.

2-395. PROPELLER WINTERIZATION. Propeller winterization is accomplished as outlined in the following paragraphs.

2-396. ANTI-ICING WINTERIZATION. Ascertain that all propeller anti-icing system components are assembled in accordance with the illustration of the

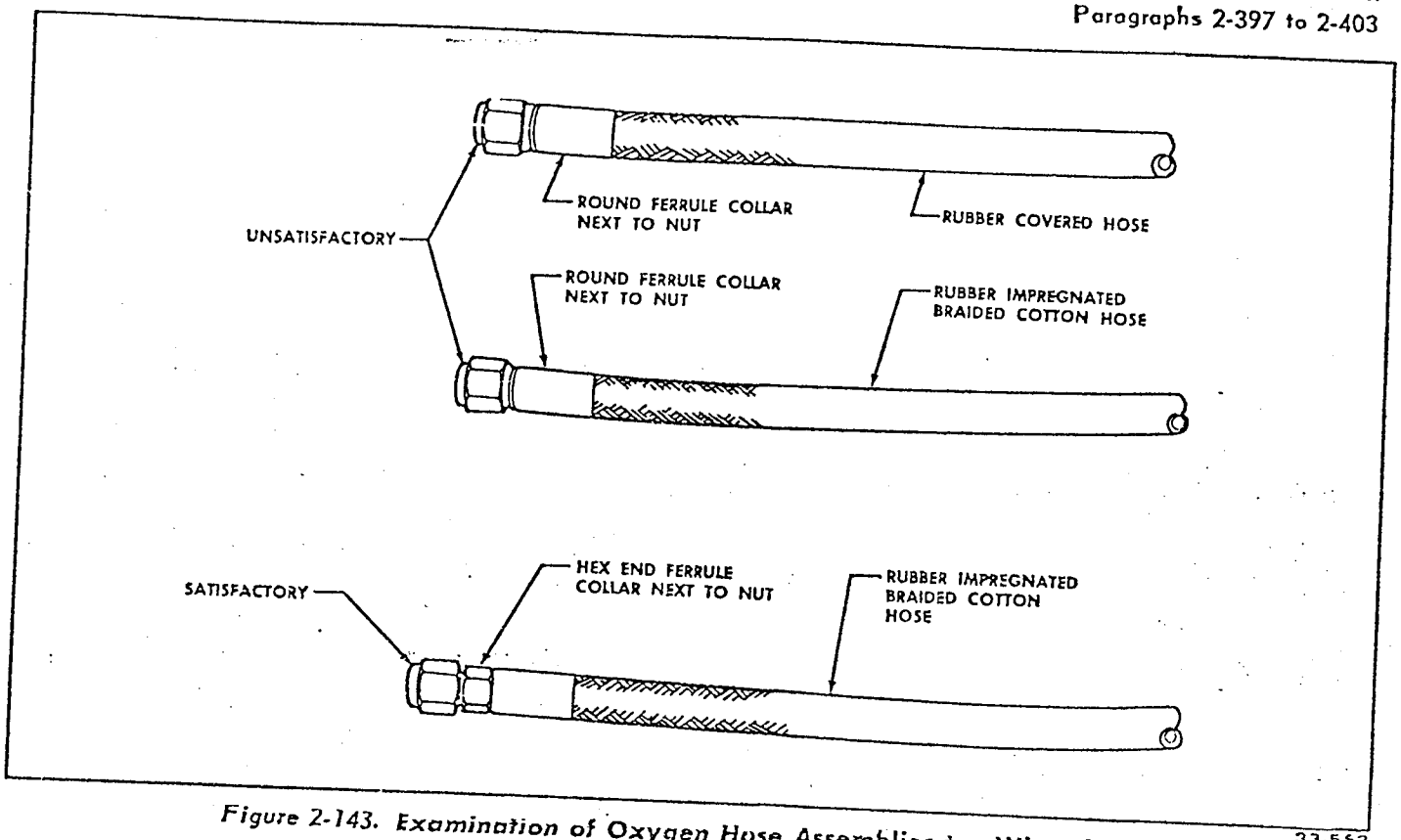

Figure 2-143. Examination of Oxygen Hose Assemblies for Winterization

concerned propeller and airplane technical orders. Fill the anti-icing alcohol tank with isopropyl alcohol, Specification MIL-F-5566.

2-397. OXYGEN HOSE ASSEMBLIES WINTERIZATION. *(See figure 2-143.)* Oxygen hose assemblies winterization is accomplished as outlined in the following paragraphs.

2-398. Oxygen hose assemblies which have a rubber covering or an impregnated braided cotton hose with a round end on the ferrule collar next to the swivel nut must be replaced. Inspect, and replace if necessary, all oxygen hose assemblies which have rubber impregnated cotton hose with a hexagon end on the ferrule collar next to the swivel nut.

2-399. CONTROL SYSTEM WINTERIZATION. Control system winterization is accomplished as outlined in the following paragraphs.

2-400. CONTROL SYSTEM LUBRICATION WINTERIZATION. Clean and lubricate all antifriction bearings, enclosed universals, control-surface pulley bearings, and actuating mechanism linkages with grease, Specification MIL-G-3278. Lubricate surface-control system gears, chains, sprockets, and worms with grease, Specification MIL-G-7118.

2-401. CABLE TENSION WINTERIZATION. Adjust the control cables as specified in Section X. After the airplane has arrived at the arctic theater, and if it is expected to operate there at low temperatures for some time, readjustment will again be made to those tensions specified in Section XI. Care must be maintained to prevent excessive tensions by readjustment if temperature increase occurs.

2-402. FLIGHT AND NAVIGATION SYSTEM WINTERIZATION. Flight and navigation system winterization is accomplished as outlined in the following paragraphs.

2-403. ELECTRICAL FLIGHT INSTRUMENTS WINTERIZATION. *(See figure 2-144.)* A minimum, one set of electrical flight instruments will be installed as a component of the pilot's instrument panel. Existing installations of any electrical instrument will be supplemented with whatever additions are necessary to group the three instruments in one panel. No difficulty will be encountered when installing the electrical instruments into the pilot's instrument panel, as both the flange dimensions and the method of mounting are identical with the air-driven instruments.

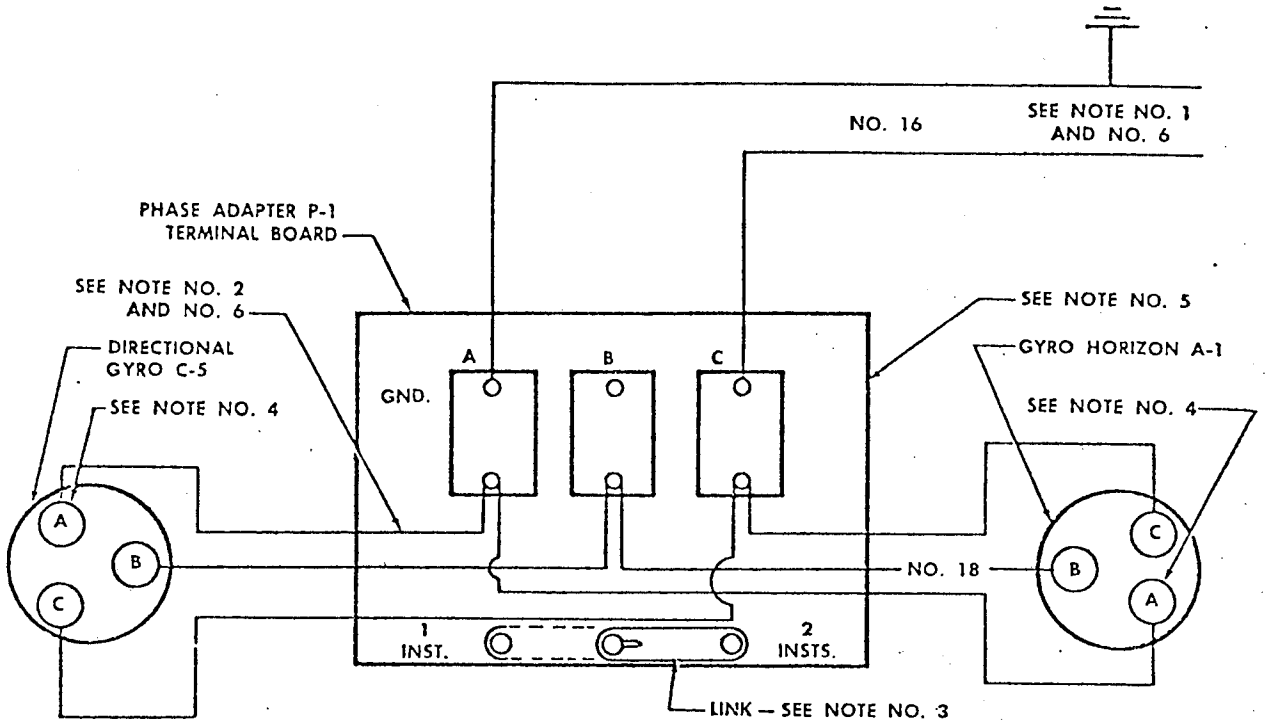

1. Connect the single phase 115V, 400 cycle supply (from the ship inverter) to terminals A (GND) and C (115V ac). Ground side of inverter must be connected to ground of phase adapter.
2. The connection between the phase adapter and the instruments should be so wired that the terminals marked A, B, C of the instruments are connected to the terminals marked A, B, C of the phase adapter respectively.
3. For one or two instrument operations connect link to proper terminal. (Link as shown above is in the two instrument positions.)
4. If any instrument terminal is ground it must be connected to A of phase adapter. Ascertain instrument ground by using a d-c ohmmeter. (Grounded terminal will indicate no resistance to ground.)
5. Install phase adapter behind the instrument panel, but not in the proximity of other instruments which may be affected by magnetic material.
6. The ungrounded phase "B" and "C" between the phase adapter and the instruments will be protected by a "Slo-Blo" vibration-resistant type one-half (1/2) ampere fuse. The lead from phase adapter to pin "A" will be grounded.

Figure 2-144. Electrical Flight Instrument Wiring Instructions

33,563

2-404. PARTS LIST FOR FLIGHT INSTRUMENT WINTERIZATION. Parts required for flight instrument modification are listed in table 2-9.

2-405. PHASE ADAPTER WINTERIZATION. Since the inverters installed on the airplane supply single-phase current, the circuit requires a phase adapter to change the supply to 3-phase current in the circuit which supplies the attitude indicator directional indicator (see wiring diagram, figure 2-144). Install the phase adapter behind the instrument panel no closer than 18 inches to other instruments that may be influenced magnetically. Allow adequate space above the adapter for removal of the cover. The supporting brackets beneath the mounting screws must be in the same plane to avoid distortion of the component parts.

TABLE 2-9

PARTS FOR FLIGHT INSTRUMENT WINTERIZATION

Part No.	*Type*	*Nomenclature*
B4F	C-5	Turn-and-Slip Indicator
657070	E-1	Attitude Indicator
652191	C-5	Directional Indicator
	P-1	Phase Adapter
212000-758		Fuse
556000-855		Fuse Holder

2-406. DIRECTIONAL INDICATOR WINTERIZATION. To offset drift that will be inherent in the instrument when functioning in high latitudes, recalibrate the directional indicator under the following conditions:

a. Airplane permanently based in the arctic theater.

b. Transient airplane that will remain in the arctic theater for more than 30 days.

c. Airplane that will operate above 70 degrees north latitude regardless of the duration of the operation.

Note

Airplanes performing shuttle runs between the United States and the arctic theater will not require recalibrated instruments.

2-407. AUTOPILOT WINTERIZATION. Experience has indicated that air-driven auto-pilots become sluggish and start to hunt excessively or to overcontrol at temperatures below -15°C (+5°F). If this occurs, do not use the autopilot. The following bold face placard must be conspicuously placed on the instrument panel adjacent to the bank-and-climb control assembly:

CAUTION

DO NOT USE BANK-AND-CLIMB CONTROL AS A FLIGHT INSTRUMENT AT COCKPIT TEMPERATURES OF —15°C (+5°F) OR BELOW.

2-408. WINTERIZATION OF MISCELLANEOUS EQUIPMENT. Winterization of miscellaneous equipment is accomplished as outlined in the following paragraphs.

2-409. GENERAL WINTERIZATION LUBRICATION. *(See figure 2-59.)* Proper lubrication is of vital importance in assuring satisfactory cold weather performance. Lubricate the airplane as shown in figure 2-59 prior to departure for the arctic region, regardless of relative inspection period. When applying a lubricant, remove the old lubricant, or displace it by the new application, rather than merely adding to the old oil or grease. Remove excess lubricant with a clean cloth.

2-410. PROTECTIVE COVERS FOR COLD WEATHER OPERATION. Wing and tail covers are usually considered ground equipment, but it is advisable to stow them on any airplane destined for an arctic base, since they may not be available there. The non-waterproof type is preferred, because of its light weight, especially during the cold dry season. During the fall and early spring, when the snow is subject to alternate thawing and freezing, use waterproof-type wing and tail covers, to prevent the freezing of the covers to the flight surfaces. Check the airplane to be sure that the engine covers are aboard. Be sure the pitot head is protected from blowing snow. Be sure the covers for the pitot head are stowed on the airplane. Check and test the heating element for proper operation.

2-411. TIRES AND TUBES FOR COLD WEATHER OPERATION. Ice-grip tires with steel spring inserts may be installed at the discretion of the arctic theater commander. Install winterized tubes in these tires. Install a special valve cap (yellow) in the inner tubes. When ice-grip tires are installed, installation of non-ferrous flight wheel brake plates is necessary to eliminate sparks in the wheel well caused by contact between the steel plates and the steel impregnated ice-grip tire treads. The non-ferrous plates can be installed as follows:

a. Remove the steel plates, part No 4115223-14, and replace with plates (4 per brake) made from half hard tempered brass sheet, Specification QQ-B-639, similar to the steel plates but with the thickness increased to 0.125 inch.

b. Install the brass plates with screws, part No. AN505B8R10, washers, part No. AN960-8, and nuts, part No. AN365-832 (8 per brake).

2-412. AIRPLANE MARKINGS FOR WINTERIZATION. Provide color markings to permit visible location of the airplane in case of crash landings on ice- or snow-covered terrain.

SECTION III

PNEUDRAULICS

3-1. HYDRAULIC SYSTEM.

3-2. GENERAL DESCRIPTION. *(See figures 3-1 through 3-4.)* A pressure-accumulator type hydraulic system is installed on the C-47A, C-47B, C-47D, and C-117 airplanes to operate the landing gear, brakes, cowl flaps, wing flaps; a nonram carburetor air filter mechanism is installed on C-47 airplanes only; a two-speed supercharger is installed on some airplanes; and windshield wipers are installed on all airplanes. An engine-driven hydraulic pump is installed on the accessory drive section of each engine. Approximately 6 gallons of hydraulic fluid, Specification MIL-O-5606, are required to fill the system.

3-3. Hydraulic fluid is supplied by gravity from the hydraulic fluid reservoir to the engine-driven hydraulic pumps, which furnish pressure to the hydraulic and the autopilot systems. During normal operation, the left engine-driven pump supplies fluid pressure to the hydraulic system and the right engine pump furnishes pressure to the autopilot system. The direction of the flow from the engine-driven pumps is selected by the engine pump selector valve located on the hydraulic control panel. The hydraulic fluid, under pressure from the engine pump, flows through the engine pump selector valve and the hydraulic pressure regulator, and then to the various systems. A hydraulic pressure accumulator is connected to the pressure pipe from the pressure regulator and stores energy (pressure) so that a supply of hydraulic fluid under pressure is available instantly when the engine-driven pumps are inoperative and/or when fluid is drawn from the pressure system faster than the engine-driven pump can replenish the fluid supply. The hydraulic pressure regulator is set to maintain a system operating pressure of 600 to 875 psi. If the hydraulic pressure regulator fails, the system relief valve opens when the system pressure increases to 1000 (±50) psi and bypasses the excess fluid to the reservoir. The hydraulic hand pump, located on the hydraulic control panel, is provided to operate the hydraulic system units when there is insufficient pressure in the hydraulic system, or when the engine pumps fail in flight. The hand pump can also be operated to increase the pressure in the hydraulic pressure accumulator for ground operation of the hydraulic system when the engines are not running. The hand pump-to-pressure accumulator shutoff valve, located on the hydraulic control panel, provides a bypass around the check valve in the pressure manifold when it is necessary to increase the pressure in the pressure accumulator by operating the hand pump. Disconnect valves are provided in the supply and pressure pipes at the firewall so that the power plant can be removed without draining or plugging the hydraulic pipe.

Note

> If a hydraulic unit is suspected to be functioning improperly, test it in the airplane as outlined in paragraph 3-23, before considering removal for replacement or overhaul.

3-4. The daily maintenance of the hydraulic system consists of checking the general condition of all operating mechanisms for the presence of leaks on the surface of the pipes and the pipe connections; for proper operation of the hydraulic system and units; and for servicing the reservoir. Insufficient hydraulic fluid, air in the system, leaks in the system, and clogged pipes or fittings are conditions that will cause improper operation of the complete system. The following conditions will cause trouble in the hydraulic system: internal or external fluid leaks; foreign particles clogging or holding open internal parts of a unit; improper adjustments; and excessive clearances. If the trouble is isolated at a particular hydraulic unit, remove and replace the unit.

3-5. GENERAL MAINTENANCE PROCEDURES FOR HYDRAULIC SYSTEM. The components of the various hydraulic systems installed are basically the

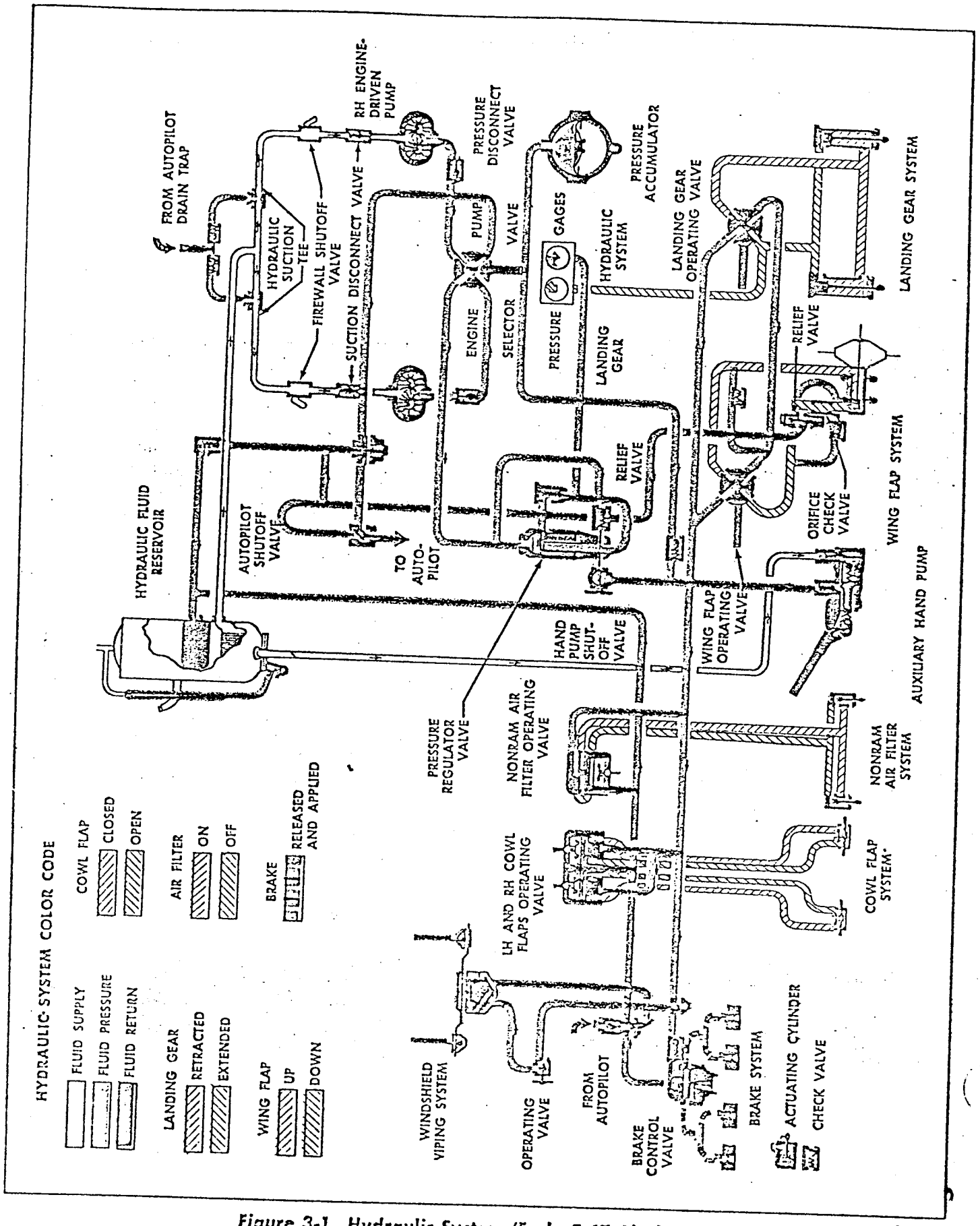

Figure 3-1. Hydraulic System (Early C-47 Airplanes)

33,283

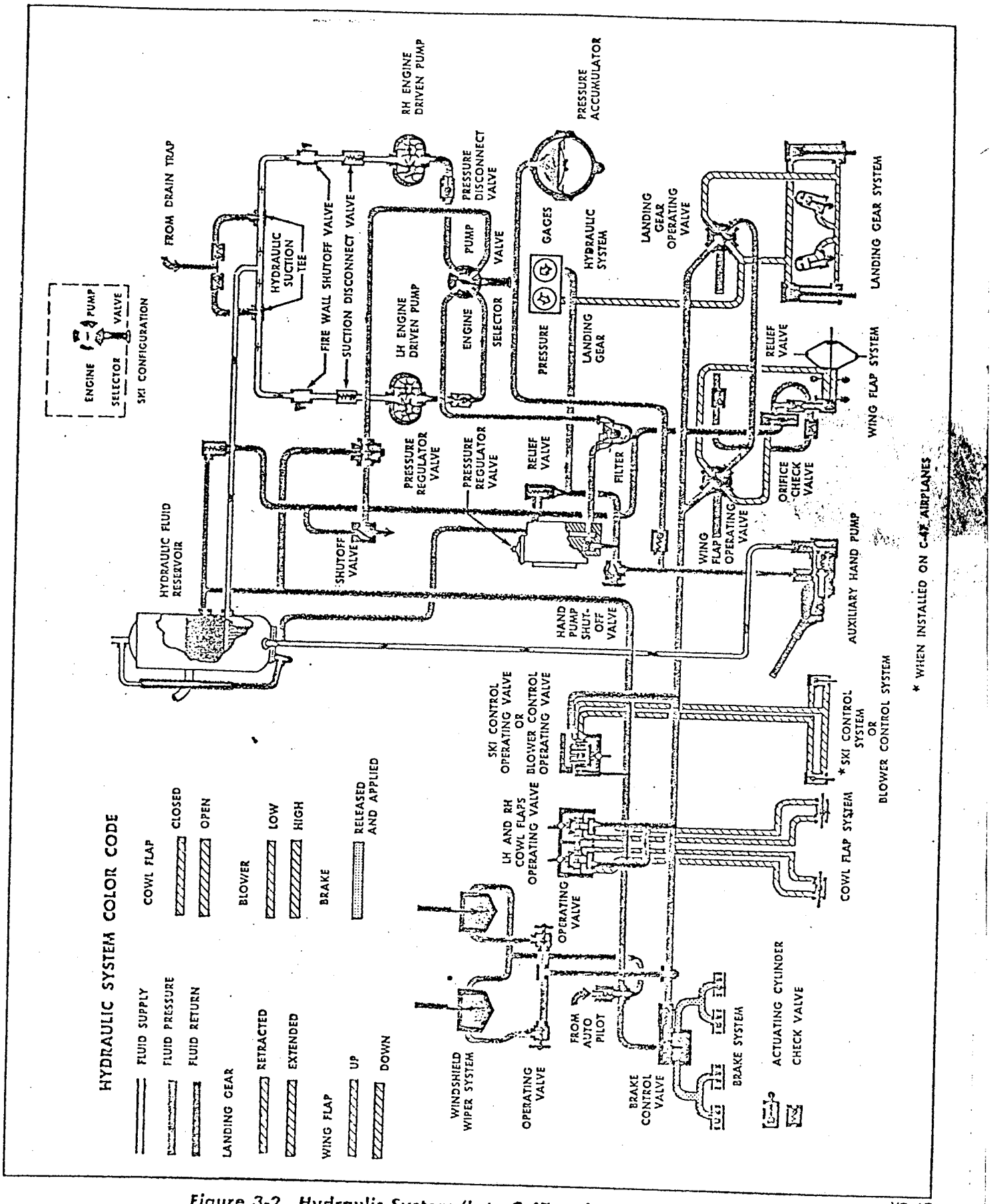

Figure 3-2. Hydraulic System (Late C-47 and C-117 Airplanes)

V2-40

Key to Figure 3-3

Item	Nomenclature	Item	Nomenclature
1.	Brake Control Valve	10.	Hydraulic Control Panel
2.	Hydraulic System Pressure Gage	11.	Hand Pump-to-Pressure Accumulator Shutoff Valve
3.	Cowl Flap Control Valve Assembly	12.	Wing Flap Control Valve
4.	Check Valves	13.	Engine-Driven Hydraulic Pump
5.	Hydraulic System Pressure Relief Valve	14.	Landing Gear Control Valve
6.	Hydraulic System Pressure Accumulator	15.	Hydraulic Hand Pump
7.	Hydraulic System Pressure Regulator	16.	Firewall
8.	Hydraulic System Fluid Reservoir	17.	Firewall Shutoff Valve
9.	Engine-Driven Hydraulic Pump Selector Valve		

same in construction. The following general procedures will be used.

a. When a faulty unit has been overhauled, make a bench test before reinstallation.

b. Use approved fitting wrenches to remove the elbows.

c. After disassembly, wash the parts with solvent, Federal Specification P-S-661, and dry thoroughly.

d. Flush reworked assemblies with preservative hydraulic fluid, Specification MIL-O-6083, Type I. Cap the ports of the unit and operate it through three or four cycles under no load and without tightening the packing gland nuts. Drain the corrosion-preventive fluid from the unit.

e. Fill new units with system hydraulic fluid and cap the ports. Do not operate under a load until the packing is well saturated with hydraulic fluid. Adjust the packing gland B-nut to the required torque (see paragraph 3-14, step h). If the unit contains a shaft, extend the shaft and apply hydraulic fluid with a clean cloth.

Note

It is not necessary to flush out the internal coating of corrosion-preventive oil with hydraulic fluid before installing a new unit in the system.

f. Replace the stop nuts when the fiber insert has deteriorated.

3-6. HYDRAULIC SYSTEM PACKINGS AND GASKETS.

3-7. There are various types of packings and gaskets used in the components of the hydraulic system to form seals between mating surfaces. Tinned copper and fiber gaskets are usually installed as seals between serrated surfaces. Install the packing as described in the following steps.

a. Use a dull spatula to manipulate a packing into position, but do not force the packing into place.

b. When installing packing over threads, cover the threads to prevent the packing from being scratched or cut.

3-8. HYDRAULIC PIPING.

3-9. Aluminum alloy is used for the rigid hydraulic fluid conducting pipes. Triple-type connections, consisting of the pipe, sleeve, and the BT-nut, provide a seal between pipe connections. The pipe is flared to join the male fitting, and the sleeve provides a bearing surface for the BT-nut. For information on tying of hydraulic piping and hoses, pipe identification, and pipe flaring dimensions, refer to Section II.

3-10. REMOVAL OF HYDRAULIC PIPING.

a. Relieve the hydraulic system pressure by operating the wing flaps and brakes.

b. Remove the BT-nuts at each end of the pipe. Remove the supporting clips and clamps and remove the pipe.

c. Cap the ends of the pipe immediately to prevent dust and grit from entering the hydraulic system. Do not use rubber plugs to seal pipe ends as the rubber can be shredded by the pipe threads and rubber particles will contaminate the system.

3-11. INSPECTION OF HYDRAULIC PIPING. Inspect the piping for dents and nicks. A dent no greater than 20 per cent of a pipe's diameter is not objectionable, unless it is located on the heel of a sharp bend radius. A nick no greater than 10 per cent of the wall thickness can be reworked by polishing, unless it is located on the heel of a sharp bend radius. Pipes damaged beyond these tolerances are considered unsafe and must be replaced.

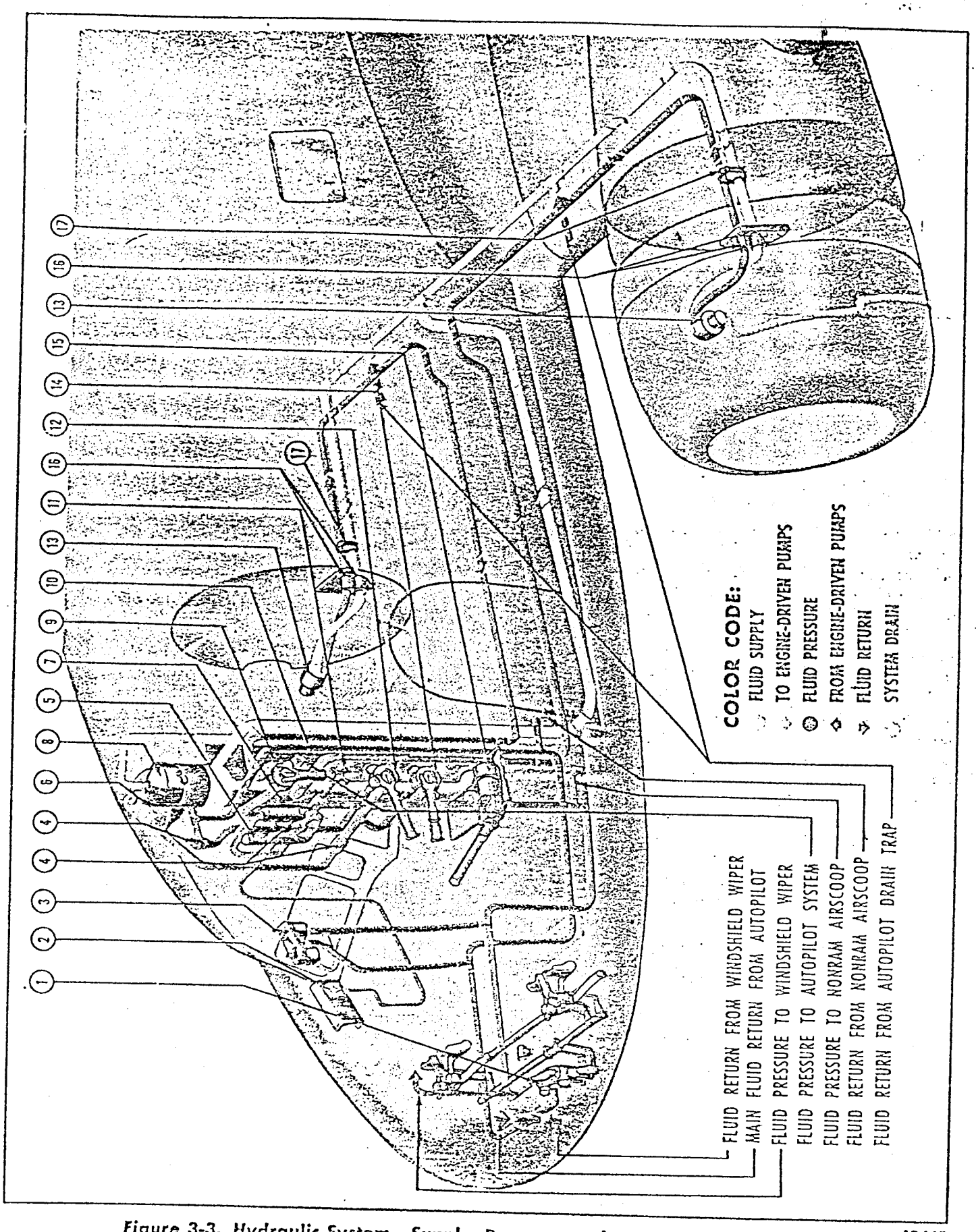

Figure 3-3. Hydraulic System—Supply, Pressure, and Return (C-47 Airplanes)

19,145

Key to Figure 3-4

Item	Nomenclature	Item	Nomenclature
1.	Brake Control Valve	10.	Engine-Driven Hydraulic Pump Selector Valve
2.	Hydraulic System Pressure Gage	11.	Hydraulic Control Panel
3.	Cowl Flap Control Valve Assembly	12.	Hand Pump-to-Pressure Accumulator Shutoff Valve
4.	Engine Blower Control	13.	Wing Flap Control Valve
5.	Check Valves	14.	Engine-Driven Hydraulic Pump
6.	Hydraulic System Pressure Relief Valve	15.	Landing Gear Control Valve
7.	Hydraulic System Pressure Relief Accumulator	16.	Hydraulic Hand Pump
8.	Hydraulic System Pressure Regulator	17.	Firewall Disconnect Valves
9.	Hydraulic System Fluid Reservoir	18.	Firewall Shutoff Valve

3-12. Inspect the fittings and flares for cracks, burrs, and any deformities. A burr on a flare can be polished off, but a crack or deformity on any flare or fitting is cause for rejection of the part. All hoses have a lengthwise white stripe, and when properly installed, the white stripe will be positioned straight with the run. Inspect the hoses for cuts, abrasions, and proper installation. A spiraled stripe indicates a twisted hose and, under pressure, the twisted hose will straighten out and shear off at the fitting. Small cuts and abrasions present on the outer cover will not make a hose unfit for service; however, a hose with a cut extending deeper than the outer cover must be discarded and replaced.

3-13. MINOR REPAIR OF HYDRAULIC PIPING. Rework nicks by polishing. Use a fine grade of emery cloth and oil but do not use sandpaper. Finish polishing the pipe with crocus cloth and oil.

3-14. INSTALLATION OF HYDRAULIC PIPING. General procedures for installing hydraulic pipes are outlined in the following steps.

a. Check the pipe flares with a magnifying glass for out-of-round areas and cracks.

b. Clean out the pipes with a blast of clean, dry air.

c. Lubricate straight threads of brass and steel fittings with hydraulic fluid only.

Note

Do not depend upon thread compound to seal a faulty joint. Properly fitted and installed threads and flares will result in leakproof joints. Do not apply thread compound forward of the first two threads, and under no circumstance apply any compound to female threads. Apply lubricant lightly to avoid fouling the pipe.

d. Lubricate pipe threads with lubricant, Specification VV-P-236.

e. Protect the piping from scratches by taping the edges of all structure cutouts and holes through which it will be passed during installation.

f. Do not bend a pipe by hand to a radius of less than six times the diameter of the pipe (three times the diameter for machine bending).

g. Do not draw the flare down to the fitting with the nut, as this will spin off the flare. Align the pipe flare squarely to the fitting so that it is possible to start the nut by hand.

h. Torque the BT- and B-nuts in accordance with tables 2-6 and 2-7 in section II.

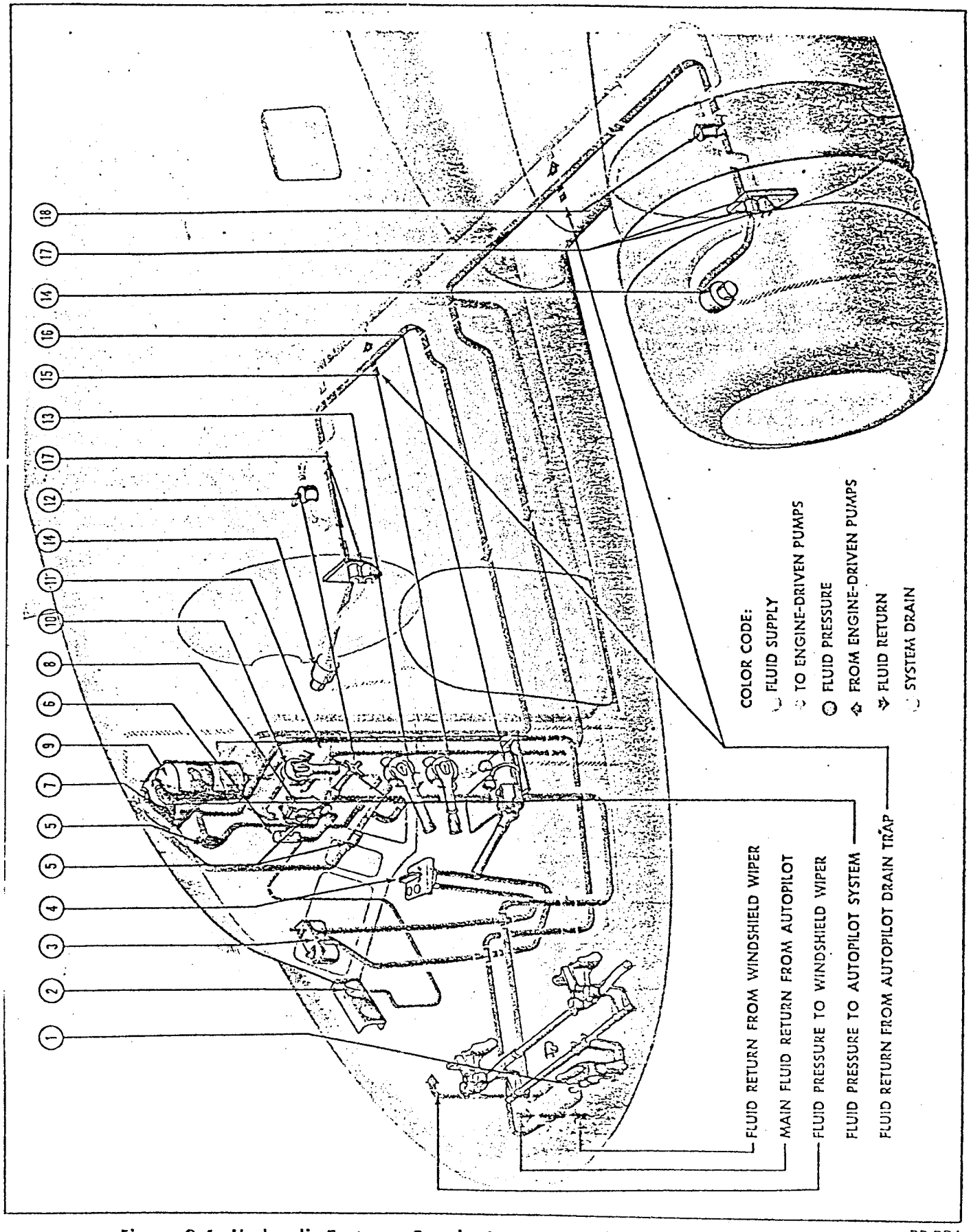

Figure 3-4. Hydraulic System—Supply, Pressure, and Return (C-117 Airplanes)

33,284

i. For new installations, refer to table 2-6 (pipe support spacing) in section II.

j. When installing hydraulic hose, do not bend the hose to a radius of less than six times the diameter of the hose (preferably, not less than nine times).

k. Do not twist the hydraulic hose during installation.

l. Allow slack in a hose equal to 5 to 8 per cent of the total length to compensate for shrinkage in operation.

m. Before assembling a unit with male pipe threads, tin the threads with solder, Federal Specification QQ-S-571, to prevent leakage at the fittings which screw into cast or machined bodies.

n. Blow out pipes and fittings with clean, dry air before installing.

o. Care must be taken when tightening the BT-nuts, as overtightening can cut off completely or severely damage the tube flare. A pipe can blow out if the BT-nut is not tightened sufficiently, therefore carefully observe the wrench torque values charts.

3-15. RELIEVING HYDRAULIC SYSTEM PRESSURE. In all cases where specific instructions are not given, operate the wing flaps to relieve the hydraulic system pressure to as low a point as possible, then operate the brakes slowly to relieve any remaining pressure.

3-16. TREATMENT OF HYDRAULIC SYSTEM DURING AIRPLANE STORAGE. During the time an airplane is in temporary storage, operate all systems at least once a week to prevent accumulation of sludge and rust in the system.

3-17. CLIPS AND CLAMPS.

3-18. The hydraulic pipes are fastened with bonded cushion clips and clamps. It is possible for moisture to condense or otherwise reach the bonding material with attendant corrosive action and high electrical resistance. Periodically remove a few clips and clamps and inspect for corrosion. If corrosion is found, make a thorough inspection and where necessary remove the affected clip or clamp, clean the corrosion from the piping, and install a new clip or clamp.

3-19. TEST OF HYDRAULIC SYSTEM. Test the hydraulic system as outlined in table 3-2. Refer to figure 3-5 for test connections.

Note

After completion of the tests, replace the lockwire on the hand pump-to-pressure accumulator shutoff valve. Check that the pipe disconnected in test No. 1 has been connected again; that pipes 4 and 5 disconnected in test No. 3 have been connected again; and that the cap on the tee in the brake pipe, located in the nose section, has been replaced.

3-20. TROUBLE SHOOTING OF THE HYDRAULIC SYSTEM.

3-21. Trouble shooting of the hydraulic system is accomplished as outlined table 3-1.

TABLE 3-1
TROUBLE SHOOTING - HYDRAULIC SYSTEM

TROUBLE	PROBABLE CAUSE	REMEDY
ENGINE DRIVEN PUMPS IN OPERATION.		
Dead system.	Lack of fluid in reservoir.	Check fluid quantity.
	External leaks.	Visual inspection. Replace faulty part.
	Failure of engine pumps.	Apply hand pump pressure to system. If pressure registers on gage, pumps are faulty. Remove and replace pumps.

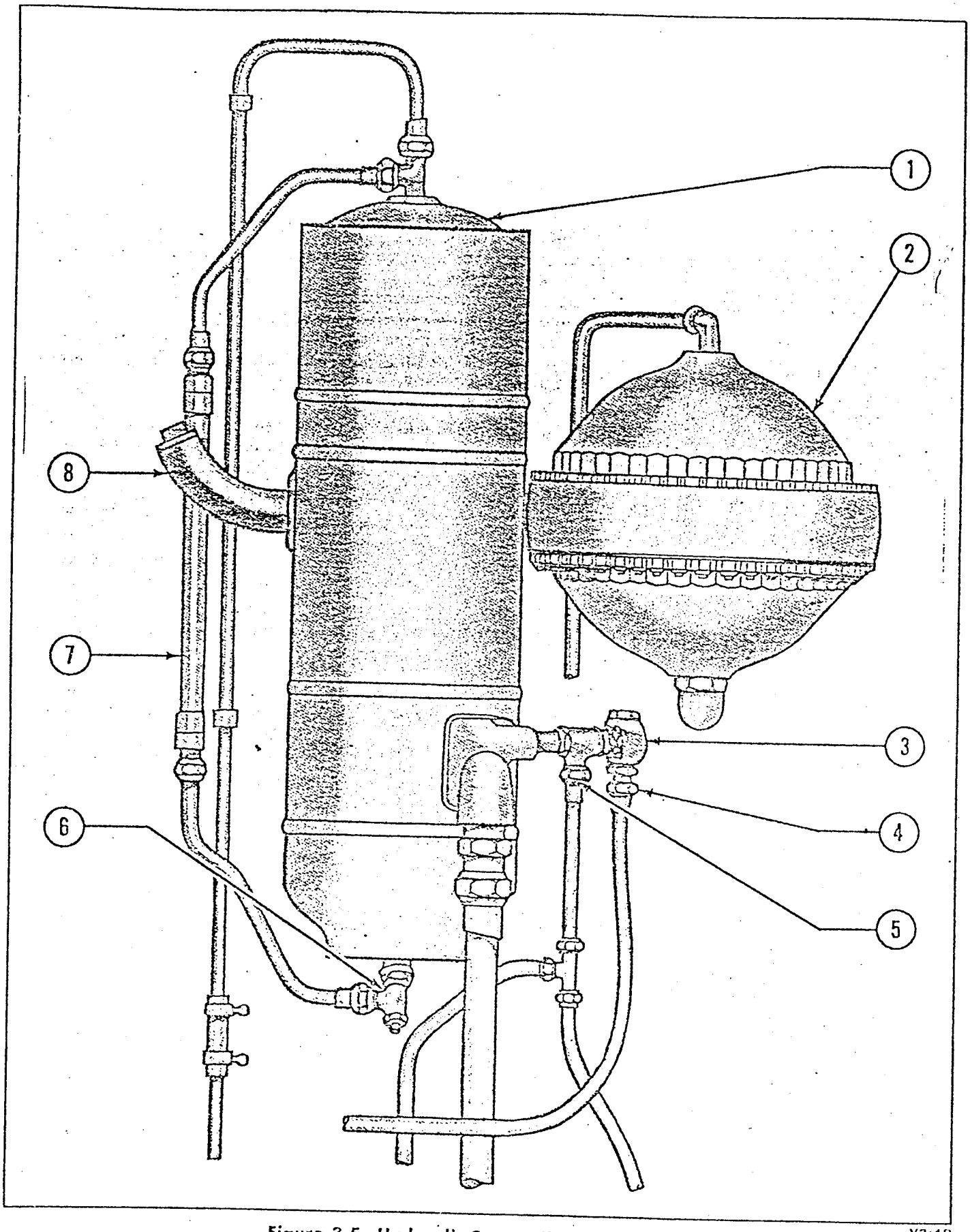

Figure 3-5. Hydraulic System Test Connections

V2-49

Key to Figure 3-5

Item	Nomenclature	Item	Nomenclature
1.	Reservoir	5.	Test Connection
2.	Accumulator	6.	Reservoir Drain
3.	Check Valve	7.	Fluid Level Gage
4.	Test Connection	8.	Filler Neck

TABLE 3-1 (Continued)

TROUBLE	PROBABLE CAUSE	REMEDY
ENGINE DRIVEN PUMPS IN OPERATION. *(Continued)*		
System pressure gage needle remains at zero, or indicates slight pressure rise when engines are started.	Loss of hydraulic fluid cuts off supply of fluid to engine-driven pumps.	Refill reservoir to proper level.
	Inoperative engine-driven pump.	Move handle on engine selector valve to forward position. If pressure now rises normally, straighten twisted hoses, tighten loose suction pipe or hose connections, and check for air leaks. Bleed air from supply pipes.
	Pressure regulator locked in unloading position.	Replace hydraulic regulator.
	Loose hose or pipe connection bleeding air into pump supply pipe.	Straighten twisted hoses. Tighten loose suction pipe or hose connections and check for air leaks. Bleed air from supply pipes.
	Break in pipe in pressure system.	Check for external hydraulic leaks and repair. If trouble persists, replace faulty engine pump.
No hydraulic units in operation, system pressure gage indication rises to and remains at 1000 psi, and system relief valve chatters, relieving excess system pressure.	Pressure regulator fails to relieve load on engine-driven pumps at 875 psi.	Relieve system pressure and replace pressure regulator.
No hydraulic units in operation, the system pressure gage indication does not rise to 875 psi when engine pump selector valve engages either pump.	Defective engine selector valve, or improper handle timing on valve, allows pressure to leak to autopilot system.	Check handle timing. Relieve pressure and tighten plug on plug-type valves. If trouble recurs, replace valve.
	Pressure regulator not adjusted properly.	Adjust pressure regulator valve to 875 psi kickout pressure.

TABLE 3-1 (Continued)

TROUBLE	PROBABLE CAUSE	REMEDY
ENGINE DRIVEN PUMPS IN OPERATION. *(Continued)*		
No hydraulic units in operation, the pressure gage oscillates between approximately 875 psi and 650 to 725 psi.	Improper air charge in accumulator, or damaged accumulator diaphragm.	Test accumulator for damaged diaphragm and proper air charge. Test for fluid leaks at accumulator air valve. Relieve hydraulic pressure and charge accumulator to 250 psi. Replace accumulator if necessary.
	External or internal leak in pressure system.	Check for external leaks. Put all valves in closed or neutral position. If trouble stops, replace packing in faulty hydraulic actuator. If trouble still exists, replace pressure regulator bypass check valve when Douglas regulator is installed, or replace pressure regulator when Bendix regulator is installed.
No hydraulic units in operation, the pressure regulator chatters.	Pressure regulator bypass check valve leaks.	Relieve system pressure and replace pressure regulator bypass pipe check valve or Bendix-type regulator.
No hydraulic units in operation, and the Bendix-type regulator chatters or pressure oscillates between 875 psi and some pressure above 750 psi.	Internal leak in Bendix-type regulator.	Replace Bendix-type regulator.
With any hydraulic unit in operation, pressure indicator falls below 650 psi before pressure regulator reengages engine-driven pump fluid delivery. Normal pressure dropping range is 650 to 725 psi, except during operation of landing gear or wing flaps when pressure may drop below 650 psi.	Pressure regulator not operating properly and fails to reengage engine driven pump fluid delivery at 650 psi.	Relieve system pressure and replace pressure regulator.
With any hydraulic unit in operation, the system pressure drops rapidly very low and rises very fast to approximately 875 psi at end of actuation period. Cylinder action delayed.	Improper air pressure in accumulator, or damaged accumulator diaphragm affords no cushion to system operation.	Test accumulator for damaged diaphragm and proper air pressure. Test for fluid leaks at accumulator air valve. If air pressure is below 250 psi, relieve hydraulic pressure and charge accumulator

TABLE 3-1 (Continued)

TROUBLE	PROBABLE CAUSE	REMEDY
ENGINE DRIVEN PUMPS IN OPERATION. *(Continued)*		
		to 250 psi. Replace diaphragm or accumulator as necessary.
With any hydraulic unit in operation, the system fluid pressure is utilized and system pressure gage indication falls to zero and remains there.	See the second trouble (System pressure gage needle remains at zero, etc) under ENGINE DRIVEN PUMPS IN OPERATION.	See the second trouble (System pressure gage needle remains at zero, etc) under ENGINE DRIVEN PUMPS IN OPERATION.
Fluid level in reservoir sight gage rises above normal flight level and hydraulic fluid overflows through vent pipe.	Reservoir strainer clogged.	Relieve system pressure. Remove reservoir and clean strainer. Install and refill reservoir.
Fluid level falls out of sight in gage glass with engine pumps running.	Loss of oil or normal incorrect gage reading due to whirling vortex of fluid in tank.	With engines stopped, check the fluid level as specified on placard on hydraulic panel. Refill reservoir if necessary and check system for external leaks.
Wing flaps go three-quarters down in excess of 112 mph.	Wing flaps relief valve adjustment has been changed by reduced packing friction in wing flap actuating cylinder, or by improper adjustment of relief valve.	Install pressure gage at wing flap relief valve, and with full system pressure check valve for proper relief pressure of 430 to 485 psi.
Wing flaps drop during flight when wing flaps control valve handle is in NEUTRAL position.	Defective wing flaps control valve, loose plug screw, or incorrect handle timing allows fluid pressure to leak into DOWN position.	Relieve system pressure and tighten plug screw on plug-type valves. Check handle timing on Saval-type valves. If trouble recurs, replace wing flaps control valve.
Landing gear pressure gage indicates different pressure than hydraulic system pressure gage with landing gear operating valve handle in DOWN position.	Damaged or defective landing gear pressure gage.	Relieve system pressure and replace landing gear pressure gage.
	Internal fluid leakage in landing gear actuating cylinders or compensating cylinder.	Relieve system pressure and replace packing in landing gear actuating cylinder or compensating cylinder.
Landing gear drops during flight with landing gear control valve in NEUTRAL position.	Defective landing gear control valve, loose plug screw or handle timing causing internal leakage in valve.	Relieve system pressure and tighten plug screw on plug-type valve. Check handle timing on Saval-type valves. If trouble recurs, replace landing gear control valve.

TABLE 3-1 (Continued)

TROUBLE	PROBABLE CAUSE	REMEDY
ENGINE DRIVEN PUMPS IN OPERATION. *(Continued)*		
	Internal fluid leakage in landing gear actuating cylinders or compensating cylinder.	Relieve system pressure and replace packing in landing gear actuating cylinders or compensating cylinder.
	External leakage at pipes, hoses, or fittings.	Check for external leaks and replace faulty parts.
Landing gear pressure gage indicates pressure in excess of 250 psi in 20 to 30 minutes (normal thermal expansion) after landing gear control valve handle has been moved to UP position and returned to NEUTRAL position.	Handle moved too slow.	Move handle quickly when operating valve.
	Defective landing gear control valve, loose plug screw, or incorrect timing allows fluid pressure to leak into DOWN pipe.	Relieve system pressure and tighten plug screw on plug-type valves. Check handle timing on Saval-type valves. If trouble recurs, replace landing gear control valve.
HAND PUMP OPERATING.		
No pressure or any resistance on any stroke.	Complete loss of hydraulic fluid, or open pipe in system.	Repair leaking pipes and fittings and refill reservoir.
No pressure rise on down stroke.	Defective check valve in hand pump supply port.	Relieve system pressure and replace defective check valves or packings.
No pressure rise on up stroke.	Defective check valve in hand pump piston, or defective packing.	Relieve system pressure and replace defective check valve or packings.
System pressure gage indicates no pressure rise.	Hand pump shutoff valve bleed hole clogged.	Relieve system pressure and clean bleed hole in hand pump shutoff valve plug.
System pressure gage indicates full system pressure being developed by operation of hand pump.	Defective system check valve between hand pump shutoff valve and pressure accumulator.	Relieve system pressure and replace system check valve.
NO PUMPS OPERATING.		
System pressure gage indication before sudden drop to zero is more or less than 250 psi.	Pressure accumulator diaphragm is damaged.	Test for fluid leaks at accumulator air valve. Replace damaged accumulator diaphragm.
	Pressure accumulator has improper air charge.	Relieve all hydraulic pressure and charge pressure accumulator to correct air pressure of 250 psi.

TABLE 3-1 (Continued)

TROUBLE	PROBABLE CAUSE	REMEDY
	NO PUMPS OPERATING. *(Continued)*	
System pressure gage indicates pressure up to 1000 psi maximum pressure in system because of system relief valve. Landing gear pressure gage indicating in excess of 1000 psi and fluid pressure in excess of 2000 psi will damage the landing gear pressure gage.	Landing gear control valve handle in NEUTRAL position, or landing gear control valve handle in DOWN position, and bleed hole in hand pump shutoff valve is clogged.	Place landing gear control valve handle in DOWN position. If landing gear pressure gage indicates no relief of excess pressure, open hand pump shutoff valve. Relieve system pressure and clean bleed holes in pump shutoff valve.
Pressure in excess of 1000 psi indicated on both gages.	System relief valve inoperative.	Replace system relief valve.

TABLE 3-2
TEST - HYDRAULIC SYSTEM

	Points of Attachment for Test Stand Piping				*Valve Positions*										
	Test Stand Pressure Pipe	*Test Stand Return Pipe*	*Pipin Disco nect*	*Piping Plugs*	*Engine Selector*	*Gyro Pilot Shutoff*	*Hand Pump-to-Pressure Accumulator Shutoff*	*Wing Flap*	*Landing Gear*	*Cowl Flap LH*	*Cowl Flap RH*	*Check*	*Pressure (Psi)*	*Maximum Leakage*	*Remarks*
Test No. 1	LH pump pressure fitting on firewall.	LH pump suction fitting on firewall.	Retur pipe from regulator.	Disconnected pipe and port in regulator. All cowl flap fittings on firewalls.	LH to hydraulic system.	Off	On (remove lockwire).	Neutral	Neutral	Trail	Trail	LH engine pressurepipe.	875 (±25)	None	
Test No. 2	RH pump pressure fitting on firewall.	RH pump suction fitting on firewall.	Return pipe from regulator.	Disconnected pipe and port in regulator. All cowl flap fittings on firewalls.	RH to hydraulic system.	Off	On (remove lockwire).	Neutral	Neutral	Trail	Trail	RH engine pressurepipe.	875 (±25)	None	
Test No. 3	RH pump pressure fitting on firewall.	RH pump suction fitting on firewall.	Connect to piping above. Disconnect piping 4 and 5 and connect them to a common manifold *(see figure 3-5)*.	All cowl flap fittings on firewalls.	LH to hydraulic system.	Off	On (remove lockwire).	Neutral	Neutral	Trail	Trail	All return piping.	100 (±10)	None	
Test No. 4	RH pump pressure fitting on firewall.	RH pump suction fitting on firewall.	Connect piping 4 and 5.	All cowl flap fittings on firewalls.	RH to hydraulic system.	Off	On (remove lockwire).	Neutral	Neutral	Trail	Trail	Regulator kick-off.	875 (±25)		
Test No. 5	RH pump pressure fitting on firewall.	RH pump suction fitting on firewall.	Connect piping 4 and 5.	All cowl flap fittings on firewalls.	RH to hydraulic system.	Off	On (remove lockwire).	Operate to make regulator kick-in.	Neutral	Trail	Trail	Regulator kick-in.	600 Min		
Test No. 6	RH pump pressure fitting on firewall.	RH pump suction fitting on firewall.	Connect piping 4 and 5.	All cowl flap fittings on firewalls.	RH to hydraulic system.	Off	On (remove lockwire).	Neutral	Neutral	Trail	Trail	System relief valve.	1000 (±50)		

TABLE 3-2 (Continued)

	Points of Attachment for Test Stand Piping				Valve Positions										
	Test Stand Pressure Pipe	Test Stand Return Pipe	Piping Discon-nected	Piping Plugged	Engine Selector	Gyro Pilot Shutoff	Hand Pump-to-Pressure Accumu-lator Shutoff	Wing Flap	Land-ing Gear	Cowl Flap LH	Cowl Flap RH	Ch	Pres-sure (Psi)	Maxi-mum Leak-age	Remarks
Test No. 7	Tee in brake in nose pipe.	RH pump suction fitting on fire-wall.	Connect piping 4 and 5.	All cowl flap fittings on firewalls.	RH to hydraulic system.	Off	On (remove lockwire).	Neutral	Neutral	Trail	Trail	Brake pi and co	825 (±25)	None	Open brake valve to allow 825 psi pressure in brake piping.
Test No. 8	Tee in brake in nose pipe.	RH pump suction fitting on fire-wall.	Connect piping 4 and 5.	All cowl flap fittings on firewalls.	RH to hydraulic system.	Off	On (remove lockwire).	Up	Down	Trail	Trail	All wing piping and nectio gr down and con	1000 (±50)	None	
Test No. 9	Tee in brake in nose pipe.	RH pump suction fitting on fire-wall.	Connect piping 4 and 5.	All cowl flap fittings on firewalls.	RH to hydraulic system.	Off	On (remove lockwire).	Same	Up	Trail	Trail	All ld; g piping an conne io	1000 (±50)	None	
Test No. 10	Tee in brake in nose pipe.	RH pump suction fitting on fire-wall.	Connect piping 4 and 5.	All cowl flap fittings on firewalls.	RH to hydraulic system.	Off	On (remove lockwire).	Down†	Up	Trail	Trail	All wing down ip and con	000 (±50)	None	† If necessary, maintain pres-sure by constant pumping.
Test No. 11	Both cowl flap pipes in RH nacelle.	RH pump suction fitting on fire-wall.	Connect piping 4 and 5.	Tee in brake pipe.	RH to hydraulic system.	Off	Off	Neutral	Neutral	Off	C	All RH co piping an conne io	1200 (±50)	None	
Test No. 12	Both cowl flap pipes in LH nacelle.	RH pump suction fitting on fire-wall.	Connect piping 4 and 5.	Tee in brake pipe.	RH to hydraulic system.	Off	Off	Neutral	Neutral	Off	C	All LH c flap pi conne io	1200 (±50)	None	

3-22. REMOVAL, DISASSEMBLY, ASSEMBLY, TESTING, AND INSTALLATION OF HYDRAULIC SYSTEM COMPONENTS. Removal, disassembly, assembly, testing, and installation of the hydraulic system components are accomplished as outlined in the following paragraphs.

3-23. HYDRAULIC CONTROL PANEL. *(See figures 3-6 and 3-7.)*

3-24. The hydraulic control panel is an assembly consisting of valves, fittings, and piping installed on the right side of the passageway aft of the co-pilot's seat. The panel is divided into a lower and an upper panel section. The lower section consists of the panel, engine pump selector valve, wing flap control valve, landing gear control valve, hydraulic hand pump, pressure regulator, system pressure relief valve, wing flap relief valve, hand pump-to-pressure accumulator shutoff valve, autopilot shutoff valve, check valves, piping, and fittings. The lower panel section is installed and can be removed as a single unit for testing the complete assembly. The upper panel section consists of the hydraulic reservoir fluid level sight gage, and a placard listing the filling instructions. The reservoir filler neck extends from the reservoir through an opening in the upper panel section adjacent to the sight gage.

3-25. REMOVAL OF HYDRAULIC CONTROL PANEL.

a. Relieve the hydraulic system pressure by operating the wing flaps.

b. Disconnect and cap the pipes connected to the major components of the lower panel section.

c. Remove the attaching bolts and remove the lower panel assembly.

3-26. TEST PROCEDURES FOR HYDRAULIC CONTROL PANEL. *(See figure 3-8.)* The test procedure for the hydraulic control panel is performed as outlined in table 3-3.

TABLE 3-3
TEST-HYDRAULIC CONTROL PANEL

Test Port	*Ports Plugged*	*Engine Pump Selector Valve*	*Hand Pump Shutoff Valve*	*Autopilot Shutoff*	*Wing Flap Control Valve*	*Landing Gear Control Valve*	*Test Pressure*	*Leakage*	*Flow*
A	D, E, H, F, J, K, and L.	LH engine to hydraulic system.	CLOSED	ON	DOWN	NEUTRAL	1150	None	
A	D, E, H, F, J, K, and L.	LH engine to hydraulic system.	CLOSED	ON	UP	NEUTRAL	1150	None	
A	NONE	LH engine to hydraulic system.	CLOSED	ON	UP	UP	80		Flow out of ports H and J.
A	NONE	LH engine to hydraulic system.	CLOSED	ON	DOWN	DOWN	80		Flow out of ports F and K.

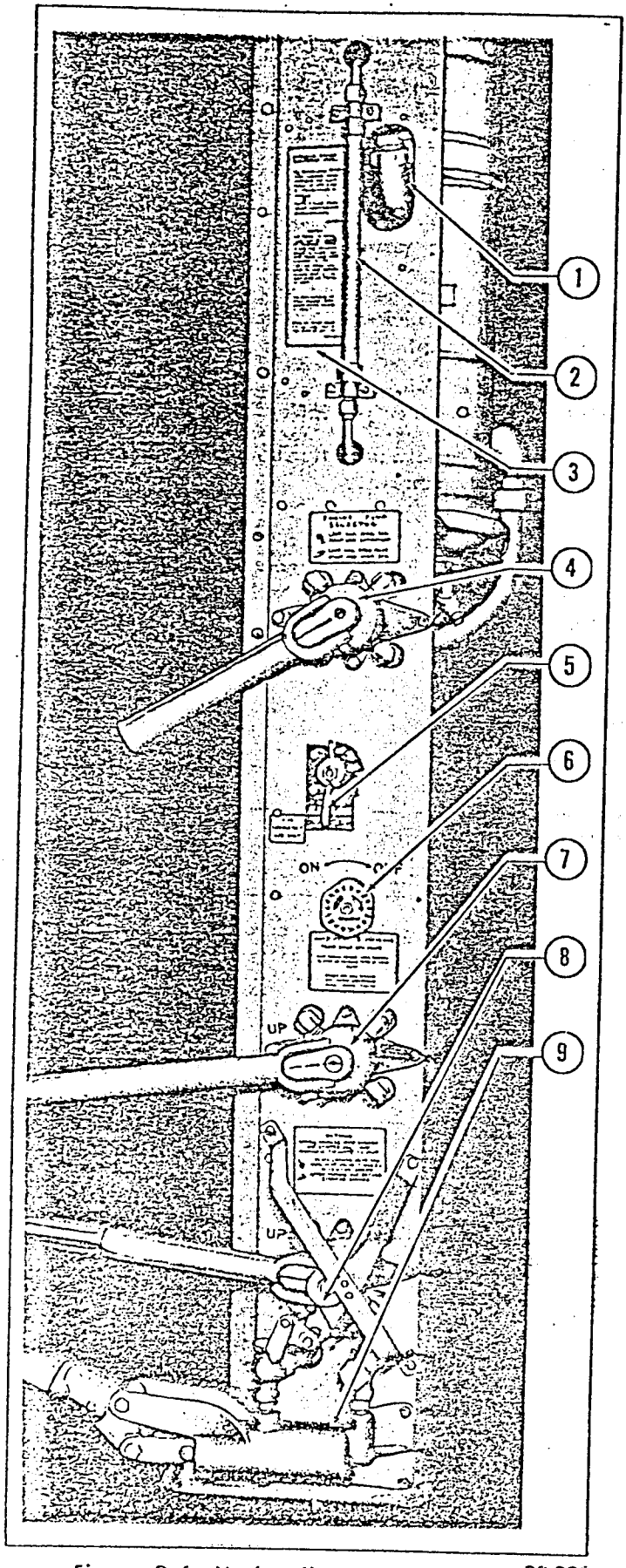

Figure 3-6. Hydraulic Control Panel — Front View 33,286

3-27. INSTALLATION OF HYDRAULIC CONTROL PANEL.

a. Position the control panel and secure with attaching bolts.

b. Connect the piping to the components.

3-28. ENGINE-DRIVEN HYDRAULIC PUMP SELECTOR VALVE.

(See figures 3-9 and 3-10.)

3-29. The engine-driven hydraulic pump selector valve, located on the lower hydraulic control panel directly below the hydraulic reservoir sight gage, controls the pressure flow of the hydraulic fluid from the engine-driven pumps to the hydraulic system. When the selector valve handle is placed in the normal position (aft), the left engine supplies fluid pressure to the main hydraulic system, and the right engine pump supplies fluid pressure for operating the autopilot. When the selector valve handle is moved to the alternate position (forward), the pressure fluid flow from the two engine pumps is reversed; the right engine pump supplies pressure to the main hydraulic system, while the left engine pump supplies pressure for operation of the autopilot. The control handles must be pulled out slightly before changing from the normal to alternate position. There is no difference in the function of the main hydraulic system and the autopilot when the alternate position of the engine pump selector valve is utilized.

3-30. If one hydraulic engine pump fails, the pump selector valve provides an emergency method of directing the flow of pressure fluid from the operating pump to the main hydraulic system, or to the autopilot system.

Key to Figure 3-6

Item	*Nomenclature*
1.	Hydraulic Fluid Reservoir Filler Neck
2.	Hydraulic Fluid Reservoir Fluid Level Sight Gage
3.	Hydraulic Fluid Reservoir Filling Instructions
4.	Engine Pump Selector Valve
5.	Autopilot Emergency Shutoff Valve
6.	Hand Pump-to-Pressure Accumulator Shutoff Valve
7.	Wing Flap Control Valve
8.	Landing Gear Control Valve
9.	Hydraulic Hand Pump

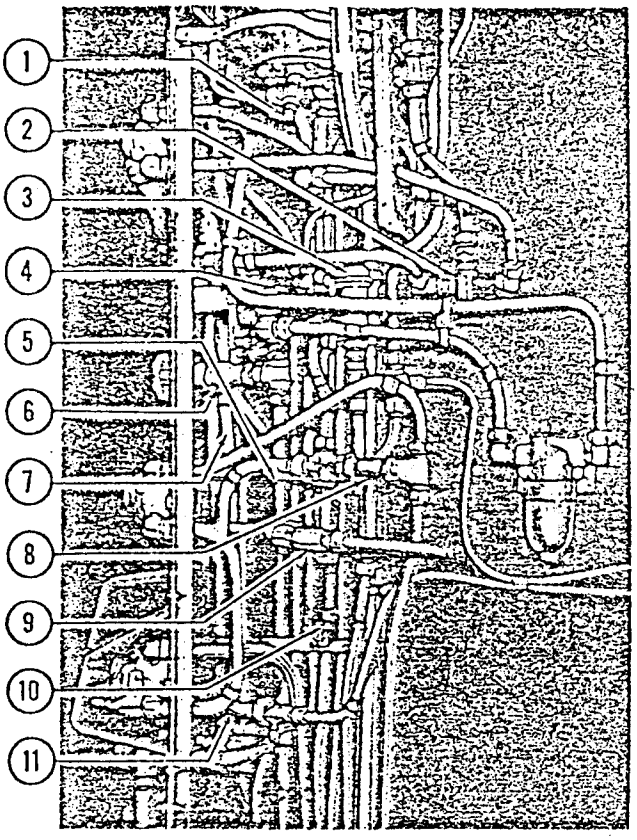

33,287

Figure 3-7. Hydraulic Control Panel—Rear View

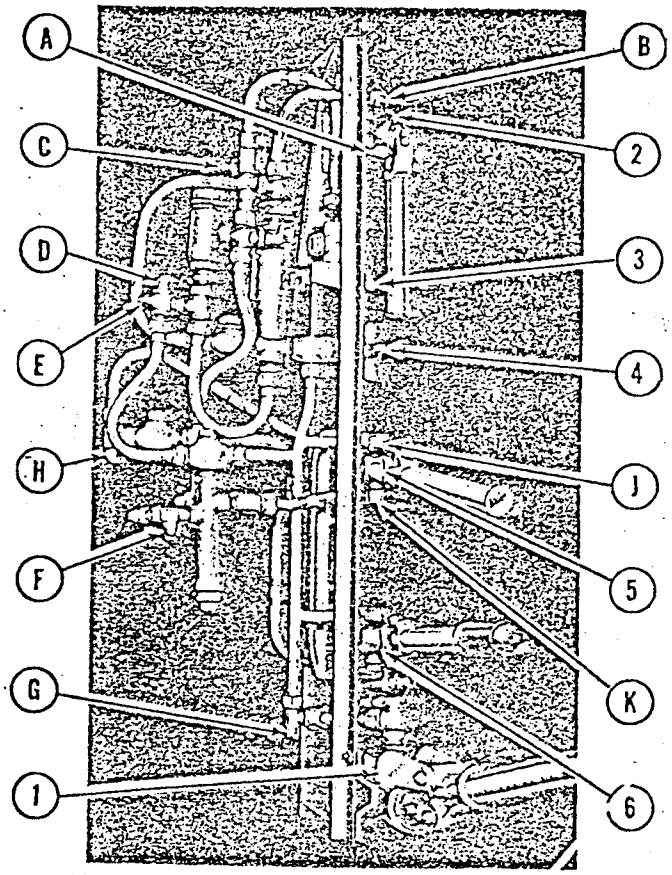

33,288

Figure 3-8. Hydraulic Control Panel Test Connections

Key to Figure 3-7

Item	Nomenclature
1.	Hydraulic Fluid Reservoir Drain Plug
2.	Autopilot Pressure Regulator
3.	Hydraulic System Pressure Relief Valve
4.	Hydraulic System Pressure Regulator
5.	Check Valve
6.	Hand Pump-to-Pressure Accumulator Shutoff Valve
7.	Pressure Manifold
8.	Check Valve
9.	Check Valve
10.	Wing Flap Relief Valve Assembly
11.	Return Manifold

Key to Figure 3-8

Item	Nomenclature
1.	Hydraulic Hand Pump
2.	Engine-Driven Pump Selector Valve
3.	Autopilot Emergency Shutoff Valve
4.	Hand Pump-to-Pressure Accumulator Shutoff Valve
5.	Wing Flap Control Valve
6.	Landing Gear Control Valve

Note: A, B, C, D, E, F, G, H, J, and K are test connections indicated in fluid leak test procedure.

3-31. REMOVAL OF ENGINE-DRIVEN HYDRAULIC PUMP SELECTOR VALVE.

a. Relieve the hydraulic system pressure by operating the wing flaps.

b. Disconnect the four hydraulic pipes from the valve and cap the pipes.

c. Remove the bolts attaching the pump selector valve to the hydraulic control panel and remove the valve.

3-32. DISASSEMBLY OF ENGINE-DRIVEN HYDRAULIC PUMP SELECTOR VALVE.

a. Remove the handle assembly.

b. Compress and remove the snap ring.

c. Remove the shaft, the O-ring, and the shaft retainer.

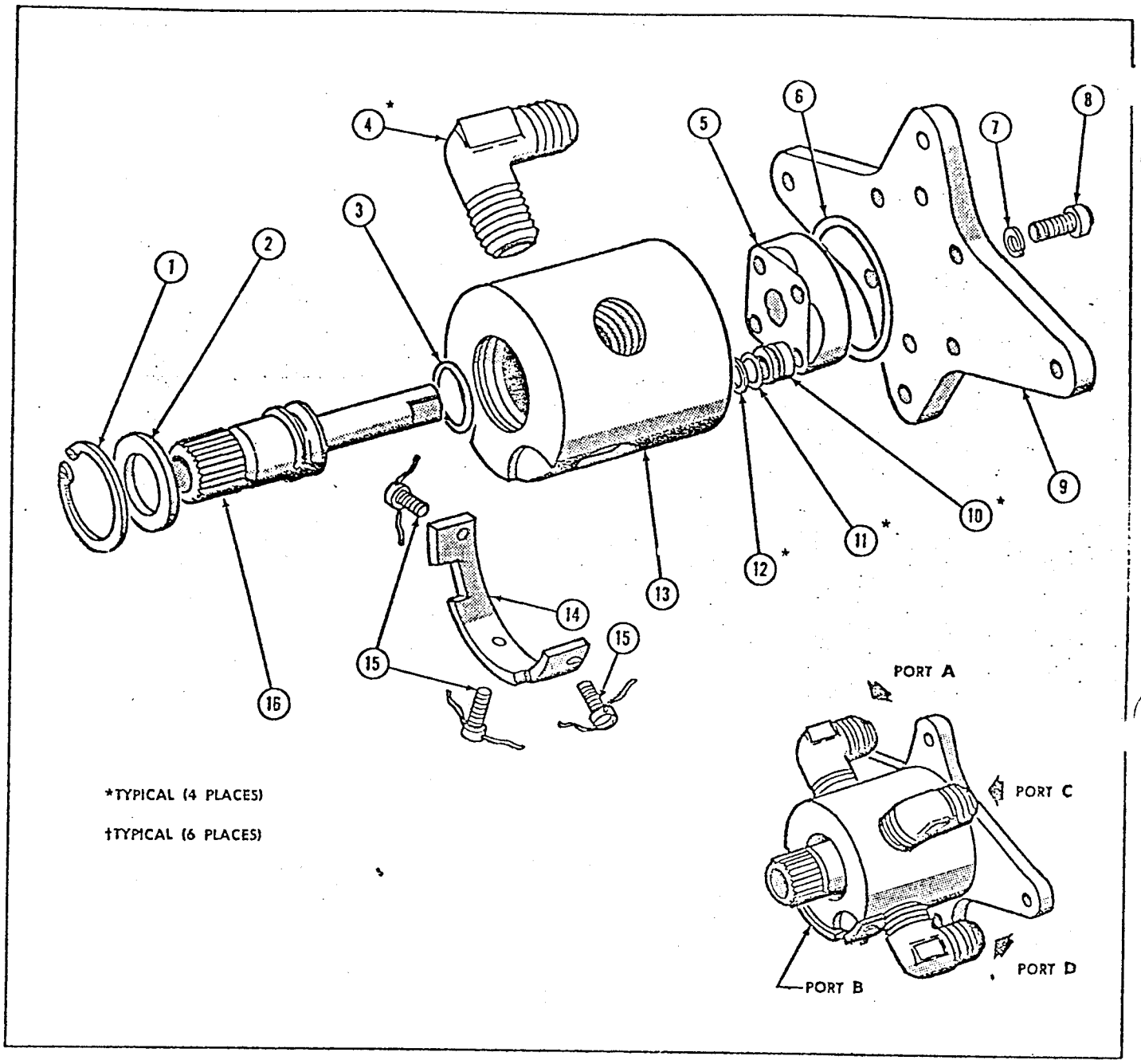

33,289

Figure 3-9. Engine-Driven Hydraulic Pump Selector Valve

Key to Figure 3-9

Item	*Nomenclature*	*Item*	*Nomenclature*
1.	Ring	9.	Plate
2.	Retainer	10.	Seat
3.	O-Ring	11.	O-Ring
4.	Elbow (typical 4 places)	12.	Washer
5.	Rotor	13.	Body
6.	O-Ring	14.	Quadrant
7.	Lockwasher	15.	Bolts
8.	Screw (typical 6 places)	16.	Shaft

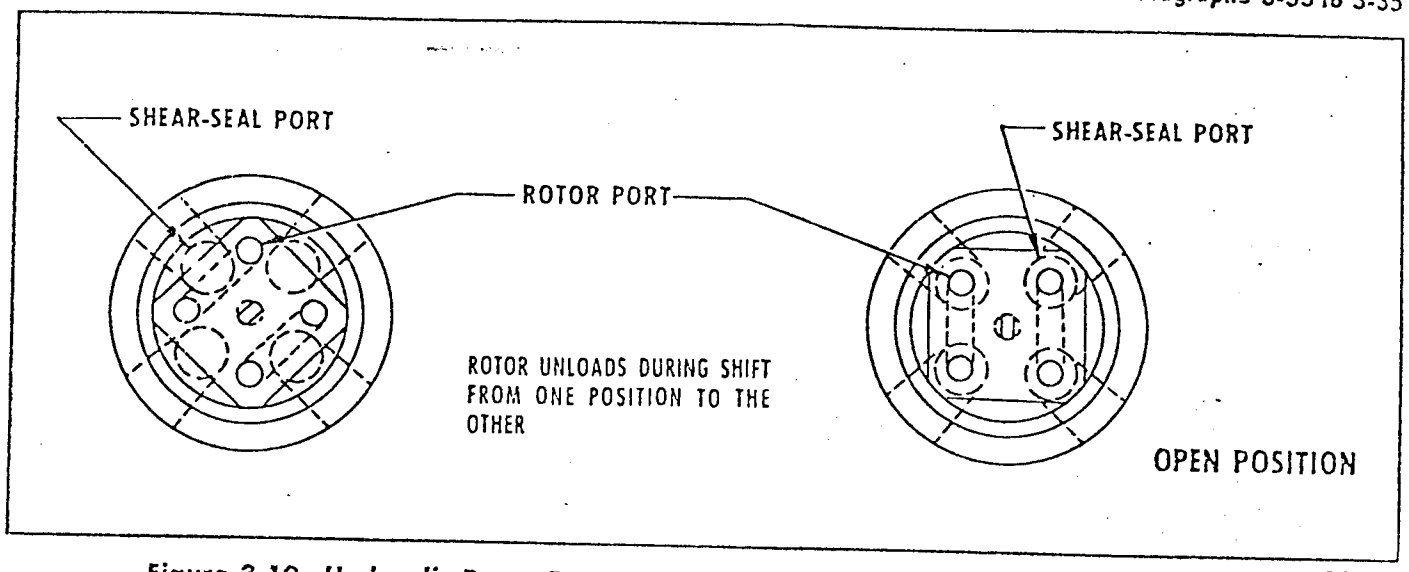

Figure 3-10. Hydraulic Pump Selector Valve Rotor (Late C-47 and C-117 Airplanes)

33,290

d. Remove the six screws and lockwashers from the base plate.

e. Remove the base plate. Hold the valve so that the shaft points down to prevent internal parts from falling out of the valve body.

f. Remove the large O-ring.

g. Remove the porting plate.

h. Remove the four shear seals with a hooked wire.

i. Remove the four spring washers.

3-33. MAINTENANCE OF ENGINE-DRIVEN HYDRAULIC PUMP SELECTOR VALVE.

a. Inspect the surface of all parts for nicks and scratches. Remove slight scratches with fine emery or crocus cloth.

b. Replace all damaged parts and O-rings.

c. Replace all shear seals when their overall height is 0.240 inch or less. Wear on the area contacting the porting plate must not exceed 0.015 inch in depth.

3-34. ASSEMBLY OF ENGINE-DRIVEN HYDRAULIC PUMP SELECTOR VALVE.

a. Install the shaft, inserting it carefully to prevent damage to the O-ring.

b. Insert the shaft retainer.

c. Install the snap ring.

d. Insert one spring washer in each of the 1/8-inch holes of the body.

e. Insert the four shear seals (chamfered ends out) with associated O-rings.

f. Install the porting plate over the milled end of the shaft with the recessed face of the porting plate flush with the base of the body.

g. Install the large O-ring.

h. Secure the plate in position with six screws and lockwashers.

3-35. ADJUSTMENT OF ENGINE-DRIVEN HYDRAULIC PUMP SELECTOR VALVE.

a. Timing of the hydraulic pump selector valve is accomplished as indicated in figure 3-11.

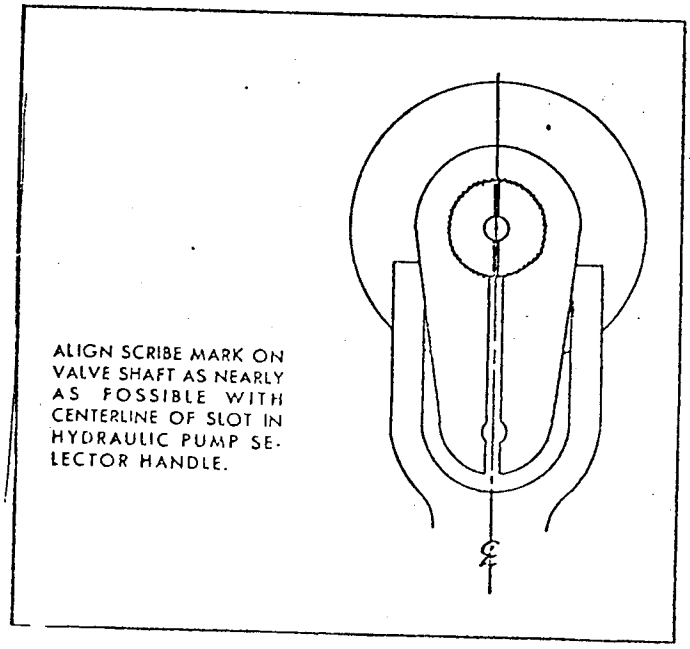

33,291

Figure 3-11. Timing Hydraulic Pump Selector Valve (Late C-47 and C-117 Airplanes)

Note

The centerline of the handle must coincide exactly with the index mark on the shaft to insure accurate positioning of the porting plate relative to the shear seals in order to prevent internal leakage.

b. The operational travel of the valve is 90 degrees. The valve incorporates spring loading of the shear seals in static condition, and hydraulic loading of the shear seals in operation. Valve handle load adjustment is not required.

CAUTION

Be sure that the handle of the valve is moved the full travel in operation. Stopping short of the full NEUTRAL or the full OPEN position allows unloading of the valve through the body.

3-36. TEST PROCEDURE FOR ENGINE-DRIVEN HYDRAULIC PUMP SELECTOR VALVE. The test procedure for the engine-driven hydraulic pump selector valve is performed as outlined in table 3-4.

TABLE 3-4
TEST- ENGINE-DRIVEN HYDRAULIC PUMP SELECTOR VALVE

To Test	*Apply Pressure at Port*	*Plug Port*	*Shaft Position*	*Test Pressure Psi*	*Remarks*
Port A shear seal	A	B	Neutral	25 (—4) Minimum	Check for leakage at port D. Allow 3 minutes for seating. Leakage after this period shall not exceed 1 drop in 3 minutes.
Ports A and B shear seals		C	45 degrees counterclockwise from neutral.	1500 (—4) Minimum	
Port C shear seal	C	A	Neutral	25 (—4) Minimum	Check for leakage at Port B. Allow 3 minutes for seating. Leaking after this period shall not exceed 1 drop in 3 minutes.
Ports C and D shear seals		D	45 degrees counterclockwise from neutral.		
Shaft and cover plate O-ring seals	C	A B D	45 degrees clockwise from neutral.	1000 (—3) Minimum	Check for external leakage at points 1 and 2. Allowable leakage is 2 drops in 12 hours at shaft. No other external leakage allowed.

Notes: a. Pressure drop from Port A to Port B, or from Port D to Port C should not exceed 50 psi at a flow of 3 gallons each minute.

b. Pressure applied at Port A (with Ports C and D plugged), or at Port D (with Ports A and B plugged), should not exceed 500 psi to maintain a flow of 3 gallons each minute with shaft in any position between detail A and 70 degrees counterclockwise.

3-37. INSTALLATION OF ENGINE-DRIVEN HYDRAULIC PUMP SELECTOR VALVE. Attach the hydraulic pump selector valve to the hydraulic control panel with the four bolts and lockwashers and connect the four hydraulic pipes to the valve.

3-38. HYDRAULIC SYSTEM PRESSURE ACCUMULATOR. *(See figure 3-12.)*

3-39. The hydraulic pressure accumulator is attached to a bracket located adjacent to the hydraulic fluid reservoir and aft of the bulkhead behind the co-pilot's seat. The lower chamber of the accumulator is charged with air, through the air valve fitting, to an initial pressure of 250 psi with no hydraulic fluid in the upper chamber and no pressure in the hydraulic system; the diaphragm is fully extended against the wall of the upper chamber. The accumulator is connected to the pressure pipe from the pressure regulator. When the hydraulic system pressure exceeds 250 psi, the hydraulic fluid forces the pressure accumulator diaphragm down, and the fluid flows into the upper chamber of the accumulator. When the hydraulic system pressure is 875 psi, the accumulator contains approximately 5 quarts of hydraulic fluid. The pres-

Key to Figure 3-12

Item	*Nomenclature*
1.	Stud Bolt
2.	Upper Dome
3.	Bolt
4.	Stop Plate
5.	Diaphragm
6.	Bolt
7.	Lower Dome
8.	Bushing
9.	Schrader Valve Assembly with either Schrader Valve Cap No. 2525 or Dill No. 637 and with either Schrader No. 2300 or Dill No. 302D Air Valve Core; or Dill Valve Assembly with either Schrader No. 2525 or Dill No. 637 Valve Cap and with either Dill No. 302D or Schrader No. 2300 Air Valve Core.
10.	Cap Nut

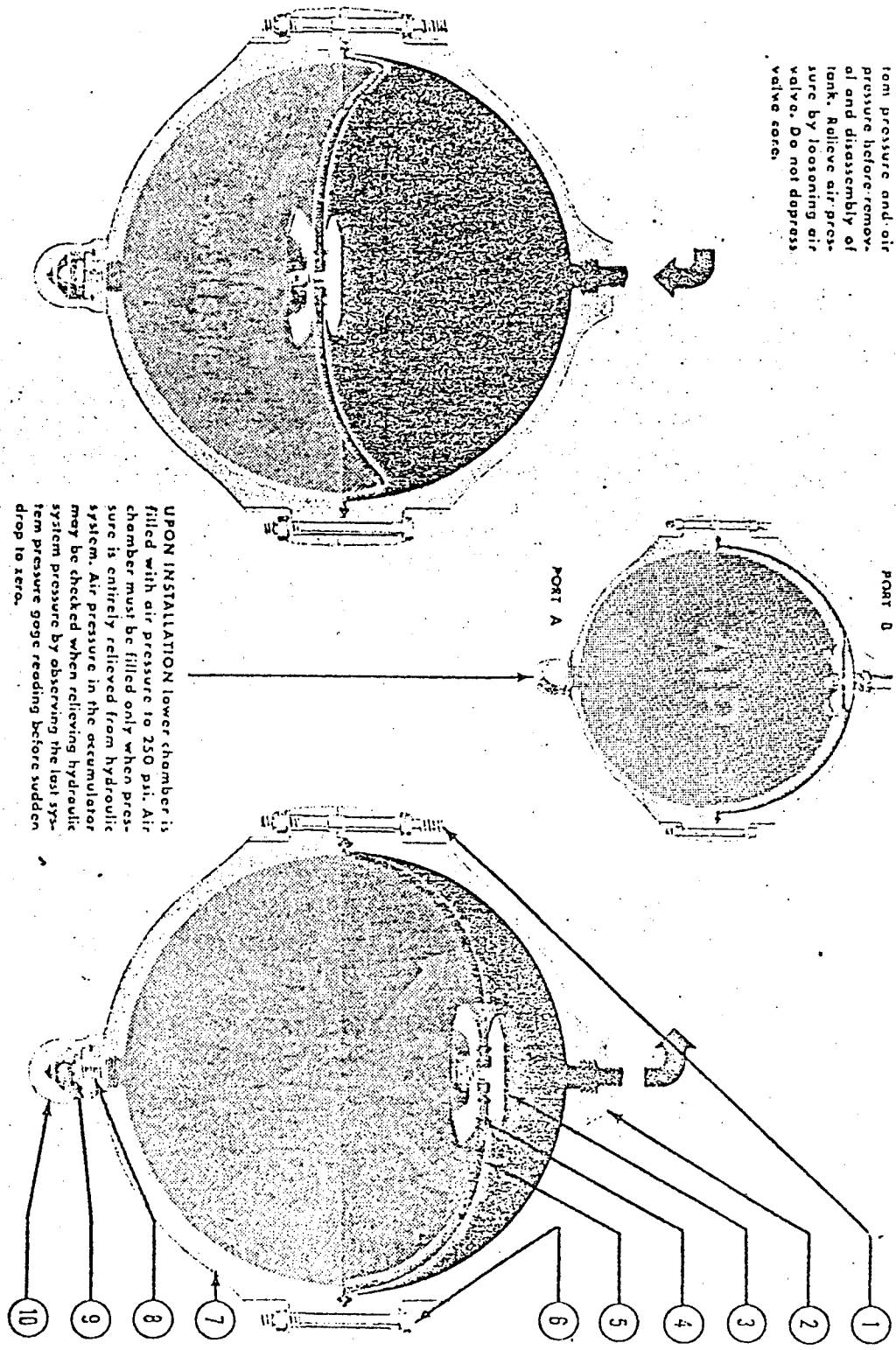

NOTE: Relieve hydraulic system pressure before removal and disassembly of tank. Relieve air pressure by loosening air valve. Do not depress valve core.

UPON INSTALLATION lower chamber is filled with air pressure to 250 psi. Air chamber must be filled only when pressure is entirely relieved from hydraulic system. Air pressure in the accumulator may be checked when relieving hydraulic system pressure by observing the last system pressure gage reading before sudden drop to zero.

FLUID CHARGING OPERATION

As engine-driven pump increases system pressure above 250 psi, fluid enters upper chamber and forces diaphragm downward compressing air in lower chamber to an equal pressure. At regulated system pressure of 875 psi, hydraulic fluid occupies approximately three-fourths of the volume in the accumulator.

COLOR CODE:

AIR

HYDRAULIC FLUID

EXPELLING FLUID OPERATION

When a control valve employs system pressure to operate an actuating cylinder, system pressure drops relieving pressure of fluid in upper chamber on compressed air in lower chamber. Expanding air instantly forces fluid into the hydraulic system to the cylinder in operation. When cylinder completes operation, accumulator is automatically recharged by the engine pump.

Figure 3-12. Hydraulic System Pressure Accumulator

33,292

sure accumulator stores energy so that a supply of hydraulic fluid under pressure is available when the engine pumps are inoperative, and/or when fluid is drawn from the pressure system faster than the engine pump can replenish the fluid supply. For example, when the main landing gear is extended, the weight of the landing gear and the airload on the landing gear cause it to drop rapidly. Without the accumulator, the fluid delivery from the engine pump would not equal the amount of fluid required by the landing gear actuating cylinder and a vacuum would be created in the hydraulic system. The accumulator prevents this condition by an immediate discharge of fluid under pressure into the hydraulic system when the system operating pressure decreases. When the landing gear has been extended, fluid is returned to the accumulator by the engine pump. The accumulator also serves as a shock absorber to dampen surges in the hydraulic system.

3-40. REMOVAL OF HYDRAULIC SYSTEM PRESSURE ACCUMULATOR.

a. Relieve the hydraulic system pressure by operating the wing flaps.

b. Relieve the air pressure in the pressure accumulator by backing off the air valve body sufficiently to allow the air pressure to escape slowly. DO NOT depress the valve core to release the air pressure.

c. Disconnect and cap the pipe attached to the accumulator.

d. Remove the three nuts attaching the accumulator to the supporting bracket and remove the accumulator.

3-41. DISASSEMBLY OF HYDRAULIC SYSTEM PRESSURE ACCUMULATOR.

CAUTION

Before starting the disassembly, be certain that all air pressure has been released from the accumulator.

a. Remove the bolts and the studs securing the accumulator housing.

b. Remove the upper half of the housing and remove the diaphragm.

c. Remove the diaphragm stop plate and the bolt.

3-42. MAINTENANCE, REPAIR, OR REPLACEMENT OF HYDRAULIC PRESSURE ACCUMULATOR. Replace the accumulator if damaged or not functioning properly.

3-43. ASSEMBLY OF HYDRAULIC SYSTEM PRESSURE ACCUMULATOR.

a. Remove oil, grease, and dirt from all parts of the accumulator.

b. Tighten the nut on the diaphragm bolt to 12 to 15 inch-pounds.

c. Lubricate the rim groove with hydraulic fluid, Specification MIL-O-5606. Install the diaphragm and make certain that the rim of the diaphragm is seated properly in the groove in the accumulator.

d. Install the three stud mounting bolts first with the ¼-inch studs positioned at 90-degree intervals on the upper side of the accumulator. Install the remaining bolts, washers, and nuts. Obtain an accurate micrometer reading of each bolt with the nuts loose. Tighten the nuts evenly around the accumulator until the bolts have elongated 0.0065 (±0.001) inch.

Note

A torque wrench can be used to tighten the nuts if the wrench has been previously calibrated, by elongating several bolts.

3-44. TEST PROCEDURE FOR HYDRAULIC SYSTEM PRESSURE ACCUMULATOR. The test procedure for the hydraulic system pressure accumulator is performed as outlined in table 3-5.

TABLE 3-5
TEST-HYDRAULIC SYSTEM PRESSURE ACCUMULATOR

Test Sequence	*Test Port*	*Ports Plugged*	*Test Pressure*	*Maximum Leakage*	*Remarks*
1	B	See remarks	1500 psi oil pressure.	None	Back off air valve at A slightly to allow trapped air to escape.
2	A	None	50 (±30) psi air pressure.		Diaphragm stop plate assembly must not seat off center more than 0.25 inch. The vacuum at B must be relieved after relieving pressure at A.
3	A	None	450 psi air pressure.	None	Make this test with accumulator submerged in water.
4	B	None	450 psi initial air pressure at A. Apply 1500 psi oil pressure at B.	None	Make this test with accumulator submerged in water.

Key to Figure 3-13

Item	Nomenclature
1.	Bushing
2.	Gasket
3.	End
4.	Gasket
5.	Lockwire
6.	Shim
7.	Seat
8.	9/16-Inch Diameter Bright Steel Ball
9.	Piston
10.	Spring
11.	Housing
12.	Shim
13.	Nut
14.	Spacer
15.	Packing
16.	Spacer
17.	Spring
18.	Orifice Snubber

3-45. INSTALLATION OF HYDRAULIC SYSTEM PRESSURE ACCUMULATOR.

a. Position the accumulator and secure it to the supporting brackets with three nuts.

b. Connect the pipe to the accumulator.

3-46. HYDRAULIC SYSTEM PRESSURE REGULATOR (C-47 AND EARLY C-47B AIRPLANES).

(See figure 3-13.)

3-47. The hydraulic pressure regulator, located on the outboard side of the hydraulic control panel, maintains the system operating pressure between 600 and 875 psi. The regulator consists of a cylindrical housing enclosing a spring-loaded piston and ball check. When no pressure exists in the hydraulic system, the piston is held down by the spring, and the ball check is seated. Fluid from the engine-driven pump flows through the bypass pipe and check valve to the bottom of the regulator and into the system, increasing the system pressure. The increasing system pressure acts on the inside of the pressure regulator piston which is held down by the spring. When the system pressure increases to 875 psi, fluid pressure on the inside of the regulator piston overcomes the force exerted by the spring and the piston moves up, unseating the valve. When the ball check is unseated, the fluid flows into the piston chamber and out the side port of the regulator to the reservoir. Since there is no resistance to flow when the ball check is unseated, the load on the engine pump is relieved. The check valve at the bottom of the regulator prevents any reverse

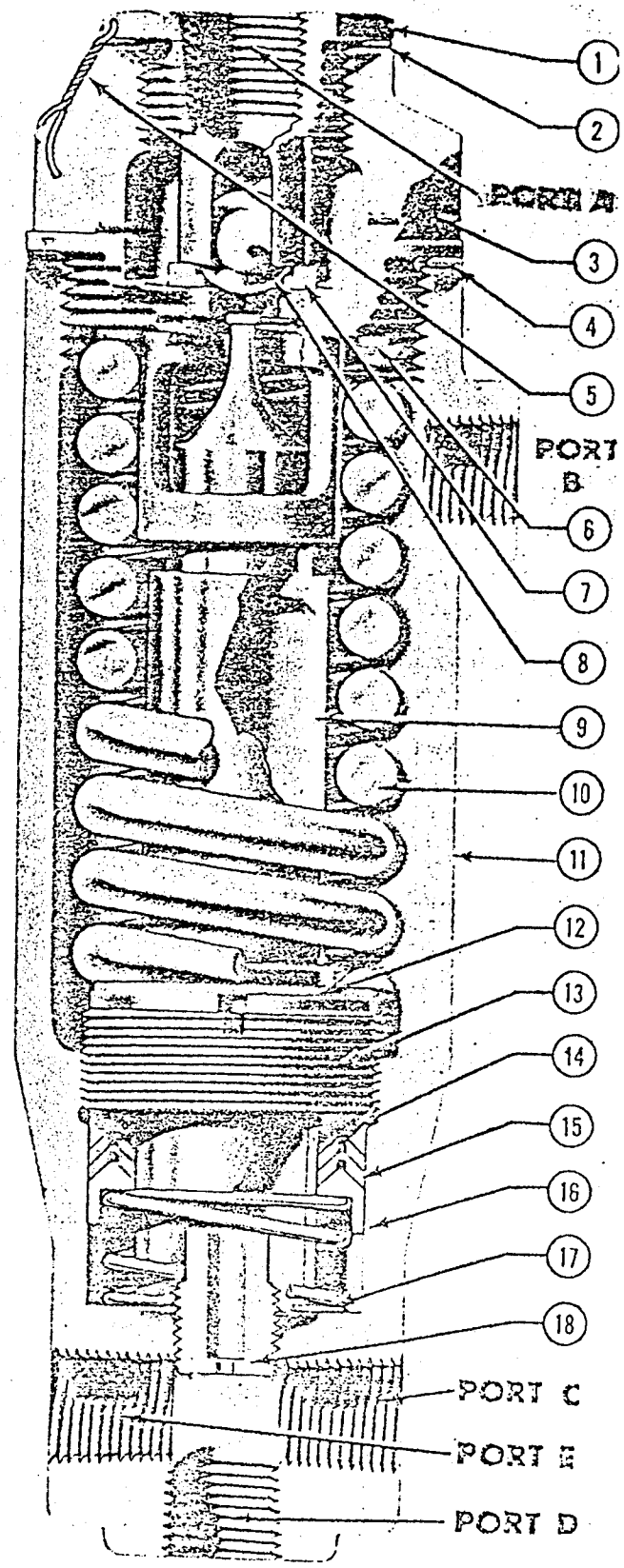

33,293

Figure 3-13. Hydraulic System Pressure Regulator Assembly (Early Airplanes)

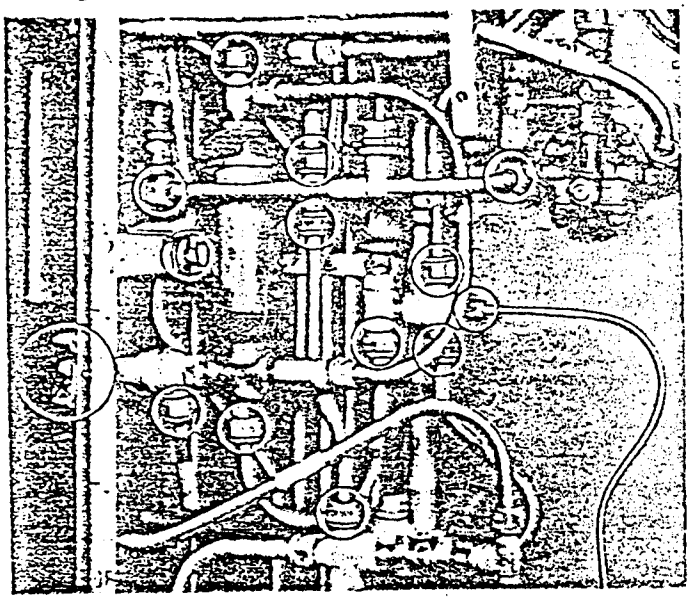

33,294

Figure 3-14. Removal of Hydraulic Pressure Regulator (Early Airplanes)

flow from the accumulator and the maximum system operating pressure of 875 psi is maintained. When fluid pressure is utilized to operate any of the hydraulic units, the system pressure decreases. When the system pressure decreases to 600 psi, the spring force overcomes the fluid pressure exerted on the inside of the piston. The piston moves down and the ball check is reseated, closing the passage to the piston chamber and the return pipe to the reservoir. The fluid then flows through the bypass pipe and check valve, increasing the system pressure to 875 psi, completing the pressure regulating cycle.

3-48. REMOVAL OF HYDRAULIC SYSTEM PRESSURE REGULATOR (C-47 AND EARLY C-47B AIRPLANES).

a. Relieve the hydraulic system pressure by operating the wing flaps.

b. Mark all pipes and fittings as removed, to facilitate reinstallation.

c. Remove the handle from the hydraulic hand pump-to-pressure accumulator shutoff valve.

d. Disconnect and cap all pipes at the connections indicated in figure 3-14.

e. Remove the two nuts attaching the regulator to the hydraulic control panel and remove the regulator.

3-49. DISASSEMBLY OF HYDRAULIC SYSTEM PRESSURE REGULATOR (C-47 AND EARLY C-47B AIRPLANES).

(See figure 3-13.)

a. Remove the valves and fittings from the regulator *(see figure 3-15)*.

b. Cut and remove the safetywire from the top end of the regulator.

WARNING

Because of the high spring tension on the end, hold the pressure regulator in an arbor press while unscrewing the end. Serious injury to personnel will result if this precaution is not observed.

c. Bolt the pressure regulator to an arbor press as shown in figure 3-16. Install a cap in the fitting in the top of the regulator before using the press.

d. Remove the top end of the regulator as shown in figure 3-16. Several spacing shims are installed on the

Key to Figure 3-15

Item	*Nomenclature*
1.	Hand Pump to Pressure Accumulator Shutoff Valve (handle removed)
2.	Hydraulic Pressure Regulator
3.	Tee
4.	Check Valve
5.	Cross
6.	Hydraulic System Pressure Relief Valve
7.	Pressure Pipe
8.	Tee
9.	Cross

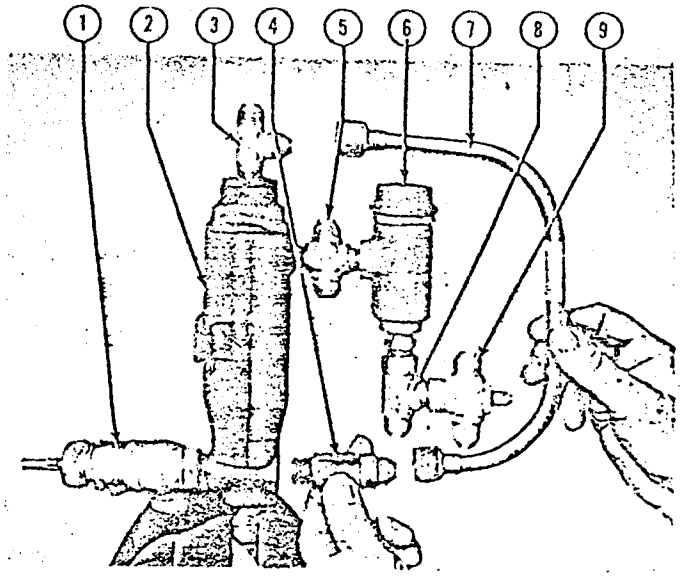

33,295

Figure 3-15. Hydraulic Pressure Regulator and Fittings (C-47 and Early C-47B Airplanes)

top or bottom of the large spring in the regulator. Count the number of shims for the adjustment of the regulator during reassembly.

e. Remove the spacing shims, large spring, and the piston.

f. Remove the packing nut.

g. Remove the ring, packing, backup ring, and small spring with service tool, Douglas No. K21201 *(see figure 3-17)*.

h. Unscrew the bushing from the top of the regulator and remove the ball check. The seat for the ball is attached to the top end of the regulator.

3-50. MAINTENANCE, REPAIR, OR REPLACEMENT OF HYDRAULIC SYSTEM PRESSURE REGULATOR (C-47 AND EARLY C-47B AIRPLANES). Replace the pressure regulator if damaged or not functioning properly.

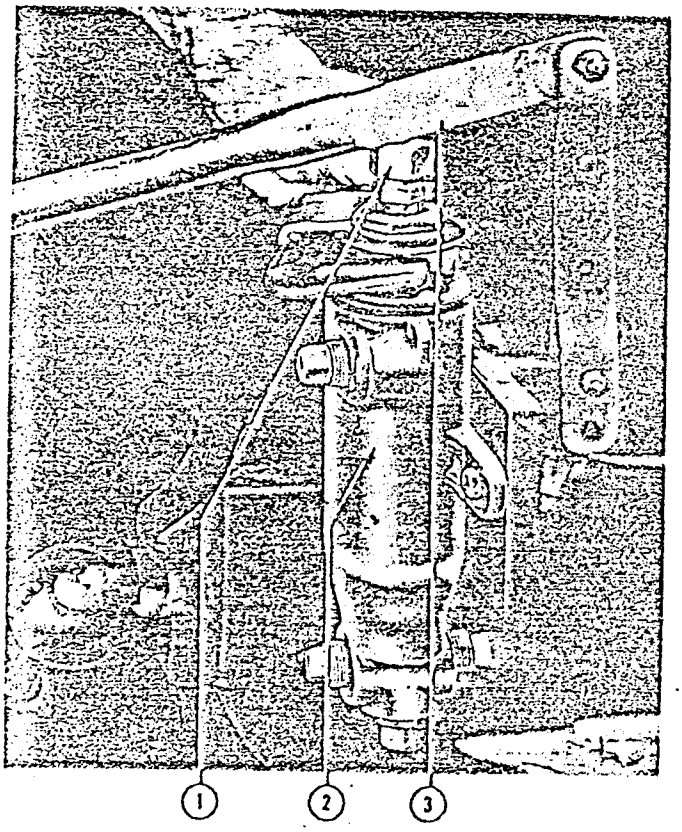

33,296

Figure 3-16. Removal of Regulator End (Early C-47 Airplanes)

Key to Figure 3-16

Item	*Nomenclature*
1.	Fitting (screw into regulator end)
2.	Pressure Regulator
3.	Arbor Press Handle (apply slight pressure while unscrewing end)

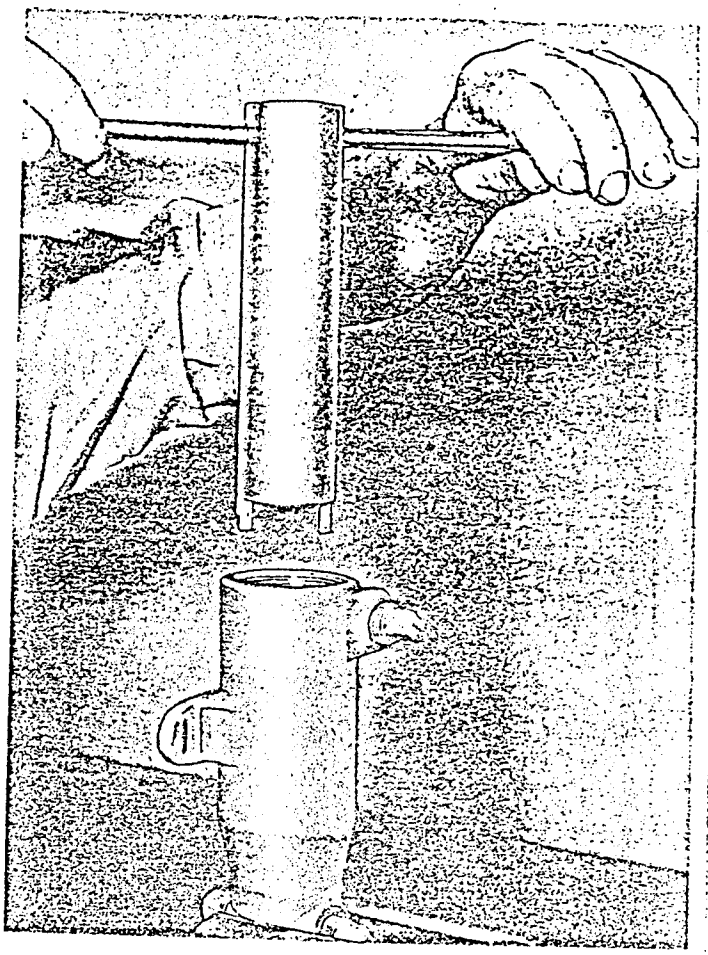

33.297

Figure 3-17. Use of Pressure Regulator Packing Nut Wrench Service Tool No. K21201 — (Early Airplanes)

3-51. ADJUSTMENT OF HYDRAULIC SYSTEM PRESSURE REGULATOR (C-47 AND EARLY C-47B AIRPLANES). If the regulator does not maintain 600 to 875 psi, the removal or addition of one 0.010 inch spacing shim will reduce or increase the release pressure approximately 15 psi.

3-52. ASSEMBLY OF HYDRAULIC SYSTEM PRESSURE REGULATOR (C-47 AND EARLY C-47B AIRPLANES).

a. Clean all parts before assembling the regulator.

b. Install the orifice snubber and stake to the regulator as shown in figure 3-13. The orifice snubber will extend at least one and one-half threads to allow for staking.

c. Install the small spring and the backup ring.

d. Install the packing rings with a blunt tool.

e. Install the spacer.

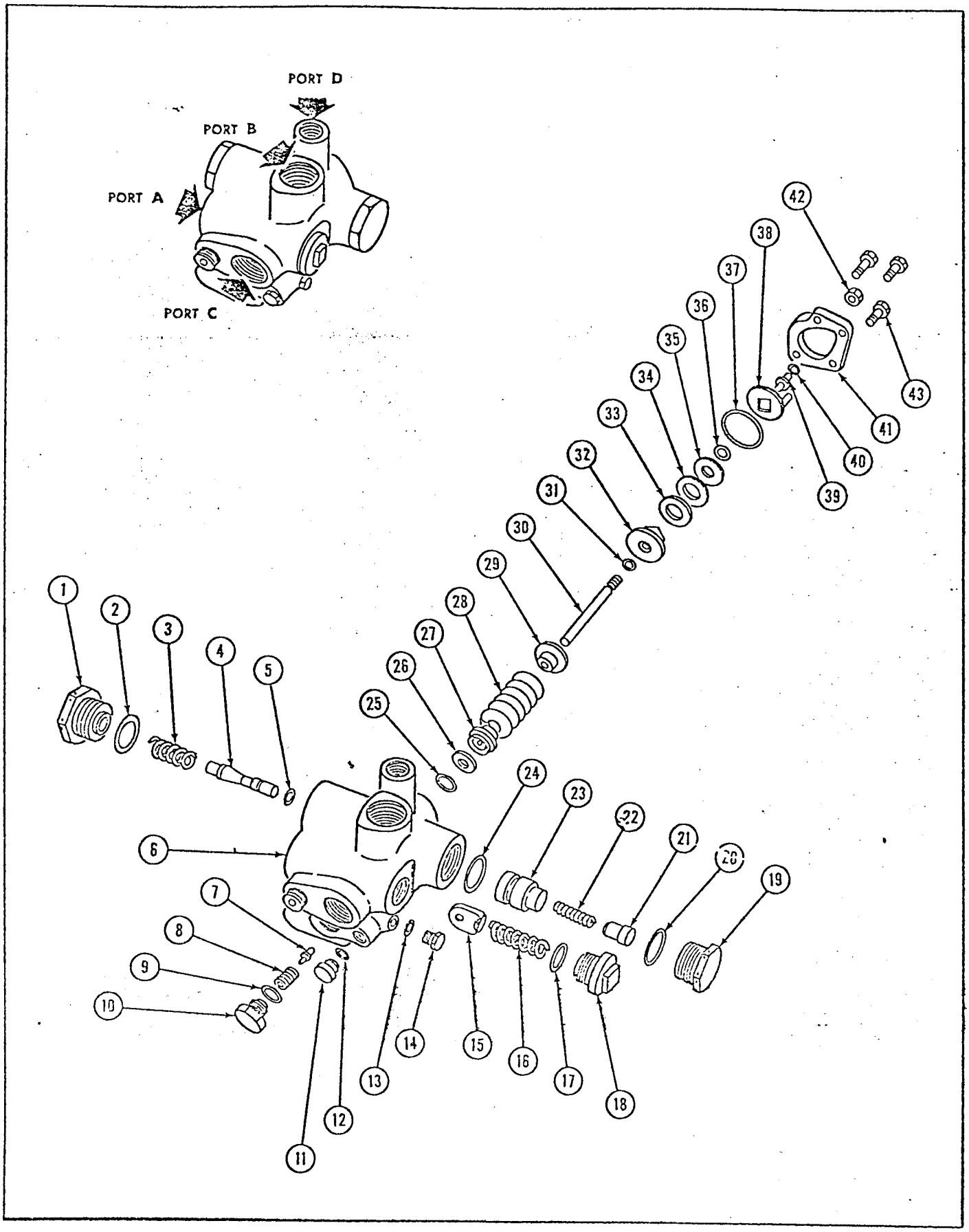

33,298

Figure 3-18. Hydraulic Pressure Regulator (Late C-47B and C-117 Airplanes)

Key to Figure 3-18

Item	Nomenclature	Item	Nomenclature
1.	Plug	23.	Bypass Piston
2.	Packing	24.	Packing
3.	Spring	25.	Adapter
4.	Bypass Poppet	26.	Packing
5.	Packing	27.	Retainer
6.	Body	28.	Spring
7.	Pilot Poppet	29.	Washer
8.	Spring	30.	Rod
9.	Gasket	31.	Packing
10.	Guide	32.	Piston
11.	Plug	33.	Packing
12.	Gasket	34.	Adapter
13.	Gasket	35.	Packing Washer
14.	Plug	36.	Snap Ring
15.	System Check Poppet	37.	Packing
16.	Spring Check Valve	38.	Plate
17.	Packing	39.	Drive Pin
18.	Plug	40.	Packing
19.	Plug	41.	Cap
20.	Packing	42.	Nut
21.	Bleeder Poppet	43.	Cap Screws
22.	Spring		

f. Install the packing nut and stake in place.

Note

Adjust the packing nut and packing so that no more than 6 pounds is required to move the piston up, and no more than 10 pounds is required to move the piston down, when the large spring is removed. The packing must not allow fluid leakage under these conditions.

g. Install the piston, large spring, and the same spacing shims that were removed from the regulator.

h. Install the ball check, gasket, and the bushings in the top end.

i. Install the top end with an arbor press to force the large spring down. Tighten sufficiently so that the end will not leak. Safety the bushing and the top end with lockwire.

3-53. TEST PROCEDURE FOR HYDRAULIC SYSTEM PRESSURE REGULATOR (C-47 AND EARLY C-47B AIRPLANES). The test procedure for the hydraulic system pressure regulator is performed as outlined in table 3-6.

3-54. INSTALLATION OF HYDRAULIC SYSTEM PRESSURE REGULATOR (C-47 AND EARLY C-47B AIRPLANES).

a. Connect all pipes and fittings as shown in figure 3-15.

b. Position the regulator and fasten it to the control panel with two nuts and bolts.

3-55. HYDRAULIC SYSTEM PRESSURE REGULATOR (LATE C-47B AND C-117 AIRPLANES). *(See figure 3-18.)*

3-56. The hydraulic pressure regulator installed on late C-47B and C-117 airplanes is located on the outboard side of the hydraulic control panel, but in a slightly different position *(see figure 3-19)*. The function of the pressure regulator installed on later model airplanes is similar to those provided on earlier airplanes and is described in paragraph 3-46.

TABLE 3-6

TEST-HYDRAULIC SYSTEM PRESSURE REGULATOR (C-47 AND EARLY C-47B)

Test Port	Ports Plugged	Test Pressure (Psi)	Maximum Leakage
A	None	850 1300	1 drop in 1 hour past ball seat.
B	A, C, D, and E	125	None — external.
D	C and E	1300	1 drop in 1 hour past packing.
D	Plug E. Connect A and C	Valve must unseat at 850 to 900 and reseat at 600 minimum.	——

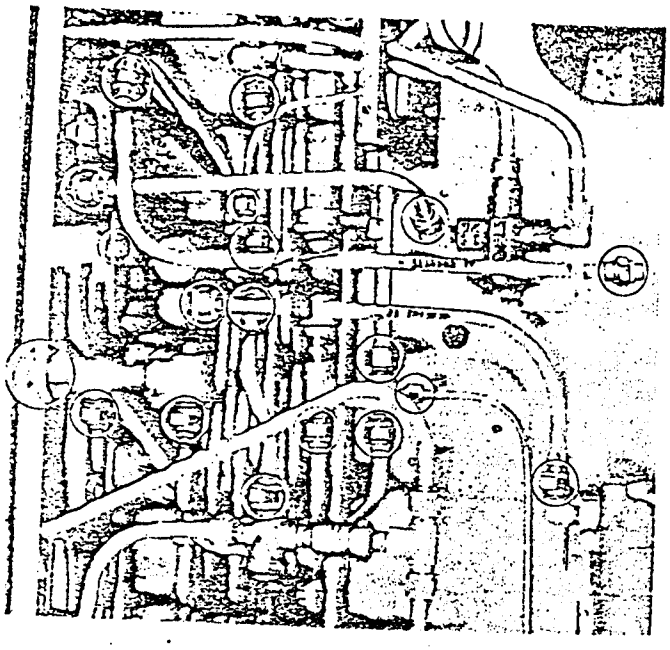

33.301

Figure 3-19. Removal of Hydraulic Pressure Regulator (Late C-47B and C-117 Airplanes)

3-57. REMOVAL OF HYDRAULIC SYSTEM PRESSURE REGULATOR (LATE C-47B AND C-117 AIRPLANES).

a. Relieve the hydraulic system pressure by operating the wing flaps.

b. Mark all pipes and fittings as removed to facilitate reinstallation.

c. Remove the handle from the hydraulic hand pump-to-pressure accumulator shutoff valve.

d. Disconnect and cap all pipes at the connections as shown in figure 3-19.

e. Remove the two nuts and bolts attaching the pressure regulator mount plate to the hydraulic control panel, and remove the regulator.

3-58. DISASSEMBLY OF HYDRAULIC SYSTEM PRESSURE REGULATOR (LATE C-47B AND C-117 AIRPLANES).

a. Cut the lockwire and remove the plug located adjacent to the pressure inlet port A.

b. Cut the lockwire and remove the plug located directly opposite the plug removed in step a, and remove the poppet and spring. Push the bypass piston and the seal from the unit with a piece of ⅜-inch wood dowel.

c. Remove the plug located opposite pressure inlet A and remove the spring and system check poppet.

d. Cut and remove the lockwire. Remove the plug located beneath port C and remove the spring and the pilot poppet.

e. Cut and remove the lockwire from the cap. Remove three screws and the nut holding the cap, and remove the plate, driver pin, and the seal.

f. Pull out the piston, unscrew the piston rod from the piston and remove the seal. Remove the packing, washer, and adapter from the piston by removing the snap ring.

g. Remove the guide plug, spring, retainer, packing, and adapter.

Note

Do not remove any other plugs unless there is evidence of leakage.

3-59. MAINTENANCE, REPAIR, OR REPLACEMENT OF HYDRAULIC SYSTEM PRESSURE REGULATOR (LATE C-47B AND C-117 AIRPLANES). Replace the pressure regulator if damaged or not functioning properly.

3-60. ADJUSTMENT OF HYDRAULIC SYSTEM PRESSURE REGULATOR (LATE C-47B AND C-117 AIRPLANES). If the regulator does not maintain proper maximum system operating pressure of 875 (±25) psi (cutout pressure), adjust the pressure by turning the driver pin in the cap counterclockwise to increase the cutout pressure, or clockwise to decrease it. Tighten the lock nut to assure no further movement of the driver pin. The cut-in pressure cannot be separately adjusted, and if below 600 psi, when cutout pressure is 875 (±25) psi, replace the unit.

CAUTION

Do not attempt to adjust the driver pin when the system pressure is above 500 psi, as this will damage the pilot poppet.

3-61. ASSEMBLY OF HYDRAULIC SYSTEM PRESSURE REGULATOR (LATE C-47B AND C-117 AIRPLANES).

a. Clean all parts thoroughly before assembling the regulator.

b. Install the adapter, packing, and retainer in the bore of the pilot valve, and replace the spring and washer.

c. Position the packing, adapter, and washer on the piston and secure with the snap ring. Place packing over the piston rod and thread the rod into the piston. Position the piston into the unit, making certain that the end of the piston rod is located inside the packing and adapter.

d. Place the packing over the driver pin and position it in the cap. Install the plate and packing in the cap and replace on the unit. Install the lock nut on the

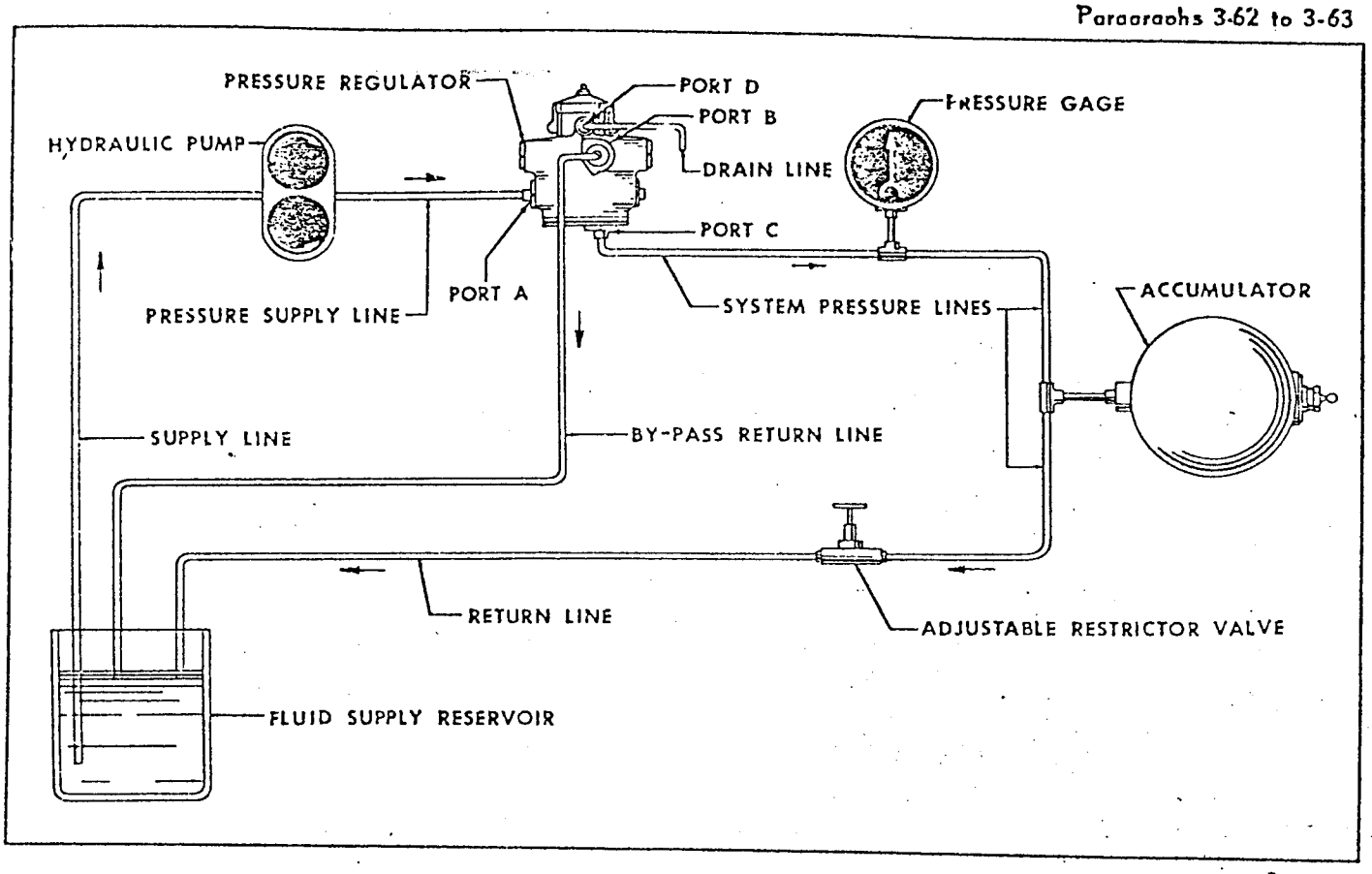

33,302

Figure 3-20. Schematic Hookup for Testing Regulator out of Airplanes

driver pin, secure the cap with three screws, and safety them with lockwire.

e. Replace the packing in the groove on the bypass poppet and install the poppet in the hole adjacent to pressure port A. Insert the spring, seal, gasket, and plug, and safety them with lockwire.

f. Opposite the plug assembled in step e, install packing in the groove in the bypass poppet and install the bypass poppet in the hole adjacent to pressure port A. Insert the spring, seal, plug, and gasket, and safety them with lockwire.

CAUTION

These plugs are not interchangeable and care must be taken that the proper plug is installed in the correct location.

g. Directly opposite the pressure inlet port A, install the system check poppet, spring, packing, plug, and safety with lockwire. Position the spring inside the bleeder poppet and insert the bleeder poppet in the bypass piston. Insert the seal and plug.

3-62. TEST PROCEDURE FOR HYDRAULIC SYSTEM PRESSURE REGULATOR (LATE C-47B AND C-117 AIRPLANES). The test procedure for the hydraulic system pressure regulator is performed as outlined in table 3-7.

TABLE 3-7

TEST - HYDRAULIC SYSTEM PRESSURE REGULATOR (LATE C-47B AND C-117)

Test Port	*Ports Plugged*	*Test Pressure (Psi)*	*Maximum Leakage*
A	C	1300	1 drop per minute at Port B. None — external.
B	A and C	125	None.
C	D	1300	1 drop in 1 hour out any port. None — external.
Using test hookup shown in figure 3-20.		Valve must unseat at 850 to 900 and reseat at 600 minimum.	

3-63. INSTALLATION OF HYDRAULIC SYSTEM PRESSURE REGULATOR (LATE C-47B AND C-117 AIRPLANES).

a. Position the regulator assembly, and attach it to the mount plate on the hydraulic control panel with two nuts and bolts.

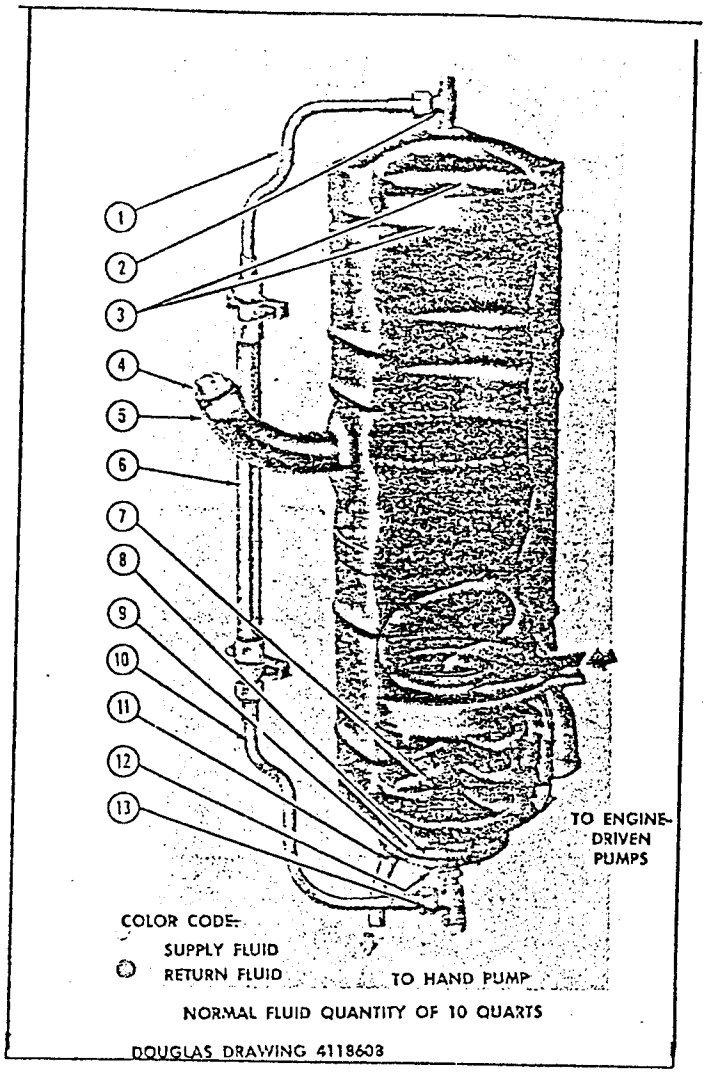

Figure 3-21. Hydraulic System Fluid Reservoir Assembly

Key to Figure 3-21

Item	*Nomenclature*
1.	Pipe
2.	Tee
3.	Baffle Plates
4.	Plug, Gasket, Lockwire
5.	Filler Neck
6.	Sight Gage Assembly
7.	Filter Assembly
8.	Flange
9.	Gasket
10.	Pipe
11.	Cover
12.	Stud and Nut
13.	Reducer, Tee, Plug and Lockwire

b. Connect all pipes and fittings *(see figure 3-19)*.

c. Install the handle to the hydraulic hand pump-to-pressure accumulator shutoff valve.

3-64. HYDRAULIC SYSTEM FLUID RESERVOIR. *(See figure 3-21.)*

3-65. The hydraulic system fluid reservoir contains a strainer assembly to filter the fluid, and a baffle to separate the strained fluid from the returned fluid of the hydraulic system. The reservoir is installed to the right of the hydraulic control panel and is equipped with a filler neck for servicing the reservoir from the walkway area. A sight gage is installed on the upper portion of the hydraulic control panel to indicate the fluid level in the reservoir. The outlet to the engine-driven hydraulic pumps is located above the bottom level of the reservoir so that an emergency supply of fluid, available only to the hydraulic pump, always remains in the bottom of the reservoir and cannot be drawn out by the engine pumps. The outlet for the hydraulic hand pump is located at the bottom of the reservoir sump. The capacity of the hydraulic reservoir is 10 quarts of oil when filled to the top arrow of the sight gage. Seven quarts of oil are available for supplying the engine-driven pumps and the remaining 3 quarts in the reservoir sump are available only to the hydraulic hand pump. Sufficient space is provided at the top of the reservoir to allow for thermal expansion of the oil. Agitation and foaming of the hydraulic fluid is prevented by baffle plates located in the top area of the reservoir. A vent pipe is connected to the top of the reservoir. Fill the reservoir with hydraulic fluid, Specification MIL-O-5606.

3-66. REMOVAL OF HYDRAULIC SYSTEM FLUID RESERVOIR.

a. Relieve the hydraulic system pressure by operating the wing flaps.

b. Remove the plug from the tee located at the bottom of the reservoir, and drain the hydraulic fluid into a clean container.

c. Disconnect and cap all pipes leading to the reservoir.

d. Remove the strap assembly securing the reservoir and remove the reservoir.

3-67. DISASSEMBLY OF HYDRAULIC SYSTEM FLUID RESERVOIR.

a. Remove the eight studs attaching the bottom cover and strainer flange to the bottom flange of the reservoir.

b. Remove the reservoir cover, gaskets, and the strainer assembly.

3-68. MAINTENANCE, REPAIR, OR REPLACEMENT OF HYDRAULIC SYSTEM FLUID RESERVOIR.

a. Clean the strainer with a brush and clean solvent.

b. Flush the reservoir with solvent and allow to dry thoroughly.

c. Weld small holes or cracks in the hydraulic reservoir.

d. Solder small holes or tears in the strainer assembly.

e. Replace damaged or leaking fluid level sight gage.

f. Replace hydraulic reservoir if damaged beyond repair.

3-69. ASSEMBLY OF HYDRAULIC SYSTEM FLUID RESERVOIR. Install the reservoir cover, gaskets, and strainer assembly, and then attach the bottom cover and strainer flange to the bottom flange of the reservoir with the eight studs.

3-70. TEST PROCEDURE FOR HYDRAULIC SYSTEM FLUID RESERVOIR. Apply 15 psi internal pressure with all outlets plugged. No leakage is permissible.

3-71. INSTALLATION OF HYDRAULIC SYSTEM FLUID RESERVOIR.

a. Position the reservoir and secure the supporting strap assembly.

b. Connect the pipes leading to the reservoir.

c. Install the plug in the tee located at the bottom of the reservoir.

d. Fill the system with hydraulic fluid, Specification MIL-O-5606.

3-72. HYDRAULIC SYSTEM PRESSURE RELIEF VALVE.
(See figure 3-22.)

3-73. The system pressure relief valve protects the hydraulic system from excessive fluid pressure when the hydraulic pressure regulator fails to operate. The valve, located adjacent to the pressure regulator in the hydraulic control panel assembly, consists of an aluminum-alloy housing enclosing a spring-loaded stem and ball assembly with the ball seating on a steel bushing. If the hydraulic pressure regulator fails to operate properly, and if the system pressure increases to 1000 (±50) psi, the system pressure relief valve opens, routing the excess fluid through the relief valve and the return pipe to the hydraulic fluid reservoir. The valve ball is reseated by the spring when the pressure decreases to 950 (±50) psi. The valve contains two ports; one connected to the return pipe of the hydraulic reservoir, and the other to the pressure regulator.

3-74. REMOVAL OF HYDRAULIC SYSTEM PRESSURE RELIEF VALVE.

a. Relieve the hydraulic system pressure by operating the wing flaps.

b. Remove the handle from the hand pump-to-pressure accumulator shutoff valve.

c. Disconnect and cap all connections.

d. Remove the bolts and nuts attaching the pressure regulator to the control panel and remove the pressure regulator, fittings, and the system pressure relief valve.

3-75. DISASSEMBLY OF HYDRAULIC SYSTEM PRESSURE RELIEF VALVE.

a. Remove the valve from the pressure regulator.

b. Remove the tee and cross from the bottom port of the valve.

c. Remove the cap and lock nut from the valve.

d. Remove the guide, spring, and stem assembly from the valve housing. Remove the seat assembly.

3-76. ADJUSTMENT OF HYDRAULIC SYSTEM PRESSURE RELIEF VALVE. Adjust the spring release pressure so that the valve opens when the system pressure increases to 1000 (±50) psi, and closes when the pressure decreases to 950 (±50) psi. Loosen the lock nut and increase or decrease the spring tension by tightening or loosening the stem guide. Tighten the lock nut after the valve has been adjusted.

3-77. ASSEMBLY OF HYDRAULIC SYSTEM PRESSURE RELIEF VALVE.

a. Position the seat assembly and install the stem assembly, spring, and guide.

b. Install the lock nut and cap to the valve.

c. Install the cross and tee to the bottom port of the valve, and then attach the assembly to the pressure regulator.

3-78. TEST PROCEDURE FOR HYDRAULIC SYSTEM PRESSURE RELIEF VALVE. The test procedure for the hydraulic system pressure relief valve is performed as outlined in table 3-8.

TABLE 3-8
TEST - HYDRAULIC SYSTEM PRESSURE RELIEF VALVE

Test Port	*Test Pressure Psi*	*Maximum Leakage*
A	225	10 drops in 1 hour at B. No other leakage.
B	Opening pressure 1000 (±50)	----
B	Reseating Pressure 950 (±50)	1 drop in 5 Minutes

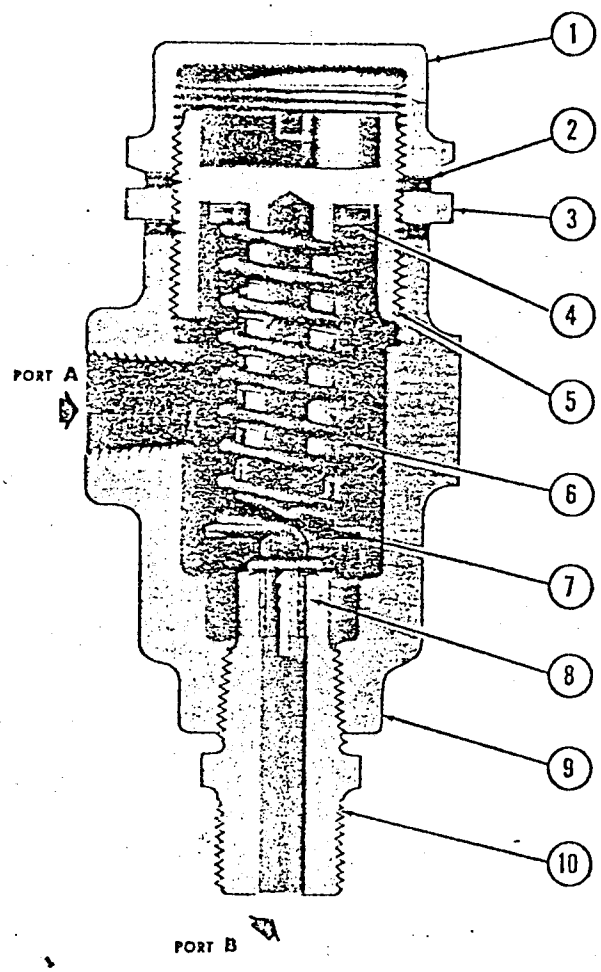

Figure 3-22. Hydraulic System Pressure Relief Valve Assembly

33,304

Key to Figure 3-22

Item	*Nomenclature*
1.	Cap
2.	Gasket
3.	Lock Nut
4.	Washer
5.	Guide
6.	Spring
7.	Stem Assembly
8.	Bushing
9.	Housing
10.	Body

3-79. INSTALLATION OF HYDRAULIC SYSTEM PRESSURE RELIEF VALVE.

a. Position the regulator on the control panel and secure it with nuts and bolts.

b. Remove the caps and connect all fittings.

c. Install the handle to the hand pump-to-pressure accumulator shutoff valve.

3-80. HYDRAULIC HAND PUMP.
(See figures 3-23 and 3-24.)

3-81. The hydraulic hand pump, located at the bottom of the hydraulic control panel is a double-acting, piston-type pump which supplies fluid pressure with each stroke of the pump handle. The pump mechanism

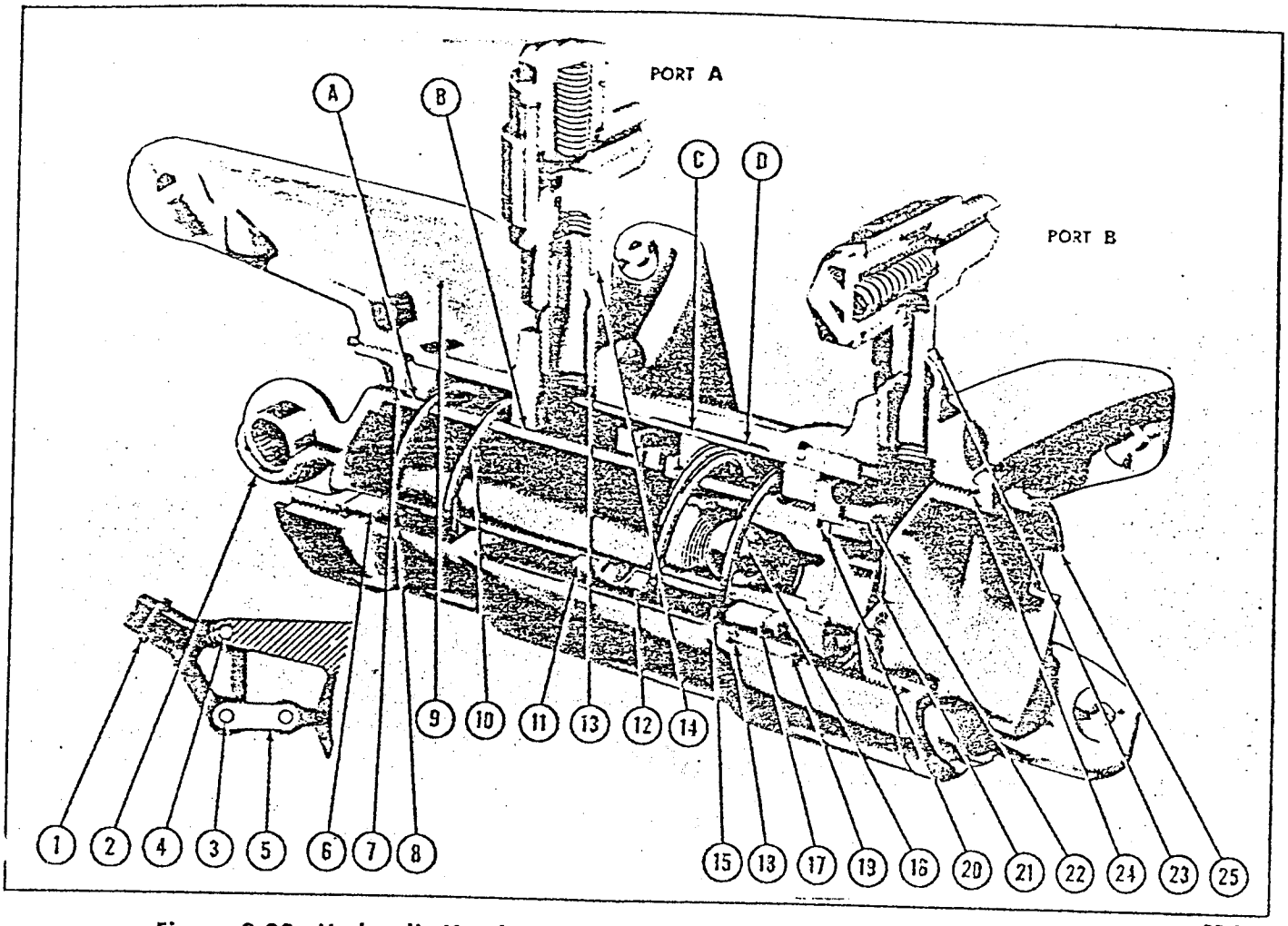

Figure 3-23. Hydraulic Hand Pump Assembly (C-47 and Early C-47B Airplanes)

33,305

Key to Figure 3-23

Item	Nomenclature	Item	Nomenclature
1.	Handle Assembly	14.	Check Valve
2.	Shaft Assembly	15.	Packing Cup
3.	Bolt	16.	Spring
4.	Bolt	17.	Ring Packing
5.	Link	18.	Washer
6.	Ring	19.	Liner
7.	Packing Nut	20.	Washer
8.	Packing Cup	21.	Valve Assembly
9.	Housing	22.	Collar
10.	Spring	23.	Check Valve
11.	Spacer	24.	Washer
12.	Ring	25.	End
13.	Hex Nipple		

REWORK TOLERANCES

a. Diametric clearance between spacer and piston should not exceed 0.010 inch. Rework to 0.0005- to 0.0025-inch clearance by replacing spacer or chrome plating piston.

b. Manufacturing dimension of piston is 1.4985 to 1.4995-inch OD. Do not grind piston more than 0.020 inch undersize. Pistons may be hard chrome plated to a thickness of 0.010 inch on a radius.

c. Manufacturing dimension of liner is 2.264-inch ID. Because of strength requirements, the inside diameter of the liner should not be honed larger than 2.272 inch.

d. Diametric clearance between spacer and liner should not exceed 0.010 inch. Rework to 0.001- to 0.004-inch clearance by replacing spacer.

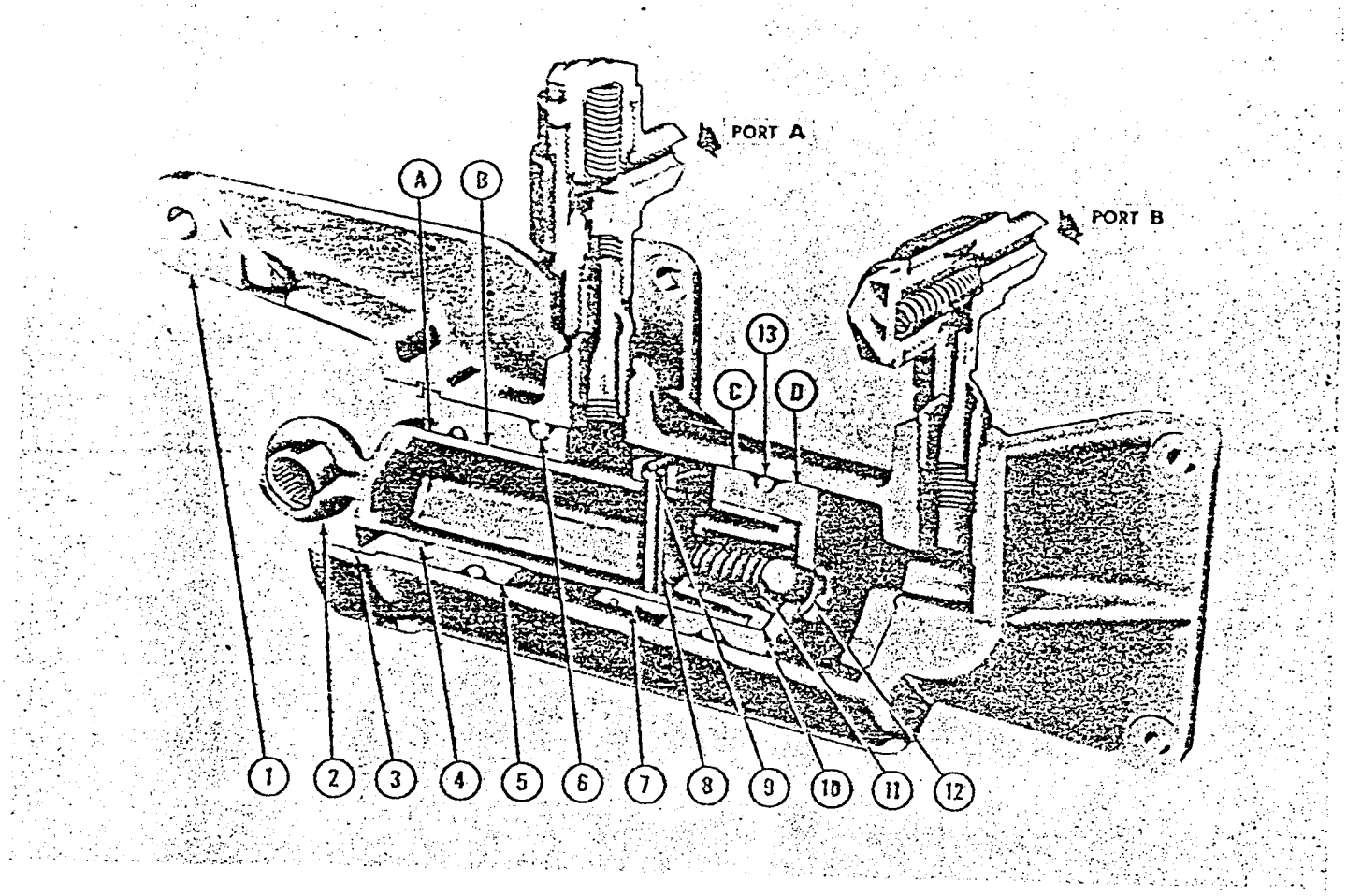

33,306

Figure 3-24. Hydraulic Hand Pump Assembly (Late C-47B, C-47D, and C-117 Airplanes)

Key to Figure 3-24

Item	*Nomenclature*
1.	Housing
2.	Rod Assembly
3.	Snap Ring
4.	Ring
5.	Gland
6.	Ring
7.	Head
8.	Pin
9.	Retainer Ring
10.	Ball Retainer
11.	Spring
12.	Precision Ground Stainless Steel Ball
13.	Ring

consists of a piston and check valve assembly operating in the pump housing. Check valves, located in the supply and pressure ports of the pump, maintain proper direction of flow in the pump. On the upward stroke of the hand pump handle, the piston assembly moves forward, forcing the fluid in the forward chamber into the pressure port and drawing fluid into the aft chamber of the pump. On the downward stroke of the pump handle, the piston moves aft unseating the ball check in the piston and forcing part of the fluid in the aft chamber of the pump into the pressure port. The hydraulic hand pump functions in two ways; it supplies hydraulic fluid pressure during flight when the engine pumps fail; and it also supplies hydraulic fluid pressure for operation of hydraulic units when the airplane is on the ground and it is not convenient to operate the engines. If it is necessary to increase pressure in the hydraulic pressure accumulator by operating the hand pump, open the hand pump-to-pressure accumulator shutoff valve located on the hydraulic panel *(see figure 3-6)*. The shutoff valve MUST be closed during flight so that the hydraulic units are directly actuated by operation of the hand pump. Hydraulic fluid is supplied to the hand pump from the bottom section of the hydraulic fluid reservoir. The reservoir is so designed that the engine pump cannot remove the emergency supply of fluid reserved for the hand pump.

3-82. REMOVAL OF HYDRAULIC HAND PUMP.

a. Relieve the hydraulic system pressure by operating the wing flaps.

b. Disconnect the suction and pressure pipes from the external check valves.

c. Remove the bolts attaching the hand pump to the control panel and remove the pump.

d. Plug the suction and the return pipes.

3-83. DISASSEMBLY OF HYDRAULIC HAND PUMP (C-47A AND EARLY C-47B AIRPLANES). *(See figure 3-23.)*

a. Remove the handle assembly by removing the attaching bolts.

b. Cut the lockwire and remove the collar end, using Douglas tool K26409.

c. Pull the piston assembly from the cylinder.

d. Disassemble the check valve by removing the plug, spring, and ball from the seat.

e. Cut the lockwire and remove the piston shaft packing nut, using Douglas tool K26410 *(see figure 3-25)*.

f. Remove the packing ring, the packing cup, and the spring.

g. Remove the check valves from the supply and pressure ports of the pump.

3-84. ASSEMBLY OF HYDRAULIC HAND PUMP (C-47A AND EARLY C-47B AIRPLANES).

a. Install the check valves to the supply and pressure ports of the pump.

b. Install the spring, the packing cup, and the packing ring.

c. Install the piston shaft packing nut with Douglas tool K26410, and safety it with lockwire.

d. Assemble the valve by installing the ball, spring, and plug.

e. Place the piston assembly in the cylinder.

f. Install and tighten the collar end with Douglas tool K26409 and safety it with lockwire.

g. Install the handle assembly to the pump with attaching bolts.

3-85. TEST PROCEDURE FOR HYDRAULIC HAND PUMP (C-47A AND EARLY C-47B AIRPLANES). The test procedure for the hydraulic hand pump is performed as outlined in Table 3-13.

3-86. INSTALLATION OF HYDRAULIC HAND PUMP (C-47A AND EARLY C-47B AIRPLANES). Bolt the hand pump to the hydraulic panel and connect the pipes to the external check valves.

3-87. DISASSEMBLY OF HYDRAULIC HAND PUMP (LATE C-47B, C-47D, AND C-117 AIRPLANES).

a. Remove the handle assembly of the pump by removing the attaching bolts.

b. Remove the snap ring.

c. Pull the piston assembly and the packing gland from the cylinder.

d. Remove the packing gland from the piston assembly.

e. Remove the retaining ring and the retaining pin from the piston assembly.

f. Remove the piston head and disassemble the ball check.

g. Remove the check valves from the supply and pressure ports of the hand pump.

3-88. ASSEMBLY OF HYDRAULIC HAND PUMP (LATE C-47B, C-47D, AND C-117 AIRPLANES).

a. Clean all parts before assembling.

b. Replace the check valves to the supply and pressure ports of the pump.

c. Assemble the ball check and replace the piston head.

TABLE 3-9

TEST - HYDRAULIC HAND PUMP (C-47A AND EARLY C-47B)

Port A	*Port B*	*Position*	*Handle Load*	*Flow*	*External Leakage*	*Maximum Allowance Handle Creep*
Connect to 800 psi relief valve.	Connect to reservoir.	Operate slowly.	190 lbs maximum.			
Connect to 800 psi relief valve.	Connect to reservoir.	Operate 120 cycles each minute.		198 cubic inches a minute.		
Plugged.	Connect to reservoir.	Piston extended.	240 lbs.		No leakage in 15 minutes.	1/8 inch in 15 minutes.
Plugged.	Connect to reservoir.	Piston retracted.	195 lbs.		No leakage in 15 minutes.	1/4 inch in 15 minutes.

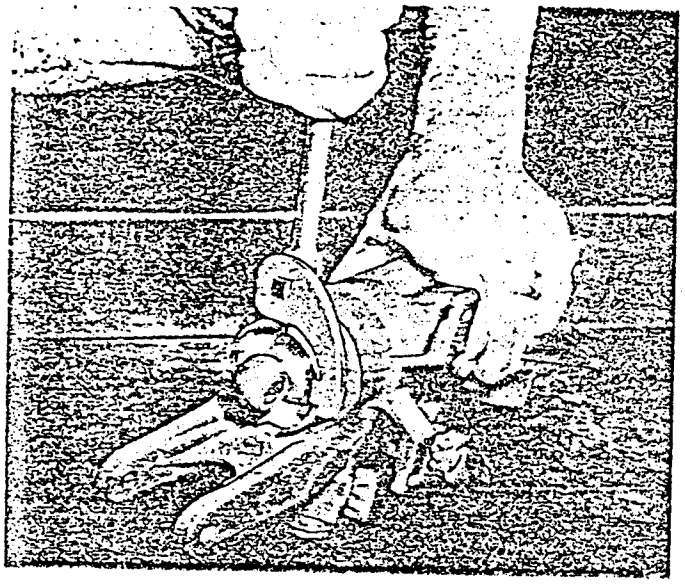

33,3071

Figure 3-25. Use of Hydraulic Hand Pump Packing Nut Spanner Wrench (Service Tool No. K26410)

d. Position the retaining pin and the retaining ring in the piston assembly.

e. Install the packing gland on the piston assembly.

f. Install the packing gland and the piston assembly in the cylinder.

g. Replace the snap ring.

h. Secure the handle assembly of the pump with the attaching bolts.

3-89. TEST PROCEDURE FOR HYDRAULIC HAND PUMP (LATE C-47B, C-47D, AND C-117 AIRPLANES). The test procedure for the hydraulic hand pump is performed as outlined in table 3-10.

TABLE 3-10
TEST - HYDRAULIC HAND PUMP
(LATE C-47B, C-47D, AND C-117)

Port A	*Port B*	*Piston Position*	*External Leakage*	*Leakage at Standpipe*	*Flow*
1500 psi	Full standpipe	Retracted	1 drop in 48 hours	10 drops per hour	
Flowing	80 (± 20) psi	Extended	1 drop in 48 hours		2 gallons a minute

Note: These tests are to be made on the pump assembly before installing the exterior check valves.

3-90. INSTALLATION OF HYDRAULIC HAND PUMP (LATE C-47B, C-47D, AND C-117 AIRPLANES). Bolt the pump to the hydraulic control panel and connect the pipes to the external check valves.

3-91. HAND PUMP-TO-PRESSURE ACCUMULATOR SHUTOFF VALVE. *(See figure 3-26.)*

3-92. The hand pump-to-pressure accumulator shutoff valve is located at the bottom of the pressure regulator with the handle located near the center of the hydraulic panel. This valve provides a bypass around the check valve in the pressure manifold if it is necessary to increase the hydraulic pressure in the pressure accumulator by operating the hand pump when the airplane is on the ground and the engines are not operating. The valve consists of a valve plug, housing, and valve handle. A small hole is drilled through the valve plug or the valve seat to provide for relief of excess fluid pressure existing in the pressure manifold.

Note

Open the valve only when the airplane is on the ground. Safetywire the valve in the OFF position at all times during flight to permit hand pump operation for delivering fluid directly to the actuating cylinders.

3-93. REMOVAL OF HAND PUMP-TO-PRESSURE ACCUMULATOR SHUTOFF VALVE.

a. Relieve the system pressure by operating the wing flaps.

b. Disconnect and cap the hydraulic pipe from the valve.

c. Unscrew the valve from the bottom of the hydraulic pressure regulator and remove the valve.

3-94. TEST PROCEDURE FOR HAND PUMP-TO-PRESSURE ACCUMULATOR SHUTOFF VALVE. The test procedure for the hand pump-to-pressure accumulator shutoff valve is performed as outlined in table 3-11.

TABLE 3-11
TEST - HAND PUMP-TO-PRESSURE ACCUMULATOR SHUTOFF VALVE

Test Port	*Ports Plugged*	*Test Pressure Psi*	*Handle Position*	*Maximum Leakage*	*Flow*
A	B	1500	Closed to open	1 drop in 48 hours past packing.	
A	None	100	Closed	None	4 to 12 cubic inches a minute.

3-95. INSTALLATION OF HAND PUMP-TO-PRESSURE ACCUMULATOR SHUTOFF VALVE.

a. Position the valve and attach it to the bottom of the hydraulic pressure regulator.

b. Connect the hydraulic pipe to the valve.

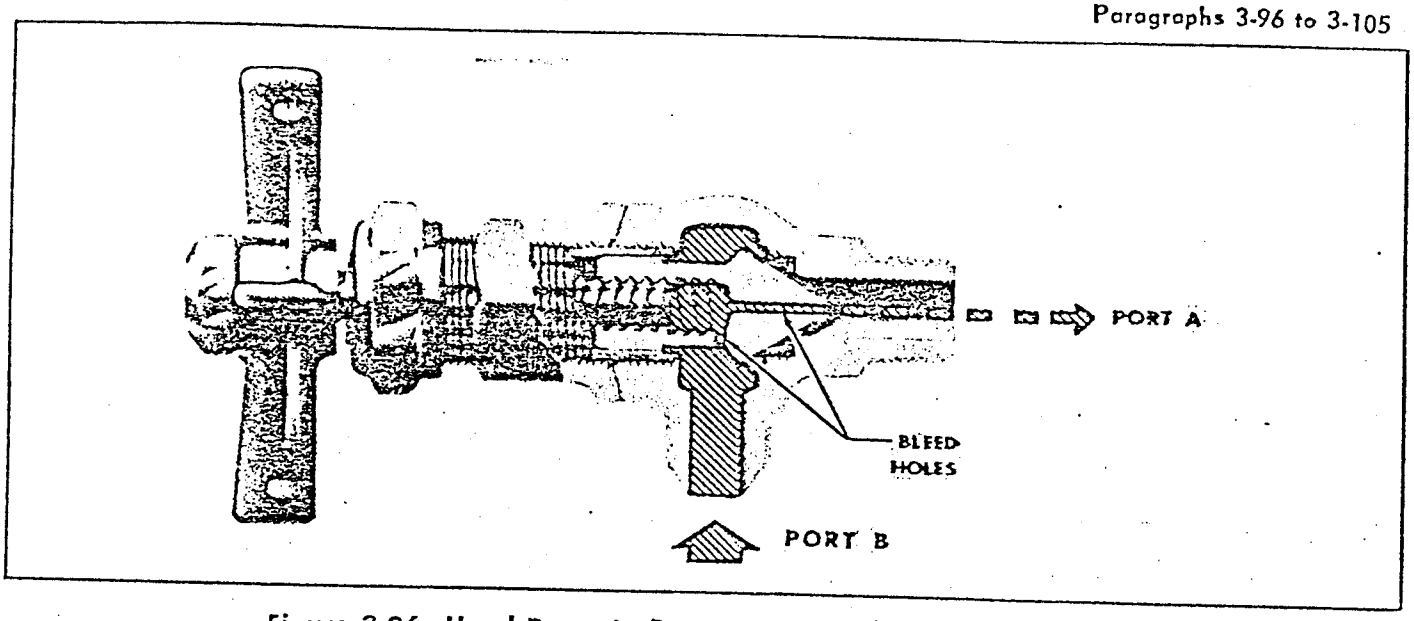

Figure 3-26. Hand Pump-to-Pressure Accumulator Shutoff Valve

33,309

3-96. DISCONNECT VALVES.
(See figure 3-27.)

3-97. The disconnect valves are installed in the hydraulic supply and pressure pipes to the engine pumps, and are located on the firewall. The valves are provided for disconnecting the hydraulic pipe at the firewall without the loss of fluid, or the introduction of air into the pipes when the engine section is being removed from the airplane. The valve consists of a spring-loaded steel ball seating on the valve housing, a union fitting, and a gasket. When the hose assembly connecting the engine pump to the disconnect valve is installed, the ball in the valve is unseated by a pin located in the hose assembly end and the hydraulic fluid flows through the valve. When the hose assembly is disconnected, the ball is seated by the spring and the fluid flow is checked. When the engine is being removed from the airplane, it is not necessary to drain the hydraulic pipes at the firewall.

3-98. REMOVAL OF DISCONNECT VALVE.

a. Relieve the hydraulic system pressure by operating the wing flaps.

b. Disconnect and cap the hose from the disconnect valve.

c. Unscrew the lock nut holding the valve to the plate assembly on the firewall, and remove the washers and valve. Cap the pipe.

3-99. DISASSEMBLY OF DISCONNECT VALVE. Cut the lockwire. Unscrew the union fitting and remove the gasket, spring, and steel ball.

3-100. ASSEMBLY OF DISCONNECT VALVE.

a. Clean all parts thoroughly before assembly. Use ample approved thread lubricant on all threads.

b. Install the steel ball, spring, and gasket. Tighten the union fitting on the valve, and safety with lockwire.

3-101. TEST PROCEDURE FOR DISCONNECT VALVE. The test for the disconnect valve is performed as outlined in table 3-12.

TABLE 3-12

TEST - DISCONNECT VALVE

Test Port	*Ports Plugged*	*Test Pressure Psi*	*Maximum Leakage*
A	None	5	10 drops in 1 hour.
A	None	800	10 drops in 1 hour past ball. No other leakage.

3-102. INSTALLATION OF DISCONNECT VALVE.

a. Install the washers, position the valve, and tighten the lock nut to the plate on the firewall.

b. Connect the hose and the pipe to the valve.

3-103. CHECK VALVES.
(See figure 3-28.)

3-104. Check valves are installed in the hydraulic system piping to maintain the flow of fluid in one direction only, thus preventing reverse flow of fluid. The check valves consist of a housing with inlet and outlet openings and containing a ball or poppet, valve seat, and spring. The check valves provided differ only in size, shape, and the end fittings installed.

3-105. REMOVAL OF CHECK VALVE.

a. Relieve the hydraulic system pressure by operating the wing flaps.

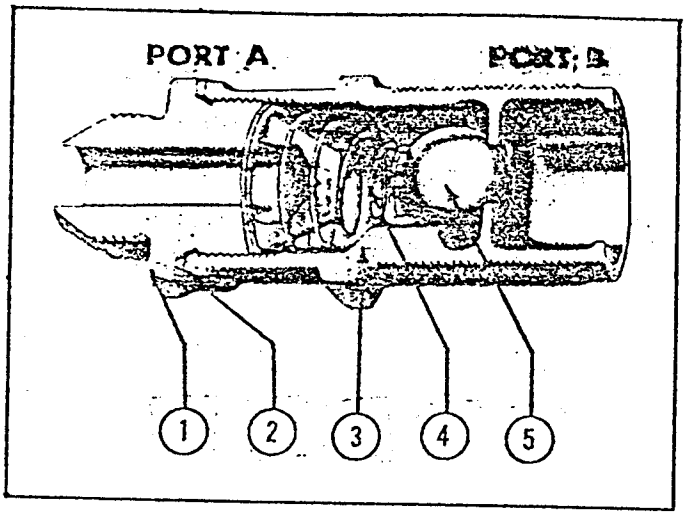

33,309

Figure 3-27. Typical Disconnect Valve

Key to Figure 3-27

Item	*Nomenclature*
1.	Valve
2.	Gasket
3.	Body
4.	Spring
5.	Steel Ball

b. Disconnect and cap the pipes or fittings leading to the check valve and remove the valve.

3-106. DISASSEMBLY OF CHECK VALVE. Unscrew the end fitting or plug, and remove the ball or poppet and spring.

3-107. ASSEMBLY OF CHECK VALVE.

a. Clean all parts thoroughly.

b. Install the spring and poppet or ball, and attach the plug or end fitting to the valve.

3-108. TEST PROCEDURE FOR CHECK VALVE. For the test procedure for the check valve, see figure 3-28.

3-109. INSTALLATION OF CHECK VALVE. Position the check valve and connect the pipes or fittings to the valve.

3-110. HYDRAULIC PRESSURE GAGE. *(See figures 3-29 and 3-30.)*

3-111. Two hydraulic pressure gages are mounted on the right side of the flight compartment. One gage indicates the fluid pressure in the hydraulic system and the other indicates the fluid pressure in the landing gear DOWN pipe. Both Bourdon-tube type gages are identical. The hydraulic fluid under pressure flows through the brass fitting of the gage into the actuating Bourdon tube. One end of the tube is soldered into the fitting and the opposite end is closed and free to move. The Bourdon tube straightens as the hydraulic pressure increases inside the tube and the movement of the free end of the tube is transmitted through a linkage to the geared mechanism which amplifies and transfers the motion to the pointer on the calibrated dial which indicates the hydraulic pressure. A hairspring takes up the backlash in the gage mechanism, and two stops limit the gear sector movement and rotation of the pointer at 0 and 2000 psi.

3-112. REMOVAL OF HYDRAULIC PRESSURE GAGE.

a. Relieve the hydraulic system pressure by operating the wing flaps.

b. Disconnect and cap the pipe from the gage.

c. Remove the screws attaching the bracket and gage assembly.

d. Remove the screws attaching the gage and collars to the bracket assembly and remove the gage.

3-113. INSTALLATION OF HYDRAULIC PRESSURE GAGE.

a. Position the gage and tighten the screws attaching the gage and collar to the bracket assembly.

b. Install the screws attaching the bracket and gage assembly to the airplane.

c. Connect the pipe to the gage.

3-114. ENGINE-DRIVEN HYDRAULIC PUMP. *(See figures 3-31 and 3-32.)*

3-115. Two engine-driven, double-gear, positive displacement hydraulic pumps furnish fluid pressure for the hydraulic and autopilot systems. The pumps are mounted on the inboard side of each accessory section and consist of two steel gears mounted in a housing, arranged so that one gear, driven by the splined drive coupling engaging the engine accessory drive, meshes with and drives the other or idler gear. The meshing gears are lubricated by the hydraulic fluid flowing through the pump, and the pumping action is accomplished by meshing the gears, which creates a suction and draws fluid through the inlet port of the pump and out the supply port. The drive coupling of the pump incorporates a safety shear section which disengages the pump in the event of pump failure due to excessive load or jamming of the parts. A pipe is connected to one of the ports in the pump mounting

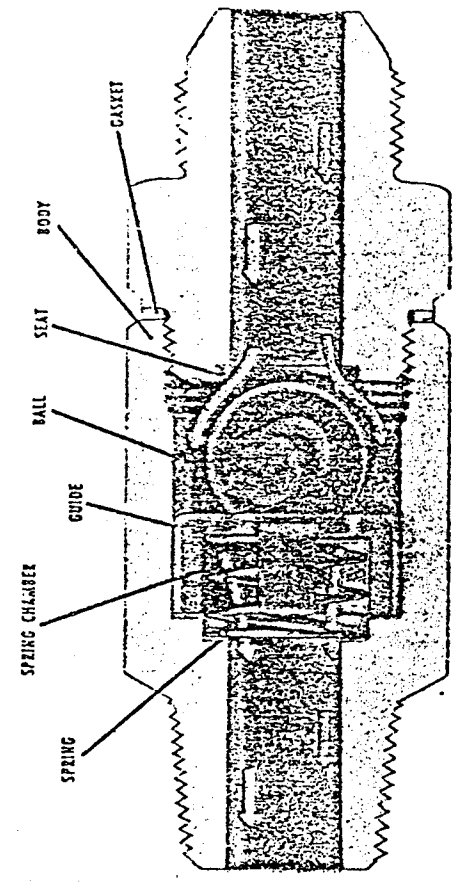

FLOW OF FLUID

Fluid pressure exerted on ball from inside seat forces ball from seat, moving guide back and compressing spring. When valve opens, fluid flows around ball and through spring chamber.

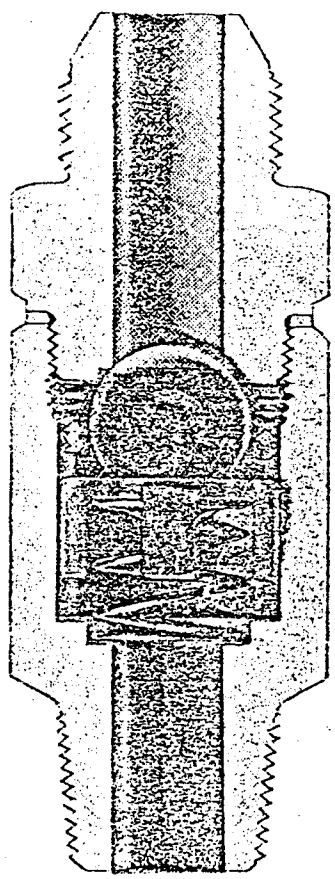

BACK FLOW PREVENTED

As fluid stops flowing, pressure on either side of ball is equalized for an instant before flow direction can change. Released spring forces guide to return ball to seat closing valve before fluid can back flow. If back flow pressure increases, valve is held closed by proportionately, more force.

COLOR CODE:
- HYDRAULIC FLUID
- HYDRAULIC FLUID PRESSURE

BALL TYPE

POPPET TYPE

SCHEMATIC VIEWS OF CHECK VALVES

CHECK VALVE

ORIFICE VALVE

An orifice check valve is a check valve with a hole in the poppet. Its purpose is to allow free flow of fluid in one direction, but only to restrict back flow instead of stopping it entirely. Time lag produced by the restriction depends on the size of the hole in the poppet.

EXTERIOR VIEWS OF TYPICAL CHECK VALVES

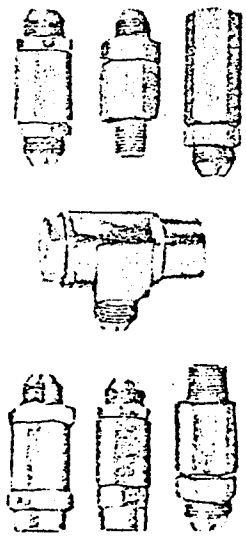

TEST PROCEDURE

TEST PORT	PORTS PLUGGED	TEST PRESSURE	MAXIMUM LEAKAGE
OUTLET	NONE	1500 psi.	NONE
OUTLET	NONE	5 psi.	1 DROP IN 2 MINUTES INTERNAL NONE EXTERNAL
OPENING PRESSURE AT INLET 2 TO 6 psi			

Figure 3-28. Typical Check Valve

14.46B

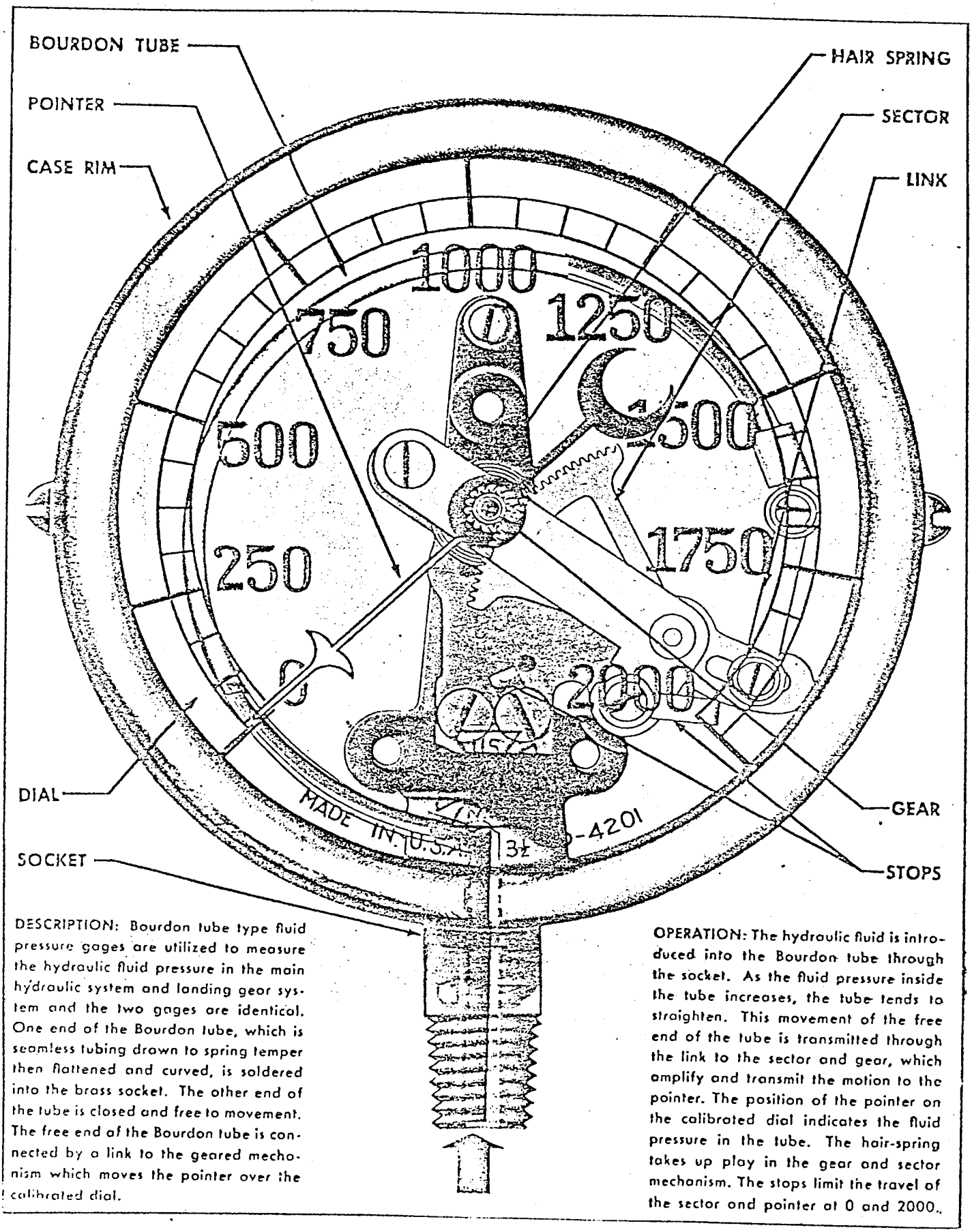

DESCRIPTION: Bourdon tube type fluid pressure gages are utilized to measure the hydraulic fluid pressure in the main hydraulic system and landing gear system and the two gages are identical. One end of the Bourdon tube, which is seamless tubing drawn to spring temper then flattened and curved, is soldered into the brass socket. The other end of the tube is closed and free to movement. The free end of the Bourdon tube is connected by a link to the geared mechanism which moves the pointer over the calibrated dial.

OPERATION: The hydraulic fluid is introduced into the Bourdon tube through the socket. As the fluid pressure inside the tube increases, the tube tends to straighten. This movement of the free end of the tube is transmitted through the link to the sector and gear, which amplify and transmit the motion to the pointer. The position of the pointer on the calibrated dial indicates the fluid pressure in the tube. The hair-spring takes up play in the gear and sector mechanism. The stops limit the travel of the sector and pointer at 0 and 2000.

Figure 3-29. Operation of Hydraulic Fluid Pressure Gage

14.341

flange to drain off any hydraulic fluid that may work past the drive coupling seal.

Note

The pump has loosely fitted seal-type pressure-loaded bushings to compensate for wear and for satisfactory operation in cold weather.

3-116. REMOVAL OF ENGINE-DRIVEN HYDRAULIC PUMP.

a. Relieve the hydraulic system pressure by operating the wing flaps.

b. Disconnect the flexible hoses at the disconnect fittings on the firewall. Disconnect the hoses attached to the pump.

c. Remove the nuts attaching the pump to the mounting pad and remove the pump.

3-117. DISASSEMBLY OF ENGINE-DRIVEN HYDRAULIC PUMP.

a. Remove the gasket from the mounting flange.

b. Remove the nut, adapter, and the gasket.

c. Remove the plugs, gaskets, and the seal rings.

d. Remove the valve retainer, spring, ball, seat, gasket, and the seal ring.

e. Remove the screw, lock plate, and seal retainer. Lift out the driveshaft and remove the seal disc, seal rings, seal cup, spring, and gasket.

f. Remove the nuts and washers. Separate the cover from the body and remove the gasket.

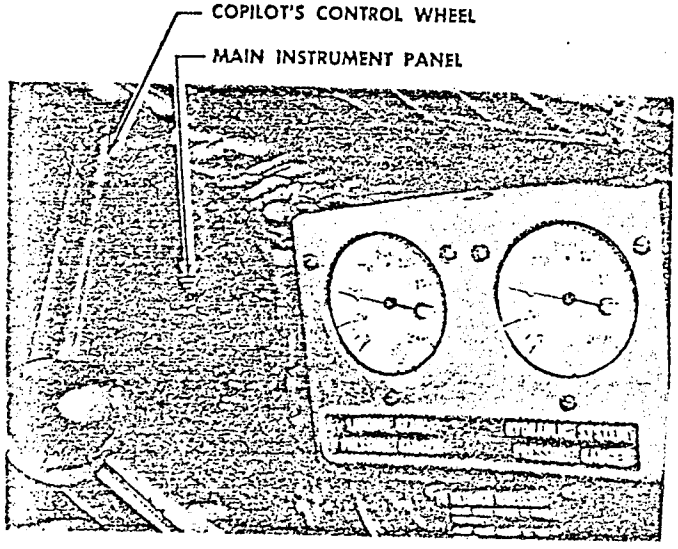

14,317

Figure 3-30. Hydraulic Fluid Pressure Gages Installed

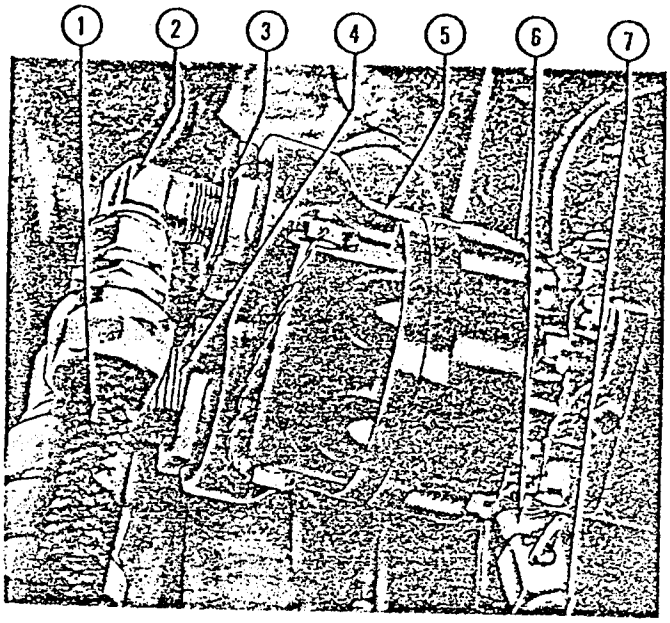

33,310

Figure 3-31. Engine-Driven Hydraulic Pump Installed

Key to Figure 3-31

Item	*Nomenclature*
1.	Pump Pressure Hose Assembly
2.	Elbow
3.	Bushing Reducer
4.	Elbow
5.	Engine-Driven Hydraulic Pump
6.	Hose Elbow
7.	Hose Connection for Pump Drainpipe

g. Lift out the spacers, springs, spring retainer, and the pin.

h. Remove the seal rings, bearings, pins, drive gear, driven gear, and the body bearings.

3-118. ASSEMBLY OF ENGINE-DRIVEN HYDRAULIC PUMP.

a. Clean all parts with an approved solvent, and dry thoroughly with clean air.

b. Install the seal rings on the body bearing and slide the bearings into position.

c. Insert the drive gear and the driven gear into their respective positions, and install the cover bearings over the gear journals.

d. Install the two seal pins and seal rings.

e. Position the spacers, springs, spring retainer, and pin, then secure the cover to the body with washers and nuts.

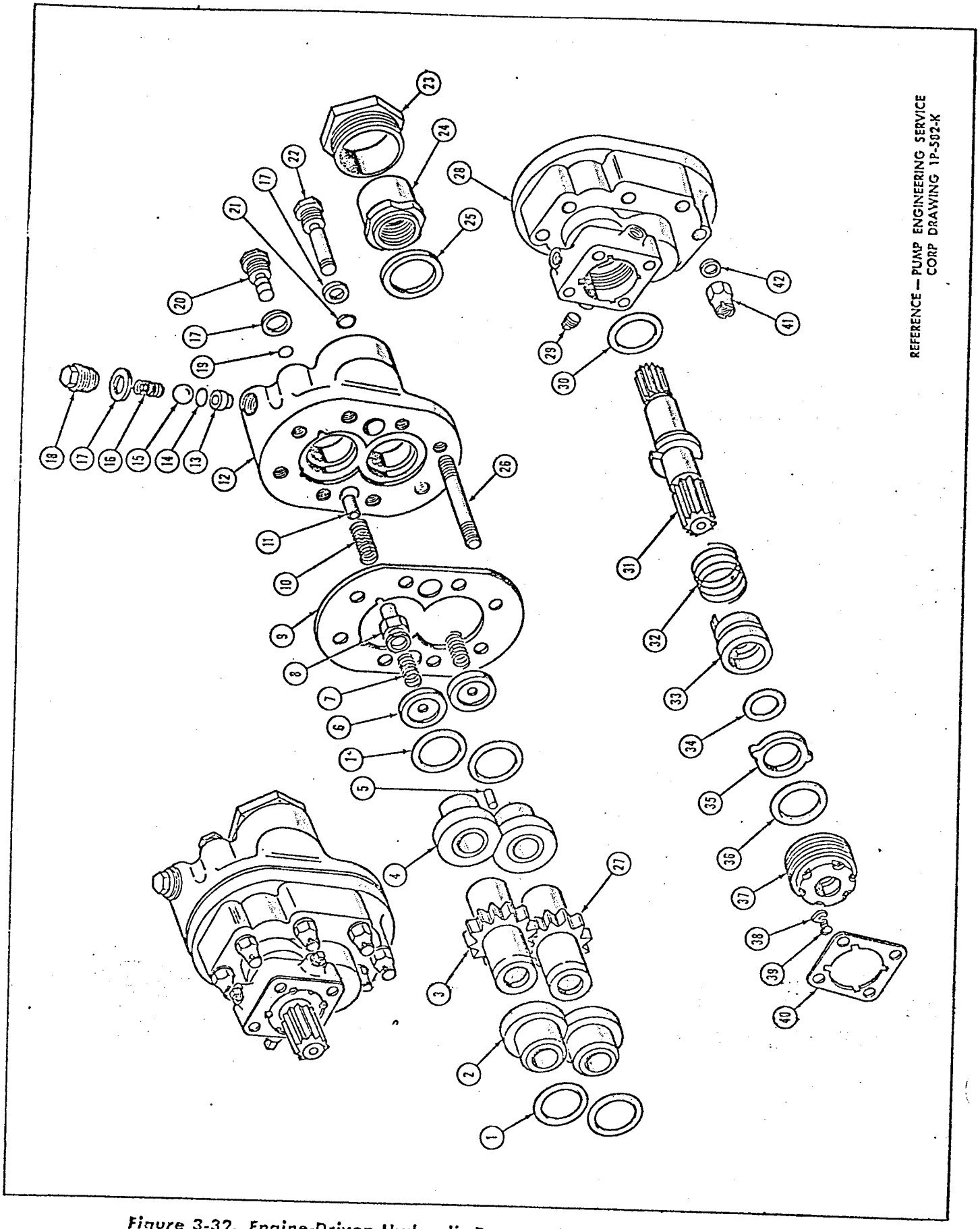

Figure 3-32. Engine-Driven Hydraulic Pump—Disassembled and Assembled

33,311

f. Position the seal ring on the seat, and insert the seat into the body, then install the ball, spring, gasket, and valve retainer.

g. Position the seal rings and the gaskets on the plugs, and install the plugs in their correct position of rotation.

h. Install the gasket, adapter, adapter nut, and tighten only to fingertightness.

i. Insert the seal rings in the retainer in the seal cup.

j. Install the driveshaft, seal cup, spring, seal disc, gasket, seal retainer, and lock plate, and secure with the screw.

3-119. INSTALLATION OF ENGINE-DRIVEN HYDRAULIC PUMP.

a. If a new pump is installed, drain the oil from the pump and flush with hydraulic fluid, Specification MIL-O-5606.

b. Wipe the engine mounting pad to remove any dirt. Turn the pump drive coupling with the fingers to test for freedom of operation.

c. Prior to installation, coat the drive coupling splines with anti-seize compound, Specification JAN-A-669. Apply a thin coat of the lubricant to all male threads. Keep the first thread free from all lubricant.

d. Note the direction of rotation of the engine drive and be sure that the rotation of the pump corresponds before installation.

e. Place the gasket on the mounting pad and mount the pump on the studs. Tighten the nuts evenly. If castle nuts are used, safety with steel lockwire. Self-locking nuts can be used in place of castle nuts.

f. Install the elbows in the pump ports. Install the flexible hoses and connect the drainpipe.

CAUTION

To prevent damage to the pump, and to keep air from entering the system, fill the two hoses with hydraulic fluid before attaching to the firewall disconnect valves.

g. Check the fluid supply pipe from the hydraulic reservoir to the pump for leaking connections. If leakage is found, tighten the connections moderately, but if this does not stop leakage, replace the connector or pipe.

3-120. HYDRAULIC FILTER.

(See figure 3-33.)

3-121. The hydraulic filter, located on the hydraulic control panel, consists of a head assembly, an element, an O-ring gasket, and a case. The head assembly incorporates two relief valves which are set to open and bypass the element at a pressure difference of 50 psi.

3-122. REMOVAL OF HYDRAULIC FILTER.

a. Disconnect and cap the pipes.

b. Remove the two bolts securing the filter to the supports and remove the filter.

3-123. DISASSEMBLY OF HYDRAULIC FILTER.

a. Cut and remove the safetywire.

b. Unscrew and remove the case from the head assembly.

Key to Figure 3-32

Item	Nomenclature	Item	Nomenclature
1.	Bearing Seal Ring	22.	Long Plug
2.	Body Bearing	23.	Nut
3.	Drive Gear	24.	Adapter
4.	Cover Bearing	25.	Gasket
5.	Pin	26.	Stud
6.	Spacer	27.	Driven Gear
7.	Spring	28.	Body
8.	Spring Retainer	29.	Pipe Plug
9.	Gasket	30.	Gasket
10.	Spring	31.	Drive Shaft
11.	Pin	32.	Spring
12.	Cover	33.	Seal Cup
13.	Valve Seat	34.	Seal Ring
14.	Seal Ring	35.	Seal Disc
15.	Ball	36.	Retainer Seal Ring
16.	Spring	37.	Seal Retainer
17.	Gasket	38.	Lock Plate
18.	Valve Retainer	39.	Screw
19.	Seal Ring	40.	Gasket
20.	Short Plug	41.	Nut
21.	Seal Ring	42.	Washer

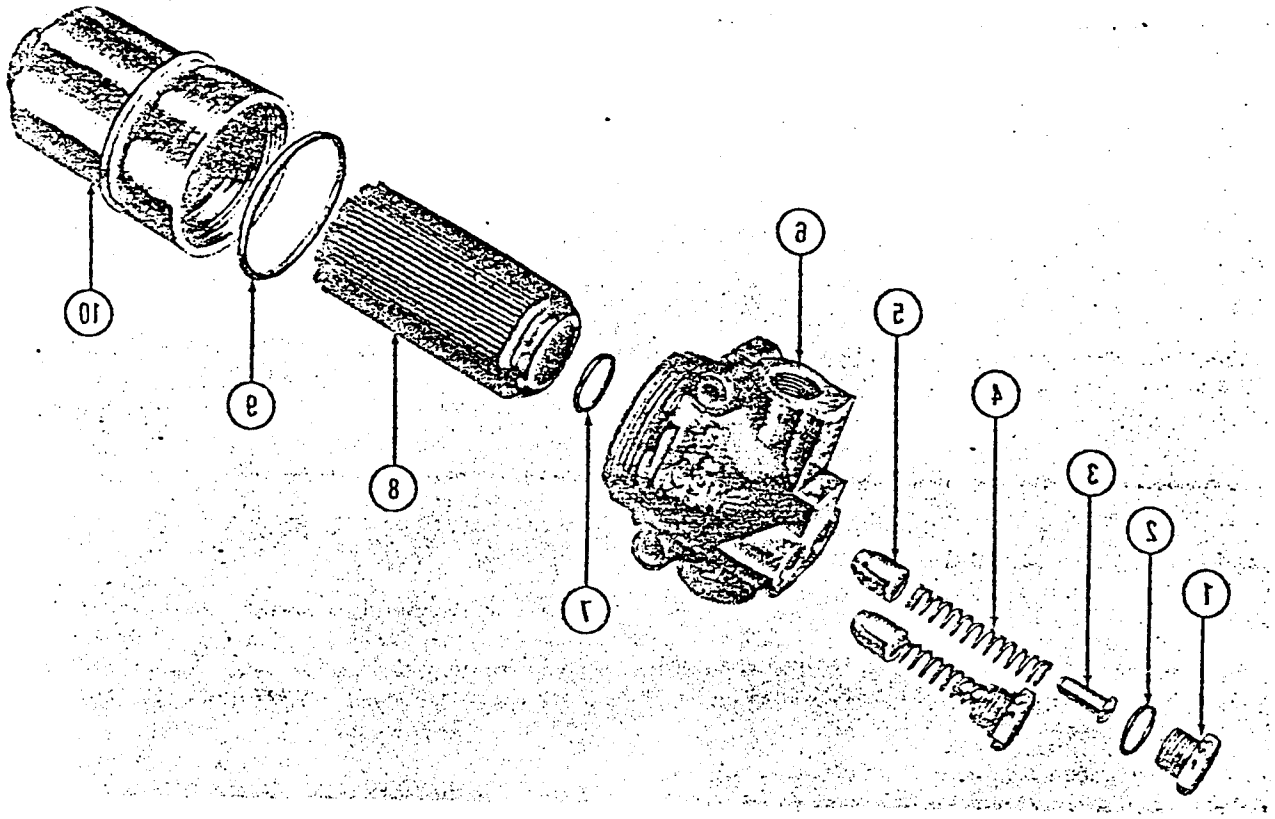

Figure 3-33. Hydraulic Filter

33,312

Key to Figure 3-33

Item	*Nomenclature*	*Item*	*Nomenclature*
1.	Cover Screw	6.	Head Assembly
2.	Gasket	7.	O-Ring Gasket
3.	Spring Guide	8.	Filter Element
4.	Spring	9.	O-Ring Gasket
5.	Piston	10.	Case

c. Remove the plug, gasket, spring guide, spring, and the piston.

3-124. ASSEMBLY OF HYDRAULIC FILTER.

a. Clean all parts thoroughly before assembly.

b. Install the piston, spring, spring guide, gasket, and plug. Safety the plug with lockwire.

c. Position the gasket and element, and secure the case to the head assembly. Safety with lockwire.

3-125. TEST PROCEDURE FOR HYDRAULIC FILTER. Check for external leaks by first applying 5 psi, and then 1500 psi at one of the ports with the other port plugged.

3-126. INSTALLATION OF HYDRAULIC FILTER.

a. Secure the filter to the support with two bolts.

b. Connect the pipes.

3-127. COWL FLAP HYDRAULIC SYSTEM.

3-128. GENERAL DESCRIPTION. *(See figure 3-34.)* Hydraulically actuated cowl flaps are attached to the aft edge of each engine antidrag ring to control the flow of air for engine cooling. The three flaps installed in the top segment are stationary on C-47A airplanes using the ram filtered-type air induction system. The center flap of the top segment is fixed on all other airplanes. The cowl flaps for each engine are operated by hydraulic control valves located on the right side panel and forward of the co-pilot's seat. Each control handle shows positions for CLOSE, OFF, TRAIL, OFF and OPEN. The actuating cylinder, located on the lower inboard segment of the engine antidrag ring, is connected to each movable cowl flap unit by a series of tie rods and actuating levers. To open the cowl flaps, the

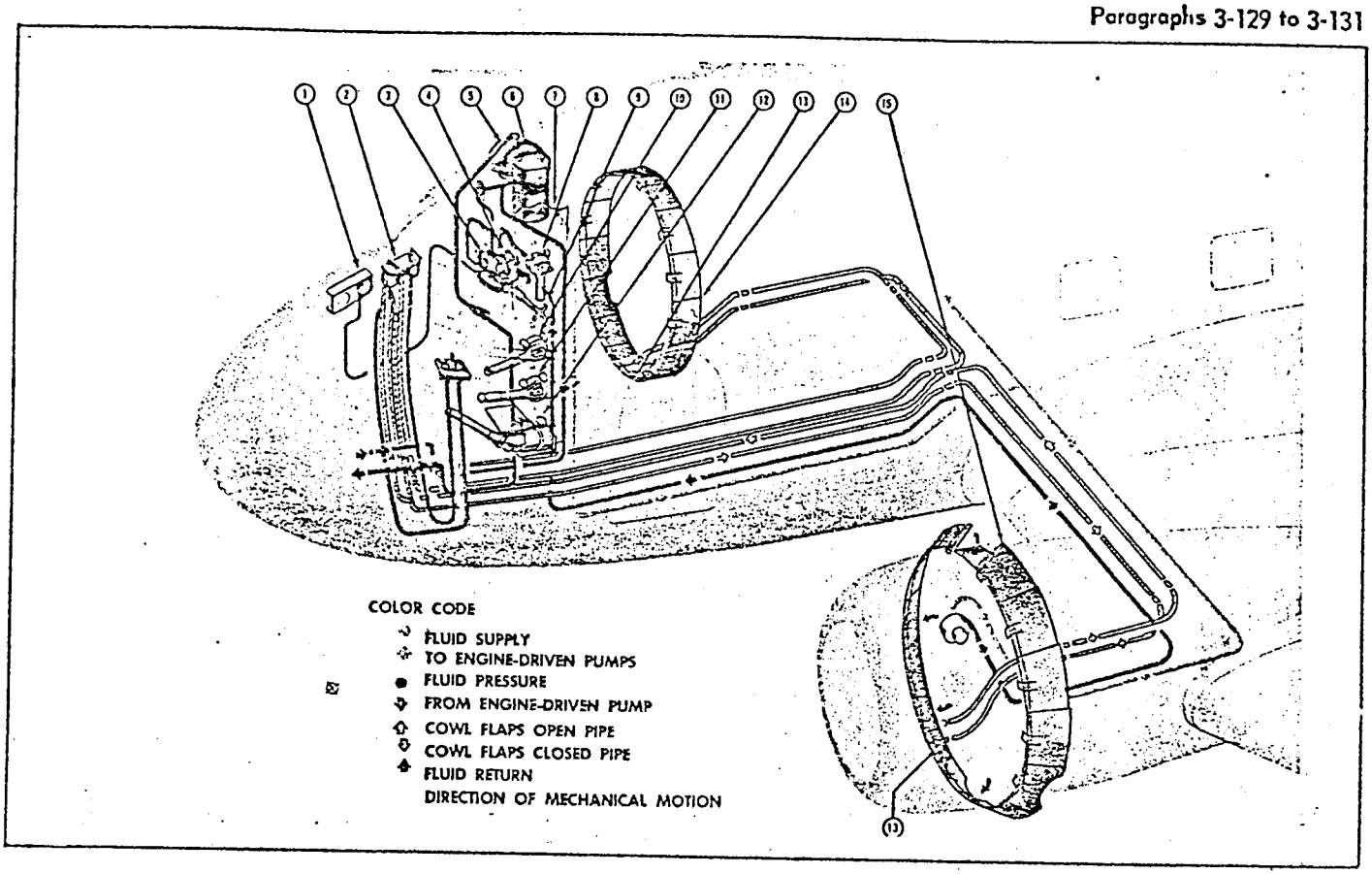

Figure 3-34. Cowl Flap Hydraulic System

33,313

Key to Figure 3-34

Item	Nomenclature	Item	Nomenclature
1.	Hydraulic System Pressure Gage	9.	Hand Pump Shutoff Valve
2.	Cowl Flap Control Valve Assembly	10.	Wing Flap Control Valve
3.	Hydraulic System Pressure Relief Valve	11.	Landing Gear Control Valve
4.	Hydraulic System Pressure Regulator	12.	Hydraulic Hand Pump
5.	Hydraulic System Pressure Accumulator	13.	Cowl Flap Actuating Cylinders
6.	Hydraulic System Fluid Reservoir	14.	Cowl Flaps (Closed)
7.	Hydraulic Control Panel	15.	Cowl Flaps (Open)
8.	Engine-Driven Hydraulic Pump Selector Valve		

control valve handle is moved to the OPEN position. Hydraulic fluid under pressure flows through the OPEN pipe to the proper actuating cylinder causing the flaps to open. The returning fluid from the actuating cylinder flows through the CLOSE pipe to the control valve and then into the return pipe to the hydraulic reservoir. In the CLOSE position, the hydraulic fluid flow is reversed, and the actuating cylinder, rods, and levers close the cowl flaps. In the OFF position, the fluid is trapped in the actuating cylinder, locking the cylinder piston in place to hold the flaps in any selected position. In the TRAIL position, both operating ports to the actuating cylinder are connected to the return port, allowing the piston to move in either direction depending on the balance of the airloads present on the cowl flaps.

3-129. REMOVAL AND INSTALLATION OF COMPONENTS OF COWL FLAP HYDRAULIC SYSTEM. Removal and installation of the components of the cowl flap hydraulic system are accomplished as outlined in the following paragraphs.

3-130. COWL FLAP CONTROL VALVES. *(See figures 3-35 through 3-37.)*

3-131. The cowl flap control valve assembly consists of two 4-way valves bolted to a bracket located on the right forward side of the flight compartment. Two types of valves are used, and the valve and bracket assemblies are interchangeable. The Adel valve assembly, installed on some C-47A airplanes, incorporates spring-loaded steel poppets to close the valve ports. The control valves, provided on all other airplanes,

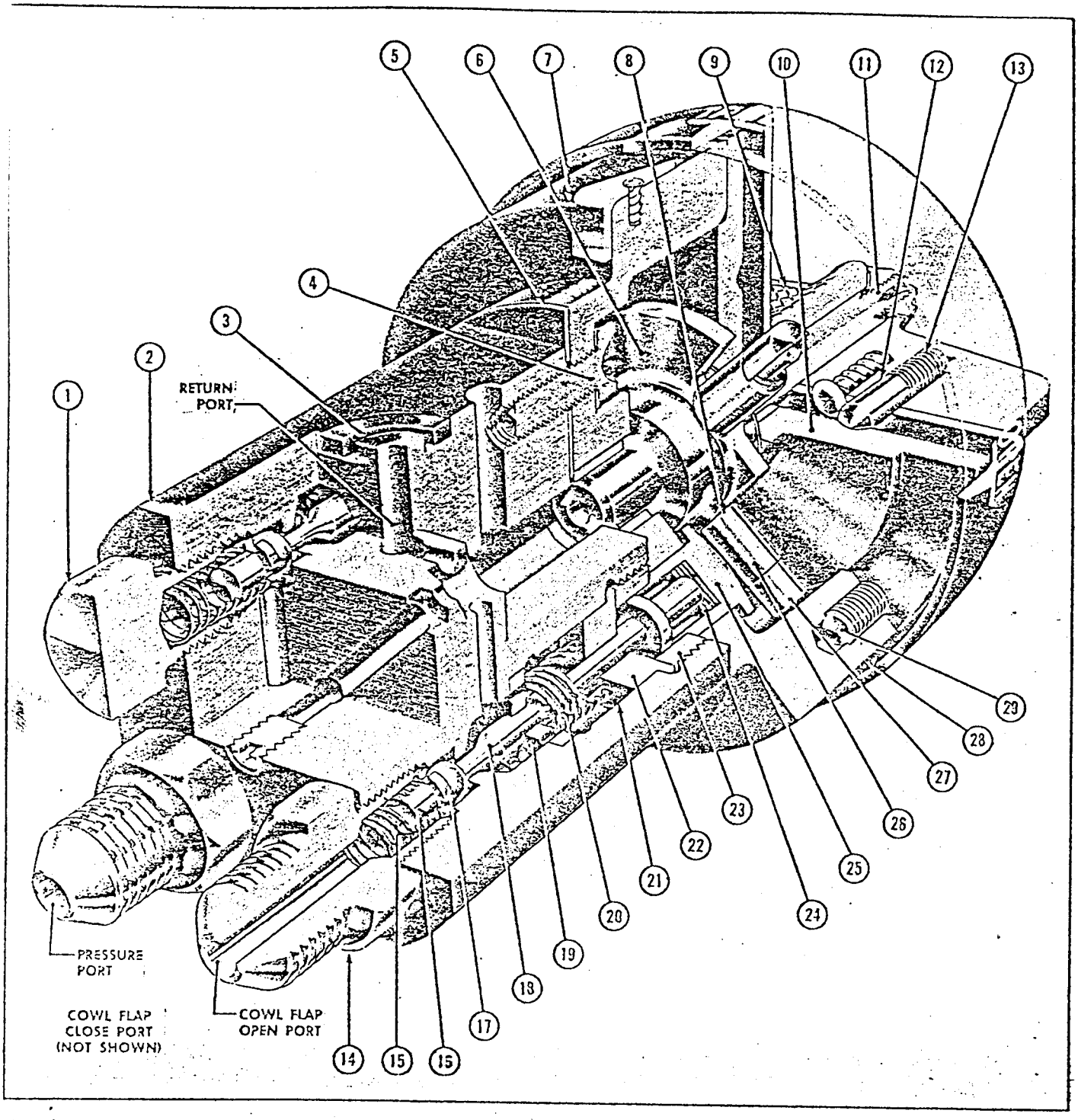

Figure 3-35. Cowl Flap Control Valve Assembly

33,314

include spring-loaded steel balls. The poppets or steel balls are moved by steel pins depressed by a cam rotor located in the head of the valve. The cam rotor is actuated by the control valve handle.

3-132. REMOVAL OF COWL FLAP CONTROL VALVE.

a. Relieve the hydraulic system pressure by operating the wing flaps.

b. Unsnap the flight compartment soundproof covering to gain access to the hydraulic piping.

c. Disconnect and cap the hydraulic pipes from the control valve.

d. Remove the bolts that attach the bracket to the fuselage.

e. Remove the control valve and bracket assembly.

3-133. TEST PROCEDURE FOR COWL FLAP CONTROL VALVE (SOME C-47A AIRPLANES). The test procedure for the cowl flap control valve is performed as outlined in table 3-13.

Key to Figure 3-35

Item	Nomenclature	Item	Nomenclature
1.	Plug	16.	Guide
2.	Body Assembly	17.	Steel Ball
3.	Washer	18.	Stem
4.	Screw and Lockwasher	19.	Retainer
5.	Plate	20.	Spring
6.	Rotor Assembly	21.	Packing Cup
7.	Indicator	22.	Guide
8.	*Washer	23.	Gland
9.	Handle Assembly	24.	**Shim
10.	Cover Assembly	25.	Tappet Head
11.	Cap Nut	26.	Roller Assembly
12.	Plunger	27.	Cap
13.	Spring	28.	Housing Assembly
14.	Fitting	29.	Screw, Lockwire
15.	Spring		

*Use to obtain end play for both rollers.
**Use to obtain proper height of tappet heads.

TABLE 3-13
TEST - COWL FLAP CONTROL VALVE (SOME C-47A)

Test Port	Ports Plugged	Handle Position	Test Pressure Psi	Maximum Leakage External	Maximum Leakage Internal
Pressure	None	OFF	1175	Relief valve must relieve pressure.	
Open	Pressure	OPEN	1200	None	10 drops an hour.
Close	Pressure	CLOSE	1200	None	10 drops an hour.
Pressure	All plugged	Any position.	1000	None	10 drops an hour.
Return	Open and Close	OPEN to CLOSE both ways.	125	None	10 drops an hour.

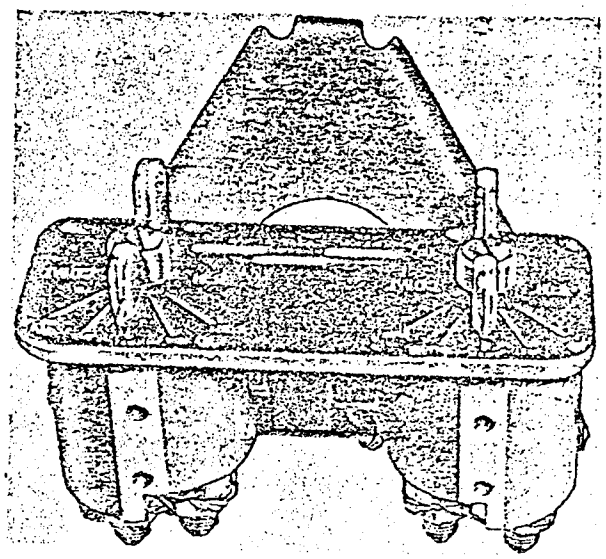

33,315

Figure 3-36. Cowl Flap Control Valve and Bracket Assembly (C-47A Airplanes)

3-134. TEST PROCEDURE FOR COWL FLAP CONTROL VALVE (LATE C-47 AND C-117 AIRPLANES). The test procedure for the cowl flap control valve is performed as outlined in table 3-14.

TABLE 3-14
TEST - COWL FLAP CONTROL VALVE
(LATE C-47 AND C-117)

Test Port	Ports Plugged	Handle Position	Test Pressure Psi	Maximum Leakage External	Maximum Leakage Internal
Pressure	None	OFF	1500	None	10 drops an hour.
Pressure	Open	OPEN	1000	None	10 drops an hour.
Pressure	Close	CLOSE	1000	None	10 drops an hour.
Return	Open, close, and pressure	Any position	125	None	1 drop an hour.

3-135. INSTALLATION OF COWL FLAP CONTROL VALVE.

a. Position the valve and bracket assembly, and bolt the bracket to the fuselage.

b. Remove the caps and connect the hydraulic pipes.

c. Replace the soundproof covering over the control valve piping.

d. Return the system pressure and check the control valve for proper operation.

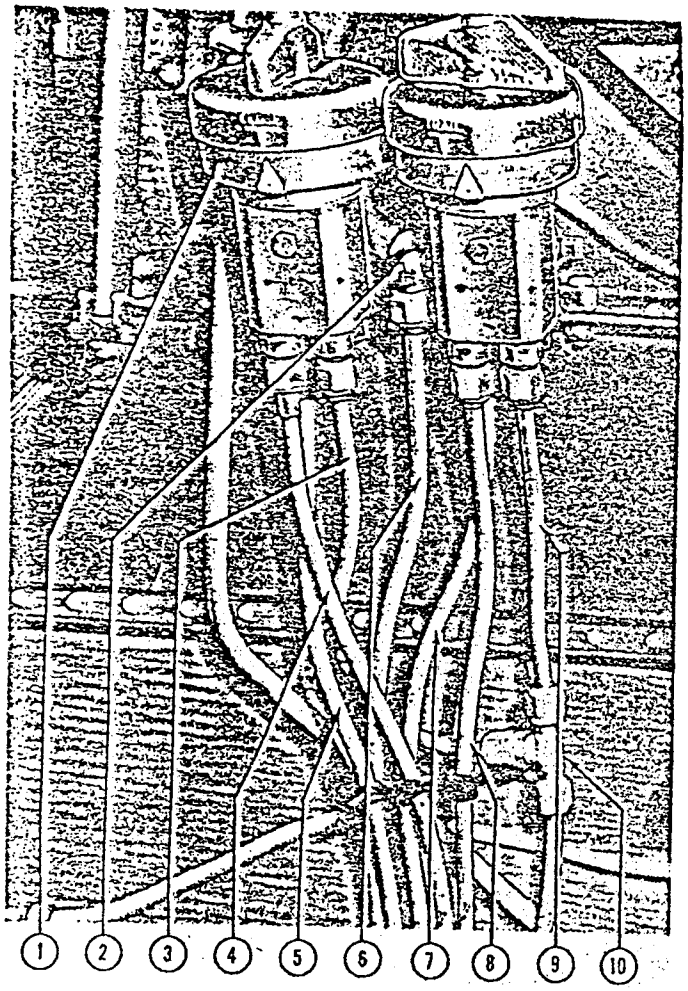

33,316

Figure 3-37. Cowl Flap Control Valve Assembly Installed

Key to Figure 3-37

Item	*Nomenclature*
1.	Valve and Bracket Assembly
2.	Elbow and Gasket
3.	Cowl Flap Pressure Pipe
4.	LH Cowl Flap Pressure Pipe
5.	LH Cowl Flap Open Pipe
6.	Cowl Flap Return Pipe
7.	RH Cowl Flap Open Pipe
8.	RH Cowl Flap Close Pipe
9.	Cowl Flap Pressure Pipe
10.	Tee

3-136 COWL FLAP ACTUATING CYLINDERS. *(See figures 3-38 and 3-39.)*

3-137. The cowl flap actuating cylinder contains a double-acting reciprocating piston, mounted in a bracket located on the lower inboard segment of the engine antidrag ring. Both ends of the piston assembly connect to the cowl flap tie rod and lever linkage, and movement of the piston assembly actuates the cowl flaps. Flexible hoses lead to the cylinder, and dust excluders are installed to protect the exposed ends of the piston from collecting dust and dirt. On early C-47 airplanes, the actuating cylinder assembly installed is of steel and incorporates packing cups. On late C-47 airplanes the cylinders are of duralumin, incorporating O-ring packings and a bronze wiper ring. The operation, function, and external appearance of the two cylinder types used are identical and interchangeable.

3 138. REMOVAL OF COWL FLAP ACTUATING CYLINDER.

a. Open the cowl flaps.

b. Relieve the hydraulic system pressure by operating the wing flaps.

c. Disconnect the cowl flap tie rods from each end of the piston rods.

d. Remove the dust excluders from each end of the cylinder.

e. Disconnect and cap the hydraulic hose connections.

f. Remove the two elbows from the cylinder.

g. Remove the mounting bolts from the bracket support and remove the cylinder.

3-139. TEST PROCEDURE FOR COWL FLAP ACTUATING CYLINDERS. The test procedure for the cowl flap actuating cylinders is performed as outlined in table 3-15.

TABLE 3-15
TEST - COWL FLAP ACTUATING CYLINDER.

Test Port	*Ports Plugged*	*Test Pressure Psi*	*Maximum Leakage*
A	None	1200	1 drop an hour past piston. 2 drops in 12 hours past the piston rod packing.
B	None	1200	1 drop an hour past piston. 2 drops in 12 hours past the piston rod packing.

3-140. ADJUSTMENT OF COWL FLAP ACTUATING CYLINDER.

a. Adjust the actuating cylinder in the support bracket.

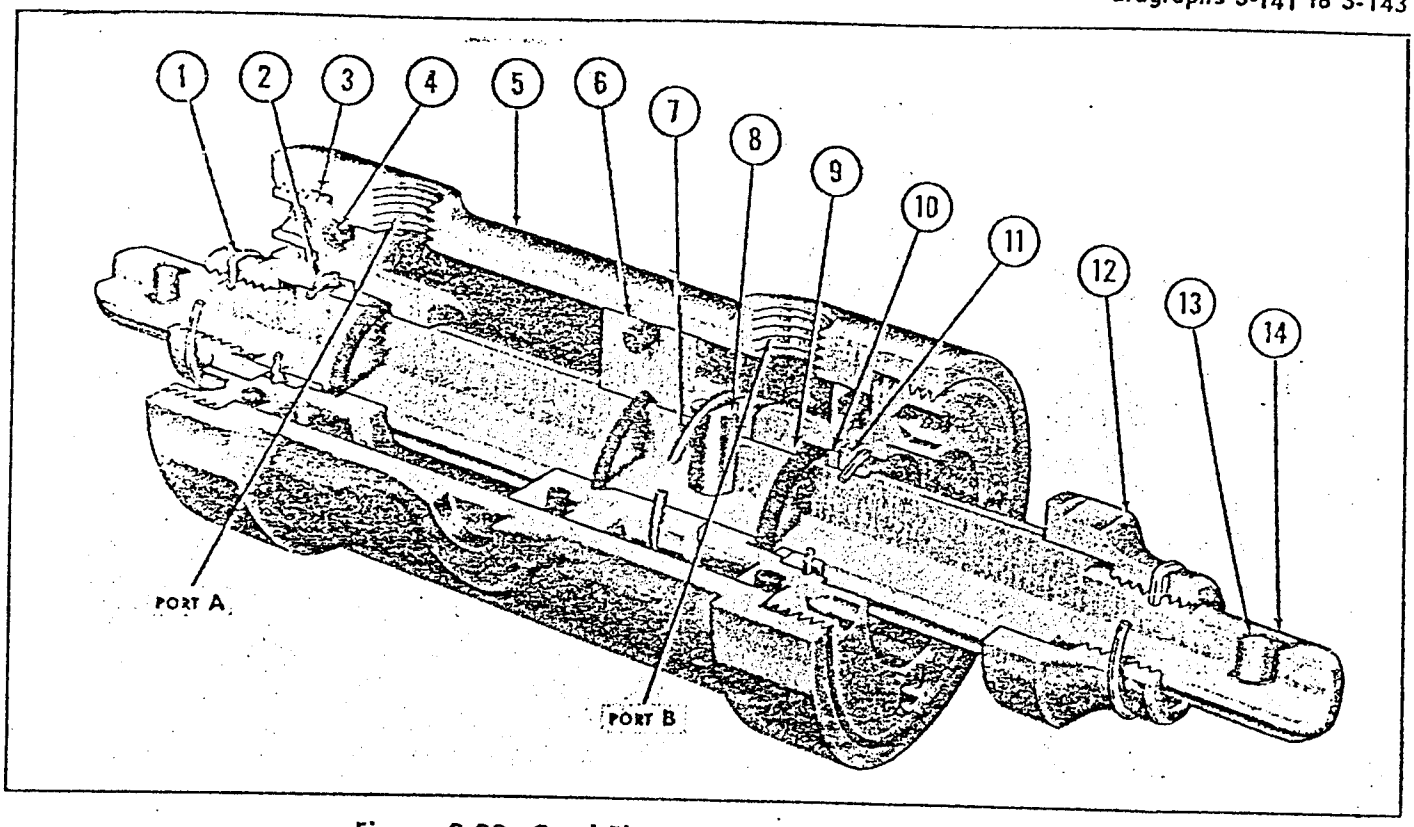

Figure 3-38. Cowl Flap Actuating Cylinder Assembly

33.317

Key to Figure 3-38

Item	Nomenclature	Item	Nomenclature
1.	Lock Ring	8.	Piston Pin
2.	Retainer Ring	9.	Packing (3 required)
3.	Cylinder End	10.	Spacer Ring
4.	Packing (3 required)	11.	Wiper (2 required)
5.	Cylinder Barrel	12.	Adjusting Nut
6.	Piston Head	13.	Piston Rod Bushing
7.	Retainer Ring	14.	Piston Rod

b. Position the mounting screws for the cylinder assembly to swing freely in the support bracket without side play.

c. Check the cylinder for end play.

d. If end play is detected, check the screw points and trunnion socket for wear.

e. Replace the screw or the cylinder, or both, if wear is detected.

3-141. INSTALLATION OF COWL FLAP ACTUATING CYLINDER.

a. Position the cylinder in the mounting bracket and secure the bolts.

b. Connect the two elbows to the cylinder.

c. Connect the hydraulic hose connections.

d. Install the dust excluders on each end of the cylinder.

e. Connect and fasten the cowl flap tie rods to the end of the piston rods.

f. Check the cylinder for proper operation.

3-142. WING FLAP HYDRAULIC SYSTEM.

3-143. GENERAL DESCRIPTION. *(See figures 3-40 through 3-42.)* The wing flaps are of the split trailing-edge type and are actuated by a hydraulic cylinder unit by means of a series of rods, rollers, and turnbuckles. The wing flaps are controlled by the wing flap control valve which is located on the hydraulic control panel. The position of the wing flaps is shown on the wing flap indicator located along the bottom edge of the main instrument panel forward of the pilot's seat. The wing flap relief valve is set to prevent lowering

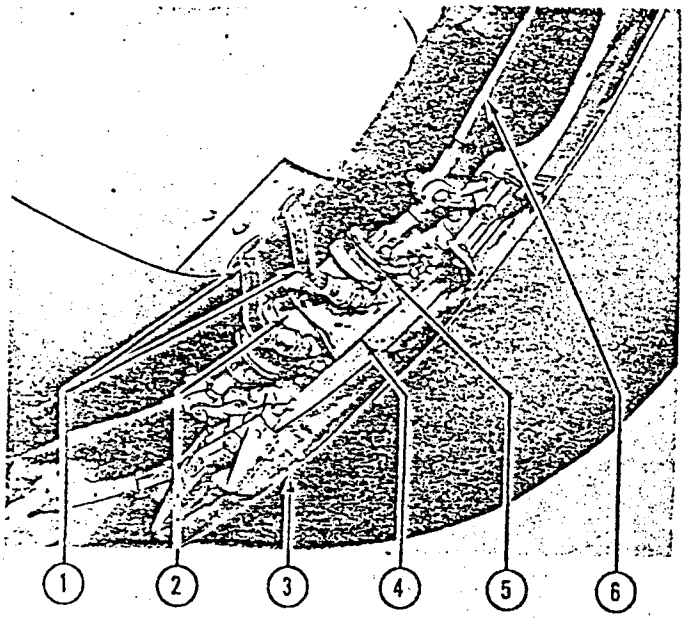

33,318

Figure 3-39. Cowl Flap Actuating Cylinder Installed

Key to Figure 3-39

Item	*Nomenclature*
1.	Flexible Hoses to Actuating Cylinder
2.	Cowl Flap Actuating Cylinder
3.	Cowl Flaps (open)
4.	Actuating Cylinder Mounting Bracket
5.	Dust Excluder
6.	Cowl Flap Operating Rod

of the wing flaps at an indicated airspeed greater than 112 mph.

Note

When the airplane is on the ground the control handle will be in the UP position at all times, so that excess fluid pressure in the wing flap hydraulic system, caused by thermal expansion, is relieved through the wing flap operating pipes connected to the hydraulic pressure and return manifolds.

3-144. REMOVAL, DISASSEMBLY, ASSEMBLY, AND INSTALLATION OF WING FLAP HYDRAULIC SYSTEM COMPONENTS. Removal, disassembly, assembly, and installation of the wing flap hydraulic system components are accomplished as outlined in the following paragraphs.

3-145. WING FLAP HYDRAULIC SYSTEM CONTROL VALVE.
(See figure 3-43.)

3-146. The wing flap hydraulic system control valve, located on the hydraulic panel above the hydraulic hand pump in the flight compartment, controls the flow of fluid to the wing flap actuating cylinders. This valve is identical to the landing gear control valve, with the exception of the operation time setting. The valves are constructed so that hydraulic fluid pressure from the system pressure manifold can be directed to either end of the wing flap actuating cylinder, or the fluid flow to the actuating cylinder can be entirely blocked off.

3-147. REMOVAL OF WING FLAP HYDRAULIC SYSTEM CONTROL VALVE.

a. Relieve the hydraulic system pressure by operating the wing flaps.

Note

Before relieving the hydraulic pressure, be sure that the handle of the wing flap control valve is in the NEUTRAL position.

b. Disconnect and cap the four hydraulic pipes from the wing flap control valve.

c. Remove the bolts attaching the control valve to the hydraulic control panel and remove the control valve from the airplane.

3-148. DISASSEMBLY OF WING FLAP HYDRAULIC SYSTEM CONTROL VALVE.

a. Remove the handle assembly.

Key to Figure 3-40

Item	*Nomenclature*	*Item*	*Nomenclature*
1.	Hydraulic System Pressure Gage	10.	Hydraulic Control Panel
2.	Wing Flap Indicator	11.	Hand Pump Shutoff Valve
3.	Wing Flap Relief Valve Assembly	12.	Wing Flap Control Valve
4.	Check Valve	13.	Landing Gear Control Valve
5.	Hydraulic System Pressure Relief Valve	14.	Hydraulic Hand Pump
6.	Hydraulic System Pressure Regulator	15.	Orifice Check Valve
7.	Hydraulic System Pressure Accumulator	16.	Wing Flaps
8.	Hydraulic System Fluid Reservoir	17.	Wing Flap Actuating Cylinder
9.	Engine-Driven Hydraulic Pump Selector Valve		

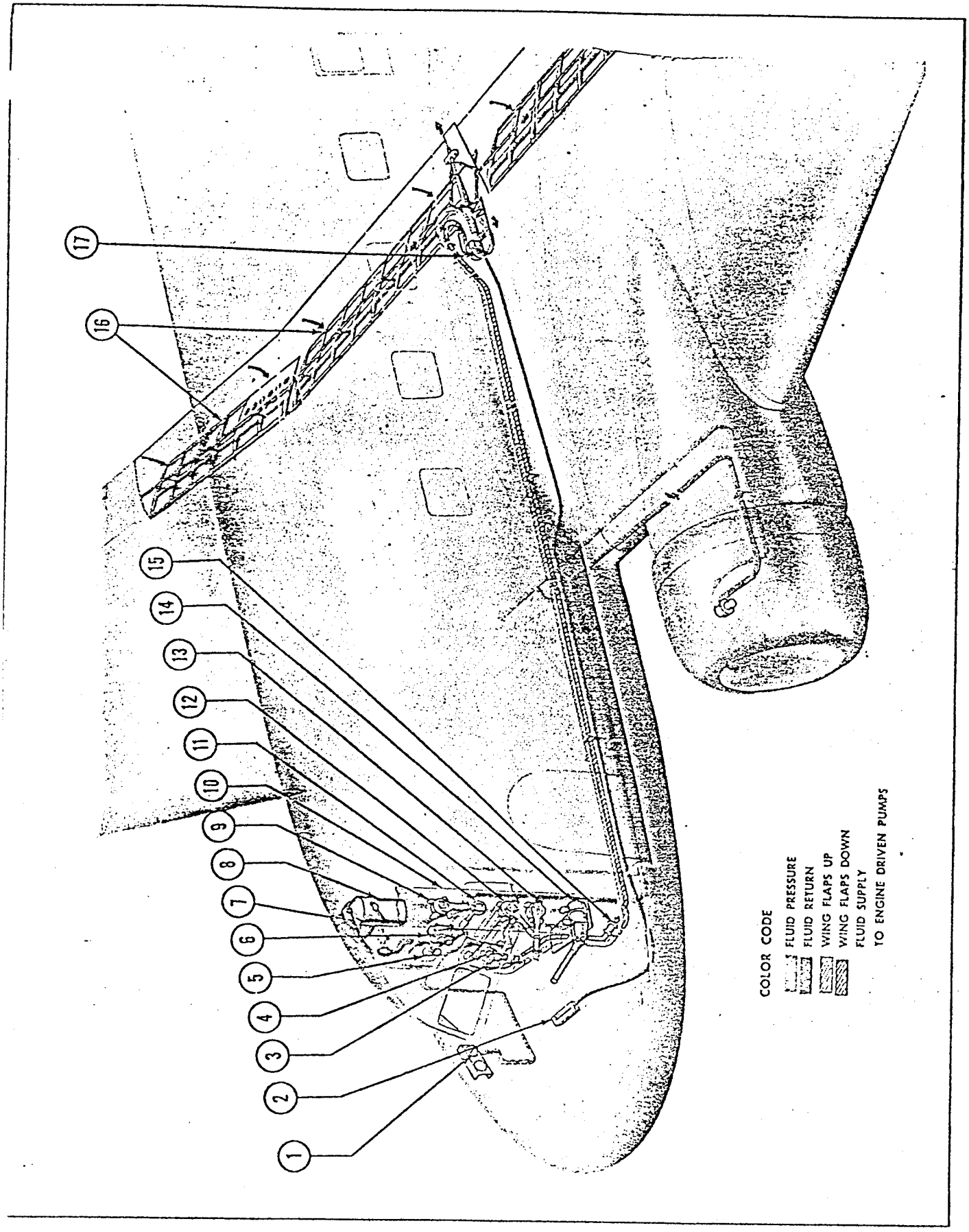

Figure 3-40. Wing Flap Hydraulic System

33.3·9

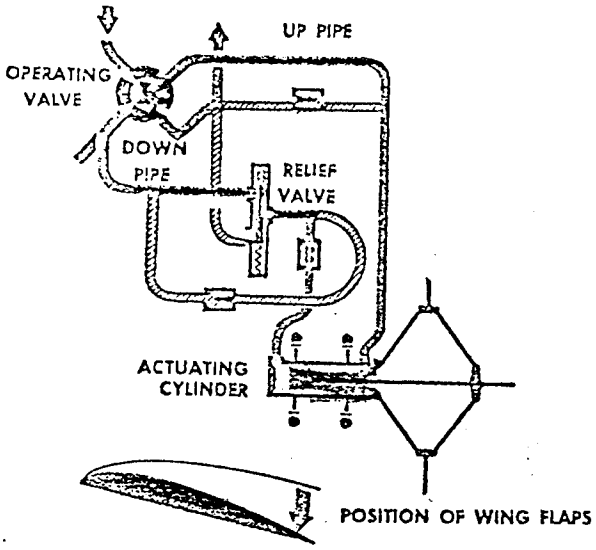

NORMAL DOWN FLOW:
The DOWN position of the operating valve handle directs the fluid pressure in the down pipe. Valve piston remains in normal position allowing down flow unless down pipe pressure exceeds approximately 485 pounds per square inch. Wing flaps move down.

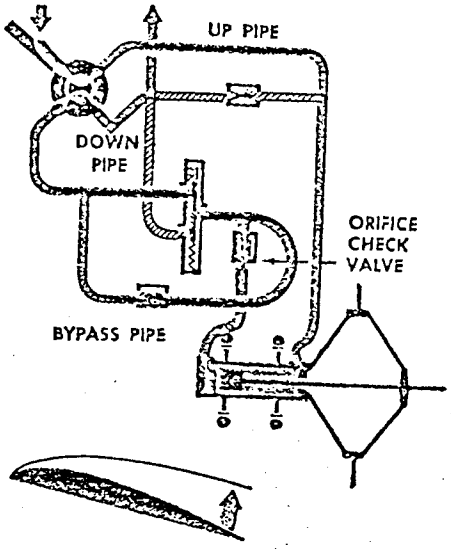

NORMAL RETURN FLOW:
The bypass pipe is an emergency measure for almost instantaneous return of relief valve piston to its normal position. When by-pass pipe flows (as in the previous diagram) the pressure drop in the down pipe allows the spring to raise relief valve piston. Normal return flow of fluid results.

COLOR CODE:

PRESSURE
PRESSURE FLOW
RETURN
RETURN FLOW

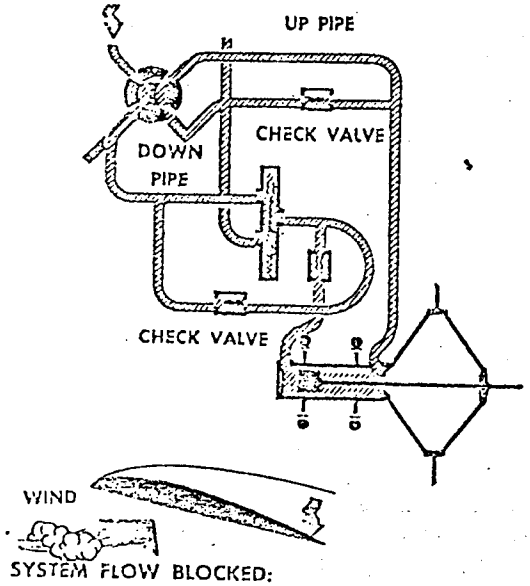

SYSTEM FLOW BLOCKED:
The DOWN position of the operating valve handle directs fluid pressure into the down pipe. Wing flaps move down. Back pressure in down pipe caused by strong wind resistance on wing flaps forces down the relief valve piston blocking entire system flow. Downward movement of wing flaps is halted.

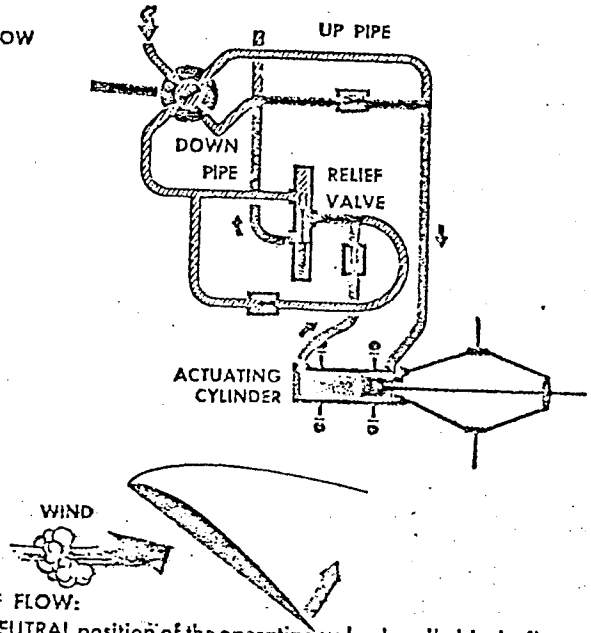

RELIEF FLOW:
The NEUTRAL position of the operating valve handle blocks flow in wing flap system. Strong wind resistance on wing flaps causes fluid back pressure to flow through relief port. Wind raises wing flaps until back pressure is relieved. Note: When wing flaps are entirely down, mechanical leverage prevents wind load from forcing them up.

Figure 3-41. Wing Flap Hydraulic System — Normal Flow

33,320

b. Compress and remove the snap ring.

c. Remove the shaft and O-ring. The shaft retainer can be removed with the shaft.

Note

For repairing leaks at the shaft, no further disassembly is required and removal of the valve from the airplane is not necessary. Inspect the shaft groove and body bore for damaged parts, and replace if necessary.

d. Remove the six fillister-head screws and lockwashers from the back of the base plate.

e. Remove the base plate while holding the valve so that the shaft end points down. (This action prevents dropping the internal parts which can be lost or damaged.)

f. Remove the large O-ring.

g. Remove the porting plate.

h. Remove the four shear seals with a hooked wire.

i. Remove the four spring washers.

3-149. MAINTENANCE OF WING FLAP HYDRAULIC SYSTEM CONTROL VALVE.

a. Examine the sealing surfaces of the body bores contacting the O-rings. Surface areas must be smooth and free of all nicks and scratches.

b. Examine the vee-groove on the shaft. It must be free of nicks and scratches. Slight scratches can be removed with a fine emery or crocus cloth.

c. Examine the porting plate carefully. The flat surface contacting the shear seals must be smooth and polished. Minute scratches can be removed by lapping, using a fine compound, against a flat metal surface. No scratches are permissible.

d. Examine the shear seals. The surfaces contacting the porting plate must be flat and polished. Remove slight scratches, using a fine compound, by carefully lapping against a flat metal surface. The bottom of the O-ring groove must be smooth and free of nicks or scratches. Replace shear seals when overall height is decreased by wear to 0.240 inch or less.

e. Examine the spring washers. Replace any deformed or broken springs.

f. Examine all O-rings. Never install a used O-ring.

g. Check the area of base plate contacting O-ring for smoothness. No nicks or scratches are permissible. Wear on the area contacting the porting plate must not exceed 0.015 inch in depth.

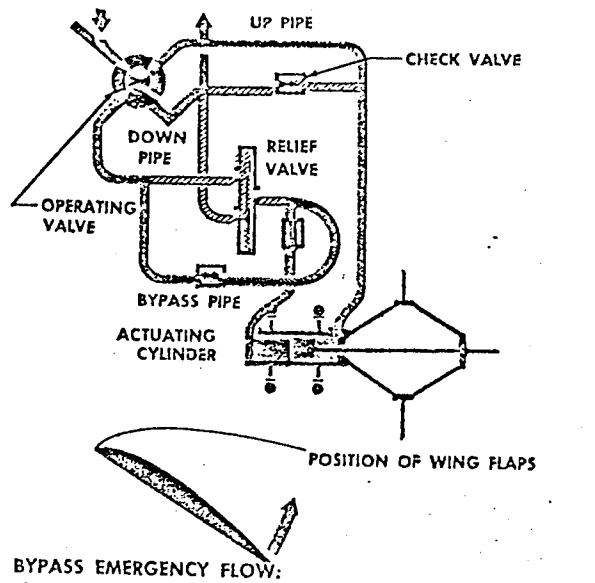

BYPASS EMERGENCY FLOW:
The operating valve handle in the UP position directs fluid pressure into the up pipe. If pressure in the down pipe has not been relieved, relief valve piston will not return to its normal position. Since the relief valve is closed, the entire down pipe return flow routes through bypass pipe to reservoir. Wing flaps start up.

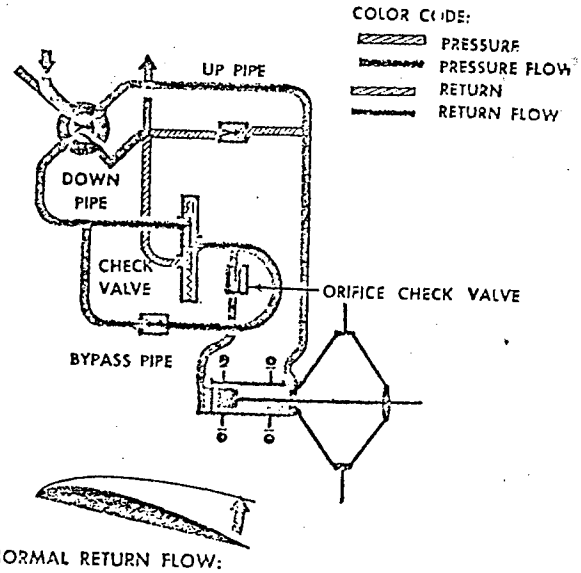

NORMAL RETURN FLOW:
The UP position of the operating valve handle directs the fluid pressure into the up pipe. Wing flaps move up. The orifice check valve restricts the return flow of fluid from the actuating cylinder adding a time lag which prevents rapid raising of wing flaps and consequent sudden loss of lift in flight.

Figure 3-42. Wing Flap Hydraulic System — Bypass Flow 33.321

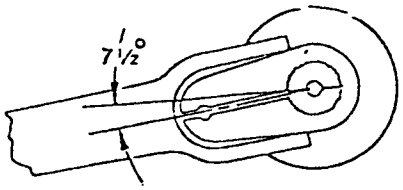

ALIGN SCRIBED MARK ON VALVE SHAFT WITH UPPER SIDE OF SLOT IN WING FLAP VALVE HANDLE. PLACE WING FLAP VALVE HANDLE IN NEUTRAL POSITION AND BUILD UP HYDRAULIC PRESSURE BY OPERATING HYDRAULIC HAND PUMP UNTIL IT IS DIFFICULT TO OPERATE (HAND PUMP SHUTOFF IN CLOSED POSITION).

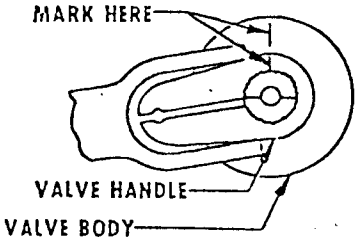

PLACE A PENCIL MARK 90° CLOCKWISE FROM SCRIBED MARK ON SHAFT VALVE HANDLE AND MAKE A CORRESPONDING MARK ON VALVE BODY.

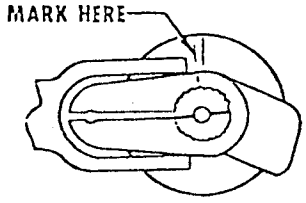

MAINTAIN PRESSURE ON HAND PUMP HANDLE AND SLOWLY MOVE THE VALVE HANDLE TO DOWN POSITION UNTIL A SLIGHT MOVEMENT IS NOTED ON THE HYDRAULIC HAND PUMP HANDLE. THIS INDICATES THE START OF OPENING OF THE VALVE. PLACE A PENCIL MARK ON THE VALVE BODY TO CORRESPOND WITH THE PENCIL MARK ON THE VALVE HANDLE. RETURN VALVE HANDLE TO NEUTRAL POSITION AND BUILD UP HYDRAULIC PRESSURE BY OPERATING HYDRAULIC HAND PUMP UNTIL IT IS DIFFICULT TO OPERATE.

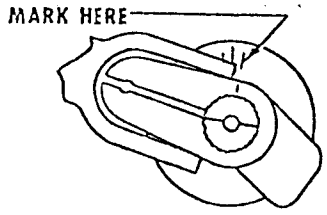

MAINTAIN PRESSURE ON HAND PUMP HANDLE AND SLOWLY MOVE THE VALVE HANDLE TO UP POSITION UNTIL A SLIGHT MOVEMENT IS NOTED ON THE HYDRAULIC HAND PUMP HANDLE. THIS INDICATES THE START OF OPENING OF THE VALVE. PLACE A PENCIL MARK ON THE VALVE BODY TO CORRESPOND WITH PENCIL MARK ON VALVE HANDLE.

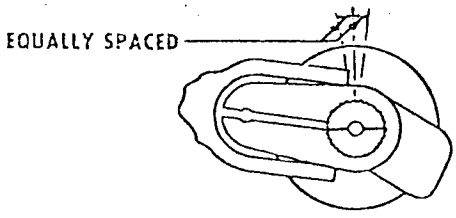

PENCIL MARKS ON BODY SHOULD BE EQUALLY SPACED. UNEQUAL SPACING INDICATES IMPROPER TIMING OF VALVE OPENING AND HANDLE SHOULD BE RELOCATED ON SERRATIONS TO CORRECT TIMING OF VALVE OPENING.

33,322

Figure 3-43. Timing Wing Flap Control Valve (Late C-47 and C-117 Airplanes)

3-150. TEST PROCEDURE FOR WING FLAP CONTROL VALVE. The test procedure for the wing flap control valve is performed as outlined in table 3-16.

TABLE 3-16

TEST - WING FLAP CONTROL VALVE

To Test	Apply Pressure at	Plug Port	Applied Pressure Psi	Shaft Position	Maximum Allowable Leakage
Seals and seats at A, B, and D	B 31	A and D 24	1000 4/4	As shown in detail A or B. 4/6	10 drops an hour at C. 1
Seal and seat at B	B	A and D	2000	Midway between detail A and B.	10 drops an hour at C.
Seals and seats at A, C, and D	C	A and D	1000	As shown in detail A or B.	10 drops an hour at B.
Seal and seat at C	C	A and D	2000	Midway between positions in detail A and B.	10 drops an hour at B.
For external leakage.	C	A, B, and D	1000 and 5 to 7	20° (±10°) clockwise from position in detail A and B.	10 drops in 48 hours — external.

3-151. ASSEMBLY OF WING FLAP HYDRAULIC SYSTEM CONTROL VALVE.

a. Lubricate the O-ring.

b. Install the shaft, inserting it carefully to prevent damage to the O-ring.

c. Insert the shaft retainer.

d. Install the snap ring.

e. Insert a spring washer in each of the ½-inch holes of the body.

f. Insert four seals, chamfered ends out, with the associated O-rings.

g. Install the porting plate over the milled end of the shaft.

h. Install the large O-ring.

i. Secure the plate in position with six screws and lockwashers.

3-152. INSTALLATION OF WING FLAP HYDRAULIC SYSTEM CONTROL VALVE.

a. Fasten the control valve to the hydraulic control panel using the bolts and lockwashers.

b. Connect the four hydraulic pipes to the elbows of the control valve.

3-153. WING FLAP HYDRAULIC SYSTEM ACTUATING CYLINDER.
(See figures 3-44 through 3-47.)

3-154. The wing flap actuating cylinder is mounted on rollers and is located in the control tunnel of the center wing. Supports carrying the rollers are clamped to each end of the cylinder. The rollers operate on rails which are mounted in the tunnel area. Four rods connected to the piston and actuating cylinder form a variable parallelogram, and are also attached to the push-pull rods, located in the wing area, which are connected to the wing flaps by rods and turnbuckles. When the actuating cylinder extends, the cylinder moves forward on the rollers producing an equalized force through the operating rods, and pulling the push-pull rods inward to lower the wing flaps. When the piston and cylinder retract, the push-pull rods are forced outward to raise the wing flaps.

3-155. REMOVAL OF WING FLAP HYDRAULIC SYSTEM ACTUATING CYLINDER.

a. Relieve the hydraulic system pressure by operating the wing flaps.

b. Remove the cover plate from the lower surface of the center wing section to gain access to the cylinder.

c. Disconnect and cap the hydraulic pipes from the cylinder.

d. Disconnect the wing flap indicator wire from the wing flap cylinder.

e. Disconnect the rods attached to the piston rod and cylinder.

f. Remove the roller bolts from one side of the cylinder and remove the rollers.

g. Remove the bolt from the auxiliary bearing on the piston rod.

h. Move the cylinder forward and up until it can be removed by backing it down and out through the cutout in the rib.

Note

Do not remove the roller supports from the actuating cylinder, as these are adjusted at the factory to insure proper alignment with the piston rod bearings.

3-156. DISASSEMBLY OF WING FLAP HYDRAULIC SYSTEM ACTUATING CYLINDER (C-47A AND EARLY C-47B AIRPLANES).

a. Use a suitably shaped clamp to prevent distortion of the cylinder barrel when securing the cylinder

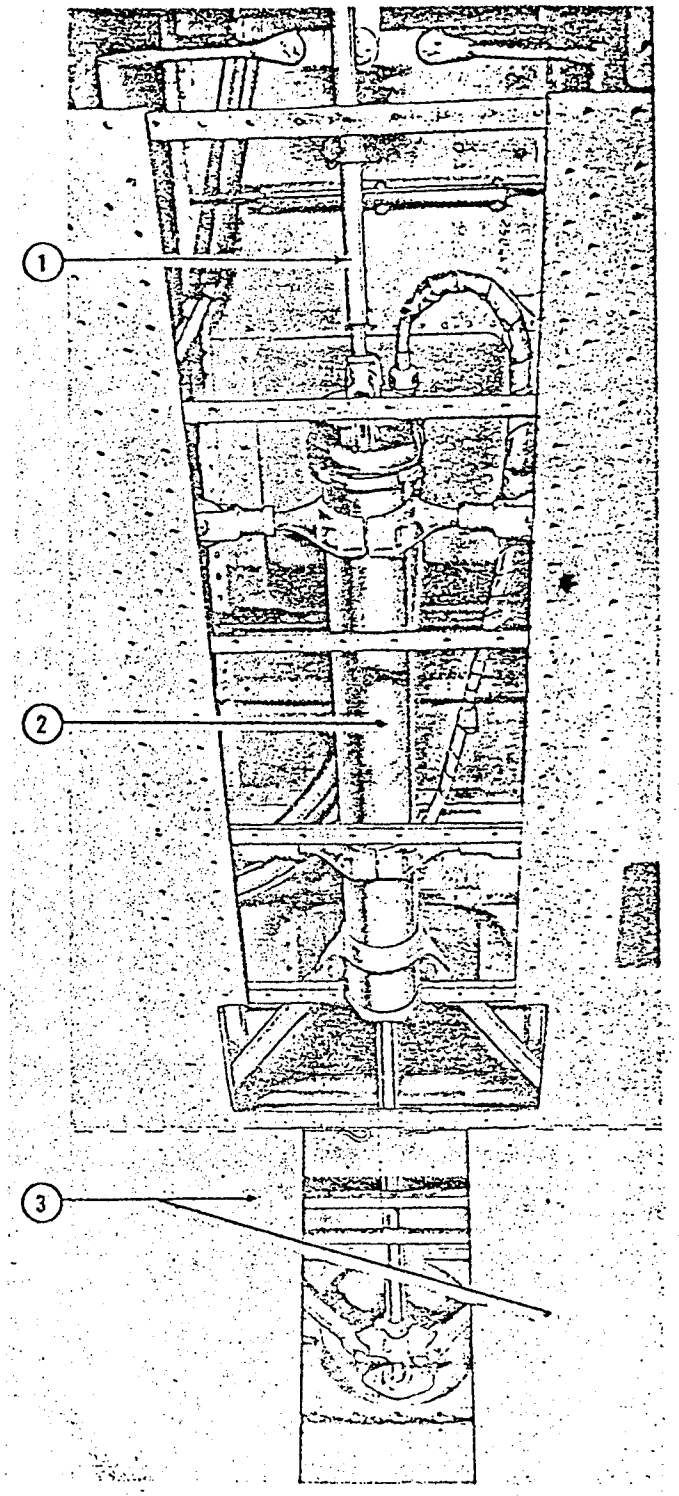

33,323

Figure 3-44. Wing Flap Actuating Cylinder—Installed

Key to Figure 3-44

Item	*Nomenclature*
1.	Wing Flap Indicating Wire
2.	Wing Flap Actuating Cylinder
3.	Wing Flaps

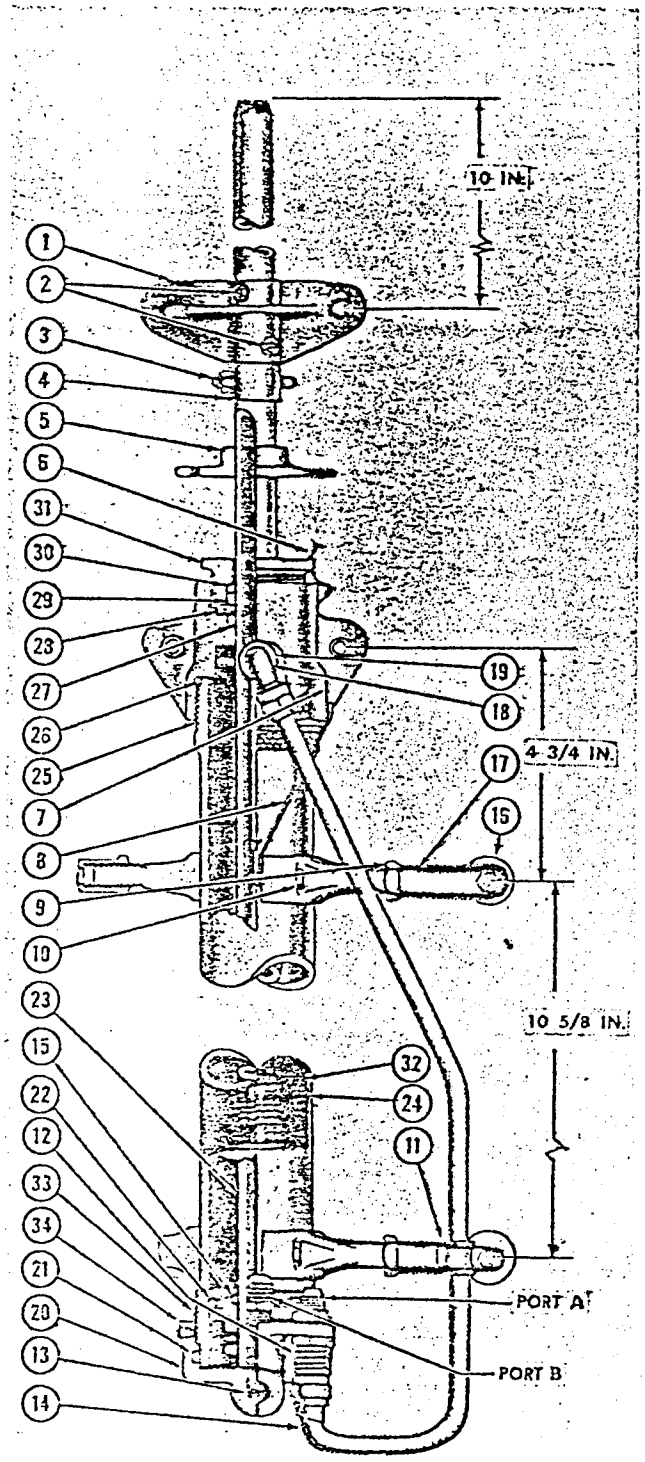

14,342

Figure 3-45. Wing Flap Actuating Cylinder Assembly (Late C-47B and C-117 Airplanes)

Key to Figure 3-45

Item	*Nomenclature*
1.	Block
2.	Pin
3.	Pin
4.	Collar
5.	Bearing
6.	Lockwire
7.	Base
8.	Lockwire
9.	Nut
10.	Bolt
11.	Clip
12.	Bulkhead Union
13.	Hex Plug
14.	Pipe
15.	Bolt, Washer, Nut, Cotter Pin
16.	Roller
17.	Support
18.	Elbow
19.	Ring
20.	Cap
21.	O-Ring Gasket
22.	O-Ring Packing
23.	Piston Assembly
24.	Cylinder
25.	Base Assembly Lockwire
26.	O-Ring Gasket
27.	O-Ring Packing
28.	Retainer
29.	Wiper
30.	Wiper
31.	Nut Lockwire
32.	Decal
33.	Gasket
34.	Cap

in a vise. The clamp can be formed of two pieces of rubber-lined hardwood extending the length of the barrel and encircling it to insure that the clamping pressure is distributed evenly over the entire area of the cylinder barrel. Place the clamp in a vise and tighten until the cylinder barrel is held securely.

b. Cut the lockwire and unscrew the piston rod packing nut, using Douglas service tool No. K20001.

c. Remove the washers, packing, and the packing rings.

d. Unscrew the cylinder base.

e. Remove and disassemble the piston assembly.

f. Cut the lockwire and unscrew the packing nut from the cylinder cap. Remove the cylinder cap.

3-157. DISASSEMBLY OF WING FLAP HYDRAULIC SYSTEM ACTUATING CYLINDER (LATE C-47B AND C-117 AIRPLANES).

a. Place the cylinder in a suitable clamp as described in paragraph 3-156, step a.

b. Cut the lockwire and unscrew the piston rod retaining nut.

c. Remove the wipers, retaining ring, and packing rings.

Key to Figure 3-46

Item	Nomenclature
1.	Block
2.	Pin
3.	Pin
4.	Collar
5.	Bearing
6.	Lockwire
7.	Nut
8.	Washer
9.	Linear Packing
10.	Ring
11.	Gasket
12.	Base
13.	Lockwire
14.	Nut
15.	Bolt
16.	Clip
17.	Cylinder
18.	Piston Assembly
19.	Bulkhead Union
20.	Spacer
21.	Linear Packing
22.	Nut
23.	Ring
24.	Gasket
25.	Bearing
26.	Cotter
27.	Cap
28.	Hex Plug
29.	Pipe
30.	Bolt
31.	Roller
32.	Support
33.	Elbow
34.	Ring
35.	Washer
36.	O-Ring Packing

d. Unscrew the cylinder base.

e. Remove and disassemble the piston assembly.

f. Remove the lockscrews from the cylinder cap and remove the cylinder cap.

g. Remove the rubber plug from the cylinder cap lockscrew holes.

3-158. MAINTENANCE OF WING FLAP HYDRAULIC SYSTEM ACTUATING CYLINDERS.

a. External fluid leakage of the wing flap cylinder can be remedied on C-47A and early C-47B airplanes, by moderate tightening of the packing nut, using Douglas service tool No. K20001. On late C-47B and C-117 airplanes, replace the O-rings in the cylinder.

b. Replace damaged or improperly functioning actuating cylinder.

3-159. TEST PROCEDURE FOR WING FLAP HYDRAULIC SYSTEM ACTUATING CYLINDER. The test procedure for the wing flap hydraulic system actuating cylinder is performed as outlined in the table 3-17.

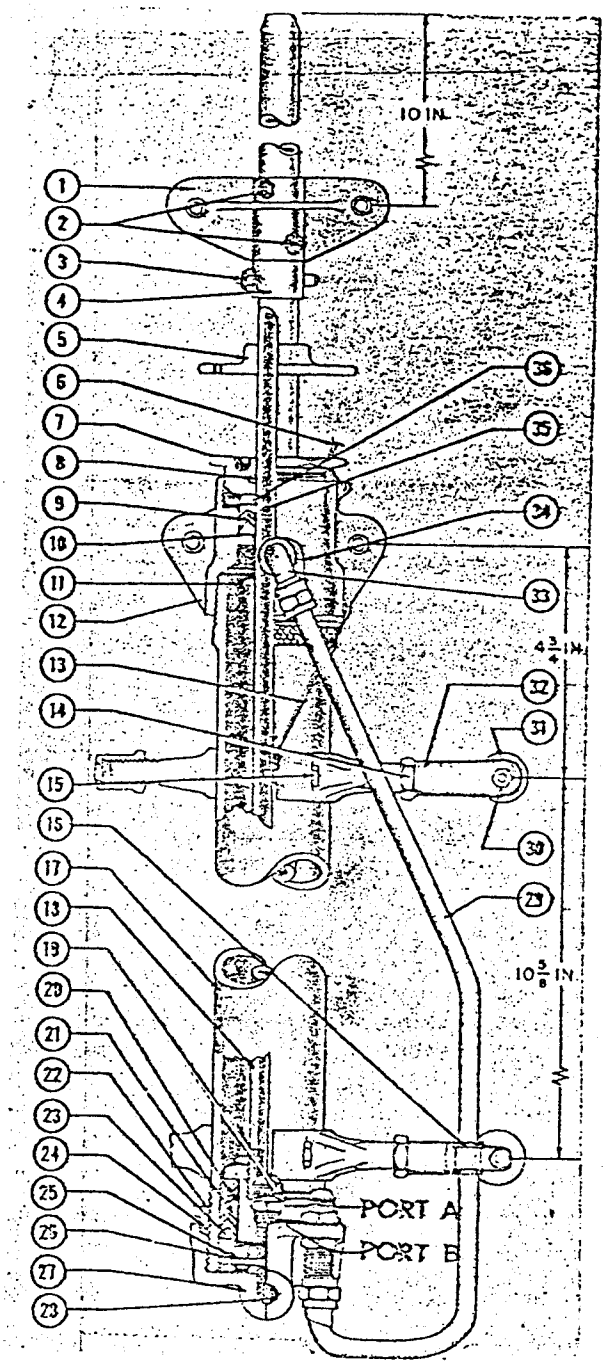

Figure 3-46. Wing Flap Actuating Cylinder Assembly (C-47A and Early C-47B Airplanes) 33,324

TABLE 3-17
TEST - WING FLAP HYDRAULIC SYSTEM ACTUATING CYLINDER

Test Port	Piston Position	Test Pressure Psi	Maximum Leakage External	Maximum Leakage Internal
A	Retracted	1200	0 drops in ½ hour.	5 drops in 1 hour.
B	Extended	1200	0 drops in ½ hour.	5 drops in 1 hour.

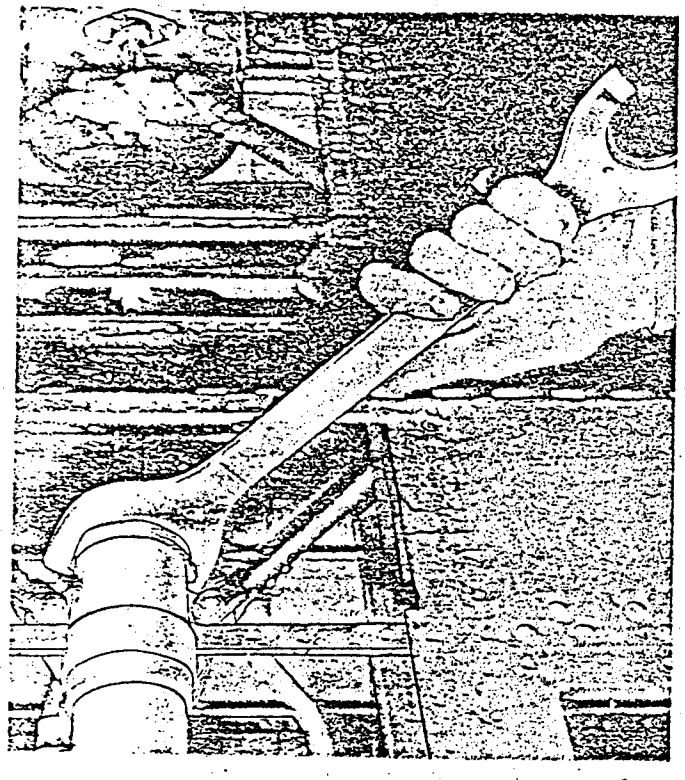

33,325

Figure 3-47. Wing Flap Actuating Cylinder Piston Rod Packing Nut Wrench (Service Tool No. K20001)

3-160. ASSEMBLY OF WING FLAP HYDRAULIC SYSTEM ACTUATING CYLINDER.

a. On C-47A and early C-47B airplanes, use two or three piston rod packings, as required, to provide sufficient packing takeup. On late C-47B and C-117 airplanes, replace all O-rings in the cylinder with new ones.

b. Place the cylinder barrel in a properly shaped rubber-lined hardwood clamp. Place the clamp in a vise and tighten until the cylinder barrel is held securely.

c. Tighten the cylinder base.

d. Assemble and replace the piston assembly.

e. Replace the rubber plug in the cylinder cap lockscrew holes.

f. Replace the cylinder cap and insert the lockscrew.

g. Replace the wipers, the retaining ring, and the packing rings.

h. Tighten the piston rod retaining nut and secure it with lockwire.

3-161. INSTALLATION OF WING FLAP HYDRAULIC SYSTEM ACTUATING CYLINDER.

a. Position the cylinder through the cutout entrance in the rib of the center wing.

b. Secure the auxiliary bearing bolt on the piston rod.

c. Replace the rollers on one side of the cylinder and tighten the bolts.

d. Connect the rods attached to the piston rod and cylinder.

e. Connect the wing flap indicator wire to the wing flap cylinder.

f. Connect and tighten the hydraulic pipes leading to the cylinder.

g. Replace the cover plate on the lower surface of the center wing section.

h. Return the system pressure and check the cylinder for proper operation.

3-162. WING FLAP HYDRAULIC SYSTEM RELIEF VALVE.

(See figures 3-48 and 3-49.)

3-163. The wing flap relief valve is a component of the hydraulic control panel assembly and is located behind the wing flap control valve. This relief valve is installed in the wing flap DOWN pipe to limit the fluid pressure in the forward end of the actuating cylinder at approximately 485 psi to prevent damage of the wing flaps caused by excessive airloads. The wing flap relief valve contains three ports and consists of a spring-loaded piston sliding in the valve body to control the flow of fluid through the three ports of the valve.

3-164. REMOVAL OF WING FLAP HYDRAULIC RELIEF VALVE.

a. Relieve the hydraulic system pressure by operating the wing flaps, and place the wing flap control valve handle in NEUTRAL.

b. Disconnect and cap the hydraulic pipes from the wing flap relief valve.

c. Remove the valve from the airplane.

3-165. TEST PROCEDURE FOR WING FLAP HYDRAULIC SYSTEM RELIEF VALVE. The test procedure for the wing flap hydraulic system relief valve is performed as outlined in table 3-18.

TABLE 3-18
TEST - WING FLAP HYDRAULIC SYSTEM RELIEF VALVE

Test Port	*Ports Plugged*	*Test Pressure Psi*	*Maximum Leakage*	*Remarks*
A	B	400	½-cubic inch a minute at port C.	
C	A and B	120	None	
B	A	1200	10 cubic inches a minute at port C.	
B	Gage at A	800	10 cubic inches a minute at port C.	Pressure at A 430 psi minimum, 485 psi maximum.
B	None	80 (±20)		Flow 2 gpm.

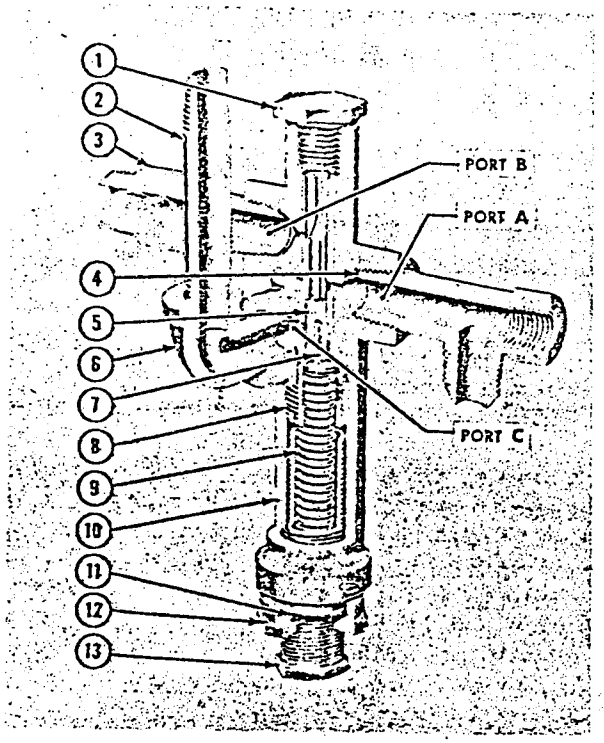

33,326

Figure 3-48. Wing Flap Relief Valve Assembly

Key to Figure 3-48

Item	*Nomenclature*
1.	Plug
2.	Nipple
3.	Tee
4.	Tee
5.	Piston
6.	Elbow
7.	Guide
8.	Stop
9.	Spring
10.	Body (includes sleeve)
11.	Washer
12.	Nut
13.	Plug

3-166. ADJUSTMENT OF WING FLAP HYDRAULIC SYSTEM RELIEF VALVE.

a. Install a 1000-psi test fluid pressure gage at port A.

b. Apply 800 psi at port B.

c. Adjust the springs by turning the bottom plug so that 485 (+10, —0) psi is indicated on the test gage at port A. Fluid will flow at port C. The valve piston must reseat at 350 psi minimum pressure at port A.

d. When the spring has been adjusted properly, tighten the lock nut on the plug and lock with safety-wire.

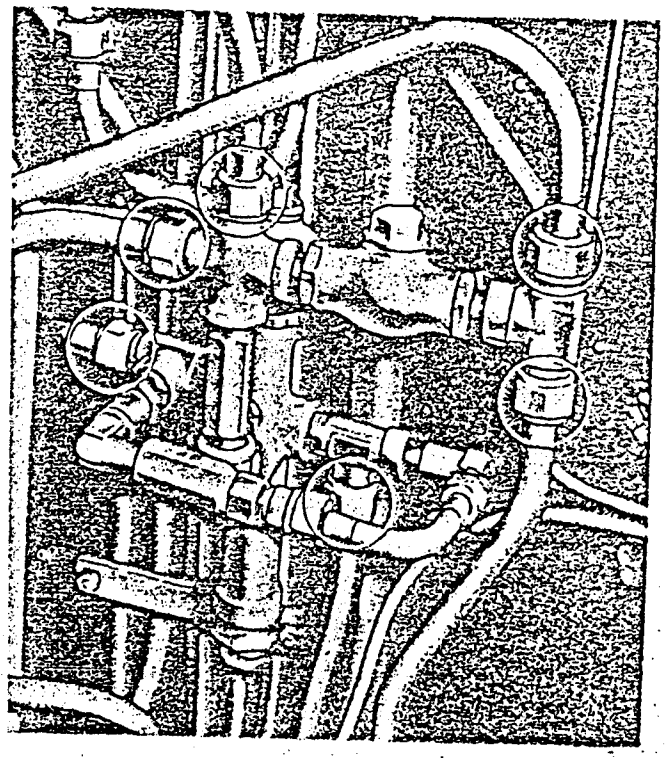

14,470

Figure 3-49. Removal of Wing Flap Relief Valve Assembly (Disconnect Locations Indicated)

3-167. INSTALLATION OF WING FLAP HYDRAULIC SYSTEM RELIEF VALVE.

a. Place the valve in position.

b. Remove the pipe caps and connect the hydraulic pipes to the relief valve.

c. Return the system pressure and check the wing flap relief valve for proper operation.

3-168. WING FLAP ORIFICE CHECK VALVE. *(See figure 3-28.)*

3-169. The wing flap orifice check valve is a conventional check valve with a hole drilled through the spring-loaded valve poppet, and installed in the wing flaps DOWN pipe, located below the floor of the right baggage compartment. This check valve allows unrestricted flow of fluid when the wing flaps are lowered. When the wing flaps are raised, the valve restricts the return flow of fluid in the DOWN pipe from the actuating cylinder. Restriction of the flow of return fluid causes a time lag, which prevents the rapid raising of the wing flaps, and any sudden loss of lift during flight.

3-170. REMOVAL OF WING FLAP ORIFICE CHECK VALVE.

a. To gain access to the valve, remove the flooring in the right side of the baggage compartment.

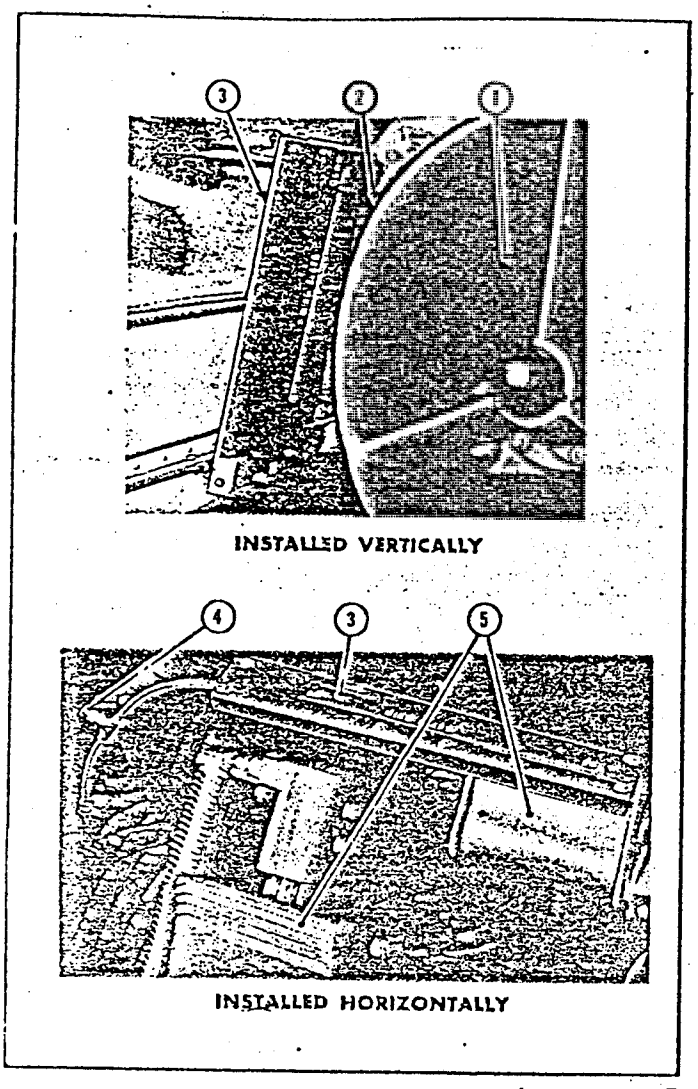

Figure 3-50. Wing Flap Indicator

Key to Figure 3-50

Item	*Nomenclature*
1.	Main Instrument Panel
2.	Pilot's Aileron Control Wheel
3.	Wing Flap Indicator
4.	Lubrication Fitting
5.	Rudder-Brake Pedals

b. Disconnect and cap the two hydraulic pipes from the valve.

c. Remove the valve from the airplane.

3-171. DISASSEMBLY OF WING FLAP ORIFICE CHECK VALVE.

a. Unscrew the end fitting on the valve.

b. Remove the spring and poppet from the check valve.

3-172. ASSEMBLY OF WING FLAP ORIFICE CHECK VALVE.

a. Install the spring and poppet.

b. Tighten the end fitting.

3-173. INSTALLATION OF WING FLAP ORIFICE CHECK VALVE.

a. Connect the two hydraulic pipes to the valve.

b. Install the flooring in the right side of the baggage compartment.

3-174. WING FLAP HYDRAULIC SYSTEM INDICATING SYSTEM.
(See figure 3-50.)

3-175. The wing flap hydraulic system indicating system consists of a flexible steel wire sheathed in a steel tube assembly, with one end of the wire connected to the forward end of the wing flap actuating cylinder and the opposite end connected to an indicator. The indicator is mounted either vertically at the left end of the main instrument panel, or horizontally along the bottom of the pilot's instrument panel. Movement of the wing flap actuating cylinder is accompanied by an equivalent movement of the pointer indicator to show the position of the wing flaps.

3-176. REMOVAL OF WING FLAP HYDRAULIC SYSTEM INDICATING SYSTEM.

a. Remove the indicator pointer from the sheathed steel wire.

b. To gain access to the wing flap actuating cylinder, remove the access cover plate, located on the bottom of the center wing.

c. Disconnect the clevis from the actuating cylinder cap.

d. Remove the indicator.

e. Pull the flap indicator wire from the tube through the access opening.

3-177. MAINTENANCE OF WING FLAP HYDRAULIC SYSTEM INDICATING SYSTEM.

a. Lubricate the wing flap indicator housing tube with oil at the lubrication fitting located on the left side of the flight compartment, assuring that the lubricant travels the inner length of the tube.

3-178. ADJUSTMENT OF WING FLAP HYDRAULIC SYSTEM INDICATING SYSTEM.

a. Adjust the wing flap position indicator wire by setting the clevis attached to the wing flap actuating cylinder.

b. With the wing flaps down, adjust the wing flap indicator for proper travel by lengthening or shortening the clevis.

3-179. INSTALLATION OF WING FLAP HYDRAULIC SYSTEM INDICATING SYSTEM.

a. Insert the flap indicator wire into the tube assembly through the center wing access opening.

b. Connect the clevis to the actuating cylinder cap.

c. Replace the access cover plate on the bottom of the center wing.

d. Install the indicator.

e. Install the indicator pointer to the wire.

3-180. LANDING GEAR HYDRAULIC SYSTEM.

3-181. **GENERAL DESCRIPTION.** *(See figure 3-51.)* The main landing gear is extended or retracted by two hydraulic actuating cylinders, one located in each nacelle, and is controlled by means of a 4-way control valve located on the hydraulic control panel. When the control valve handle is moved to the UP position, the valve directs hydraulic pressure through the hydraulic landing gear UP pipes to each landing gear actuating cylinder, thus forcing the pistons to retract. As the pistons retract, the main landing gear is drawn up into the wheel wells of the nacelles. When the landing gear is retracting, the fluid in the upper portion of the actuating cylinders is forced into the landing gear DOWN pipe and flows back through the control valve to the hydraulic fluid reservoir. Trapped fluid pressure in the actuating cylinder maintains the landing gear in the retracted position. To lock the fluid pressure in the actuating cylinder, move the landing gear control valve handle to the NEUTRAL position after the landing gear has retracted. When the landing gear control valve handle is moved to the DOWN position, fluid under pressure is directed to the top of the actuating cylinders, forcing the cylinder rods to extend, which extends the main landing gear. Fluid in the lower portion of the actuating cylinders is forced into the landing gear UP pipes, flows back through the control valve, and then returns to the hydraulic reservoir. On some C-47A and C-47B airplanes, to assist in balancing the weight of the landing gear, the elastic shock cord bungees are attached to the fittings installed at the top of the landing gear. On later C-47B and C-117 airplanes, the rubber cord bungee installations were replaced with hydraulic compensators. A hydraulic pressure gage, mounted in a bracket on the right side of the flight compartment, indicates the hydraulic fluid pressure in the landing gear DOWN pipes.

Note

No provision is made for thermal expansion of the fluid in the landing gear hydraulic system. The landing gear control valve will always remain in the DOWN position when the airplane is on the ground. This position connects the landing gear hydraulic system to the pressure and return manifolds, and any excess fluid pressure in the landing gear DOWN pipe is relieved through the bleed hole located in the hand pump shutoff valve.

3-182. **REMOVAL, DISASSEMBLY, ASSEMBLY, AND INSTALLATION OF LANDING GEAR HYDRAULIC SYSTEM COMPONENTS.** Removal, disassembly, assembly, and installation of the landing gear hydraulic system components are accomplished as outlined in the following paragraphs.

3-183 LANDING GEAR CONTROL VALVE. *(See figures 3-52 through 3-55.)*

3-184. The landing gear control valve, located on the hydraulic panel above the hydraulic hand pump, controls the flow of hydraulic fluid to the landing gear actuating cylinders. The valves are constructed so that fluid pressure from the system pressure manifold can be directed to either end of the landing gear actuating cylinder, or the fluid flow to the actuating cylinders can be blocked off. When the control valve handle is placed in the NEUTRAL position, both ports to the actuating cylinders are closed and the fluid flow either to or from the actuating cylinders is blocked off. The control valve handle operates in a notched quadrant and it is necessary to lift the handle slightly to move it from one position to another. The landing gear mechanical latch is connected to the landing gear control valve by a rod. The catch and shoe mechanism on the control valve is designed so that the landing gear mechanical latch control handle, located on the floor of the flight compartment, must be raised to the LATCH RAISED position before the landing gear control valve handle can be moved to the UP position for retracting the landing gear.

3-185. REMOVAL OF LANDING GEAR CONTROL VALVE. For removal of the landing gear hydraulic system control valve, refer to Section X.

3-186. DISASSEMBLY OF LANDING GEAR CONTROL VALVE.

a. Unscrew the nut on the plug screw and remove the plug screw and washer.

b. Remove the lock ring, washer, and packing cup from the plug.

c. Unscrew the studs from the control valve base.

d. Remove the diaphragm, gaskets, bearing, and plug.

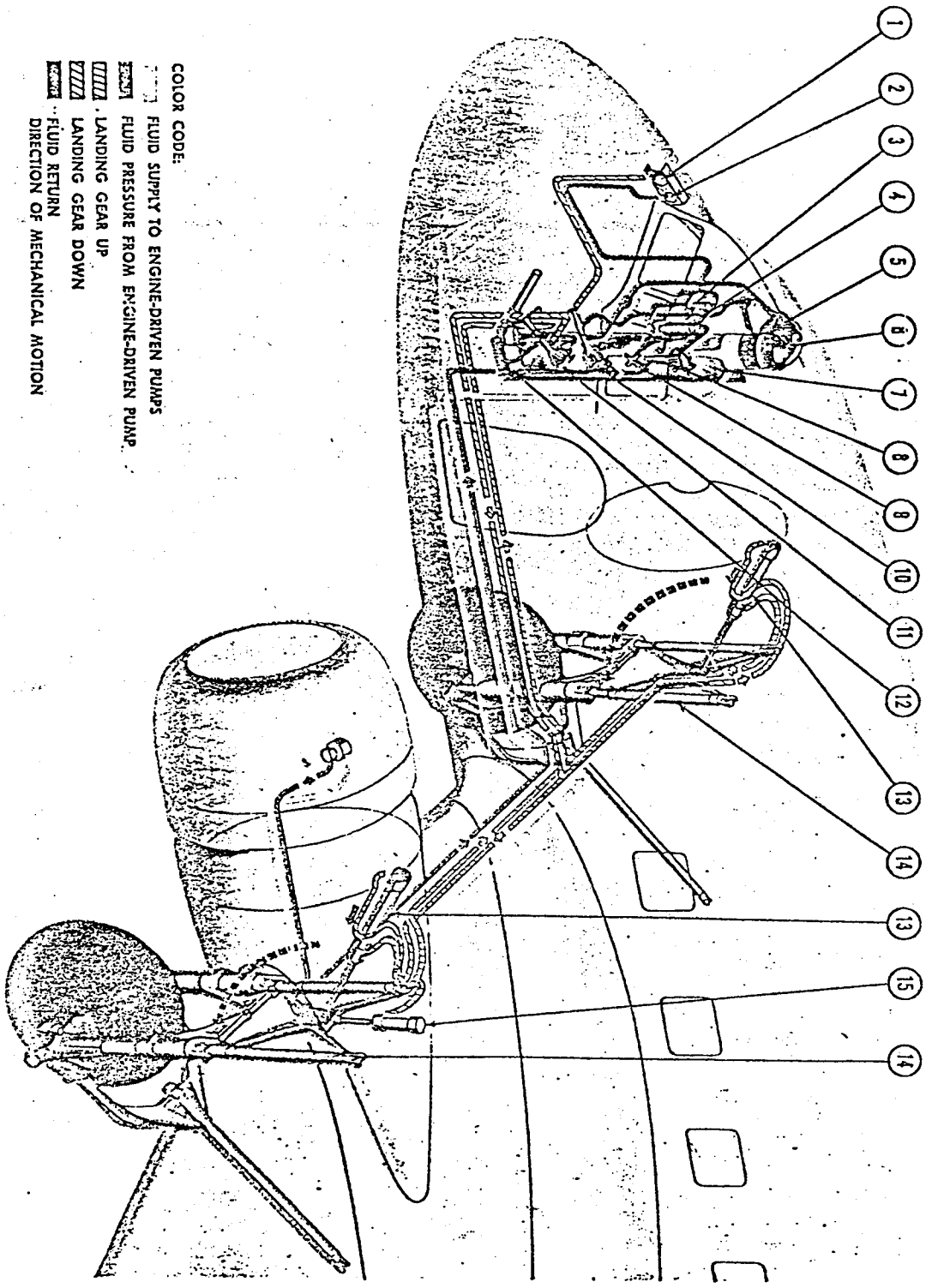

Figure 3-51. Landing Gear Hydraulic System

33,327

Key to Figure 3-51

Item	*Nomenclature*	*Item*	*Nomenclature*
1.	Landing Gear Hydraulic Pressure Gage	9.	Hand Pump-to-Pressure Accumulator
2.	Pressure Gage	10.	Wing Flap Control Valve
3.	Pressure Relief Valve	11.	Landing Gear Control Valve
4.	Pressure Regulator	12.	Hydraulic Hand Pump
5.	Pressure Accumulator	13.	Landing Gear Actuating Pump
6.	Fluid Reservoir	14.	Landing Gear Upper Truss
7.	Hydraulic Control Panel	15.	Landing Gear Hydraulic Compensator
8.	Engine-Driven Hydraulic Pump Selector Valve		

3-187. MAINTENANCE OF LANDING GEAR CONTROL VALVE.

a. External and internal fluid leakage of the valve can be remedied by tightening the plug screw. Replace the plug screw if the fluid leakage does not stop.

b. Replace the control valve if it is damaged or is not functioning properly.

3-188. ASSEMBLY OF LANDING GEAR CONTROL VALVE.

a. Install the elbows in the valve.

b. Check that the holes in the valve are open to the valve ports.

c. After the elbows have been installed in the correct position, lap the plug into the valve body, using extra fine grinding compound. Clean the plug and valve body thoroughly with clean solvent after lapping to remove all traces of the grinding compound. Lubricate the plug with hydraulic fluid, Specification MIL-O-5606, and install it in the valve body. The edge of the plug is not to extend above the packing recess in the body more than 1/64 inch.

d. Insert the bearing. The convex side of the bearing is not to extend above the surface of the valve body more than 0.010 inch.

e. Assemble the gaskets and diaphragms, and install the middle gasket with the slot located between the two 5/16-inch studs.

f. Assemble the base on the valve body, and install the studs, washers, and nuts. Set the studs, using white lead.

g. Install the plug screw, washer, and nut. Insert the packing cup and washer, and secure in place with the lock ring. The washer is to extend into the valve body 1/16 inch.

3-189. INSTALLATION OF LANDING GEAR CONTROL VALVE. For installation of the landing gear hydraulic system control valve, refer to Section X.

3-190. LANDING GEAR ACTUATING CYLINDER.
(See figures 3-56 through 3-59.)

3-191. The landing gear actuating cylinder is attached to the nacelle structure aft of the firewall, and extends through an indentation in the oil tank with the piston rod bolted to the upper truss of the landing gear. When hydraulic fluid under pressure is directed to the upper end of the actuating cylinder, the piston rod extends, forcing the landing gear to extend. When hydraulic fluid under pressure is directed to the lower end of the actuating cylinder, the piston rod retracts, pulling the landing gear up into the nacelle. The actuating cylinder mechanism includes a dashpot unit serving as a shock absorber, so that the actuating cylinder piston can come to rest slowly at the end of the retracting stroke without damaging the attaching structure. The dashpot traps some of the hydraulic fluid at the end of the piston retracting stroke, and forces the fluid through a hole in the dashpot to absorb energy and converts it into heat in the same manner as a shock absorbing strut.

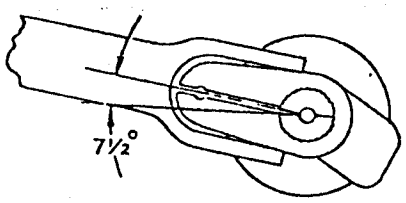

ALIGN SCRIBED MARK ON VALVE SHAFT WITH LOWER SIDE OF SLOT IN LANDING GEAR HANDLE. PLACE LANDING GEAR VALVE HANDLE IN NEUTRAL POSITION AND BUILD UP HYDRAULIC PRESSURE BY OPERATING HYDRAULIC HAND PUMP UNTIL IT IS DIFFICULT TO OPERATE (HAND PUMP SHUT OFF IN CLOSED POSITION).

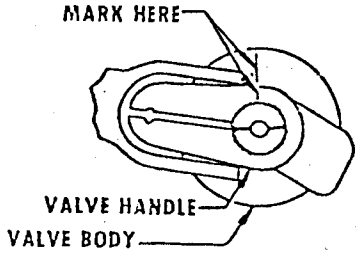

PLACE A PENCIL MARK 90° CLOCKWISE FROM SCRIBED MARK ON SHAFT VALVE HANDLE AND MAKE A CORRESPONDING MARK ON VALVE BODY.

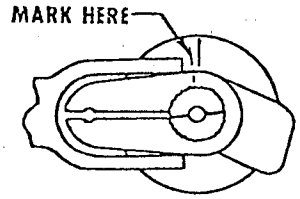

MAINTAIN PRESSURE ON HAND PUMP HANDLE AND SLOWLY MOVE THE VALVE HANDLE TO DOWN POSITION UNTIL A SLIGHT MOVEMENT IS NOTED ON THE HYDRAULIC HAND PUMP HANDLE. THIS INDICATES THE START OF OPENING OF THE VALVE. PLACE A PENCIL MARK ON THE VALVE BODY TO CORRESPOND WITH THE PENCIL MARK ON THE VALVE HANDLE. RETURN VALVE HANDLE TO NEUTRAL POSITION AND BUILD UP HYDRAULIC PRESSURE BY OPERATING HYDRAULIC HAND PUMP UNTIL IT IS DIFFICULT TO OPERATE.

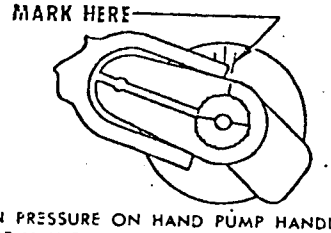

MAINTAIN PRESSURE ON HAND PUMP HANDLE AND SLOWLY MOVE THE VALVE HANDLE TO UP POSITION UNTIL A SLIGHT MOVEMENT IS NOTED ON THE HYDRAULIC HAND PUMP HANDLE. THIS INDICATES THE START OF OPENING OF THE VALVE. PLACE A PENCIL MARK ON THE VALVE BODY TO CORRESPOND WITH PENCIL MARK ON VALVE HANDLE.

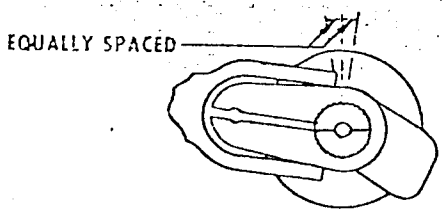

PENCIL MARKS ON BODY SHOULD BE EQUALLY SPACED. UNEQUAL SPACING INDICATES IMPROPER TIMING OF VALVE OPENING AND HANDLE SHOULD BE RELOCATED ON SERRATIONS TO CORRECT TIMING OF VALVE OPENING

33.328

Figure 3-52. Timing Landing Gear Control Valve (Late C-47 and C-117 Airplanes)

3-192. REMOVAL OF LANDING GEAR ACTUATING CYLINDER. For removal of the landing gear hydraulic system actuating cylinders, refer to Section X.

3-193. DISASSEMBLY OF LANDING GEAR ACTUATING CYLINDER (C-47A AND EARLY C-47B AIRPLANES).

a. Remove the lockwire and the piston rod hook end. Remove the snap ring, retaining ring, and felt wiper. Remove the hose and pipe assembly.

b. Remove the packing nut, packing, and spacer.

c. Place the cylinder barrel in a properly shaped rubber-lined hardwood clamp. Place the clamp in a vise and tighten until the cylinder barrel is held secure.

d. Remove the cylinder heads after backing off the packing nuts. Use Douglas tool No. K21101.

e. Remove the piston and piston rod assembly. Use Douglas tool No. K22101 to remove the dashpot.

f. Loosen the setscrew in the piston and back off the packing nut. Remove the washers, spacers, and packing.

3-194. DISASSEMBLY OF LANDING GEAR ACTUATING CYLINDER (LATE C-47B AND C-117 AIRPLANES).

a. Remove the lockwire and the piston rod hook end.

b. Remove the hose and pipe assembly.

c. Remove the retaining nut, wipers, retaining ring, and the packing.

d. Place the cylinder barrel in a properly shaped rubber-lined hardwood clamp. Place the clamp in a vise and tighten until the cylinder barrel is held secure.

e. Remove the piston and the piston rod assembly.

f. Remove the dashpot snap ring, dashpot gland, dashpot, and the spring.

3-195. MAINTENANCE OF LANDING GEAR ACTUATING CYLINDER.

a. To prevent leakage of cylinders, installed on C-47A and early C-47B airplanes, tighten the packing nuts. On later C-47B and C-117 airplanes, replace the O-rings.

b. On early C-47B airplanes, the piston rod packing can be tightened while the actuating cylinder is installed on the airplane, using Douglas tool No. K20001.

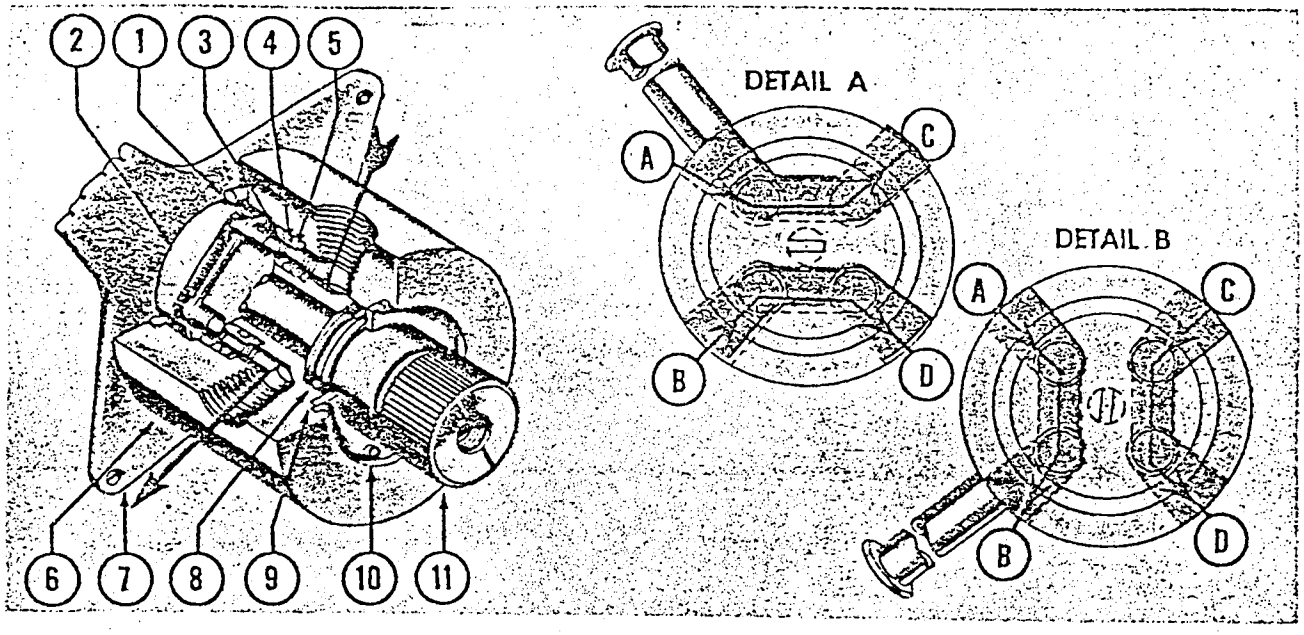

Figure 3-53. Landing Gear and Wing Flap Valve Assembly (Late C-47 and C-117 Airplanes) 33,329

Key to Figure 3-53

Item	Nomenclature	Item	Nomenclature
1.	O-Ring	7.	Base
2.	Porting Plate	8.	O-Ring
3.	O-Ring	9.	Retainer
4.	Shear Seal	10.	Snap Ring
5.	Spring	11.	Shaft
6.	Body		

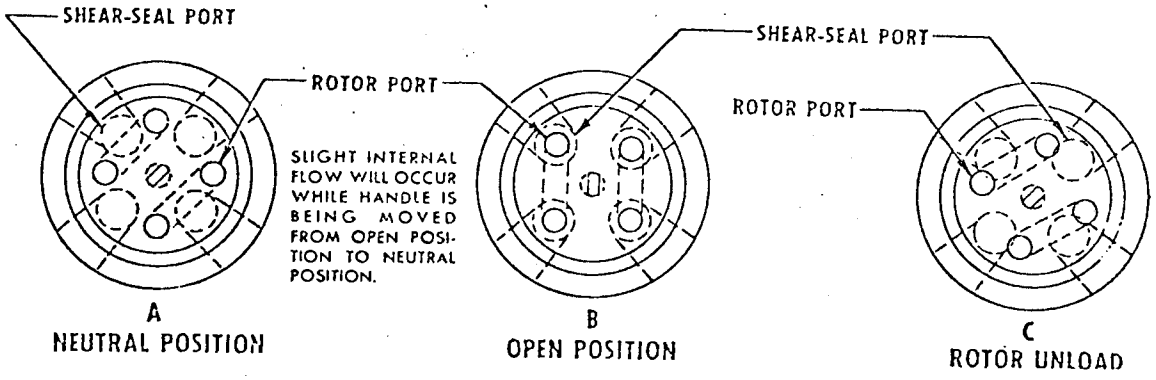

33,330

Figure 3-54. Landing Gear and Wing Flap Valve Rotor (Late C-47 and C-117 Airplanes)

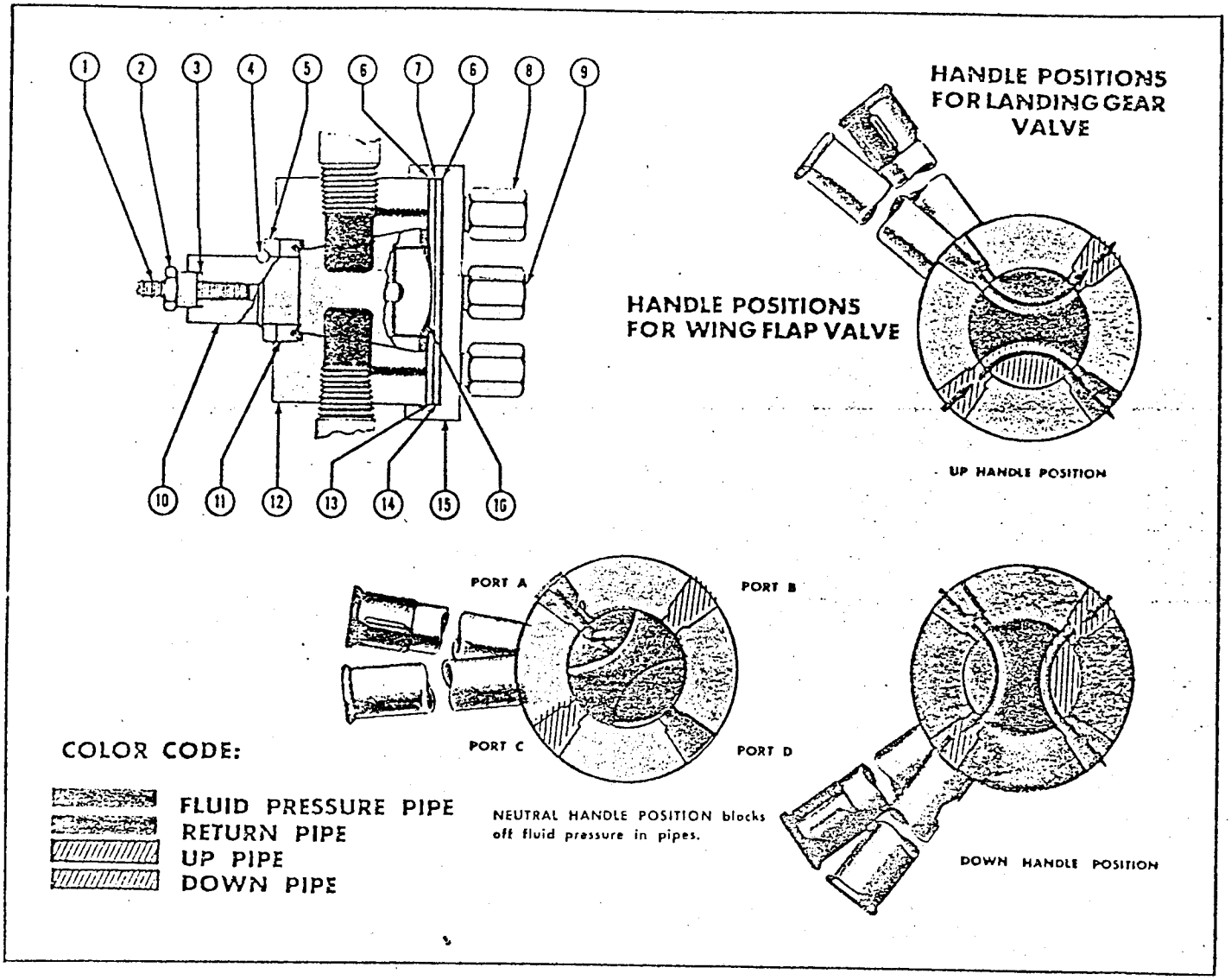

Figure 3-55. Landing Gear and Wing Flap Control Valve Assembly (Early C-47 Airplanes)

Key to Figure 3-55

Item	Nomenclature	Item	Nomenclature
1.	Screw	9.	Stud
2.	Nut	10.	Plug
3.	Washer	11.	Packing Cup
4.	Lock Ring	12.	Body Assembly
5.	Washer	13.	Diaphragm
6.	Gasket	14.	Diaphragm
7.	Gasket	15.	Base
8.	Stud	16.	Bearing

3-196. TEST PROCEDURE FOR LANDING GEAR ACTUATING CYLINDER. The test procedure for the landing gear actuating cylinder is performed as outlined in table 3-19.

TABLE 3-19
TEST - LANDING GEAR ACTUATING CYLINDER

Test Port	*Piston Position*	*Test Pressure Psi*	*Maximum Leakage External*	*Maximum Leakage Internal*
A	Retracted	2500	2 drops in 12 hours.	10 drops an hour.
B	Extended	2500	2 drops in 12 hours.	10 drops an hour.
Dashpot Time — 5 seconds minimum, 18 seconds maximum.				

3-197. ASSEMBLY OF LANDING GEAR ACTUATING CYLINDER.

a. Tin all male pipe threads lightly with approved soft solder.

b. Apply approved thread lubricant to all pipe threads.

c. Lubricate O-rings with approved hydraulic fluid.

d. Place the cylinder barrel in a properly shaped rubber-lined hardwood clamp, and hold with a vise.

e. Install the dashpot snap ring, dashpot gland, dashpot, and the spring.

f. Install the piston rod and piston.

g. Install the cylinder heads and fasten the lock nuts.

h. Install the retaining nut, wipers, retaining ring, and the packing.

i. Install the hose and pipe assembly together with the piston rod hook end, and safety with lockwire.

3-198. INSTALLATION OF LANDING GEAR ACTUATING CYLINDER. For installation of the landing gear hydraulic system actuating cylinders, refer to Section X.

3-199. LANDING GEAR HYDRAULIC COMPENSATOR.
(See figures 3-60 and 3-61.)

3-200. The landing gear hydraulic compensator aids the landing gear actuating cylinder when retracting the landing gear. On later airplanes, the elastic shock cord bungee on the landing gear was replaced with the hydraulic compensator. The compensator cylinder is connected to the landing gear UP pipe by a flexible hose. The upper end of the compensator is bolted to a bracket mounted on the wing front spar, and the compensator piston rod is bolted to the landing gear upper truss. When the landing gear is retracted, fluid under pressure from the landing gear UP pipe, flows through the flexible hose to the lower end of the compensator, forcing the piston to retract. The retracting piston assists the main landing gear actuating cylinder for fast retraction. When the compensator piston retracts, air in the compensator escapes through a small hole located in the upper end of the compensator. When the landing gear is extended, the compensator piston is extended by the weight of the gear, forcing the fluid in the compensator through the flexible hose into the landing gear UP pipe and returns to the hydraulic reservoir. Air flows through the hole in the upper end of the compensator, preventing formation of a vacuum in the compensator when the piston is extended.

Note

Some compensators do not have a filter assembly installed in the cap of the compensator.

3-201. REMOVAL OF LANDING GEAR HYDRAULIC COMPENSATOR. For removal of the landing gear hydraulic system compensator, refer to Section X.

3-202. DISASSEMBLY OF LANDING GEAR HYDRAULIC COMPENSATOR.

a. Place the compensator barrel in a properly shaped hardwood clamp to encircle the full length, and hold in a vise.

b. Unscrew the lock nut from the end cap and remove the cap from the cylinder barrel.

c. Remove the piston assembly.

d. Cut the lockwire and unscrew the piston rod packing nut.

e. Remove the snap ring from the piston rod packing nut, and remove the wiper ring and felt wiper.

f. Unscrew the lock nut and remove the mount end cap.

g. Remove the screws and filter assembly from the mount end cap.

3-203. ASSEMBLY OF LANDING GEAR HYDRAULIC COMPENSATOR.

a. Place the filter assembly on the mount end cap and attach the screws.

Note

Tighten the lock nuts on the compensator end caps to a torque of 225 inch-pounds. Replace all O-ring packings whenever the strut is disassembled.

b. Position the mount end cap and tighten the lock nut.

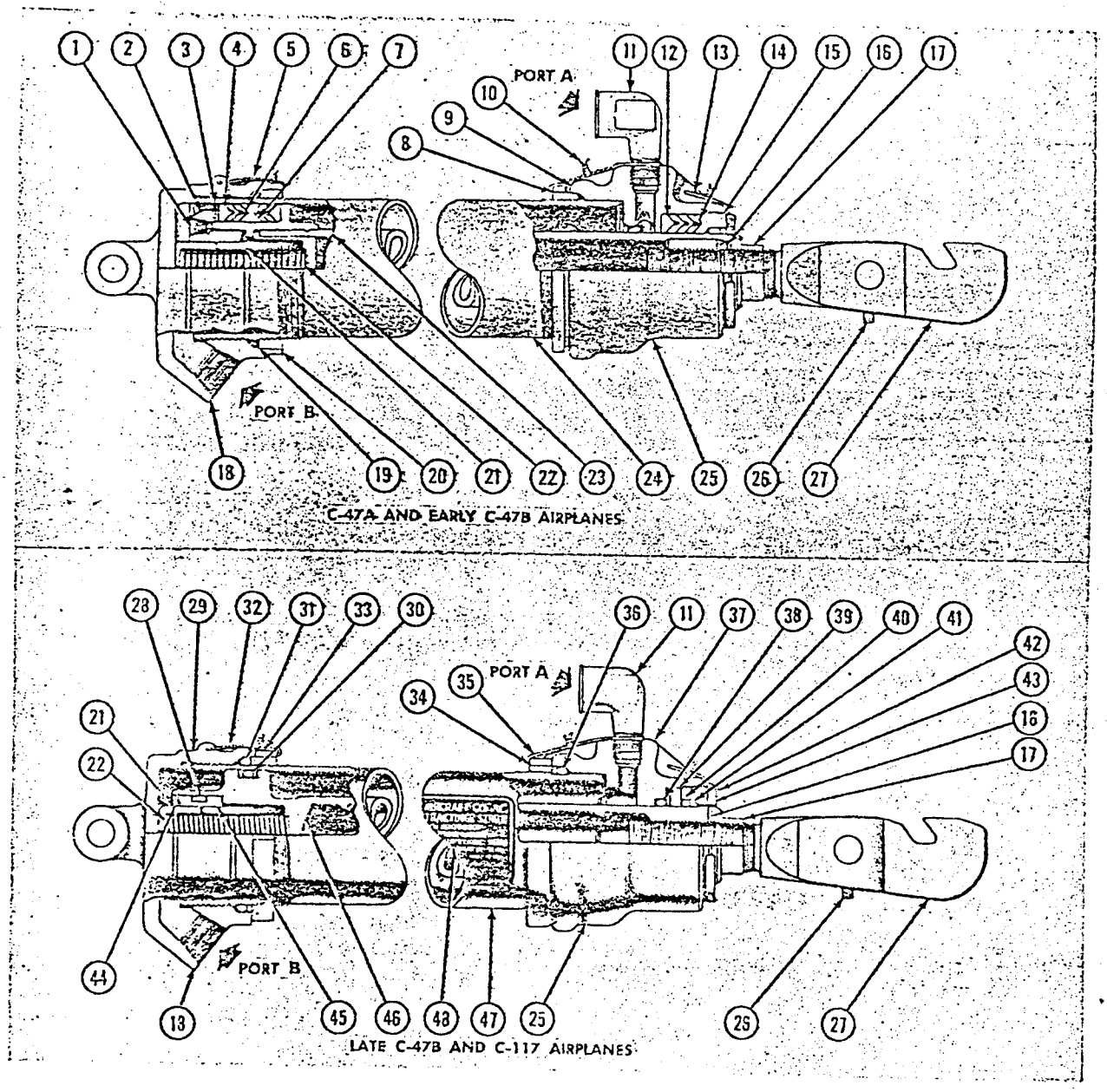

Figure 3-56. Landing Gear Actuating Cylinder Assembly

33,332

c. Insert the wiper ring and felt wiper, and place the snap ring on the piston rod packing nut.

d. Tighten the piston rod packing nut and safety it with lockwire.

e. Position the piston assembly.

f. Insert the end cap into the cylinder barrel and tighten the lock nut on the piston end cap.

3-204. TEST BEFORE INSTALLATION OF LANDING GEAR HYDRAULIC COMPENSATOR. To test the landing gear hydraulic system compensator for fluid leakage, apply 1500 psi pressure at the hydraulic port. No leaks are permitted.

3-205. INSTALLATION OF LANDING GEAR HYDRAULIC COMPENSATOR. For installation of the landing gear hydraulic system compensator, refer to Section X.

3-206. BRAKE HYDRAULIC SYSTEM.

3-207. GENERAL DESCRIPTION. *(See figure 3-63.)* The main landing gear wheel brakes can be applied independently, or simultaneously, by means of two brake control valves contained in a single housing and linked to the rudder-brake pedals. Application of toe pressure on the rudder-brake pedals allows hydraulic fluid under pressure to flow through the brake control

Key to Figure 3-56

Item	*Nomenclature*	*Item*	*Nomenclature*
1.	Screw	25.	Housing
2.	Nut	26.	Lubricator
3.	Washer	27.	Bolt
4.	Spacer	28.	O-Ring
5.	Lockwire	29.	Head
6.	Packing	30.	O-Ring
7.	Spacer	31.	O-Ring
8.	Nut	32.	Lockwire
9.	Washer	33.	Nut
10.	Lockwire	34.	Nut
11.	Steel Elbow	35.	Lockwire
12.	Spacer	36.	O-Ring
13.	Lockwire	37.	Housing
14.	Packing	38.	O-Ring
15.	Nut Assembly	39.	Retainer
16.	Washer	40.	Wiper
17.	Nut	41.	Wiper
18.	Head	42.	Lockwire
19.	Washer	43.	Nut
20.	Nut	44.	Retainer Ring
21.	Dashpot	45.	Bearing
22.	Spring	46.	Piston Assembly
23.	Piston Assembly	47.	Cylinder
24.	Cylinder	48.	Decal

valves and the brake operating pipes, to the brake actuating cylinders. The brake actuating pistons are forced outward to press the brake shoes against the brake drums. When the rudder-brake pedal is released, springs return the brake shoes to the OFF position, forcing the brake actuating pistons inward, and the excess hydraulic fluid flows through the brake-operating pipes to the brake control valve, and into the return pipe to the hydraulic reservoir. A parking brake mechanism is provided to secure the rudder-brake pedals in the ON position.

3-208. REMOVAL, DISASSEMBLY, ASSEMBLY, AND INSTALLATION OF HYDRAULIC BRAKE SYSTEM COMPONENTS. Removal, disassembly, assembly, and installation of the hydraulic brake system components are accomplished as outlined in the following paragraphs.

3-209. HYDRAULIC BRAKE SYSTEM CONTROL VALVE.
(See figures 3-64 through 3-66.)

3-210. The hydraulic brake system control valve provides a supply of hydraulic fluid, at controlled pressure and quantity, to the wheel brakes. The valve is mounted on a bracket in the nose section of the fuselage, and consists of an aluminum-alloy housing containing two piston chambers, each with a port connecting to the brake operating pipe. The pressure port and return port serve both piston chambers, and a system of rods and levers connects the brake valve pistons and the rudder-brake pedals.

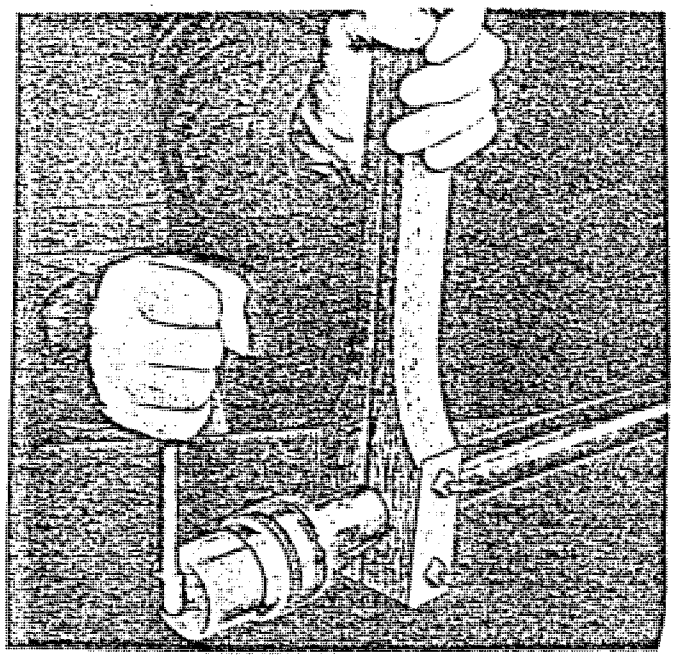

33,333

Figure 3-57. Landing Gear Actuating Cylinder Dashpot Wrench (Service Tool No. 22101)

3-211. Operation of the hydraulic brake control valve starts when toe pressure, applied to the rudder-brake pedal, is transmitted to the arm of the brake valve, causing the brake valve piston and pin to move upward, thus unseating the inlet valve ball. Hydraulic fluid under pressure then flows into the piston chamber and to the brake-operating pipe, actuating the brake pistons and the brake shoes. The hydraulic fluid continues to flow to the brake-operating pipe until the force exerted on the piston by the fluid pressure in the brake-operating pipe equals the force applied on the rudder-brake pedals. The fluid pressure then forces the piston down, and the inlet valve ball is seated. Piston thrust is taken up by deflection of the arm of the brake valve, so that fluid pressure is felt at the rudder-brake pedals. Brakes are applied according to the amount of pedal pressure and there is no noticeable lag in this operation of the brake valve. When pressure on the rudder-brake pedal is released, the piston moves down, and a fixed pin in the piston unseats the outlet valve. The excess fluid in the brake-operating pipe flows back through two holes located in the valve piston into the return pipe to the reservoir. A check valve prevents backflow of fluid from the brake control valve and is installed in the pressure port of the brake valve.

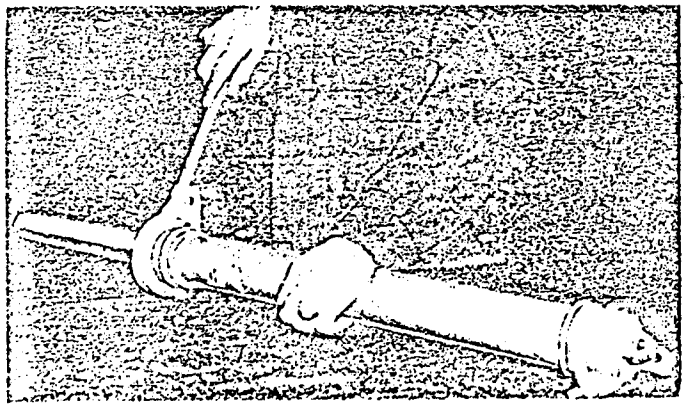

33,334

Figure 3-58. Landing Gear Actuating Cylinder Housing Wrench (Service Tool No. K21101)

3-212. REMOVAL OF HYDRAULIC BRAKE SYSTEM CONTROL VALVE.

a. Relieve the hydraulic system pressure by operating the wing flaps, and drain the hydraulic fluid from the system.

b. Disconnect and cap the hydraulic pipes from the brake control valve.

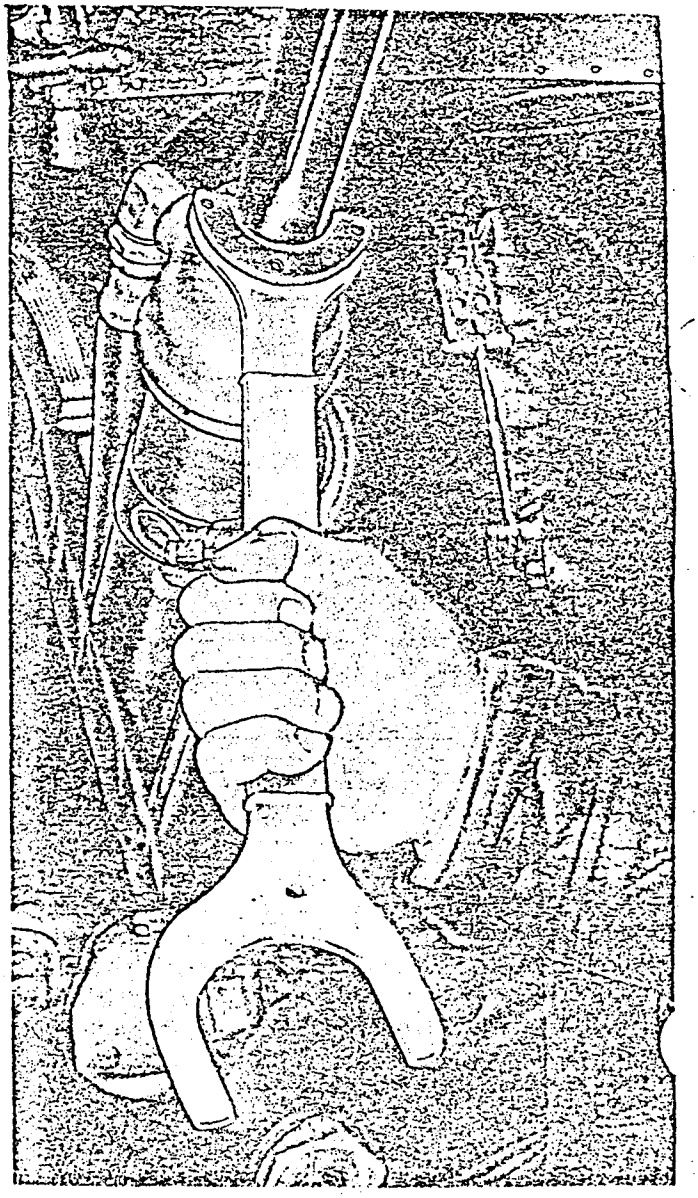

33,335

Figure 3-59. Landing Gear Actuating Cylinder Piston Rod Packing Nut Wrench (Service Tool No. K20001)

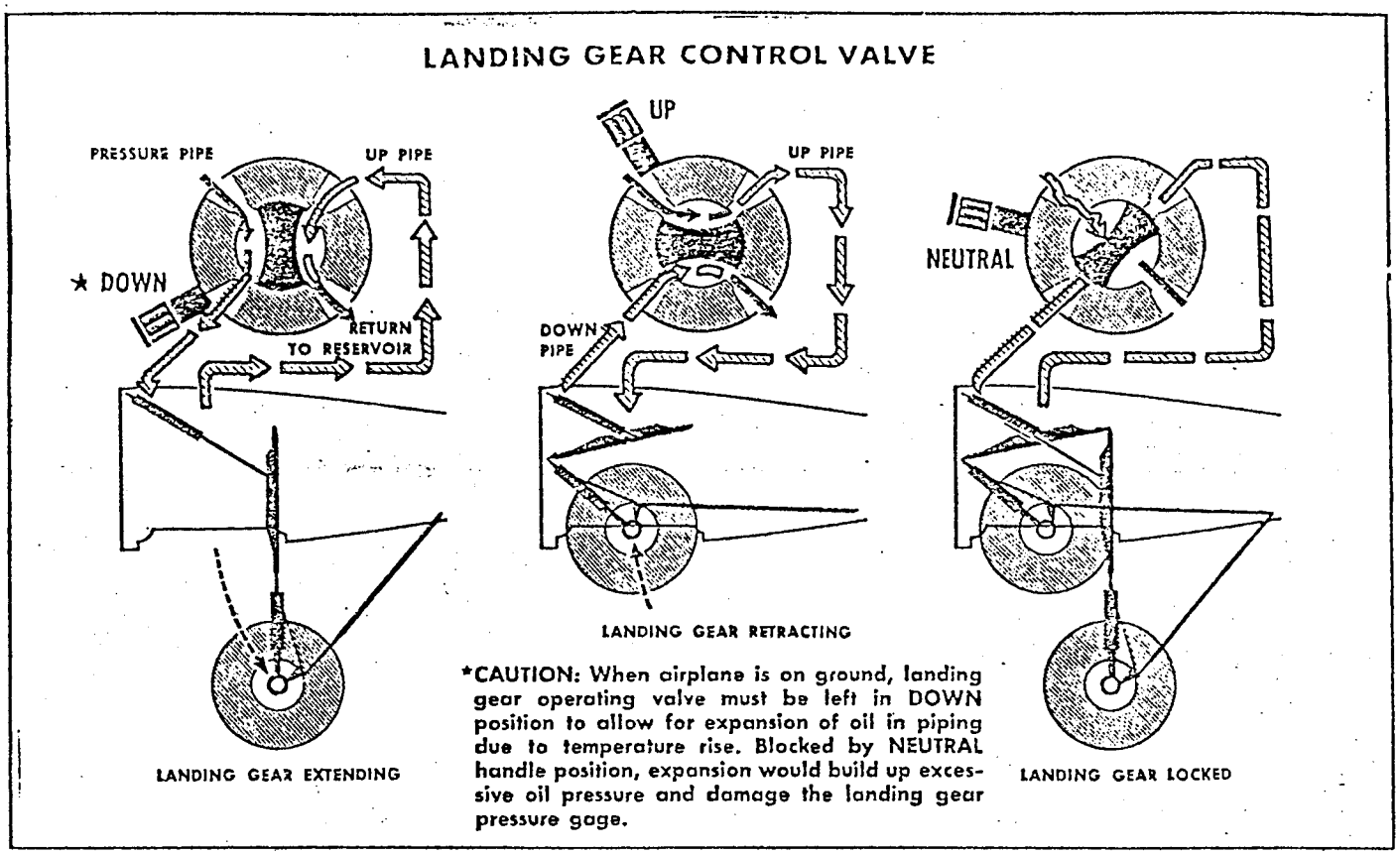

Figure 3-60. Operation of Landing Gear

33,335

c. Disconnect the rudder-brake pedal operating linkage from the arms of the brake control valve.

d. Remove the bolts that attach the brake control valve to the bracket and remove the valve from the airplane.

3-213. TEST PROCEDURE FOR HYDRAULIC BRAKE SYSTEM CONTROL VALVE. The test procedure for the hydraulic brake system control valve is performed as outlined in table 3-20.

TABLE 3-20
TEST - HYDRAULIC BRAKE SYSTEM CONTROL VALVE

Test Port	*Ports Plugged*	*Test Pressure Psi*	*Piston Position*	*Maximum Leakage*	*Flow GPM*	*Remarks*
A	None	1200	Free	1 drop an hour past each ball. No other leakage.		May be tested before head is assembled on housing.
A	B and C	1000	Up	1 drop an hour past packing. 1 drop an hour past valve seat.		
A	None	80	Up		1.5 at B. 1.5 at C.	
B	A and C	10	Free		1.5 at D.	
C	A and B	10	Free		1.5 at D.	
D	A, B, and C	100	Free	2 drops in 12 hours past packing.		

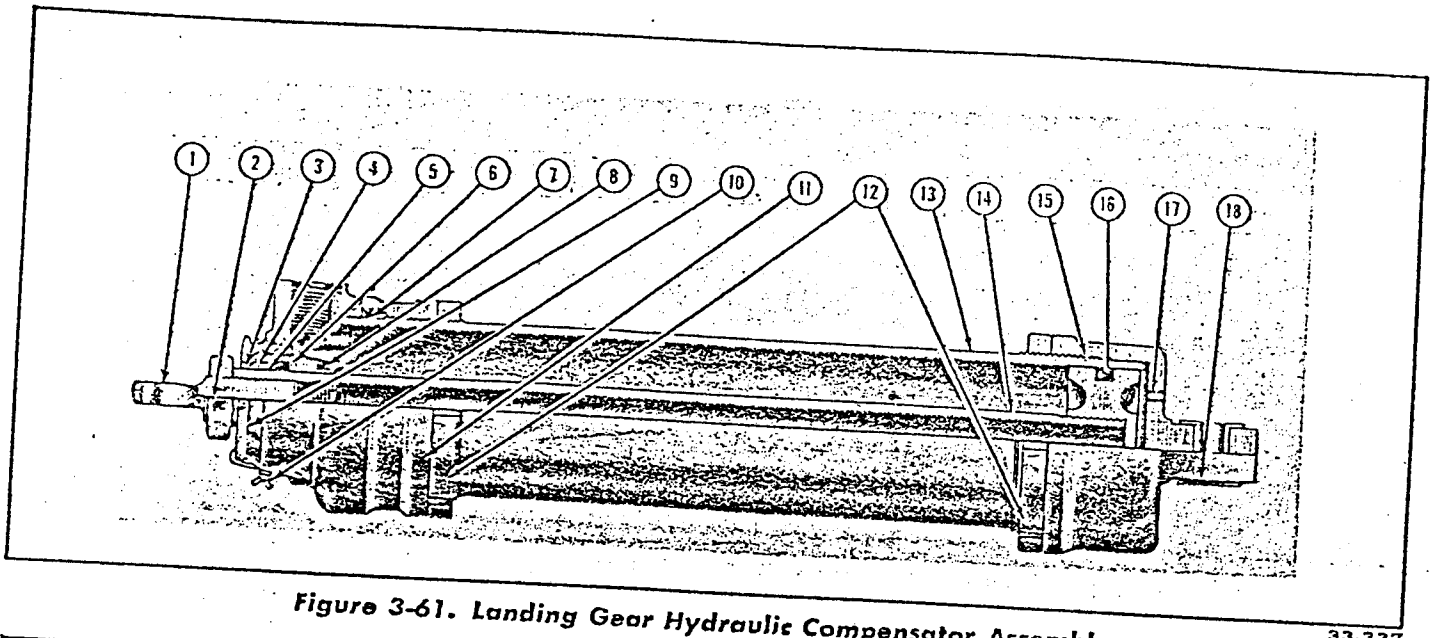

Figure 3-61. Landing Gear Hydraulic Compensator Assembly

33,337

Key to Figure 3-61

Item	Nomenclature	Item	Nomenclature
1.	Piston Rod Eyebolt	10.	Lockwire
2.	Nut	11.	End Cap
3.	Lock Ring	12.	Lock Nut
4.	Scraper	13.	Cylinder Barrel
5.	Felt Wiper	14.	Piston Assembly
6.	Packing	15.	End Cap
7.	Packing	16.	Packing
8.	Packing	17.	Air Bleed Hole
9.	Bushing	18.	End Cap Bushing

3-214. BLEEDING OF HYDRAULIC SYSTEM BRAKES. For information on bleeding procedure of the brakes, see Section X.

3-215. DISASSEMBLY OF HYDRAULIC BRAKE SYSTEM CONTROL VALVE.

a. Remove the cotter pin and link from the lower end of the piston control valve.

b. Remove the studs, gasket, and cover assembly.

c. Remove the spring, the piston, and the packing nut, and packing from the valve housing.

d. Remove the inlet valve operating pin, the spacer, and the packing rings from the piston.

3-216. LOW PRESSURE ADJUSTMENT OF HYDRAULIC SYSTEM BRAKES.

a. Replace the bleeder hoses with 1000-psi test gages on the bleeder fitting of each inboard brake. Obtain full system pressure of 875 psi and turn in the low pressure adjusting screw on the brake control valve, until 200 psi is indicated on the test gage at the brake. Set the parking brakes to obtain the required 875 psi. Apply the parking brake to conveniently provide and hold the system pressure for low pressure adjustment.

CAUTION

Do not depress the rudder-brake pedals during the low pressure adjustment or the 100 psi test gages will be damaged.

b. Release the low pressure adjusting screws, and replace the 1000-psi test gages with 100-psi test gages.

c. With full system pressure of 875 psi in the hydraulic system, turn in the low pressure adjusting screw until 50 psi is indicated on the test gage at the brake. Back off the screw until it is free. Approximately 7-psi fluid pressure will be indicated on the test gage at the brake.

d. Turn in the low pressure adjusting screw again until 50 psi is indicated on the gage. Back off the low pressure screw by fast half-turns, watching the gage indication at each half-turn. When the pressure

gage indicates the 7-psi static pressure, back off the screw an additional half-turn and tighten the locknut.

e. Repeat the low pressure adjustment on the opposite wheel.

f. Safety wire in accordance with figure 3-64.

3-217. HIGH PRESSURE ADJUSTMENT OF HYDRAULIC SYSTEM BRAKES.

a. Replace the 100-psi test gages with 1000-psi pressure gages. With one man stationed in the flight compartment to operate the rudder-brake pedals, adjust each brake arm lever.

Note

The high pressure clamp must be readjusted whenever the low pressure screw is adjusted.

b. Place the high pressure adjusting clamp in the center of the overall travel. Tighten the setscrew, and apply toe pressure to the rudder-brake pedal until the pedal hits the stop. Observe the pressure indication at the test gage, and readjust the clamp to obtain the required 650 (±15) psi. Move the clamp forward to increase the pressure, or aft to decrease the pressure; tighten the setscrew after each trial to insure accurate adjustment.

c. When correct adjustment is attained, tighten setscrew and locknut. Safety setscrew with lockwire (see figure 3-64).

d. Repeat the adjustment of the high pressure clamp on the opposite brake. Set the parking brakes with 800 psi in the hydraulic system, and relieve the pressure in the remainder of the hydraulic system by operating the wing flaps. A pressure drop indication of 50 psi, but not below 400 psi minimum at the gages, is allowable.

e. Release the parking brake, and remove the test pressure gages. Tighten all bleeder valve screws and safety with lockwire.

3-218. ASSEMBLY OF HYDRAULIC BRAKE SYSTEM CONTROL VALVE.

a. Slide the piston into the nut and insert the pin through the hole in the nut and the piston.

b. Install the spacer and packing rings in the valve housing.

c. Drop the piston, cup packing, and nut assembly into the valve housing and tighten the nut by turning the lower end of the piston with a wrench.

d. Install the packing nut but do not overtighten, as this can cause distortion of the packing and prevent free operation of the valve piston.

e. Place the inlet valve operating pin in the piston and install the spacer on the piston cup packing. Place the spring on the spacer.

f. Install the gasket and cover assembly, and set the studs, using white lead.

g. Set the link in the lower end of the piston and secure with a cotter pin.

h. With the valve assembled, apply 200-psi hydraulic pressure at the pressure port to seat the inlet valve ball. Turn the piston at the lower end until the piston raises the pin, forcing the inlet valve ball off the seat and flowing fluid through the valve. Back off the piston until the flow stops, and back off the piston an additional one-eighth turn. Insert the fiber plug into the locking hole and install the lockscrew, locknut, washer, and capnut.

Note

Tighten the lockscrew to 15 to 30 inch-pounds wrench torque, so that the piston and nut will not back off when 35 inch-pounds force is applied to the piston in the raised position. If the lockscrew does not enter the valve body at the required torque, the fiber plug can be shortened to permit proper installation and sealing of the capnut.

3-219. INSTALLATION OF HYDRAULIC BRAKE SYSTEM CONTROL VALVE.

(See figure 3-62.)

a. Position the valve and tighten the bolts attaching the brake valve to the bracket.

b. Connect the rudder-brake pedal operating linkage to the arms of the brake valve.

c. Connect the hydraulic pipes.

d. Build up hydraulic system pressure and check the brake valve for proper operation.

3-220. HYDRAULIC BRAKE SYSTEM ACTUATING CYLINDER.

(See figure 3-63.)

3-221. The brake actuating cylinder is an integral part of the brake torque spider installed in each main landing gear wheel. The actuating mechanism consists of two piston and cup assemblies located in the cylinder, and the connections between the actuating pistons and brake shoes provided by two floating anchor caps. When toe pressure is applied to the rudder-brake pedals and hydraulic fluid flows through the brake control valve to the brake cylinder, the brake actuating pistons are forced outward to force the brake shoes against the brake drum. When the rudder-brake pedals are released, the brake shoes are

returned to the nonoperating position by the return spring and the brake actuating pistons are forced inward by the brake shoes. The excess fluid returns to the hydraulic reservoir through the brake-operating pipe, the brake control valve, and the brake return pipe.

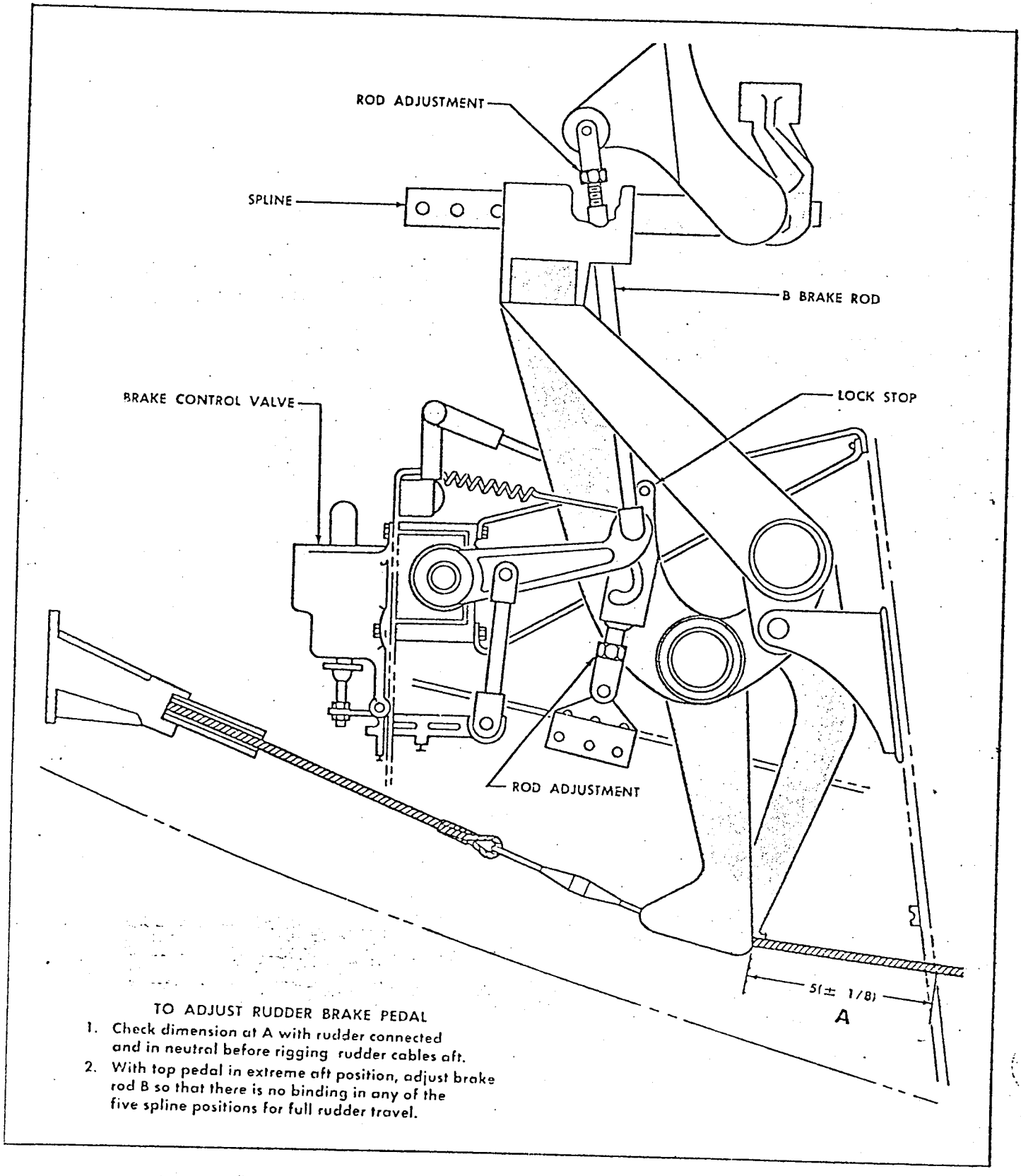

Figure 3-62. Rudder-Brake Pedal Adjustment Mechanism

40.211

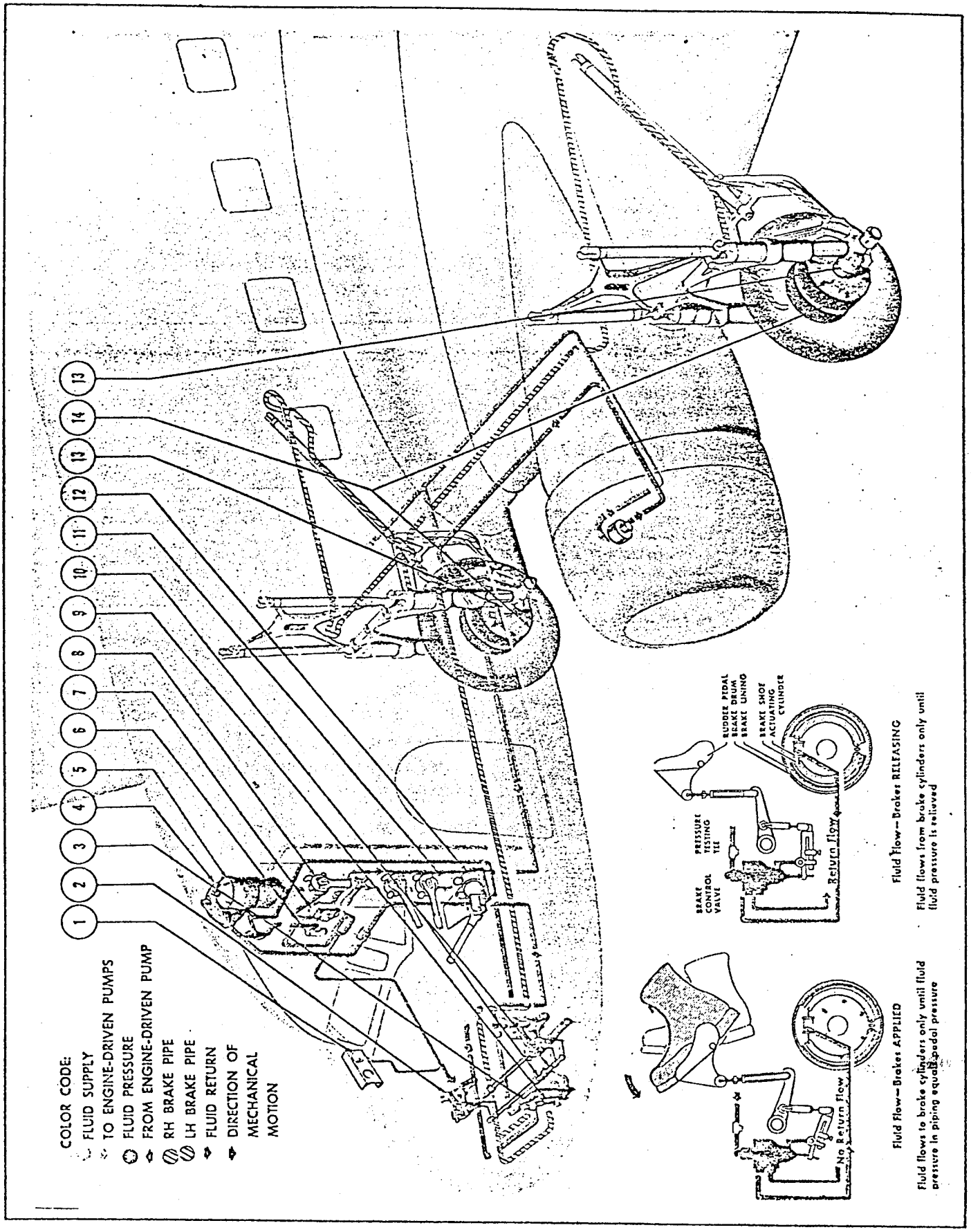

33,338

Figure 3-63. Brake Hydraulic System

Key to Figure 3-63

Item	Nomenclature	Item	Nomenclature
1.	Hydraulic System Pressure Gage	8.	Engine-Driven Hydraulic Pump Selector Valve
2.	Rudder-Brake Pedals	9.	Brake Control Valve
3.	Check Valve	10.	Linkage Assembly
4.	Hydraulic System Pressure Accumulator	11.	Hydraulic Control Panel
5.	Hydraulic System Fluid Reservoir	12.	Hydraulic Hand Pump
6.	Hydraulic System Pressure Relief Valve	13.	Brake Disconnect Couplings
7.	Hydraulic System Pressure Regulator	14.	Brake Assemblies

3-222. REMOVAL AND INSTALLATION OF HYDRAULIC BRAKE SYSTEM ACTUATING CYLINDER. For the removal and installation of the hydraulic brake system actuating cylinder, refer to Section X.

3-223. HYDRAULIC BRAKE SYSTEM CHECK VALVE.
(See figure 3-28.)

3-224. A check valve, installed in the pressure port of the brake control valve to prevent backflow from the brake valve, allows the parking brakes to remain locked in the event of hydraulic system pressure loss.

3-225. REMOVAL OF HYDRAULIC BRAKE SYSTEM CHECK VALVE.

a. To gain access to the check valve, open the hinged upper section of the fuselage nose.

b. Disconnect and cap the hydraulic pipe from the valve.

c. Unscrew the check valve from the brake control valve, and remove the check valve from the airplane.

3-226. DISASSEMBLY OF HYDRAULIC BRAKE SYSTEM CHECK VALVE.

a. Unscrew the end fitting and gasket from the valve.

b. Remove the ball, or poppet and spring.

3-227. ASSEMBLY OF HYDRAULIC BRAKE SYSTEM CHECK VALVE.

a. Check that all parts of the valve are clean before assembly.

b. Install the ball, or poppet and spring, in the valve body.

c. Connect the end fitting with the gasket to the check valve.

3-228. TEST PROCEDURE FOR HYDRAULIC BRAKE SYSTEM CHECK VALVE. The test procedure for the hydraulic brake system check valve is performed as outlined in table 3-21.

TABLE 3-21
TEST - HYDRAULIC BRAKE SYSTEM CHECK VALVE

Test Port	Ports Plugged	Test Pressure Psi	Maximum Internal	Leakage External
Outlet.	None	1500	None	
Outlet.	None	5	1 drop in 2 minutes.	None
Note: Opening pressure at inlet 2 to 6 psi.				

3-229. INSTALLATION OF HYDRAULIC BRAKE SYSTEM CHECK VALVE.

a. Position the check valve and tighten the screws, attaching the valve to the brake control valve.

b. Connect the hydraulic pipe.

c. Close and secure the hinged upper section of the fuselage nose.

3-230. HYDRAULIC BRAKE SYSTEM SELF-SEALING COUPLINGS.

3-231. Self-sealing couplings are installed to connect the brake actuating cylinders to the flexible hoses of the brakes. The coupling consists of two sections connected by a union nut; each half of the coupling contains a spring-operated valve. Unscrewing the union nut closes the valves, and tightening of the union nut opens the valves. No fluid leakage occurs when the coupling is connected or disconnected. The coupling is attached to the brake cylinder port with a hollow bolt, and is sealed with two soft aluminum or copper gaskets. The hollow bolt is locked with a swivel coupling bolt locking plate.

3-232. REMOVAL OF HYDRAULIC BRAKE SYSTEM SELF-SEALING COUPLINGS.

a. Relieve the hydraulic system pressure by operating the wing flaps.

b. Remove the swivel coupling bolt locking plate.

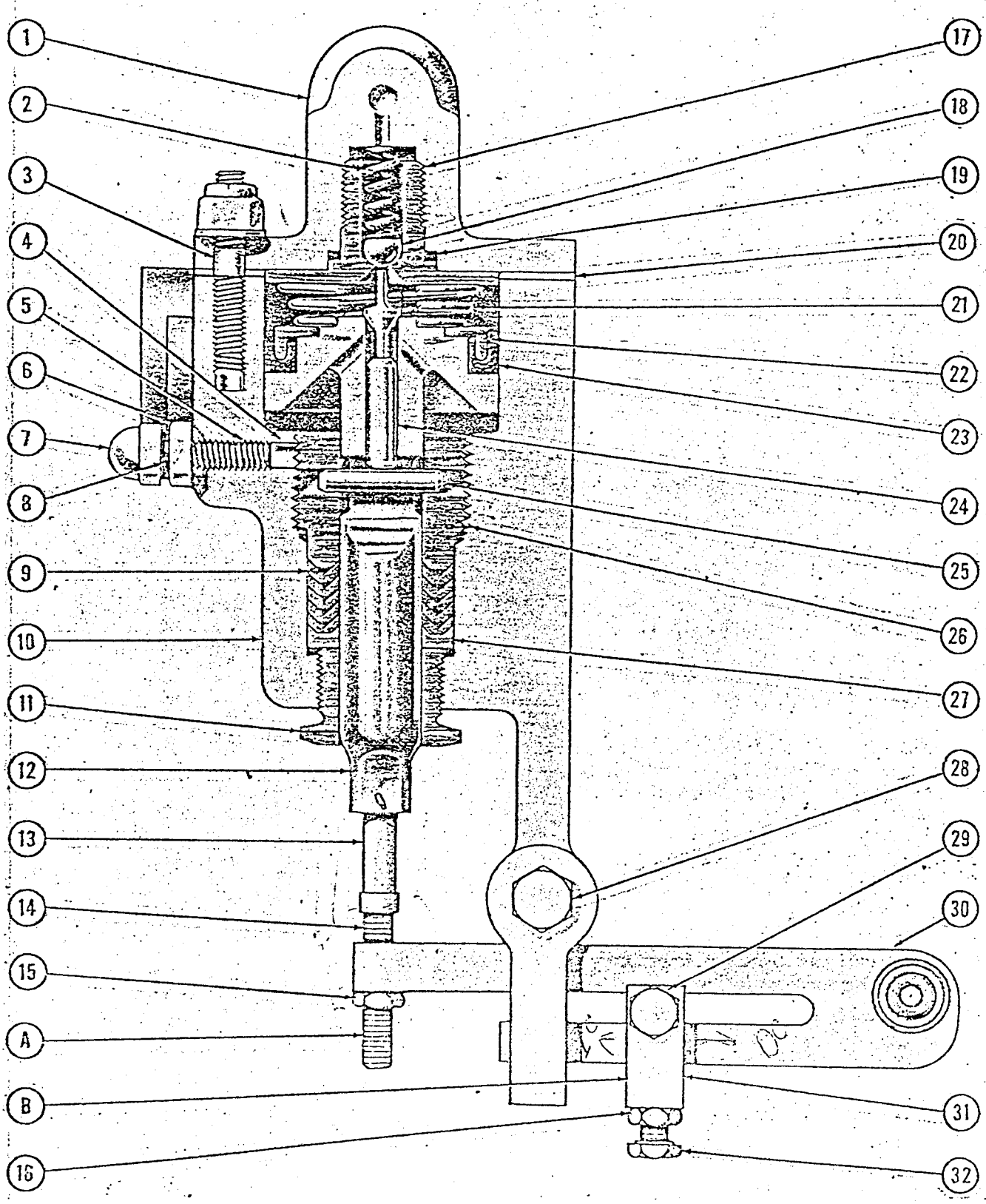

Figure 3-64. Brake Control Valve Assembly

Key to Figure 3-64

Item	Nomenclature	Item	Nomenclature
1.	Cover	18.	Steel Ball
2.	Spring	19.	Washer
3.	Stud (set in white lead)	20.	Gasket
4.	Red Fiber Plug	21.	Spring
5.	Screw	22.	Spacer
6.	Nut	23.	Packing
7.	Nickel-Plated Brass Cap Nut	24.	Pin
8.	Washer	25.	Pin
9.	Packing	26.	Nut
10.	Housing	27.	Spacer
11.	Nut	28.	Shaft
12.	Piston	29.	Bolt and Nut
13.	Link	30.	Lever Assembly
14.	Screw	31.	Clamp
15.	Nut	32.	Bolt, Setscrew
16.	Nut, lock	A.	Low-Pressure Adjustment
17.	Seat	B.	High-Pressure Adjustment

c. Disconnect the flexible hose from the coupling and plug the exposed end of the hose.

d. Remove the bolt attaching the coupling to the brake cylinder port and plug the exposed hole.

3-233. DISASSEMBLY OF HYDRAULIC BRAKE SYSTEM SELF-SEALING COUPLINGS. Only one half of the coupling can be disassembled by unscrewing the mounting fitting; the other half of the self-sealing coupling cannot be disassembled.

3-234. ASSEMBLY OF HYDRAULIC BRAKE SYSTEM SELF-SEALING COUPLINGS. To assemble the one half of the self-sealing coupling, screw the mounting fitting together.

3-235. INSTALLATION OF HYDRAULIC BRAKE SYSTEM SELF-SEALING COUPLINGS.

a. Remove the plug from the exposed hole in the brake cylinder port and secure the bolt, attaching the coupling to the brake cylinder port.

b. Remove the hose plug and connect the flexible hose to the coupling.

c. Replace the swivel coupling bolt locking plate.

3-236. HEATING AND VENTILATING SYSTEMS.

3-237. GENERAL DESCRIPTION. *(See figures 3-67 through 3-70.)* The heating and ventilating systems consist of two major types. A steam-type system is installed on early C-47 and on some C-47A airplanes. Hot-air type systems are installed on late C-47 and C-117 airplanes. The steam-type system incorporates a boiler unit located around the right engine exhaust tailpipe. Water is converted into steam by the heat of the engine exhaust gases. The steam is forced into a radiator which heats outside air funneled through an airscoop assembly. Heated air is then circulated through ducting into the compartments of the airplane. The hot-air type systems use outside air that enters the two muff-type heat exchangers where cold air, which enters through the airscoops, is mixed as required to maintain the desired temperature. Ventilation is accomplished by allowing unheated outside air to enter the ducting system. Controls, in conjunction with the necessary linkages, ducts, valves, and mixing chambers, regulate the temperature of the incoming air by permitting outside air and heated air to mix in the proper proportions. Controls which regulate the flow of air are located at the duct inlets or outlet termination points. An additional control on the steam-type heating and ventilating systems is linked to a shutoff valve located in the steam pipe between the boiler and radiator.

3-238. STEAM HEATING AND VENTILATING SYSTEM (C-47 AND SOME C-47A AIRPLANES).

3-239. GENERAL DESCRIPTION. *(See figure 3-69.)* The steam heating and ventilating system consists of a boiler, water supply tank, funnel (a reserve water supply tank is installed on some airplanes), pressure gage, pressure regulator, pressure relief valve, two air eliminators, two steam traps (only one steam trap is provided on some airplanes), shutoff valve, radiator, two windshield defrosting shields, airscoops, pipes, ducts, outlets, controls, and control linkages. Water flows from the water supply tank to the boiler in the exhaust pipe where the exhaust gas heat converts the

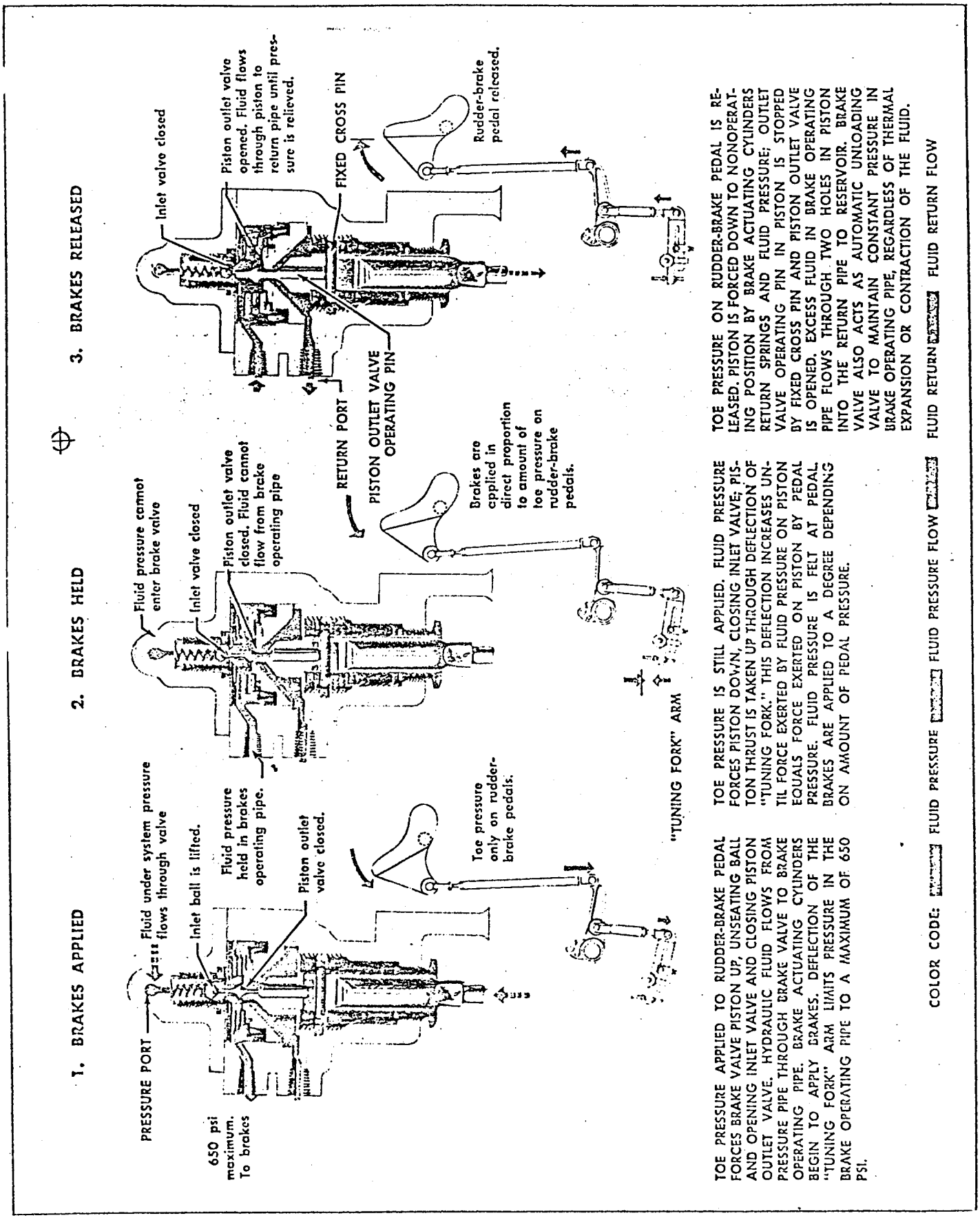

Figure 3-65. Operation of Brake Control Valve

water into steam. The steam passes into the radiator through the steam supply pipes. The steam in the radiator is condensed into water by transmitting its heat to the air flowing through the radiator to the cabin. The resulting condensation flows through a steam trap located in the fuselage adjacent to the radiator and returns to the boiler. An air eliminator, which provides a vent to eliminate air from the system quickly during the starting operations, is located on the water supply tank next to the filler funnel. This vent prevents sluggish operation of the steam system. A second air eliminator is located adjacent to the radiator in the pipe leading from the radiator. The air eliminators are automatic and remain closed after the air has been forced out. The steam supply between the boiler and radiator is tapped by a pressure balance pipe which is connected to the water supply tank. A steam pressure regulator in the balance pipe maintains 25 psi air pressure in the water supply tank. A safety relief valve is located in the steam supply pipe, which prevents the steam pressure from exceeding 45 psi pressure if the steam pressure regulator should fail to operate properly. A pressure gage is located on top of the water tank (on some airplanes, the gage is located next to the radiator). The water in the steam system drains back into the boiler and the water supply tank.

3-240. Air enters the steam heating and ventilating system through a two-passage airscoop located on the top of the fuselage. The airscoop diverts the incoming air into two passages, one to the radiator and one around the radiator. Both passages merge into one duct aft of the radiator, which connects directly with the main cargo compartment duct.

3-241. On some airplanes, a duct located immediately aft of the mixing valve adjoins the duct which is connected to the main cargo compartment duct. This duct terminates at the windshield defroster and the pilot's hand warmer outlets. Another duct also connects with the duct immediately aft of the mixing valve. This duct and its branches provide outlets for the radio operator's and pilot's foot warmers. Air temperature in the ducts is controlled by a mixing valve control handle, which protrudes from the duct just aft of the radiator. The mixing valve handle is connected to a shaft that extends through the hot and the cold air passages, and controls the setting of the butterfly-type valve located in each duct. When one valve is completely open, the other is closed. Turning the handle clockwise increases the temperature. An intake (weather) valve, installed in a duct aft of the intake airscoop, controls the flow of outside air into the radiator and the cold air duct. The steam supply to the radiator is shut off by a handle located on the floor against the aft bulkhead of the radio operator's compartment. Pulling the handle up shuts off the steam. Butterfly-type hand controls are located adjacent to the heating and ventilating outlets.

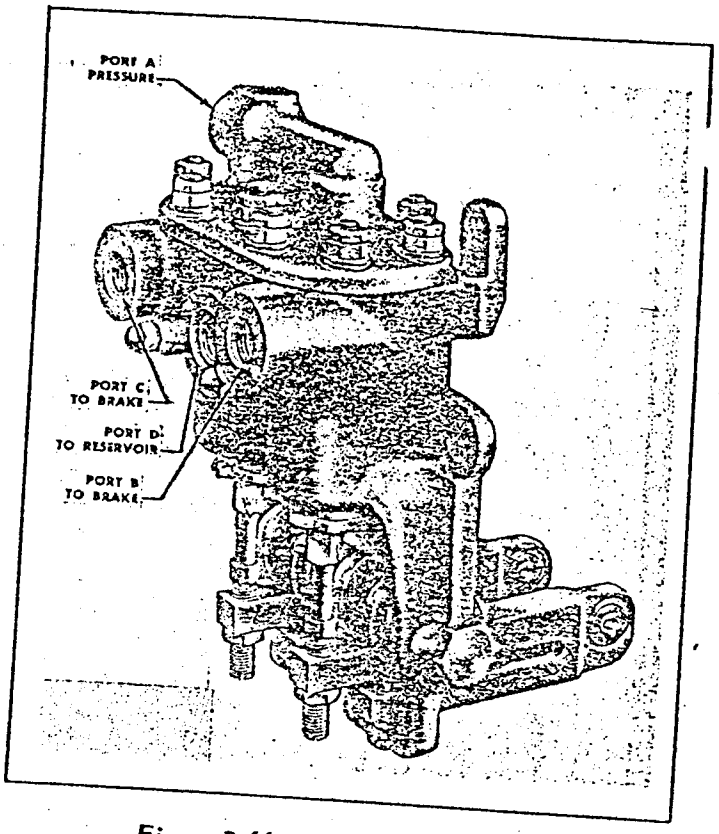

Figure 3-66. Brake Control Valve Test Connections 33,341

3-242. TROUBLE SHOOTING OF STEAM HEATING AND VENTILATING SYSTEM. Trouble shooting of the steam heating and ventilating system is accomplished as outlined in table 3-22.

TABLE 3-22
TROUBLE SHOOTING - STEAM HEATING AND VENTILATING SYSTEM

TROUBLE	PROBABLE CAUSE	REMEDY
a. Steam system does not operate.	Steam shutoff valve does not open.	Remove and replace steam shutoff valve.
	Valve damaged.	Replace duct assembly.
	Control linkage faulty.	Replace or repair linkage.
	Ducts damaged or permitting leakage of warm air.	Replace badly damaged ducts. Repair small holes.

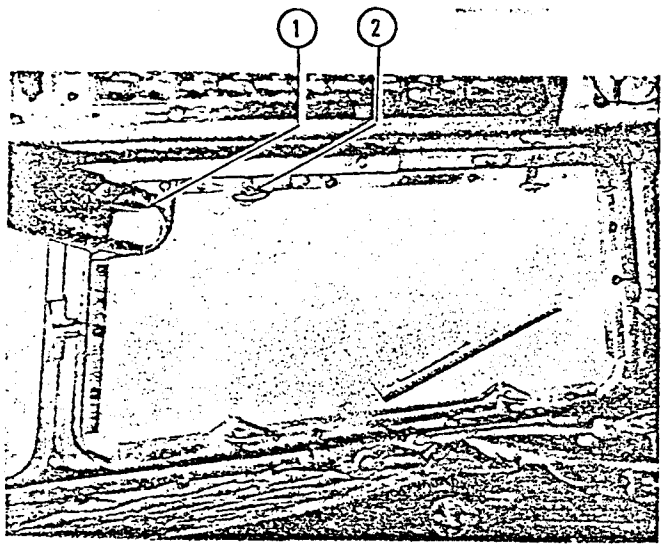

33,349

Figure 3-74. Windshield Defroster Shield Installed

Key to Figure 3-74	
Item	*Nomenclature*
1.	Hot Air Connection to Windshield
2.	Latch

3-290. STEAM HEATING SYSTEM WINDSHIELD DEFROSTING SHIELDS. *(See figure 3-74.)*

3-291. Two windshield defrosting shields are provided to install at the windshields during cold weather operations. An inlet located on one side of the shield permits hot air from the heating and ventilating system to be directed into the space between the windshields. Frost formation is prevented by the hot air flowing across the length of the windshield.

3-292. REMOVAL OF STEAM HEATING SYSTEM WINDSHIELD DEFROSTING SHIELD.

a. Disconnect the heating duct from the defrosting shield.

b. Turn the four latches and remove the windshield defrosting assembly.

3-293. INSTALLATION OF STEAM HEATING SYSTEM WINDSHIELD DEFROSTING SHIELD.

a. Position the windshield defrosting assembly and secure the four latches.

b. Connect the heating duct to the windshield defrosting shield.

3-294. STEAM HEATING SYSTEM OUTLETS, DUCTS, PIPES, HOSE, AND INSULATION. *(See figure 3-69.)*

3-295. Duct outlets located in the fuselage compartment are provided for the pilot's compartment foot warmer outlets, radio operator's outlet, and the main cargo compartment outlets. Flexible hose outlets are installed for the pilot's hand warmer, and for the outlets which direct hot air between the windshield defrosting shields and the main windshields. All of the steam ducts are fabricated of either steel or Monel metal. On some C-47 airplanes, corrosion-resistant steel ducts are installed, and the main cargo compartment ducts are constructed of plywood or aluminum alloy. Asbestos, Stonefelt, or fiberglass covering is installed as insulation material throughout the airplane.

3-296. REMOVAL OF STEAM HEATING SYSTEM DUCTS, PIPES, AND HOSE. Disconnect the ducts, pipes, and hose at the connecting joints, and remove them.

3-297. INSTALLATION OF STEAM HEATING SYSTEM DUCTS, PIPES, AND HOSE.

a. Position and connect the ducts, pipes, and hose.

b. Check the connections at the joints for airtight fit.

3-298. HOT AIR HEATING AND VENTILATING SYSTEM (SOME C-47 AIRPLANES).

3-299. GENERAL DESCRIPTION. *(See figure 3-67.)* The hot air heating system, installed on some C-47 airplanes, consists of two exchangers, two mixing chambers, four critical temperature warning lights, two critical temperature thermoswitches, and the necessary airscoops, ducts, tubing, hose, outlet valves, controls, and control linkages. Two windshield defrosting shields, when installed, serve as baffles for the outer windshield defrosting.

3-300. OPERATION OF HOT AIR HEATING SYSTEM (SOME C-47 AIRPLANES). Ram air enters the two muff-type heat exchangers which are an integral section of the engine exhaust tailpipe. Exhaust tailpipes heat the incoming air, which is then routed to the applicable mixing chamber *(see figures 3-75 through 3-85)*. The ram air and heated air are mixed in the chamber to controlled proportions, to regulate the temperature of the air flow into the airplane. Air is routed through ducts to the pilot's footwarmer outlets, astrodome outlet, navigator's outlet, navigator's hand warmer outlet, radio operator's outlet, radio operator's hand warmer outlet, and the main cargo compartment outlets. An emergency spill valve outlet is provided for the system in each nacelle. The controls which regulate the outlet openings are installed in

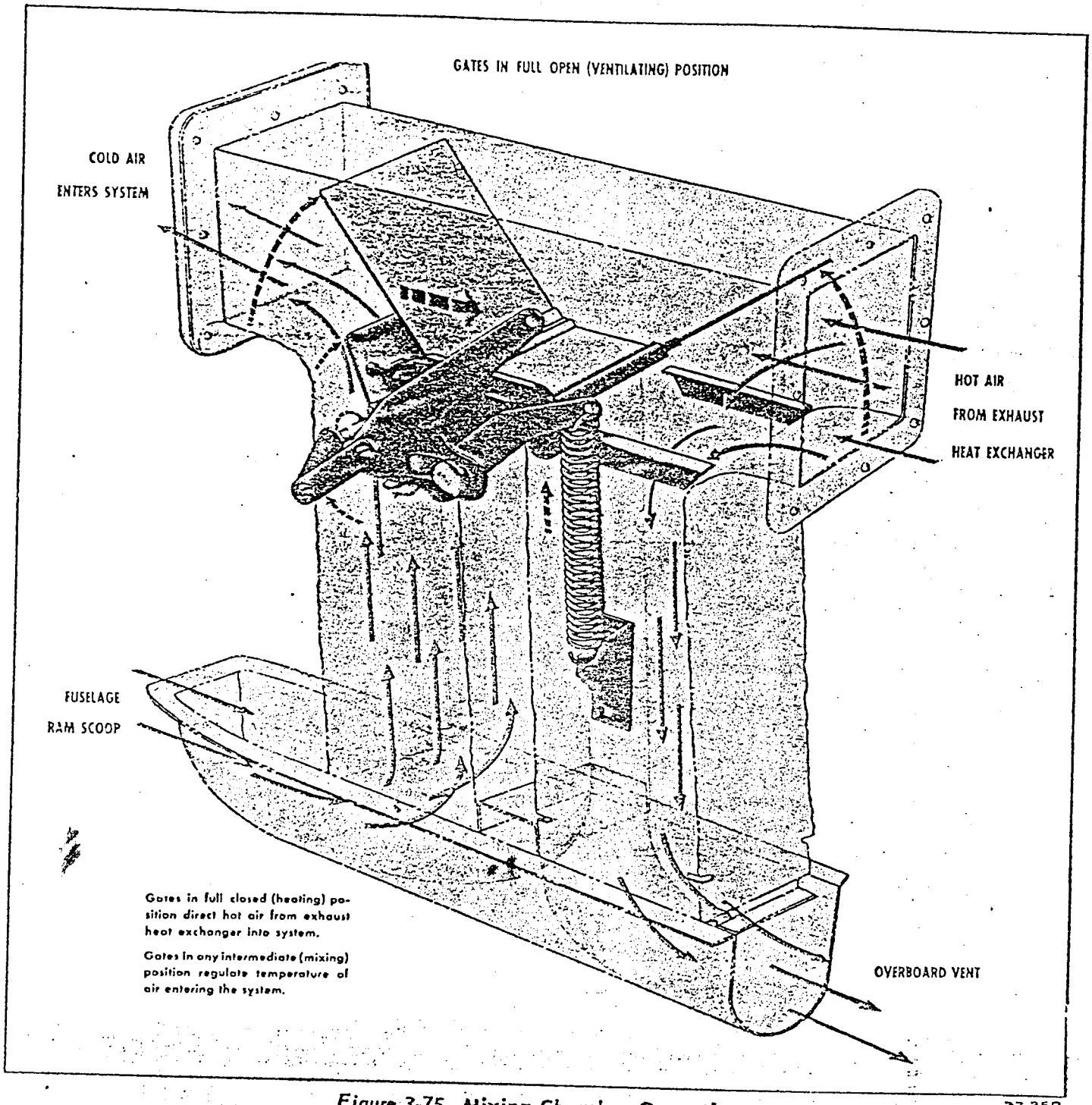

Figure 3-75. Mixing Chamber Operation

33,350

a control box located on the floor aft of the radio operator's chair, and on some C-47 airplanes, they are located next to the outlet openings. The five controls located within the control box regulate the right side emergency spill valve, the left side emergency spill valve, the left side mixing chamber, the right side mixing chamber, and the cross-feed (bypass) control for single-engine operation of the system. The first three controls incorporate a flexible push-pull linkage connection to the applicable outlet valves; the other two controls have rod linkages.

3-301. A critical temperature thermoswitch installed in each spill valve assembly illuminates the critical temperature warning light when the temperature exceeds 232°C (450°F). Two lights are installed in the pilots' compartment and two are installed in the radio operator's compartment. The left light in each compartment illuminates when the left thermoswitch reacts to excessive temperature. The right light illuminates when the right thermoswitch reacts. The radio operator must open the proper spill valve immediately after a warning light indication, to allow all of

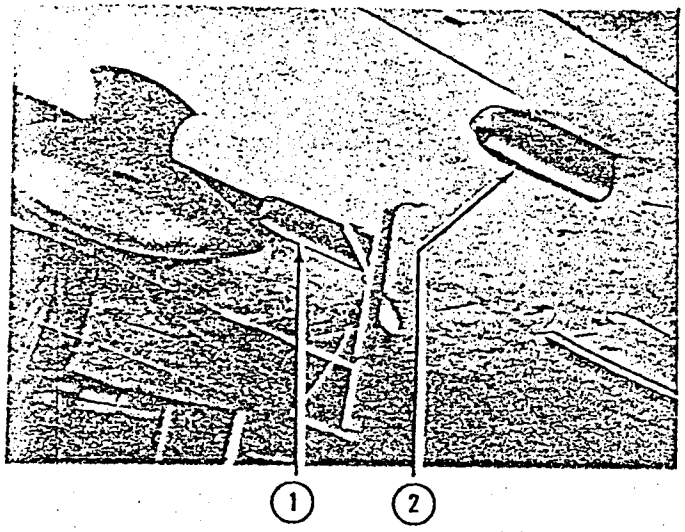

33,351

Figure 3-76. Airscoops to Mixing Chambers (Some C-47 Airplanes)

Key to Figure 3-76	
Item	*Nomenclature*
1.	Air Intake Scoop — Right-Hand Mixing Chamber
2.	Air Intake Scoop — Left-Hand Mixing Chamber

the heated air to escape overboard. The spill valve will be closed again when the light goes off.

WARNING

The pilot, co-pilot, and radio operator must be alert when a critical temperature warning light illuminates. The pilot or co-pilot must open the applicable emergency spill valve *immediately* if the radio operator fails to do so. There must be no obstruction in the ducts to restrict the flow of air through the exchangers at any time. High temperatures will occur and burn out the exchangers if the air flow is blocked off. Ample ventilation is available when the mixing chamber valves are positioned to allow the outside air to enter the fuselage and at the same time prevent entrance of heated air from the heat exchangers. Open the emergency spill valves to prevent any unnecessary accumulation of heat in the nacelle section.

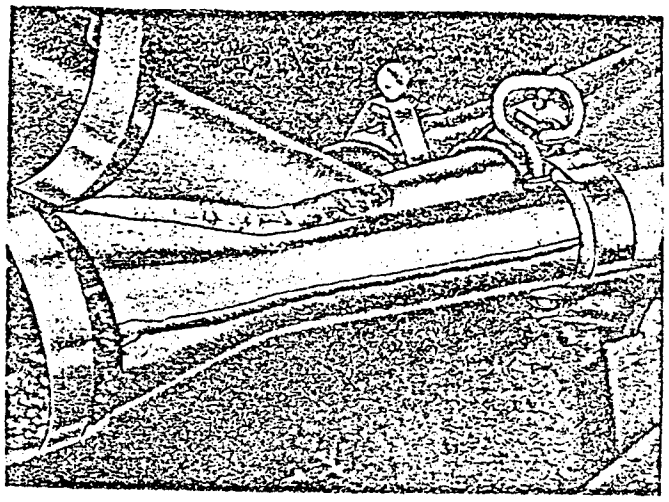

33.352

Figure 3-77. Five-Way Branch Ducts, Hot Air System (Some C-47 Airplanes)

3-302. TROUBLE SHOOTING OF HOT AIR HEATING SYSTEM (SOME C-47 AIRPLANES). Trouble shooting of the hot air heating system is accomplished as outlined in table 3-23.

TABLE 3-23
TROUBLE SHOOTING - HOT AIR HEATING SYSTEM (SOME C-47 AIRPLANES)

TROUBLE	PROBABLE CAUSE	REMEDY
Hot air systems operate improperly.	Component parts faulty or damaged.	Replace or repair component parts.
	Connections between ducts and component parts insecure.	Tighten connections.
	Controls incorrectly attached or damaged.	Correct attachments. Replace control or control part.
	Critical temperature warning light fails to illuminate.	Check wiring and bulbs.
	Emergency defroster blower fails to operate.	Check wiring. Check duct connections.

33,353

Figure 3-78. Pilot's Hot Air Control (Some C-47 Airplanes)

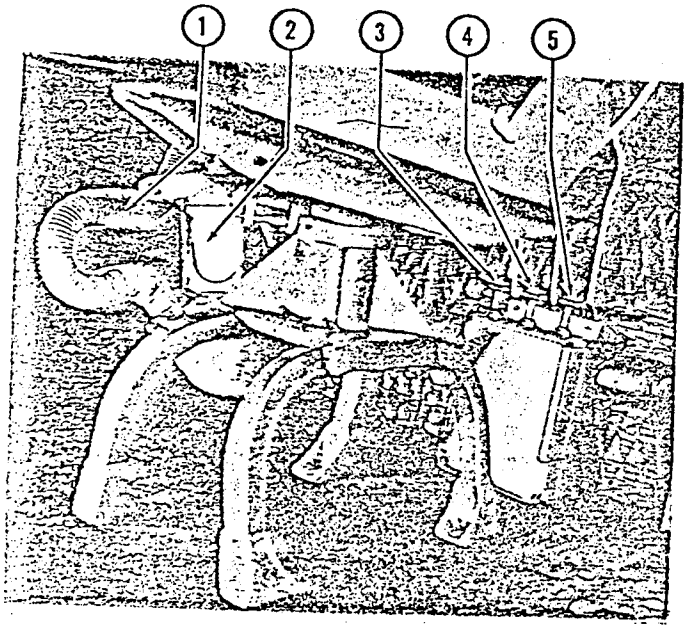

33,354

Figure 3-79. Hot Air System, Outlets and Controls, Radio Operator's Compartment (Some C-47 Airplanes)

Key to Figure 3-79.

Item	Nomenclature
1.	Flexible Hose Hand Warmer Outlet
2.	Warm Air Outlet
3.	RH Emergency Spill Valve Control
4.	LH Emergency Spill Valve Control
5.	LH Mixing Chamber Control

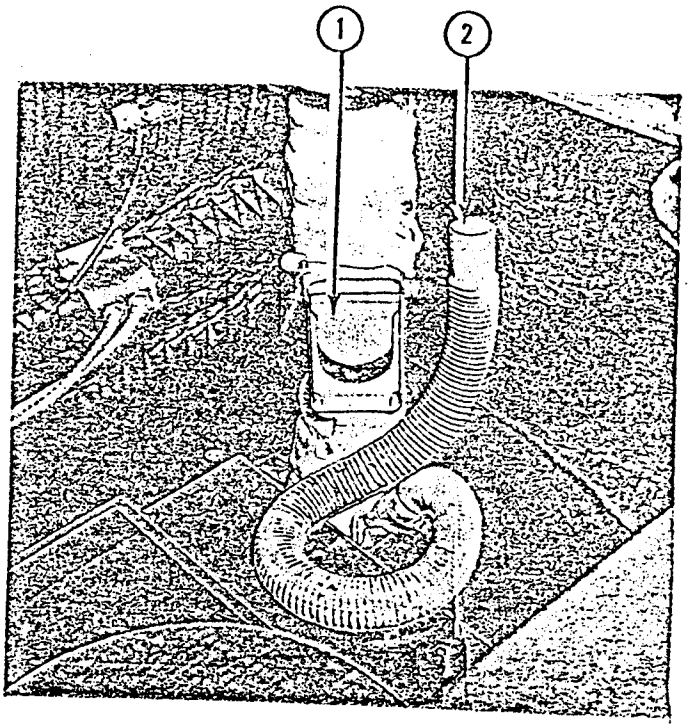

33,355

Figure 3-80. Hot Air System Outlets, Navigator's Compartment

Key to Figure 3-80

Item	Nomenclature
1.	Warm Air Outlet
2.	Flexible Hose Hand Warmer Outlet

3-303. REMOVAL AND INSTALLATION OF COMPONENTS OF HOT AIR HEATING SYSTEM (SOME C-47 AIRPLANES). Removal and installation of the hot air heating system components are accomplished as outlined in the following paragraphs.

3-304. HOT AIR HEATING SYSTEM MUFF-TYPE HEAT EXCHANGERS.
(See figures 3-67, 3-85, and 3-86.)

3-305. A muff-type heat exchanger, installed around each exhaust tailpipe, heats the air which is then circulated to the fuselage compartments. A connecting air inlet admits outside air to the heat exchanger. The air in the heat exchanger is heated by the engine exhaust gases and the heated air flows through a duct into a mixing chamber. An exhaust extension on the outlet end of the tailpipe allows gases to be directed downward below the surface of the wings. The exhaust extension outlet is not required when the steam heating system is installed.

3-306. REMOVAL OF HOT AIR HEATING SYSTEM MUFF-TYPE HEAT EXCHANGER.

a. Remove the bolts from the brackets and links.

b. Lift the exchanger from its position.

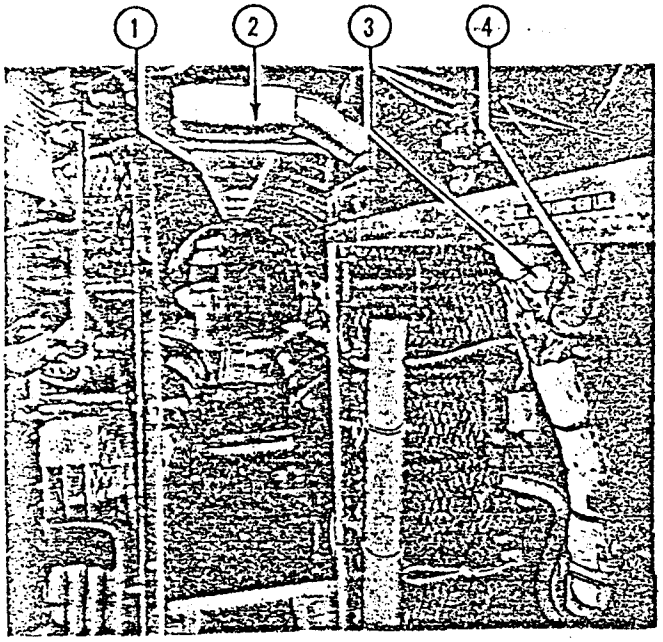

33,356

Figure 3-81. Hot Air System, Looking Aft (Some C-47 Airplanes)

Key to Figure 3-81.

Item	*Nomenclature*
1.	Main Cargo Compartment Duct
2.	Connection
3.	Hose to Electric Windshield Defroster Blower (plug inserted on some airplanes)
4.	Hose to Four-Way Branch Assembly

c. Remove the blanket from the assembly unit. The emainder of the heater is welded to the exhaust ailpipe.

-307. INSTALLATION OF HOT AIR HEATING SYSTEM MUFF-TYPE HEAT EXCHANGER. *(See figure 3-87).*

a. Secure the extreme aft top adjustable link to the racket.

b. Insert the bolt through the bracket holes and he link head.

c. Tighten the nut against the bracket.

d. Secure the side adjustable link to the bracket.

e. Insert the holding pin into the top front bracket.

f. Secure the forward lower flange area to the firewall.

g. Remove the pin from the bracket. Replace with an AN4-12A bolt.

Note

Five AN960-416 steel washers are installed on the bolt between the flange and side or sides of the bracket.

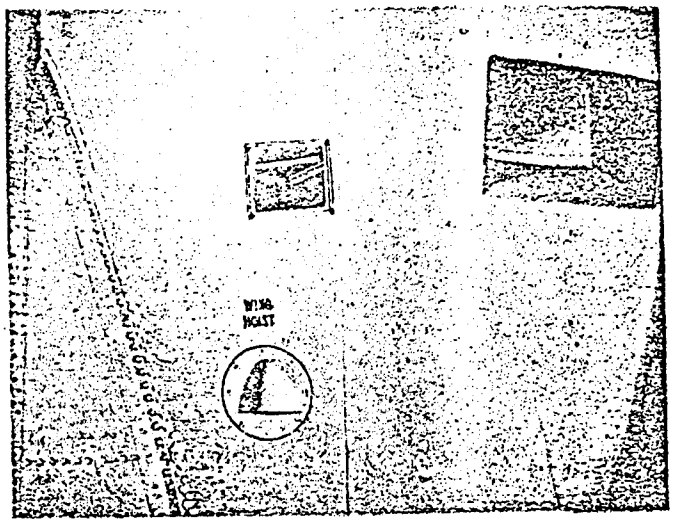

33,357

Figure 3-82. Emergency Spill Valve (Above Wing Hoist)

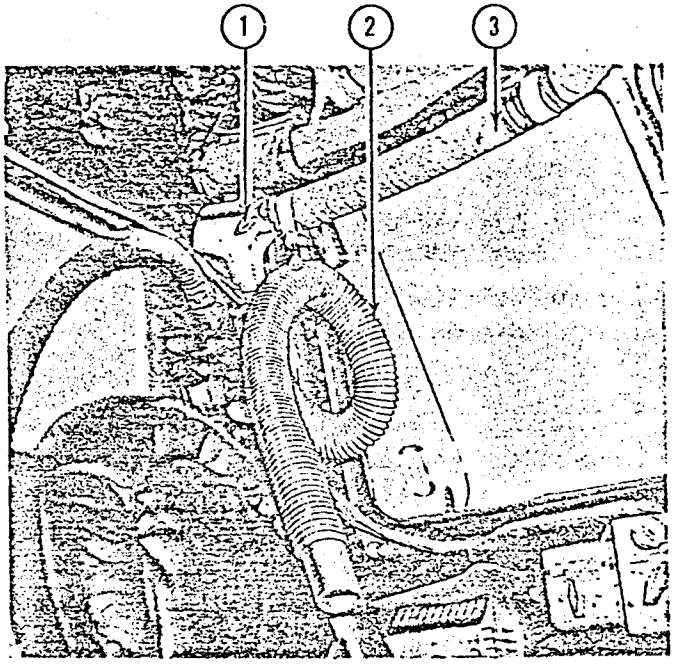

33,358

Figure 3-83. Hot Air System Components Above Pilot's Seat

Key to Figure 3-83

Item	*Nomenclature*
1.	Outlet Valve Controls
2.	Flexible Hose Warm Air Outlet
3.	Hose to Windshield

h. Secure the middle top adjustable link to the bracket.

3-308. TEST AFTER INSTALLATION OF HOT AIR HEATING SYSTEM MUFF-TYPE HEAT EXCHANGER.

a. Test the heat exchanger to 20 psi air pressure.

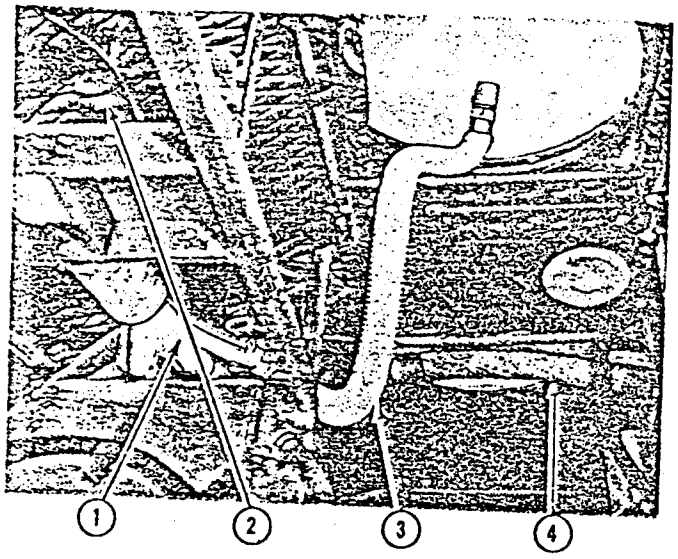

33,359

Figure 3-84. Hot Air System Components Above Navigator's Compartment and Passageway

Key to Figure 3-84	
Item	*Nomenclature*
1.	Four-Way Branch Outlet to Windshield
2.	Hose to Electric Windshield Defroster Blower (plug inserted on some airplanes)
3.	Flexible Hose to Astrodome
4.	Defroster Hose Leading to Windshield

b. Leakage should not exceed a rate of 9 psi in an hour.

3-309. HOT AIR HEATING SYSTEM MIXING VALVE ASSEMBLY (MIXING CHAMBER).

(See figures 3-67 and 3-75.)

3-310. Mixing chambers, one located on each side ~~of~~ the fuselage, are provided to mix the cold and heated air in proportions necessary to maintain the desired temperature in the fuselage compartments. One mixing chamber is connected by a duct to the left heat exchanger and the other is connected to the right heat exchanger. An airscoop assembly is installed at the bottom of each mixing chamber. The airscoop duct, located on the bottom of the fuselage, routes outside air into the forward section of the mixing chamber. The aft opening ducts hot air from the aft section of the mixing chamber. A valve assembly, located at the top of each vertical section of the mixing chambers, permits cool and warm air to mix in various proportions to provide the desired temperature when the valve controls are manually operated. The operation of the applicable control from the full HOT or full COLD position allows for any proportion of cool air and hot air to be mixed as required. A maximum amount of hot air and a minimum amount of cool air enters the fuselage compartments when the control is positioned in full HOT position. When the control is placed in the full COLD position a minimum amount of hot air and a maximum amount of cool air enters the fuselage compartments.

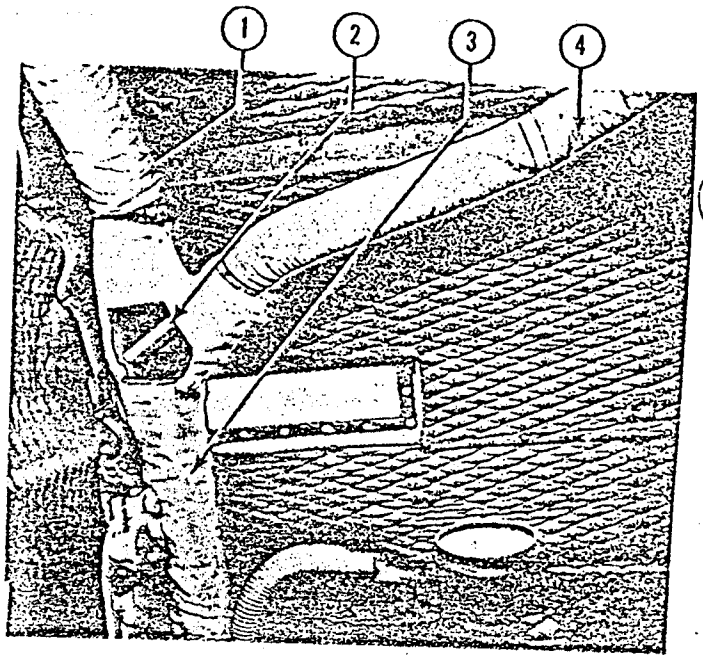

33,360

Figure 3-85. Hot Air System Components, Navigator's Compartment (Some C-47 Airplanes)

Key to Figure 3-85	
Item	*Nomenclature*
1.	Duct to Main Cargo Duct
2.	Outlet Valve Control
3.	Duct to Outlet
4.	Duct to Windshield

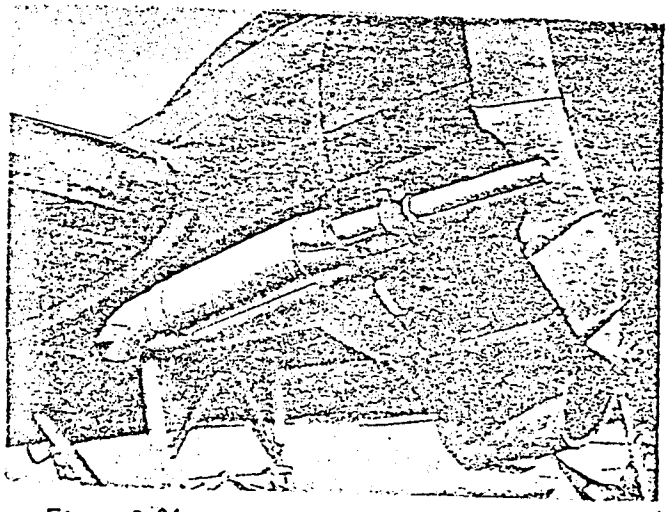

Figure 3-86. Heat Exchanger Installed (Hot-Air Type System)

33,361

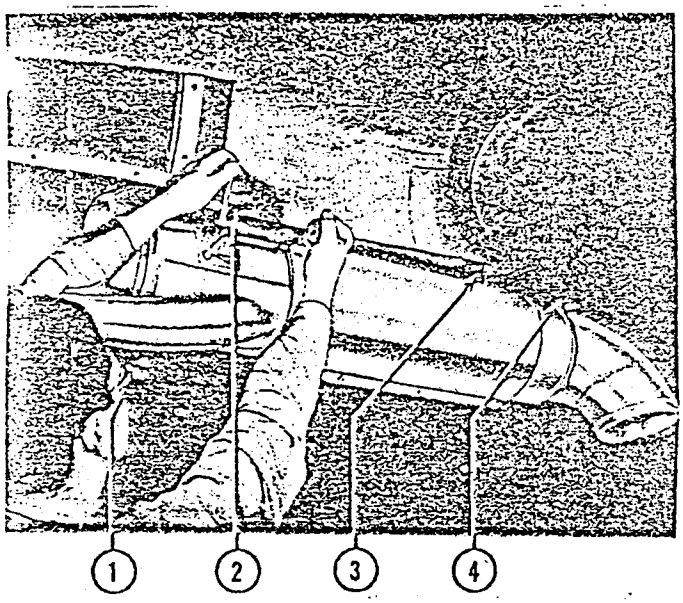

33,362

Figure 3-87. Attaching Muff-Type Heat Exchanger

Key to Figure 3-87	
Item	*Nomenclature*
1.	Attachment to Firewall
2.	Top Front Attachment
3.	Top Adjustable Link Attachment
4.	Rear Adjustable Link

3-311. REMOVAL OF HOT AIR HEATING SYSTEM MIXING VALVE ASSEMBLY (MIXING CHAMBER).

a. Remove the floor panel located above the mixing chamber, if necessary.

b. Disconnect the ducts from the mixing chamber.

c. Disconnect the control linkage.

d. Remove the screws from the airscoop assembly.

e. Disconnect and remove the mixing chamber from the airscoop assembly.

3-312. INSTALLATION OF HOT AIR HEATING SYSTEM MIXING VALVE ASSEMBLY (MIXING CHAMBER).

a. Connect the mixing chamber to the airscoop assembly, and secure it with the screws.

b. Connect the control linkage unit.

c. Connect the ducts to the mixing chamber and replace the screws.

d. Replace the floor panel above the mixing chamber.

3-313. HOT AIR HEATING SYSTEM DUCTS, FLEXIBLE HOSE, AND OUTLETS.

(See figures 3-67 and 3-88.)

3-314. All ducts are constructed of welded aluminum, with the exception of the corrugated tube duct located at the aft end of each muff-type heat exchanger. Duct outlets are provided for the pilots' footwarmer heat outlets, radio operator's heat outlet, navigator's heat outlet, the main cargo compartment duct outlets, and the emergency spill valve outlets. The main cargo compartment duct outlets and the emergency spill valve outlets vent the excess hot air into the atmosphere. Flexible hose outlets are used wherever it is necessary to change the position of the heat outlets, and are provided for the pilots' outlets, windshield defroster outlets, astrodome defroster hose, radio operator's hose, and the navigator's hose outlet.

3-315. REMOVAL OF HOT AIR HEATING SYSTEM DUCTS, FLEXIBLE HOSE, AND OUTLETS.

a. Remove the ducts, hose and attaching parts. Number the parts to facilitate installation.

b. Remove the floor panels or work through the access doors as necessary.

c. Remove the insulation from the duct where necessary.

d. Disconnect the hose or ducts at the joints.

3-316. INSTALLATION OF HOT AIR HEATING SYSTEM DUCTS, FLEXIBLE HOSE, AND OUTLETS.

a. Arrange numbered ducts and hose for installation.

b. Apply sealing compound to the ducts.

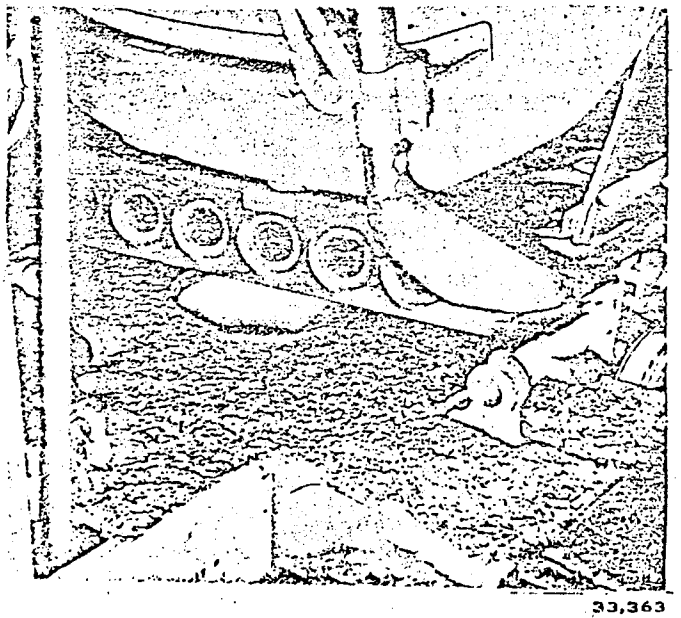

33,363

Figure 3-88. Pilot's Heat Outlet

c. Check all the duct joints for leakage.

d. Replace the floor panels, if removed.

3-317. HOT AIR HEATING SYSTEM CONTROLS AND VALVES.
(See figures 3-67, 3-73, and 3-89.)

3-318. Three types of controls are used in the hot air system. The first type consists of a flexible push-pull linkage between the control plunger and the applicable valve. Controls of this type are attached to the right side spill valve, the left side spill valve, and the left side mixing chamber. The second type consists of a mechanical linkage between the plunger and the connected valve. Controls of this type attach to the right side mixing chamber and the bypass valve. The local controls incorporating mechanical linkages are located next to the outlets. Controls directly attached to the mixing chambers regulate the temperature of the air in the fuselage compartments. The valves throughout the entire system are of the butterfly or flap type.

3-319. REMOVAL OF HOT AIR HEATING SYSTEM CONTROLS AND VALVES.

a. Start at the valve when removing the units and work toward the point of control.

b. Number the parts as they are removed to facilitate reinstallation.

c. Do not remove or disconnect the controls incorporated with the valves. Remove the entire duct assembly containing the control.

3-320. INSTALLATION OF HOT AIR HEATING SYSTEM CONTROLS AND VALVES.

a. Arrange the numbered parts for installation.

b. Position and connect the duct assembly.

3-321. TEST AFTER INSTALLATION OF HOT AIR HEATING SYSTEM CONTROLS AND VALVES.

a. Check all the controls for freedom of movement.

b. Correct the attachment and the movement as required.

3-322. HOT AIR HEATING SYSTEM THERMOSWITCHES AND WARNING LIGHTS.
(See figure 3-67.)

3-323. The two critical temperature thermoswitches energize the critical temperature warning lights when the hot air heating system temperatures exceed 232°C (450°F). One switch is installed in each emergency spill valve. Two warning lights are installed in each compartment for the pilot and the radio operator. Illumination of the warning lights informs the crew that the spill valve must be opened immediately. Refer to Section VIII for removal and installation procedures.

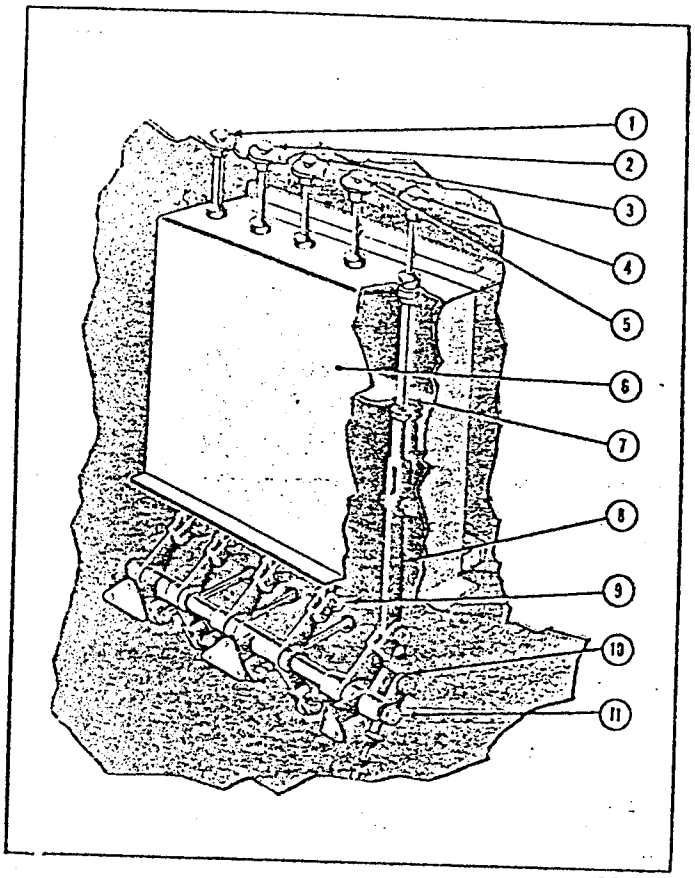

33,364

Figure 3-89. Control Box, Five Button Plunger (C-47 Airplanes)

Key to Figure 3-89

Item	*Nomenclature*
1.	RH Nacelle Emergency Spill Valve Control
2.	LH Nacelle Emergency Spill Valve Control
3.	LH Mixing Chamber Control
4.	Bypass (Cross-Feed) Control
5.	RH Mixing Chamber Control
6.	Box Assembly
7.	Lever Assembly
8.	Link Assembly
9.	Lever Assembly
10.	Lever Assembly
11.	Shaft

3-324. HOT AIR HEATING SYSTEM EMERGENCY DEFROSTER WINDSHIELDS.
(See figure 3-70.)

3-325. Emergency defroster windshields provided are identical for all systems. Refer to paragraph 3-291.

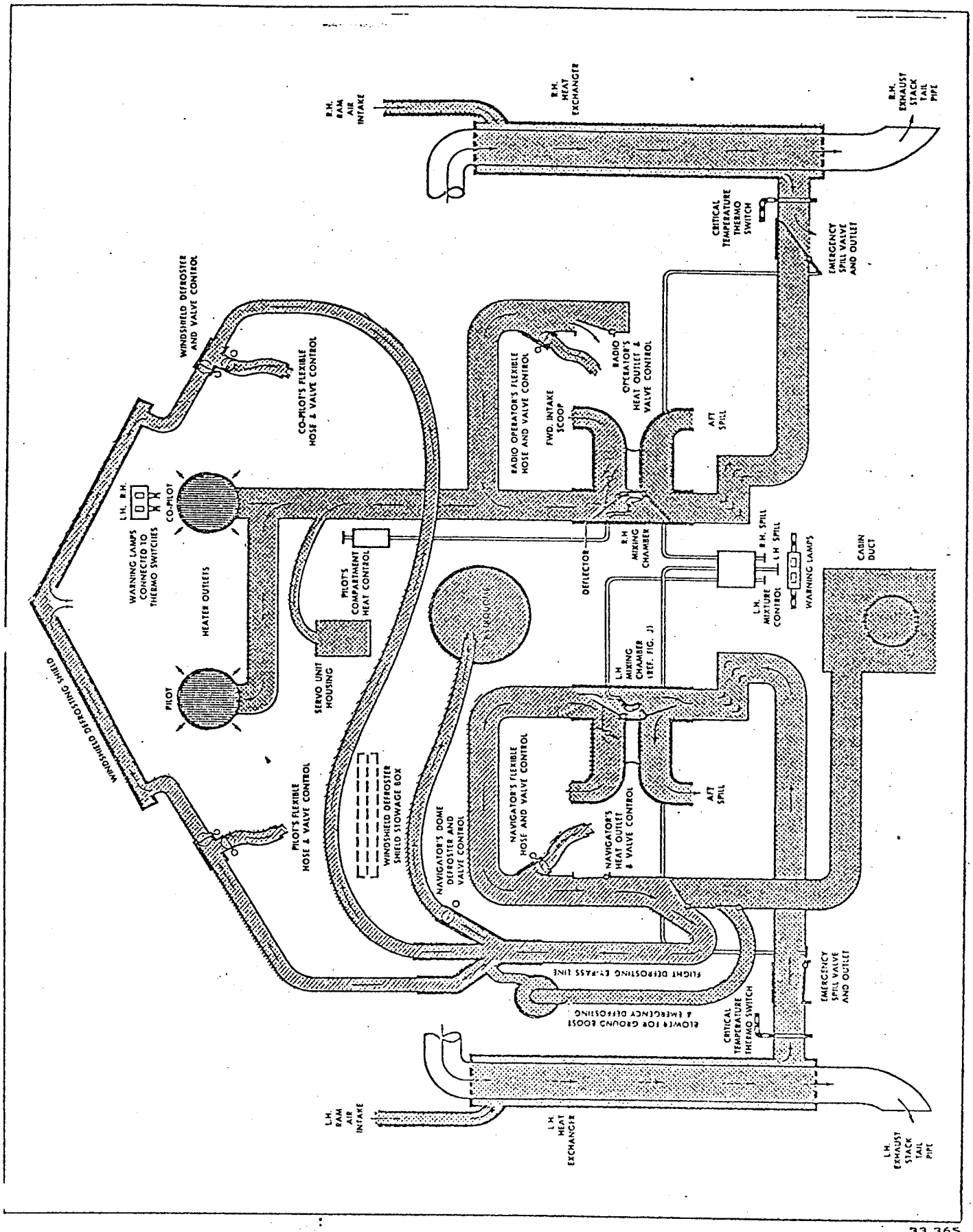

33,365

Figure 3-90. Hot Air System (Some C-47 Airplanes)

3-326. HOT AIR HEATING AND VENTILATING SYSTEM (LATE C-47 AIRPLANES).

3-327. GENERAL DESCRIPTION. *(See figures 3-70 and 3-90.)* This hot-air type heating and ventilating system differs from the other hot-air type system installed on C-47 airplanes in the following respects: The cross-feed bypass duct for single-engine operation of the system and the right side duct have been removed and an electrical defrosting blower is installed for the windshield and astrodome defrosting in case of an emergency or during ground operation. A duct is installed to supply heat to the autopilot servo unit. The control box, located on the floor behind the radio operator's compartment, has been revised to include only the controls regulating the two emergency spill valves and the left side mixing chamber. The cross-feed bypass control is located behind the co-pilot's seat. The right engine muff-type heat exchanger supplies heat to the right mixing chamber where it is mixed with incoming cool air to regulate the temperature. This mixed air flows through ducts into the flight compartment to the pilots' footwarmer outlets, radio operator's heat, and flexible hose hand warmer outlets. The left engine muff-type heat exchanger operates together with the left mixing chamber to supply warm air to the main cargo compartment duct, defroster unit duct, and the navigator's compartment duct. From these main ducts warm air is routed to the astrodome defroster, windshield, pilots' and navigator's hand warmers, and the outlets in the main cargo compartment. The controls incorporate a flexible push-pull linkage which extends from the control to the applicable valve outlet. The controls adjacent to and integral with the outlet valve they control are the exceptions. When the defrosting outlets control *(see figure 3-91)* is positioned to the EMERGENCY DEFROST BLOWER ON position, it automatically actuates a spring-loaded switch and starts the electric motor of the emergency defrosting blower. The switch returns to its original position when the control is moved from the ON position, thus turning off the electric blower. The hot-air type system is similar in operation to the heating system outlined in paragraph 3-298.

3-328. TROUBLE SHOOTING OF HOT AIR HEATING AND VENTILATING SYSTEM (SOME C-47 AIRPLANES). Trouble shooting of the hot air heating and ventilating system is accomplished as outlined in paragraph 3-302.

3-329. REMOVAL AND INSTALLATION OF COMPONENTS OF HOT AIR HEATING AND VENTILATING SYSTEM (SOME C-47 AIRPLANES). Removal and installation of the components of the hot air heating and ventilating system are accomplished as outlined in the following paragraphs. Test procedures are outlined where applicable.

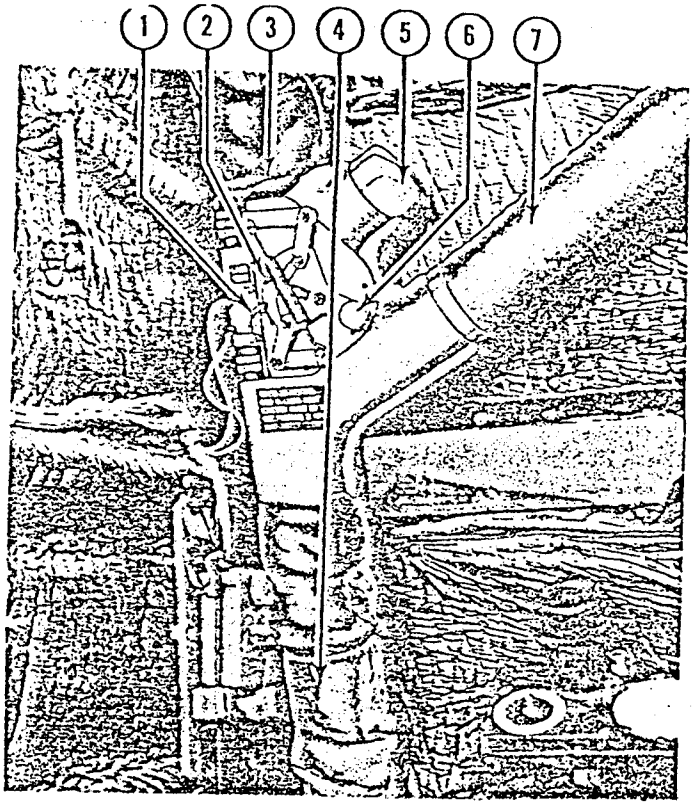

33,366

Figure 3-91. Navigator's Compartment Hot Air System (Some C-47 Airplanes)

Key to Figure 3-91

Item	Nomenclature
1.	Electric Defroster Blower Motor Switch
2.	Stop
3.	Duct to Main Cabin Duct
4.	Duct to Warm Air Outlet
5.	Duct to Electric Defroster Blower (plug inserted on some C-47 airplanes)
6.	Outlet Control
7.	Hose to Windshield Outlets

3-330. HOT AIR HEATING AND VENTILATING SYSTEM MUFF-TYPE HEAT EXCHANGER (SOME C-47 AIRPLANES).

(See figures 3-70 and 3-86.)

3-331 The muff-type heat exchangers are identical on both C-47 hot-air type heating and ventilating systems. Refer to paragraph 3-304.

3-332. HOT AIR HEATING AND VENTILATING SYSTEM MIXING VALVE ASSEMBLY (MIXING CHAMBER) (SOME C-47 AIRPLANES).

(See figures 3-67 and 3-75.)

3-333. The mixing valve assembly is identical on both of the C-47 hot-air type heating and ventilating systems. Refer to paragraph 3-309.

3-334. HOT AIR HEATING AND VENTILATING SYSTEM DUCTS, FLEXIBLE HOSE, AND OUTLETS (SOME C-47 AIRPLANES).
(See figures 3-67 and 3-70.)

3-335. For information concerning the hot air system ducts, flexible hose, and outlets for C-47 airplanes, refer to paragraph 3-313.

3-336. HOT AIR HEATING AND VENTILATING SYSTEM CONTROLS AND VALVES (SOME C-47 AIRPLANES).
(See figures 3-70 and 3-73.)

3-337. The two types of controls used in the hot air heating and ventilating system are the flexible push-pull linkage controls and the plunger-type controls which are linked to the outlet valve. The flexible push-pull linkage controls, installed in a box assembly located in the radio operator's compartment, are attached to the right spill valve, the left mixing chamber, and the right mixing chamber. The plunger-type control is installed behind the co-pilot's seat. The controls attached to the mixing chambers regulate the temperature of the air in the fuselage compartments.

3-338. REMOVAL OF HOT AIR HEATING AND VENTILATING SYSTEM CONTROLS AND VALVES. Begin at the valve and work toward the point of control for removal.

a. Number the parts as they are removed to facilitate reinstallation.

b. Disconnect and remove the duct assembly houseing the controls.

3-339. INSTALLATION OF HOT AIR HEATING AND VENTILATING SYSTEM CONTROLS AND VALVES.

a. Arrange the numbered parts to be installed.

b. Position and connect the entire duct assembly.

3-340. TEST AFTER INSTALLATION OF HOT AIR HEATING AND VENTILATING SYSTEM CONTROLS AND VALVES.

a. Check all the controls in the duct assembly for freedom of movement.

b. Correct and adjust the attachment and the movement of the controls.

3-341. HOT AIR HEATING AND VENTILATING SYSTEM THERMOSWITCHES AND WARNING LIGHTS (SOME C-47 AIRPLANES).

3-342. For information concerning the hot air heating and ventilating system thermoswitches and warning lights, refer to paragraph 3-322.

3-343. HOT AIR HEATING AND VENTILATING SYSTEM WINDSHIELD DEFROSTING SHIELDS (SOME C-47 AIRPLANES).
(See figure 3-74.)

3-344. For information concerning the hot air heating and ventilating system windshield defrosting shields, refer to paragraph 3-290.

3-345. HOT AIR HEATING AND VENTILATING SYSTEM ELECTRIC DEFROSTING BLOWER (SOME C-47 AIRPLANES).

3-346. On some C-47 airplanes, an electric defrosting blower is installed for the windshield defrosting system. This blower is used during emergency defrosting conditions. Placing the defrosting valve control in the EMERGENCY DEFROST BLOWER ON position automatically actuates a switch starting the blower. The switch turns off the blower when the defrosting valve control is moved from the EMERGENCY DEFROST BLOWER ON position.

3-347. REMOVAL OF HOT AIR HEATING AND VENTILATING SYSTEM ELECTRIC DEFROSTING BLOWER.

a. Disconnect the electric motor connector.

b. Disconnect the flexible hose.

c. Remove the attaching bolts and the blower from the bracket.

3-348. INSTALLATION OF HOT AIR HEATING AND VENTILATING SYSTEM ELECTRIC DEFROSTING BLOWER.

a. Fasten the bolts attaching the blower to the bracket.

b. Connect the electric motor connector.

3-349. TEST AFTER INSTALLATION OF HOT AIR HEATING AND VENTILATING SYSTEM ELECTRIC DEFROSTING BLOWER. Place the defrosting valve control in the EMERGENCY DEFROST BLOWER ON position and check the blower air volume at the windshield defrosting outlet.

3-350. HOT AIR HEATING AND VENTILATING SYSTEM AUXILIARY HEATER (SOME C-47 AIRPLANES).

3-351. Provisions are made on some C-47 airplanes for installing an engine-driven auxiliary heater unit in the main cargo compartment between stations 492 and 506.

3-352. HOT AIR HEATING AND VENTILATING SYSTEM (C-117 AIRPLANES).
(See figures 3-68 and 3-92.)

3-353. GENERAL DESCRIPTION. The heating and ventilating system on the C-117 airplanes consists of

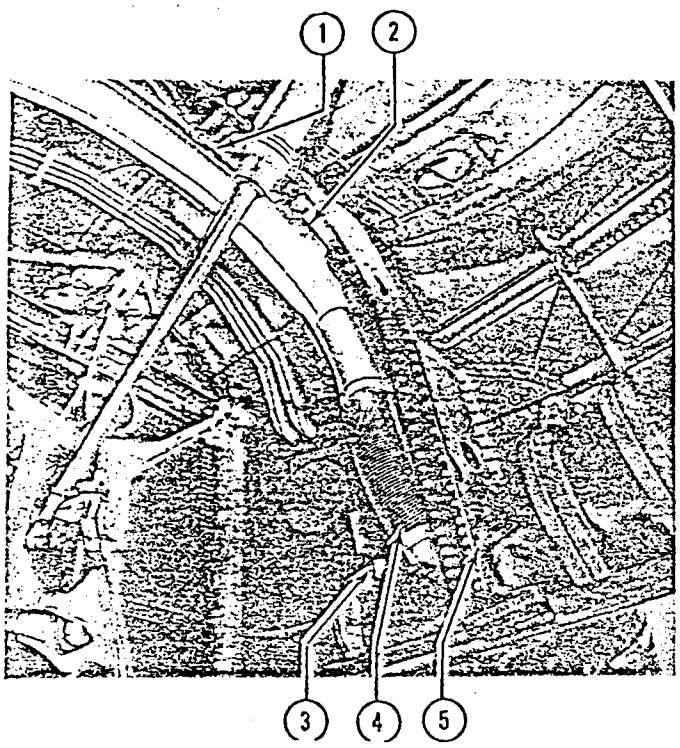

33,367

Figure 3-92. Nacelle Hot Air Installation

Key to Figure 3-92

Item	*Nomenclature*
1.	Push-Pull Control Assembly
2.	Emergency Spill Valve
3.	Adjustable Link Attachment
4.	Corrosion-Resistant Steel Duct
5.	Adjustable Link Attachment

two heat exchangers, a mixing chamber, two critical temperature thermoswitches, two windshield defrosting shields, airscoops, ducts, tubing, hose outlet valves, vents, controls, and control linkages.

3-354. OPERATION OF HOT AIR HEATING AND VENTILATING SYSTEM (C-117 AIRPLANES). The hot air system operates with heated ram air from two muff-type heat exchangers. The air is heated by the exhaust tailpipes and is routed from each heat exchanger to the mixing chamber. Air from the right engine heat exchanger flows to the mixing chamber and then to the pilots' compartment. A safeguard stop for the right heat exchanger, located on the pilot's bypass valve, permits no more than 80 per cent of the heated air to bypass the mixing chamber. Heated air and cold air are mixed as required to maintain the correct temperature in the passenger cabin and lavatory. Eight controls are installed for the hot air system. The main control box assembly contains six of the controls *(see figure 3-93)*, and is located behind the

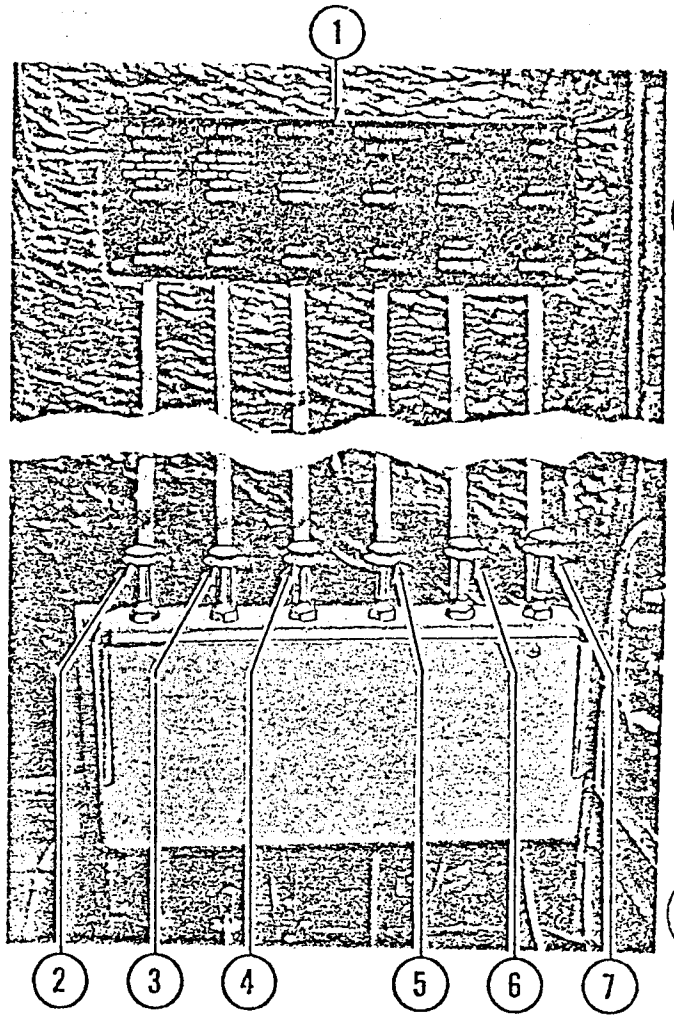

33,368

Figure 3-93. Heating and Ventilating System Control Box, Located Behind Co-Pilot (C-117 Airplanes)

Key to Figure 3-93

Item	*Nomenclature*
1.	Instruction Panel (above and aft of co-pilot's seat)
2.	Right Nacelle Spill Valve Control
3.	Left Nacelle Spill Valve Control
4.	Bypass Control
5.	Defroster Heat Control
6.	Cockpit and Maximum Defroster Heat Control
7.	Cold Air Control

co-pilot's seat at fuselage station 86. The six controls are for the pilot's cold air and bypass valves, the pilots' hot air, the defroster, and the right and left emergency spill valves. A seventh control for the defroster blower is located above and to the right of the main control box. The controls incorporate flexible push-pull linkages. The mixing chamber control is installed in a separate control box located on the right forward side

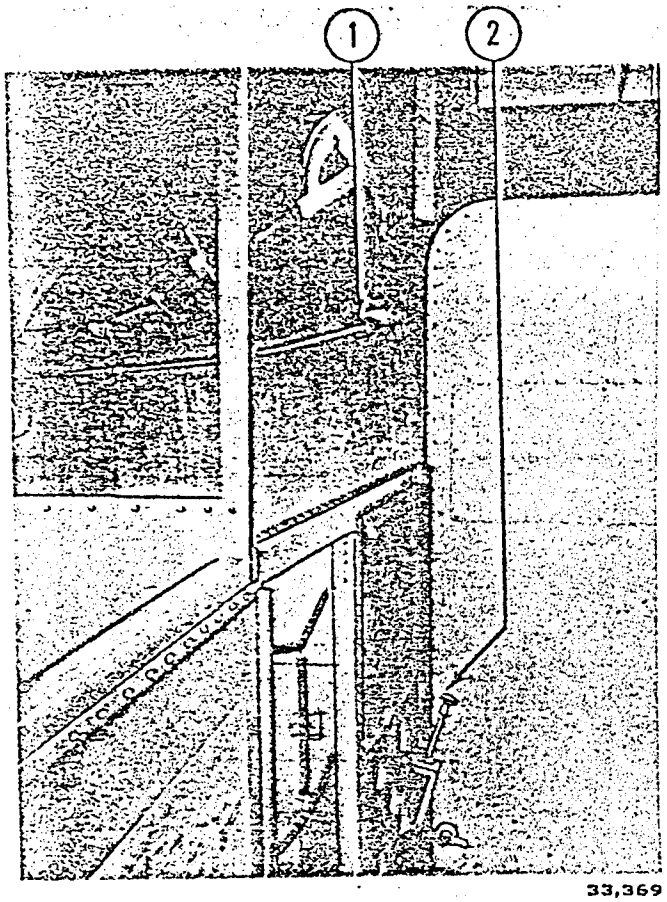

33,369

Figure 3-94. Cabin Ventilator and Heat Controls (C-117 Airplanes)

Key to Figure 3-94	
Item	*Nomenclature*
1.	Passenger Cabin Ventilator Control
2.	Passenger Cabin Heat Control

of the bulkhead forward of the main cabin. Two critical temperature thermoswitches illuminate the critical temperature warning lights located on the co-pilot's instrument panel, and indicate when the temperatures exceed 232°C (450°F).

CAUTION

The pilot or co-pilot must open the correct spill valve *immediately* whenever the warning light illuminates. The ducts must be free of obstructions at all times, as excessive temperatures occur and the exchangers burn out if the air is blocked off. Ample ventilation is available when the mixing chamber valves allow outside air to enter the fuselage while at the same time preventing the entrance of heated air from the heat exchangers. The emergency spill valves must be open to prevent any unnecessary accumulation of heat in the nacelle section. The spill valve will be closed again when the warning light goes out.

A carbon monoxide indicator located below the fuselage ceiling is provided at station 177.5.

3-355. Ventilation for the main passenger cabin of the airplane in flight is regulated by the two controls *(see figure 3-94)* located in the forward baggage compartments. Swivel-type air outlets at the passenger seat locations are installed in the ventilating ducts of the hatrack assemblies. A swivel-type air outlet supplies ventilating air to the lavatory. A ground air conditioning unit inlet provides for ventilation of the passenger cabin from an external source whenever the airplane is not in flight. The inlet connection is located on the right side of the fuselage at station 538, and attachment is made by raising a hinged door over the opening. The ventilating outlet to the passenger cabin is covered by a metal grill located in the wall aft of the buffet installation.

3-356. TROUBLE SHOOTING OF HOT AIR HEATING AND VENTILATING SYSTEM (C-117 AIRPLANES). Trouble shooting of the hot air heating and ventilating system is accomplished as outlined in table 3-24.

TABLE 3-24

TROUBLE SHOOTING - HOT AIR HEATING AND VENTILATING SYSTEM (C-117 AIRPLANES)

TROUBLE	PROBABLE CAUSE	REMEDY
Hot air system operates improperly.	Component parts damaged. Small leaks in ducts.	Repair or replace the component parts made of aluminum alloy, replace other damaged parts.
	Connecton between ducts and component parts insecure.	Tighten connection.
	Controls damaged or incorrectly attached.	Replace damaged control or control part. Correct attachment.

TABLE 3-24 (Continued)

TROUBLE	PROBABLE CAUSE	REMEDY
(Continued)	Critical temperature warning light fails to illuminate.	Check wiring. Check bulbs.
	Emergency defroster blower fails to operate.	Check wiring. Check duct connections.

3-357. REMOVAL AND INSTALLATION OF COMPONENTS OF HOT AIR HEATING AND VENTILATING SYSTEM (C-117 AIRPLANES). Removal and installation of the hot air heating and ventilating system components on the C-117 airplanes are accomplished as outlined in the following paragraphs.

3-358. HOT AIR HEATING AND VENTILATING SYSTEM MUFF-TYPE HEAT EXCHANGERS (C-117 AIRPLANES). *(See figures 3-87 and 3-95.)*

3-359. The muff-type heat exchangers are identical to those installed on the C-47 airplanes. Refer to paragraph 3-304.

3-360. HOT AIR HEATING AND VENTILATING SYSTEM MIXING VALVE ASSEMBLY (MIXING CHAMBER) (C-117 AIRPLANES). *(See figure 3-75.)*

3-361. The C-117 airplane hot air heating and ventilating system mixing chamber blends hot and cold air in the proportions necessary to maintain a desired temperature in the fuselage compartments. The mixing chamber is connected by two ducts. One duct routes to the left of the heat exchanger, and the other routes to the pilot's bypass duct from the right heat exchanger. An airscoop assembly is located on the bottom of the fuselage with one forward and one aft opening.

3-362. REMOVAL OF HOT AIR HEATING AND VENTILATING SYSTEM MIXING VALVE ASSEMBLY (C-117 AIRPLANES). Removal of the C-117 hot air system mixing chamber is accomplished as outlined in paragraph 3-311.

3-363. INSTALLATION OF HOT AIR HEATING AND VENTILATING SYSTEM MIXING VALVE ASSEMBLY (C-117 AIRPLANES). Installation of the C-117 hot air system mixing chamber is accomplished as outlined in paragraph 3-312.

3-364. HOT AIR HEATING AND VENTILATING SYSTEM DUCTS, FLEXIBLE HOSE, OUTLETS, VENTS, AND AIRSCOOPS (C-117 AIRPLANES). *(See figure 3-68.)*

3-365. A venturi and ducts, located at fuselage bulkhead station 117, are installed on C-117 and some C-47 airplanes. The duct provides adequate cooling for the main electrical junction box and generator voltage

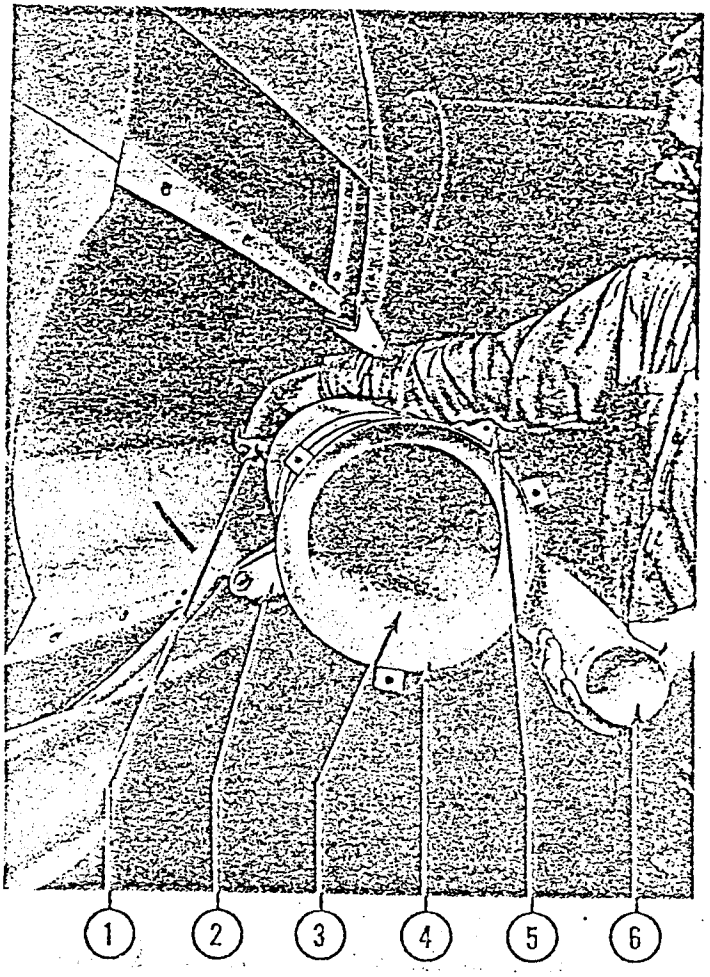

Figure 3-95. Installing Muff-Type Heat Exchanger

Key to Figure 3-95

Item	Nomenclature
1.	Side Adjustable Link Connection
2.	Heat Exchanger Projection — Bolt to Firewall
3.	Engine Tailpipe Exhaust
4.	Muff-Type Heat Exchanger*
5.	Top Forward Heat Exchanger Projection
6.	Cold Air Intake Connection

* The muff-type heat exchanger is an integral (welded) part of the exhaust tailpipe.

regulators. For additional information, refer to paragraph 3-313.

3-366. REMOVAL OF HOT AIR HEATING AND VENTILATING SYSTEM DUCTS, FLEXIBLE HOSE, OUTLETS, VENTS, AND AIRSCOOPS (C-117 AIRPLANES). Removal of the C-117 hot air system ducts, flexible hose, outlets, vents, and airscoops is described in paragraph 3-315.

3-367. INSTALLATION OF HOT AIR HEATING AND VENTILATING SYSTEM DUCTS, FLEXIBLE HOSE, OUTLETS, VENTS, AND AIRSCOOPS (C-117 AIRPLANES). Installation of the C-117 hot air system ducts, flexible hose, outlets, vents, and airscoops is described in paragraph 3-316.

3-368. HOT AIR HEATING AND VENTILATING SYSTEM CONTROLS AND VALVES (C-117 AIRPLANES).
(See figure 3-94.)

3-369. The hot air heating and ventilating system controls consist of flexible push-pull linkages between the control plunger and the valves. Six of the hot air system controls are installed in a control box assembly located aft of the co-pilot's seat. The control for the defroster blower is located above and to the right of the main control box. The mixing chamber control is located above the floor near the forward end of the main cabin heating ducts. Two flexible push-pull controls for the ventilating system are located on the rear wall of the front baggage compartment. One flexible push-pull control is located on the left side and one is located on the right side of the cabin entrance door. The control attached to the mixing chamber regulates the temperature of the air in the fuselage compartments. The other controls regulate the flow of air through the outlets. The valves throughout the heating and ventilating system are of the butterfly or flap type.

3-370. REMOVAL OF HOT AIR HEATING AND VENTILATING SYSTEM CONTROLS AND VALVES (C-117 AIRPLANES). On C-117 airplanes, removal of the hot air heating and ventilating system controls and valves is accomplished as described in paragraph 3-319.

3-371. INSTALLATION OF HOT AIR HEATING AND VENTILATING SYSTEM CONTROLS AND VALVES (C-117 AIRPLANES). On C-117 airplanes, installation of the hot air heating and ventilating system controls and valves is accomplished as described in paragraph 3-320.

3-372. TEST AFTER INSTALLATION OF HOT AIR HEATING AND VENTILATING SYSTEM CONTROLS AND VALVES (C-117 AIRPLANES). On C-117 airplanes, test after installation of the hot air heating and ventilating system controls and valves is accomplished as described in paragraph 3-321.

3-373. HOT AIR HEATING AND VENTILATING SYSTEM WINDSHIELD DEFROSTING SHIELDS (C-117 AIRPLANES).
(See figure 3-74.)

3-374. The windshield defrosting shields are similar to those used on C-47 airplanes. Refer to paragraph 3-290 for details.

3-375. REMOVAL OF HOT AIR HEATING AND VENTILATING SYSTEM WINDSHIELD DEFROSTING SHIELDS. Removal of the C-117 airplane hot air system windshield defrosting shields is accomplished as described in paragraph 3-292.

3-376. INSTALLATION OF HOT AIR HEATING AND VENTILATING SYSTEM WINDSHIELD DEFROSTING SHIELDS. Installation of the C-117 airplane hot air heating and ventilating system windshield defrosting shields is accomplished as described in paragraph 3-293.

3-377. HOT AIR HEATING AND VENTILATING SYSTEM ELECTRIC DEFROSTING BLOWER (C-117 AIRPLANES).

3-378. The C-117 airplane hot air heating and ventilating system electric defrosting blower is identical to the one installed on some C-47 airplanes. Refer to paragraph 3-345 for detailed information.

3-379. REMOVAL OF HOT AIR HEATING AND VENTILATING SYSTEM ELECTRIC DEFROSTING BLOWER (C-117 AIRPLANES). Removal of the C-117 airplane hot air heating and ventilating system electric defrosting blower is accomplished as outlined in paragraph 3-347.

3-380. INSTALLATION OF HOT AIR HEATING AND VENTILATING SYSTEM ELECTRIC DEFROSTING BLOWER (C-117 AIRPLANES). Installation of the C-117 airplane hot air system electric defrosting blower is accomplished as outlined in paragraph 3-348.

3-381. TEST AFTER INSTALLATION OF HOT AIR HEATING AND VENTILATING SYSTEM ELECTRIC DEFROSTING BLOWER (C-117 AIRPLANES). For the test procedure after installation of the hot air heating and ventilating system electric emergency defrosting blower, refer to paragraph 3-349.

3-382. HOT AIR HEATING AND VENTILATING SYSTEM THERMOSWITCHES AND WARNING LIGHTS (C-117 AIRPLANES).

3-383. The thermoswitches and warning lights on C-117 airplanes are similar to those installed on some C-47 airplanes. For detailed information, refer to paragraph 3-322.

3-384. HOT AIR HEATING AND VENTILATING SYSTEM CARBON MONOXIDE INDICATOR (C-117 AIRPLANES). *(See figure 3-96.)*

3-385. The carbon monoxide control box is located on the forward side of the front bulkhead of the passenger cabin. A red warning light and reset button are located beneath the flight instrument panel. Illumination of the warning light indicates the presence of carbon monoxide (CO) in the heating and ventilating system. A pipe connection from the vacuum system, interconnected with a hot air duct and indicator, supplies a flow of hot air from the heat exchanger and regulates the vacuum supply of from 2 to 4 inches of mercury (Hg). The air supply is considered safe if the float is located in the top position of the control box guard window.

WARNING

When the float is in the low position, the air supply is unsafe and extreme caution must be observed.

The slightest presence of carbon monoxide in the system activates a bimetallic element switch, illuminating the red warning light located at the instrument panel. Refer to Section VII for additional information regarding the carbon monoxide indicator. The reset button is operated manually to turn off the warning light. The warning light will illuminate again in 5 minutes if a dangerous amount of carbon monoxide is still present in the heating system.

Note

An electrical defect in the unit is evident when the percentage indicator on the control box indicates the presence of carbon monoxide and the light is not illuminated. An electrical defect is also evident when the indicator light remains on and the percentage dial does not indicate the presence of carbon monoxide. Press the reset button several times and if the light remains on, check the wiring and the control box unit.

3-386. REMOVAL OF HOT AIR HEATING AND VENTILATING SYSTEM CARBON MONOXIDE INDICATOR.

a. Remove the four screws from the control box.

b. Lift the control box from the shock mounts.

c. Disconnect the electrical and vacuum connections and remove the indicator.

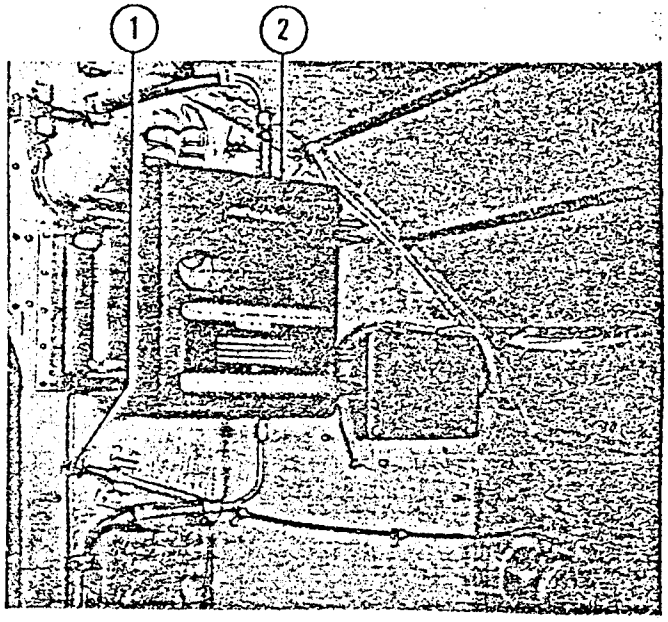

33,371

Figure 3-96. Cabin Cold Air Control and Carbon Monoxide Unit (C-117 Airplanes)

Key to Figure 3-96

Item	*Nomenclature*
1.	Passenger Cabin Cold Air Duct Control
2.	Carbon Monoxide Signal Assembly

3-387. TEST BEFORE INSTALLATION OF HOT AIR HEATING AND VENTILATING SYSTEM CARBON MONOXIDE INDICATOR.

a. Start the airplane engines.

b. Connect the inlet pipe from the hot air duct to the indicator and supply 0.010 per cent carbon monoxide.

c. Check the wiring and repeat the test if the indicator light does not illuminate.

d. Replace the control box if tests outlined in this paragraph do not correct the indicator light malfunction.

Note

A 50-hour service inspection of this type is recommended.

3-388. INSTALLATION OF HOT AIR HEATING AND VENTILATING SYSTEM CARBON MONOXIDE INDICATOR.

a. Connect the electrical and vacuum fittings.

b. Position the control box on the shock mounts.

c. Position the indicator and secure the four screws on the control box.

3-389. TEST AFTER INSTALLATION OF HOT AIR HEATING AND VENTILATING SYSTEM CARBON MONOXIDE INDICATOR.

a. The instrument is operative when the airplane batteries are switched on.

b. A warm-up period of 15 minutes is required. The signal light on the instrument panel may illuminate during this time, as this is characteristic of the signal assembly during the warm-up period. Press the reset button and the light will go off and remain off unless carbon monoxide is present in a greater concentration than 0.005 to 0.007 per cent.

c. The vacuum pipe functions properly if the float is positioned in the top area of the guard window.

d. When the warning signal light illuminates, check for the presence of carbon monoxide as follows:

e. *Left Engine:* With the left spill valve in the HEAT position and the right spill valve in the SPILL position wait a few seconds for the instrument to register on the dial.

f. *Right Engine:* Follow the same procedure for the right engine except reverse the spill valve positions.

3-390. INSTRUCTIONS FOR HEATING AND VENTILATING SYSTEMS WINTERIZATION. Specific instructions regarding winterization of the heating and ventilating systems in the C-47 and C-117 airplanes are contained in Section II.

3-391. DE-ICING SYSTEM.

3-392. GENERAL DESCRIPTION. *(See figure 3-97.)* Air-inflated rubber de-icing boots remove the ice from the leading edges of the wings and tail surfaces. The tubes incorporated in the wing boots are inflated alternately to crack the ice that has formed and the force of the airstream removes the ice.

3-393. Air pressure flows through two oil separators from the exhaust ports of the two engine-driven vacuum pumps, two check valves, an air filter, and a distributor valve to alternately expand each of the de-icing boots installed along the leading edges of the wings and along the horizontal and vertical stabilizers. A control system, incorporating a handle and the cables, switches the distributor valve motor ON or OFF through a control unit. A pressure relief valve in the air filter regulates the pressure of the system. A gage indicating the air pressure is located on the instrument panel and is connected by a pipe from the air filter.

Note

The vacuum side of the pump contains a suction pipe for the operation of the gyro instruments. Two valves are incorporated in the vacuum pipe. A vacuum-relief valve *(see figure 3-99)* controls the correct amount of suction to operate the gyro instruments. The check valve *(see figure 3-100)* prevents oil or dirt in the airflow from entering the gyro instruments in the event of pump reversal due to engine backfire (see Section VII).

3-394. TROUBLE SHOOTING OF DE-ICING SYSTEM. Trouble shooting of the de-icing system is accomplished as outlined in table 3-25.

TABLE 3-25.

TROUBLE SHOOTING - DE-ICING SYSTEM

TROUBLE	PROBABLE CAUSE	REMEDY
a. De-icing tubes do not inflate.	Distributor valve motor inoperative.	Replace distributor valve motor.
	Fuse blown or circuit breaker tripped.	Replace fuse. Check circuit.
	Loose or corroded battery terminals.	Clean and tighten connections.
	Brushes binding in brush boxes.	Replace brushes.
	Worn brushes.	Replace brushes.
	Dirty commutator.	Remove dirt and grease from commutator with solvent-moistened cloth. Smooth with No. 000 sandpaper. Do not use coarse sandpaper or emery cloth.
	Shorted, grounded or open motor field coils.	Replace motor.
	Control switch inoperative.	Insert jumpers across terminals. Replace switch if motor operates.

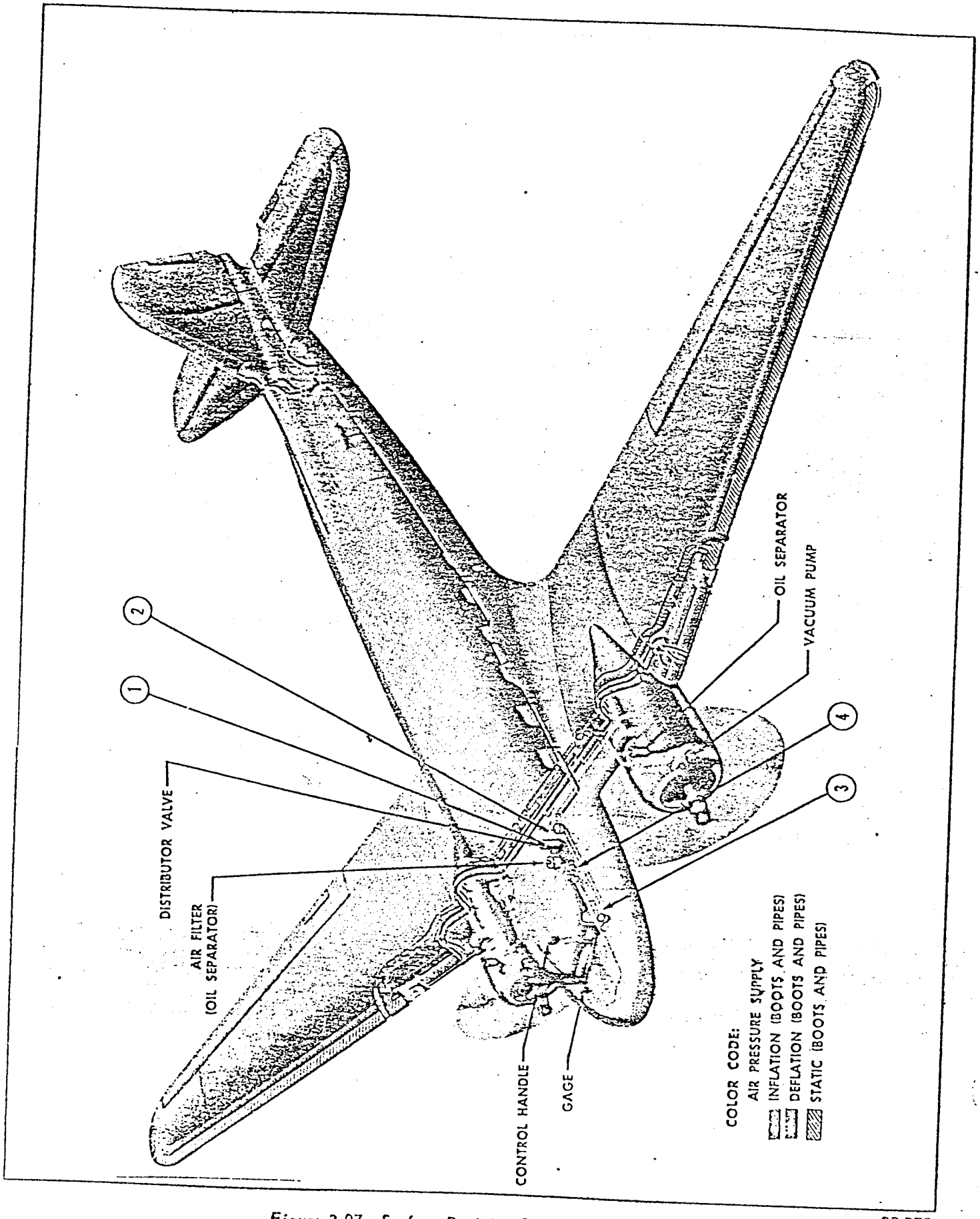

Figure 3-97. Surface De-icing System - Key Drawing

33,372

CABLE REF. NO.	DOUGLAS CABLE ASSEMBLY DRAWING NO.	NO. REQD	TYPE	CABLE LENGTH (L_1)	CABLE LENGTH (L_2)	CABLE SIZE	FITTINGS (1)	FITTINGS (2)	FITTINGS (3)	FITTINGS (4)
1	2074406ED	1	A	21 1/2		1/16 dia 7 x 7 flex.	AN66952RH	AN668-2		
2	2074406ED	1	A	27 1/2		1/16 dia 7 x 7 flex.	AN66952RH	AN668-2		
3	2119151-1	1	B	144		1/16 dia 7 x 7 flex.	S-2049220-8DS-2L	1111636		
4	2119151-3	1	B	138		1/16 dia 7 x 7 flex.	S-2049220-8DS-2L	1111636		

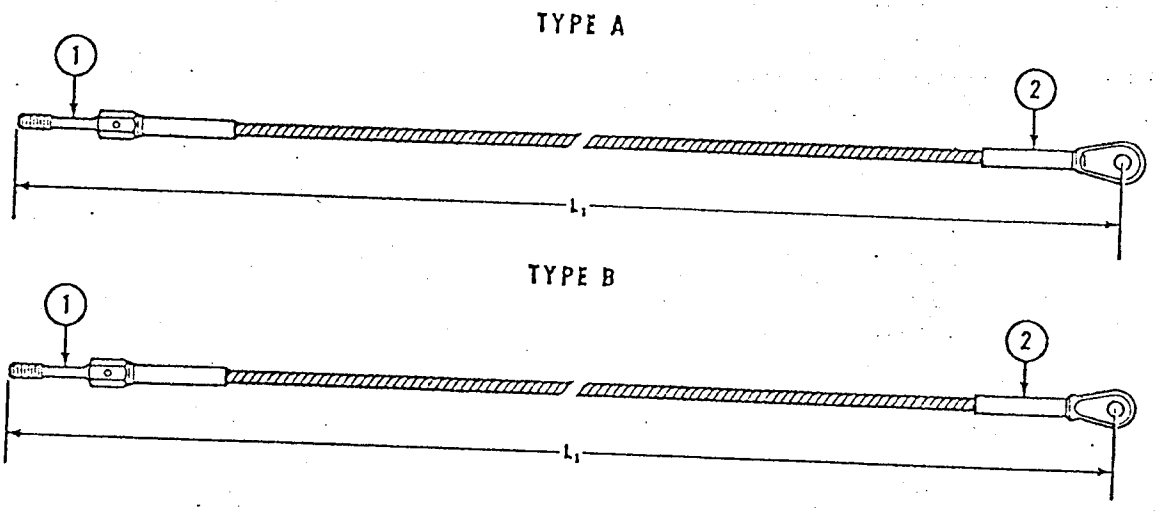

Figure 3-98. Surface De-Icing System - Cable Chart and Cable Assemblies

33,373

TABLE 3-25 (Continued)

TROUBLE	PROBABLE CAUSE	REMEDY
a. *(Continued)*	Large leak or break in pressure supply pipe between pumps or between separator and distributor valve.	Replace pipes or fittings.
	Obstruction in pipes connected to oil separator.	Disconnect and clean pipes.
b. Individual de-icing tubes do not inflate.	Large leak or break in pipe between distributor valve and de-icing boot.	Repair boot, connection, and/or fitting. Clean pipe.
c. Cycle of operations too slow (over 40 seconds).	Low power to distributor valve motor.	Recharge battery.
	Loose connections in control switch.	Tighten connections.
	Friction in roller bearings or moving parts in distributor valve assembly.	Replace unit.
d. De-icing boots remain inflated when switch is turned OFF.	Distributor valve autoswitch or switch wiring is faulty.	Replace switch. Replace wiring.

TABLE 3-25 (Continued)

TROUBLE	PROBABLE CAUSE	REMEDY
e. De-icing pressure gage reads too low (below 7 psi). Check preceding conditions first.	Relief valve in regulating oil separator incorrectly adjusted.	Adjust valve.
	Defective pressure gage.	Replace gage.
	Pressure gage pipe clogged.	Clean pipe.
f. De-icing pressure gage reads too high (above 8 psi). Check preceding conditions first.	Defective pressure gage.	Replace gage.
	Relief valve in regulating oil separator improperly adjusted.	Adjust valve.

3-395. **REMOVAL AND INSTALLATION OF COMPONENTS OF DE-ICING SYSTEM.** Removal and installation of the components of the de-icing system are accomplished as outlined in the following paragraphs. Disassembly, maintenance, assembly, and test procedures are outlined where applicable.

3-396. DE-ICING SYSTEM VACUUM PUMPS.
(See figures 3-101 and 3-102.)

3-397. The de-icing system vacuum pumps are bolted to the engine accessory case of each engine and have

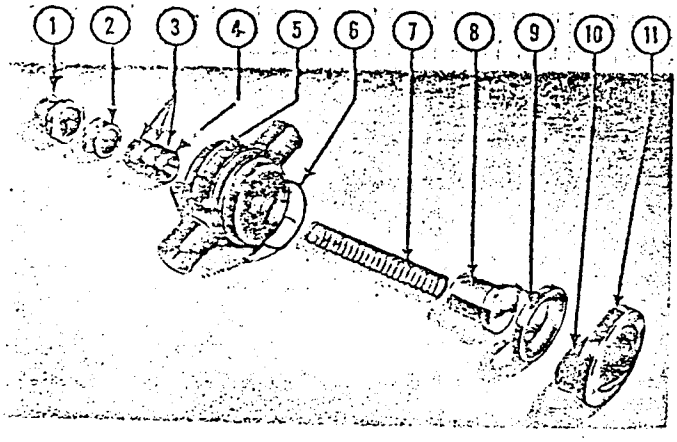

33,116

Figure 3-99. Vacuum System Relief Valve

Key to Figure 3-99

Item	*Nomenclature*
1.	Cap
2.	Lock Nut
3.	Washers
4.	Adjustment Screw (slotted for screwdriver)
5.	Case
6.	Washer
7.	Spring
8.	Valve
9.	Valve Seat
10.	Screen
11.	Retaining Ring

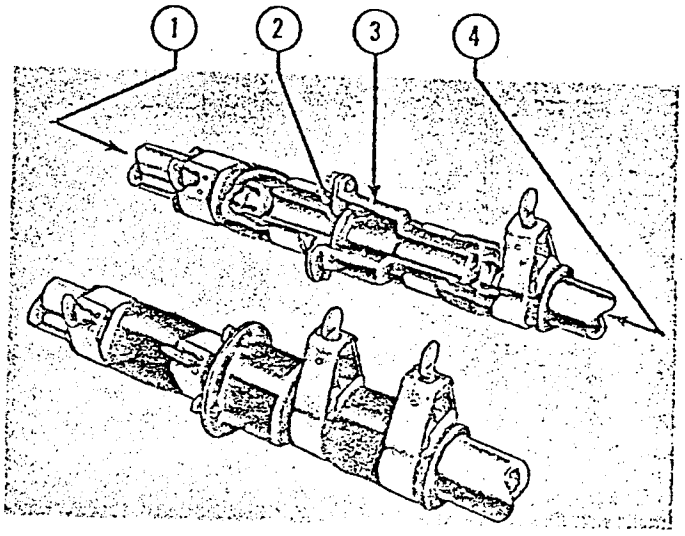

33,374

Figure 3-100. Surface De-Icing System Check Valve

Key to Figure 3-100

Item	*Nomenclature*
1.	Inlet Port
2.	Disc and Spring
3.	Barrel
4.	Outlet Port

a displacement of 14.4 cubic inches per revolution. They will operate in either direction and torque is transmitted from the engine drive gear to the pump rotor by means of a coupling. The bore of the sleeve is divided into four sections by the rotor and the blades. The axis of the rotor is off center with that of the sleeve, and the sections are of unequal volume. The smaller sections are located at the point where the rotor is closest to the sleeve. As the rotor turns, the four sections pass the point where the volume of each is at a minimum. From this point, the volume of each section increases during one-half rotation, thus creating suction and drawing in air from the nearest port. During the second half rotation, the section volume decreases and the air is forced out through a sec-

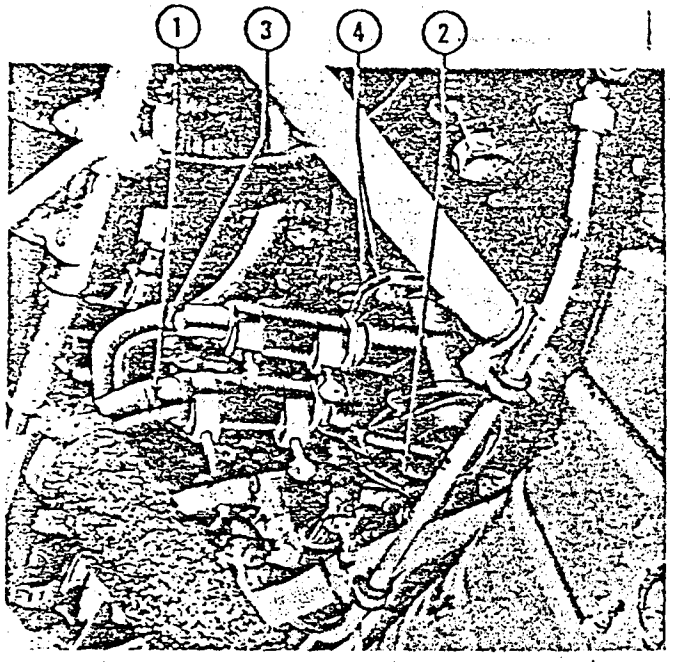

33,375

Figure 3-101. Vacuum Pump Installed

Key to Figure 3-101

Item	Nomenclature
1.	Vacuum Pipe
2.	Cover Plate
3.	Pressure Pipe
4.	Mounting Pad and Gasket

ond port. The rapid succession of intakes produces a steady suction.

3-398. Both pumps run continuously with the engines and are directly lubricated by the engine oil. Lubricating oil flows through an aligned supply opening located in the rear accessory drive section of the engine and then flows through the opening in the pump mounting flange into the interior of the pump. The pump incorporates four of these supply openings, any one of which can be used to supply lubrication when the pump is installed. One hole is aligned with the opening in the accessory section and the other three are blocked off by the installed gasket.

3-399. REMOVAL OF DE-ICING SYSTEM VACUUM PUMP.

a. Disconnect the pipes from the pump.

b. Remove the four attaching bolts and the pump.

c. Plug the pipes.

3-400. DISASSEMBLY OF DE-ICING SYSTEM VACUUM PUMP.

a. Remove the attaching screws and the cover from the pump.

Key to Figure 3-102

Item	Nomenclature
1.	Inlet Port
2.	Outlet Port
3.	Bearing Lubrication Channel
4.	Cover Attaching Holes
5.	Cover Hole Pin
6.	Shaft
7.	Sleeve
8.	Blades
9.	Rotor

b. Remove the pump blades, sleeve, and rotor.

3-401. MAINTENANCE OF DE-ICING SYSTEM VACUUM PUMP.

a. Dress scuffed blades on a smooth, flat oilstone, but maintain the original radius on the edges.

b. Dress the rotor slots with an oilstone.

c. Replace damaged oil-metering collar or metering pin.

d. If the coupling shows signs of wear or has failed, remove the snap ring, extract the coupling, and replace it.

e. Replace worn or damaged gasket.

f. Replace badly damaged or worn pump.

3-402. TEST BEFORE INSTALLATION OF DE-ICING VACUUM PUMP.

a. Check all ports for clearance.

b. Remove the plugs from the ports before turning the coupling by hand.

c. Rotate the coupling by hand to insure freedom of operation.

d. To insure proper lubrication, place a paper over the discharge port and note that some oil collects on the paper.

3-403. ASSEMBLY OF DE-ICING SYSTEM VACUUM PUMP.

a. Install the pump blades, sleeve, and rotor.

b. Install the cover on the pump with the attaching screws.

3-404. INSTALLATION OF DE-ICING SYSTEM VACUUM PUMP.

a. Align one of the oilholes in the base of the pump with the oilhole in the engine mounting pad and flange gasket for the pump.

b. Position the pump and fasten with the four bolts.

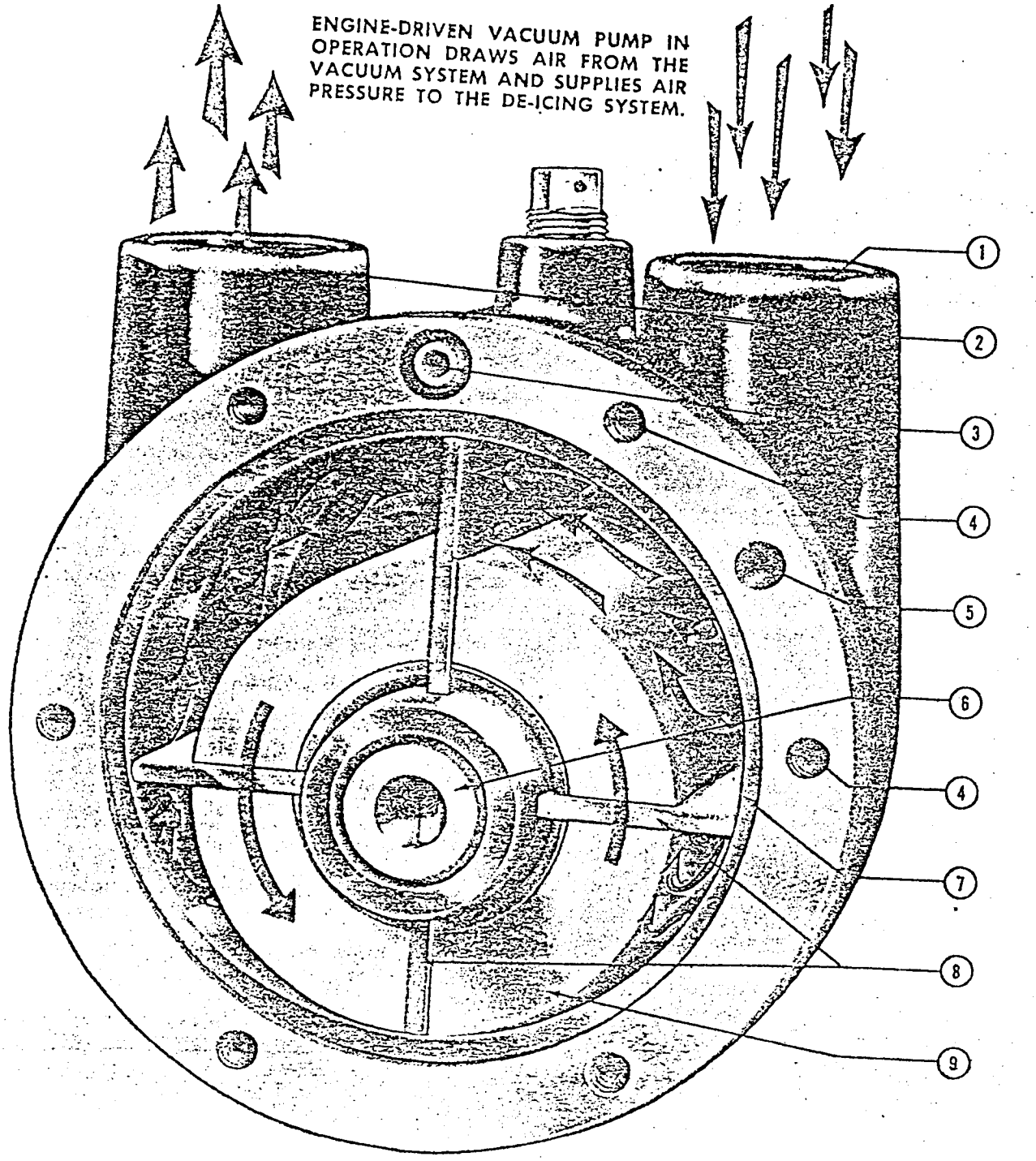

OFF CENTER ROTOR REVOLVING ABOUT FIXED CENTER FORCES BLADES TO SHUFFLE IN AND OUT OF ROTOR AGAINST SIDE OF CHAMBER. CHAMBER AREAS INCREASE ON ONE SIDE CREATING A VACUUM AND DECREASE ON OTHER SIDE CREATING PRESSURE.

COLOR CODE: VACUUM AIR PRESSURE

Figure 3-102. Vacuum Pump (Cutaway View)

33,376

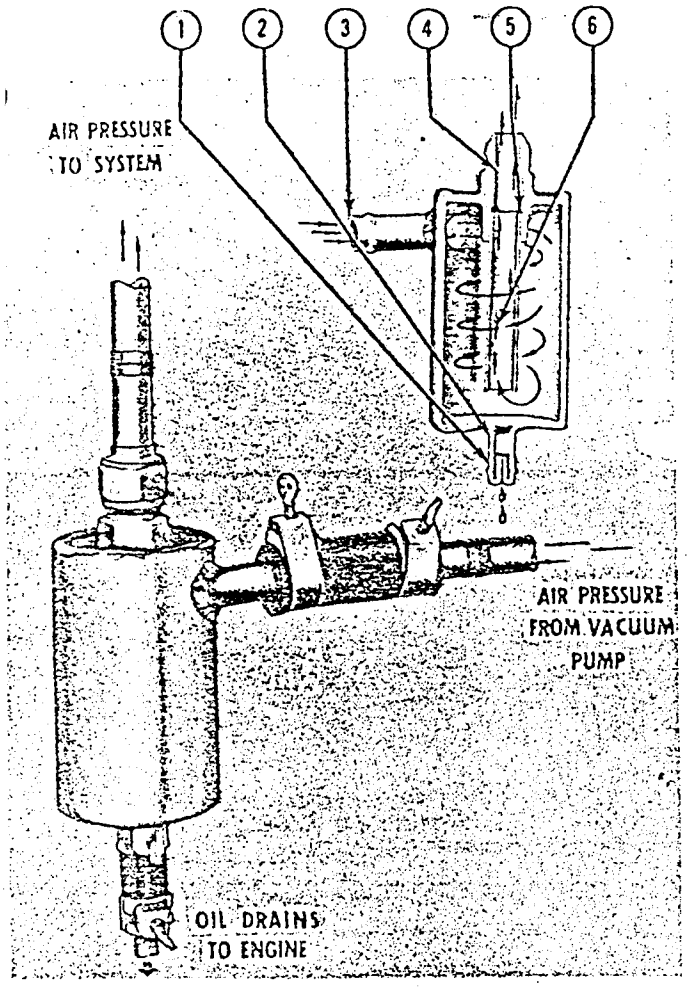

33,377

Figure 3-103. De-Icing System Oil Separator

Key to Figure 3-103	
Item	*Nomenclature*
1.	Restrictor
2.	Oil Drain
3.	Inlet Port
4.	Outlet Port
5.	Separator Bowl
6.	Standpipe

c. Remove the plugs from the pipes and connect the pipes to the pump.

Note

The oilhole of the pump must be aligned to insure lubrication.

3-405. TEST AFTER INSTALLATION OF DE-ICING SYSTEM VACUUM PUMP.

a. Operate the system with the engines running.

b. Check operation of the pump for temperature rise, oil flow, and seal leakage.

3-406. DE-ICING SYSTEM OIL SEPARATOR.
(See figure 3-103.)

3-407. An oil separator, mounted on a bracket on the top of the engine mount, receives the air from the pressure port of the vacuum pump through the separator inlet port. Centrifugal force whirls the air, saturated with a small amount of engine oil used in lubricating the pump, inside the separator bowl. The excess oil (and some condensation) collects on the interior wall of the bowl and drains through a restrictor located at the bottom of the rear accessory drive section (case) of the engine. The air then continues on through a standpipe which extends vertically from the outlet port.

3-408. REMOVAL OF DE-ICING SYSTEM OIL SEPARATOR.

a. Disconnect the inlet and outlet pipes.

b. Disconnect the pipe located between the bottom drain and engine rear section.

c. Disconnect the support bracket.

d. Remove the oil separator.

3-409. MAINTENANCE OF DE-ICING SYSTEM OIL SEPARATOR.

a. Remove the oil separator unit if clogged, dirty, or operating sluggishly.

b. Clean with solvent.

c. Blow out with compressed air.

d. Replace damaged separator.

3-410. TEST BEFORE INSTALLATION OF DE-ICING SYSTEM OIL SEPARATOR. Plug the outlet port and apply 20-psi pressure to the inlet port. Place the separator in water and test for leakage. Bubbles will appear if the unit leaks.

3-411. INSTALLATION OF DE-ICING SYSTEM OIL SEPARATOR.

a. Connect the oil separator to the bracket in a vertical position.

b. Connect the pipe between the bottom drain and the engine rear section.

c. Connect the inlet and outlet pipes.

3-412. DE-ICING SYSTEM CHECK VALVES (PRESSURE PIPE).
(See figures 3-100 and 3-104.)

3-413. Check valves are installed in the pressure pipe aft of each oil separator and in the distributor valve pipe.

Note

These check valves are identical to the vacuum pipe check valves.

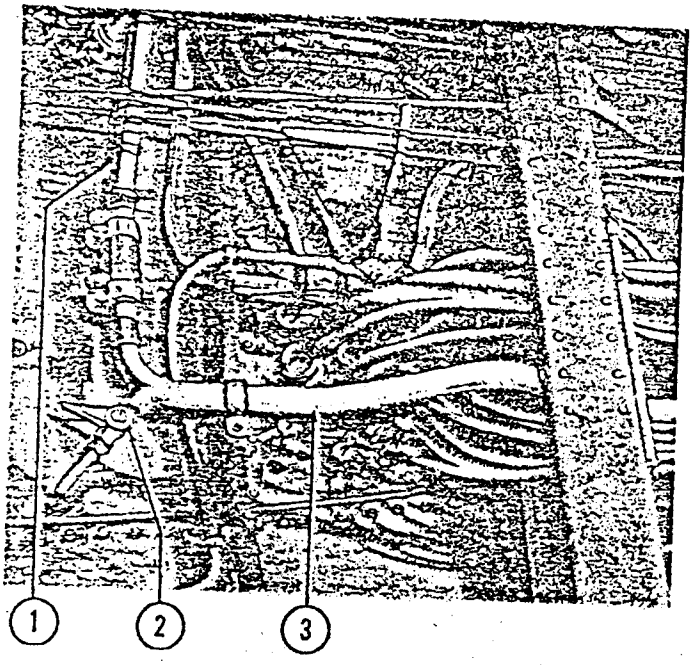

33,378

Figure 3-104. Auxiliary Check Valve Installed

Key to Figure 3-104

Item	*Nomenclature*
1.	Pipe Distributor Valve to Check Valve
2.	Plug Valve and Union
3.	Pipe From Check Valve

Air flows into the inlet port of the valve to unseat the spring-loaded disc, and continues through the outlet port. The valve closes to permit system operation whenever the discharge pressure is less than the back pressure.

3-414. REMOVAL OF DE-ICING SYSTEM CHECK VALVE (PRESSURE PIPE).

a. Loosen the connecting hose clamps and slide them along the pipes.

b. Remove the check valve and hoses.

c. Plug both pipes.

3-415. MAINTENANCE OR REPLACEMENT OF DE-ICING SYSTEM CHECK VALVE (PRESSURE PIPE). Replace any malfunctioning check valve.

3-416. INSTALLATION OF DE-ICING SYSTEM CHECK VALVE (PRESSURE PIPE).

a. Remove the plug from the pipes.

b. Install the check valve and hoses.

c. Position and secure the hose clamps.

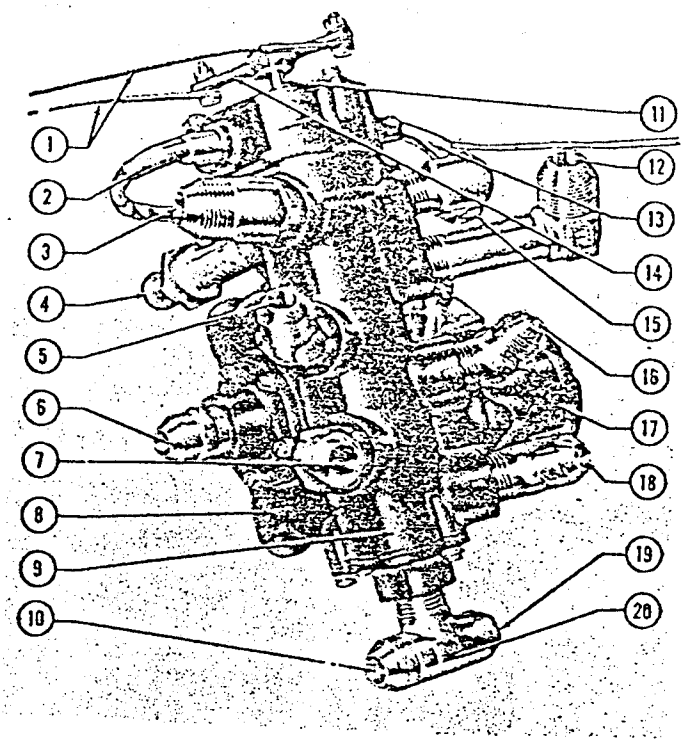

33,379

Figure 3-105. Surface De-Icing System Distributor Valve

Key to Figure 3-105

Item	*Nomenclature*
1.	Control Cables
2.	Electrical Conduit
3.	Port to Filter (oil separator)
4.	Port to Main Pressure Pipe
5.	Port 4 to Upper and Lower Tubes (inboard boots)
6.	ON Exhaust Port
7.	Port 2 to Upper and Lower Tubes (outboard boots)
8.	Valve Housing Extension
9.	Core Housing
10.	Tee Connection to ON Exhaust Port Pipe
11.	Arm (shaft and core connector)
12.	Port 5 to Empennage Boots
13.	Electrical Conduit
14.	Control Arm and Control Unit Housing
15.	OFF Outlet (overboard) Port
16.	Port 3 to Center Tubes (inboard boots)
17.	Motor Housing
18.	Port 1 to Center Tubes (outboard boots)
19.	Channel Drain and ON Exhaust Outlet
20.	Tee

3-417. DE-ICING SYSTEM DISTRIBUTOR VALVE.

(See figures 3-105 and 3-106.)

3-418. The distributor valve is bolted to the forward wing spar in the center wing section. The distributor

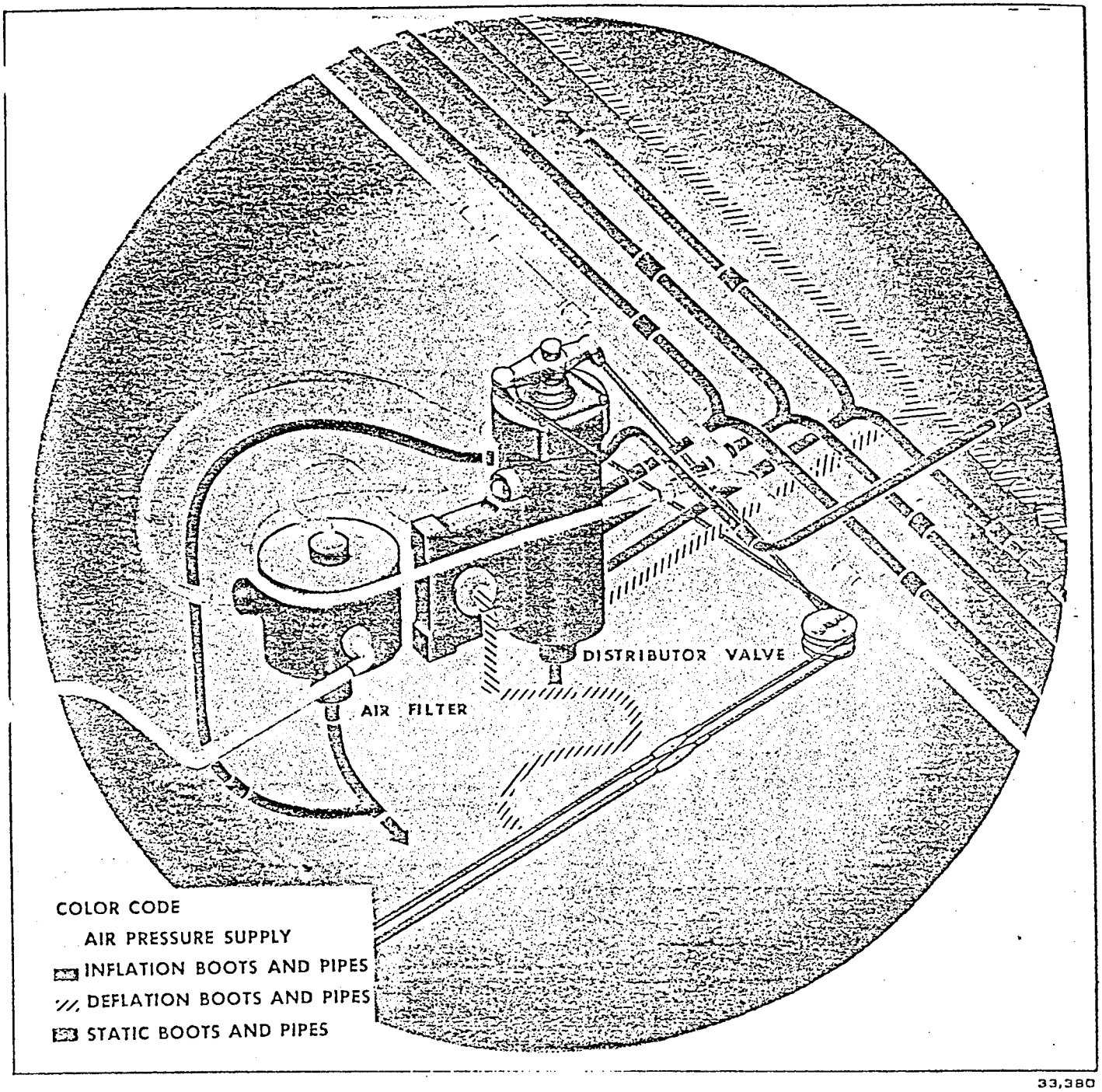

33,380

Figure 3-106. Distributor Valve and System Detail

valve unit consists of a control arm which rotates a shaft and cylindrical core within the valve housing. When the control handle, located behind the co-pilot's seat, is in the ON position, the arm at the top of the control unit rotates to start the motor. As the arm turns, it rotates and aligns the five holes in the core with the five de-icing outlet ports in the core housing. During the rotation sequence, the core opens the air filter port and closes the OFF overboard port. The air from the pressure pipe enters the control unit at the upper front side. It then flows through the outlet port to the filter, flows through the filter, and again enters the distributor valve through the gear section of the motor. From here the air then flows to the rotor distributor, making one complete cycle every 40 seconds.

3-419. The distributor discharges air through each opening for a period of 8 seconds, thus completing the sequence cycle in 40 seconds. The air flows through the openings in the following sequence:

No. 1 Port (lower left of the core housing), to the center tubes of the right and left outboard de-icing boots.

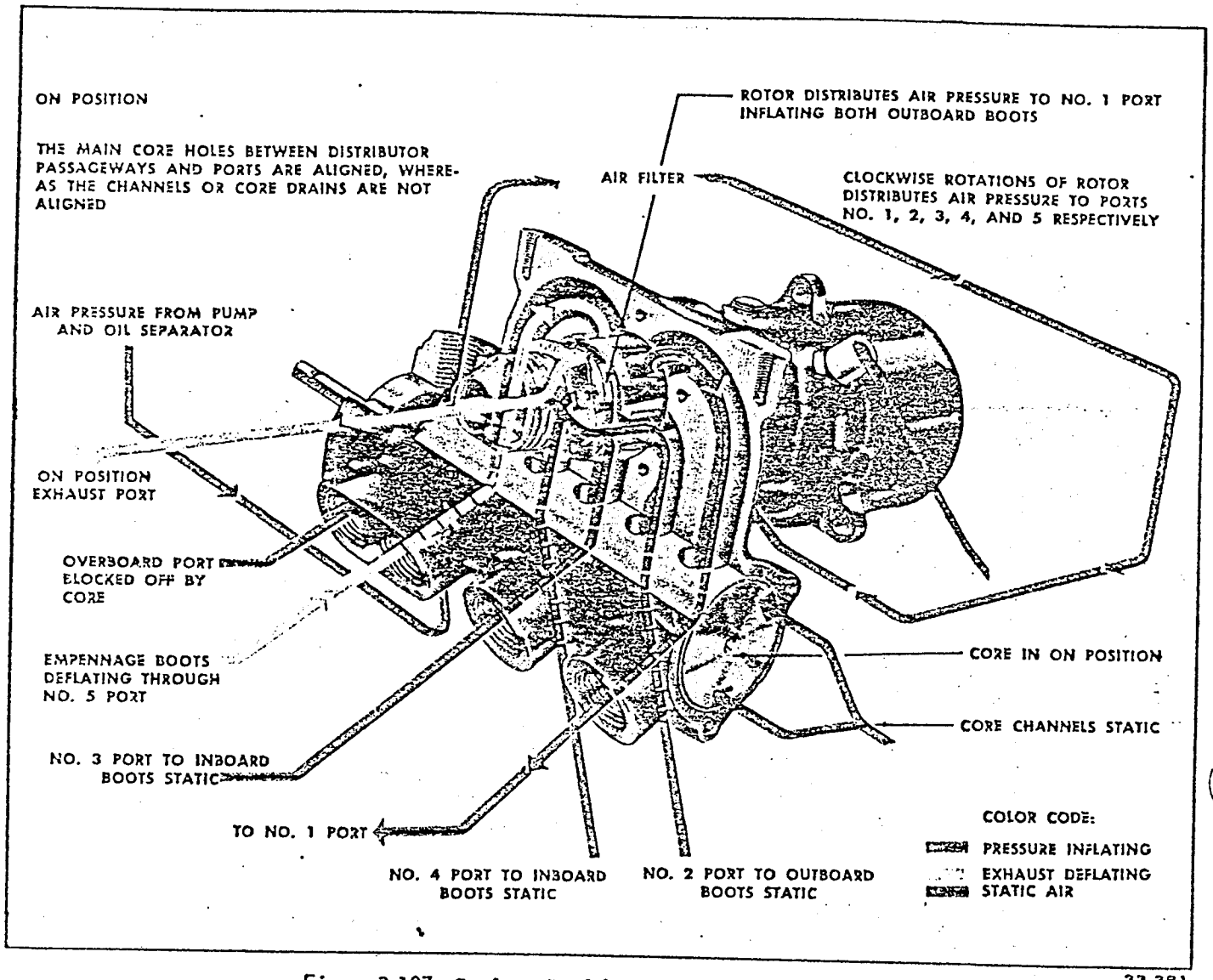

Figure 3-107. Surface De-Icing Control Unit (ON Flow)

33,381

No. 2 Port (lower left of the core housing), to the upper and lower tubes of the right and left outboard de-icing boots.

No. 3 Port (center right of the core housing), to the center tubes of the right and left inboard de-icing boots.

No. 4 Port (center left of the core housing), to the upper and lower tubes of the right and left inboard de-icing boots.

No. 5 Port (upper right of the core housing), to all tubes of the three stabilizer de-icing boots. The tubes in each stabilizer inflate simultaneously as one part of the de-icing cycle.

After the boots have been inflated, the air supply is shut off by rotation of the distributor valve, thus deflating the boots. The exhaust air flows from the boots through the supply pipe to the distributor valve assembly, bypassing the port to the filter. The air is then discharged from the exhaust port through a pipe connected to the air filter drainpipe at a wye fitting located below the filter. From here the air is expelled overboard through a pipe and fitting at the bottom of the wing. When the control handle is placed in the OFF position, the core in the distributor valve stops in the OFF position *(see figures 3-107 through 3-109)*.

3-420. REMOVAL OF DE-ICING SYSTEM DISTRIBUTOR VALVE.

a. Disconnect the pipes to the distributor valve.

b. Disconnect the electrical connector wire from the motor.

c. Disconnect the control cables from the arm.

d. Remove the two bolts securing the valve to the wing spar and remove the valve.

3-421. INSTALLATION OF DE-ICING SYSTEM DISTRIBUTOR VALVE.

a. Position the valve to the wing spar and secure with the bolts.

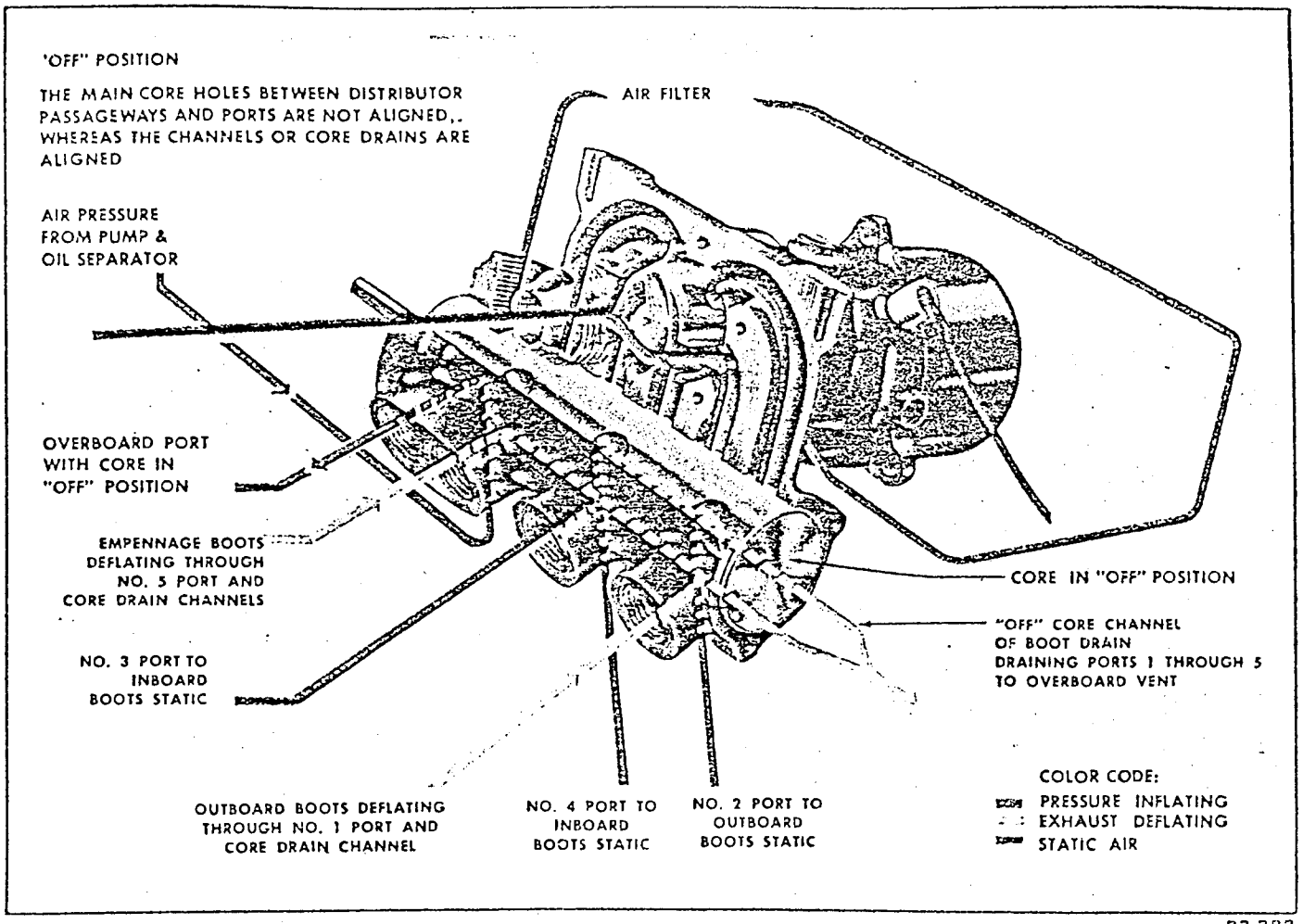

Figure 3-108. Surface De-Icing Control Unit (OFF Flow)

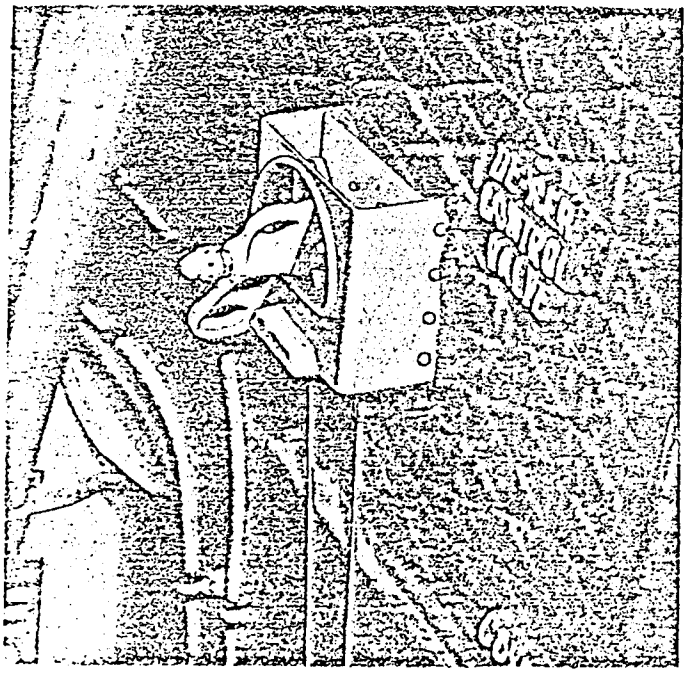

33,383

Figure 3-109. De-Icing Control Handle Installed (C-47 Airplanes)

b. Connect the electrical connection to the motor.

c. Connect the pipes to the distributor valve.

d. Connect the control cables to the arm.

3-422. TEST AFTER INSTALLATION OF DE-ICING SYSTEM DISTRIBUTOR VALVE. With the engines running, turn the de-icing system on and check to see that the de-icing boots inflate and deflate in the proper sequence. Test the distributor valve for leakage.

3-423. DE-ICING SYSTEM AIR FILTER. *(See figure 3-110.)*

3-424. The air filter, which also serves as an oil separator, is bolted to the wing spar and is located forward of the distributor valve. Air from the distributor valve enters the inlet port of the filter. Centrifugal force whirls the air and some oil inside the filter bowl, separating the oil from the air and depositing the oil on the interior wall of the bowl. The air flows through a screen in the bottom of the filter cartridge, which is constructed of copper and wool filament. The air flows through the cartridge and the top screen, and then through the outlet port. The oil drains from the

bowl through a port *(see figure 3-110)* in the bottom of the bowl, continues through the pressure relief valve, and flows out through the valve housing port.

3-425. REMOVAL OF DE-ICING SYSTEM AIR FILTER.

a. Disconnect the pipes to the air filter.

b. Remove the two bolts attaching the filter to the wing spar and remove the air filter.

3-426. DISASSEMBLY OF DE-ICING SYSTEM AIR FILTER.

a. Remove the attaching screws and the cover.

b. Remove the filter cartridge.

c. Remove the screens.

d. Unscrew the regulator screw and remove the pressure relief valve filter.

3-427. MAINTENANCE OF DE-ICING SYSTEM AIR FILTER.

a. Clean all parts with approved solvent and compressed air.

b. Replace any defective parts.

3-428. ASSEMBLY OF DE-ICING SYSTEM AIR FILTER.

a. Position the filter screens, cartridge, and pressure relief valve.

b. Install the regulator screw and secure the pressure relief valve.

c. Install the filter cover and fasten with the screws.

3-429 INSTALLATION OF DE-ICING SYSTEM AIR FILTER.

a. Position the filter on the wing spar and secure with the bolts.

b. Connect the pipes to the air filter.

c. Adjust the pressure relief valve by rotating the regulator screw until the de-icing gage indicates 8 psi with the engine running.

3-430. DE-ICING SYSTEM PRESSURE GAGE. *(See figure 3-97.)*

3-431. The de-icing system pressure gage is mounted on the co-pilot's main instrument panel. The pressure pipe from the gage connects to the de-icing system air filter.

Note

The gage will indicate 8 psi only at the peak pressure of each inflation cycle.

3-432. REMOVAL OF DE-ICING SYSTEM PRESSURE GAGE.

a. Disconnect the pipe from the gage.

b. Remove the mounting screws securing the gage.

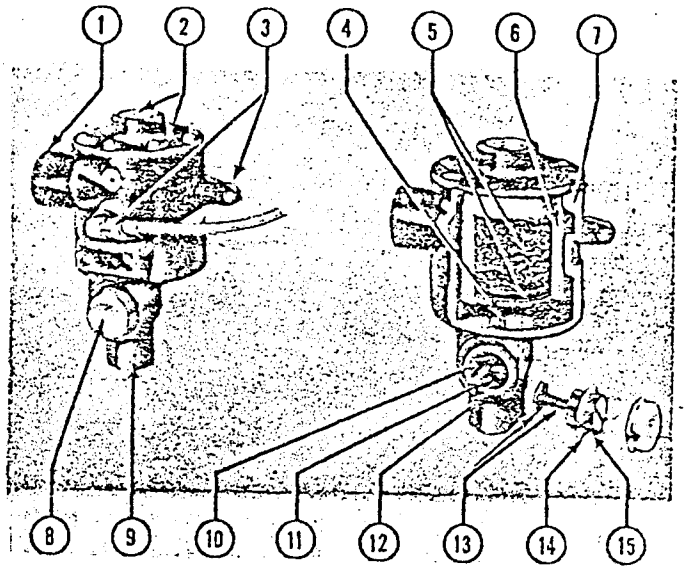

33,384

Figure 3-110. Air Filter (Oil Separator) and Filter (Cutaway View)

Key to Figure 3-110

Item	*Nomenclature*
1.	Inlet Port
2.	Outlet Port and Separator Cover Plate
3.	Mounting Flange and Gage Line Connection
4.	Bowl Drain and Vent
5.	Screen and Filament
6.	Cartridge
7.	Bowl
8.	Cap
9.	Vent Throat
10.	Vent (valve seat)
11.	Vent (in valve housing)
12.	Valve Housing
13.	Disc, Shaft, and Spring
14.	Lock Nut
15.	Regulator Screw

c. Remove the gage from the instrument panel.

3-433. INSTALLATION OF DE-ICING SYSTEM PRESSURE GAGE.

a. Position the pressure gage in the instrument panel and fasten with the mounting screws.

b. Connect the pressure pipe to the gage.

3-434. TEST AFTER INSTALLATION OF DE-ICING SYSTEM PRESSURE GAGE. Check the pressure gage operation during the de-icing boot test described in paragraph 3-452.

3-435. DE-ICING SYSTEM CONTROLS. *(See figures 3-97 and 3-111.)*

3-436. A control handle on a bracket assembly, bolted to the bulkhead aft of the co-pilot's seat, turns the de-

icing control unit ON or OFF. The handle rotates an arm connected at either end to a 1/16-inch cable. The ON or outboard cables are identified with a green band, and the OFF cab! . .th two green bands. The cables are routed to the de-icing control unit through three sets of pulleys. The first set of pulleys is bracketed to the lower section of the bulkhead below the handle, the second set to a brace below the floor in the center of the fuselage, and the third set is attached to the wing spar, at the left of the distributor valve. Turnbuckles are located forward of the spar to adjust the tension for each cable.

3-437. REMOVAL OF DE-ICING SYSTEM CONTROL.

a. Remove the bracket and attaching screws to remove the control handle.

b. Disconnect the turnbuckles and detach the pulleys.

c. Disconnect the turnbuckles and detach the cable from each arm end on the control unit. Pull out the cables.

d. Remove the screws from the cover of the control unit.

e. Remove the arm from the shaft and lift off the cover.

3-438. REPAIR OF DE-ICING SYSTEM CONTROLS.

a. Replace the frayed or worn cables.

b. Replace the worn, crooked, or faulty pulleys.

c. Replace faulty turnbuckles.

3-439. ADJUSTMENTS OF DE-ICING SYSTEM CONTROLS. Adjust the cable tension by loosening or tightening the turnbuckles. Check the control handle for proper operation. See Cable Tension Chart, figure 11-3.

3-440. INSTALLATION OF DE-ICING SYSTEM CONTROL.

a. Install the arm on the shaft.

b. Position the cover and tighten the screws on the control unit.

c. Route the cables and connect each cable to the control valve arm end.

d. Install the pulleys on the brackets and connect the turnbuckles.

e. Install the handle on the shaft leading to the arm.

f. Position the bracket and connect the cable ends to the arms.

g. Install the bracket attaching screws.

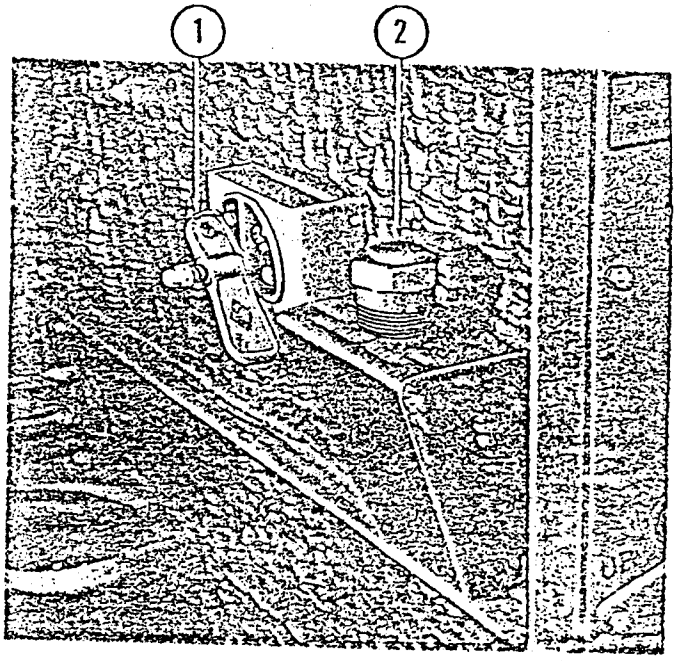

Figure 3-111. De-Icing Control Handle Installed (C-117 Airplanes)

Key to Figure 3-111

Item	*Nomenclature*
1.	Surface De-Icer
2.	De-Icer Tank Auxiliary Filler

3-441. DE-ICING BOOTS.
(See figure 3-112.)

3-442. The de-icing boots are made of soft resilient rubber and consist of tubes extending lengthwise within rubber strips. The boots are installed along the leading edges of the wings and empennage. The wing boots comprise two outboard and inboard sections, each with three parallel inflatable tubes.

Note

Ice collecting on the leading edges of the wings between the nacelles is partially removed by the propeller blast.

The empennage boots comprise two horizontal stabilizer sections and a vertical stabilizer section, each with two parallel inflatable tubes. The center tube of each wing boot is inflated first, followed by the simultaneous inflation of the upper and lower tubes. All of the stabilizer tubes are inflated at the same time. Each boot contains small breather holes located on the top surface to permit smooth deflation. As the boot deflates, the holes permit some of the air to escape. The escaping air makes it easier for the boot to resume its natural, deflated condition, and to complete the

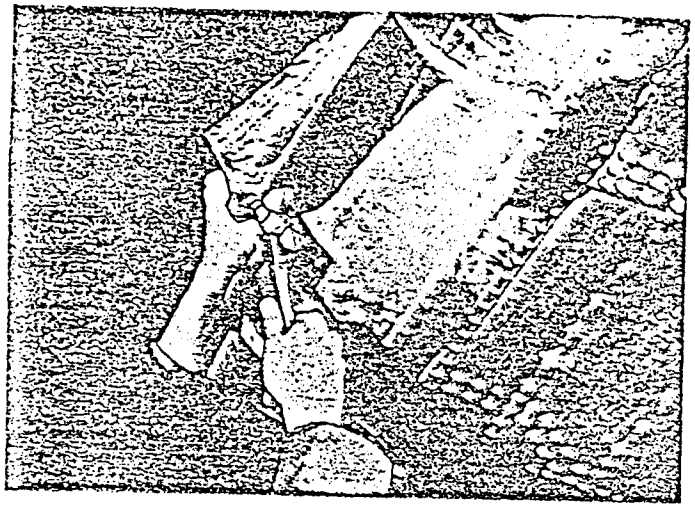

Disconnect the hoses.

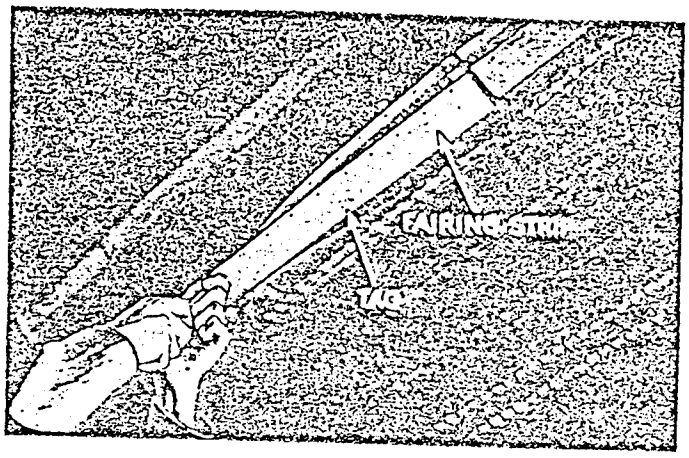

Tag each fairing strip when removed.

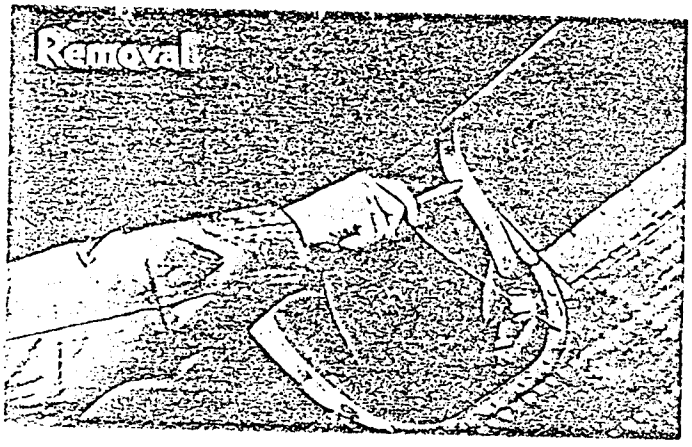

Remove all screws, end clamps, and fairings securing the boots.

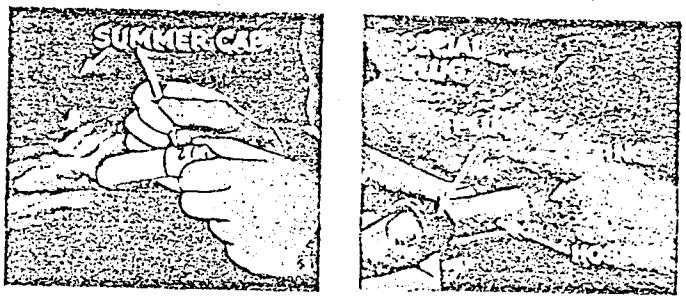

Tag the hose ends. Insert special plugs into the hose and push flush with the wing fitting. Snap the summer caps in place.

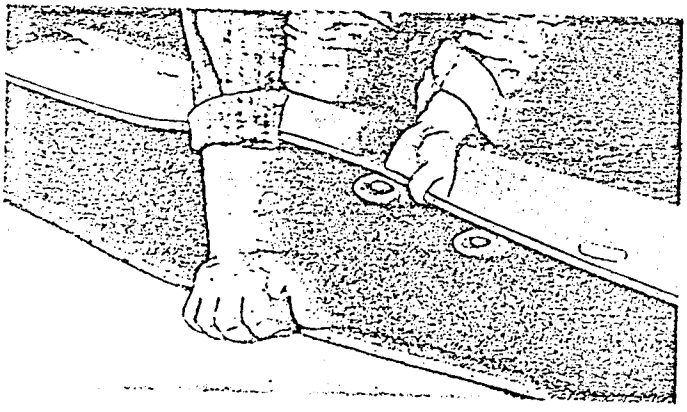

Remove boots carefully. Inspect and repair before storing. Stretching the rubber aids in locating the small holes.

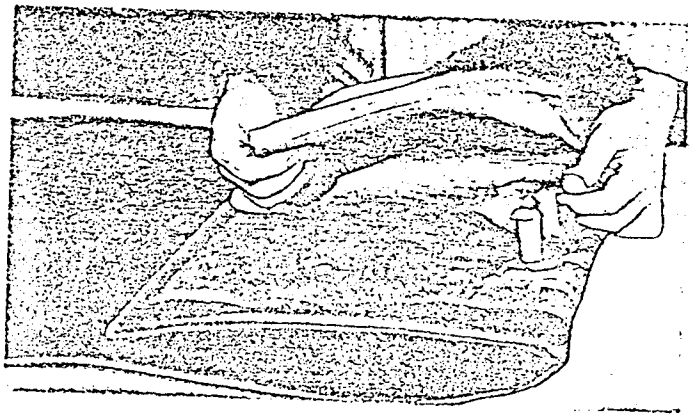

Layout the de-icing boot with the outer side (black side) up. Tuck the flaps under. Tape the ends of the metal beads and air connections.

Figure 3-112. Removal, Repair, and Installation of De-Icing Boots (Sheet 1 of 5)

33,385

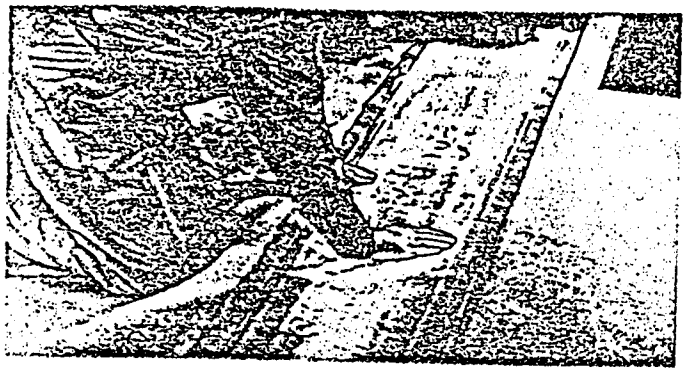

Rub talc on the mating wing surface of the boot.

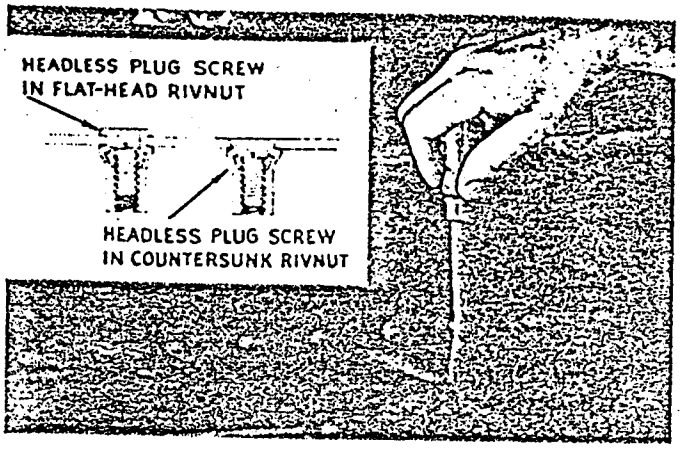

Insert plug screws into the rivnuts if boots are to be stored. Replace damaged or worn rivnuts.

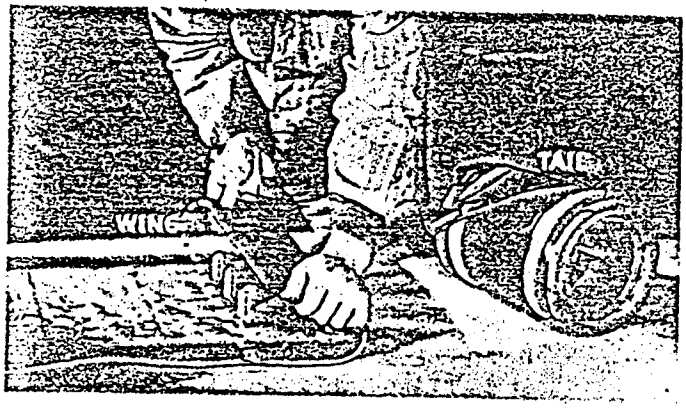

Clean and dry the boots thoroughly, and roll into a 4- to 6-inch diameter roll. Roll wing boots from the connection end. Roll the empennage boots from the tip end.

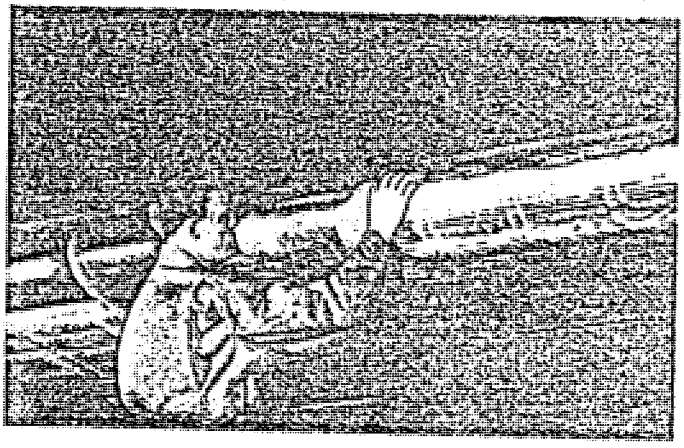

Remove the tapes from the wing surface, and wash off the talc with an approved cleaning agent.

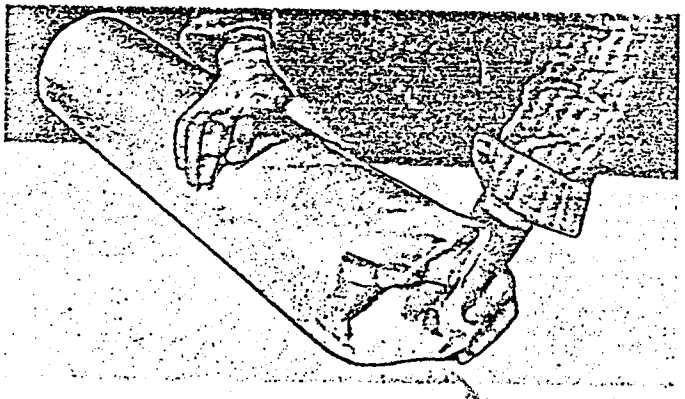

Wrap the boots in heavy paper. Turn in the edges to keep out light. Do not wrinkle the boot. Store in a cool, dark, and dry location.

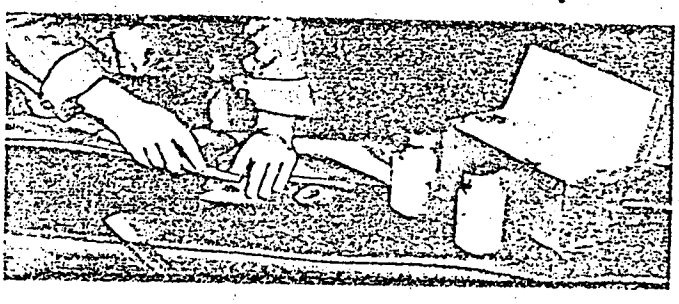

Use the de-icing cold patch repair kit in the following manner —

a. Wash the damaged area with a mild soap and water.
b. Protect the boot with a buffing shield during the patching operation.
c. Roughen the patch area with a buffer stick
d. Clean the patch area with benzol.

33,387

Figure 3-112. Removal, Repair, and Installation of De-Icing Boots (Sheet 2 of 5)

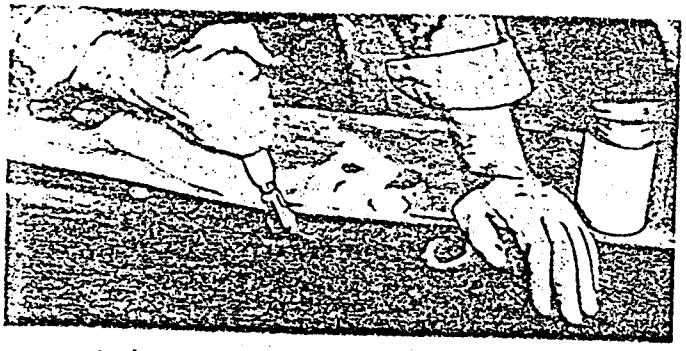

a. Apply cement.
b. When cement becomes tacky, remove fabric from patch and apply to boot.
c. Press or roll patch.
d. Allow 15 minutes for the patch to set.
e. Clean patch area with benzol.
f. Brush on conductive cement to restore surface area.

To prepare the boots for resurfacing, first scrub its outer surface with cheesecloth moistened with butyl acetate, or isopropyl acetate.

a. Mask the boot label.
b. Spray a smooth coat of conductive cement on the boot.
c. Spray a second coat over the worn areas. (Frequent applications may be necessary.

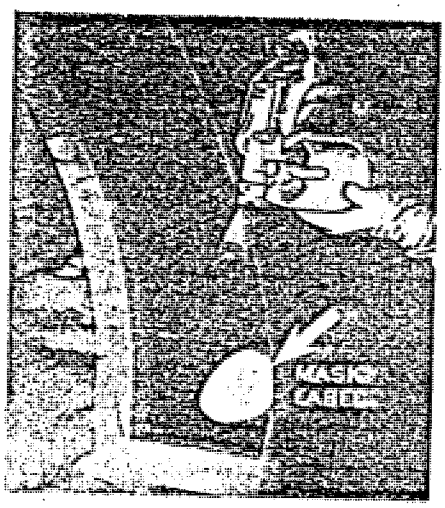

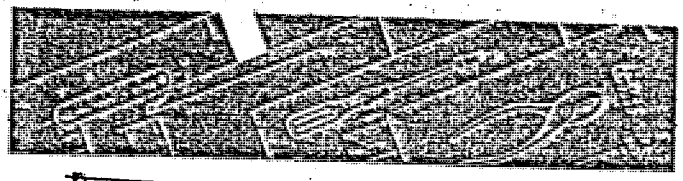

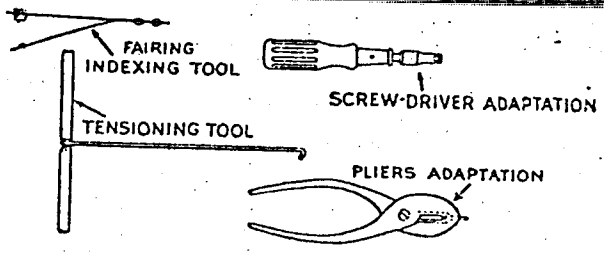

Special tools used in installing boots.

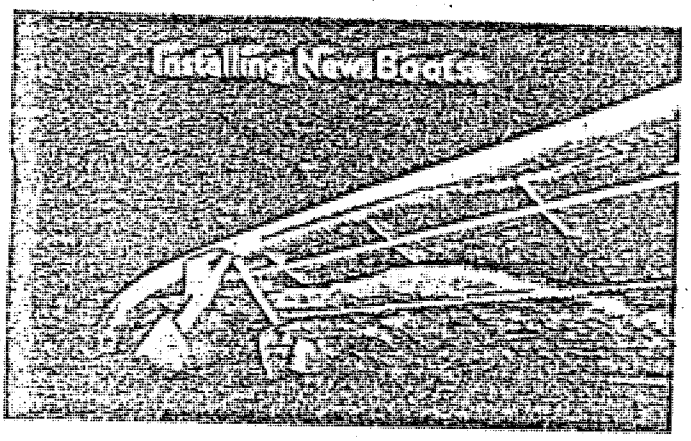

To prepare wing for new boots, apply adhesive tape over all plating laps and rivet heads in the boot area. In a salt water area, apply salt water primer on the wing and empennage plating before installing boots.

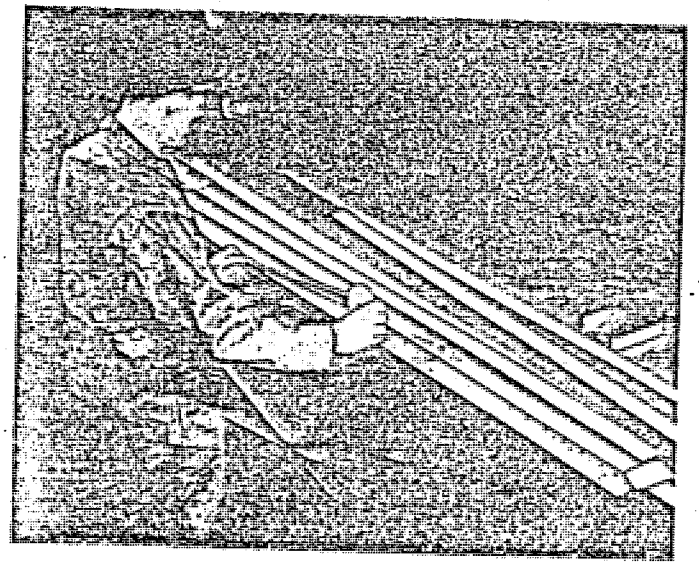

Tape the undersurfaces of the fairing strips flush with the leading edge to prevent the strip marring the plating of the airplane wing.

Figure 3-112. Removal, Repair, and Installation of De-Icing Boots (Sheet 3 of 5)

33,388

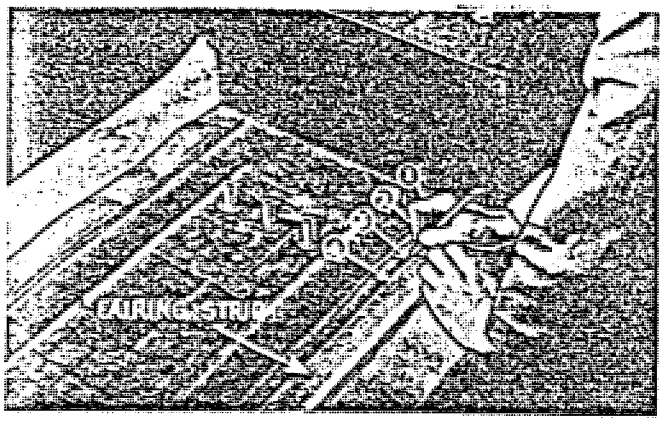

a. Lay the proper fairing strip on the edge of the boot.
b. Line up the No. 4 hole of the fairing strip with the No. 4 mark on the boot.
c. Layout of the holes are now marked directly from the fairing strip.

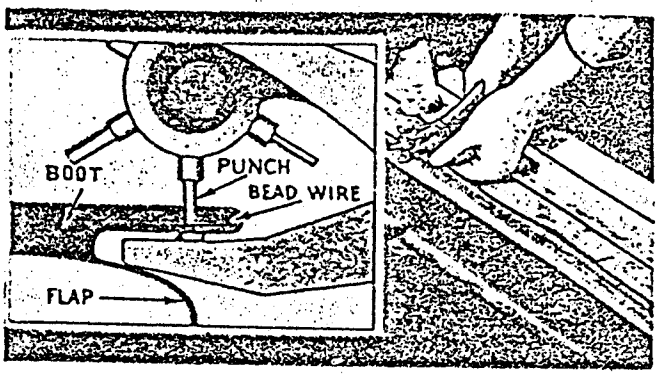

a. Punch holes in the fabric-reinforced rubber, so that the metal bead will bear against the screws when installed.
b. Punch boot around curve tip after the straight part is located on the wing area.

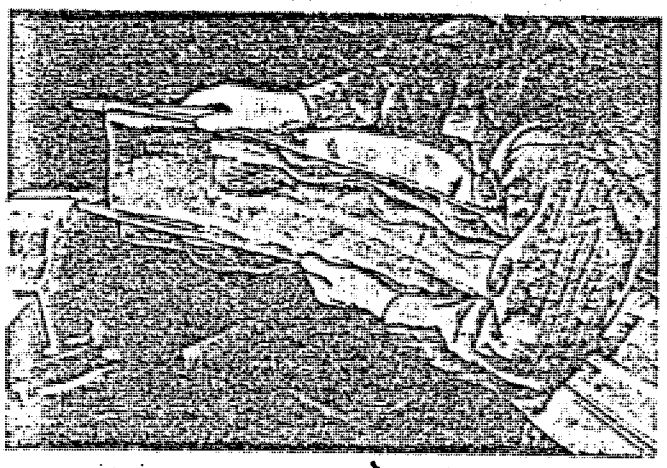

Slide the rubber boot back onto the beads, to curve the boot to conform to the wing-tip curve.

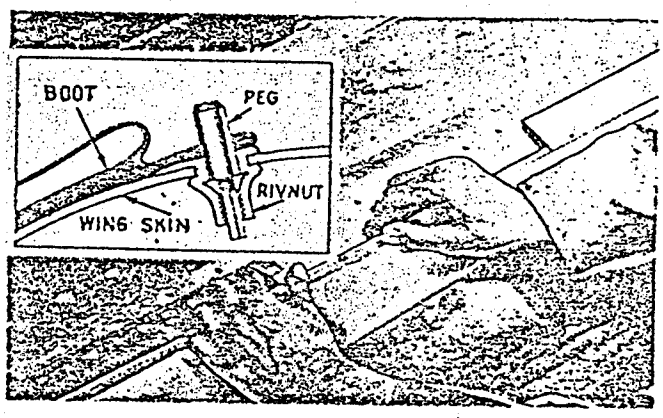

a. Place position pegs in the rivnut holes on top of the wing surface.
b. Hang the boot and fairing strips on the position pegs.
c. Check the boots for proper position at the air connections.

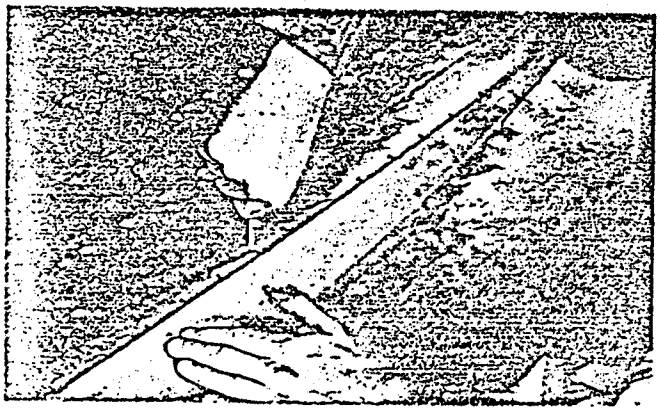

a. Attach the fairing strips and the boots with special screws.
b. Remove the pegs as the screws are installed.
c. Do not tighten the screws.

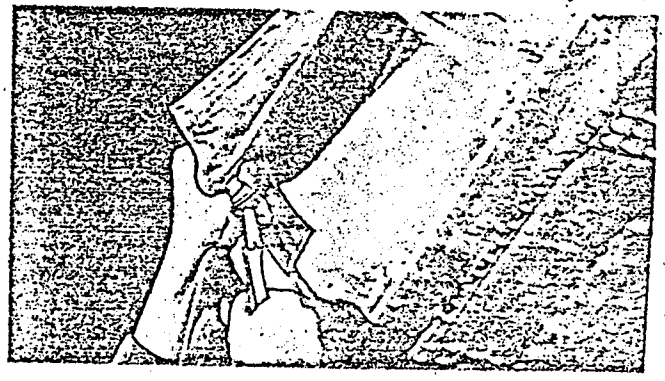

a. Remove the summer caps.
b. Pull out hoses and connect securely to the boots with wire.
c. Adjust the connections in the wing and empennage areas.

Figure 3-112. Removal, Repair, and Installation of De-Icing Boots (Sheet 4 of 5)

53,389

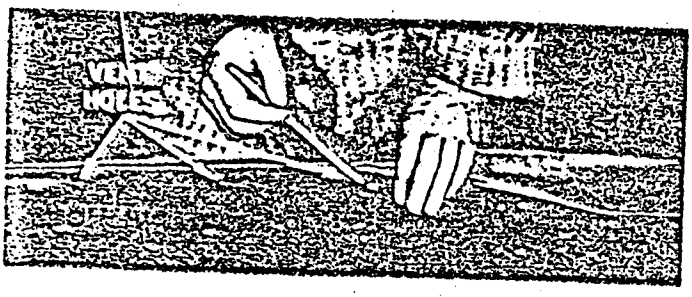

The bottom holes are marked the same as the top holes. Because the vent holes are located on the top side of the boots, the right and left wing boots can be easily identified.

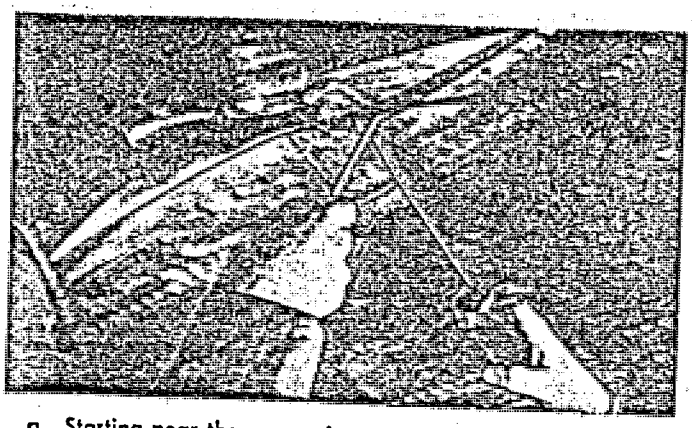

a. Starting near the connections, stretch the boot around the leading edge with a tensioning hook.

b. Peg it into place with a position peg holder and a tool for pegging.

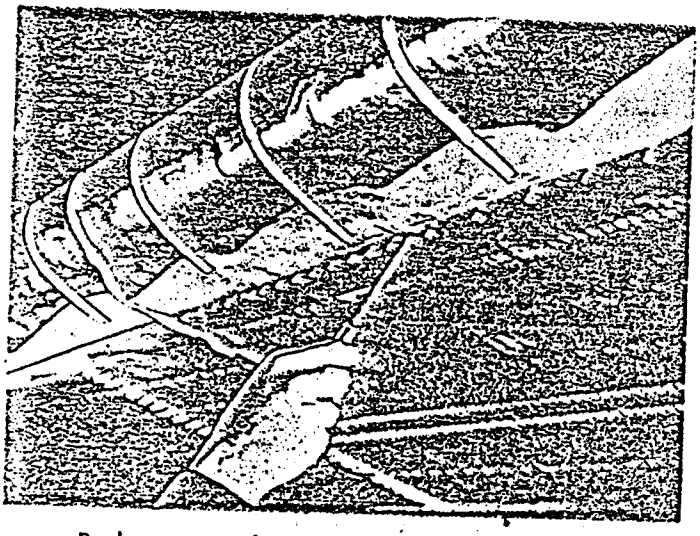

Replace every other peg with a screw.

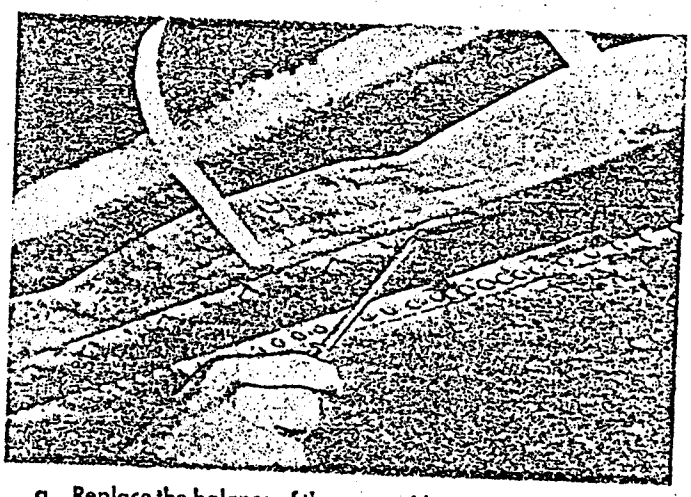

a. Replace the balance of the pegs with screws, and tighten securely.

b. Tighten all of the top attachment screws.

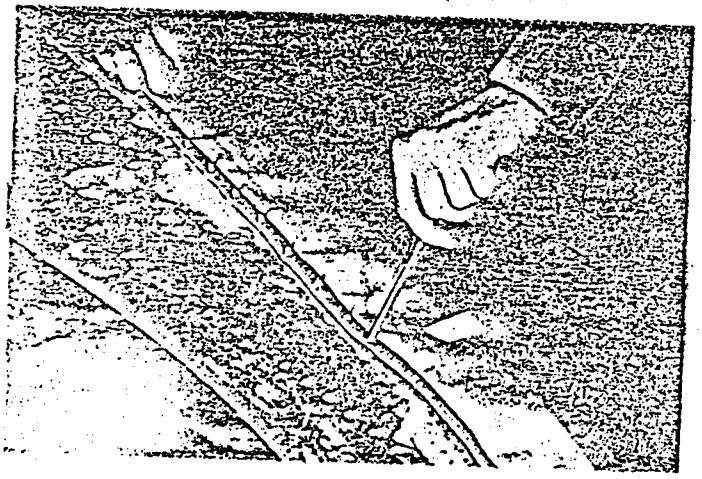

a. Begin at the tip curve.

b. Hold the boot up to the line of the rivnuts.

c. Mark the first few rivnut positions on the boot bead.

d. Punch holes and peg the de-icing boot.

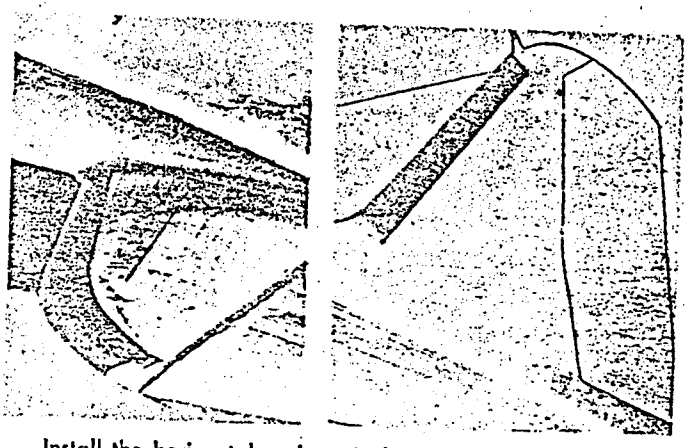

Install the horizontal and vertical stabilizer boots as outlined for the wing boots.

Figure 3-112. Removal, Repair, and Installation of De-Icing Boots (Sheet 5 of 5)

33,390

deflation cycle. The boots contain thin metal strip beads at the edges for better adherence to the leading edge. Boot clamps at the edges, between the fairings and around the landing lights, provide a better fit and exclude the outside air. Each boot has extruded metal tubes for the pipe connections. The rubber of the boot is stretched to facilitate deflation and to insure an even airfoil. Each tube is under inflation for 8 seconds, and a complete inflation cycle requires 40 seconds. The peak of the inflation cycle is maintained for 6 seconds.

3-443. PRECAUTIONS IN MAINTENANCE OF DE-ICING BOOTS.

a. Do not allow gasoline service hoses or hoisting cables to rub over the de-icing boots.

b. Make certain that padding for the ladders and platforms is provided so that contact with the leading edge of the wings and stabilizers will not tear the boots.

c. Remove any engine oil from the surface of the de-icing boots after the airplane lands, using a clean soft cloth and a neutral soap-and-water solution, or any of the following cleaning agents: nonleaded gasoline; butyl acetate; isopropyl acetate; or benzol. Use all cleaning agents sparingly and wipe off immediately.

Note

Petroleum Products are injurious to rubber and therefore should be used sparingly.

3-444. REMOVAL OF DE-ICING BOOTS.

Note

On some C-47 airplanes, the flaps or aft edges of the boots are cemented. Soften the cement with an approved solvent before removing the flap. Store the boots after removal, as sunlight and heat will cause deterioration.

a. Disconnect and plug the air tube fittings.

b. Remove the attaching screws from the fairing strips.

c. Remove the fairing strips and tag them for correct location.

d. Remove the boot clamps.

3-445. STORING DE-ICING BOOTS. (See T.O. 15E-1-1, Section III.)

a. Tag the air supply hoses and secure them inside the airplane wing area.

b. Install the caps covering the de-icing tube openings.

Note

Do not use a liquid mixture of talc on the de-icing boots.

c. Wrap the boots into a roll 4 to 6 inches in diameter. The wing de-icing boots must be rolled from the connection end and the empennage boots must be rolled from the tip end.

d. Wrap the boots in heavy paper and close in the ends, being careful not to wrinkle the boots, and then store in a cool, dark, and dry area.

3-446. PRECAUTIONS IN MAINTENANCE OF LEADING EDGES AFTER DE-ICING BOOT REMOVAL. The following precautions must be followed after the de-icing boots have been removed and stored:

a. Remove all tape from the leading edges.

b. Wash all the talc powder from the surfaces.

c. Plug all the rivnuts, using special headless screws to protect the rivnut threads and to prevent dust from entering the wings and stabilizers.

3-447. CLEANING DE-ICING BOOTS. (See T.O. 15E-1-1, Section III.)

3-448. MAINTENANCE REPAIR OF DE-ICING BOOTS. (See T.O. 15E-1-1, Section III.) For damage in the fabric reinforcement at right angle to the center line of the de-icing boots, or for any emergency repairs to breaks over 1 inch long, repair as outlined in the preceding steps of above referenced T.O. Reinforce the patch used for this type of repair with the rubberized fabric installed on the back of the de-icing boot.

Note

A de-icing boot repair kit is stowed in the baggage compartment of the airplane for minor repairs in the field.

3-449. RESURFACING DE-ICING BOOTS. (See T.O. 15E-1-1, Section III.)

3-450. REPLACEMENT OF DE-ICING BOOTS.

a. Replace any de-icing boots beyond repair.

b. Replace de-icing boots that do not meet the following minimum requirements listed in table 3-26.

TABLE 3-26
MINIMUM REQUIREMENTS - DEICING BOOTS

Part Number	*Inboard*	*Outboard*
11-364-6-1	12¼ inches	5½ inches
11-364-7-1	8½ inches	6 inches
11-364-8-1	3 15/16 inches	4 inches
11-364-9-1	4 3/16 inches	4 inches

Note

Inboard measurements are taken from the center of the air inlet tube to the inboard end of the de-icing boot. Outboard measurements are taken from the end of the inflating tube to the outboard end of the de-icing boot.

3-451. INSTALLATION OF DE-ICING BOOTS. All de-icing boots can be installed without removing any assembly from the airplane. Use the following procedure for installing all de-icing boots for the top and bottom wing and empennage areas of the airplane:

Note

Use a soft pencil for all marking operations and *do not* under any circumstances use anything that will scratch the surface.

a. Remove the plug screws and inspect the rivnuts for condition and security.

b. Remove paint from leading edge; if unpainted, thoroughly clean the surfaces of all oil and grease film. Spray paint leading edge with a coating of primer to prevent corrosion of skin beneath de-icer shoes.

c. Apply adhesive tape over all rivnuts and seams protruding above the plate surface to prevent wear on the under surface of the rubber.

d. Tape the undersurfaces of all fairing strips flush with the trailing edge with ¼-inch tape to prevent the strip from marring the plating.

e. Paint around the three air tube openings with Fairprene No. 4 cement or equivalent, and let the area dry until it becomes tacky.

f. Paint the rubber pad with Fairprene No. 4 cement, or equivalent, and install the pad over the openings.

g. Paint the entire leading edge to be covered by the de-icing boots, with a solution of talc and non-leaded gasoline or equivalent for boot lubrication.

WARNING

Use an approved thinner rather than gasoline if the installation is to be made inside a hangar.

h. After inspecting the pipes to see that they are clean, plug the pipes leading from the boots to the distributor valve.

i. Position the fairing strip along the edge of the de-icing boot.

j. Line up fabric-reinforced rubber with the holes in the fairing strip, and punch the holes so that the metal bead bears against the screws when installed.

Note

Step j applies only to new de-icing boots. Boots formerly installed will have the holes punched.

k. Slide the rubber back on the bead about 3 inches, in order to curve the tip of the boot to conform roughly to the wing tip curve.

l. Rub talc on the back of the boot.

m. Insert positioning pins in the rivnut holes on top of the wing and place the de-icing boots and fairings over these pins. The boot must be properly fitted at the air connection to prevent binding.

n. Remove every other pin installed and replace with special attaching screws. Do not tighten the screws in the rivnuts for this operation.

o. Remove the protective caps from the openings and pull out the stowed supply hoses. Connect the hoses from the de-icing boot fittings to the pipes leading to the distributor valve. Check the hose terminals to determine that they are securely wired to prevent leakage.

p. Insert positioning pins on the bottom of wing section.

q. Stretch the boot, using a tensioning hook; starting at the air hose connections, proceed around to the leading edge and over the pins at the bottom of the wing.

r. Install fairing strips over the bottom pins.

s. Replace every other pin with a special attaching screw and tighten it.

t. Tighten all screws at the top boot attachment and then insert the remaining screws at the bottom.

u. Apply Fairprene No. 4 cement or equivalent at locations of the landing light, attach angle, wing tip, fairing cap, between the fairing strips, and along the fairing edges wherever the fit is uneven.

Note

On some C-47 airplanes, the de-icing boots incorporate flaps aft of the fairings which will require cementing to the wing surface.

v. Carefully fit the boot to the curve of the wing tip, and keep all wrinkles and folds at right angles to the leading edge.

w. Place the curved fairing strip over the position-

ing pins. Replace the pins with screws, and tighten the screws progressively toward the wing tip.

Note

Carefully roll out the wrinkles in the de-icing boot as the fairings are being secured.

3-452. TEST AFTER INSTALLATION OF DE-ICING BOOTS. Make a ground check of the de-icing system to test for proper installation and operation of the boots as outlined in the following steps:

Note

Before starting the de-icing system check, test the airplane pressure gage with a test gage of known accuracy.

a. With the airplane engines stopped, connect a source of air pressure of not more than 10 psi to the pressure supply pipe and turn the de-icing system control handle to the ON position.

b. The pressure shown on the gage must rise to 8 psi at the peak of the inflation cycle.

c. Turn the adjusting screw on the air filter counterclockwise to relieve pressure.

d. Check the pulsation of the boots for the proper inflation cycle. Inflation and deflation of the de-icing boots must be rapid and complete to insure the proper removal of ice.

e. A complete and normal cycle of boot operation must not last longer than 40 seconds. If the check indicates that the system is operating improperly, correct the difficulties by checking the operation of the control valve in relation to the supply pipe connections to the boots.

3-453. DE-ICING SYSTEM AUXILIARY VALVE. *(See figure 3-104.)*

3-454. A plug valve located in the aft inboard side of the right nacelle is provided for testing. One port of the valve is screwed into a union in the pressure pipe and the other port is free for attachment of an auxiliary pressure pipe to test the system without using either airplane vacuum pump. The manually operated valve can also be used to drain the system. A lockwire secures the handle to prevent leakage.

3-455. DE-ICING SYSTEM DRAIN COCK.

3-456. The drain cock is a heavy metal plug with a T-shaped handle and is located a few feet aft of the lavatory door in the bend of the de-icing pipe. The valve is located below the airplane floor at the lowest point in the system piping. Remove the plug to drain the collected condensation in the pipes. The drain cock is accessible below an access cover located in the bottom of the fuselage *(see figure 1-5)*.

3-457. REMOVAL OF DE-ICING SYSTEM DRAIN COCK.

a. Disconnect the bonding wires from the handle.

b. Unscrew the plug from the tee.

3-458. INSTALLATION OF DE-ICING SYSTEM DRAIN COCK.

a. Screw the plug to the tee.

b. Connect the bonding wires to the handle.

3-459. DE-ICING SYSTEM PIPING.

3-460. The pressure pipes are constructed of aluminum with hoses located at vital connection points. The pressure pipes are identified by a light green and blue banding to distinguish them from the vacuum pipes, which have a white and light green banding.

3-461. REMOVAL OF DE-ICING SYSTEM PIPING.

a. Loosen the compression nuts at the connection.

b. Remove the piping from the hose connection.

3-462. INSTALLATION OF DE-ICING SYSTEM PIPING.

a. Insert the piping into the hose connection.

b. Tighten the compression nuts.

3-463. INSTRUCTIONS FOR DE-ICING SYSTEM WINTERIZATION. Specific instructions for windshield de-icing and defrosting and for wing and empennage de-icing regarding winterization are described in Section II.

3-464. ANTI-ICING SYSTEM.

3-465. **GENERAL DESCRIPTION.** *(See figures 3-113 and 3-114.)* Ice-preventive measures are known as anti-icing whenever heat or alcohol is used to prevent ice formation on the surface areas of the airplane. Two sources of heat are used, either to melt the ice or prevent its formation. One source of heat is hot air which is generated by exhaust gases and which is routed to defrost the windshields and to maintain carburetor temperature above a fixed minimum. The other heat source is the airplane electrical current that heats the unit to prevent ice from forming on the pitot tubes. Alcohol used in the system has a considerably lower freezing point than water and is an ideal anti-icing agent. Whenever alcohol is mixed with the vapor in the air, the result requires a lower temperature to freeze the mixture.

3-466. **TROUBLE SHOOTING OF ANTI-ICING SYSTEM.** Trouble shooting of the anti-icing system, including the propeller and the carburetor and windshield subsystems, is accomplished as outlined in table 3-27.

TABLE 3-27
TROUBLE SHOOTING - ANTI-ICING SYSTEM

TROUBLE	PROBABLE CAUSE	REMEDY
a. Pump motor does not operate.	Fuse blown.	Replace fuse.
	Low input voltage.	Recharge battery.
	Loose or corroded battery terminals.	Tighten and clean terminals.
	Wiring not properly connected.	Connect wiring correctly.
	Loose or high resistance connections.	Clean and tighten connections.
	Brushes binding in box. Worn brushes.	Replace brushes.
	Dirty commutator.	Remove dirt and grease from commutator with solvent moistened cloth. Smooth with No. 000 sandpaper. CAUTION Do not use coarse sandpaper or emery cloth.
	Shorted control switch.	Insert jumpers across switch terminals. Replace switch if motor operates.
	Mechanical failure in pump.	Replace pump.
b. Insufficient or no flow of fluid to propeller blades.	Faulty control at pilot's control handle.	Replace control.
	Supply tank empty.	Fill tank.
	Nozzle at end of slinger ring supply pipe dirty.	Clean nozzle.
	Loose and/or broken pipes.	Replace pipes and tighten connections.
	Dirt in pump.	Remove and clean pump.
	Clogged filter.	Remove cap from filter and clean filter.
c. Insufficient or no fluid flow to carburetor or windshield.	Motor not running.	See item a.
	Leaking connections, broken or clogged pipes between tank and pump, or between pump and shutoff valve.	Replace broken pipes. Clean out clogged pipes with compressed air.
	Supply tank empty.	Fill tank.
	Pump operates but shutoff valve fails to open.	Replace shutoff valve or connection.
	Pump jammed or damaged. Jamming caused by dirt in supply pipe between filter and pump.	Remove pump. Clean out dirt.

TABLE 3-27 (Continued)

TROUBLE	PROBABLE CAUSE	REMEDY
c. (Continued)	Clogged filter between tank and pump.	Open cap at bottom of filter and clean.
	Gasket between pump housing and pump assembly damaged.	Replace damaged gasket.
	Internal leak in pump assembly.	Replace pump.
	System control valve faulty.	Replace valve.

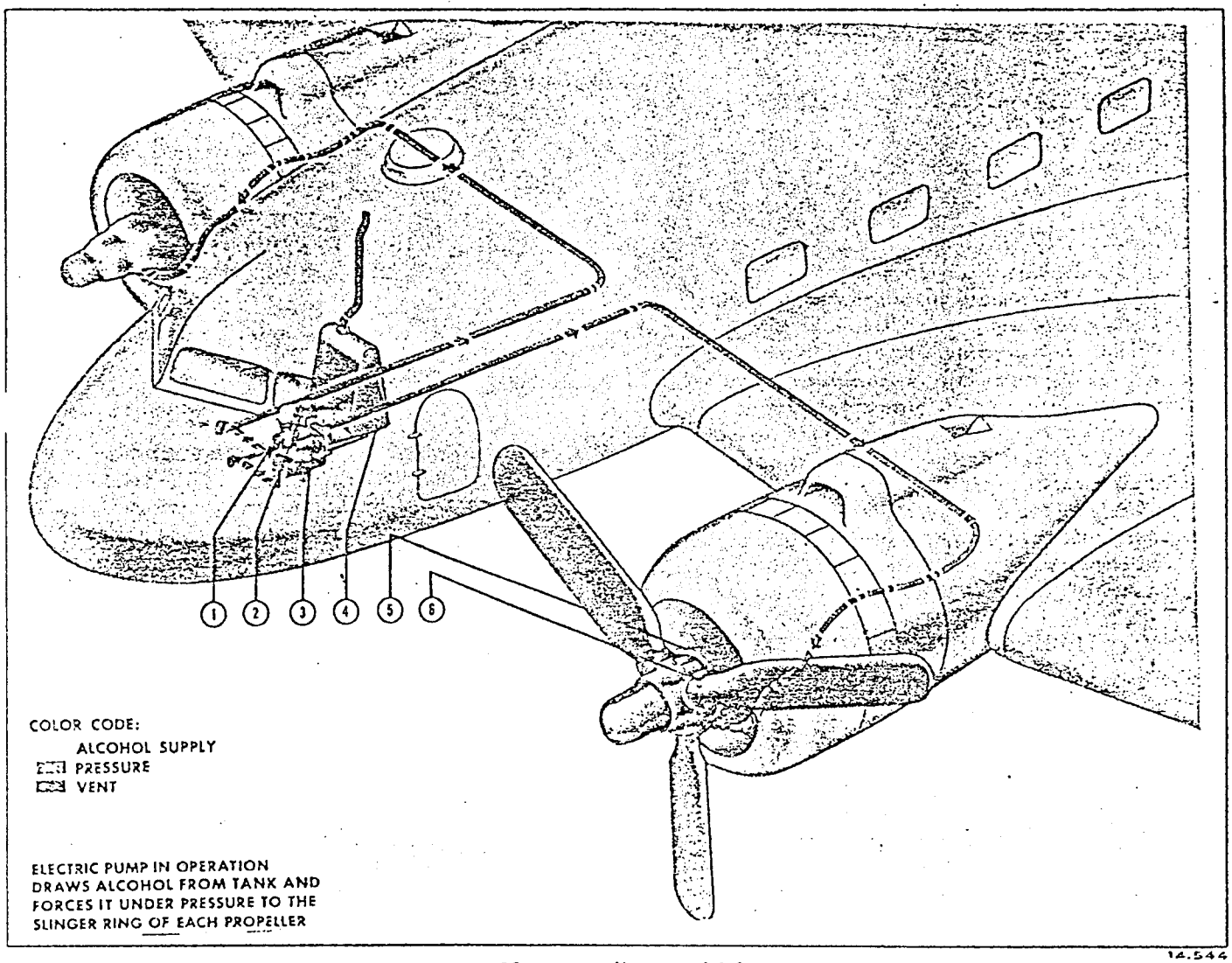

14.544

Figure 3-113. Propeller Anti-Icing System

Key to Figure 3-113

Item	*Nomenclature*	*Item*	*Nomenclature*
1.	Filter (Strainer)	4.	Tank
2.	Shutoff Valve	5.	Slinger Ring
3.	Pump or Alternate Pump	6.	Bracket Assembly

3-467. **REMOVAL AND INSTALLATION OF COMPONENTS OF ANTI-ICING SYSTEM.** Removal and installation of the components of the anti-icing system are accomplished as outlined in the following paragraphs. Disassembly, maintenance, assembly, and test procedures are outlined where applicable.

3-468. **WINDSHIELD ANTI-ICING SYSTEM.** *(See figure 3-114.)* The windshield anti-icing system supplies alcohol to the outside of the windshields, to prevent ice from forming, and to maintain clear visibility. This system contains a tank, pump, and filter which are also common to the windshield and carburetor anti-icing system. Alcohol is pumped from the supply tank, through the pump and filter, and to the forward and side windshields.

3-469. WINDSHIELD ANTI-ICING SYSTEM SUPPLY TANK.
(See figure 3-114.)

3-470. On airplanes, an aluminum-alloy tank with a capacity of 11.5 US gallons is installed on the right side of the center wing section. Metal straps are bolted around the triangular-shaped tank to hold it securely on the brackets. A vent and a filler neck are located on the brackets. A vent and a filler neck are located on the top right side of the tank and extend through the fillet. The drain and the manually operated valves are located on the bottom of the tank and control the entrance of the alcohol from the tank into the supply pipes, which connect to the windshield and carburetor anti-icing system.

3-471. REMOVAL OF WINDSHIELD ANTI-ICING SYSTEM SUPPLY TANK.

a. Disconnect the vent and fluid flow pipes from the tank.

b. Remove the nuts from the fasteners attached to the ends of the straps.

c. Remove the straps and the tank from the support brackets.

3-472. TEST BEFORE INSTALLATION OF WINDSHIELD ANTI-ICING SYSTEM SUPPLY TANK. Test the supply tank by applying air pressure of 3 to 5 psi. Apply a soap solution to the surface for a bubble test.

Note

Drain any sludge deposit from the tank before installation.

3-473. INSTALLATION OF WINDSHIELD ANTI-ICING SYSTEM SUPPLY TANK.

a. Place the tank in the bracket supports and connect the straps.

b. Tighten nuts on the fasteners at the strap ends.

c. Connect and secure the vent and fluid flow pipes.

3-474. WINDSHIELD ANTI-ICING SYSTEM SHUTOFF VALVE.
(See figure 3-114.)

3-475. A manually operated shutoff valve, located in the supply pipe aft of the alcohol tank, is provided to turn the fluid supply ON or OFF.

3-476. REMOVAL OF WINDSHIELD ANTI-ICING SYSTEM SHUTOFF VALVE.

a. Disconnect the pipes from the shutoff valve.

b. Remove the valve from the mounting elbow.

3-477. INSTALLATION OF WINDSHIELD ANTI-ICING SYSTEM SHUTOFF VALVE.

a. Connect the valve to the mounting elbow.

b. Connect the pipe to the inlet port.

3-478. **WINDSHIELD AND CARBURETOR ANTI-ICING SYSTEM.** The windshield and carburetor anti-icing system supplies alcohol to the exterior of the windshields to prevent formation of ice and to maintain clear visibility. The system also supplies alcohol to the carburetor air duct through spray nozzles to prevent ice formation. The components of the combined system consist of a supply tank, a pump, filter, and the necessary pipes and controls.

3-479. WINDSHIELD AND CARBURETOR ANTI-ICING SYSTEM FLUID FILTER.
(See figure 3-115.)

3-480. A filter located in the piping between the supply tank and the inlet port of the pump, is mounted on a bracket to the fuselage. A metal cap incorporates the inlet and outlet ports, a duralumin bowl which collects sediment, and a filter spring and filter element. The fluid is drawn through the inlet port into a passageway in the cap, and then into the bowl surrounding the filter element. The pump suction draws the fluid through the filter element and the outlet port. The filter element prevents foreign particles from entering the pump.

3-481. REMOVAL OF WINDSHIELD AND CARBURETOR ANTI-ICING SYSTEM FLUID FILTER.

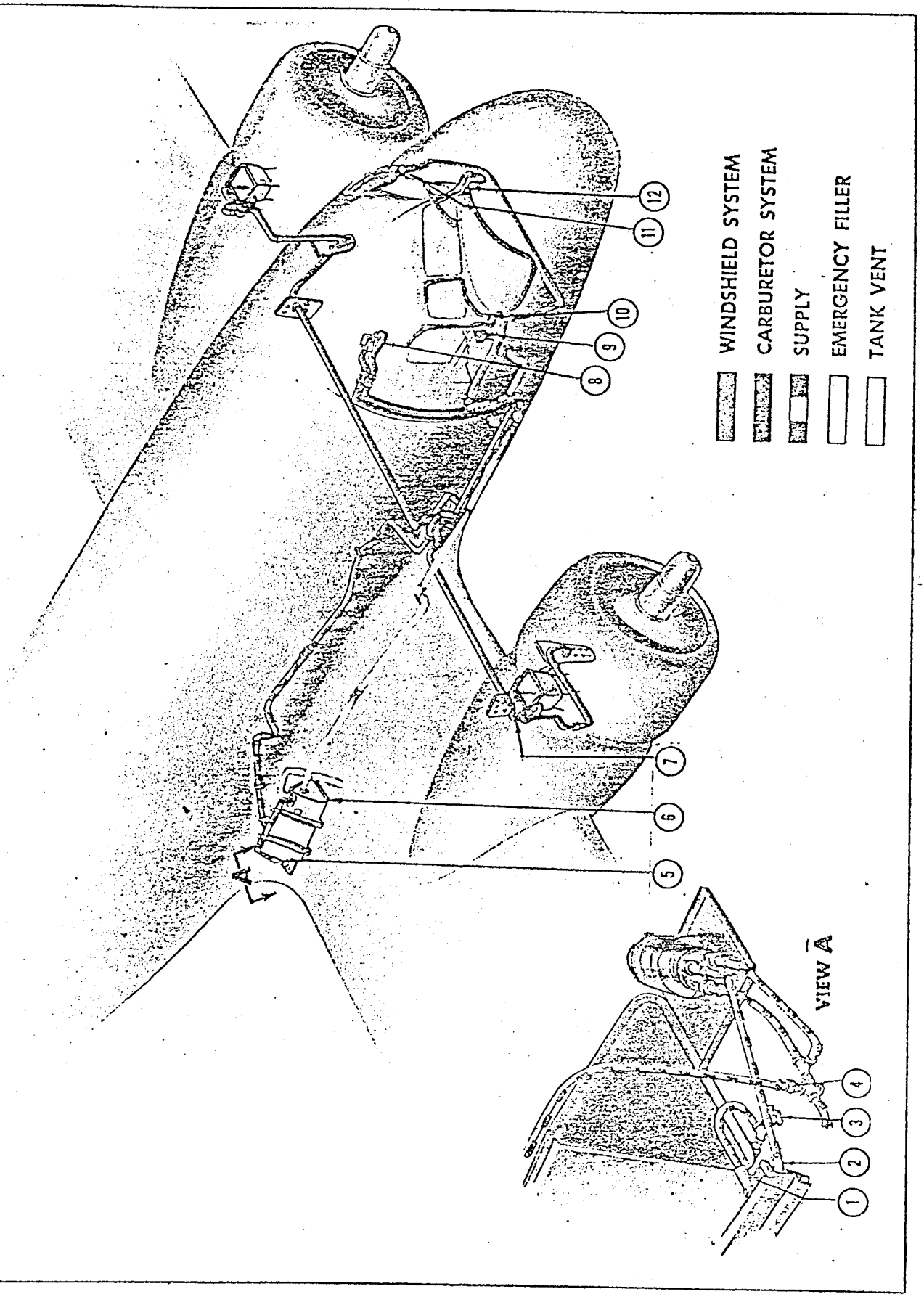

33.391

Figure 3-114. Windshield and Carburetor Anti-Icing System

Key to Figure 3-114

Item	Nomenclature	Item	Nomenclature
1.	Valve	7.	Manifold Assembly
2.	Filter	8.	Valve
3.	Drain Cock	9.	Bracket
4.	Bypass Valve	10.	Plug Valve
5.	Pump	11.	Plug Valve
6.	Tank Assembly	12.	Valve

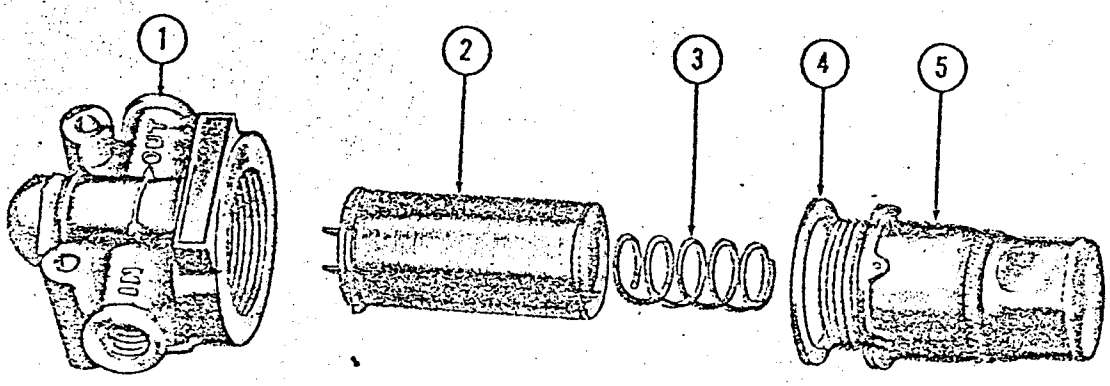

Figure 3-115. Windshield and Carburetor Alcohol Anti-Icing System Filter 14,552

Key to Figure 3-115

Item	Nomenclature
1.	Filter Heads (with pressure relief)
2.	Ceramic Filter
3.	Spring
4.	Gasket
5.	Filter Bowl

a. Disconnect the pipes.

b. Remove the filter.

3-482. DISASSEMBLY OF WINDSHIELD AND CARBURETOR ANTI-ICING SYSTEM FLUID FILTER.

a. Unscrew the bowl from the filter cap.

b. Remove the filter element and spring from the bowl.

3-483. MAINTENANCE OF WINDSHIELD AND CARBURETOR ANTI-ICING SYSTEM FLUID FILTER.

a. Clean all parts.

b. Clear the passageway in the cap with compressed air.

c. Rinse the filter element, using approved solvent to remove the sediment.

3-484. ASSEMBLY OF WINDSHIELD AND CARBURETOR ANTI-ICING SYSTEM FLUID FILTER.

a. Insert the spring and filter element in the bowl.

b. Install a new bowl gasket.

c. Screw the bowl to the cap.

3-485. INSTALLATION OF WINDSHIELD AND CARBURETOR ANTI-ICING SYSTEM FLUID FILTER.

a. Position the filter.

b. Connect the pipes.

3-486. WINDSHIELD AND CARBURETOR ANTI-ICING SYSTEM ELECTRIC PUMP. *(See figure 3-116.)*

3-487. The alcohol pump is a direct-driven, positive-displacement, cam-type fluid metering pump. The pump assembly has dual outlet ports and is designed to produce the equivalent output of two separate pumps. It is located aft of the supply tank and is mounted on a bracket attached to the wing structure. The assembly consists of a motor and a pump section secured together by four screws. A rotating assembly is connected to the motor by means of a shaft. The assembly draws the fluid from the inlet port through the drilled passageways in the shaft and then through the two outlet ports. An ON, OFF, and MOM switch, located on the electrical control panel in the flight compartment, controls the carburetor and windshield anti-icing pump.

3-488. REMOVAL OF WINDSHIELD AND CARBURETOR ANTI-ICING SYSTEM ELECTRIC PUMP.

a. Remove the screws attaching the pump mounting plate to the bracket.

b. Disconnect the electrical connectors.

c. Disconnect the pipes and remove the pump.

3-489. DISASSEMBLY OF WINDSHIELD AND CARBURETOR ANTI-ICING SYSTEM ELECTRIC PUMP. *(See figure 3-116.)*

a. Remove the four attaching screws and separate the pump and motor.

b. Remove the screws and the brush covers.

c. Remove the springs and brushes.

3-490. MAINTENANCE OF WINDSHIELD AND CARBURETOR ANTI-ICING SYSTEM ELECTRIC PUMP.

a. Replace worn brushes.

b. Clean the armature.

c. Replace damaged gaskets and seals.

d. Clean the surfaces of the motor mounting plate.

3-491. ASSEMBLY OF WINDSHIELD AND CARBURETOR ANTI-ICING SYSTEM ELECTRIC PUMP.

a. Install the brushes and springs, tighten the brush covers and safety the covers with screws.

b. Assemble the pump and motor sections and fasten with the four screws.

3-492. INSTALLATION OF WINDSHIELD AND CARBURETOR ANTI-ICING SYSTEM ELECTRIC PUMP.

a. Attach the electrical connectors.

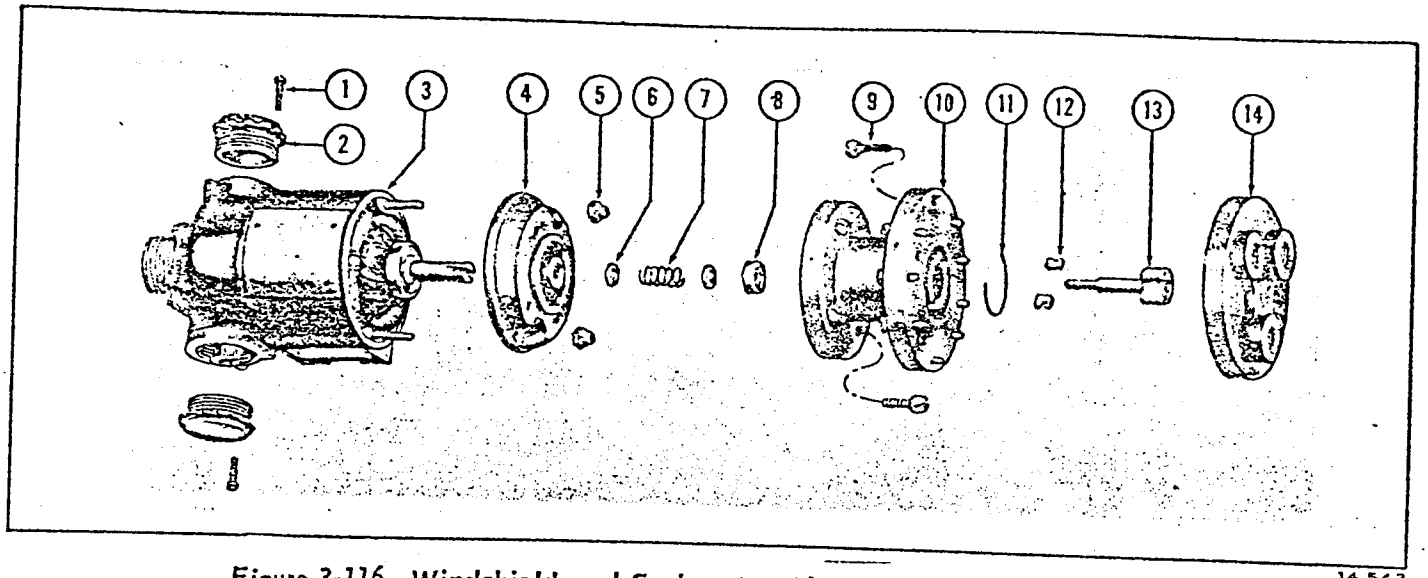

Figure 3-116. Windshield and Carburetor Alcohol Anti-Icing System Pump

Key to Figure 3-116

Item	Nomenclature	Item	Nomenclature
1.	Bushing Screw	8.	Drive Seal
2.	Bushing Cap	9.	Pump Housing Bolt
3.	Motor With Armature	10.	Pump Housing
4.	Motor Bearing Housing	11.	Lock Ring
5.	Housing Nut	12.	Blades
6.	Washer	13.	Pump Cam
7.	Spring (seal retaining)	14.	Housing Cap

b. Connect the pipes to the pump.

c. Fasten the pump mounting plate to the bracket.

3-493. WINDSHIELD AND CARBURETOR ANTI-ICING SYSTEM DRAIN COCK.

3-494. The drain cock for the anti-icing system is located in the tank feedpipe aft of the tank unit.

3-495. WINDSHIELD AND CARBURETOR ANTI-ICING SYSTEM CONTROL NEEDLE VALVE.

3-496. A needle-type valve, located in the flight compartment, controls the rate of alcohol flow to the windshields.

3-497. REMOVAL OF WINDSHIELD AND CARBURETOR ANTI-ICING SYSTEM CONTROL NEEDLE VALVE.

a. Disconnect the pipes from the valve.

b. Remove the screws from the mounting plate and remove the valve.

3-498. INSTALLATION OF WINDSHIELD AND CARBURETOR ANTI-ICING SYSTEM CONTROL NEEDLE VALVE.

a. Position the valve mounting plate and fasten with the four screws.

b. Connect the pipes to the valve.

3-499. WINDSHIELD AND CARBURETOR ANTI-ICING SYSTEM RELIEF VALVE. *(See figure 3-117.)*

3-500. A relief valve, located in the pressure pipe, allows the excess fluid to return to the supply tank.

3-501. REMOVAL OF WINDSHIELD AND CARBURETOR ANTI-ICING SYSTEM RELIEF VALVE.

a. Disconnect the pipes.

b. Remove the valve.

3-502. INSTALLATION OF WINDSHIELD AND CARBURETOR ANTI-ICING SYSTEM RELIEF VALVE.

a. Position the valve.

b. Connect the pipe.

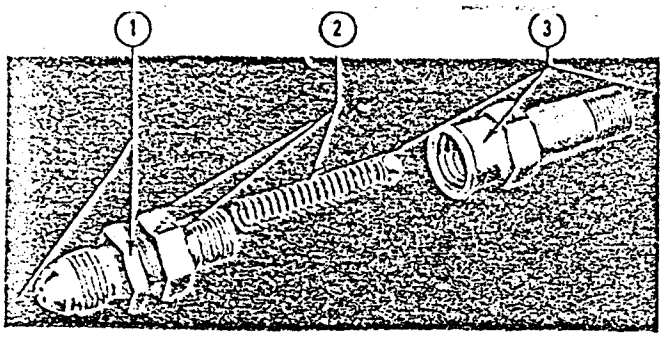

14,549

Figure 3-117. Carburetor Anti-Icing System Relief Valve (Exploded View)

Key to Figure 3-117

Item	Nomenclature
1.	Outlet Port and Lock Nut
2.	Regulator Nut, Cap, and Spring
3.	Ball, Barrel, and Inlet Port

3-503. CARBURETOR ANTI-ICING SYSTEM. *(See figure 3-114.)* The carburetor anti-icing system pump supplies alcohol from the main tank, through a filter, shutoff valve, manifold, and through the spray nozzles in the carburetor duct assembly.

3-504. CARBURETOR ANTI-ICING SYSTEM MANIFOLD AND DISTRIBUTOR PIPING.
(See figure 3-118.)

3-505. The alcohol manifold distributes the fluid from the supply pipe to the distributor pipes. The manifold is secured by a clamp to the bottom of the airscoop cowling. It consists of a 4-inch tapered aluminum pipe with two short aluminum pipes extending from the body. A short hose connects the supply pipe to the manifold. The distributor pipes are connected to the manifold outlets with short hoses and to the carburetor duct assembly with nipples. Each nipple contains a nozzle fitting which sprays the fluid into the adapter assembly.

3-506. REMOVAL OF CARBURETOR ANTI-ICING SYSTEM MANIFOLD AND DISTRIBUTOR PIPING.

a. Remove the attaching clamp from the pipe.

b. Remove the hoses connecting the manifold pipes to the distributor pipes and supply pipe.

c. Remove the manifold and disconnect the distributor pipes from the nipples.

3-507. INSTALLATION OF CARBURETOR ANTI-ICING SYSTEM MANIFOLD AND DISTRIBUTOR PIPING.

a. Connect the nipple and the flange to the distributor pipe.

b. Attach the manifold to the connecting pipes.

c. Connect the hoses to the manifold and distributor pipes with clamps.

3-508. CARBURETOR ANTI-ICING SYSTEM CONTROL VALVE.

3-509. The carburetor anti-icing control valve, located in the pilot's compartment to the right and above the co-pilot's panel, controls the supply of de-icing fluid from the alcohol tank to the carburetor.

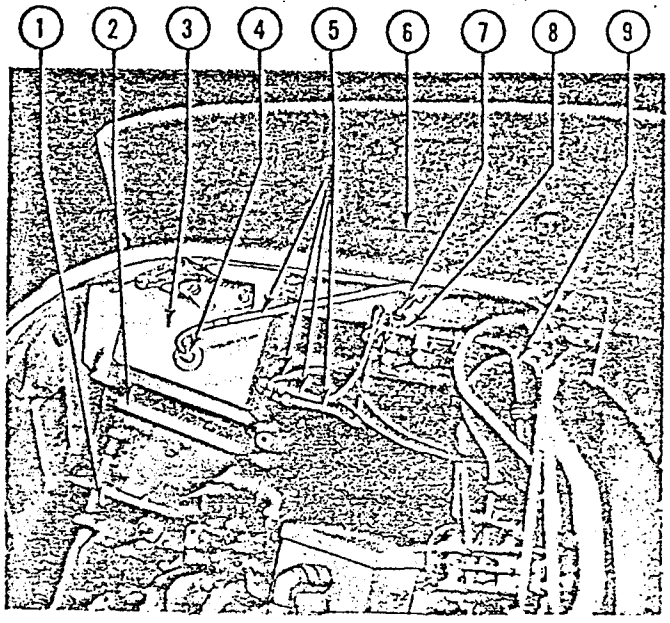

14,550

Figure 3-118. Carburetor Anti-Icing System Manifold and Carburetor Duct

Key to Figure 3-118

Item	Nomenclature
1.	Carburetor
2.	Carburetor Adapter
3.	Duct
4.	Nozzle, Flange, and Nipple
5.	Distributor Piping
6.	Air Induction Scoop
7.	Hose
8.	Manifold
9.	Supply Pipe

3-510. REMOVAL OF CARBURETOR ANTI-ICING SYSTEM CONTROL VALVE.

a. Turn OFF the carburetor anti-icing shutoff valve.

b. Disconnect and cap the pipes.

c. Remove the handle, the four screws, and the valve.

3-511. INSTALLATION OF CARBURETOR ANTI-ICING SYSTEM CONTROL VALVE.

a. Attach the valve to the bracket and tighten the four screws.

b. Install the handle and connect the pipes.

3-512. **PROPELLER ANTI-ICING SYSTEM.** *(See figure 3-113.)* The propeller anti-icing system prevents ice from forming on the propeller blades. The fluid is pumped from the supply tank, through a shutoff valve, a filter, and a pump, and into a slinger ring installed on the propeller hub. Distributor pipes from the slinger ring supply alcohol to each blade. The pump is turned ON or OFF by a switch on the pilot's electrical control panel. A rheostat is installed to the right of the tank to regulate the fluid flow by controlling the speed of the pump motor.

3-513. PROPELLER ANTI-ICING SYSTEM SUPPLY TANK.
(See figure 3-119.)

3-514. The 4.2 US-gallon duralumin supply tank for the propeller anti-icing system is supported by metal straps riveted to four brackets which are riveted to the bulkhead directly aft of the pilot's seat. The top of the tank contains a filler neck and vent pipe extending through the top of the bulkhead and fuselage. A drain connection to the supply pipe is located at the bottom of the tank.

3-515. REMOVAL OF PROPELLER ANTI-ICING SYSTEM SUPPLY TANK.

a. Disconnect the vent pipe from the top of the tank.

b. Disconnect the pipe from the bottom of the tank.

c. Loosen the turnbuckles on the straps and remove the tank.

3-516. TEST BEFORE INSTALLATION OF PROPELLER ANTI-ICING SYSTEM SUPPLY TANK. Testing of the anti-icing fluid supply tank is performed as outlined in paragraph 3-472.

3-517. INSTALLATION OF PROPELLER ANTI-ICING SYSTEM SUPPLY TANK.

a. Place the tank in position and secure the straps.

b. Connect and tighten the pipe to the bottom of the tank.

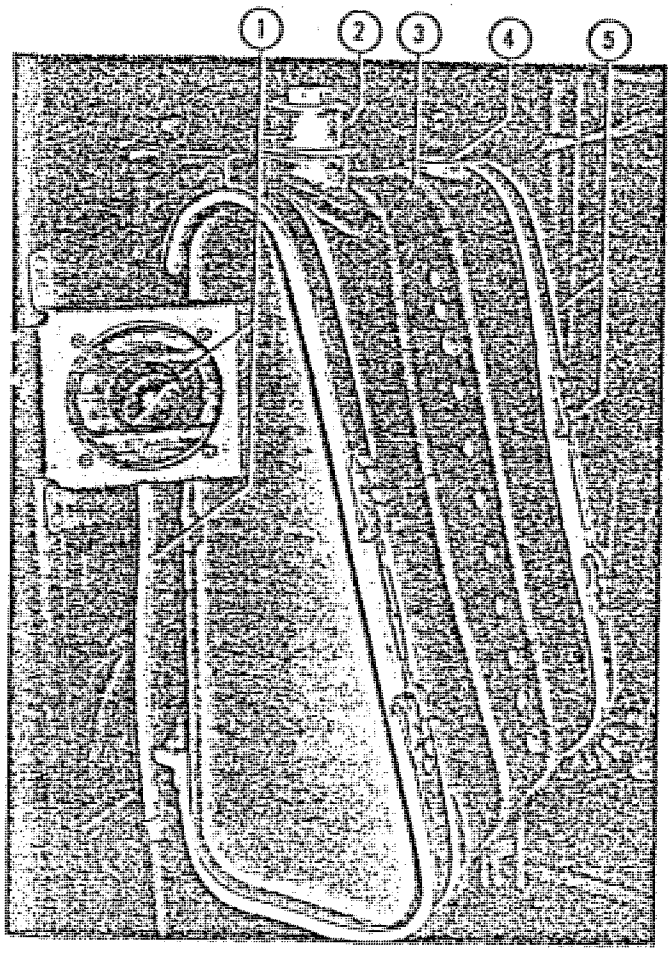

33,412

Figure 3-119. Propeller Anti-Icing System Fluid Supply Tank and Rheostat

Key to Figure 3-119

Item	*Nomenclature*
1.	Rheostat and Electrical Connection
2.	Filler Neck and Cap
3.	Tank
4.	Vent Pipe
5.	Supporting Strap and Turnbuckles

c. Connect the vent pipe to the top of the tank.

3-518. PROPELLER ANTI-ICING SYSTEM PUMP.
(See figure 3-120.)

3-519. The propeller anti-icing system pump is mounted below the propeller de-icing tank in the flight compartment. The pump contains three ports at the lower side; and inlet port is connected to the filter, and two outlet ports are each connected to a discharge pipe on either side of the inlet port. On the upper side is an electrical connection to the rheostat. The pump has an output of 2 to 12 quarts an

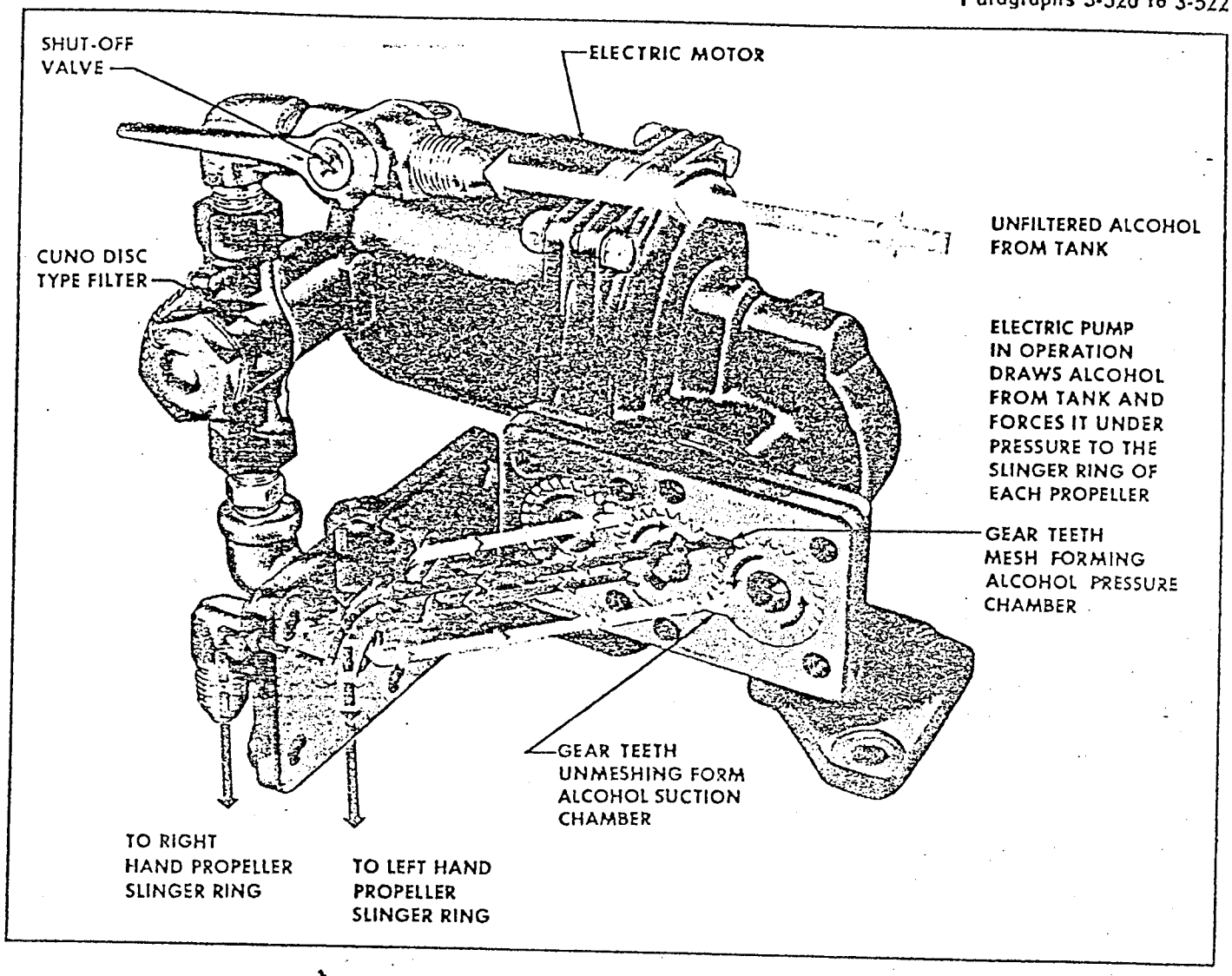

Figure 3-120. Propeller Anti-Icing System Pump Showing Operation (C-47 Airplanes)

33,413

hour, at 15 to 20 pounds psi pressure. The rated pump suction is 3 inches of mercury (Hg) with a maximum suction of 8 inches Hg. The pump unit consists of a 2-pole, series-wound electric motor, reduction gearing, and the pump assembly. The explosion-proof sealed motor drives the pump section indirectly by means of 40:1 worm and wheel reduction gear connected to a shaft which drives the center gear of the pump through a coupling. The center or drive gear of the pump operates the outer gears, which float in the center gear plate assembly. Fluid enters the inlet port and then flows to the suction side of the floating gears, which create the pressure for fluid supply to the propeller slinger rings. Grease lubrication is required for the bearings, and an occasional take-up adjustment is necessary for the motor brushes.

3-520. REMOVAL OF PROPELLER ANTI-ICING SYSTEM PUMP.

a. Disconnect the electrical connector from the rheostat.

b. Disconnect the outlet pipes.

c. Disconnect the pipe from the shutoff valve.

d. Loosen the four bolts attaching the pump to the floor.

e. Remove the pump.

3-521. DISASSEMBLY OF PROPELLER ANTI-ICING SYSTEM PUMP.

a. Remove the screws and the brush covers.

b. Remove the springs and brushes.

3-522. MAINTENANCE OF PROPELLER ANTI-ICING SYSTEM PUMP.

a. Replace worn brushes.

b. Clean the armature.

c. Replace damaged gaskets and seals.

d. Clean surfaces of the motor mounting plate.

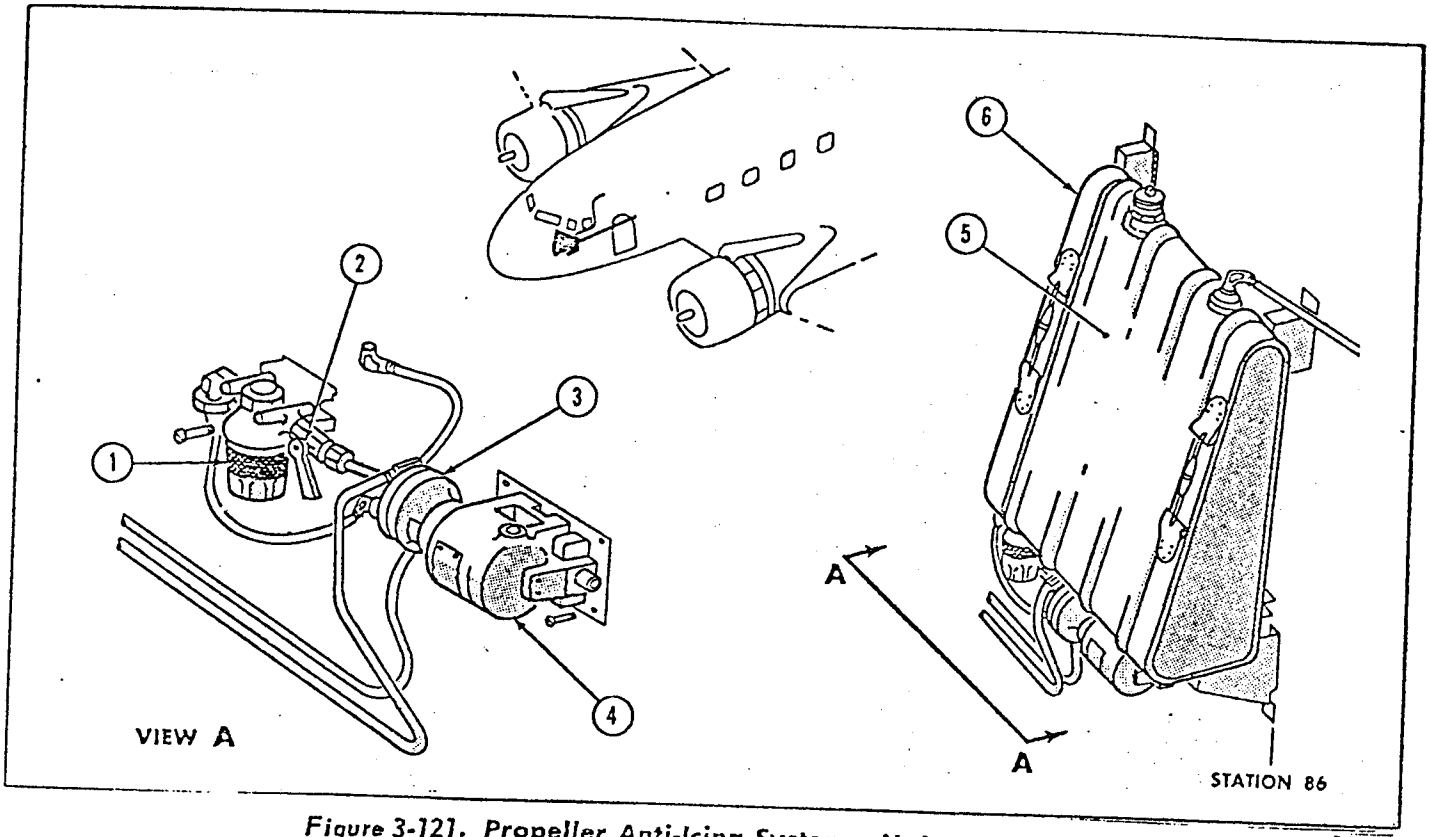

Figure 3-121. Propeller Anti-Icing System—Major Components

33,414

Key to Figure 3-121

Item	Nomenclature	Item	Nomenclature
1.	Filter	4.	Motor Housing
2.	Shutoff Valve	5.	Supply Tank
3.	Pump Housing	6.	Strap Assembly

3-523. ASSEMBLY OF PROPELLER ANTI-ICING SYSTEM PUMP. Install the brushes and springs, the brush covers, and the cover screws.

3-524. INSTALLATION OF PROPELLER ANTI-ICING SYSTEM PUMP.

a. Position the pump to the base on the floor and fasten with the four bolts.

b. Connect the pipe to the shutoff valve.

c. Connect the outlet pipes.

d. Connect the electrical connector to the rheostat.

3-525. TEST AFTER INSTALLATION OF PROPELLER ANTI-ICING SYSTEM PUMP.

a. Connect the pump into the system.

b. Position the shutoff valve ON.

c. Prime the pump with the motor running, and back off the two outlet pipes three turns.

d. Operate the pump until all air is expelled from the system and a steady flow of fluid is obtained.

e. Tighten the pipe nuts.

3-526. PROPELLER ANTI-ICING SYSTEM FLUID FILTER.
(See figure 3-121.)

3-527. The multiple-disc-type filter is connected between the supply tank shutoff valve and the inlet port of the pump. The fluid flows through the inlet port into the bowl containing the filter element secured to the base of the filter assembly. The filter element is composed of closely spaced discs which prevent small particles of foreign matter in the alcohol from entering the pump. After passing through the small aligned openings in the discs, the fluid flows through the outlet port to the pump.

3-528. REMOVAL OF PROPELLER ANTI-ICING SYSTEM FLUID FILTER.

a. Disconnect the pipe from the inlet port.

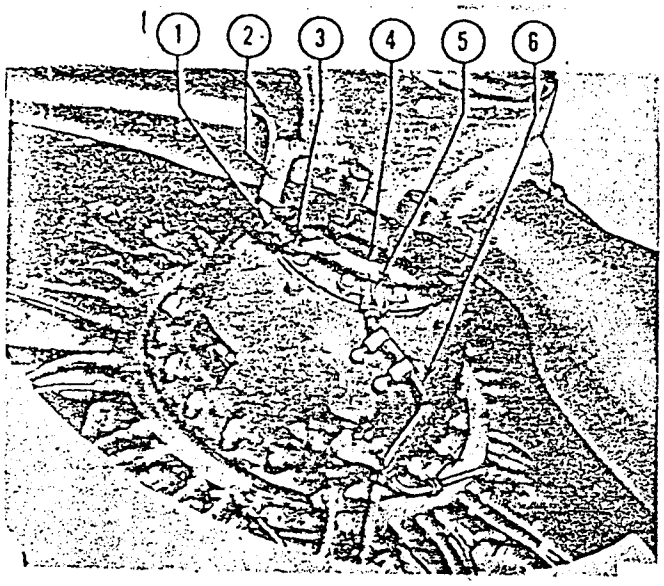

33,415

Figure 3-122. Propeller Anti-Icing Slinger Ring and Feeder Tube Assembly

Key to Figure 3-122

Item	*Nomenclature*
1.	Hose
2.	Bracket Assembly and Distributor Line
3.	Slinger Ring Line
4.	Slinger Ring
5.	Feeder Tube Assembly
6.	Supply Line

b. Unscrew the filter assembly from the pump.

3-529. DISASSEMBLY OF PROPELLER ANTI-ICING SYSTEM FLUID FILTER.

a. Insert a ⅛-inch diameter steel rod through the opening in the square of the bowl section and unscrew the bowl from the assembly.

b. Unscrew the filter element and remove it.

c. Remove the seal.

3-530. MAINTENANCE OF PROPELLER ANTI-ICING SYSTEM FLUID FILTER.

a. Clean all parts.

b. Clean passageways with compressed air.

c. Holding the filter element in one hand, carefully apply compressed air between the discs to remove dirt. If sediment is caked on the discs, carefully scrub them with approved solvent, being sure that they are not distorted in the process.

d. Replace the bowl section if cracked or if the threads are damaged.

e. Replace cap with cracks or damaged threads.

f. Replace damaged filter element.

g. Replace damaged gasket.

3-531. ASSEMBLY OF PROPELLER ANTI-ICING SYSTEM FLUID FILTER.

a. Screw the filter element to the cap.

b. Install a new gasket.

c. Screw the bowl into the cap and tighten with a steel rod inserted through the opening in the square of the bowl.

3-532. INSTALLATION OF PROPELLER ANTI-ICING SYSTEM FLUID FILTER.

a. Screw the filter into the outlet port of the pump.

b. Connect the supply pipe to the filter inlet port.

3-533. PROPELLER ANTI-ICING SYSTEM SHUTOFF VALVE.
(See figure 3-121.)

3-534. A manually operated valve, located between the supply tank and the filter, is provided to shut off the fluid supply from the tank to the pump.

3-535. REMOVAL OF ANTI-ICING SYSTEM SHUTOFF VALVE.

a. Drain the alcohol from the supply tank.

b. Disconnect the pipes from the shutoff valve, and remove it.

c. Plug the pipes.

3-536. INSTALLATION OF ANTI-ICING SYSTEM SHUTOFF VALVE.

a. Remove the plugs and connect the pipes to the valve.

b. Fill the alcohol tank as outlined in Section II.

3-537. PROPELLER ANTI-ICING SYSTEM SLINGER RING AND FEEDER TUBE ASSEMBLY.

3-538. The channeled slinger ring is fastened to the propeller hub *(see figure 3-122)*. Fluid is delivered to the slinger ring from the feeder tube assembly bolted to the propeller reduction drive case. Centrifugal force distributes the fluid from the slinger ring through the outlets to the surface of the propeller blades.

Note

Fluid feed boots are installed on the propeller blades when the airplane is winterized. The boots are cemented along the leading edge of the blades about two-thirds of the distance from the hub to the tip. The strips are grooved to provide equal distribution of the fluid.

3-539. REMOVAL OF PROPELLER ANTI-ICING SYSTEM SLINGER RING FEEDER TUBE ASSEMBLY.

a. Remove the clamps and the hose between the distributor supply pipe and the feeder tube assembly.

b. Remove the propeller as outlined in Section IV.

c. Remove the attaching bolts and the feeder tube assembly.

3-540. INSTALLATION OF PROPELLER ANTI-ICING SYSTEM SLINGER RING FEEDER TUBE ASSEMBLY.

a. Position the feeder tube assembly on the propeller reduction drive case and fasten with bolts.

b. Connect the supply pipe to the feeder tube assembly with hose and clamps.

c. Install the propeller as outlined in Section IV.

3-541 FIRE EXTINGUISHER SYSTEM.

3-542. GENERAL DESCRIPTION. *(See figures 3-123 through 3-126.)* The C-47 and C-117 airplanes are equipped to extinguish engine fires instantaneously while in flight or on the ground. A fire in either the left or right engine area can be extinguished from the pilot's compartment by means of a bromochloromethane (CB) fire extinguisher cylinder assembly, located on the outboard side of each nacelle at station 187, which is connected by pipes to the spray ring located on each engine.

3-543. OPERATION OF FIRE EXTINGUISHER SYSTEM. To operate the CB fire extinguisher system set the selector switch for the engine affected in the UP position and the discharge switch in the ON position. This releases the extinguishing liquid through the pipes under pressure to the engine area to smother the fire.

3-544. REMOVAL, MAINTENANCE, AND INSTALLATION OF FIRE EXTINGUISHER SYSTEM COMPONENTS. The removal, maintenance, and installation of the bromochloromethane (CB) fire extinguisher system components are accomplished as outlined in the following paragraphs.

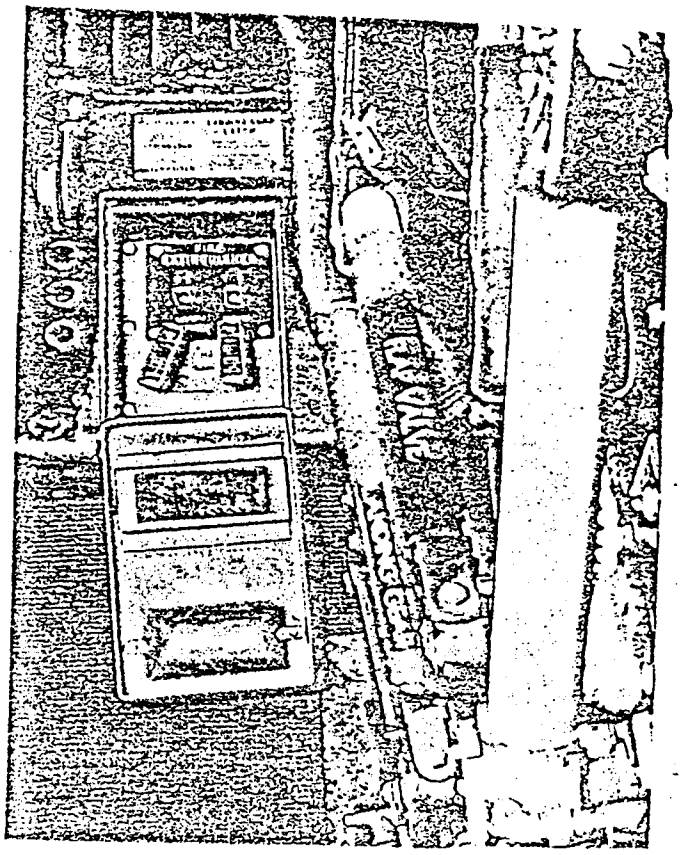

22,590

Figure 3-123. CB Fire Extinguisher System Control Panel

3-545. REMOVAL OF FIRE EXTINGUISHER SYSTEM CYLINDER.

CAUTION

When it is necessary to remove a charged cylinder be sure that all electrical power is removed from the airplane before attempting to disconnect the electrical connectors from the cylinder bonnet.

a. Disconnect the electrical connectors from the cylinder bonnet.

b. Disconnect the hose assembly from the union on the cylinder bonnet and plug the hose. Cap the union.

c. Remove the attaching bolts and the cylinder from the support.

3-546. INSTALLATION OF FIRE EXTINGUISHER SYSTEM CYLINDER.

a. Position the cylinder on the support with the outlet facing aft.

b. Fasten the cylinder with the attaching bolts.

c. Connect the hose assembly to the union on the cylinder bonnet.

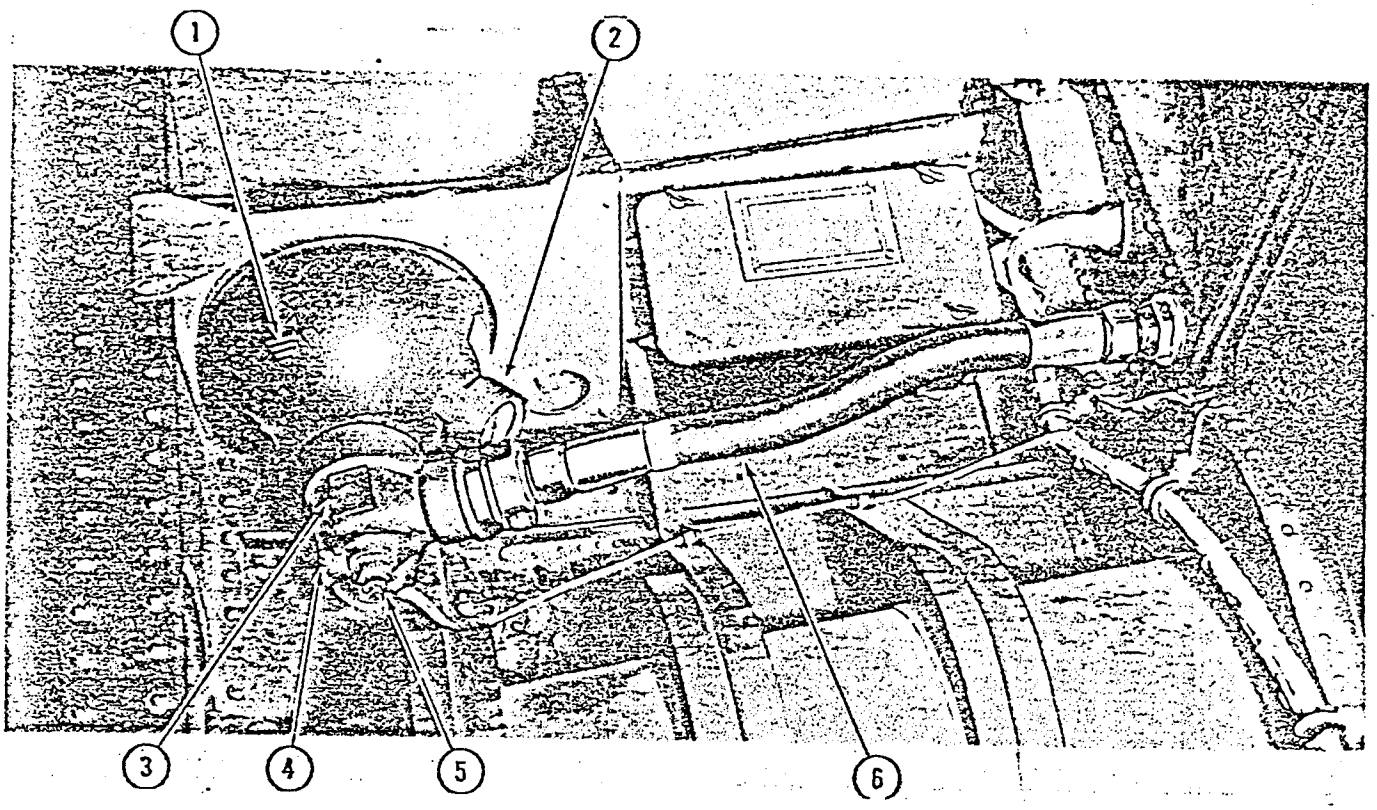

22,589

Figure 3-124. CB Fire Extinguisher Unit—Nacelle Piping and Wiring

Key to Figure 3-124

Item	Nomenclature	Item	Nomenclature
1.	CB Fire Extinguisher Container	4.	Bonnet Ground Terminal
2.	Pressure Gage	5.	Bonnet Electrical Terminal
3.	Bonnet	6.	Hose From Container to Spray Ring

d. Connect the electrical connectors to the terminals on the cylinder bonnet after making certain that all electrical power has been removed from the airplane.

3-547. MAINTENANCE OF FIRE EXTINGUISHER SYSTEM.

WARNING

Bromochloromethane (CB) is toxic and corrosive. Use extreme care during maintenance of the system. Wear approved rubber gloves and protective clothing and avoid breathing CB vapor during all inspection, purging, and cleaning operations. Do not permit unprotected personnel in the immediate area during operations.

a. Replace a discharged cylinder with a fully charged cylinder which has been approved.

b. Replace the cylinder hose assembly or pipes whenever there is evidence of leakage or corrosion.

c. Check electrical connections for security and condition.

Note

For electrical check of the fire extinguisher system, including the cartridge continuity, refer to Section VIII and the wiring diagram in Section XII.

3-548. PURGING AND CLEANING OF FIRE EXTINGUISHER SYSTEM AFTER DISCHARGE.

CAUTION

Do not purge or clean the fire extinguisher system piping with cleaning fluid or water while it is installed on the airplane.

a. Remove the spray nozzle units from the ends of the pipes.

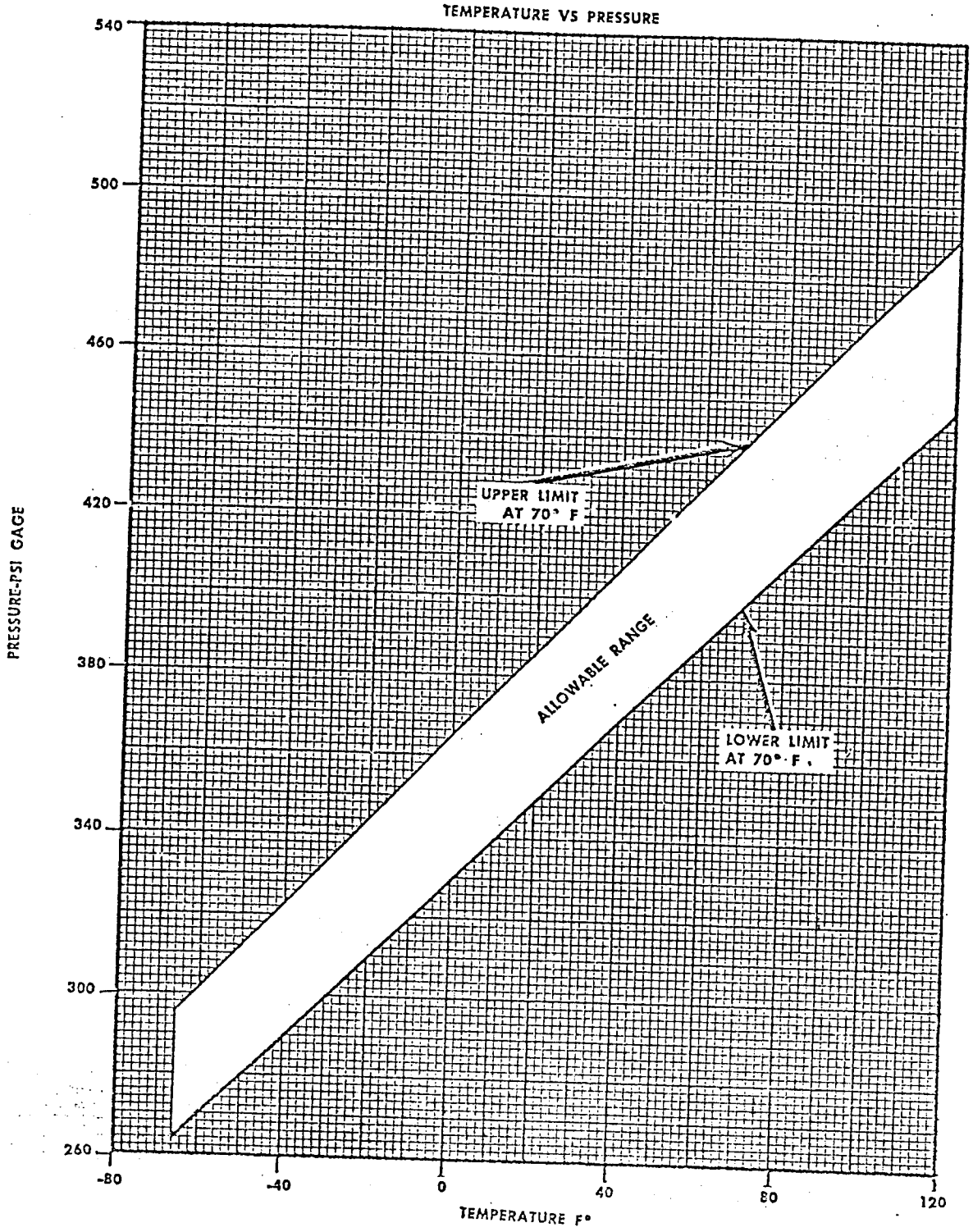

Figure 3-125. Bromochloromethane (CB) Bottle Temperature Pressure Chart

V2-3B

b. Bleed any dust from the breather hoses by holding the dust cap open and carefully opening the EMERGENCY ON valve for 10 to 20 seconds.

c. Check the position of the outlet elbow. If the knurled collar is loose, be sure the gasket is in its proper place; then manually tighten the knurled collar. On earlier-model regulators, in which the outlet elbow is free to turn when the knurled collar is loose, first position the elbow one-half turn from the desired position. Turn the collar until it begins to feel tight, and then turn both the collar and elbow one-half turn. Secure the collar with the elbow pointed in the proper direction.

d. Set the diluter at the position marked 100% OXYGEN (AUTO-MIX OFF), and listen carefully for escaping oxygen. There must be no leakage.

e. Blow gently into the open end of the mast-to-regulator tubing with the regulator diluter lever set at 100% OXYGEN. Any escape of air indicates a leaky diaphragm, a faulty relief valve or air inlet check valve, or a leak in the mask-to-regulator tubing. Replace the faulty component.

Note

Blowing too hard into the regulator tube unseats the second-stage relief valve (1.00 to 1.25 psi), thereby giving a false indication of leakage.

f. Set the diluter at NORMAL OXYGEN (AUTO-MIX ON) and remove the lockwire which safeties the EMERGENCY valve. Open the EMERGENCY valve wide for a moment and note the steady flow of oxygen. If the oxygen flow is unsteady, or if it fails to stop when the valve is closed, replace the regulator. Safety the EMERGENCY valve with annealed 0.0179-inch diameter copper wire after it is determined that the regulator is operating satisfactorily.

g. Increase the pressure in the system to 450 psi and check the reading on the master gages.

h. Apply bubble fluid to all pipe connections, valves, and fittings. Repair all leaks.

i. Charge the entire oxygen system, including cylinders, to 450 psi at a rate not exceeding 25 psi per minute. After 1 hour, record the airplane temperature and time on the inspection card. Check the oxygen pressure again before the next flight. If more than 4 psi for each 6-hour period (15 psi for each 24-hour period) has been lost after correction for temperature change, as shown on the Oxygen Pressure Correction Graph *(see figure 3-136)*, the system must be reworked and given an additional test.

3-611. FUNCTIONAL TEST OF LOW-PRESSURE CONSTANT-FLOW OXYGEN SYSTEM. Perform the functional test of the low-pressure constant-flow oxygen system as outlined in the following steps.

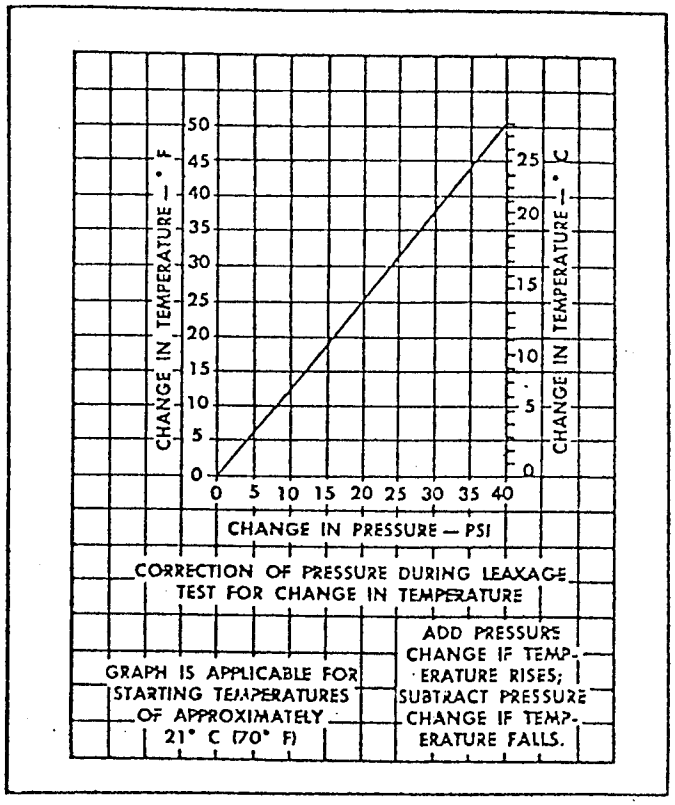

33,426

Figure 3-136. Oxygen Pressure Correction Graph

a. Close the valve on the constant-flow oxygen filler pipe. Remove the plug in the hose connection provided for the J-1 cylinder and attach a filler valve and master gage unit.

b. Charge the constant-flow oxygen filler and supply pipe through the attached recharger unit to 450 psi.

Note

Pressure must remain above 100 psi on the inlet side of A-11 regulators during the functional and leakage test of the automatic couplings.

c. Fill the constant-flow oxygen leak tester unit No. 44B10627 to a maximum of 35 psi, and plug the leak tester hose into an automatic coupling on the constant-flow outlet manifold. Open the valve on the leak tester and allow the pressure to equalize between the leak tester cylinder and constant-flow manifold, so that the final pressure is between 25 and 30 psi.

d. With pressure on the constant-flow manifold between 25 and 30 psi, insert a spare mask plug momentarily into each automatic coupling, and test for free movement of the valve core and free flow of oxygen through the restricted opening in the automatic couplings. The manifold block must be replaced when there is pipe blockage or sticking of the valve core.

3-612. LEAKAGE TEST OF OXYGEN SYSTEM. Perform the leakage test of the oxygen system as outlined in the following steps.

a. After the functional test, disconnect the leak-tester hose coupling from the automatic coupling, and recharge the leak-tester unit to approximately 35 psi. Recharge the constant-flow system manifold with the leak tester by plugging into the constant-flow outlet coupling. On Type A-11 regulators, the back pressure against the outlet side of the regulator must not exceed 30 psi.

b. After a 5-minute pressure equalization period, observe the reading on the leak-tester gage. There must be no drop in the pressure reading between 25 to 30 psi for an additional 15 minutes.

c. Plug the master gage into the constant-flow oxygen system at the J-1 cylinder connection. The reading on this gage must indicate 425 (±25) psi after a minimum of 5 minutes for pressure level-off. The reading must be recorded at the same time as the gage reading on the leak tester. No drop in pressure for this section of the constant-flow system is permissible during a period of 15 additional minutes.

d. Determine leakage of the filler pipe check valves by charging the system to 50 psi. To seat the check valves in the filling manifold, insert the AN6027-1 filler valve adapter into the filler valve. Allow sufficient time for the filler pipe to drain and then apply a film of bubble fluid over the open end of the adapter. If the film is broken within 10 seconds, a leaky check valve is indicated. Locate and replace the faulty check valve.

-613. PURGING OF OXYGEN SYSTEM. Foreign matter or moisture may enter the oxygen system during pipe or component removal and when pipes and components have been left uncapped or improperly protected. Purging of the system is mandatory when such contamination has occurred. Purging of the oxygen system is accomplished by connecting a service trailer supply to the oxygen filler valve. Set the oxygen trailer regulator to 50 psi and open the EMERGENCY valve, allowing oxygen to flow through the system for at least 30 minutes.

614. OXYGEN SYSTEM WINTERIZATION. Specific instructions for winterizing the oxygen system are outlined in Section II.

3-615. WINDSHIELD WIPER SYSTEM.

3-616. GENERAL DESCRIPTION. *(See figure 3-137.)* A hydraulically operated windshield wiper system is provided for the 2-section windshield. The windshield wipers are controlled by two needle-type control valve knobs, one for each windshield, and are located in the vee of the windshield above the main instrument panel. During heavy rain, or if ice starts to form on the windshield, the wipers can be operated in conjunction with the windshield deicing system. Hydraulic fluid for operating the windshield wipers is routed from a cross fitting in the brake system pressure pipe. On early C-47 airplanes, the fluid supply flows through a tube to the windshield wiper control valve, which is located on the left side of the pilots' main instrument panel. On late C-47 and C-117 airplanes, the hydraulic fluid supply flows through a tube to the two windshield wiper control valves. These valves control the operating speed of the wiper blades by regulating hydraulic fluid flow from the control valves to the wiper actuators. The return hydraulic fluid from the two independently operated wipers, flows to a cross fitting located in the brake system return pipe and then to the hydraulic reservoir.

CAUTION

Do not operate the wiper blades on dry glass. Wet the windshield with a clean sponge saturated in water, or insert a strip of paper or protective material under the blades. This keeps the windshield glass panels from being scratched and prevents unnecessary wear of the rubber wiper blades.

3-617. TROUBLE SHOOTING OF WINDSHIELD WIPER SYSTEM. Trouble shooting of the windshield wiper system is accomplished as outlined in table 3-32.

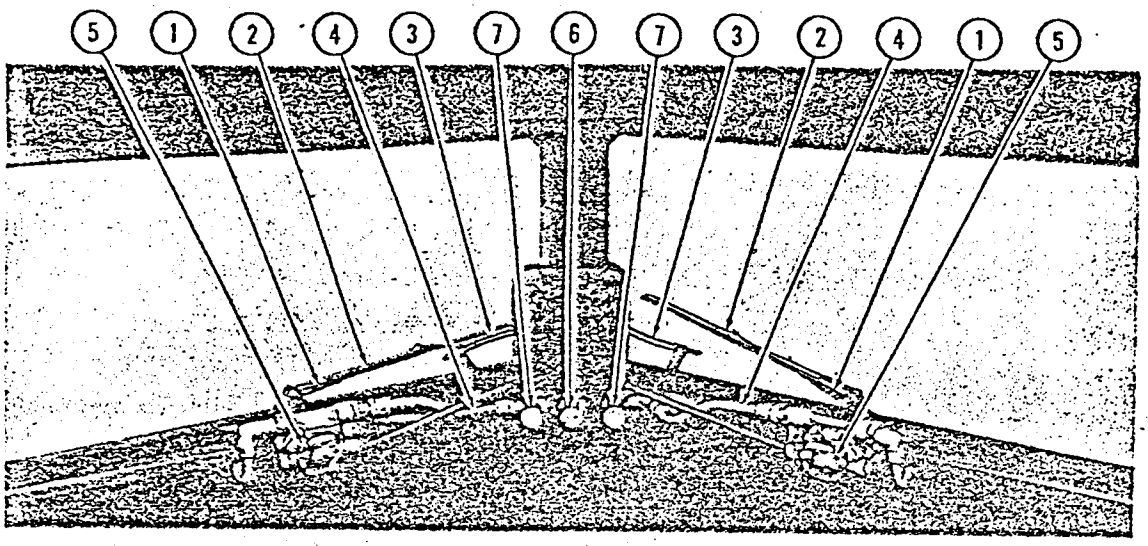

1. Wiper Operating Arms
2. Wiper Blades
3. Anti-icing Tubes
4. Flexible Shaft Housings
5. Wiper Motor
6. Windshield Anti-Icing Control Valve
7. Windshield Wiper Control Valve

Figure 3-137. Windshield Wipers Installed

14,320

TABLE 3-32

TROUBLE SHOOTING - WINDSHIELD WIPER SYSTEM

TROUBLE	PROBABLE CAUSE	REMEDY
a. Leaks at piping connections.	Damaged flare, cracks, or splits.	Replace piping; fabricate flare carefully.
	Insufficient or too much torque.	Torque B-nut to correct torque load.
	Foreign material under flare edge.	Remove foreign material, and torque.
	Cross threading of pipes.	Replace fitting, and if necessary replace pipe.
	Mismated parts.	Replace with correct parts.
	Sealing compound washed out or not properly used.	Apply compound to first two threads.
	Seizing of threads.	Replace fitting.
b. Windshield wipers operate sluggishly or do not operate.	Mechanical failure in drive shaft between motor and wiper blades.	Remove wiper assembly and motor units. Check motor shaft. Replace motor shaft or defective parts.

618. **REMOVAL AND INSTALLATION OF COMONENTS OF WINDSHIELD WIPER SYSTEM.** Removal ıd installation of the components of the windshield iper system are accomplished as outlined in the folwing paragraphs.

619. WINDSHIELD WIPER SYSTEM NEEDLE CONTROL VALVE.
(See figure 3-137.)

620. The windshield wiper control valve is a needlepe unit which controls the amount of hydraulic fluid the respective windshield wiper actuator, to regute the speed of operation. The needle valve contains ı orifice unit which prevents overspeeding of the iper blades.

CAUTION

Do not attempt operation of the windshield wipers without the orifice unit installed in the control valve.

621. REMOVAL OF WINDSHIELD WIPER SYSTEM NEEDLE CONTROL VALVE.

a. Relieve the hydraulic system pressure by opering the wing flaps.

b. Disconnect and cap the hydraulic piping from ıe control valve.

c. Remove the nuts attaching the control valve to ıe instrument panel and remove the valve.

622. INSTALLATION OF WINDSHIELD WIPER SYSTEM NEEDLE CONTROL VALVE.

a. Position the control valve on the instrument ınel and tighten the attaching nuts to the bracket.

b. Connect the hydraulic piping to the control valve.

623. TORQUE LOADS, FITTING INSTALLAION, AND B-NUT INSTALLATION IN WINDHIELD WIPER SYSTEM. For information on rque loads, fitting, and B-nut installation charts, fer to Section II.

624. WINDSHIELD WIPER SYSTEM ACTUATING ASSEMBLY.
(See figure 3-137.)

3-625. The windshield wiper system actuating assembly consists of a hydraulic motor, a drive shaft, and a windshield wiper blade assembly. One assembly is mounted at the bottom of each section of the windshield. The travel of the wiper blade is adjusted by setting the index plate screw located on the motor housing.

3-626. REMOVAL OF WINDSHIELD WIPER SYSTEM ACTUATING ASSEMBLY.

a. Relieve the hydraulic pressure by operating the wing flaps.

b. Disconnect and cap the hydraulic piping from the windshield wiper motor unit.

c. Remove the two screws, gasket, seal, and spacers from the front of the windshield wiper assembly.

d. Remove the blade assembly and the nuts securing it from the motor drive shaft.

e. Remove the motor assembly from the inside of the flight compartment.

3-627. INSTALLATION OF WINDSHIELD WIPER SYSTEM ACTUATING ASSEMBLY.

a. In the flight compartment, insert the hydraulic motor shaft into the hole at the bottom edge of the windshield and connect the hydraulic piping to the motor.

b. One man is required to hold the two spacers in position while another man on the outside installs the two screws through the blade assembly, gasket, seal, spacers, and into the motor housing.

c. Secure the blade assembly to the motor drive shaft with the washer and nut.

3-628. MAINTENANCE OF WINDSHIELD WIPER SYSTEM ACTUATING ASSEMBLY.

a. Inspect the motors and hydraulic piping for leakage by slowly operating the wiper blades.

b. While the wiper blades are operating, check that the stroke is constant and that the blades do not strike the bottom of the windshield frame.

c. Turn off the needle control valve and inspect the rubber wiper blades for damage or deterioration.

d. Test the spring tension of the wiper blades with a spring scale. The scale reading must record 32 ounces.

SECTION IV

POWER PLANT

4-1. POWER PLANT.

4-2. GENERAL DESCRIPTION. Flight power for the C-117C, C-47 and C-47A airplanes is supplied by two R-1830-92 Twin Wasp engines. On C-47D and C-117B airplanes, flight power is supplied by two R-1830-90D Twin Wasp engines. (C-47B and C-117A airplanes were originally outfitted with R-1830-90C Twin wasp engines. Most of these aircraft have now been modified to R-1830-90D engine.) These 14-cylinder engines are mounted on the forward face of the firewall and are covered by engine cowling. Fuel is supplied to the engine by a pressure-type downdraft carburetor. Ignition is provided by two magnetos and is distributed to the cylinder spark plugs by a shielded ignition harness assembly. Engine-driven accessories are mounted on the rear engine section. Cables connect the operating levers in the flight compartment with control units on the engine to govern carburetor mixture, throttle, and carburetor air positions. Flexible hose and piping which carry fluid will be identified by geometrical symbols and color code.

4-3. POWER PLANT QUICK-DISCONNECT COLOR CODING. All hose or pipe fittings, electrical disconnect fittings or terminal lugs, and power plant attach bolts installed in the power package, which connect with firewall-mounted components upon installation of the unit to complete fluid, electrical, and mechanical system junctions, shall be color-coded with International Orange Enamel, Specification AN-E-3. The enamel will be applied in stripes ½ to 1½ inches in length, not exceeding 1 inch in width, and, where possible, will be painted in a direction which parallels the direction of the removal of the part.

4-4. IDENTIFICATION COLORS AND SYMBOLS FOR CODING POWER PLANT FLUID SYSTEMS. *(See section II.)* All flexible hose and piping, which carry fluid to or from the power plant shall be identified with system identification tapes. One band shall be located on each hose or pipe segment, 24 inches or shorter. One band shall be located at each end of each hose or pipe segment longer than 24 inches. At least one band shall be visible on each side of the nacelle inner ring and diaphragm assembly, which separates the front and rear sections of the power plant. Vent and drainpipes shall be identified by the same colors and symbols as the related system.

4-5. INSTALLATION AND TIGHTENING OF HOSE CLAMPS. To insure the proper sealing of hose connections, and to prevent the breakage of hose clamps and damage to the hose, instructions on tightening hose clamps must be rigidly adhered to.

a. Hose clamps installed on *self-sealing hose,* must be torqued to 15 inch-pounds for original installation and maintained at the same torque value.

b. Hose clamps installed on *non-self-sealing hose,* must be torqued to 25 inch-pounds for original installation and maintained at the same torque value.

Note

If satisfactory sealing is not accomplished at the specified torque, examine the component parts of the connection and replace the parts as necessary.

c. In the absence of torque-limiting wrenches, use the *fingertight-plus turns method* shown in table 4-1. Due to the variance in hose clamp design and hose structure, the values given in the table are approximate. Exercise care when tightening the clamps by this method.

TABLE 4-1

HOSE CLAMP TIGHTENING FINGERTIGHT-PLUS TURNS METHOD

Initial installation only	Worm screw type clamp 10 threads per inch	Clamps — radial and other type — 28 threads per inch
Self-sealing hose approximately 15 inch-pounds	Fingertight plus 2 complete turns	Fingertight plus 2½ complete turns
All other Airplanes hose	Fingertight	Fingertight
Approximately 25 inch-pounds	Plus 1¼ complete turns	Plus 2 complete turns

TABLE 4-2
RETIGHTENING HOSE CLAMPS

If clamps do not seal at specified tightening, examine hose connections and replace parts as necessary.

The preceding is for initial installation and should not be used for loose clamps.

For retightening loose hose clamps in service, proceed as follows:

1. Nonself-sealing hose — If the clamp screw cannot be tightened with the fingers, do not disturb unless leakage is evident. If leakage is present, tighten one-quarter turn.
2. Self-sealing hose — If looser than fingertight, tighten to fingertight and add one-quarter turn.

4-6. GENERAL POWER PLANT TORQUE RECOMMENDATIONS IN INCH-POUNDS FOR NUTS, BOLTS, AND SCREWS. Unless otherwise noted, torque the nuts, bolts, and screws in accordance with values given in section II.

4-7. BT-NUT TORQUE VALUES FOR POWER PLANT INSTALLATIONS. Unless otherwise noted, torque the BT-nuts in accordance with values given in section II.

CAUTION

Overtightening of the nuts will severely damage or completely cut off the tube flares, and also will result in damage to the sleeve or nut of the fitting. If upon removal of the nut and the sleeve, the flare is found to retain less than 50 percent of the original wall thickness of the tube, it shall be rejected.

4-8. POWER PLANT CONTROLS. *(See figures 4-1 and 4-8.)* The power plant controls are operated by levers from the control pedestal, and consist of a throttle, carburetor mixture, carburetor air induction controls, cowl flaps, and propeller controls. A standard cable and bellcrank push-pull rod system, forward of the

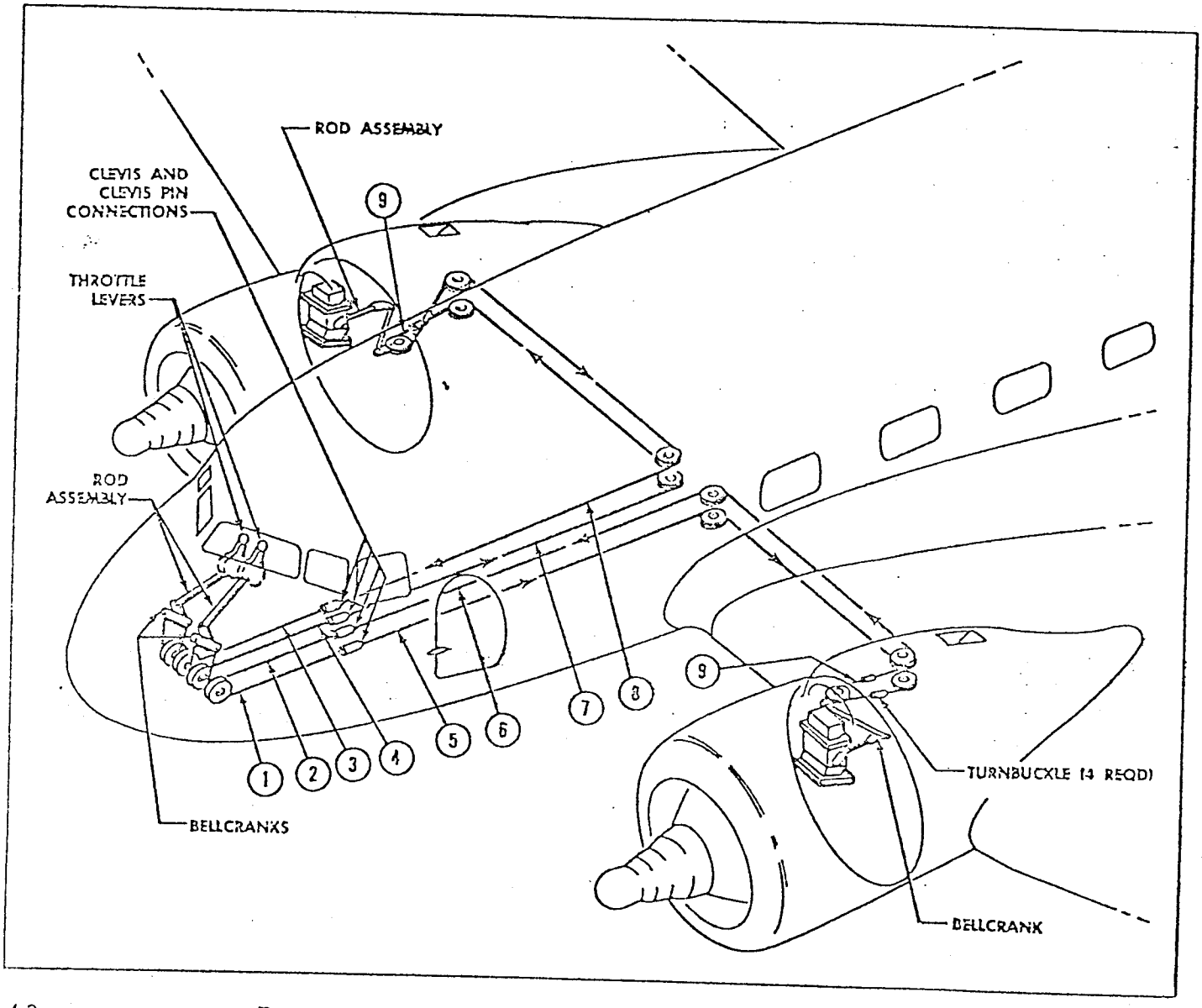

Figure 4-1. Throttle Control System - Key Drawing (Sheet 1 of 2)

33.667

CABLE REF NO.	DOUGLAS CABLE ASSEMBLY DRAWING NO.	TYPE	CABLE LENGTH		CABLE SIZE	FITTINGS			
			(L_1)	(L_2)		(1)	(2)	(3)	(4)
1	2115277-2	A	32 1/2		3/32 dia 7x7 flex.	1116245	AN667		
2	2115277-4	A	38		3/32 dia 7x7 flex.	1116245	AN667		
3	2115277-6	A	38		3/32 dia 7x7 flex.	1116245	AN667		
4	2115277-8	A	32 1/2		3/32 dia 7x7 flex.	1116245	AN667		
5	4114029-11	B	297 1/8	9	3/32 dia	2049217 -B-3	2049220 -16DS-3R AN155-16S	2049220 -16DS-3L	1116245
6	4114029-13	B	291 7/16	9	3/32 dia 7x7 flex.	2049217 -B-3	2049220 -16DS-3R AN155-16S	2049220 -16DS-3L	1116245
7	4114029-23	B	291 13/16	9	3/32 dia 7x7 flex.	2049217 -B-3	2049220 -16DS-3R AN155-16S	2049220 -16DS-3L	1116245
8	4114029-25	B	297 5/32	9	3/32 dia	2049217 -B-3	2049220 -16DS-3R AN155-16S	2049220 -16DS-3L	1116245
9	5355026-18	C	24 1/16		3/32 dia	AN666-3L	AN663-3R	AN666-3L	

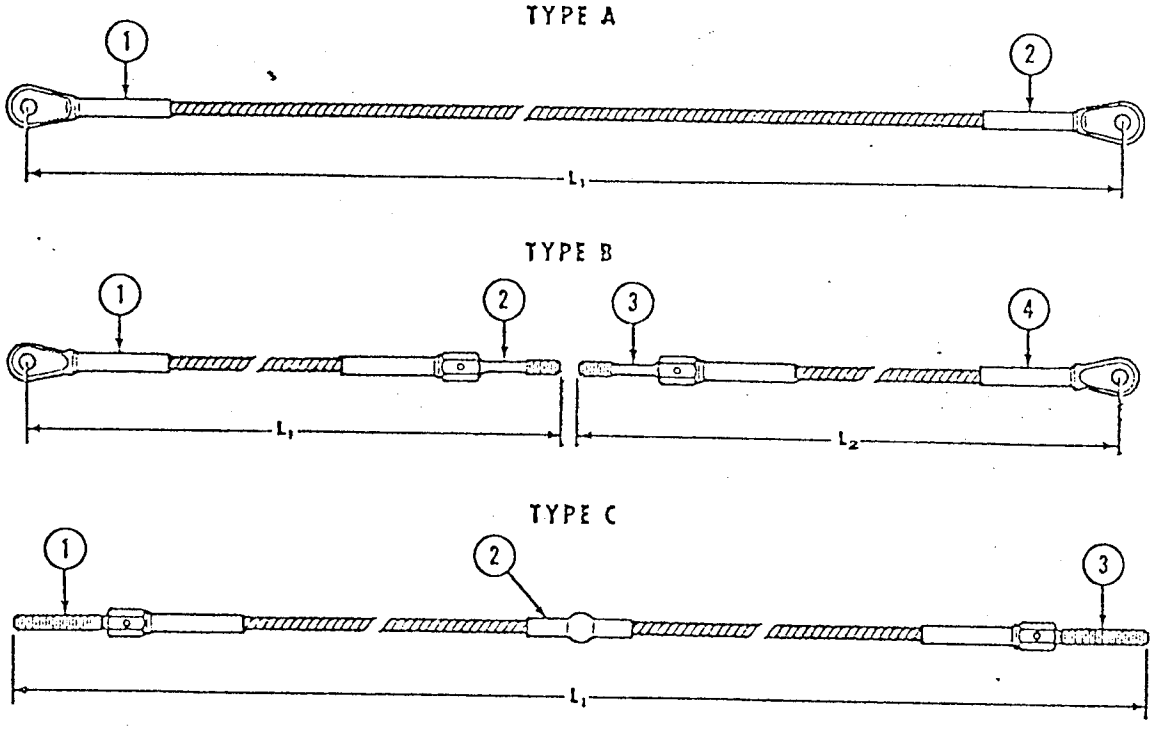

33,670

Figure 4-1. Throttle Control System - Cable Chart and Assemblies (Sheet 2 of 2)

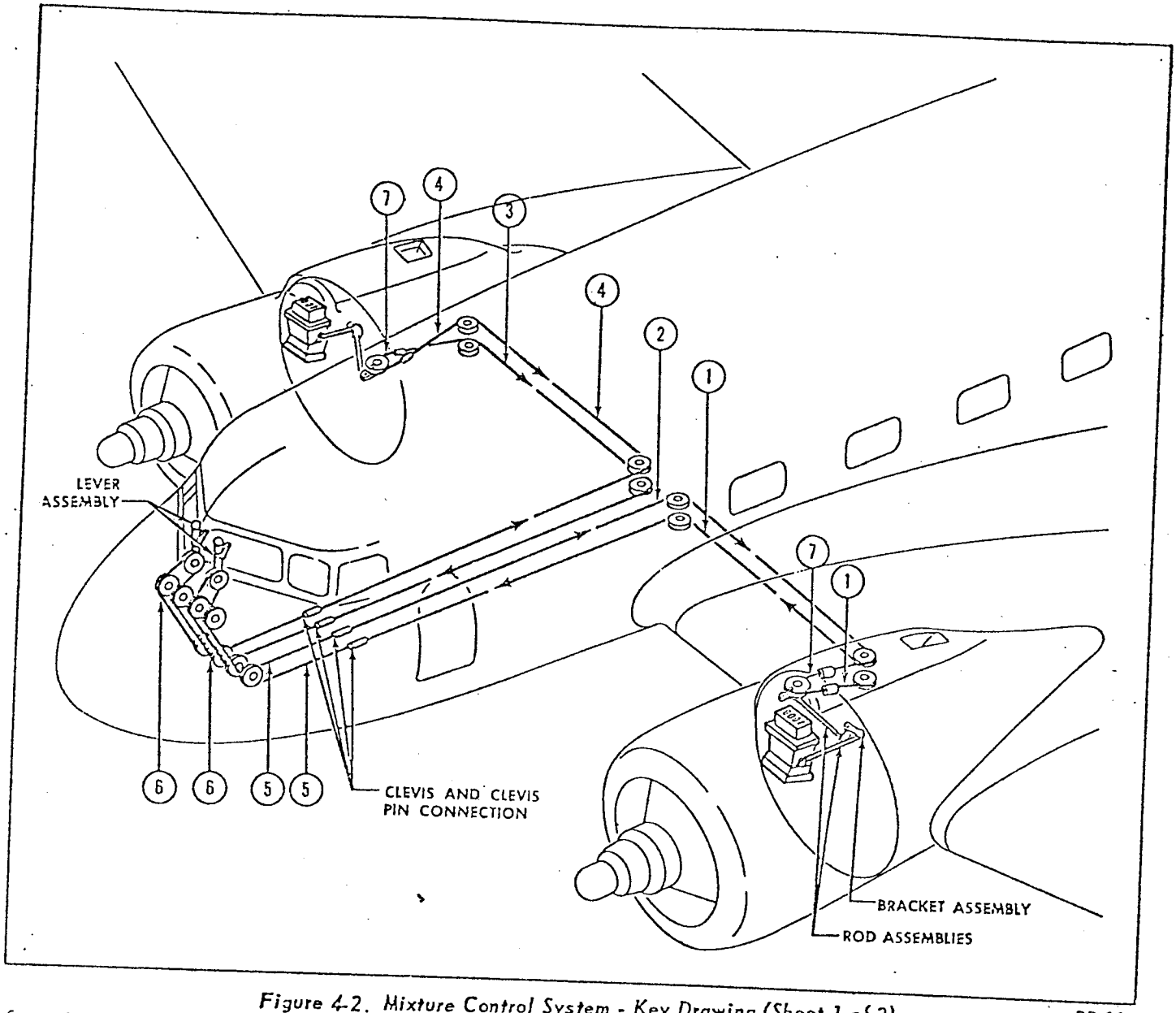

Figure 4-2. Mixture Control System - Key Drawing (Sheet 1 of 2)

33,659

firewall, transmits the cable movement to the controls on the engine. The main cable assemblies consist of a long and short cable connected by a turnbuckle, with the short cable connected to the bellcrank on the firewall. The turnbuckle on each cable is located in the nacelle area.

4-9. Each set of control levers has a locking device which enables the controls to be locked in any position. The throttle levers are located on the quadrant section of the control pedestal, and the knobs are marked with a T. The left lever operates the throttle to the left engine, and the right lever operates the throttle to the right engine. The carburetor mixture controls, located next to the throttle controls, are marked with an M. The carburetor heat controls, consisting of three levers, are mounted at the right side of the engine control pedestal. The carburetor heat control lock lever is marked with an L, and the two carburetor heat control knobs with a C.

Note

Refer to figure 4-7 for proper tensions on all engine control cables.

4-10. THROTTLE CONTROLS. The two throttle levers control the flow of fuel and air mixture from the carburetor to the engine and are mounted on the control pedestal. The throttles are equipped with a friction-type lock to prevent creeping action of the controls. The placarded throttle positions are CLOSE and OPEN, and the range between these positions is for the desired power setting. On airplanes with R-1830-90C/90D engines, a stop is installed on the throttle quadrant of the control pedestal. The stop locates the control levers in full-throttle position for low-blower operation, and should never be exceeded for low-blower operation. Full throttle for the high-blower position, if installed, is accomplished by a slight outboard pressure exerted on both throttle levers while advancing past the low-blower stops.

CABLE REF NO.	DOUGLAS CABLE ASSEMBLY DRAWING NO.	NO. REQD	TYPE	CABLE LENGTH (L_1)	CABLE LENGTH (L_2)	CABLE SIZE	FITTINGS (1)	FITTINGS (2)	FITTINGS (3)	FITTINGS (4)
1	4114029-7	1	A	292	9	3/32 dia 7x7 flex.	2049217 -B-3	2049220 -16DS-3R AN155-16S	2049220 -16DS-3L	1116245
2	4114029-9	1	A	296 1/4	9	3/32 dia 7x7 flex.	2049217 -B-3	2049220 -16DS-3R AN155-16S	2049220 -16DS-3L	1116245
3	4114029-19	1	A	293 5/32	9	3/32 dia 7x7 flex.	2049217 -B-3	2049220 -16DS-3R AN155-16S	2049220 -16DS-3L	1116245
4	4114029-21	1	A	295 1/4	9	3/32 dia 7x7 flex.	2049217 -B-3	2049220 -16DS-3R AN155-16S	2049220 -16DS-3L	1116245
5	4115346-2	2	B	104		3/32 dia 7x7 flex.	S-2049218 -C-3	S-2049218 -C-3		
6	4115347-2	2	B	104		3/32 dia 7x7 flex.	S-2049218 -C-3	S-2049218 -C-3		
7	5355026-16	1	C	23 3/4		3/32 dia	AN666-3L	AN663C3	AN666-3L	

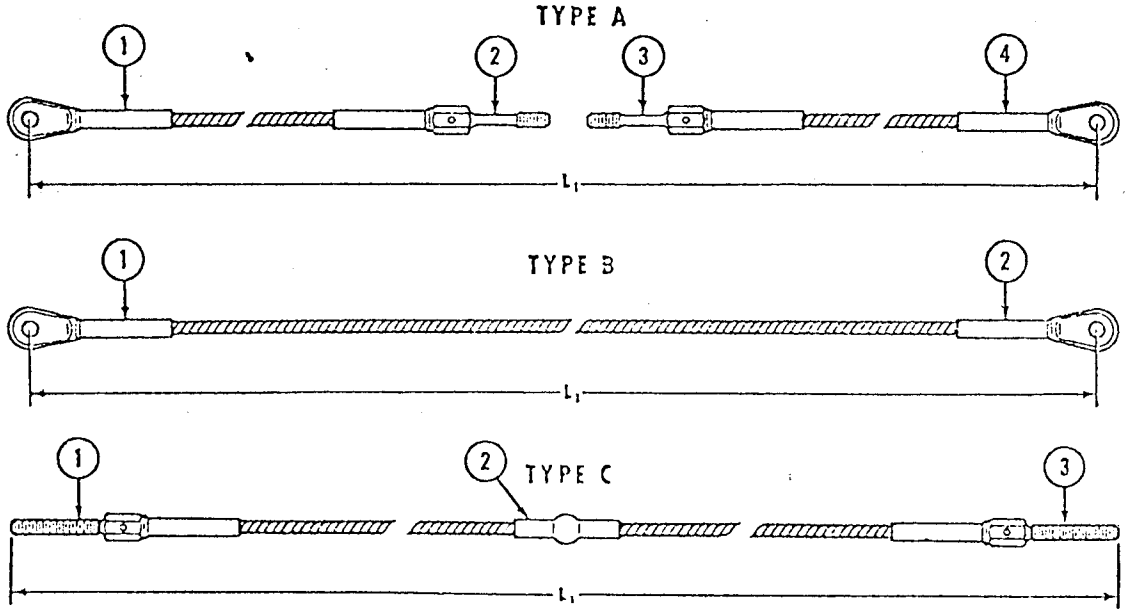

33,668

Figure 4-2. Mixture Control System - Cable Chart and Assemblies (Sheet 2 of 2)

4-11. REMOVAL OF THROTTLE CONTROL.

a. Disconnect the throttle control cables at the turnbuckles located in the nacelle.

b. Remove the first center floor panel aft of the control pedestal.

c. Working through the opening, disconnect the short cable leading to the control pedestal from the main throttle control cable. The cable fittings at this point are clevis and pin connections.

d. Remove the guard pins from the pulley cluster in the center wing, by reaching through the fuel selector valve access holes located at the forward edge of the center wing section to the left and right of the airplane centerline.

e. Slowly pull the throttle control cables through the pulley cluster into the nacelle to prevent chipping the micarta pulleys.

4-12. MAINTENANCE OF THROTTLE CONTROLS.

a. Examine all bearing rod ends for free movement, and replace any damaged rod ends.

b. Inspect and replace any damaged pulleys.

c. Check all cables and replace any cable that shows more than three wires broken in any 1-inch length, or with any broken wires which travel over a pulley.

d. Remove and inspect all attachments that act as axles for moving parts (pulley attach bolts, clevis attach bolts, ect) for wear and corrosion. Replace any damaged parts.

4-13. INSTALLATION OF THROTTLE CONTROL.

a. Carefully insert the throttle control cables into the pulley cluster from the nacelle.

b. Install and secure the guard pins on the pulley cluster in the center wing.

c. Connect the clevis and pin connections on the short cable leading to the control pedestal from the main throttle control cable.

d. Replace the first center floor panel aft of the control pedestal.

e. Connect and secure the throttle control cables at the turnbuckles in the nacelle.

4-14. ADJUSTMENT OF THROTTLE CONTROLS.

a. Two men are required to make the engine control adjustments, one man stationed in the flight compartment to check the position of the control levers and the other man to adjust the push-pull rods at the firewall. All lever adjustments must be at the firewall, the cable tension adjustments at the turnbuckle located in the nacelles, and according to instructions shown in figure 4-7. The man in the flight compartment will indicate which rods are to be shortened or lengthened by checking the throttle control levers.

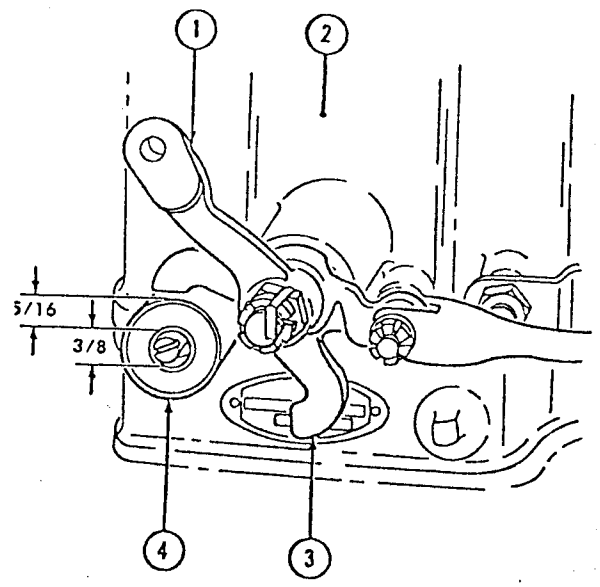

1. Full-throttle Position for Low-Blower Operation.
2. Carburetor.
3. Throttle Control Arm.
4. Adjusting Washer.

V2-39

Figure 4-3. Carburetor Throttle Control Arm

Note

The throttle levers must not be positioned all the way to the control-pedestal frame when in either the OPEN or CLOSED position. A ¾-inch springback allowance at the extreme throttle positions must be provided, and the two control levers must also be aligned until they are exactly even when placed in the OPEN position.

b. Adjust the rods on the firewall by disconnecting the bearing rod ends. Loosen the lock nuts and turn the bearing rod ends to the desired length.

c. Work the throttle control levers on the pedestal and check that the linkage on the carburetor moves through the entire range when the throttle levers are moved from one extreme position to the other.

d. For low-blower operations, adjust the throttle stop using the following procedure:

e. Place the throttle levers on the control pedestal in full-throttle position.

f. Check the carburetor throttle control arms for full-throttle position.

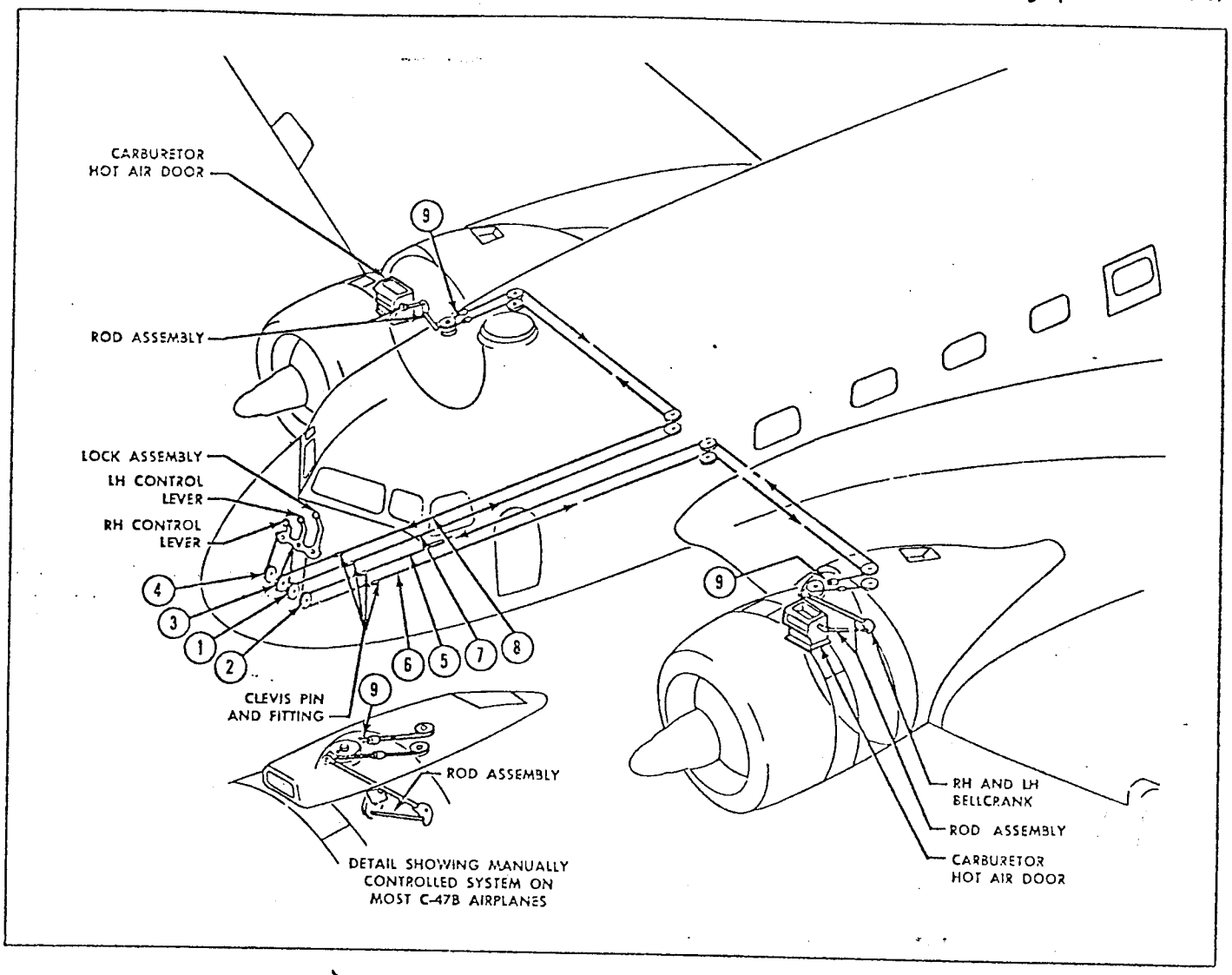

Figure 4-4. Carburetor Air Control System - Key Drawing (Sheet 1 of 2)

33,671

g. Rerig the cables to coordinate the throttle-control arms with the throttle levers on the control pedestal, if necessary.

Note

Step h. thru j. are applicable to R-1830-90C and -90D engines.

h. Place the throttle adjusting washers on the idle speed adjusting stem of the carburetor. (See Figure 4-3).

i. Move the throttle levers until the throttle-control arms contact the adjusting washer.

j. Adjust the stop on the control pedestal until the shoulders rest against both throttle levers.

Note

Remove the washer from the idle speed adjusting stem after the throttle lever adjustments have been completed.

4-15. ENGINE MIXTURE CONTROLS. The proportion of fuel and air charge required by the engine is controlled by the mixture controls. Each control lever located on the control pedestal, has a thumb-operated, catch-type lock to secure it in the selected positions of IDLE CUT-OFF, AUTO-LEAN, AUTO-RICH, and EMERGENCY RICH. The IDLE CUT-OFF position shuts off all fuel flow to the engine, except for priming. The AUTO-LEAN position automatically provides the fuel air ratio required with normal cylinder head temperatures. The AUTO-RICH position is for all power operations and when the cylinder head temperatures are above normal. In the event of automatic carburetor mixture control malfunction, the EMERGENCY RICH position is for obtaining a richer mixture, bypassing the automatic mixture control in the carburetor.

4-16. REMOVAL, MAINTENANCE AND INSTALLATION OF ENGINE MIXTURE CONTROLS. Removal, maintenance, and installation of the engine mixture controls are similar to those described in paragraphs 4-11 through 4-13.

4-17. ADJUSTMENT OF ENGINE MIXTURE CONTROLS. Adjust the link rods on the firewall until the lock catch on the two mixture control levers engages the notch in the AUTO LEAN position at exactly the

CABLE REF NO.	DOUGLAS CABLE ASSEMBLY DRAWING NO.	TYPE	CABLE LENGTH (L_1)	CABLE LENGTH (L_2)	CABLE SIZE	FITTINGS (1)	FITTINGS (2)	FITTINGS (3)	FITTINGS (4)
1	2115277-18	A	31 5/8		3/32 dia 7x7 flex.	1116245	AN667		
2	2115277-20	A	35 3/4		3/32 dia 7x7 flex.	1116245	AN667		
3	2115277-22	A	31 3/8		3/32 dia 7x7 flex.	1116245	AN667		
4	2115277-24	A	35 7/8		3/32 dia 7x7 flex.	1116245	AN667		
5	4114029-3	B	298 1/16	9	3/32 dia 7x7 flex.	S-2049217 -B-3	S-2049220 -16DS-3R AN155-16DS	S-2049220 -16DS-3L	1116425
6	4114029-5	B	293 3/16	9	3/32 dia 7x7 flex.	S-2049217 -B-3	S-2049220 -16DS-3R AN155-16DS	S-2049220 -16DS-3L	1116425
7	4114029-15	B	291 13/16	9	3/32 dia 7x7 flex.	S-2049217 -B-3	S-2049220 -16DS-3R AN155-16DS	S-2049220 -16DS-3L	1116425
8	4114029-17	B	297 5/32	9	3/32 dia	S-2049217 -B-3	S-2049220 -16DS-3R AN155-16DS	S-2049220 -16DS-3L	1116425
9	5355026-14	C	22 1/2		3/32 dia	AN666-3L	AN663C3		

Note:
One cable required each type

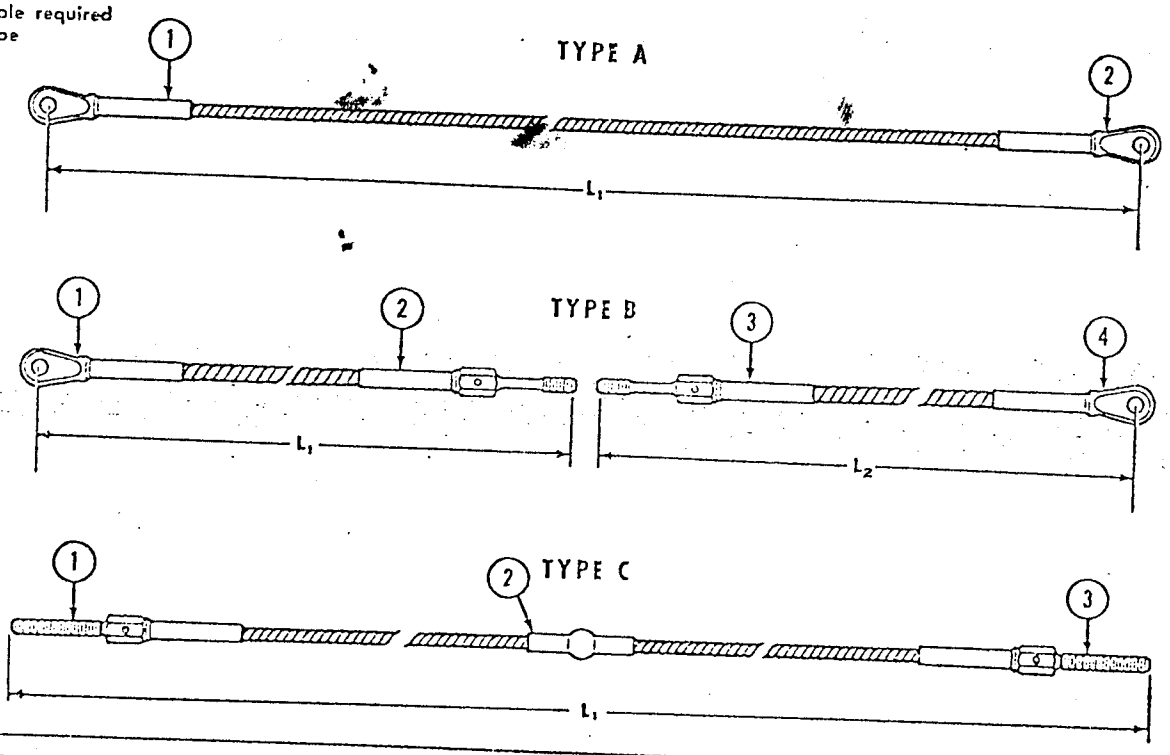

33,672

Figure 4-4. Carburetor Air Control System - Cable Chart and Assemblies (Sheet 2 of 2)

panels.

4-26. INSTALLATION OF COWLING (ANTIDRAG RING).

a. Position the upper section in place.

b. Attach the spring-lock fasteners of the lower panels to the upper section.

c. Close the three antidrag ring latches on the lower surface of the cowling.

4-27. COWL FLAPS. Hydraulically operated cowl flaps *(see figure 4-9)* are attached to the aft edge of the engine cowling. On airplanes with the nonram air induction system, the center flap of the top segment is stationary. On airplanes with a filtered ram-type air induction system, the three flaps in the center of the top segment are fixed. A hydraulic actuating cylinder installed on the lower part of the engine cowling is connected to each movable cowl flap by a series of tie rods and operating levers. Movement of the cylinder, and thus actuation of the flaps, is controlled by left and right engine cowl flap control valves located on the right side of the pilot's compartment. These valves may place the flaps in the CLOSED, OPEN, or TRAIL position, or lock them in any position.

4-28. REMOVAL OF COWL FLAPS.

a. Remove the engine cowling (antidrag ring) as described in paragraph 4-25.

b. Remove the nuts from the bolts on the flap base bracket on the engine cowling rear channel.

c. Remove the axle or hinge bolt and remove the flap.

Note

The center flap of the top segment is not removable.

4-29. INSTALLATION OF COWL FLAPS.

a. Place the flap in position and install the hinge bolt.

b. Install the bolt on the flap base bracket on the engine cowling rear channel.

Note

Be sure that the leather flaps on the inside of the engine cowling ring are forward of the diaphragm.

c. Install the engine cowling (antidrag ring).

4-30. ADJUSTMENT OF COWL FLAPS.

a. When in the CLOSED position, the cowl flaps should follow the contour of the engine cowling.

b. If adjustment is necessary to bring any one flap to this position, loosen the jamnuts at both ends of the connecting rods on either side of the flap brackets and shorten or lengthen the rods equally as necessary.

c. Tighten all jamnuts.

d. In the closed position all flaps should be equidistant from the accessory cowling. The perferred distance is 1 ($\pm 1/4$) inch.

e. If all the flaps are adjusted too far closed or too far opened, disconnect the clevis pins on either side of the actuating cylinder and adjust equally.

Note

If the clevis is shortened on one side, the other side should be lengthened an equal amount.

4-31. ENGINE MOUNT. *(See figures 4-10 and 4-11.)* The engine mount is the connecting link between the engine and the airplane structure. It is an assembly consisting of a steel forging, or a tubular steel ring, with eight supporting tubes extending aft and welded together into a rigid structure. The engine is bolted to the forging or tubular ring at eight points through rubber bushings. Four fittings on the aft ends of the mount support tubes are aligned with lugs on the face of the nacelle and bolted together. The engine-to-engine mount attach bolts are torqued to $250 \pm {}^{25}_{0}$ inch-pounds, and the engine mount-to-firewall attach bolts are torqued to 125 (± 15) inch-pounds and safetied. Bolts securing forging-ring halves, or tube-to-forging ring-halves, are torqued to 400 ($+40, -0$) inch-pounds. Removal and installation of the engine mount is described in the Power Plant Buildup procedures (see paragraph 4-271).

4-32. ENGINE *(See figures 4-12 through 4-14.)* The Pratt and Whitney Twin Wasp, C series, R-1830 engine is a 2-row radial air-cooled engine having a displacement of 1830 cubic inches. The major assembly groups of the power plant engine, from the front to the rear, are the front section and the rear section. The front section of the engine consists of the reduction drive gear housing assembly, the propeller shaft, propeller shaft bearings, reduction gearing, and the front oil pump. The crankcase section consists of vibration controls, reduction-drive bearing support assembly, crankcase assembly, crankshaft assembly, master-rod assemblies, cam mechanisms, valve mechanism, valves, cylinders, and cylinder deflectors. The rear section contains the supercharger (blower) section, intermediate rear case, rear case, accessory drive shaft, generator and vacuum drive gears, and magneto drive

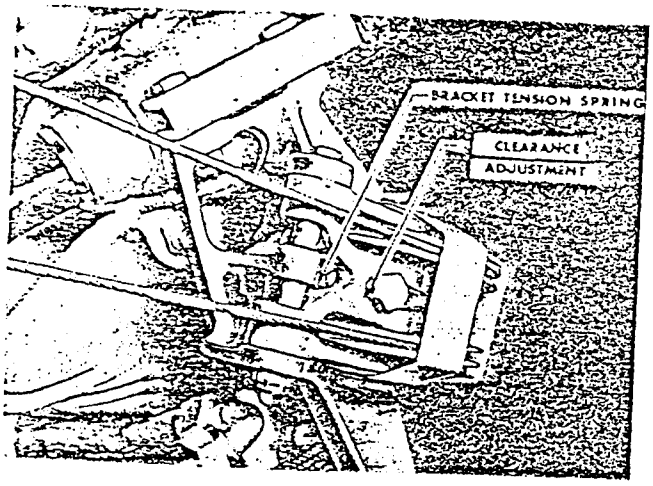

M-2

Figure 4-6. Propeller Control Engine Bracket

gears. The lubrication system oil flow throughout the power plant is controlled by the oil pump, oil controls, and the scavenge system. Carburetion, ignition, and propeller shaft operations complete the power plant. The related systems such as starting, generating, hydraulic, vacuum, and de-icing pressure are relevant to the power plant only as a source of power.

4-33. The following definitions form the basis for all directional references in this manual: The propeller end of the engine will be referred to as the front of the engine. The sides of the engine will be considered left and right, as viewed from the rear. The normal direction of rotation of the propeller shaft and the crankshaft is clockwise, as viewed from the rear of the engine. The terms clockwise and counterclockwise are applied to the direction of rotation of any accessory drive from a position facing the drive. Engines mounted in the aft position are referred to as engine No. 1 left side, and engine No. 2 right side.

4-34. The cylinders on the engine are numbered consecutively in clockwise sequence as viewed from the rear of the engine. The top cylinder in the rear row is the No. 1 cylinder, and the bottom cylinder in the front row is the No. 8 cylinder when the engine is in the horizontal (flight) position. The rear row cylinders are designated by odd numbers, and the front row cylinders by even numbers *(figure 4-14.)*

4-35. ENGINE CONFIGURATIONS. Pratt and Whitney Twin Wasp R-1830 engines are used on all C-47 and C-117 airplanes, with variations of engine modifications accounting for the alphabetical designations with each airplane series. Specifically, the airplane and engine configurations are identified in the following manner:

Airplane Designation	*Engine Designation*
C-47	R-1830-92
C-47A	R-1830-92
C-47B	R-1830-90C
C-47D	R-1830-90D
C-117A	R-1830-90C
C-117B	R-1830-90D
C-117C	R-1830-92

The R-1830-92 engines incorporate single-speed gear-drive ratio blowers with the carburetor adapter mounting pad slanted aft. The R-1830-90C engines contain 2-speed blowers with the carburetor adapter mounting pad horizontal. The R-1830-90D engines are C engines modified to provide a fixed blower ratio. R-1830-92 engines are to be replaced with like engines only. The R-1830-90C can be replaced with R-1830-90D engines either singly or in pairs, but on airplanes with only one R-1830-90C engine installed, the clutch must be locked in the low-blower position. The C-47B and C-117A airplanes having one or more R-1830-90D engines installed will be redesignated C-47D and C-117B respectively. The engines are installed on mounts on the forward face of the firewall and are covered by engine cowling. Fuel is metered by a Bendix-Stromberg injection-type carburetor, and engine-driven accessories are mounted on the engine rear section. Ignition is performed by either two Scintilla magnetos or two Bosch magnetos (early engines), located on the engine rear case. The ignition harness and spark plugs are shielded to prevent interference with radio communication. Cables connect operating levers in the flight compartment with control units on the engines to govern carburetor mixture, throttle, and carburetor air positions. Control of the 2-speed supercharger (blowers), installed on some airplanes, is hydraulically effected.

4-36. Where lockwire and cotter pins are removed during the following procedures, new lockwire and cotter pins must be installed after assembly. New gaskets and packing must be used. Fiber nuts may be continued in service as long as they are free from mutilation and provide an effective lock. Rubber oil-seal rings may be reused if they are in good condition. The surfaces of all engine parts that are subject to friction shall be coated with oil or other suitable lubricants prior to their assembly on the engine.

Note

When installing parts that are secured by bolts, make certain that the insert holes are thoroughly cleaned.

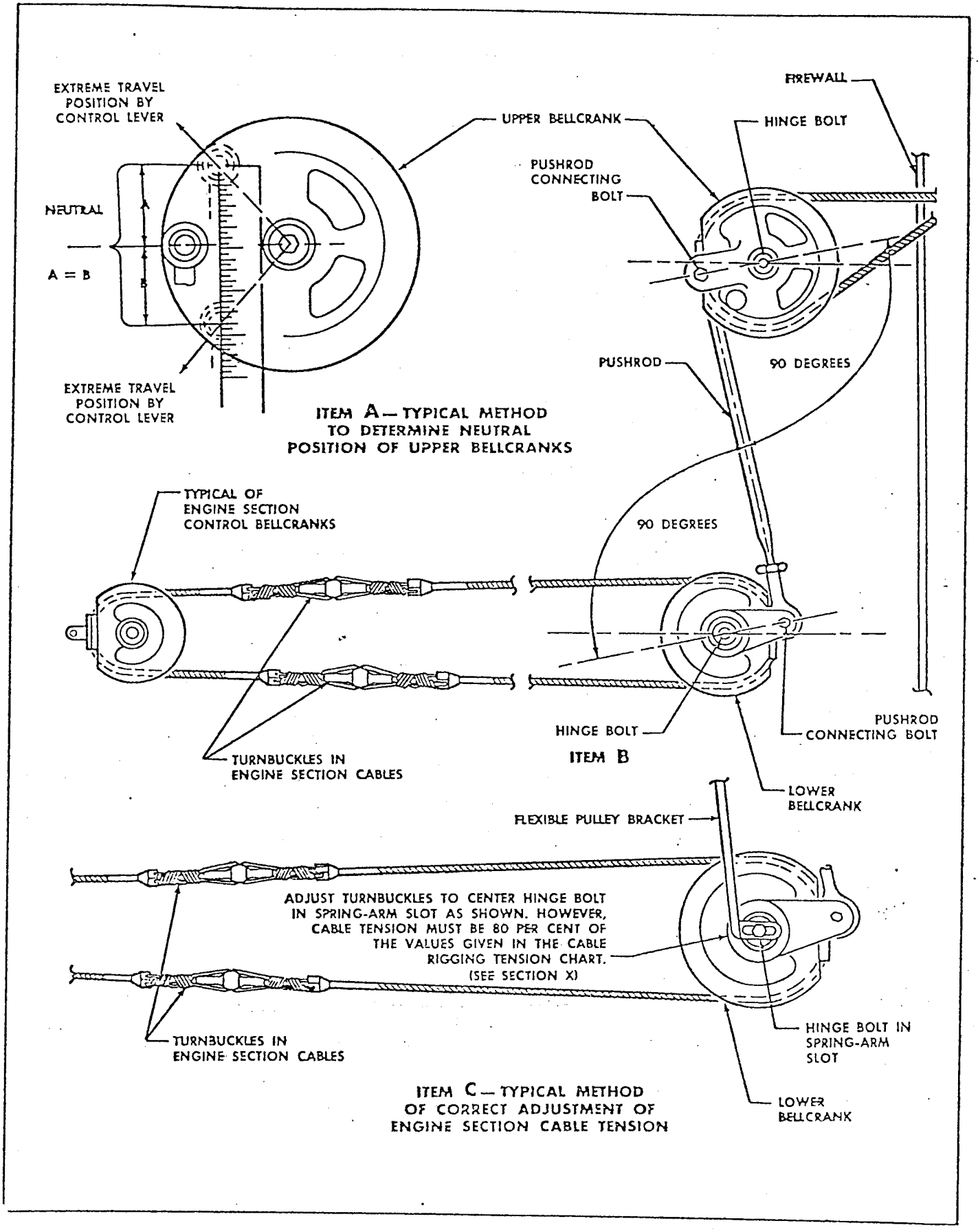

Figure 4-7. Rigging Engine Section Controls

33.676

Take care to prevent dirt, dust, and other foreign matter from entering the engine during assembly and disassembly operations. Use suitable plugs and coverings over all openings of the engine.

4-37. ENGINE INTERCHANGING. The only difference between the C-47 and C-47A power plants is in the electrical system. Remove the plugs, conduit, and the electrical boxes from the power plant, regardless of the model. When removing the booster coil (C-47 airplane) or the induction vibrator (C-47A airplane) from either engine, remove the mounting attachment securing these units to the engine-mount truss. When removing the starter, the handcranking and hand-meshing equipment must be completely removed. The temperature resistance bulbs, the tachometer, the propeller feathering pressure cutout switch, and the engine thermocouple connections are identical on both models; therefore, remove the connections only and do not interchange or remove the units.

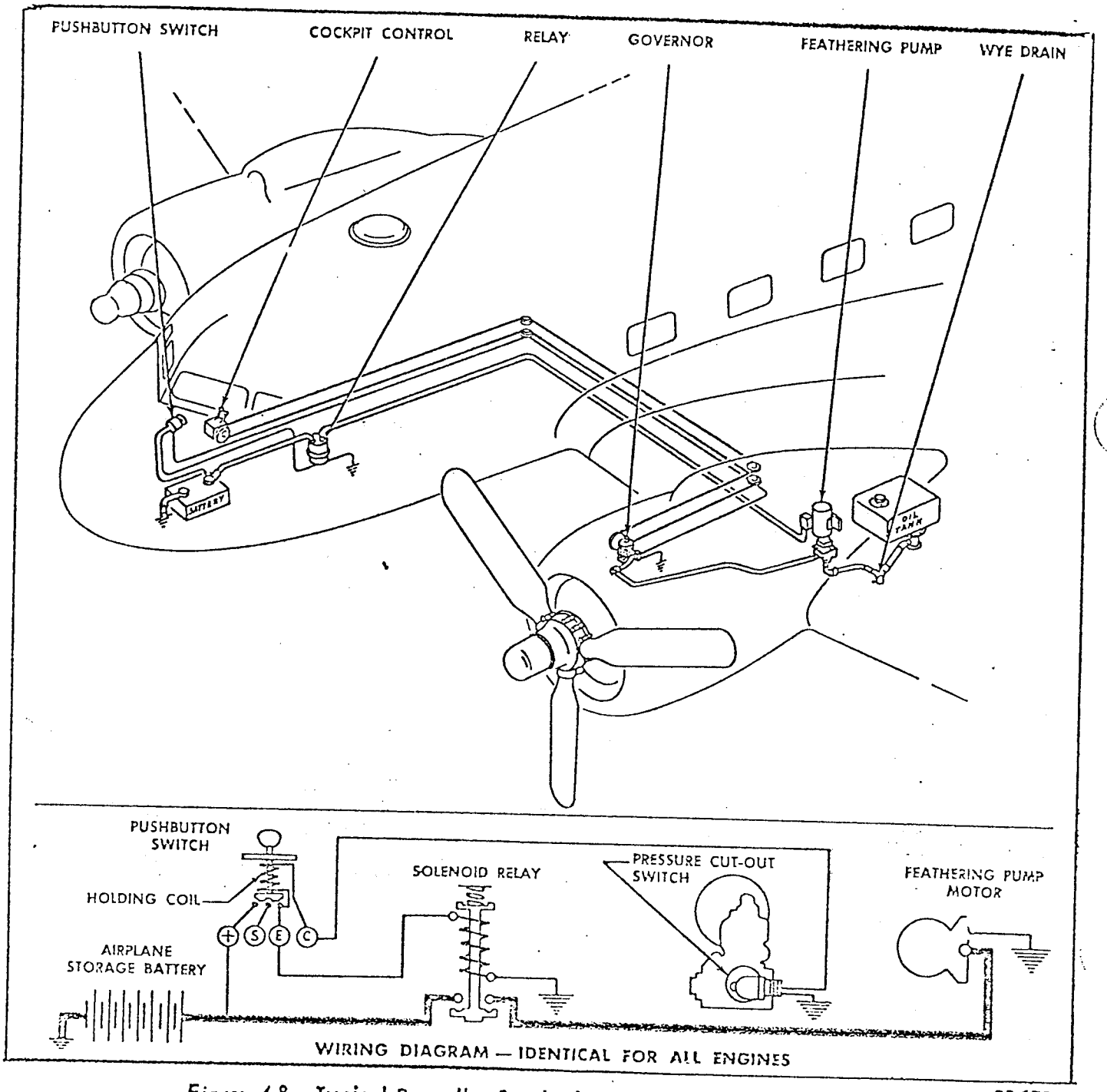

Figure 4-8. Typical Propeller Feathering Accessories Installation

33,678

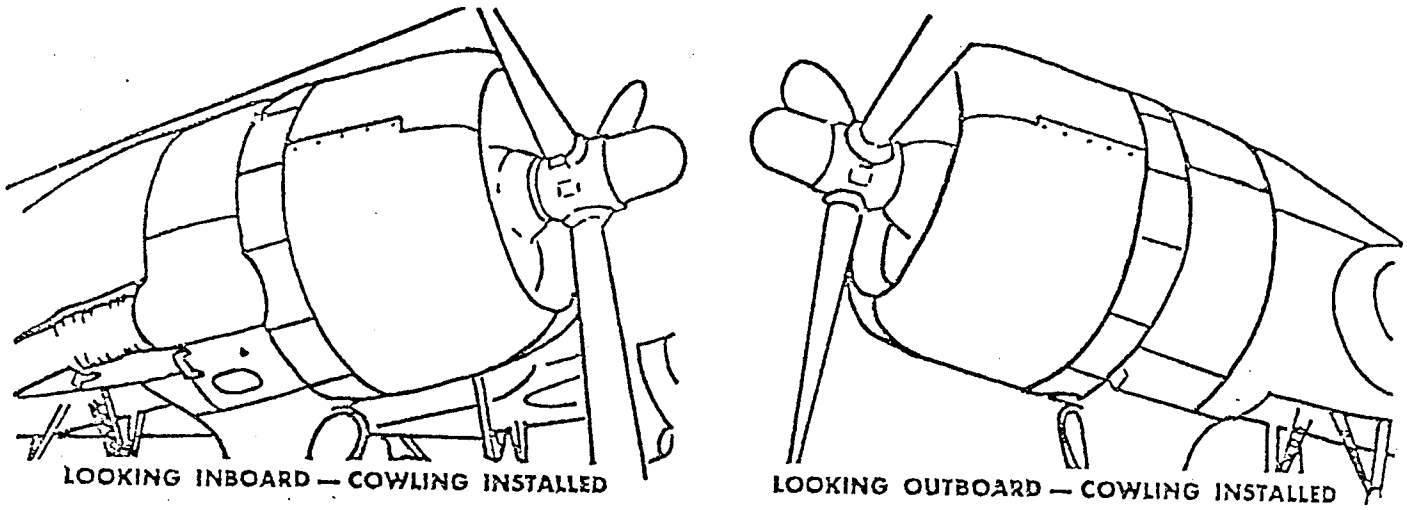

Figure 4-9. Engine Cowling and Cowl Flaps (Sheet 1 of 3)

33,567

Key to Figure 4-9. (Sheet 2 of 3)

Item	*Nomenclature*	*Item*	*Nomenclature*
1.	Coupling Assembly	8.	Bracket
2.	Cowl Flap Assembly	9.	Link, Bolt, Spacer, and Pin
3.	Antidrag Ring Segment	10.	Toggle
4.	Fork End	11.	Bracket
5.	Cowl Flap Actuating Cylinder	12.	Bolt and Nut
6.	Actuating Linkage	13.	Link and Nut
7.	Tie Rod	14.	Hook and Eye

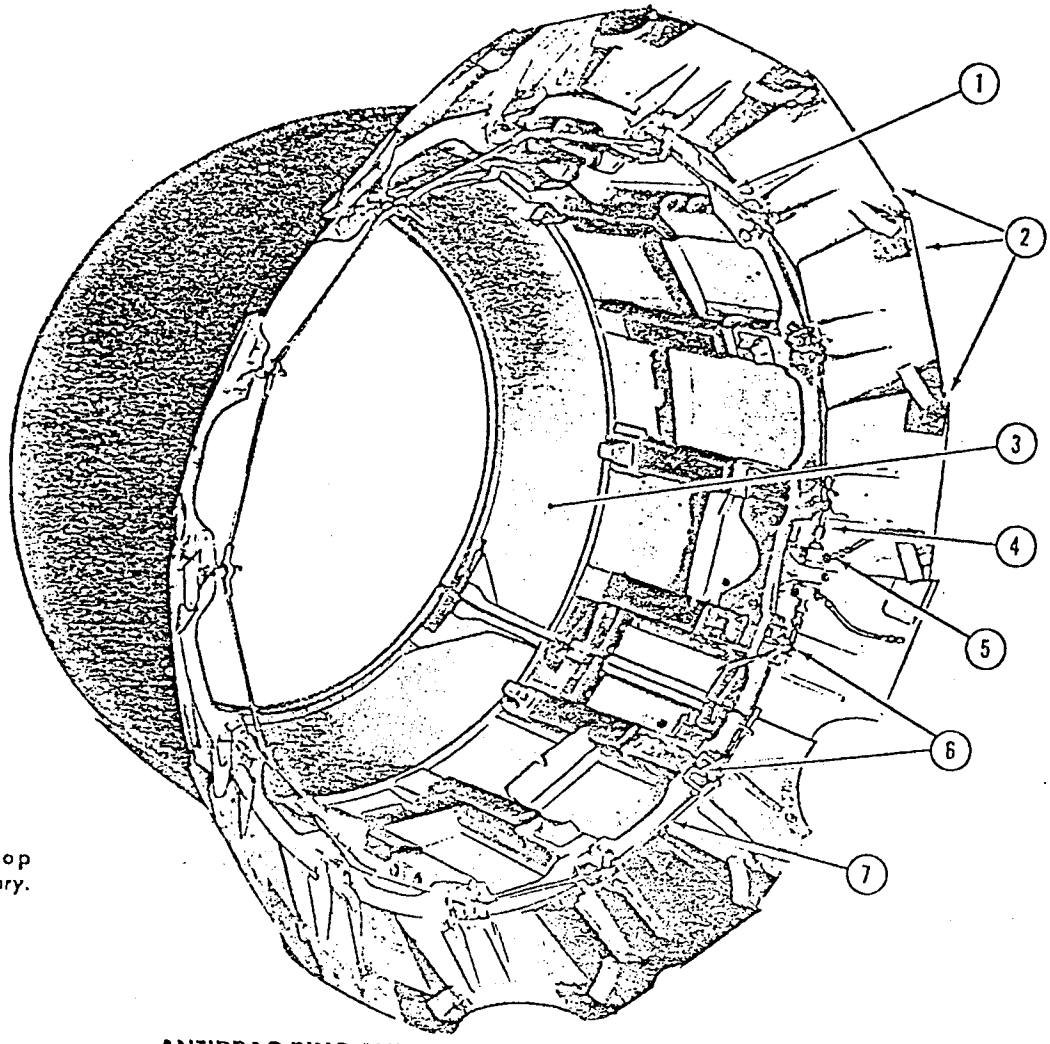

Note:

Center flap of top segment is stationary.

ANTIDRAG RING AND COWL FLAPS — C-117 AIRPLANES

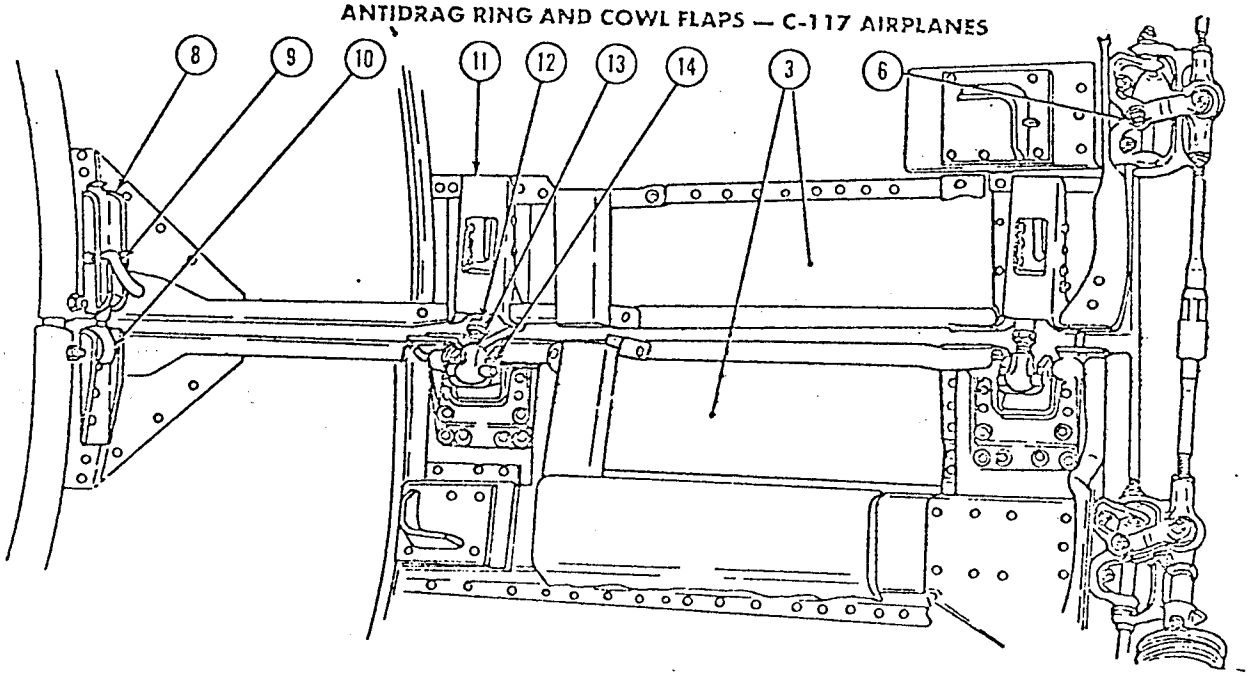

33.565

Figure 4-9. Engine Cowling and Cowl Flaps (Sheet 2 of 3)

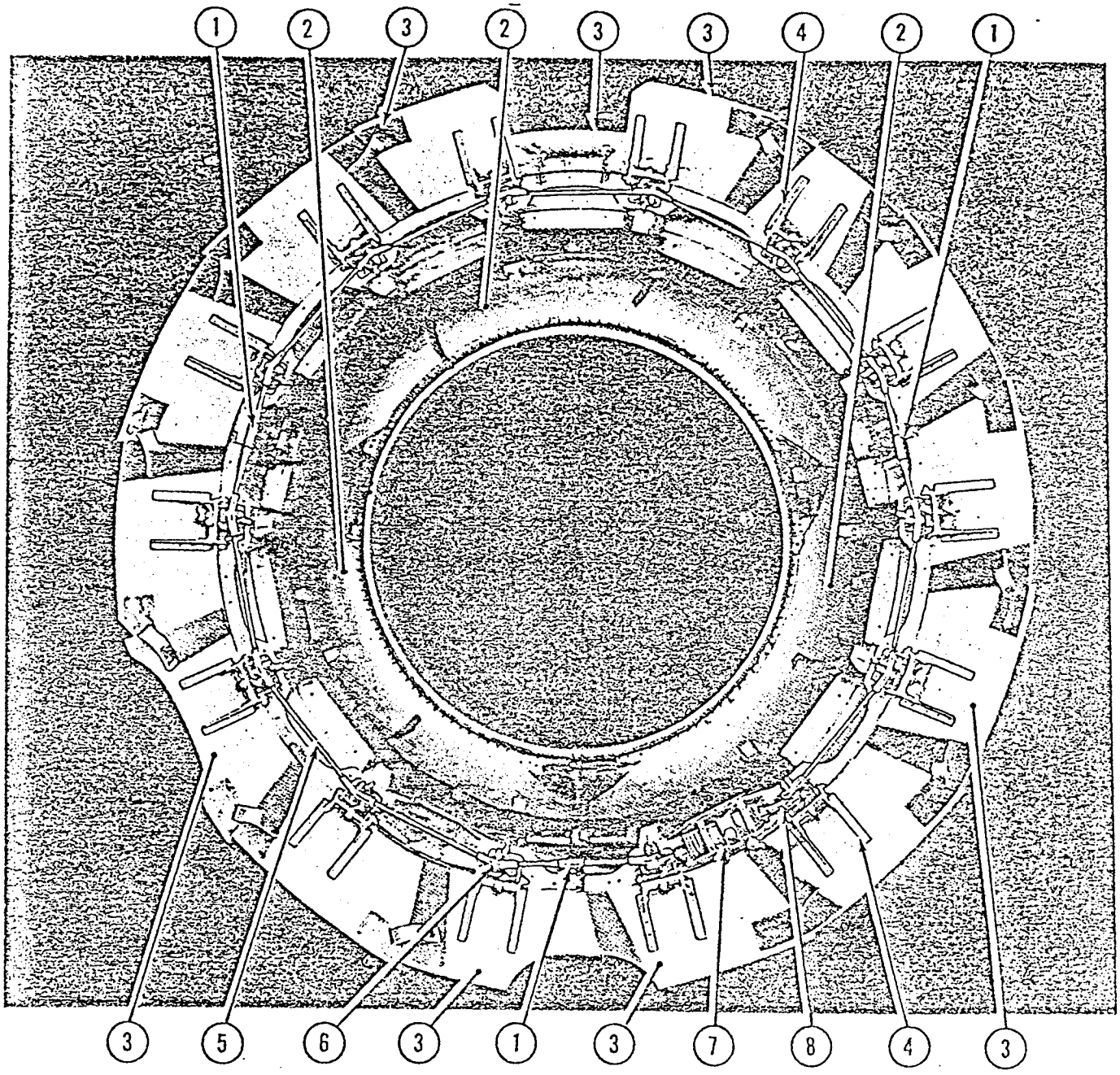

Figure 4-9. Engine Cowling and Cowl Flaps (Sheet 3 of 3)

33,566

Key to Figure 4-9. (Sheet 3 of 3)

Item	Nomenclature	Item	Nomenclature
1.	Coupling Assembly	5.	Tie Rod
2.	Antidrag Ring Segment	6.	Actuating Linkage
3.	Cowl Flap Assembly	7.	Cowl Flap Actuating Cylinder
4.	Cowl Flap and Ring Support	8.	Fork End

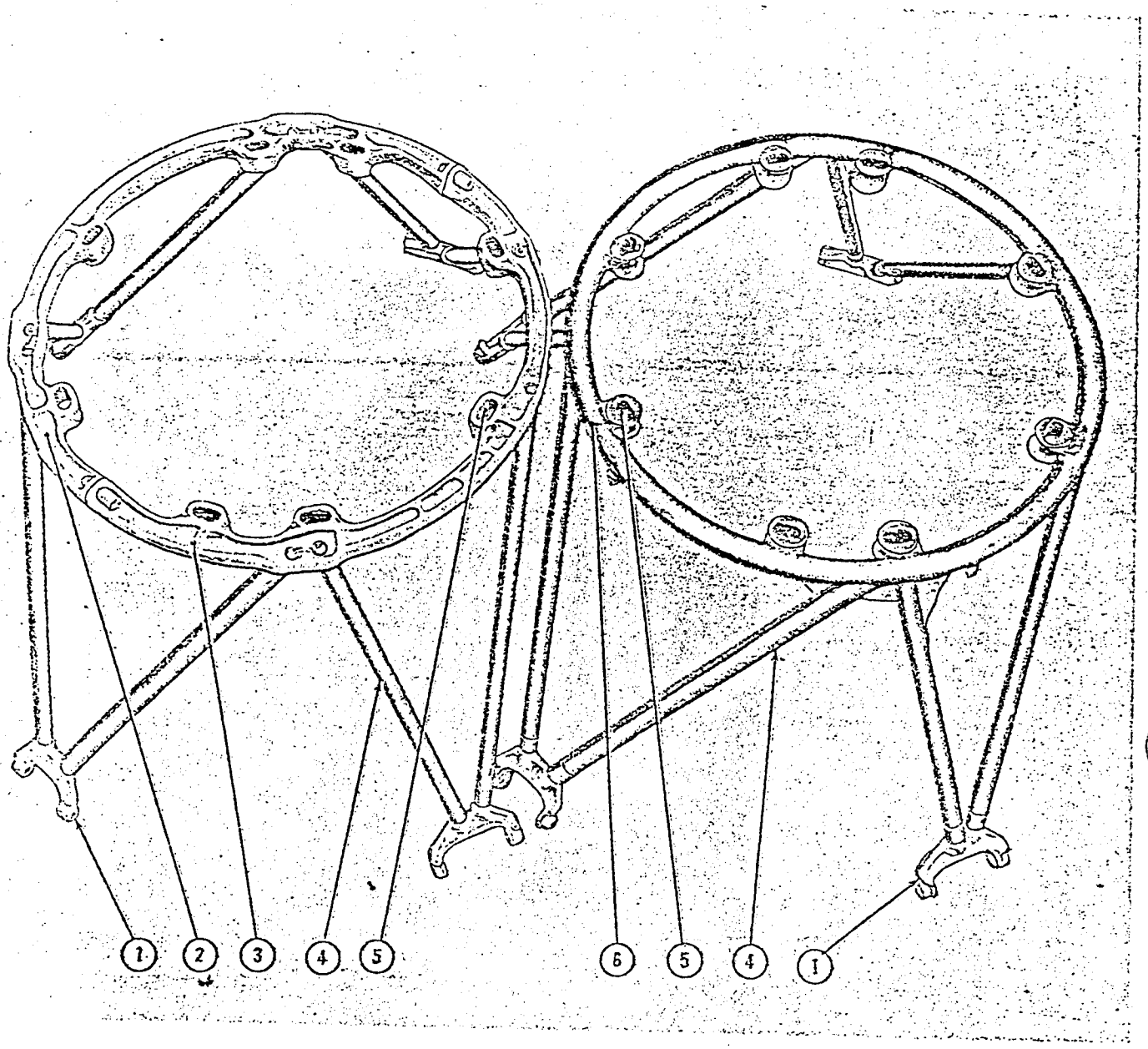

Figure 4-10. Engine Mount 33,554

Key to Figure 4-10.

Item	*Nomenclature*	*Item*	*Nomenclature*
1.	Engine Mount-to-Firewall Fitting Assembly	4.	Tube Assembly
2.	Ring Assembly (lower half)	5.	Engine-to-Engine Mount Attach Fitting and Shock Bushing
3.	Ring Assembly (upper half)	6.	Welded-Type Mount Assembly

a. Disconnect the starter plug, generator plug, ignition plug, and the engine electrical instrument plug at the firewall.

b. Unfasten all clamps which secure the accessory section electrical conduit to the engine accessory section.

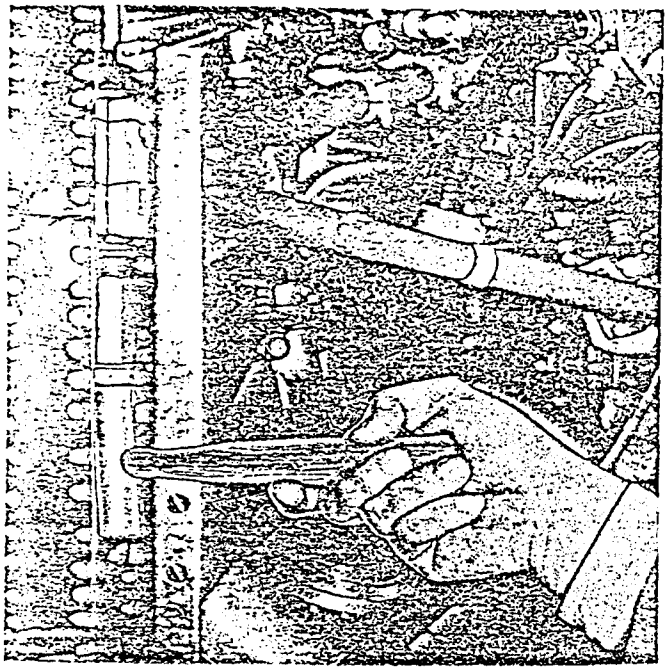

33,613

Figure 4-11. Engine Mounting Bolt Installation

c. Disconnect the conduit from the magnetos.

d. Remove the starter and the generator from the engine.

e. Remove the friction tape and unfasten the thermocouple connections from cylinder No. 1 (right side) and cylinder No. 13 (left side). Pull the wires through the engine diaphragm.

f. Disconnect the propeller feathering pressure cutout switch wire (No. SR 22 LH or No. SR 11 RH) at the spliced connection inside the engine section pull box (see Section VIII). Uncouple the conduit at the pull box and allow this conduit to remain attached to the engine diaphragm.

g. Disconnect the plugs from the carburetor air and oil-temperature resistance bulbs, and the tachometer generators.

h. Remove all conduit clamps and the induction vibrator or booster coil with its mounting. Remove the complete engine electrical section distribution harness, and the engine is ready to be removed.

Note

Electrical equipment disconnected or removed from the engine must remain with the airplane. When the interchanged engine is secured to the airplane, again install only the electrical distribution harness, starter, and generator, and make the necessary plug connections. DO NOT attempt to interchange 12- and 24-volt equipped power plants if a properly equipped spare power plant is available.

4-38. ENGINE PUSHRODS. Tappets actuate the valve rocker arms through tubular aluminum-alloy pushrods. The pushrods have hardened steel-ball ends which fit into hardened steel sockets in both the tappets and the rocker arm. The rods are protected by removable oiltight cover tubes which are held in place at both ends by packing and gland nuts.

4-39. REMOVAL OF ENGINE PUSHROD.

a. Remove any cowling necessary to make the part accessible.

b. Loosen the pushrod cover nut at the cylinder end first.

c. Loosen and remove the rocker box cover.

d. Turn the propeller shaft until the piston in the cylinder, from which the pushrod is to be removed, is at the top of its compression stroke (both valves closed).

e. Depress the rocker with a PWA-455 depressor and remove the pushrods and cover tubes.

f. Place a PWA-4885 protector over the tappet guide to protect the tappet guide threads from damage.

4-40. MAINTENANCE OF ENGINE PUSHROD.

a. Examine the rods for roundness and straightness by checking with a V-block and indicator. The pushrods should be straight and round within 0.010 FIR. Replace any rod not within these limits; do not attempt to straighten a pushrod.

b. Replace ball ends which are loose or excessively worn, using a PWA-4877 puller. A clear ringing sound when a pushrod is dropped on a bench indicates that the ball ends are tight.

c. Check for cracks and note that the oil holes in the ball ends are free of any obstruction.

d. Examine pushrod covers for cracks and dents, and check the condition of the paint.

e. Examine the nuts for thread and wrench slot conditions.

f. Replace the cover tube if any of the steel ferrules in the ends of the pushrod cover tubes become loose.

g. Inspect the pushrod packing nuts for evidence of oil leakage. Do not attempt to tighten the packing nuts after the packing has seated and adhered to the housing, as further tightening will damage the packing. If oil is leaking at the packing nut, replace the packing as described in paragraph 4-41.

4-41. INSTALLATION OF ENGINE PUSHROD. Before installing a pushrod and cover, apply a thin

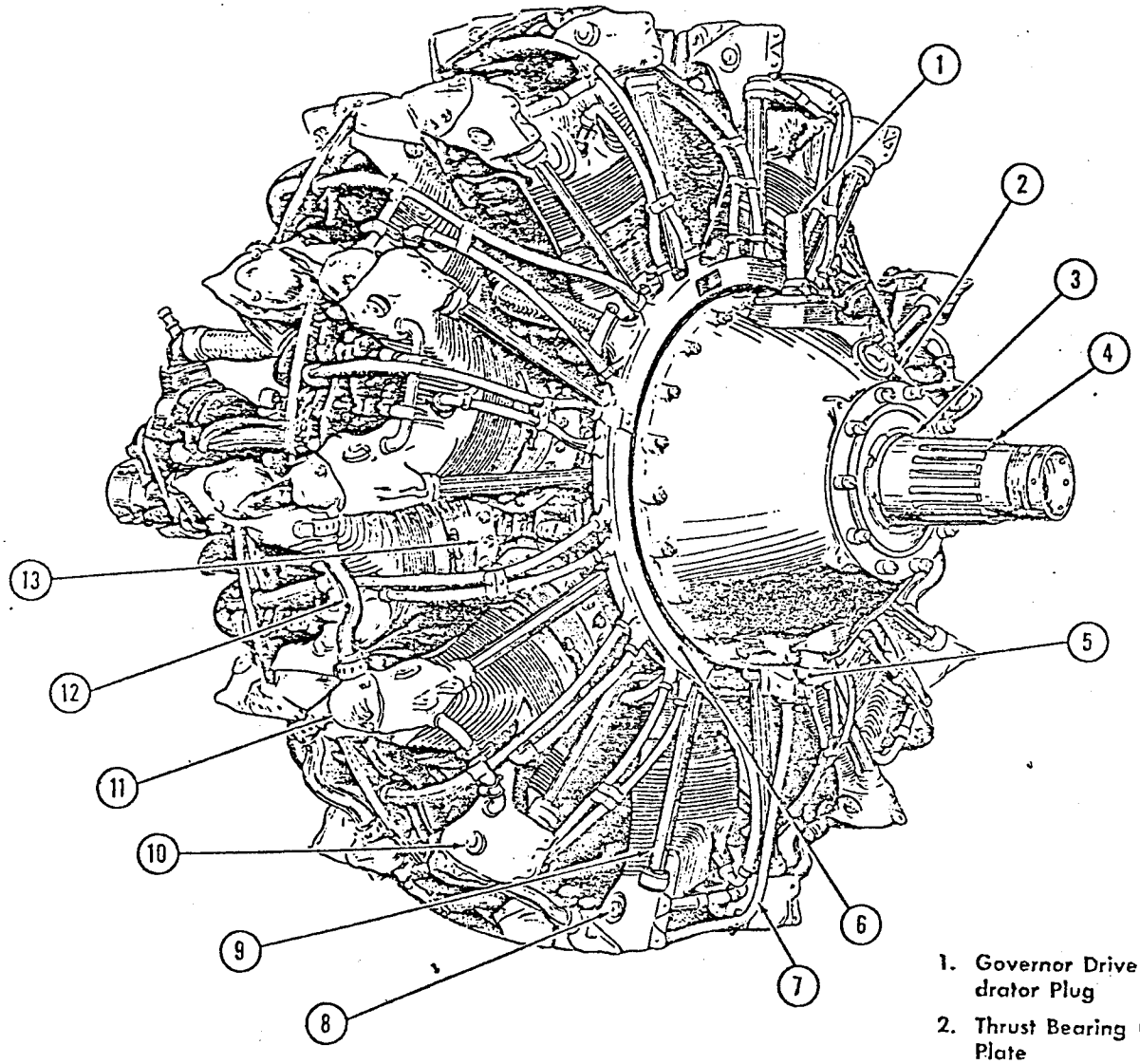

1. Governor Drive Dehydrator Plug
2. Thrust Bearing Cover Plate
3. Thrust Bearing Nut.
4. SAE No. 50 Propeller Shaft Spline
5. Front Section Scavenge Oil Return
6. Ignition Manifold
7. Rocker Oil Suction Tube
8. Rocker Shaft
9. Pushrod Cover Tube
10. Rocker Shaft Cap
11. Rocker Box Cap
12. Rocker Drain Tube
13. Cylinder Flange Nuts

RIGHT FRONT VIEW OF ENGINE

33,581

Figure 4-12. Engine Section (Sheet 1 of 8)

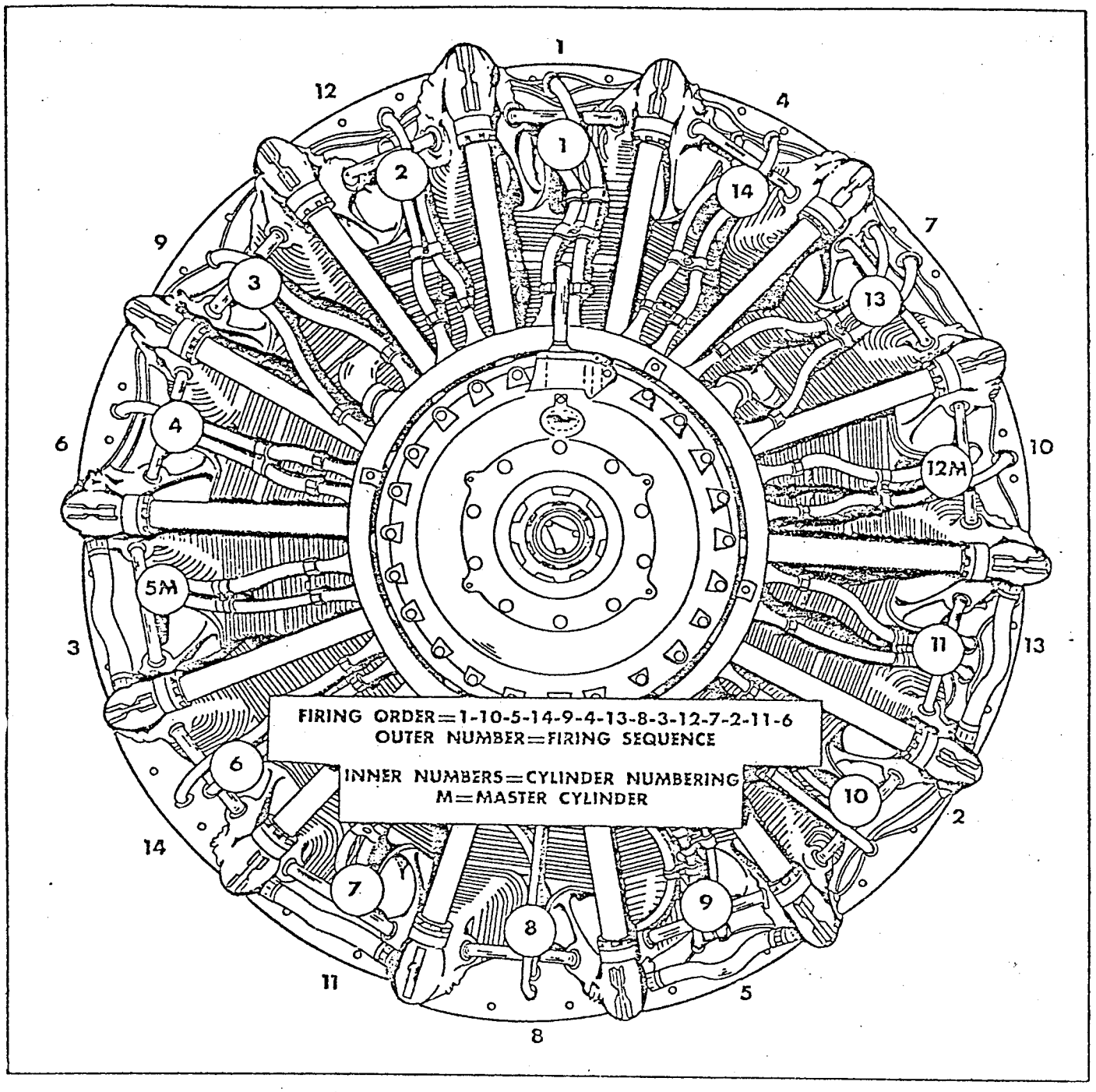

Figure 4-14. Engine Cylinder Numbering and Firing Order

33,589

even coat of insulating compound, Specification MIL-I-8660, to the oil-seal packing rings.

CAUTION

DO NOT reverse the following sequence of operations as the packing on the tappet guide end may be pushed into the tappet compartment and be damaged during engine operation.

a. Install the packing rings in place in each gland nut.

b. Remove the tappet guide thread protector(s).

c. Assemble the pushrod and cover assembly with the marked end of the pushrod and the flared end of the cover tube toward the crankcase.

d. Depress each rocker with a PWA-455 depressor, and fit the corresponding pushrod and cover into position.

e. If the valve tappet protrudes too far to allow installation of its pushrod, turn the propeller until the tappet has receded sufficiently to permit installation.

f. After the pushrod and cover assembly are in place on the engine with the gland nuts secured fingertight, push the cover tube firmly against its seat on the tappet guide. Turn down the gland nut and torque to 125 to 150 inch-pounds, using a PWA-5630 wrench and a torque wrench.

g. Tighten the gland nut on the cylinder head end of the cover tube and torque to 125 to 150 inch-pounds.

4-42. ENGINE INTAKE PIPES. *(See figure 4-12.)* Fourteen steel intake pipes are connected by packing nuts to the outlet ports of the blower case and to the inlet ports of the cylinders.

4-43. REMOVAL OF ENGINE INTAKE PIPES.

CAUTION

Intake pipes are constructed of thin-gage metal and are easily dented and damaged.

a. Loosen the gland nut at the cylinder end, loosen the nut at the blower end, and remove the intake pipe.

b. Install the protector in the intake pipe coupling.

4-44. INSPECTION OF ENGINE INTAKE PIPES.

a. Inspect for dents and cracks, and check the condition of the paint.

b. Examine the nuts for thread and wrench slot conditions, and replace the packing if it is in poor condition.

Note

Intake pipe couplings of early cylinders are metalized. Visually check the intake pipe packing nuts for evidence of leaking. If the packing is found to be leaking, do not attempt further tightening; replace the packing.

4-45. INSTALLATION OF ENGINE INTAKE PIPE.

a. Install a flat rubber seal at the blower end, a small rubber seal and a flat rubber seal at the cylinder end of the intake pipe after first applying a coating of insulating compound, Specification MIL-I-8660.

b. Remove the intake pipe coupling protector.

c. Position the intake pipe on the engine; install the blower end of the pipe first, and then the cylinder end.

d. Handtighten the nuts; secure the cylinder end first, using a PWA-144 wrench, and then the blower end, using a PWA-5072 wrench. Torque both gland nuts to 650 to 750 inch pounds.

4-46. ENGINE ROCKER ARMS AND COVERS. *(S figure 4-12.)* Each of the two rocker housings on t cylinder heads contains two concentric valve springs and a valve rocker arm. Each pair of valve springs is secured to its valve stem by a split cone and washer. The exhaust and inlet valve springs are interchangeable and can be withdrawn from the housings without removing the rocker arms. Saftey circlets are fitted on the valve stems to prevent valves from dropping into the cylinders when the split cones are being removed or installed. Each rocker arm is supported on a shaft by double-row ball bearings and contains a valve-clearance adjustment screw. Drilled passages in each rocker arm direct pressure oil to the ball bearings and the valve-adjusting screw. Rocker box covers are secured by studs and elastic stop nuts to the tops of the rocker housing. Oil drainpipes connect the two rocker boxes of the cylinders located below the horizontal centerline of the engine.

4-47. REMOVAL OF ENGINE ROCKER ARM AND COVER.

a. Remove the elastic stop nuts from the rocker box cover.

b. Remove the pushrod.

c. Unscrew the cap and lift the copper gasket from the bushing which supports the inner end of the rocker-arm shaft.

d. Remove the cotter pin and unscrew the nut from the opposite side of the shaft.

e. On cylinder No. 8, remove the nut from the inner bushing and remove the insert from the end of the rocker-arm shaft.

f. Drive the shaft out of the rocker box by using a suitable drift and hammer. The rocker arm will fall free inside.

4-48. MAINTENANCE OF ENGINE ROCKER ARMS AND COVERS.

a. Remove the binding and inspect the ball bearings if any binding is present which prevents a rocker arm from moving freely. Clearance between the rocker shaft bushings and the side of the rocker arm must not exceed 0.015 inch.

b. Check the valve-adjusting screw assemblies for burred threads. Inspect the half ball for wear, looseness in its socket, nicks, or a pitted condition. Inspect the screws for cracks.

c. Exercise special care when installing the rocker box covers to avoid damaging the gaskets. Replace all gaskets. Remove all evidence of oil, grease, gasoline, and sealing compounds from the cylinder before the gaskets are installed.

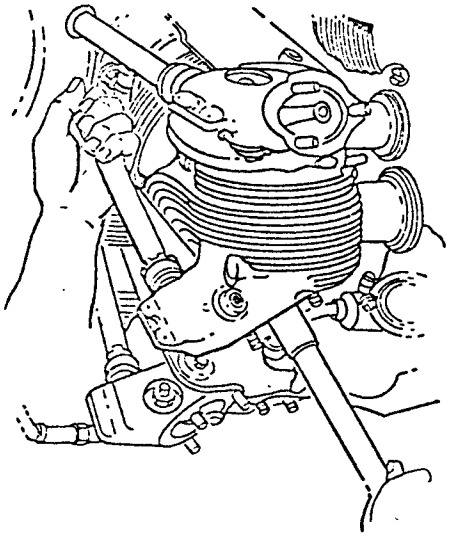

PUSHROD AND COVER REMOVAL

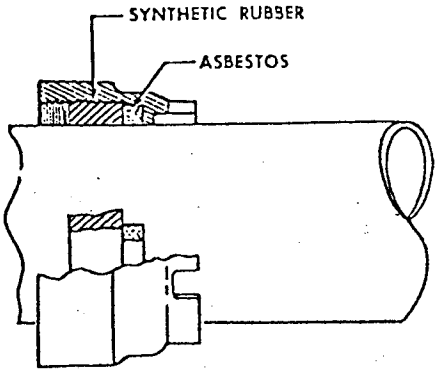

PUSHROD COVER OIL SEALS

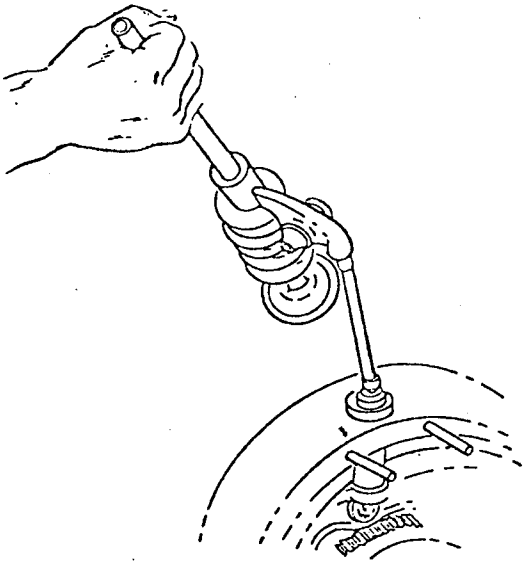

DEPRESSING ROCKER

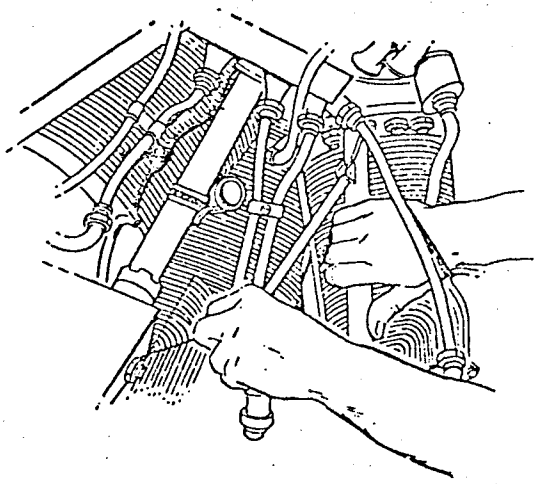

TIGHTENING PUSHROD COVER NUT

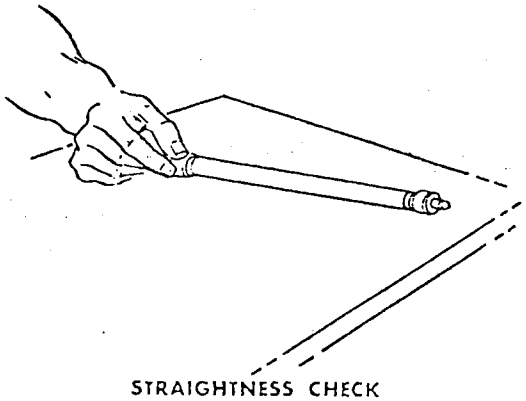

STRAIGHTNESS CHECK

V2-48

Figure 4-15. Pushrods and Covers—Removal and Installation

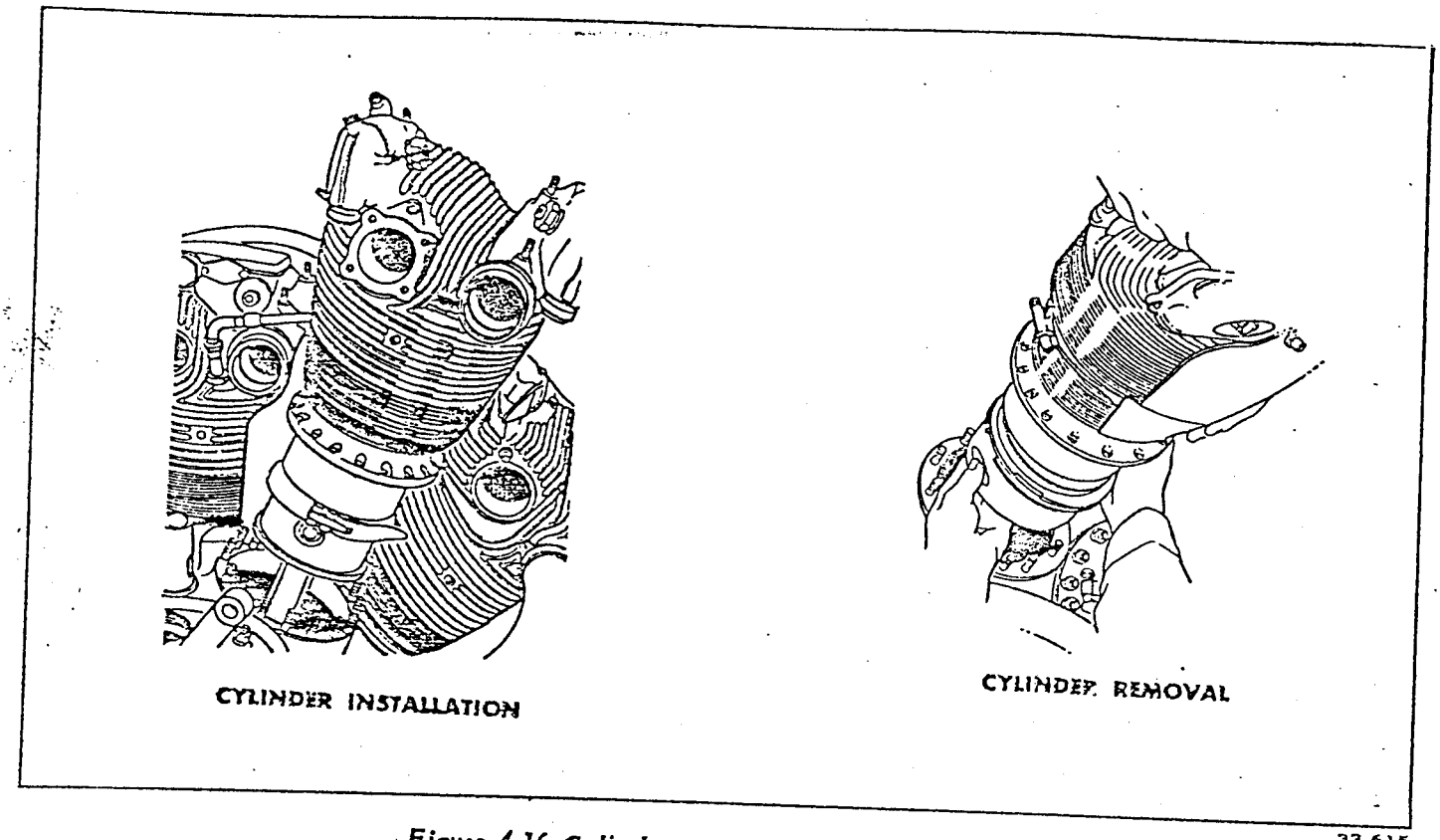

Figure 4-16. Cylinders—Removal and Installation

33,615

d. Face off the rocker box covers on a lapping plate with fine wet or dry sandpaper. Check for flatness, using a 0.0015-inch feeler gage, and wash the covers thoroughly to remove all lapping compound. This insures that the cover parting surface bears evenly on the gasket and prevents oil leakage.

4-49. INSTALLATION OF ENGINE ROCKER ARM AND COVER.

a. Position the rocker arms and drive the shaft into position with a suitable drift.

b. Install the rocker shaft oil seal, flat washer, and castellated nut. Torque the nut to 200 to 250 inch-pounds and secure the cotter pin.

Note

Place a rubber oil seal on the shaft inserts on cylinder No. 8 rocker shafts, before installing the gasket and special rocker shaft caps.

c. Place a copper sealing gasket on the rocker shaft bushing, install the rocker shaft cap, and torque to 275 to 325 inch-pounds.

d. If the valve springs have been removed, insert the lower washers and valve springs in the rocker housing and fit the upper washers over the springs.

e. If the cylinder has been removed from the crankcase, place it over a wooden mounting block shaped to fit the dome of the cylinder head in order to hold the valves in place when the springs are compressed for installation.

f. Compress the valve springs with a PWA-459 valve spring depressor, and install the split locks.

Note

Adjust the valves before installing the rocker box covers.

g. Install the rocker box covers and new gaskets. Tighten the retaining nuts evenly to prevent possible oil leakage. Do not use a sealing compound if neoprene gaskets are used, and install them with the mating surfaces thoroughly dry and free from oil and grease. Tighten and torque the cover nuts to 60 to 75 inch-pounds.

4-50. ENGINE CYLINDER.
(See figure 4-16.)

a. Each cylinder consists of two main parts, a cast aluminum-alloy head and a forged steel barrel. The head is threaded, heated, and shrunk on the cylinder barrel to form a pressure-tight joint. The cylinders have integral fins to provide a means of cooling, and each cylinder is provided with air deflectors which direct cooling air between and around the cylinder fins. The cylinder head incorporates two rocker housings or rocker boxes which are cast with the head. Inter-ear oil drainpipes are provided between the rocker housings of the cylinders located below the

horizontal centerline of the engine. These drainpipes serve to drain scavenge oil from the rocker housings and valve mechanisms to the rocker drain oil sump. The intake and exhaust valves are supported in the cylinder head with bronze intake and exhaust valve guides. The valve seats are of the insert type; the intake seat is made of bronze, and the exhaust seat is made of steel. Early engines incorporate bronze or stainless-steel spark plug bushings. The spark plug bushings are provided with left machined threads to prevent the bushings from coming out during removal of the spark plugs. Modified engines incorporate stainless-steel spark plug inserts which are screwed and staked into each spark plug opening. The pushrod cover glands are installed after the cylinder head has cooled.

b. The cylinders are secured to the crankcase by washers, hexagonal attach nuts, and pal nuts.

CAUTION

When removing a master rod cylinder, arrange to hold the master rod in the center of the crankcase opening so that it cannot fall to either side when the cylinder is removed. This can also be done by rigidly blocking the master rod on each side. If the master rod is permitted to move sideways, the oil-scraper rings on some of the other pistons will come out of the cylinders, resulting in a locked engine. Remove the master rod cylinders No. 5 and 12 last, and install them first, if their removal with one or more front or rear cylinders becomes necessary.

c. Upon removal of a master rod cylinder, the master rod should be centered rigidly in the crankcase opening by suitable blocking or wiring, and rotation of the propeller should be avoided. If the master rod is permitted to move sideways, the oil-scraper rings on some of the other pistons will come out of the cylinders and seriously damage the pistons and the skirts of these cylinders. The main oil sump must be removed before the No. 7 and 9 cylinders can be removed.

d. The oil scavenge external oil pipe extends from the bottom of the front section to the blower section, and interferes with the removal of some of the cylinder flange nuts on No. 8, 9, and 10 cylinders. Remove this pipe before any of the specified cylinders are pulled from the crankcase. Unscrew the bolts which connect the pipe to the front section, and remove the long bolt and nuts securing the lower end of the pipe to the blower section. Remove the clamp which secures the pipe to a flange stud on the No. 10 cylinder flange and withdraw the pipe.

e. The oil pressure external oil pipe extends from the bottom of the front crankcase section to the blower sections and interferes with certain cylinder flange nuts for No. 6, 7, and 8 cylinders. This pipe must be removed before any of the specified cylinders can be pulled from the crankcase. Remove the nuts which fasten the upper end of the pipe to the front crankcase section, and unscrew the oil transfer pipe which fastens the lower end of the pipe to the right side of the blower section. Remove the clamp which fastens the pipe at No. 7 and 8 cylinders and withdraw the pipe.

4-51. CYLINDER REMOVAL.

(See figure 4-15.)

a. Remove all front spark plug lead elbows from the spark plugs and remove the front spark plugs. Remove the rear spark plug elbow and the rear spark plug from the cylinder to be removed.

b. Turn the propeller shaft until the piston of the cylinder to be removed is at the top of its compression stroke. (Do not move the propeller after this position is determined.)

c. Remove the nuts which fasten the exhaust piping to the cylinder exhaust port. Remove the pin which is located at the first exhaust pipe joint aft of the cylinder. This loosens the pipe for removal of the cylinder.

d. Loosen the pushrod cover gland nuts, using a PWA 5630 wrench, and remove the rocker box covers.

e. Depress the valves by using a PWA 455 depressor, and remove the push rods and cover tubes.

f. Remove the primer pipes, if installed, on the cylinder being removed.

Note

The intake pipe is constructed of thin-gage steel and is easily dented or damaged if not handled carefully.

g. Loosen the packing nuts at each end of the intake pipe with a PWA 5072 wrench, and remove the intake pipe.

h. Loosen the clamps that secure the hose connections of the intercylinder drainpipes and slip the hoses to one side.

i. Remove the cylinder attach nuts and washers, using a PWA 2724 wrench and an extension handle. Pull off the cylinder from the engine and make certain the piston pin does not drop out. Do not allow the piston to fall against the adjacent cylinders. Handle the cylinder carefully to prevent damage to the lower skirt of the cylinder barrel.

j. After removal, place the cylinder on wood or in an appropriate carrier, to prevent damage to the cooling fins and the bottom edge of the barrel.

k. Cover the cylinder crankcase and the blower section opening to prevent the entrance of foreign material.

4-52 INSPECTION AND MINOR REPAIR OF CYLINDERS AND RELATED COMPONENTS.

a. Installed cylinders.

(1) Examine the head fins for cracks and breaks. Small cracks in the head fins are not cause for rejection. If more than 14 inches in length of any one fin is completely broken off, or if the total fin breakage on any one cylinder head exceeds 36 square inches, replace the cylinder. Where adjacent fins are broken in the same area, the total permissible length of breakage is 7 inches on any two adjacent fins, 4½ inches on any three adjacent fins, 2 1/4 inches on any four adjacent fins, 1 1/8 inches on any five adjacent fins. Any roughness or sharp corners should be carefully blended into the adjacent surface to eliminate a possible source of new cracks.

(2) Examine the fin braces for security of mounting.

(3) Examine the condition of the spark plug inserts and check the cylinder head for cracks adjacent to the spark plug holes.

(4) Inspect the inside surface of the cylinder head and the areas adjacent to the intake and the exhaust ports for cracks.

(5) Inspect the heavy flange at the base of the head for cracks.

(6) Check the inside of the rocker box walls for indications of valve spring chafing and for cracks.

(7) Check the condition of the pushrod cover nut unions.

(8) If a cylinder barrel is scored, or has other irregularities, replace the complete cylinder assembly.

(9) If a cylinder assembly has failed, before the cylinder is replaced make certain that no metal particles have entered the engine. Examine the link rod to ascertain whether or not it has been bent or damaged.

(10) In the event of excessive exhaust smoke at low power settings, check for clogged rocker box drain.

(11) Check the valve springs for cracked or broken ends.

(12) Check the valve locks. A lock should have no perceptible movement when it is in place on the valve, and the radii of the lock and the valve should coincide.

(13) Examine the rockers for cracks and galling.

(14) Examine intake pipe couplings for evidence of fuel stains. If fuel stains are noted the coupling will be reinspected after engine run as follows:

(a) Run engine to 32 inches manifold pressure, shut down and immediately check for wet fuel deposits at the coupling to cylinder mating area. Any intake pipe coupling found loose or leaking will be tightened to 400-500 ft-pounds torque. (If tool, part No. ASC44A1512 for tightening is not available, replace the cylinder.) Clean area, rerun engine and recheck for wet fuel deposits. If deposits are still evident, replace the cylinder.

Note

Fuel dye stains which may be found on the cylinder head are not considered a fire hazard, and may be disregarded if no dampness is observed.

(15) Examine the pushrod cover seals for signs of leakage. Do not attempt to tighten the packing nuts, after the packing has seated and adhered to the housing. If oil is leaking at packing nut, replace the packing.

b. Procedure for replacement of pushrod seals.

(1) Loosen the pushrod packing nut and slide it back to expose the packing.

(2) Remove the old packing by cutting one side.

(3) Split the new packing by using cutter, Stock No. 9APW-5689 or equal.

(4) Install the split packing on the pushrod housing. Carefully align the split ends.

(5) Install and torque the pushrod packing nuts to 125 inch-pounds, using a PWA-3639 wrench.

(6) Lockwire is not required on the pushrod packing nuts when the seal is replaced on installed engines.

4-53. INSPECTION AND MAINTENANCE OF CYLINDER ATTACHMENT STUDS.

a. If during line inspection a cylinder holddown nut is found loose or there has been failure of an attaching stud, replace that stud, and the two adjacent studs.

b. If more than two adjacent nuts are known to have been loose during engine operation or if more than two adjacent studs have failed, the cylinder will be replaced, and all the studs on the cylinder mounting pad replaced.

c. Cylinders removed in accordance with these instructions will be tagged with a statement regarding reason for removal.

4-54. REPLACEMENT OF CYLINDER FLANGE STUDS.

Check the cylinder pad studs for looseness. Replace any loose or damaged studs. If two or more cyl-

inder holddown studs are loose or damaged, replace all the studs in that particular pad, having a minimum torque of 150 inch-pounds and a maximum of 450 inch-pounds.

CAUTION

Do not use standard size studs to replace a stud or studs which have been removed. Replacement studs are supplied in oversize increments of 0.004 inch; for example, standard size plug 0.004 inch, standard size plug 0.008 inch, etc.

4-55. INSTALLATION OF CYLINDER.

a. Fit the rubber oil seal ring around the radius under the cylinder holddown flange and smooth into place.

b. Coat the cylinder walls, pistons, and rings with a generous amount of engine oil.

c. Rotate the propeller until the link rod or master rod of the cylinder to be installed is at its full outward position. Install the master rod cylinder in each row. The master rod cylinders are No. 5 for the rear row and No. 12 for the front row.

d. Hold the piston in position over the end of the rod and slide the piston pin into position in the piston pin bushing.

Note

Split boss and solid boss pistons are interchangeable. Using activities may install either cylinder assembly on R-1830 engines.

e. Compress the outer piston rings using a PWA-489 clamp, and slide the cylinder over the outer rings. Compress the scraper ring with the clamp. Slide the cylinder over this ring and into place against its mounting pad, being careful that the flange does not damage the stud threads.

f. Center the cylinder on the cylinder pad studs by installing two PWA-3197 cylinder locating nuts on two studs at opposite sides of the cylinder flange. No washers shall be used under these nuts. Jar the cylinder with one hand and tighten the locating nuts gradually with the other hand until they are firmly seated in the recesses of the cylinder flange. When the locating nuts cannot be tightened further by hand in spite of continued jarring of the cylinder, tighten the nuts firmly by using an open-end wrench.

g. Examine the cylinder flange nuts and spherical washers carefully, checking that they are clean and free from burrs. Install the washers, flat side out, over the remaining studs, making certain the washers are not cocked in their seats. Install the intercylinder deflector-locking clamp in its proper position.

Note

No special lubricant shall be used on the threads, but the use of kerosene, Federal Specification VV-K-211B, is permissible. Particular attention must be given to torquing the less accessible nuts.

CAUTION

Because of the necessary unconventional design of cylinder-flange nut wrenches, special care shall be exercised in tightening the cylinder-flange nuts. Check that the cylinder-flange nut wrench, the extension, and the torque-indicating handle are assembled so that the handle is directly opposite the box end of the wrench, and apply torque by rotating the assembly as a unit. Do not let the shaft of the wrench twist to one side, and do not tighten the nuts in excess of the recommended torque, because the studs can be stretched or broken. Before installing the washers, be sure that they are of steel.

h. Install the flange nuts and tighten them to a torque of 325 to 350 inch-pounds, using a PWA-2006 or a PWA-2397 wrench and a PWA-2398 handle. Replace the locating nuts with regular washers and attach nuts. Back off each attach nut to zero torque and again tighten to 300 to 350 inch-pounds torque. Install a pal nut over each cylinder flange nut, using a PWA-5002 wrench. Turn the pal nut fingertight and then tighten it one-quarter turn with a PWA-16009 wrench. Be sure that the cylinder-flange locknuts fit properly and are properly tightened. Any locknut which becomes loose, or is backed off for any reason after wrench pressure has been applied, must be removed and discarded.

i. After the cylinder nuts have been safetied, install the pushrods and covers, deflectors, and oil pipes. Install the spark plugs, exhaust pipes, intake pipes, and primer pipes.

j. Check the valve clearance.

k. After the installation of a new cylinder assembly, a complete compression test will be made. After a complete ground check of the engine, a second compression check shall be made. In addition, a thorough visual check of the engine will be made with particular attention to the condition of the cylinder attach studs, cylinder head, and combustion chamber.

l. Install the rocker box cover.

m. Install the removed cowling.

4-56. CYLINDER DEFLECTORS. Cylinder deflectors of various designs are attached to the engine cylinders. Installation of the deflectors depends upon the cylinder location, and tends to eliminate excessive cylinder-head temperatures by conveying a high-velocity flow of cooling air between and around the cylinder fins. A blast

tube is provided in each cylinder deflector to direct cooling air to the rear spark plug. The intercylinder deflectors are constructed in one piece, and are fastened to the cylinder head by nuts, and to the base of the cylinder by a clamp attached to two adjacent cylinder pad studs.

4-57. REMOVAL OF CYLINDER DEFLECTOR.

a. Remove the screw that secures the clamp on the rear spark plug lead to the inter-ear oil drain tube.

b. Withdraw the rear spark plug lead and the rubber grommet from the slots in the inter-ear deflector and top plate.

c. Remove the two screws that secure the inter-ear deflector top plate to the cylinder head, using a PWA-3916 driver, and remove the top plate.

d. Unfasten and remove the intercylinder deflectors.

4-58. INSTALLATION OF CYLINDER DEFLECTOR.

a. Prior to the installation of the inter-ear deflectors and top plates, inspect for loose blast tubes, dents, cracks, chafing and condition of the paint.

b. Install the intercylinder deflector on the cylinder, securing it to the cylinder head with washers, nuts, and, in the case of rear row cylinders, a fillister-head screw.

c. Fasten the tabbed ends at the front of the cylinder with the long bolt, spring, washer, and nut. Secure the tabbed ends at the rear of the cylinder with the short bolt, washer, and nut.

d. With the rubber sleeves installed on the inter-ear oil drain tube, assemble the deflector clamps to the tube and to the inter-ear deflector.

e. Install the inter-ear deflector top plate and fillister-head screws, using a PWA-3916 driver.

4-59. PISTONS AND PISTON PINS. The aluminum pistons are machined from aluminum-alloy forgings and are of the flat-head type. Fins are provided on the underside of the piston head to add surface for heat radiation to the oil. External grooves are provided for installation of piston rings. Piston rings of high-grade cast iron are installed in the five ring grooves. Compression rings are installed in the top three grooves of each piston, dual oil-control rings in the fourth groove, and an oil scraper or a plain compression ring in the bottom groove. The top compression ring is chromium-plated on the face which bears against the cylinder wall. The piston pin assemblies are machined from forged chrome-vanadium steel and are of hollow construction. Dural piston-pin plugs are pressed into the ends of each pin; another type of piston-pin plug is constructed of steel, with a center of silver, which contacts the cylinder bore if the pin floats in the piston. Dural or steel piston-pin plugs may be used in the same engine, but plugs of the same type should only be used in individual piston pins.

4-60. REMOVAL OF PISTON AND PISTON PIN. The following special tools are required: PWA-1791 ring expanding pliers, and PWA-2302 and PWA-4911 (manual) piston pin pushers.

a. Remove the cylinder.

b. Push out the piston pin by hand and remove the piston. Do not allow the piston pin to drop or become nicked. If the piston pin is difficult to remove due to an accumulation of carbon, etc, use the PWA-2302 pusher.

c. After the piston has been removed, cover the external section of the rod and crankcase opening to prevent entrance of foreign matter.

4-61. MAINTENANCE OF PISTONS AND PISTON PINS.

a. Check the pistons for cracked heads and skirts, broken or distorted ring lands, scored or worn piston pin holes, excessive carbon deposits, broken rings, or rings seized in their grooves. Remove the rings with the PWA-1791 ring expanding pliers, and clean the ring lands.

b. Replace the piston and rings together with the cylinder, if necessary.

c. Check piston pins for scoring, cracks, excessive wear, rust pitting, and out-of-roundness.

d. Check the fit of each piston pin in its bushing in the corresponding link rod, and in its bosses in the corresponding piston.

4-62. INSTALLATION OF PISTON AND PISTON PIN.

a. Lubricate the piston pin with clean engine oil and work it through the connecting rod bushing several times to obtain a free-sliding fit. The bushing must fit tight in the rod, and the oil holes should be in alignment.

b. Install the piston rings on the piston using the PWA-1791 ring expanding pliers. Check that the correct rings are in the correct grooves.

c. Install the piston over the rod with the numbered boss toward the front of the engine.

d. Lubricate the piston pin and insert it through the piston and rod bushing with the numbered end of the pin facing the front of the engine. This should require only a light hand push.

e. Lubricate the piston and ring assembly with a generous amount of oil, and stagger the piston ring gaps so that they are not in alignment. Check that

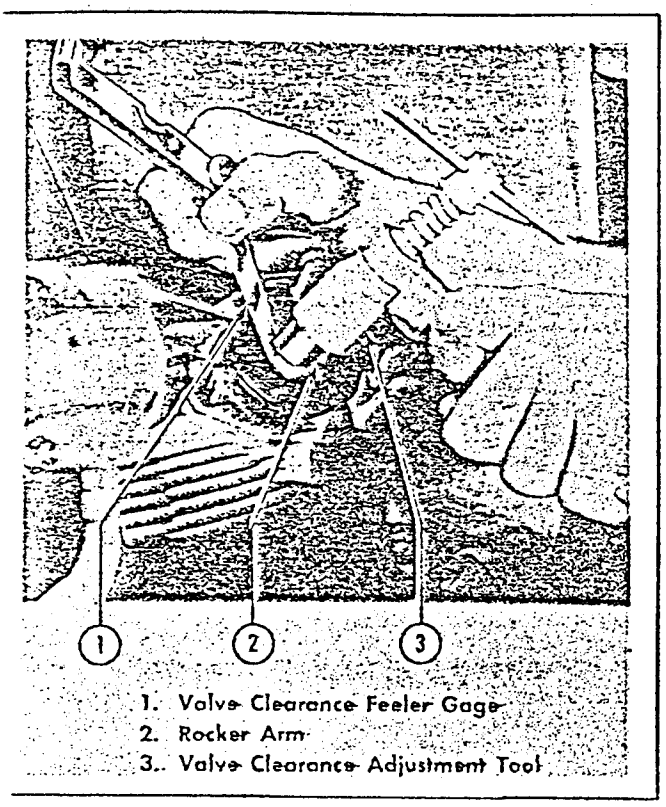

33,618

Figure 4-17. Adjusting Valve Clearances

one of the ring gaps is directly over the piston pin opening of the piston.

f. Make certain that no foreign matter has fallen into or has been left in the cylinder crankcase opening.

g. Slide the cylinder over the piston and bolt it in place, using recommended torque.

4-63. VALVES. *(See figure 4-17.)* An inlet and an exhaust valve are installed in the rocker boxes of each cylinder. The exhaust valve, which is hollow and partly filled with sodium for improved cooling characteristics, has a welded stellite face for longer wear. The intake valve is solid and has a slightly smaller stem diameter than the exhaust valve. Each valve is seated by the action of two concentric springs of different sizes, which operate between two washers. The use of the two springs with unlike natural frequencies avoids the possibility of spring failure and subsequent valve failure caused by a common resonance occurring at a critical engine rpm. Inlet and exhaust valve springs are interchangeable and the springs can be removed without taking the rockers out. After the pushrod has been removed, the rocker arm can be tipped up to permit removal of the spring.

4-64. REMOVAL OF VALVE.

a. Remove the cylinder and place it over a wooden block shaped with a contour similar to the inside of the cylinder head.

b. Compress the valve springs with the valve spring PWA-459 depressor, and remove the split locks which hold the outer valve spring washer in place.

c. Lift the valve springs and washers out.

d. Remove the cylinder from the block, taking care not to drop the valves if the safety circles are not installed.

e. Remove the safety circlets from the valve, if installed, and lift the valves out. DO NOT allow the valves to fall out and strike the cylinder wall.

f. Place the valves in a rack or carrier, and identify for correct assembly.

4-65. INSTALLATION OF VALVE. Perform the following procedure with the cylinders removed from the engine.

a. Clean and oil the valve stems and guides before installing in the cylinders.

b. Position each valve, and install the safety circlets, if removed. Place the cylinder over a wooden block to hold the valves in place during the installation of the valve springs.

c. Place the lower valve spring washer, the inner and outer valve springs, and the upper valve spring washer in position. Compress the valve springs with the valve spring depressor and install the split-cone locks which hold the valve, springs, and washers in place.

4-66. REMOVAL OF VALVE SPRING AND ROCKER.

a. When the cylinder is off the engine. Place the cylinder over a wooden mounting block shaped to fit the dome of the cylinder head. This will prevent the valves from falling out and damaging the cylinder walls when the valve locks and springs are being removed.

b. Compress the valve springs with the PWA-459 compressor and remove the split locks.

c. Withdraw the upper valve spring washer, valve springs, exhaust valve guide circlet, and the lower valve spring washer.

d. Remove the rocker shaft caps and their gaskets. Holding the rocker, push the rocker shaft out of its bushings, and place the rocker shaft in a suitable container.

e. When the cylinder is on the engine. Turn the propeller until the piston of the cylinder from which the springs and rockers are to be removed is at top center position. This will prevent the valves from falling out of their guides into the cylinder when the split locks, washers, and valve springs are being removed.

f. Remove the rocker box covers, pushrods and covers.

g. Compress the valve springs with the PWA-459 compressor, and remove the split locks.

h. Withdraw the upper valve spring washer, valve springs, exhaust valve guide circlet, and lower valve spring washer. Place an elastic band around the valve stem, below the lock groove, to hold the valve if the crankshaft turns.

i. Remove the rocker shaft caps and their gaskets. Holding the rocker, push the rocker shaft out of its bushings, and place the rocker shaft in a suitable container.

4-67. MAINTENANCE OF VALVE SPRINGS AND ROCKERS.

a. Inspect the valve springs for cracks, broken ends, inadequate spring pressure, rust, and improper length.

b. Examine the valve locks for burrs and galling. Check the fit of each pair of locks with its valve. A lock should have no perceptible movement when it is in place on the valve. The radii of the lock and the valve should coincide.

c. Inspect the valve spring washers for cracks, pitting, and galling.

d. Examine the rockers for cracks and galling on the inside diameter. Check and note that no oil passages are obstructed, and inspect the socket in the pushrod end of each rocker for looseness and excessive wear. Check the condition of the threads in the valve end of each rocker.

4-68. INSTALLATION OF VALVE SPRING AND ROCKER.

a. If the cylinder is off the engine, place the cylinder over a dome-shaped wooden block, to prevent the valves from falling into the barrel.

b. Insert the lower valve spring washer, exhaust valve guide circlet, and both valve springs in the rocker housing, and place the upper valve spring washer into position. Compress the valve springs with the PWA-459 compressor, and install the split locks.

c. Install the rocker and the thrust washer in position, being sure that the thrust washer is on the thrust side of the rocker; then insert the shaft through the bushing.

d. Screw on the rocker shaft caps, using new gaskets, and with a PWA-1402 wrench, tighten the caps to a torque of 275 to 325 inch-pounds and safety with lockwire.

e. Install the rocker box covers, pushrods, and covers, as required.

4-69. BLOWER DRAIN VALVE. The blower drain valve is located on the bottom of the intermediate rear crankcase of the engine. It is connected to a pipe leading away from the blower case to a point outside of the cowling near the lower forward edge of the firewall.

Key to Figure 4-18

Item	Nomenclature
1.	Blower Clutch Selector Valve
2.	Blower Clutch Actuating Cylinder
3.	Hydraulic Connections
4.	Selector Valve Indicator Switch
5.	Blower Control Handle
6.	Indicator Light for Left Engine
7.	Indicator Light for Right Engine

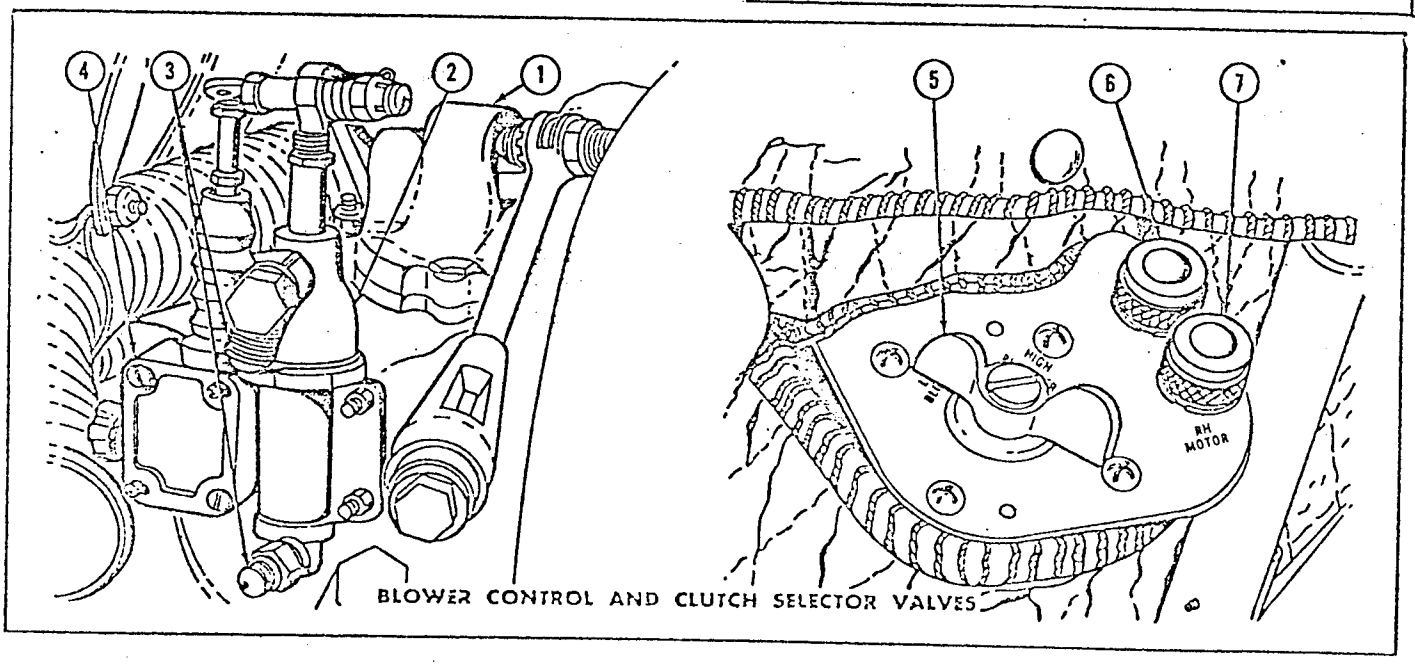

Figure 4-18. Blower Control and Clutch Selector Valves

33.620

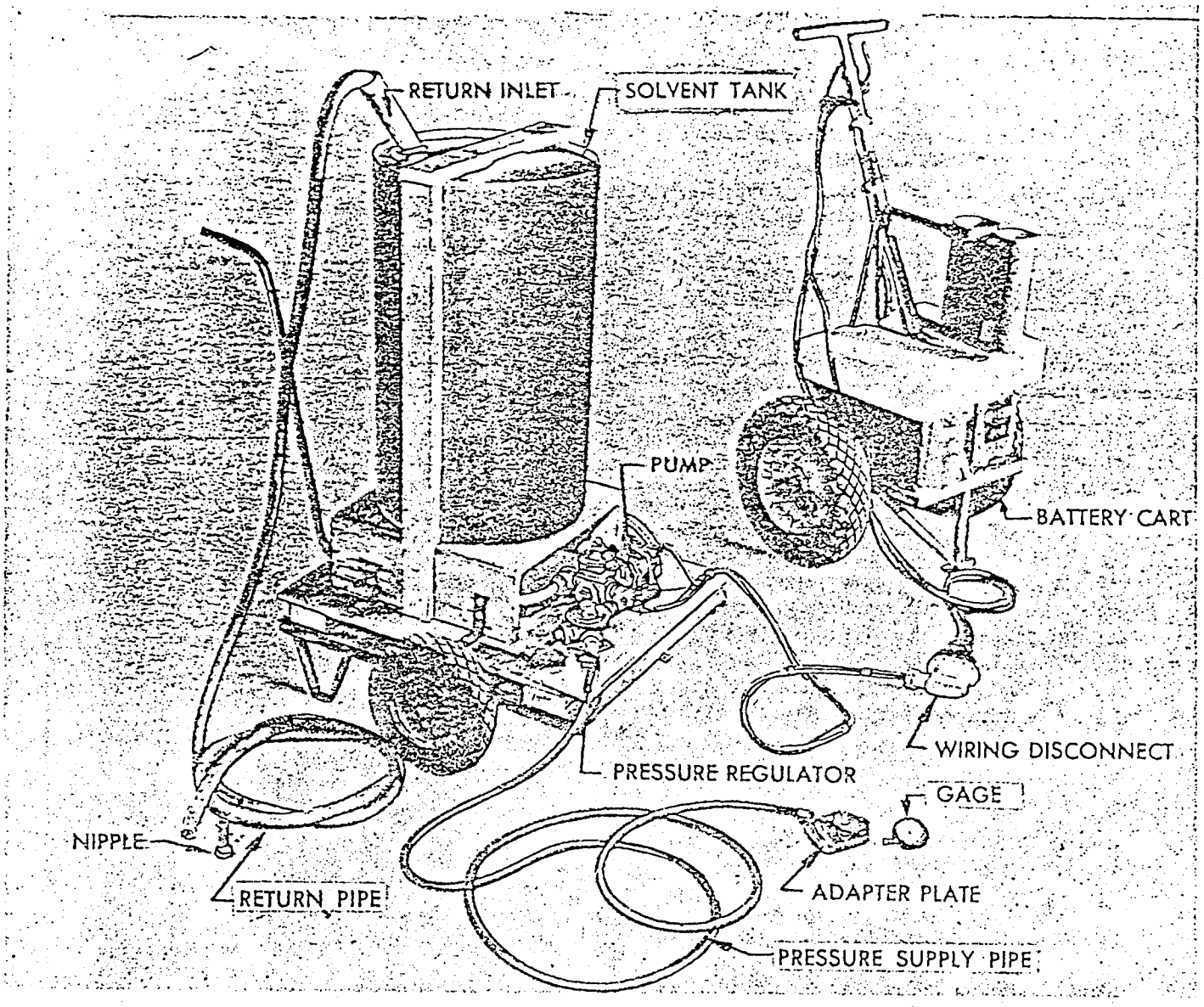

Figure 4-19. Blower Clutch Desludging Equipment

33,621

CAUTION

The valve prevents an accumulation of fuel in the lower part of the blower case, which may run into the lower cylinders and cause damage to the engine when started.

The valve consists of a plate which floats on a shaft and seats against a circular lip on the inside of the adapter. When gasoline accumulates in the valve adapter, the valve allows the gasoline to drain out. The pressure accumulated by the blower holds the valve closed when the engine is started.

4-70. REMOVAL OF BLOWER DRAIN VALVE. Whenever the valve is damaged in severe cases of engine backfire, replace as described in the following:

a. Remove the lower sections of the engine accessory cowling.

b. Remove the hose clamps and slip the hose to one side.

c. Remove the drain valve, using a wrench. On some C-47 airplanes, it may be necessary to remove the hose elbow before removing the valve.

4-71. MAINTENANCE OF BLOWER DRAIN VALVE. Engines have been damaged by failure of personnel to ascertain definitely if the blower drain valve was functioning properly after removing the engines from storage, or after operation under extreme dusty conditions.

a. Flush and wash the valve in cleaning solvent, Federal Specification P-S-661, kerosene, Federal specification VV-K-211B, or carbon tetrachloride. Modified engines incorporate screens which exclude foreign

matter from the valve. Clean both screens thoroughly.

b. Check the valve and shaft operation to determine that the plate is not sticking and that it falls free of its seat when the upper valve assembly drops to its lowest position. The plate, insofar as damage to the engine through flooding with fuel is concerned, is the most important part of the assembly.

c. The hole through the center of the shaft must be clear and free of sand, dust particles, or any form of foreign substance.

4-72. INSTALLATION OF BLOWER DRAIN VALVE.

a. Install the fuel drain valve and make certain the gasket is in place.

b. Connect the hose and fasten the hose clamps.

c. Replace the lower sections of the engine accessory cowling.

4-73. BLOWER CLUTCH SELECTOR VALVE.

(See figure 4-18.) The blower clutch selector valve directs oil under pressure, to the low-blower (high, if installed) ratio clutches. This assembly is mounted on the left side of the intermediate rear crankcase of the engine adjacent to the carburetor mounting pad. Pressure oil passages are provided in the selector valve housing, the selector valve housing bore in the crankcase, and the intermediate rear crankcase.

4-74. REMOVAL OF BLOWER CLUTCH SELECTOR VALVE FOR FLUSHING CLUTCHES.

a. Disconnect the blower control actuating cylinder.

b. Remove the fiber insert nuts and flat washers on the cover of the housing and lift the housing and cover straight up.

c. Remove the blower clutch selector valve from the engine.

4-75. INSTALLATION AND FLUSHING PROCEDURE OF BLOWER CLUTCH SELECTOR VALVE.

(See figures 4-19 and 4-20.) The flushing equipment required consists of a 20-gallon tank with a standpipe outlet in the bottom and an inlet at the top, an electrical receptacle, wiring to connect the battery cart to the pump, a mounting base preferably on wheels, an electrically driven van-type pump or equivalent, a pressure regulator valve, two hoses of sufficient length, a special flushing selector valve, and a special hose nipple. Flush with cleaning solvent, Federal Specification P-S-661, or kerosene, Federal Specification VV-K-211B.

a. Install the flushing valve.

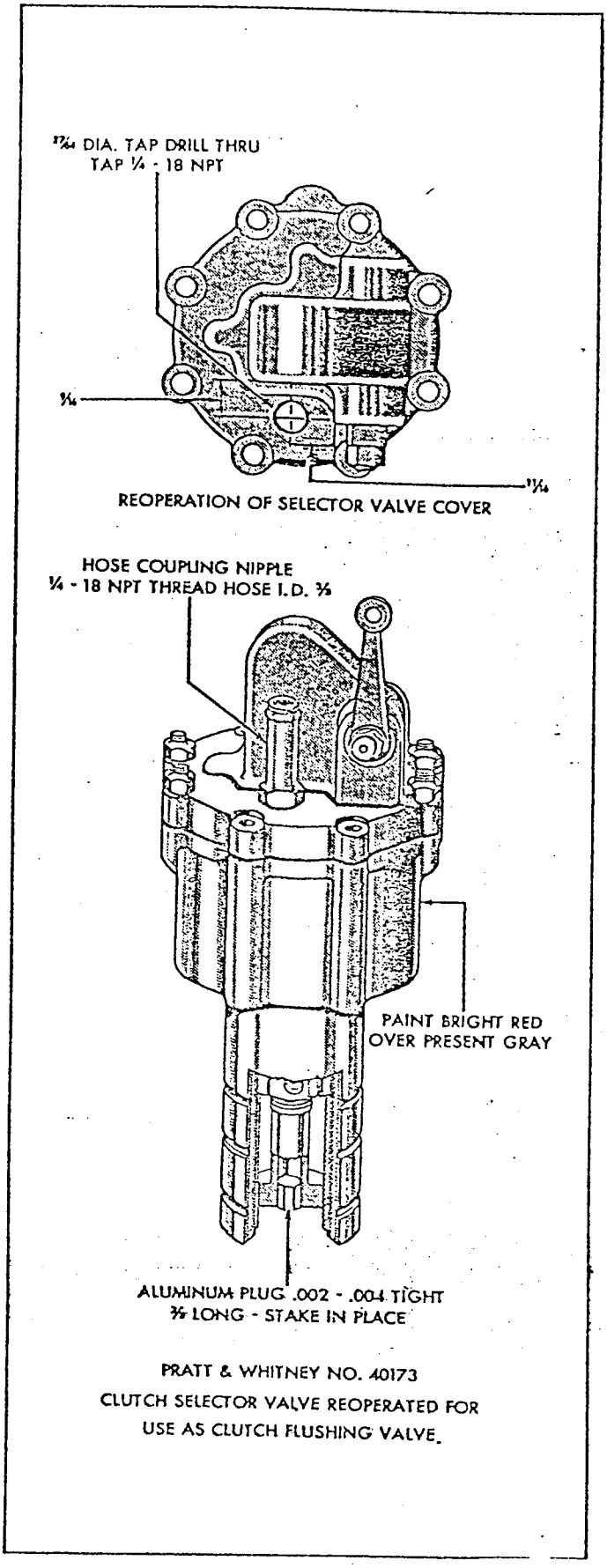

Figure 4-20. Blower Clutch Selector Valve Conversion for Flushing

b. Remove the finger drain plug from the rear cover case so that the fluid can drain out. Install the special hose nipple in this opening.

c. Install the pressure gage on the inlet pipe.

d. Connect the supply pipe from the pump to the flushing valve, and connect the return hose from the top of the supply tank to the adapter nipple at the location of the finger drain plug.

e. Fill the tank with approximately 20 gallons of solvent, Federal Specification P-S-661.

f. Set the pressure regulator for 50-pounds maximum.

g. Place the flushing valve selector arm down, or in the LOW blower position.

h. Place the equipment in operation and allow the solvent to circulate through the clutch for approximately 30 minutes. Watch the gage so that the pressure does not exceed 50 psi, as the equipment will not withstand continued operation at higher pressures.

i. During this flushing operation, rotate the propeller by hand approximately 120 degrees every 10 minutes.

j. After the low-ratio clutch has been flushed, raise the control lever on the flushing valve so that it is in HIGH blower position, if installed.

k. Place the equipment in operation and flush the high-ratio (if installed) clutch for approximately 30 minutes. The position of the pressure gage need not be changed for this second operation.

l. Remove the special equipment and install the disassembled parts of the engine.

m. Start the engine and run at 800 rpm until the minimum allowable heat temperature is obtained 40°C (104°F).

n. While the oil is still relatively cool, increase the engine speed to 1800 rpm.

o. Rapidly shift the blower into high ratio (if installed). There should be a momentary drop in the oil pressure, and an increase in the manifold pressure.

p. After one or two additional shifts at this rpm, allow the engine to idle in low blower to cool the clutches.

q. Remove the flushing equipment and install the blower clutch selector valve.

4-76. ENGINE PRE-INSTALLATION CHECKS.

Note

In all cases of internal engine failure, oil tanks, fittings, piping, and related accessories must be disassembled and cleaned. Replace the oil cooler, temperature regulator, and propeller feathering pump, if operated during the engine failure. Adequate precaution against fire hazards must be observed at all times when using a flushing solution which contains kerosene, Federal Specification VV-K-211B, or dry cleaning compound, Federal Specification P-S-661, in the cleaning operation.

a. Oil system and oil tank flushed and thoroughly cleaned.

b. Oil cooler drain plug safetied.

c. Firewall and all attached parts cleaned.

d. Check the firewall for cracks and sheared rivets; and the asbestos seals for deterioration, damage, and security. Repair or replace where necessary.

e. Check the piping passing through the firewall for chafing, damage, and specified clearance; and all bulkhead fittings and quick-disconnections for security and damage.

f. Check the engine Lord mounts for security and corrosion; rubber core for separation, flex cracks, and permanent set; and housing, disc, and cover for surface damage.

g. Check the upper ring cowl support arms for security and damage. Correct as required.

h. Check the cables at the firewall for corrosion and fraying; turnbuckles and turnbuckle terminals for cracks; and pulleys for cleanliness, binding wear in grooves, lubrication, and security. Correct as required.

i. Check the push-pull rods on the firewall for damage; rod end bearings for corrosion, freedom of operation, lubrication, and alignment; jamnuts for tightness; attaching bolts for wear and security; and bellcranks and attaching brackets for damage and security. Make corrections as required.

j. Check the fire detectors, respective conduits, and electrical connectors on the firewall for damage and security. Correct where necessary.

k. Check the electrical connectors, fittings, and terminals on the firewall for damage and security; and the mount bondings for fraying and security.

l. Check the feathering pump for damage and security; connecting pipes and flexible hose for damage, deterioration and security; and the electrical connector for specified safety. Repair or replace where necessary.

m. Check the oil dilution and primer solenoids for damage and security, electrical connection for specified

safety, and the tubing for damage and security. Repair or replace where necessary.

n. Inspect the tailpipes and bolt holes for cracks and broken welds, and check for security. Repair or replace where necessary.

o. Check the oil cooler and accessories for damage and security, and the rubber air seal for deterioration.

p. Check the oil temperature regulator for damage, security, and specified safety. Correct and adjust.

q. Check the cowl flap, primer, and manifold pressure pipes and fitting connections leading to the firewall for damage and security.

4-77. REMOVAL OF ENGINE.

Note

Cap all piping after it has been disconnected.

a. Remove the engine accessory cowling.

b. Remove the propeller.

c. Drain the oil at the wye drain. On some C-47 airplanes, a system drain is located on the forward side of the firewall.

d. Remove the two vent pipes from the crankcase.

e. Disconnect the oil pipe from the engine at the oil cooler.

f. Disconnect the inboard and outboard oil vent pipes at the first hose forward of the firewall.

g. Disconnect the main fuel pipe at the hose fitting on the firewall.

h. Disconnect the vapor separator pipe at the firewall.

i. Disconnect the hydraulic pressure and suction pipes at the self-sealing coupling on the firewall. Plug the flexible hose ends.

j. Disconnect the engine fire extinguisher pipe by unscrewing the collar forward of the firewall. Leave the short flexible hose attached to the firewall.

k. Disconnect the pipe from the vacuum pump at the firewall.

l. Disconnect the propeller feathering oil pipe at the flexible hose on the firewall at the right magneto.

m. Disconnect the oil IN and OUT pipes at the hose fitting on the firewall.

n. Disconnect the cowl flap hydraulic pipes at the firewall, to free the hoses that were disconnected from the actuating cylinders when the engine cowling was removed.

o. Disconnect the carburetor vapor return pipe at the hose fitting forward of the firewall.

p. Disconnect the oil-pressure hose at the firewall.

q. Disconnect the fuel-pressure hose at the carburetor.

r. Disconnect the propeller anti-icing pipe at the firewall.

s. Disconnect the manifold pressure pipe at the firewall.

t. Disconnect the engine primer pipe at the firewall.

u. Disconnect the propeller control cables at the turnbuckles forward of the firewall.

v. Disconnect the electrical conduit at the firewall.

w. Disconnect the carburetor air, mixture, and throttle control rods at the bellcranks on the firewall.

x. Disconnect the ignition, starter, and generator conduits at the firewall electrical connector.

y. Attach the hoist lifting sling to the hoist eyes provided for on the engine.

z. Disconnect the exhaust ring from the tailpipe.

aa. Unscrew the four engine mount bolts, but do not remove them. Approximately four and one-half turns are required to free the bolts.

ab. Remove the lower engine-mount bolts. Check for clearance and secure the hoist attachments.

ac. Remove the two upper bolts and swing the engine forward approximately 4 inches to clear the exhaust tailpipe.

4-78. ENGINE INSTALLATION. *(See figure 4-11.)* Connect and secure the following controls, piping, and electrical leads to their respective fittings after performing step a. Safety check each step procedure.

a. Carefully raise the engine by means of a chain-hoist lifting sling and guide the engine and mount into position. Check that the throttle linkage is in position beside the carburetor. Install engine mount attaching bolts, tighten to a snug fit. With chain hoist maintaining support; torque top mount bolts to 125±15 inch pounds, relieve support of engine sling, complete torque of bottom mount bolts to 125±15 inch pounds, safety wire and mark each mount bolt for slippage.

b. Throttle control.

c. Mixture control.

d. Oil tank vent (left and right) pipes to the firewall.

e. Carburetor return pipe to the firewall.

f. Oil return pipe and scavenge pump to the cooler. (Install the gasket to the fitting on the scavenge pump.)

g. Oil inlet pipe and firewall to the inlet port of the pump. (Install the gasket to the fitting on the pump.)

h. Oil pressure hose to the firewall.

i. Cowl flap open fitting and hose from the firewall to the fitting on the diaphragm.

j. Manifold pressure pipe to the firewall.

k. Primer pipe to the firewall.

l. Propeller anti-icing pipe to the firewall.

m. Cowl flap closed fitting and hose from the firewall to the fitting on the diaphragm.

n. Hydraulic pump suction pipes to the firewall.

o. Hydraulic pump pressure pipes to the firewall.

p. Vacuum pump pipe to the firewall.

q. De-icing oil separator to the firewall.

r. Fuel pump to the firewall.

s. Fire detector lead to the firewall (lower).

t. Generator leads to the firewall.

u. Starter lead to the firewall.

v. Jackbox lead to the firewall.

w. Propeller feathering vent pipe to the feathering pump.

x. Fire extinguisher pipe to the firewall.

y. Magneto lead to the firewall.

z. Fire detector lead (upper) to the receptacle mounted on the bracket attached to the firewall.

aa. Exhaust tailpipe.

ab. Propeller governor cables connected and rigged.

ac. Depreserved carburetor (soak diaphragms for 8 hours).

ad. Install the carburetor airscoop; connect the adapter between the carburetor and the airscoop.

ae. Carburetor anti-icing pipes.

af. Carburetor air door controls (adjust).

ag. Clean the carburetor air screens. Saturate with oil, Grade 1100. Allow to drain from 4 to 8 hours, and install.

4-79. REMOVAL AND INSTALLATION OF ENGINE COMPONENTS. Removal and installation of the engine components are accomplished as described in the following paragraphs.

4-80. ENGINE REAR CASE. The engine rear case incorporates bronze bushings which support the rear ends of the accessory, impeller intermediate, generator intermediate, and generator drive gears. A housing on each side of the rear case supports a tachometer intermediate drive gear, which drives a tachometer drive gear and an auxiliary drive gear.

a. Bushings in the rear case support the vacuum pump drive gear and front ends of the magneto drive gears. The case houses the rear oil pump, an oil thermostat, and a compensating oil-pressure relief valve. The case incorporates flanges for mounting a starter, a generator, two magnetos, a vacuum pump, two tachometers, and two auxiliary accessories.

b. All accessories, with the exception of the generator and the vacuum pump, are driven through two impeller intermediate drive pinions. The pinions are driven by the accessory drive gear.

c. The tachometer intermediate drive gears are mounted in housings at the right and left sides of the rear case. Each of these gears incorporates an integral bevel gear, an integral spiral gear, and a spur gear. The spur gear is splined to the shaft and drives an auxiliary drive gear. The integral bevel gear meshes with, and is driven by, the corresponding tachometer drive case. Two of the tachometer drive gears are mounted in the rear case, and are driven by the spiral gears of the tachometer intermediate drive gears.

4-81. ENGINE AUXILIARY DRIVE INSPECTION AND CLEANING. Oil passages in and to the auxiliary drives in the rear crankcase section must be inspected and cleaned, due to the numerous failures of the left and right auxiliary drives because of metal pickup and heat resulting from lack of lubrication.

a. Remove the spacer assembly from both sides of the engine. On drives in which a hydraulic pump or accessory is mounted, remove the small drainpipe from the bottom of the pump and the seven nuts that hold the spacer to the engine. The complete hydraulic pump and spacer assembly can then be removed as one unit.

b. Remove the seven nuts only on auxiliary drives that do not have an accessory mounted. The spacer assembly can then be removed by hand, with the drive shaft intact. It can also be removed by hand from the vacuum pump and the tachometer drive adapter. Remove the vacuum pump drive gear, by hand, from the vacuum pump drive control shaft to allow an unobstructed view of the inner parts of the assembly.

Note

Remove the vacuum pumps and other accessories mounted on the spacer assembly before washing them in the cleaning solvent.

c. Inspect the spacer assembly for adequate lubrication service. If the bushings are found to be dry, wash the spacer assembly in cleaning solvent, Federal Specification P-S-661. Blow out the oil passages of all spacer assemblies and check for clearance.

Note

File or grind the end of the wire to remove all sharp edges or burrs before inserting the wire into the passage of the vacuum pump drive shaft as described in steps d and e.

d. Insert a safetywire into the oil passages in the rear crank case section of the engine that supplies oil to the spacer assembly. The wire will check at 3¾ inches from the mating surface.

e. Insert a fine wire (approximately 0.017-inch diameter) into the oil passage in the adapters. The wire will pass down between the shaft and the adapter. Check at 3 inches from the opening.

f. Insert one end of a ⅔-foot length of hose, Specification MIL-H-6000, in the adapter opening from which the vacuum pump drive shaft was removed. Hold the opposite end of the hose as high as possible and fill the hose with the cleaning solvent. Apply air or fluid pressure to the cleaning solvent to force it through the passages. Applied normal pressure of 10 psi will force a stream of cleaning solvent from the opening that supplies oil to the spacer assembly. Flush until the cleaning solvent flows clean and any sludge tending to block the passages has been removed. A suitable flushing device can be an air hose adapter to apply pressure to the solvent-filled hose, a spray gun used at all hangar and line installations for airplane and engine cleaning purposes, or any plunger-type squirt gun which permits positive pressure application to the solvent.

g. Again check the oil passages with the wire as described in steps d and e, and make certain that they are clear of any obstructions.

h. Turn the engine over with the starter a sufficient number of times and check that oil flows into the drive housing and out of the hole supplying oil to the detached spacer assembly.

i. Lubricate all parts with clean engine lubricating oil and assemble them. Check that the drive shaft is fully bottomed and flush with the bushing in the spacer assembly before attempting to install the spacer assembly on the engine.

Note

Exercise care during the assembly to prevent damage to the seal.

CAUTION

Do not replace auxiliary drive parts if this inspection reveals that one or more of the parts is unserviceable because of damage or lack of lubrication. Replace the engine.

4-82. ENGINE STRIPPING.

(See figures 4-12, 4-99, 4-89, and 4-101.)

Note

Tag all parts and record all necessary information on the applicable data sheet. All parts shall be cleaned, inspected, stored, or sent to the overhaul depot in accordance with the latest existing directives.

a. Make certain the propeller shaft is protected, and, using a suitable hoist, place the demountable power plant in the engine buildup stand. Secure the propeller shaft with the hinged lock and bolt *(see figure 4-86)*.

b. Remove the hoisting equipment from the engine and install the propeller shaft protector cap.

c. Remove the starter ground lead, induction vibrator, or the booster coil-to-magneto and magneto-to-firewall flexible conduit assemblies. Install the protector cap on the electrical fitting.

d. Disconnect and remove all flexible hose and fittings connected to the rear section of the engine, diaphragm, carburetor, fuel pump, oil pump, hydraulic pump, and fire spray ring.

CAUTION

Make certain all engine-mount cover plates, plugs, and port caps are installed after the removal of each part.

e. Disconnect and remove the flexible hose and piping from the vacuum pump, vacuum-pump relief valve, oil separator, and engine-mount tubes and support brace.

f. Remove the oil separator-to-rear section drainpipe, flexible hose, and fitting on the rear section. Install the drain plug.

g. Remove the oil separator and bracket from the engine-mount tube.

h. Disconnect and remove the induction vibrator or booster coil-to-engine section pull box electrical conduit, and remove the vibrator, or the coil, and the bracket from the engine-mount tube.

i. Disconnect and remove the electrical conduit from the oil temperature bulb, engine tachometer generator, and the carburetor temperature bulb. Install a plug in the oil temperature bulb outlet.

j. Remove the carburetor screen and airscoop adapter from the carburetor, and remove the carburetor or carburetor and adapter from the engine. Install the cover plate on the carburetor mount pad to prevent foreign matter from entering the blower section.

k. Disconnect the drainpipes from the hydraulic pump, fuel pump, and blower drain fitting. Disconnect and remove the pipes from the nacelle cowling inner-ring assembly.

l. Disconnect the wye vent pipe assembly and the piping from the nacelle cowling inner ring, diaphragm, and upper rear section of the engine. Remove and disassemble the piping, and plug or cap the outlet on the rear section.

m. Remove the hydraulic pump, vacuum pump, and the fuel pump from the rear section of the engine. Install all mount-pad cover plates.

n. Remove the tachometer generator and install the protector cap on the attach fitting.

o. Remove the starter, generator, and brace assembly from the rear section of the engine. Install the mount-pad cover plates, and replace the starter and generator brace attach nuts.

p. Remove the engine section pull box assembly from the engine-mount tube and lay it aside.

q. Remove the nuts attaching the engine mount-to-engine bonding cables, and replace the nuts after removing the cables.

r. Remove the engine-to-engine mount attach nuts and sandwich washers, and remove the engine mount with the fire spray ring, cowling inner ring assembly, and cowling attach brackets attached. Remove and disassemble, as necessary, all parts attached to the engine-mount assembly.

s. Remove the exhaust collector ring from the engine as described in paragraph 4-225, and install the cover plates on the exhaust ports of all cylinders.

t. Disconnect the crankcase vent piping from the fitting on top of the rear section, slip the bottom section out of the asbestos seal and retainer plate on the diaphragm, and remove the piping from the engine. Install the plug, or seal the crankcase vent outlet.

u. Disconnect and remove the fire detector ring electrical conduit, propeller governor conduit, and thermocouple and electrical conduit from the engine. Remove the conduit and the attach fittings from the diaphragm and the engine section pull box, and remove the pull box from the engine.

v. Disconnect and remove the magneto blast tubes, brackets, and diaphragm fittings from the engine.

w. Remove the propeller governor flexible hose, Vee-brace assembly, piping, and diaphragm fitting from the engine.

x. Remove the propeller governor, control cable, cable control bracket assembly, and the fairleads from the engine. Install the governor mount-pad cover plate and dehydrator plug.

y. Disconnect and remove the fire detector bow ring and mounting brackets, and the antidrag ring support brackets from the rocker box mounting lug of each cylinder.

z. Disconnect and remove the primer piping and fitting from the distributor and the diaphragm. Install a plug in the distributor outlet.

aa. Disconnect and remove the propeller anti-icing feeder tube assembly, flexible hose, piping, and diaphragm fitting.

ab. Remove the asbestos seals, doublers, retainer plates, and attach brackets from the diaphragm assembly.

ac. Remove the sandwich washers, diaphragm, engine-mount attach bolts, and exhaust collector ring support brackets from the engine.

ad. Remove the blower drain fitting, and the drain fitting and hose from the No. 7, 8, and 9 intake pipes. Install plugs in all outlets.

ae. Remove the spark plugs, and install the dehydrator and the breather plugs in the spark plug ports. Install the plastic protector on the spark plug lead connectors.

4-83. PRESERVATION OF ENGINE FOR SHIPMENT.

a. Remove all dehydrator and breather plugs from the spark plug ports.

Note

Dehydrated air shall be used for all spraying operations, and the use of hot preservative mixture is preferred.

c. Install new dehydrator plugs and vent plugs. Dehydrator plugs go in the aft port of the cylinder and the vent plugs in the front port.

d. Remove the carburetor mount-pad cover plate, place dehydrator bags of dehydrating agent, Specification MIL-D-3464, Class 2, in the rear case, and replace the cover plate.

4-84. PRESERVATION OF CARBURETOR FOR SHIPMENT.

a. Remove the drain plugs from the metered and unmetered fuel chambers. Remove the fuel drain plug from the lower left side of the carburetor adjacent to the knurled idle mixture adjusting nut. The fuel will drain from the carburetor when these plugs are removed. Unscrew the air chamber drain plug and allow any moisture to drain out, replacing this plug immediately so that no preservative oil will get into the air chambers.

b. When the carburetor has drained thoroughly, replace the three plugs. Remove, inspect, and install the fuel strainer. If there is a plug installed in the vapor vent outlet, remove it.

c. Place the manual mixture control lever in the AUTO-RICH position and the throttle valves in the wide OPEN position.

d. Connect an oil supply line to the carburetor fuel inlet, and inject corrosion-preventive mixture, three parts oil, Specification MIL-O-6081 (AN-O-9), grade 1010, mixed with one part corrosion-preventive compound, Specification MIL-C-6529, Type I, at 10 to 15 psi pressure until oil flows from the fuel outlet. Do not permit the overflow oil to run into the main or boost venturies and the impact tubes, or on the automatic mixture control unit. The presence of oil on

these parts will cause a collection of dust and grime which will tend to alter the contour of the main and boost venturis, clog the impact tubes, and cause a variation in the calibration of the automatic-mixture control unit.

e. Remove the fuel drain plug and the plugs to the metered and unmetered fuel chambers; drain the excess oil.

f. Replace all plugs and safety with lockwire. Plug the fuel inlet. If the fuel transfer tube from the fuel control unit to the fuel feed valve is not to be left on the carburetor, plug the outlet provided for this tube. Plug the vapor vent pipe connection and all other openings in the carburetor. Lubricate all joints in the control linkages with the slushing oil. Secure the throttle valve in the closed position with lockwire.

g. If the carburetor is to be shipped over salt water or stored near salt water, spray the exterior surfaces with the slushing oil. Make certain that no oil comes in contact with the main or boost venturis, the impact tubes, or the automatic-mixture control units. Set the carburetor aside and allow the excess oil to drain.

4-85. INSTALLING ENGINE AND CARBURETOR IN SHIPPING CONTAINER.

(See figures 4-83, 4-84, and 4-85.)

a. Remove the protector cap from the propeller shaft and install the lifting eye on the end of the shaft.

b. Attach a suitable hoist to the engine lifting links, and remove the engine from the buildup stand.

c. If a tilting arch is not being used, attach a suitable hoist to the propeller shaft lifting eye and rotate the engine 90 degrees from the horizontal (flight) position.

d. Place dehydrator bags containing dehydrating agent, Specification MIL-D-3464, Class 2, in the basket located in the lower half of the shipping container.

e. Slowly lower the engine into the shipping container, guiding the engine-mount brackets over the bolts on the shipping container support plate. Install the washers and the self-locking nuts on the engine attach bolts, and tighten the nuts.

f. Remove the hoisting equipment and install the propeller shaft protector cap.

g. Install the carburetor mounting bracket on the cylinder rocker box lugs and the reduction gear housing attach bolts. Install the carburetor on the bracket.

h. Make certain the seal ring is on the lower half of the container and held in place with tape.

i. Using suitable hoisting equipment, slowly lower the top half of the shipping container over the engine. Guide the container onto the dowel pins on the attach flange of the lower half. Remove the hoisting equipment.

j. Install the container flange bolts and nuts. Tighten the nuts to the established torque limit for the bolts used.

k. Coat the flange bolts and nuts with corrosion-preventive compound, Specification MIL-C-11796A, Class 1.

Note

When closing procedures have been completed, uniform metal-to-metal contact will be obtained between the upper and the lower section flanges.

l. Install the humidity indicator plug in the accessory case fitting.

m. Place the engine Form AF 829 in the accessory tube, and install the accessory case metal door.

4-86. OIL SYSTEM. *(See figures 4-22 through 4-31.)*

Each engine section is provided with an independent oil system with a capacity of approximately 34 gallons. The oil tank holds 29 gallons and the system holds 5 gallons. The system serves a triple purpose; it provides lubrication for the internal parts within the engine, conducts heat away and cools the moving parts, and supplies the medium of transmitting control forces to propeller feathering.

4-87. In normal operation of the system for lubrication and cooling, the oil is drawn from the tank through a pipe to the engine-driven pump, and is forced under pressure to all parts of the engine requiring lubrication, picking up the frictional heat within the engine and then dropping to the engine sump. A scavenge pump forces this oil out of the engine and through piping to the temperature regulator, where under normal conditions, it passes through the core of the cooler. Oil heat is transmitted through the thin copper core to the airstream passing through the cooler. From the temperature regulator, the oil returns through piping to the top of the oil tank. On cold starts, the oil returning from the engine bypasses the cooler until a minimum temperature is reached, then enters the cooler to warm the oil congealed in the cooler core before attempting to force the return oil through with resultant high pressure. The oil returning to the tank enters the top of a hopper, the bottom of which is located above the tank outlet fitting. This arrangement permits the warmed oil to return to the engine, and as the warm oil flows through the hopper, the heat is transmitted to the surrounding oil in the tank. Provisions for diluting the oil with fuel are used when extreme cold start conditions are anticipated.

4-88. The component parts of each oil system are the oil tank located in the nacelle, oil temperature regulator (oil cooler) suspended from the firewall below the engine accessory section, and the pipes and fittings. The oil pump and strainer are engine units, while the temperature and warning equipment are to be consid-

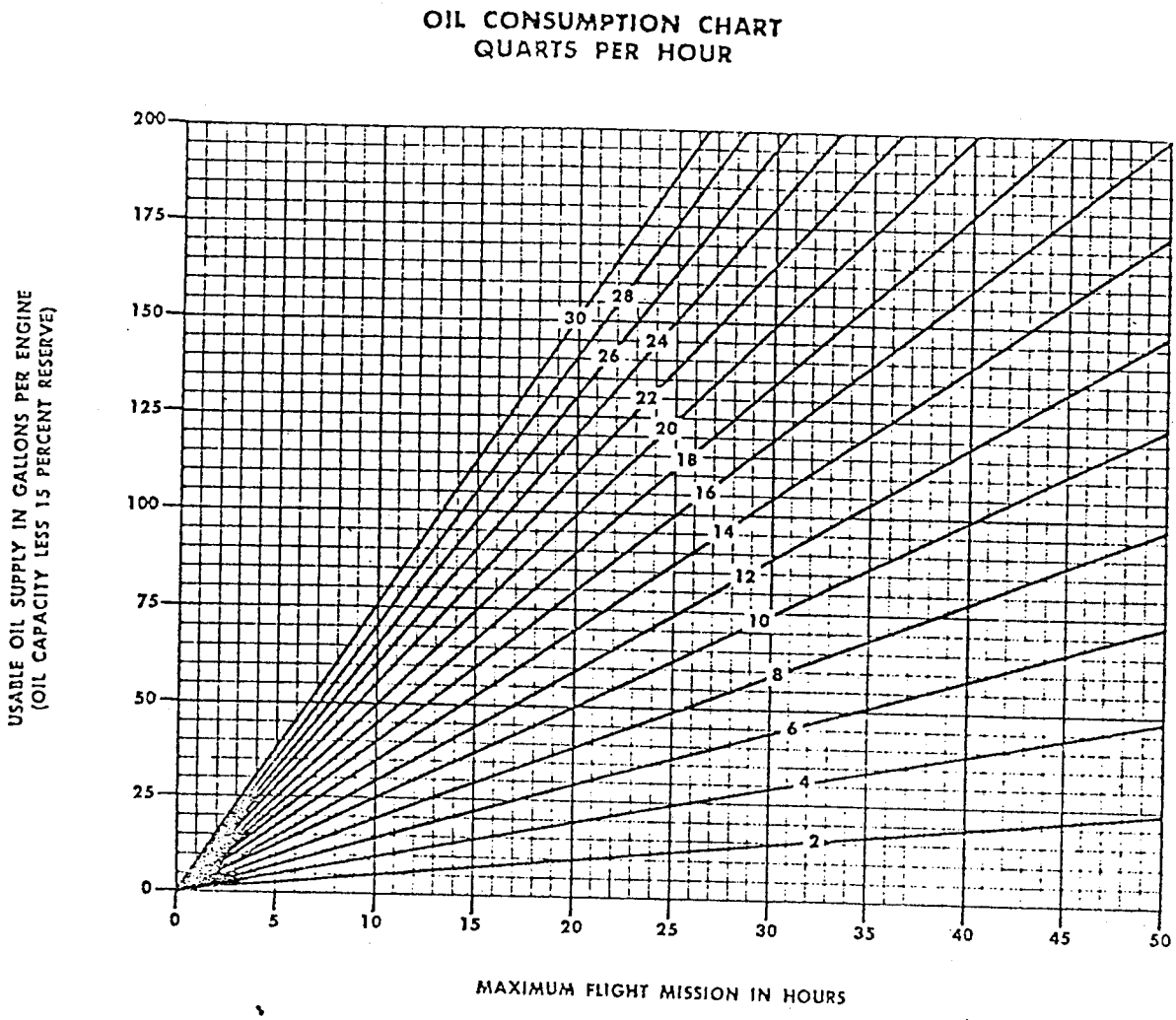

SAMPLE PROBLEM:
Oil tank capacity of an aircraft is 85 gallons, less 15 percent reserve is 85—13=72 gallons usable oil supply.

Assuming that information from DD Form 781-2 indicates the highest oil consumption per engine to be 16 quarts per hour, the maximum flight time is found to be 18 hours.

Figure 4-21. Oil Consumption Chart

40.609

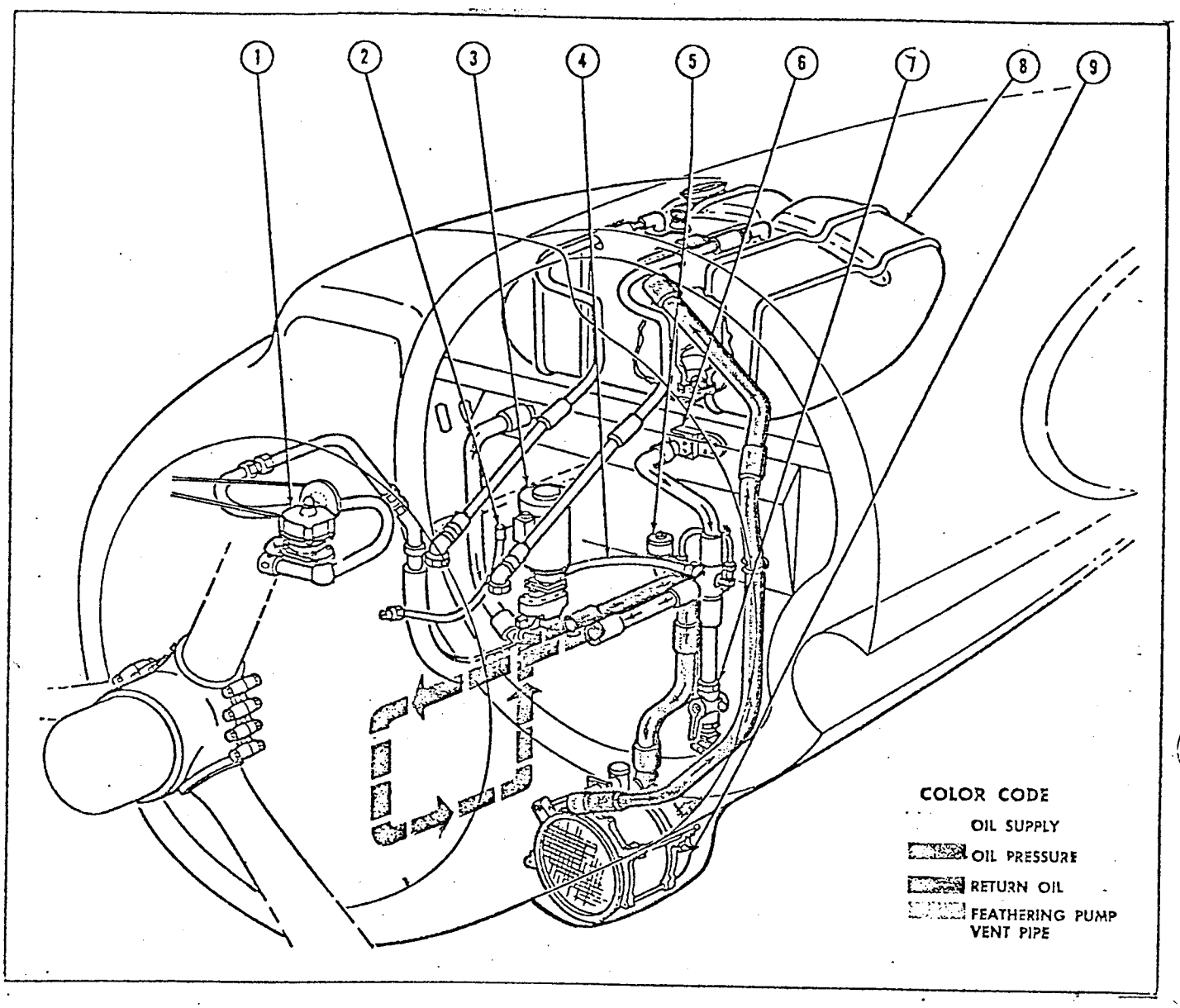

Figure 4-22. Original C-47 Oil System

33,634

Key to Figure 4-22.

Item	*Nomenclature*	*Item*	*Nomenclature*
1.	Hamilton Standard Propeller Governor	6.	Shutoff Valve
2.	Pressure Warning Switch	7.	Plug Drain Valve
3.	Propeller Feather Pump	8.	Oil Tank
4.	Feathering Pump Vent Pipe	9.	Oil Cooler
5.	Oil Dilution Solenoid Valve		

ered part of the electrical or instrument systems. The oil pressure indicator is of the direct-reading type.

Note

Normal oil temperature is 60° to 70°C. On some C-47 airplanes, a red warning light, installed on the instrument panel, indicates when the oil pressure drops below 50 psi.

4-89. OIL CONSUMPTION. Oil consumption varies with engine power settings used. An oil consumption limit that is satisfactory for maximum cruising power would be too high for low cruising power, or vice versa. In addition, one or more cylinders having high oil consumption could cause engine malfunctioning and still not be regarded as high engine oil consumption. The oil capacity per engine is 29 gallons, and the usable oil is approximately 25 gallons. *(See figure 4-21.)*

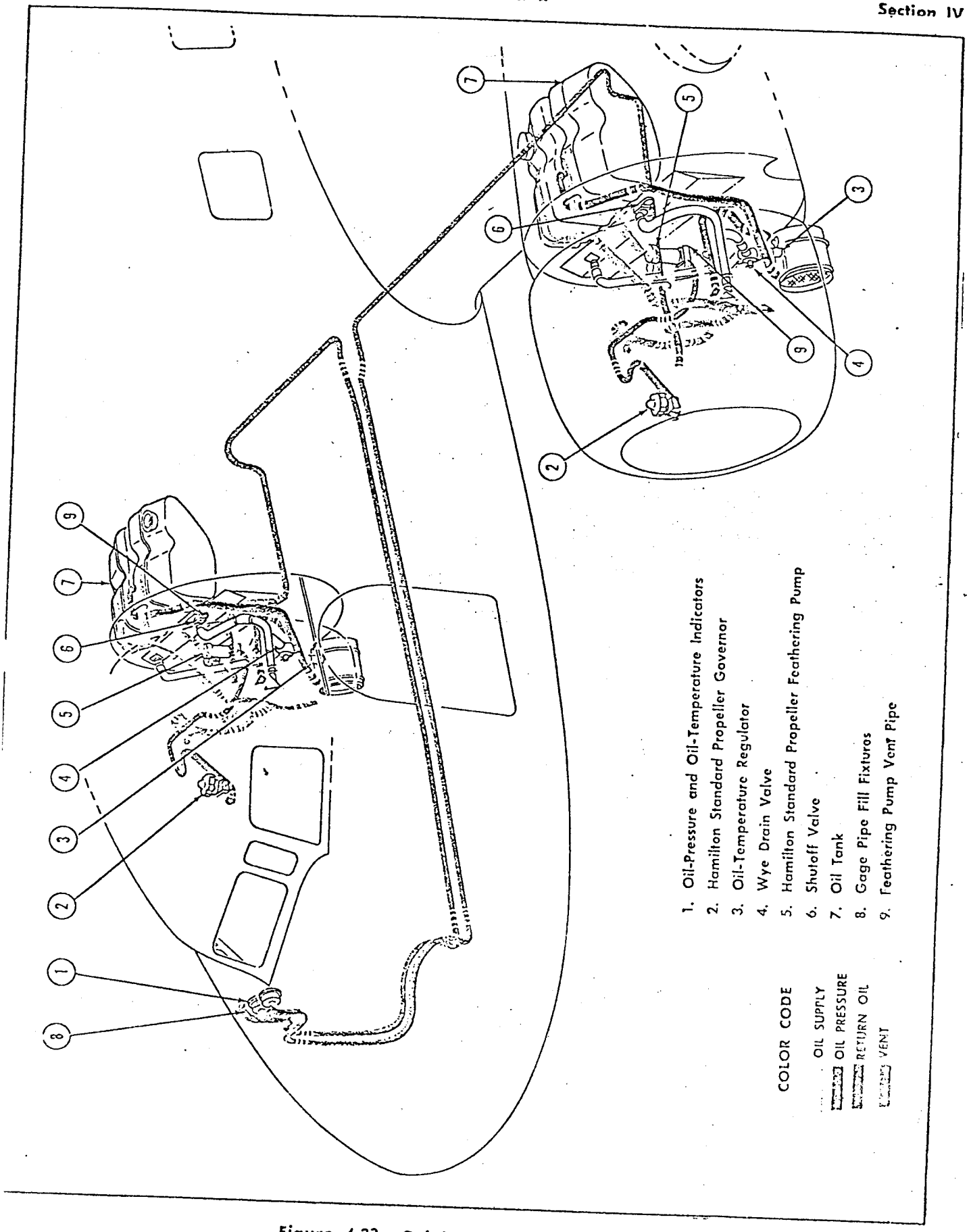

Figure 4-23. Original C-47A Oil System

33.635

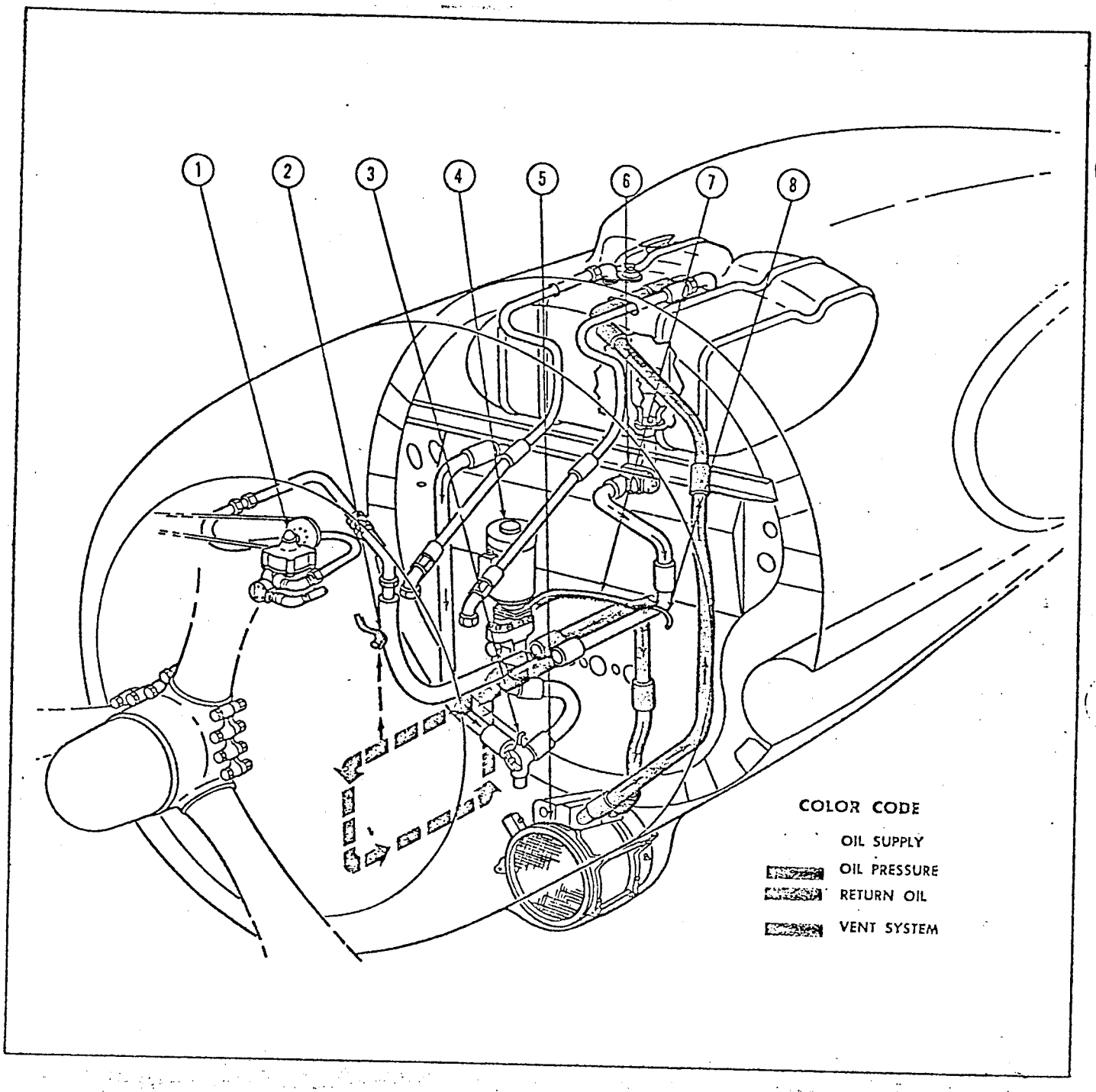

Figure 4-24. C-47A Oil System With Type D-8 Surge Valve

33,636

Key to Figure 4-24.

Item	*Nomenclature*	*Item*	*Nomenclature*
1.	Hamilton Standard Propeller Governor	5.	Oil Temperature Regulator
2.	Pressure Gage Pipe	6.	Shutoff Valve
3.	Wye Drain Valve	7.	Feathering Pump Vent Pipe
4.	Propeller Feathering Pump	8.	Oil Dilution Fuel Inlet

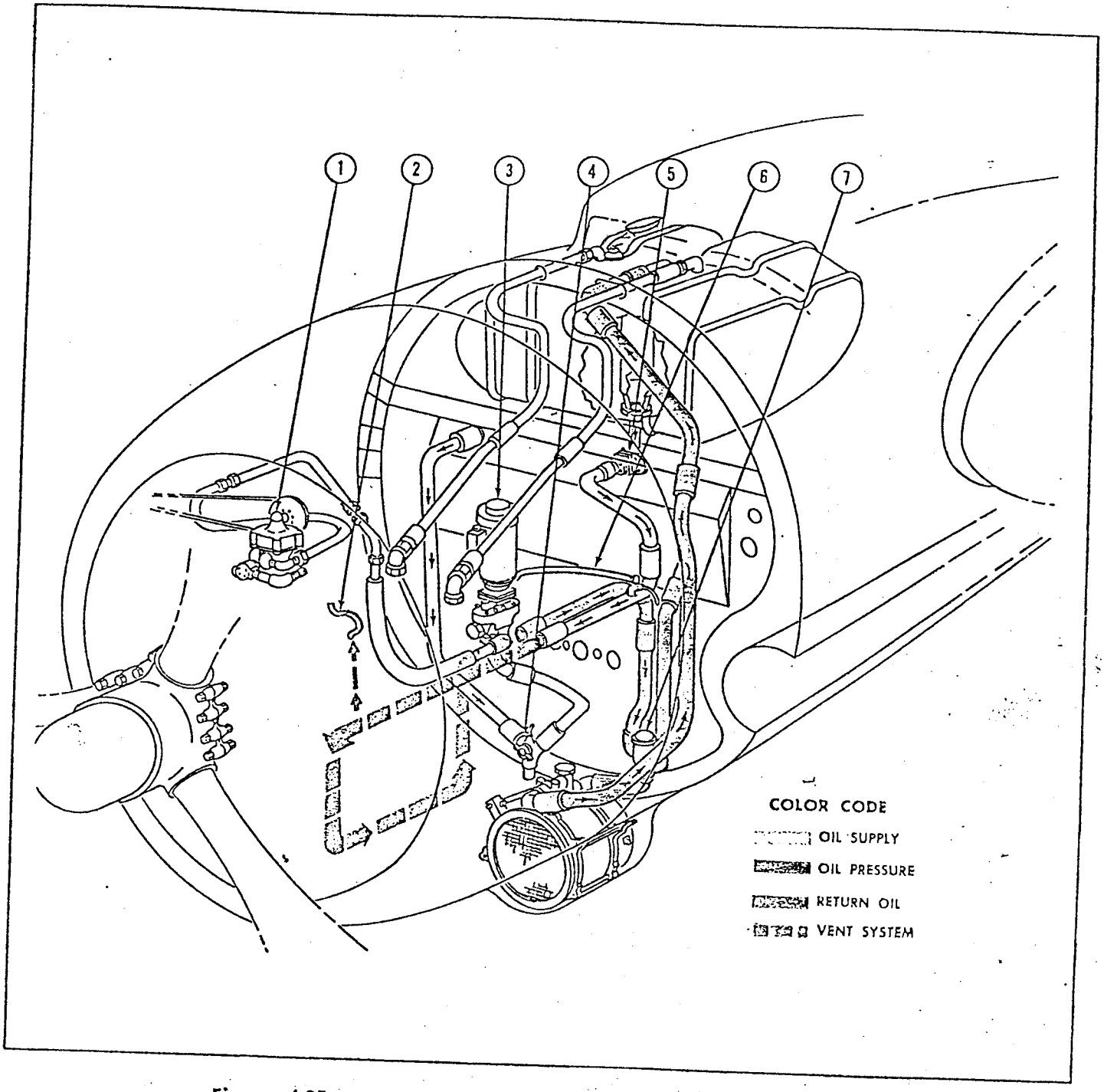

Figure 4-25. C-47A Oil System With Surge Valve on Firewall

33,637

Key to Figure 4-25.

Item	Nomenclature	Item	Nomenclature
1.	Hamilton Standard Propeller Governor	5.	Shutoff Valve
2.	Oil Pressure Gage Fitting	6.	Feathering Pump Vent Pipe
3.	Propeller Feathering Pump	7.	Oil Pressure Surge Valve
4.	Wye Drain Valve		

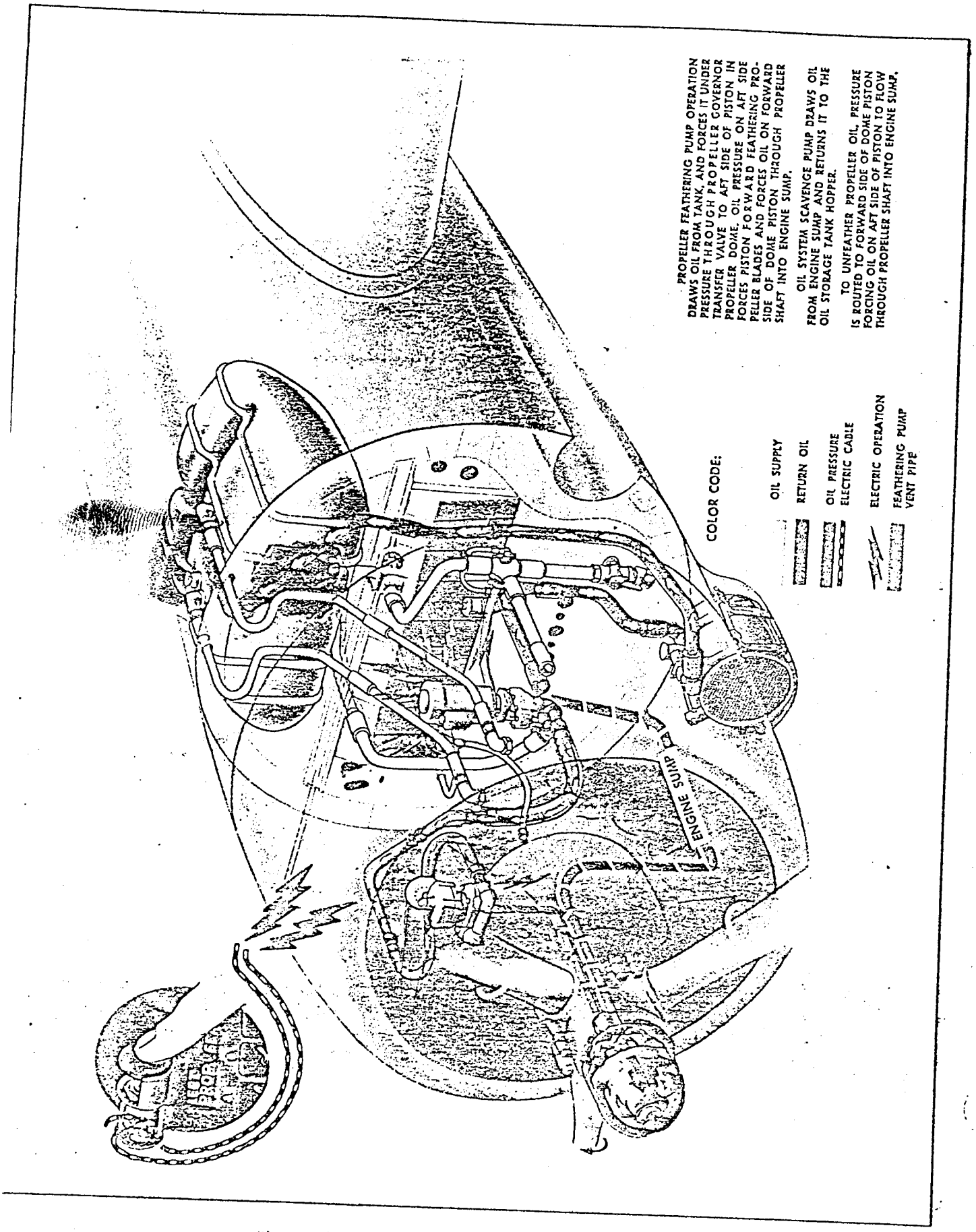

Figure 4-26. Propeller Feathering Oil System

33,633

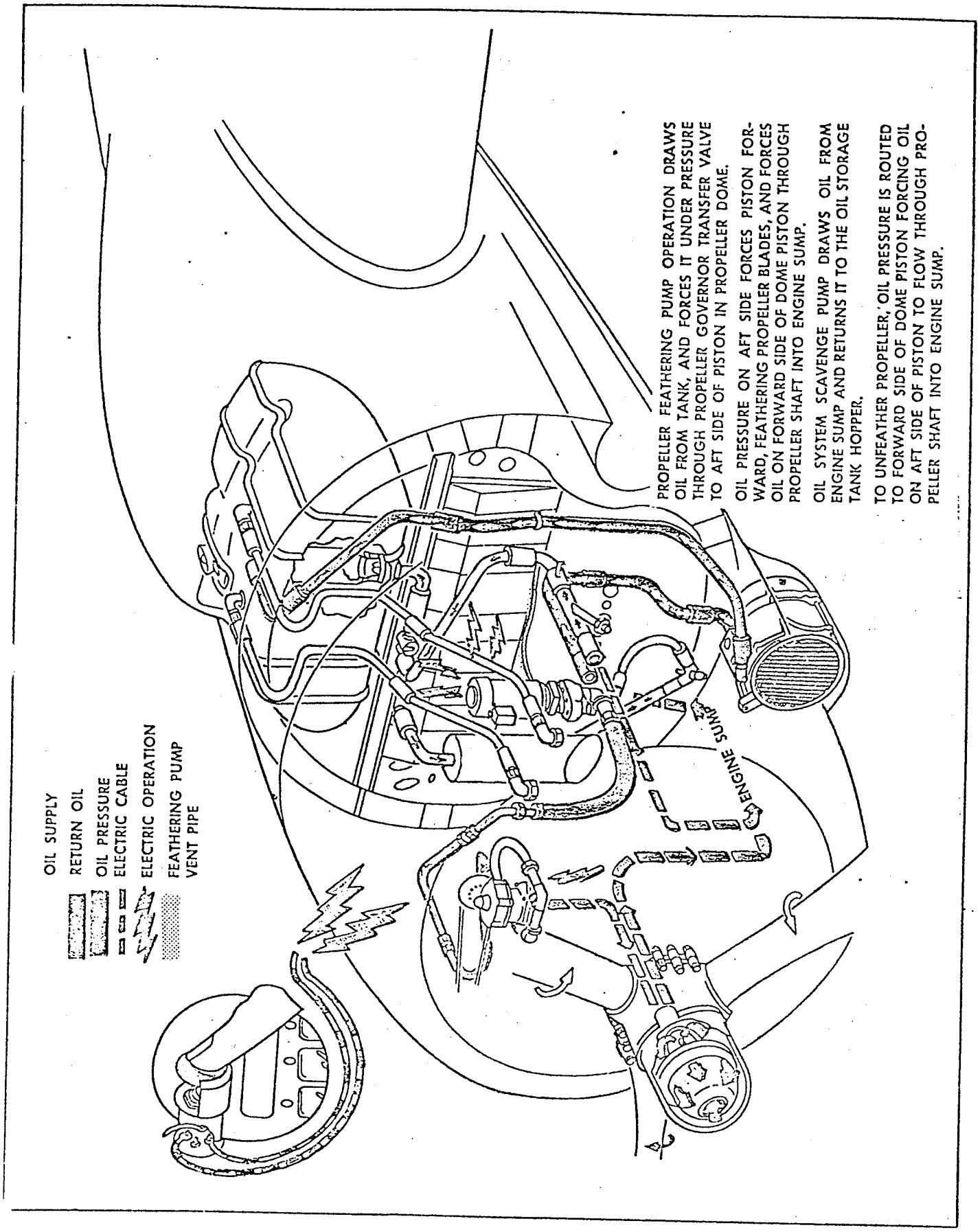

Figure 4-27. Oil Flow and Propeller Feathering System—(C-117 Airplanes)

33.677

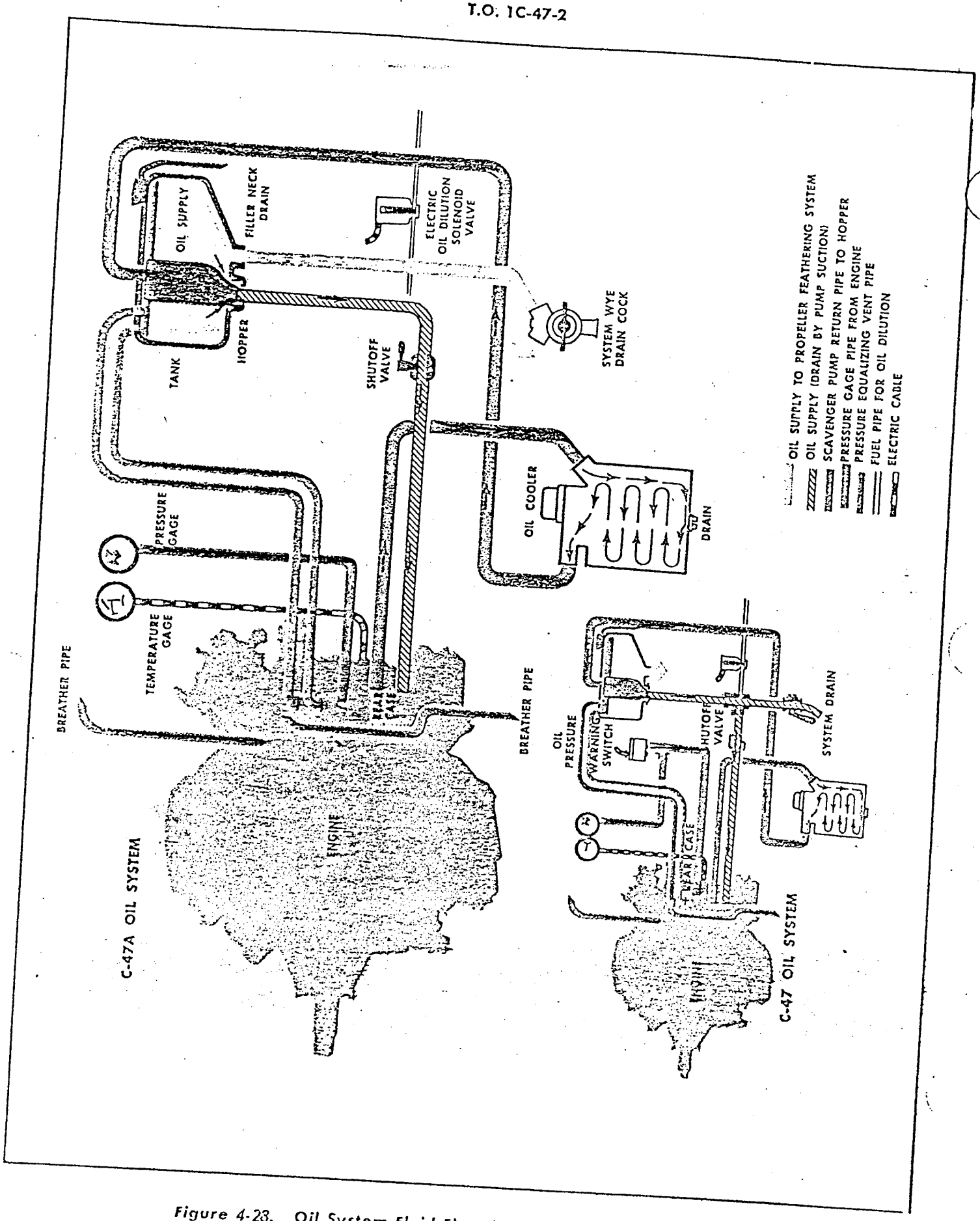

Figure 4-23. Oil System Fluid Flow (C-47 and C-47A Airplanes)

33.638

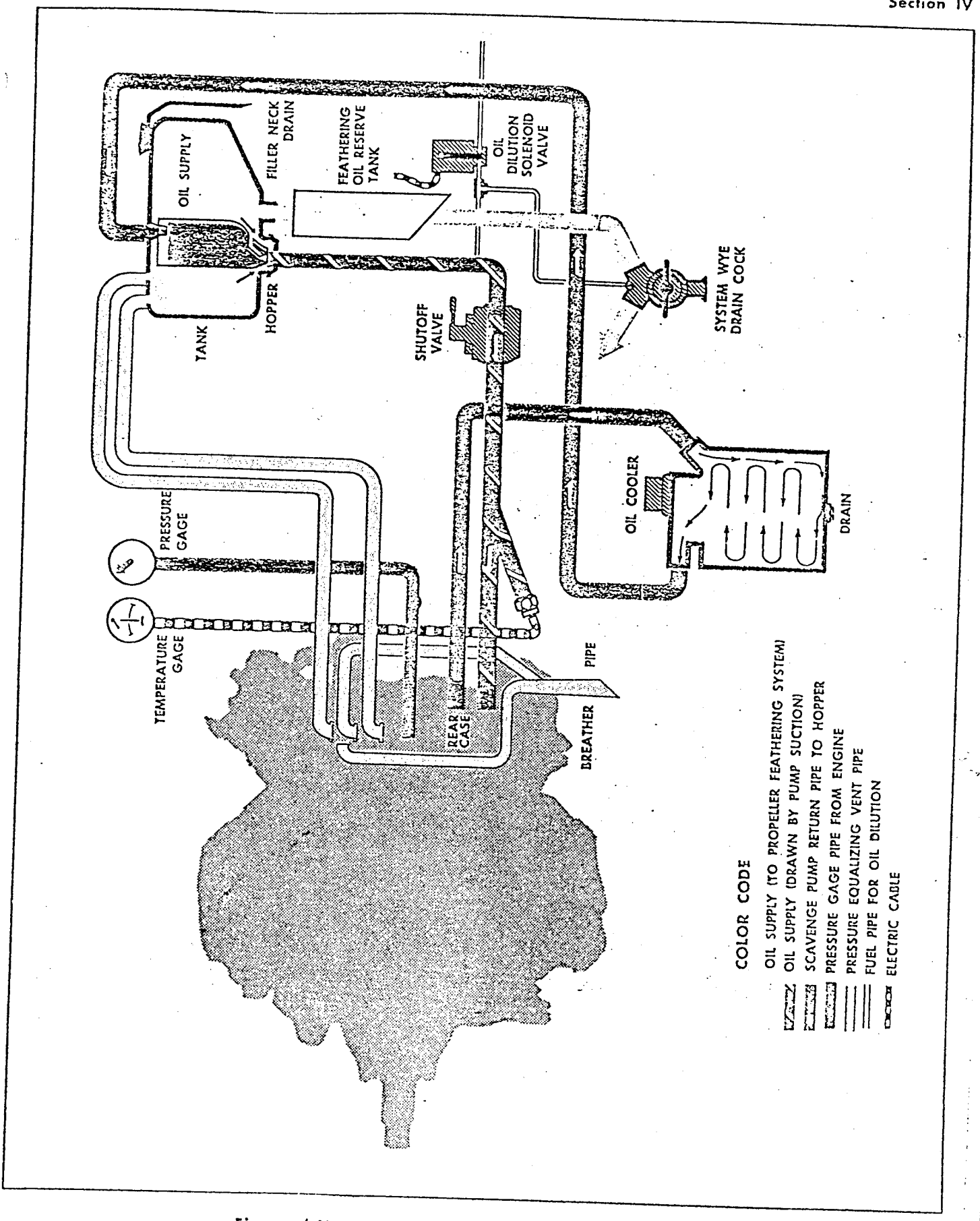

Figure 4-29. Oil System Fluid Flow (C-117 Airplanes)

33.639

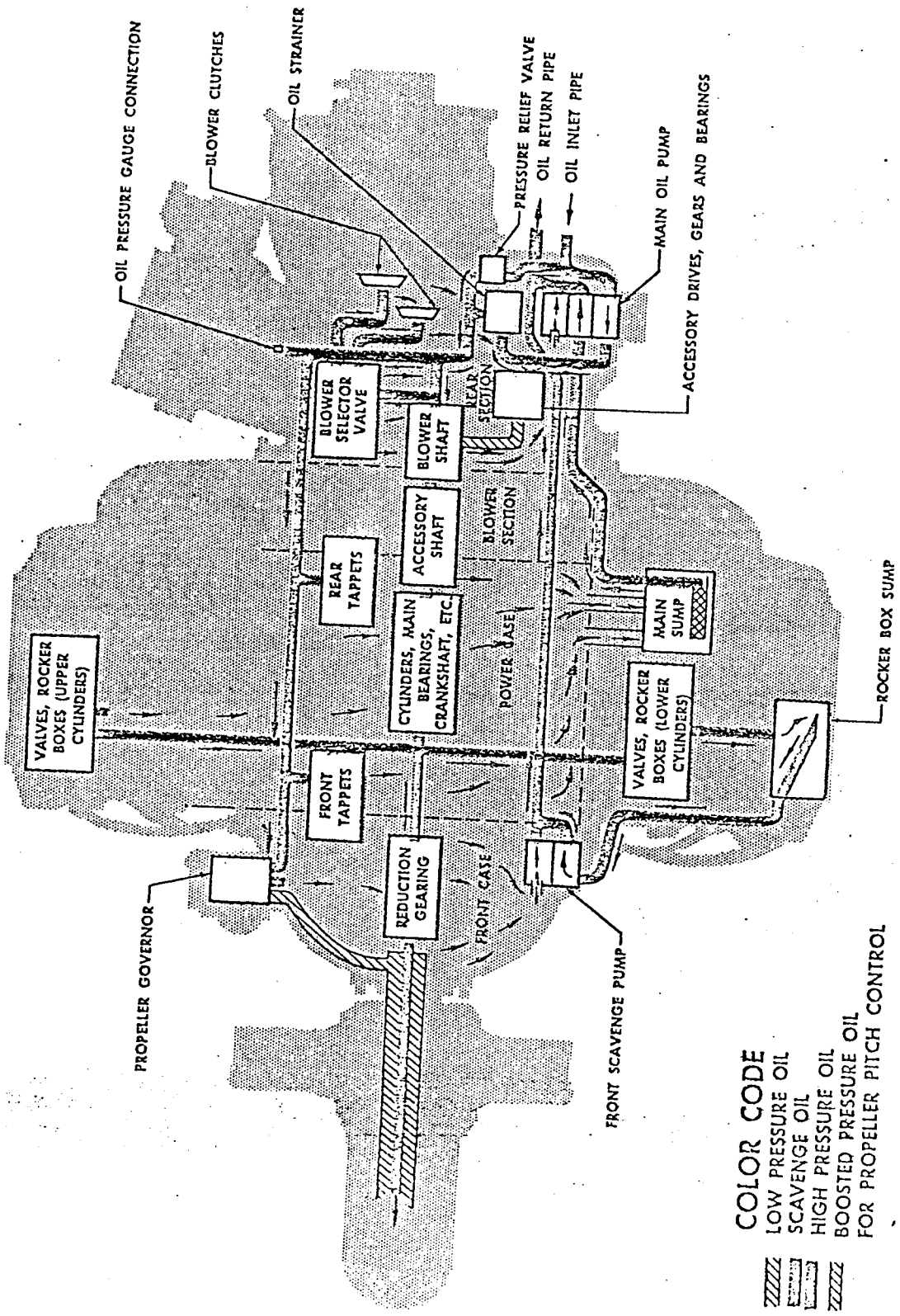

Figure 4-30. Engine Oil System Flow Chart (C-117 Airplanes)

33.640

Note

Usable oil in each oil tank is approximately 4 gallons less than the quantity of oil in the tank at the time of takeoff.

4-90. FILLING OF OIL SYSTEM (AFTER FLIGHT). The filler well is located on the inboard side of the carburetor airscoop and is covered with a cover plate. On some airplanes, the dipstick is fastened to the filler well cap. On other airplanes, the dipstick is located on top of the airscoop and is covered with a round access panel. On airplanes with the dipstick located on top of the airscoop, it is necessary to remove the carburetor air filter cover plate located on top of the airscoop aft of the dipstick, and pull the air filter out halfway to gain access to the dipstick. Gain access to the filler well and dipstick as applicable and service the oil tank as required.

4-91. FILLING OF OIL SYSTEM (AT ENGINE CHANGE).

a. Fill the system according to directions in paragraph 4-90.

b. Eliminate all air bubbles from the pipe leading from the propeller feathering pump to the governor as follows:

c. Disconnect the pipe at the propeller governor and hold a container beneath the disconnection.

d. Check and be sure the wye drain or the plug-type valve is closed; push in the applicable propeller feathering button located in the flight compartment, energizing the switch which starts the pump.

e. Watch for bubbles of air at the end of the disconnected pipe.

f. When all air bubbles have been eliminated, pull out the propeller feathering button, and again connect the pipe.

4-92. DRAINING OF OIL SYSTEM. Drain the oil system as outlined in the following steps.

Note

The oil should be warm for proper drainage.

a. Place a clean container under the wye drain; open the valve and drain the oil.

b. Open the drain valve on the sump of the oil tank and drain the sump.

c. Disconnect the propeller feathering pipe from the pump to the engine elbow pump connection.

d. Open the drain plug on the oil cooler and drain the oil into a container.

e. Replace and secure the plugs after draining has been completed.

4-93. MAIN OIL PUMP. *(See figure 4-34.)* A 3-section main oil pump assembly is located on the lower left side of the rear case section and includes one pressure section and two scavenge sections. One impeller gear of each section is keyed to the drive shaft and drives an impeller that is free to turn on an idler shaft. The idler shaft is pinned to the pump end plate. The outboard section supplies pressure oil to the engine while the inboard and center sections pick up oil from the rear case and the main sump; the pump is under pressure through an external pipe to the oil tank.

4-94. REMOVAL OF MAIN OIL PUMP.

a. Turn OFF the firewall shutoff valves.

b. Remove adequate cowling for oil pump accessibility.

c. Remove the fiber insert nuts attaching the main oil pump to the rear crankcase.

d. Loosen the pump by tapping the pump housing with a fiber hammer. Pull the pump down and remove it from the engine.

4-95. INSTALLATION OF MAIN OIL PUMP.

a. Prior to installation, thoroughly oil the pump and check that the position of the bevel gear is seated on the thrust face of the upper end plate.

b. Adjust the end gaps of the oil seal rings to prevent catching on the internal oil ports as the pump is installed.

c. Check that the gasket is in place and install the oil pump by carefully compressing each seal ring.

d. Install and tighten evenly the seven fiber insert nuts holding the oil pump to the rear crankcase.

e. Install the cowl panels.

f. Start and warm up the engine and check that the oil pressure rises immediately.

4-96. OIL STRAINER. The pressure oil strainer assembly, used in current and modified engines, consists of a body assembly which includes an oil-return check valve and a perforated central tube. A series of disc-shaped screens, which are separated alternately by stamped brass inlet and outlet spacers, is assembled around the perforated tube. The screens and spacers are secured in place by means of a support assembly

and plug. During cold weather operation, oil-screen assemblies P/N 134523 and P/N 134362 may be used in place of oil screen P/N 24701.

4-97. REMOVAL, MAINTENANCE, AND/OR INSTALLATION OF OIL STRAINER.

4-98. DISC-TYPE PRESSURE OIL STRAINER ASSEMBLY. *(See figure 4-31.)* The pressure oil strainer assembly, used in modified engines, consists of a body assembly which includes an oil-return check valve and a perforated central tube. A series of disc-shaped screens, which are separated alternately by stamped brass inlet and outlet spacers, is assembled around the perforated tube. The screens and spacers are secured in place by means of a support assembly and plug. During cold weather operation, oil screen assemblies P/N 134523 and P/N 134362 may be used in place of oil screen P/N 24701.

4-99. Considerable difficulty has been experienced with the disc-type pressure oil strainer assembly as used on the R-1830 engines, due to improper disassembly, cleaning, and reassembly.

4-100. REMOVAL OF PRESSURE OIL STRAINER ASSEMBLY.

a. Provide a suitable receptacle for collecting the oil.

b. Remove the four elastic stop nuts which hold the strainer cover in place.

CAUTION

It may be necessary to tap the cover with a rawhide mallet to break the gasket seal. Do not drive a screwdriver or similar tool under the cover, or damage to the machined surface will result.

c. Carefully lower the cover, strainer, retainer and spring without dropping any part.

d. Examine the oil strainer assembly and cover plug for the presence of metal chips or foreign matter.

4-101 DISASSEMBLY OF PRESSURE OIL STRAINER.
(See figure 4-32.)

a. Remove the lockwire and plug from the strainer assembly.

b. Slide the support, screens, and spacers onto a ¼-inch diameter rod approximately 18 inches long, which is provided with a means of preventing the parts from sliding off the rod during the cleaning process.

c. Loosen the screens from the spacers by sliding the parts along the rod.

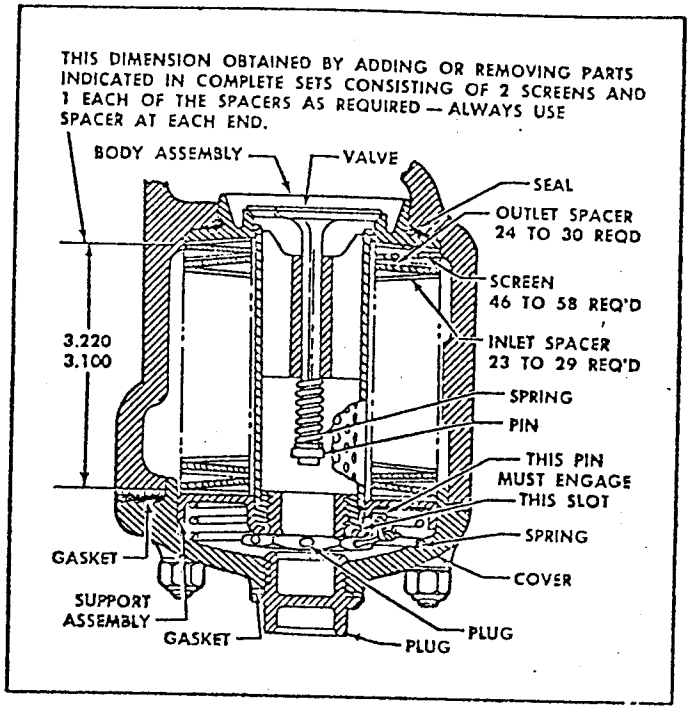

33,626

Figure 4-31. Oil Strainer Chamber — Modified Engines

4-102. CLEANING OF PRESSURE OIL STRAINER.

a. Immerse the screens in an approved carbon remover at room temperature for a few minutes.

b. Rinse in degreaser fluid and blow dry with an air jet.

c. Examine the screens for cleanliness. Repeat the cleaning operation if necessary.

d. Assemble strainer parts as soon as possible after cleaning, and dip in clean engine oil immediately after assembly.

4-103. ASSEMBLY OF PRESSURE OIL STRAINER.

a. Check the parts assembled on the cleaning rod to make sure they are properly arranged in the following order: outlet spacer, screen, inlet spacer, screen, and so on in the same order ending with an outlet spacer. Be sure there is an outlet spacer at each end.

b. Slide the spacers, screens, and support assembly from the cleaning rod onto the check valve body assembly.

c. Make certain that the lockpin in the support is in the body slot. Install the plate on the fixture so that the valve assembly is adequately supported.

d. Tighten the wingnut details on the rod until the spacers and screens cannot be turned by hand. Measure the assembled length between the body and the support. *(See figure 4-31.)*

e. If necessary, adjust the assembled length by adding or removing spacers and screens in sets until the correct dimension can be obtained. A set consists of an inlet spacer, an outlet spacer, and two screens.

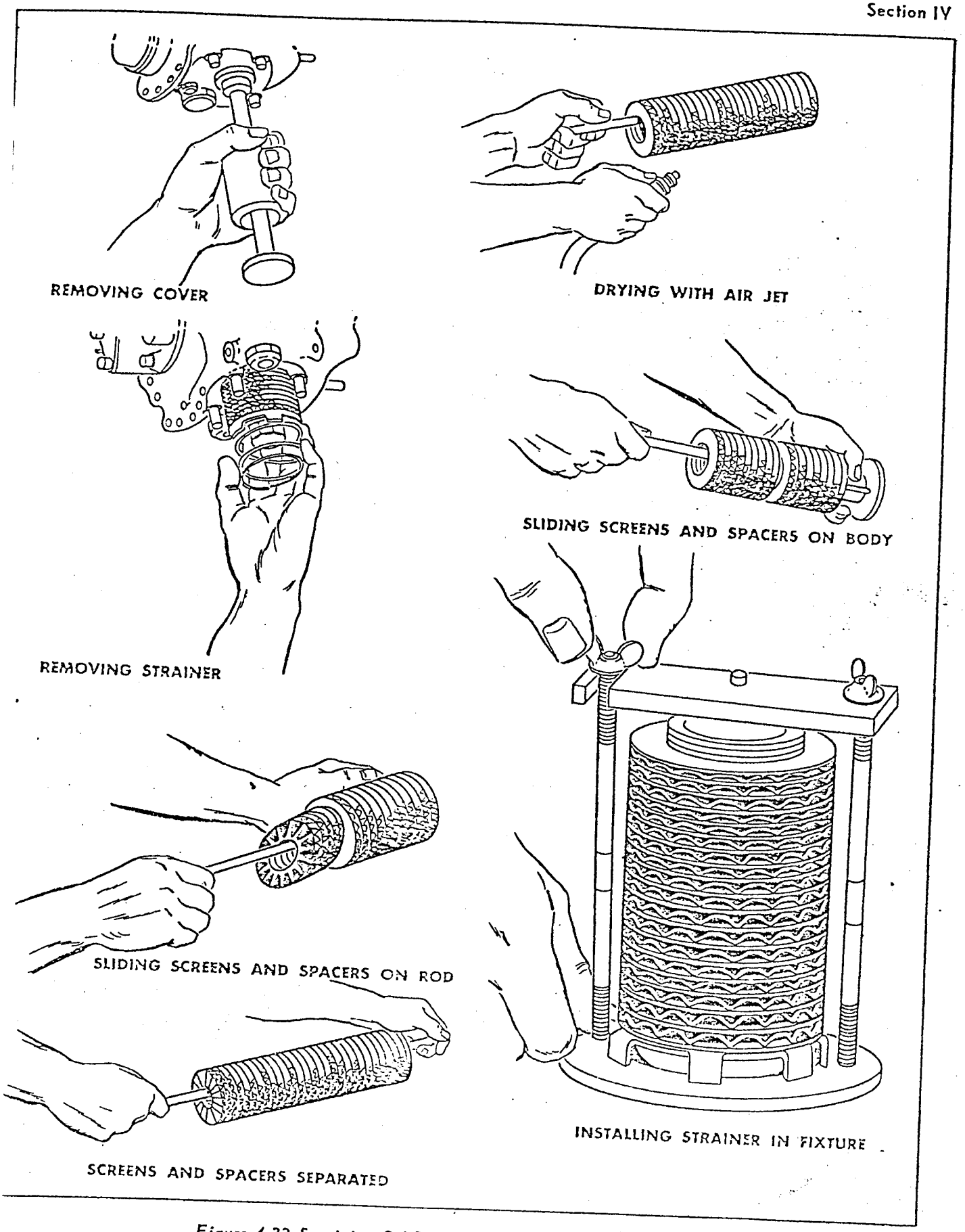

Figure 4-32. Servicing Oil Strainer Assembly (Sheet 1 of 2)

33.627

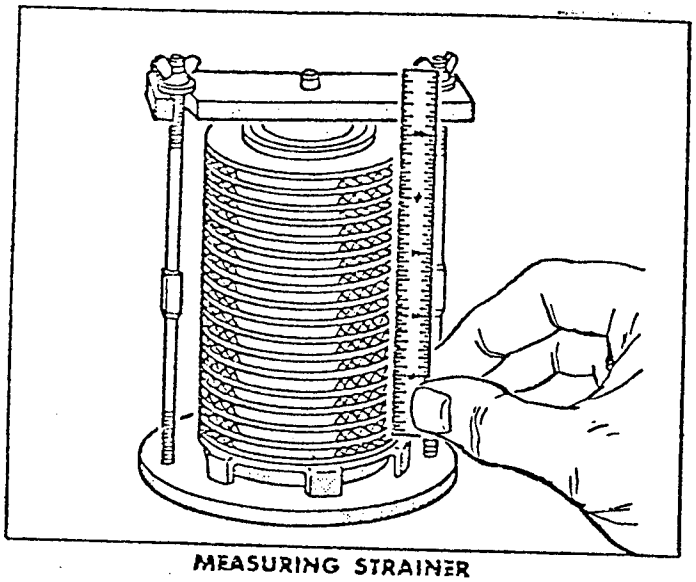

MEASURING STRAINER

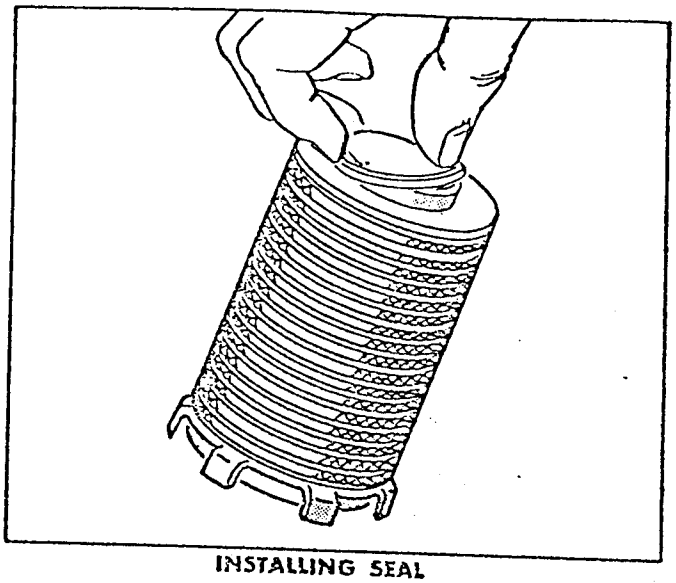

INSTALLING SEAL

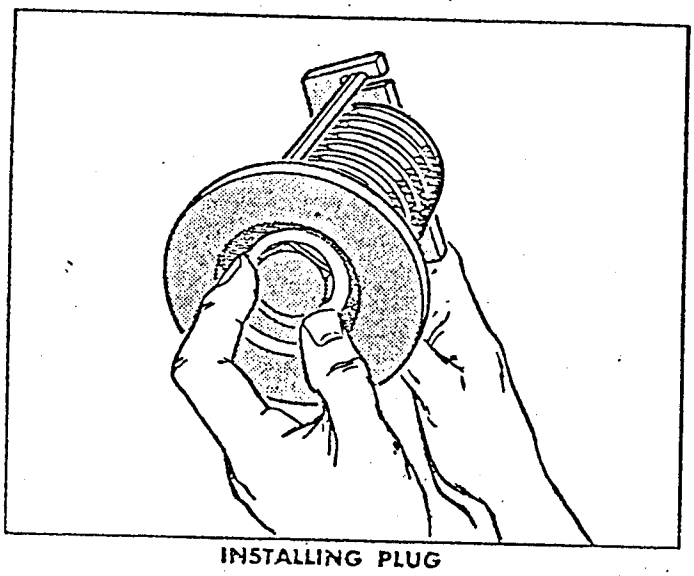

INSTALLING PLUG

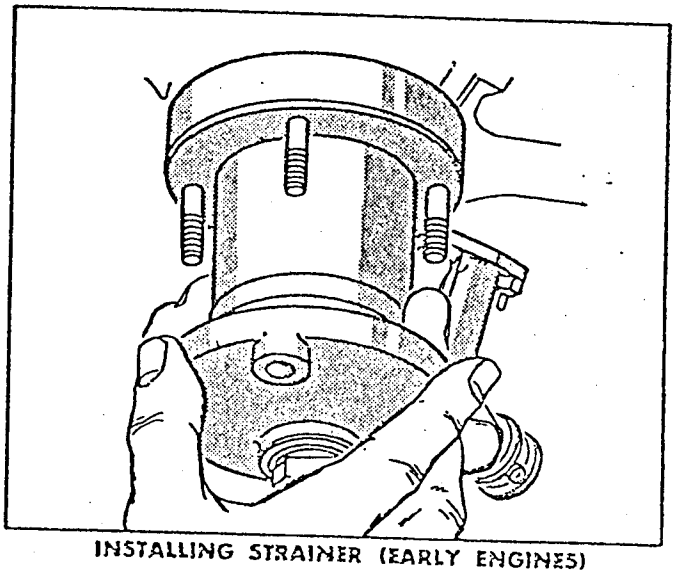

INSTALLING STRAINER (EARLY ENGINES)

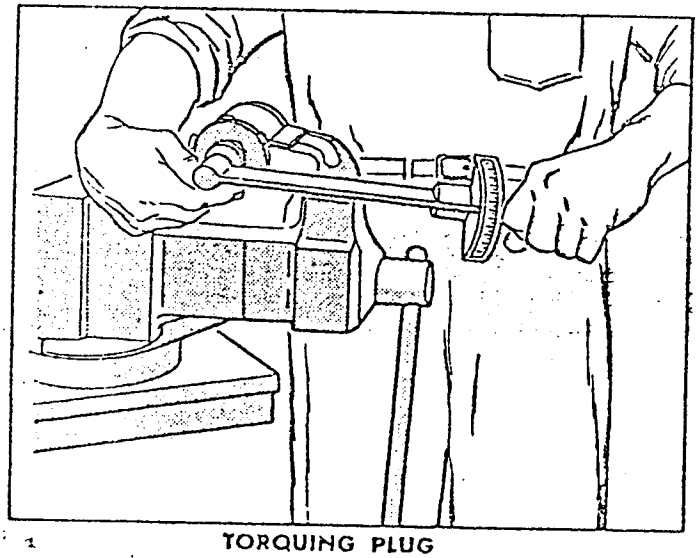

TORQUING PLUG

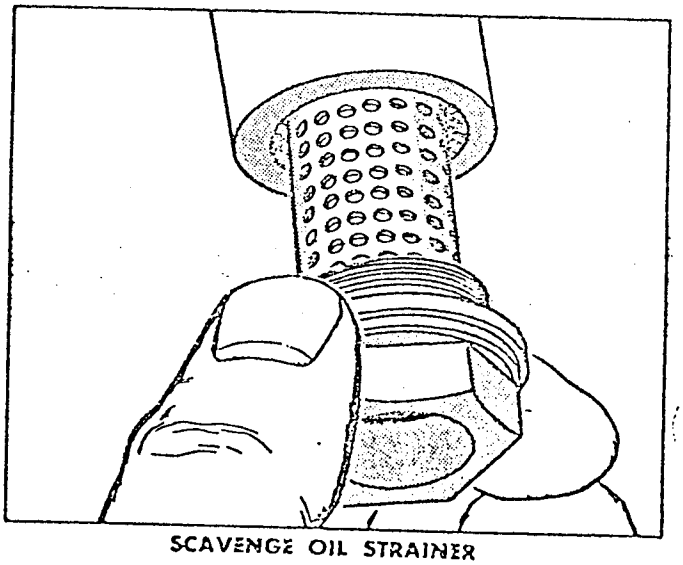

SCAVENGE OIL STRAINER

Figure 4-32. Servicing Oil Strainer Assembly (Sheet 2 of 2)

33.62B

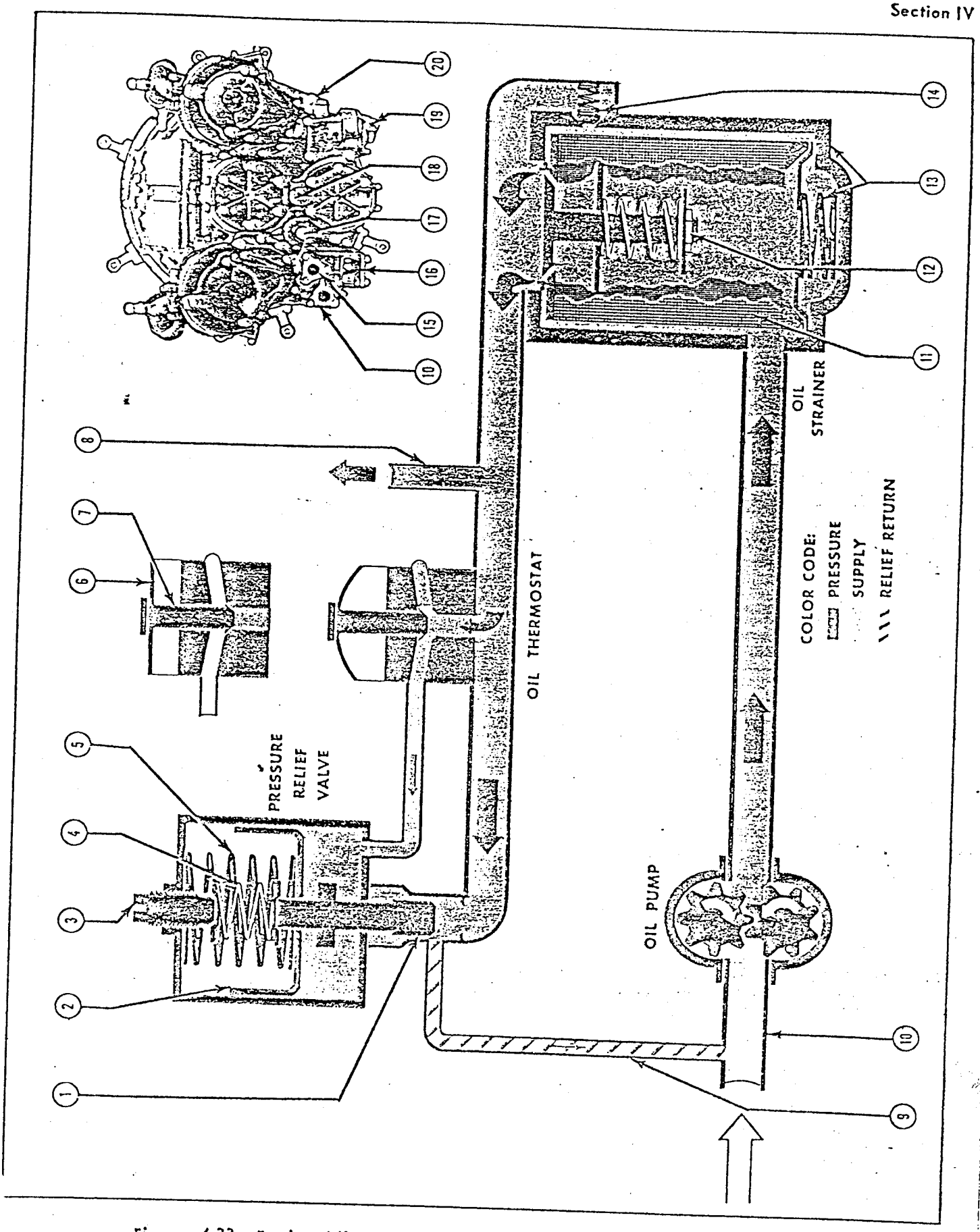

Figure 4-33. Engine Oil Pressure Relief System Schematic (C-47 Airplanes)

33.623

f. Screw the plug into the body sufficiently. Loosen the wingnuts and remove the assembly from the fixture. Lockwire the plug to the support assembly.

4-104. INSTALLATION OF PRESSURE OIL STRAINER ASSEMBLY.

a. Make certain that all of the oil gasket or seal is removed.

b. Install a new oil screen cover gasket.

CAUTION

Do not use more than one gasket.

c. Install a new seal in the annulus at the check valve end of the strainer assembly.

CAUTION

Make certain that the pilot end of the screen assembly is correctly positioned before installing the cover to avoid damage to the screen when the cover nuts are tightened.

d. Insert the oil strainer assembly in its cavity in the sump. Insert the screen with the oil seal ring end in first.

e. Place the retaining spring at the bottom of the screen.

f. Install the one square-cut corner of the cover pointing toward the center of the engine.

g. Screw the elastic stopnuts in place and tighten evenly.

-105. OIL PRESSURE RELIEF VALVE ADJUSTMENTS.

a. Remove the adjusting screw acorn cap with a ox wrench.

b. Loosen the locknut and turn the adjusting screw lockwise to increase, or counterclockwise to decrease he pressure.

c. Adjust to obtain an oil pressure of from 80 to 90 psi at an oil temperature of 60°C, and an engine speed resulting from operation at a manifold pressure equal to the field barometric pressure.

Note

It may be necessary to repeat this procedure several times before the desired pressure is obtained.

d. Tighten the adjusting screw locknut.

e. Install a new gasket and the acorn cap.

f. Safety the acorn cap with lockwire.

4-106. OIL STRAINER BYPASS VALVE. *(See figure 4-33.)* A bypass valve, located on the right side of the engine rear section and adjacent to the oil strainer chamber, allows continuous oil flow to the engine if the oil strainer becomes clogged, or the check valve sticks in the closed position. The valve is spring-loaded to 7 to 8 pounds.

4-107. REMOVAL OF OIL STRAINER BYPASS VALVE.

a. Unscrew the oil strainer bypass valve from the oil strainer chamber.

b. Remove in sequence order: the gasket, spring cap, spring, gasket, and plunger.

4-108. MAINTENANCE OF OIL STRAINER BYPASS VALVE.

a. Remove the scratches from the plunger with crocus cloth and oil.

b. Replace the spring if tension is doubtful.

4-109. INSTALLATION OF OIL STRAINER BYPASS VALVE.

a. Assemble the valve in sequence order: the valve body, plunger, new gasket, spring, spring cap, new gasket, and cover.

b. Install the valve assembly with a new gasket in the opening of the rear crankcase.

Key to Figure 4-33.

Item	Nomenclature	Item	Nomenclature
1.	Pressure Relief Valve	11.	Oil Strainer Screens
2.	Temperature Compensating Piston	12.	Oil Return Check Valve
3.	Pressure Relief Adjustment Screw	13.	Oil Strainer Chamber Cover and Spring
4.	Pressure Relief Spring	14.	Oil Strainer Bypass Valve
5.	Temperature Compensating Piston Spring	15.	Oil Outlet Port
6.	Thermostat	16.	Oil Pressure Pump
7.	Thermostat Needle Valve	17.	Oil Pressure Relief Valve and Temperature Compensating Piston
8.	Pressure Oil to Engine Parts	18.	Oil Thermostat
9.	Relief Return Oil (to inlet port)	19.	Oil Strainer Chamber
10.	Oil Inlet Port	20.	Oil Strainer Bypass Valve

c. Tighten the valve assembly in the rear crankcase by using a wrench on the hex nut of the valve body.

d. Secure with safetywire.

4-110. OIL PRESSURE RELIEF VALVES. *(See figures 4-33 and 4-35.)* Two types of oil pressure relief valves are installed on C-47 airplanes, the compensating type and the noncompensating type. Generally, C-47, C-47A, and some C-47B airplanes are equipped with a compensating-type valve while noncompensating types are installed on late C-47B, C-47D, and all C-117 airplanes. Both types are described in the following paragraphs.

4-111. COMPENSATING-TYPE OIL PRESSURE RELIEF VALVES. Prior to the oil flowing into the cylinder of the oil pressure relief valve, the oil is routed to the thermostat installed on C-47 airplanes and located in the center of the rear section. The bimetallic thermostat is closed during cold operation, but opens when the oil temperature reaches 40°C (104°F) and causes the oil to pass into the compensating-type relief valve cylinder.

4-112. The oil pressure compensating-type relief valve assembly, located on the left side of the rear crankcase, is held in the closed position by the pressure relief spring and the spring-loaded temperature compensating piston. When the oil temperature is lower than 40°C, both springs hold the pressure relief valve closed against an oil pressure of approximately 400 psi. The oil thermostat opens when oil temperature reaches 40°C and oil is admitted into the pressure relief valve cylinder, raising the compensating piston and compressing the compensating piston spring. When the piston is raised from the shoulder on the relief valve stem, only the relief valve spring holds the valve closed. The normal operating temperature of engine oil is 40°C. The relief valve will open at 90 psi and normally raise the compensating piston. Oil is returned to the engine oil system when the relief valve is unseated between the oil inlet port and the main oil pump. Three operational steps are performed by this combination of pressure-temperature relief valves.

a. Cold oil at engine start often reaches a momentary pressure of approximately 300 psi. Since both the pressure relief spring and the temperature-compensating spring hold the relief valve closed to any pressure less than 400 psi, oil is forced through the engine, speeding up normal operating temperature.

b. When oil reaches the normal operating temperature of 40°C, the thermostatic needle valve is opened and the temperature-compensating piston is raised.

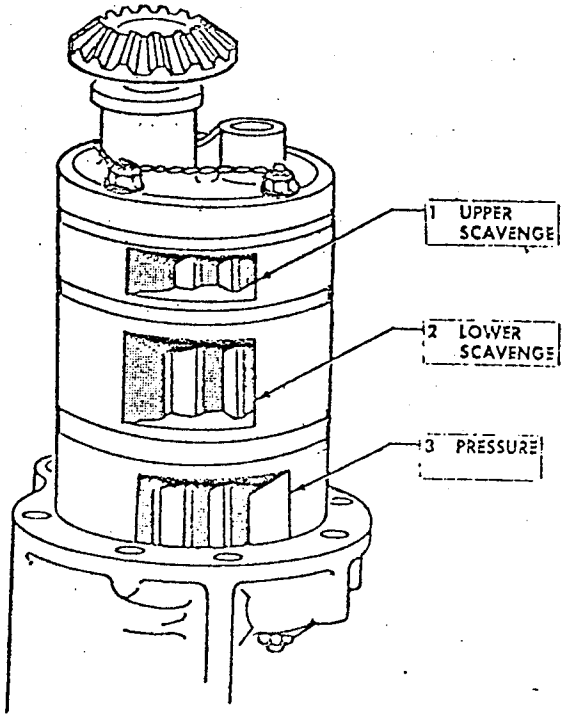

Figure 4-34. Main Oil Pump

33,624

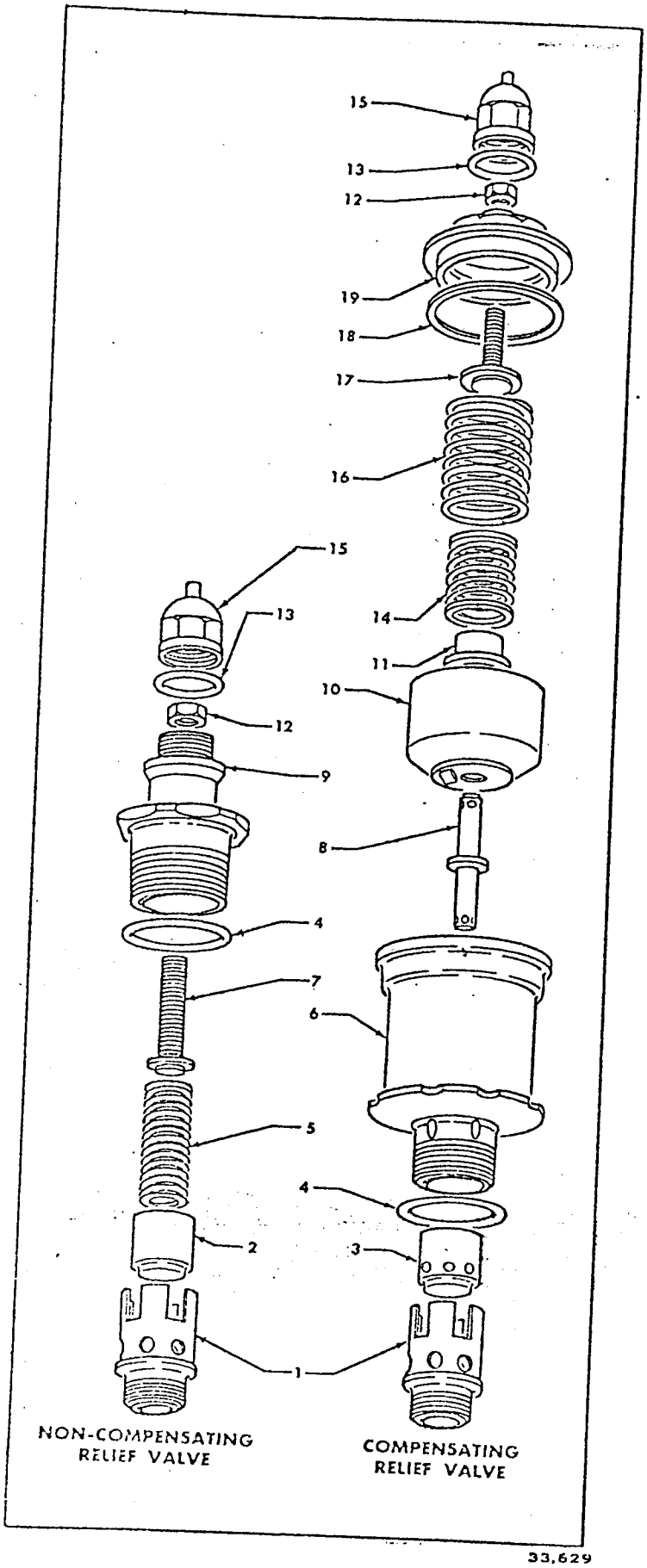

Figure 4-35. Oil Pressure Relief Valves

c. When the condition in step b is attained, only the pressure relief valve is closed. Any pressure above the normal operating pressure of 90 psi unseats the valve and lowers the oil pressure. An adjustment screw permits the tension of the relief valve spring to be regulated; adjustment must be made during the first ground run-in operations of a new engine and must not be changed.

4-113. REMOVAL OF COMPENSATING-TYPE OIL PRESSURE RELIEF VALVE.

a. Remove the safetywire from the base of the valve housing.

b. Remove the valve assembly, using a PWA-1541 wrench.

c. Remove the compensating relief valve plunger from the valve body which is secured into the rear crankcase.

d. Remove the valve body from the rear crankcase using a PWA-1604 wrench.

e. Remove the cover from the relief valve housing, using a PWA-977 wrench for holding the cover, and a PWA-1604 wrench for holding the housing.

Note

Exercise care in removing the cover from the relief valve housing, as this cover is under spring pressure.

f. After removing the cover, remove the compensating-type relief valve spring with the inner spring guide and the piston spring.

Key to Figure 4-35.

Item	*Nomenclature*
1.	Body
2.	Plunger
3.	Plunger
4.	Gasket
5.	Spring
6.	Housing
7.	Screw-Oil Pressure Relief Adjusting
8.	Valve
9.	Housing – Oil Pressure Relief Valve
10.	Piston Assembly
11.	Guide
12.	Nut – Plain, Oil Return Check Valve
13.	Gasket
14.	Spring
15.	Cap
16.	Spring – Compensating Relief Valve Piston
17.	Screw – Compensating Relief Valve Adjusting
18.	Gasket
19.	Cover

g. Remove the piston assembly and the piston stem.

h. Remove the compensating-type relief valve cap housing, adjusting screw, and the lock nut.

4-114. MAINTENANCE OF COMPENSATING-TYPE OIL PRESSURE RELIEF VALVES.

a. Examine all parts for wear, specifically checking the relief valve body valve seat, the plunger seat, and the piston stem. Replace all worn parts.

b. Check the springs for proper tension.

c. Remove sharp edges from the outer edges of the piston and from the drilled holes in both ends of the piston stem. Use a small round file, or stone off sharp edges from the outer edges of the piston stem bore in the housing.

d. Check the regulator valve plunger for a minimum clearance of 1/32 inch from the outer shoulder of the plunger to the bottom of the holes in the plunger body.

e. Wash and clean all parts thoroughly, and dry with compressed air. Lubricate all parts with clean oil and place in a tray, avoiding nicking and scratching the machined surface areas.

4-115. INSTALLATION OF COMPENSATING-TYPE OIL PRESSURE RELIEF VALVE.

a. Install the compensating-type relief valve body in the rear crankcase housing and tighten with a PWA-1604 wrench.

b. Lubricate and install the relief valve plunger in the relief valve body.

c. Install the compensating relief valve assembly and tighten with a PWA-1437 wrench. The gasket under the relief valve housing must be in place.

4-116. ADJUSTMENT OF COMPENSATING-TYPE OIL PRESSURE RELIEF VALVE. For information concerning the adjustment of the oil pressure relief valve, refer to Section V.

4-117. NONCOMPENSATING-TYPE OIL PRESSURE RELIEF VALVES. On the majority of C-47 airplanes, the use of the compensating oil pressure relief valve and the time-delay control valve have been discontinued. This type is replaced by a simplified noncompensating-type relief valve which eliminates the need of a thermostatic time-delay control valve. Airplanes equipped with the noncompensating relief valve re also equipped with a thermocontrol replacement lug. In order that the compensating and noncompensating oil pressure relief valves can be interchangeable n crankcases provided with a recess for the thermostatic time-delay control valve, a P/N 27867 thermostatic valve must be installed. If a serviceable thermostatic valve is not available, use a P/N 57788 plug spacer and a noncompensating relief valve. The compensating relief valve can only be used in conjunction with the thermostatic valve, while the noncompensating relief valve can be used with either the thermostatic valve or the plug spacer.

Note

Do not under any circumstances, install a compensating relief valve in a crankcase which does not provide for the thermostatic control valve.

4-118. REMOVAL OF NONCOMPENSATING-TYPE OIL PRESSURE RELIEF VALVE.

a. Unscrew the oil pressure relief valve housing and lift out the spring and the valve.

b. Unscrew the valve body from the rear crankcase, using a PWA-1604 wrench.

c. Unscrew the acorn cap from the oil pressure relief valve housing.

d. Loosen and remove the adjusting screw lock nut and the adjusting screw.

e. Wash the parts thoroughly in solvent, Federal Specification P-S-661, and place in a suitable container to prevent damage from contact with other metal parts.

4-119. MAINTENANCE OF NONCOMPENSATING-TYPE OIL PRESSURE RELIEF VALVE.

a. Inspect the valve body and plunger for nicks, wear, and damage to the valve body threads.

b. Replace the valve assembly if the valve body or valve plunger seat shows excessive wear.

c. Remove all minor nicks and scratches by stoning and polishing with crocus cloth and oil.

4-120. INSTALLATION OF NONCOMPENSATING-TYPE OIL PRESSURE RELIEF VALVE.

a. Install the valve and plunger body in the rear crankcase, using a PWA-1604 wrench.

b. Install the plunger in the valve body.

c. Assemble the adjusting screw and locknut to the oil pressure relief valve housing.

d. Install the relief valve spring, pushing it into position against the flange of the adjusting screw.

e. Place the gasket on the housing and screw the housing into the rear crankcase; check that the relief

valve spring is centered in the plunger. The gasket must be in proper position.

4-121. ADJUSTMENT OF NONCOMPENSATING-TYPE OIL PRESSURE RELIEF VALVE. The adjustment procedure for the noncompensating-type relief valve is identical with that of the compensating-type relief valve. (Refer to Section V.)

4-122. MAIN OIL SUMP. *(See figure 4-36.)* The main oil sump is located between cylinders No. 7 and No. 9, and collects oil drained from moving parts within the main crankcase and the rear cam compartment. The oil in this sump is scavenged through an oil screen, a pipe in the bottom of the blower section, and a series of cored passages in the accessory section to the oil outlet port. This oil is scavenged by the middle section of the main oil pump.

4-123 REMOVAL OF MAIN OIL SUMP.

a. Remove the oil scavenge pipe from the main oil sump and the oil pump.

b. Use a ½-inch socket wrench and an extension handle to remove the bolt which secures the sump to the support bracket on the rear crankcase.

c. Loosen, but do not remove, the three nuts which secure the rear of the sump to the blower section.

d. Loosen the sump using a puller; remove the puller and the previously loosened nuts. Lift out the sump holding the rubber seals, inserts, and the spring on the drain tubes; otherwise they will slide off when the sump is removed.

e. Remove the seals, inserts, and springs.

4-124. MAINTENANCE OF MAIN OIL SUMP.

a. Clean the sump thoroughly and check for cracks, mutilated stud holes, damaged flanges, or plug threads. Check for condition of the painted surface. The mounting surface must be clean and free from mutilation.

b. On welded aluminum-type sumps, remove dents and check for cracks after dents have been removed.

c. Examine the sump for metal particles or other foreign matter. Metal chips indicate a probable engine failure, and if they are numerous, the sump screen must be removed and inspected.

4-125. INSTALLATION OF MAIN OIL SUMP.

a. Install the sump spring, spacer, and a new rubber oil seal ring in the order stated on each rear main crankcase oil drain tube.

b. Install the oil strainer and the plug assembly in the front of the sump using a new gasket under the plug.

c. Place a new gasket on the blower section mounting pad and install the sump in position, securing it to the blower section with the three washers and nuts.

d. Tighten the nuts on the studs and secure with pal nuts.

e. Install the oil drain plug into its insert at the bottom of the sump, using a PWA-1787 wrench, and safetywire the plug.

4-126. ROCKER-BOX DRAIN SUMP. *(See figures 4-37 and 4-38.)* The rocker-box drain sump is located between the rocker boxes of cylinder No. 8. Oil drains into this sump from the engine's valve mechanisms and is scavenged by the front scavenge pump.

4-127. REMOVAL OF ROCKER-BOX DRAIN SUMP.

a. Remove the nuts and screws which secure the oil suction and breather pipe assembly to the reduction gear housing and the rocker-box oil sump. Lift off the pipe assembly.

b. Withdraw the pipe assembly adapter from the reduction gear housing.

c. Remove the two plugs from the rear of the rocker-box covers on cylinder No. 8.

d. Unscrew the two hollow supports, using a PWA-2210 wrench.

e. Remove the nuts which secure the rocker-box covers to the No. 7 and No. 9 exhaust rocker housing.

f. Remove the two fillister-head screws which fasten the sump to the rocker shafts of cylinder No. 8.

g. Lift the sump from the engine together with the attached No. 7 inlet and No. 9 exhaust rocker covers.

4-128. MAINTENANCE OF ROCKER-BOX DRAIN SUMP. Refer to the maintenance procedure for the main oil sump as outlined in paragraph 4-124.

4-129. INSTALLATION OF ROCKER-BOX DRAIN SUMP.

a. Install the rocker-box sump together with the No. 7 inlet and No. 9 exhaust rocker-box covers to cylinder No. 8 head.

b. Install the washer and rubber packing on the inner end of each hollow support stud.

c. Screw the two sump supports into position through the rocker-box covers of cylinder No. 8, using a PWA-2210 wrench.

d. Install a cover plug and gasket in each rocker-box cover of cylinder No. 8.

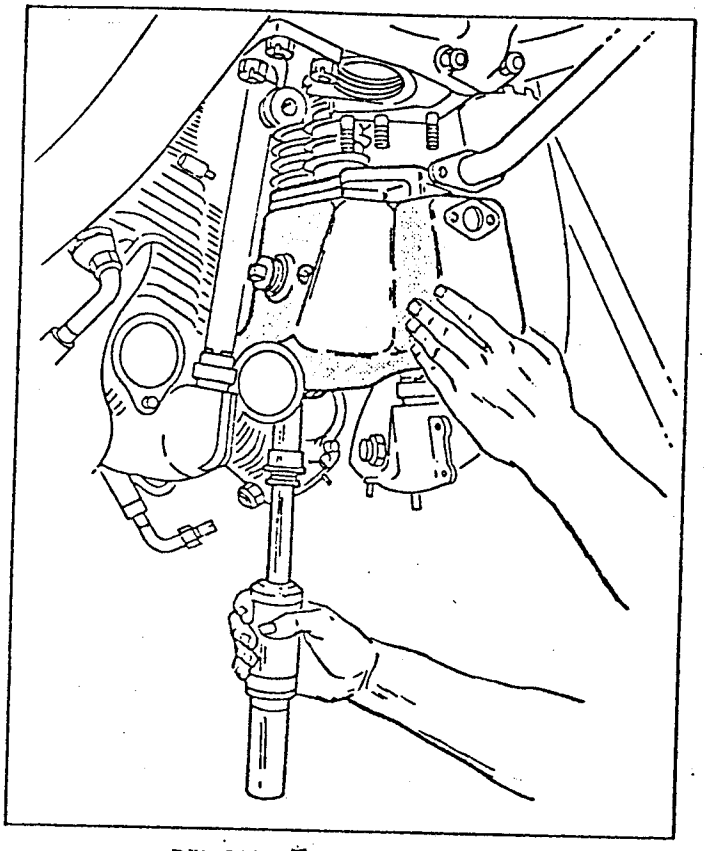

REMOVING SUMP

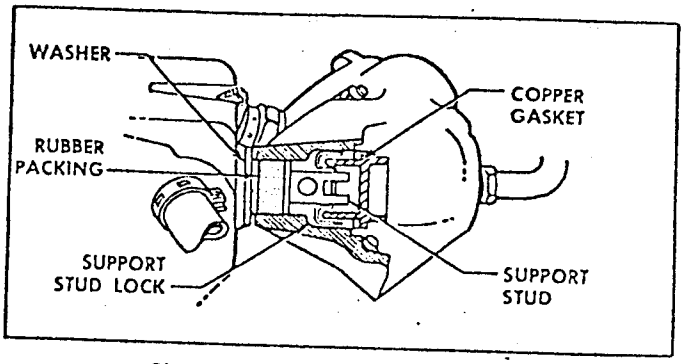

SUMP SUPPORT TUBE

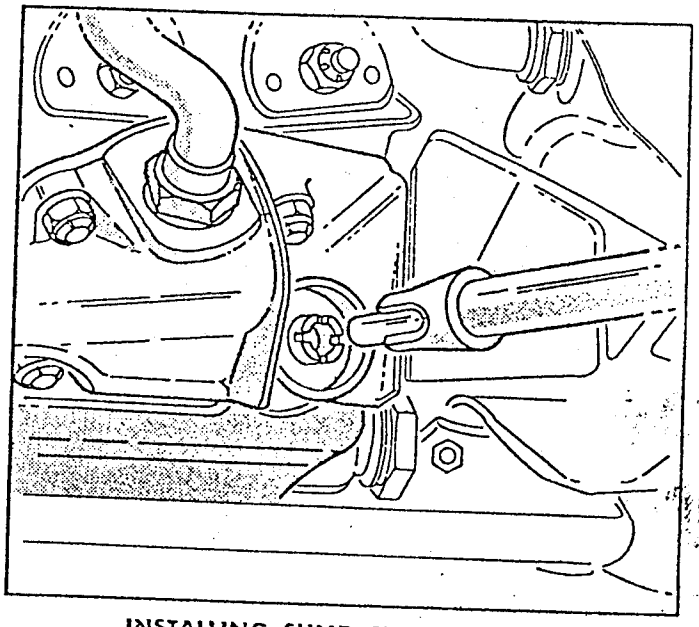

INSTALLING SUMP SUPPORT

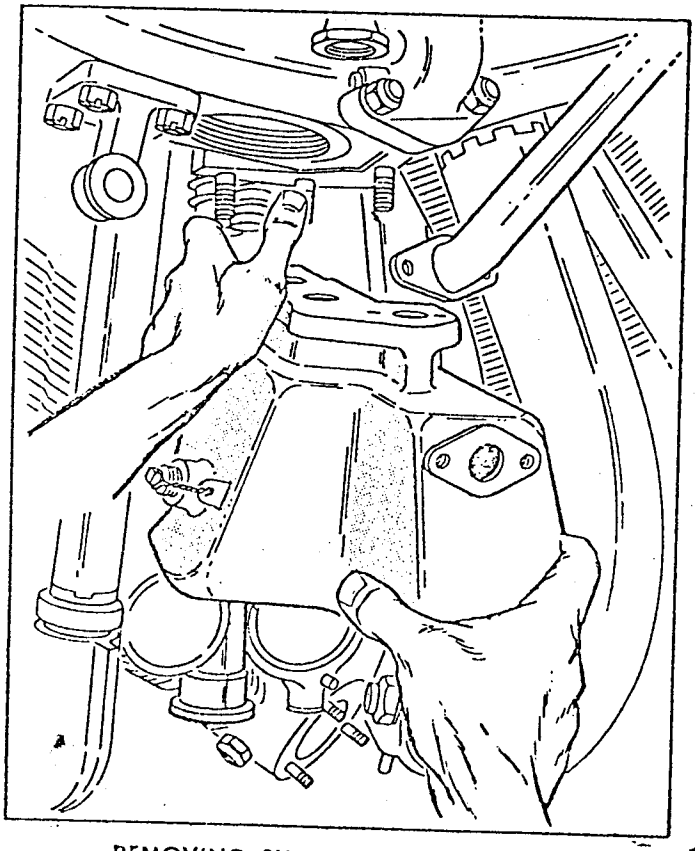

REMOVING SUMP SPRINGS

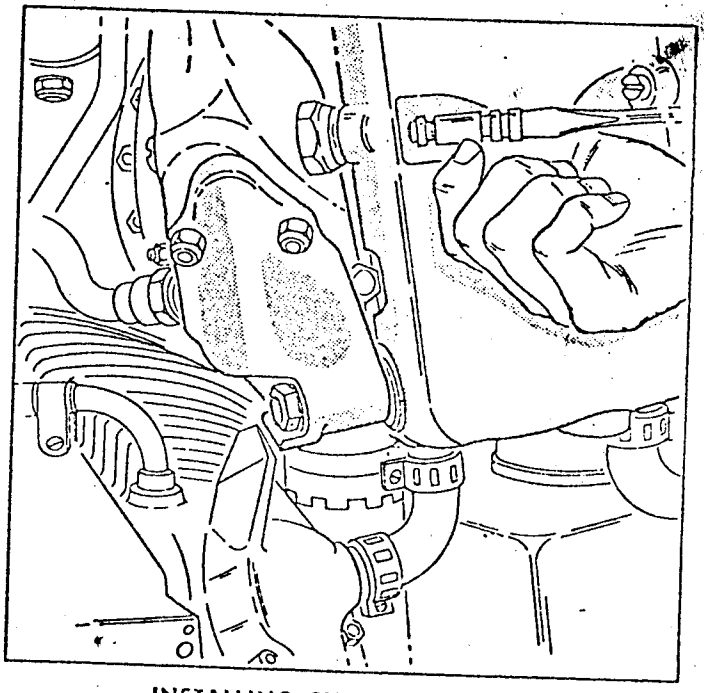

INSTALLING SUMP SCREWS

Figure 4-36. Main Oil Sump—Removal and Installation

33.630

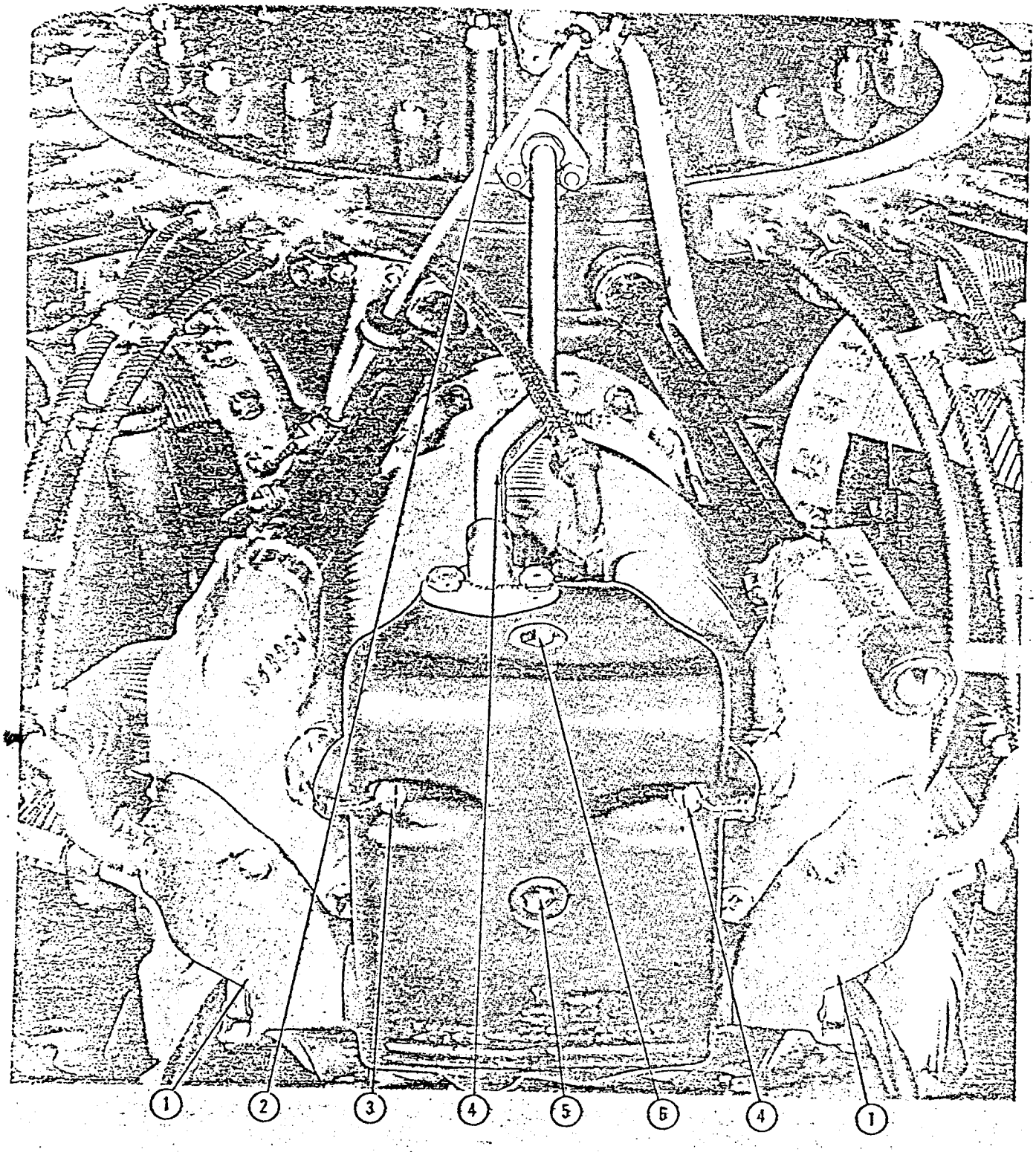

Figure 4-37. Rocker-Box Drain Sump and Front Scavenge Pump

33.631

Key to Figure 4-37

Item	Nomenclature	Item	Nomenclature
1.	Special Rocker-Box Cover Attachment Studs	4.	Scavenge Pipe Sump to Pump
2.	Front Scavenge Pump	5.	Sump Drain Plug
3.	Rocker Arm Shaft Attachment	6.	Sump Drain Plug

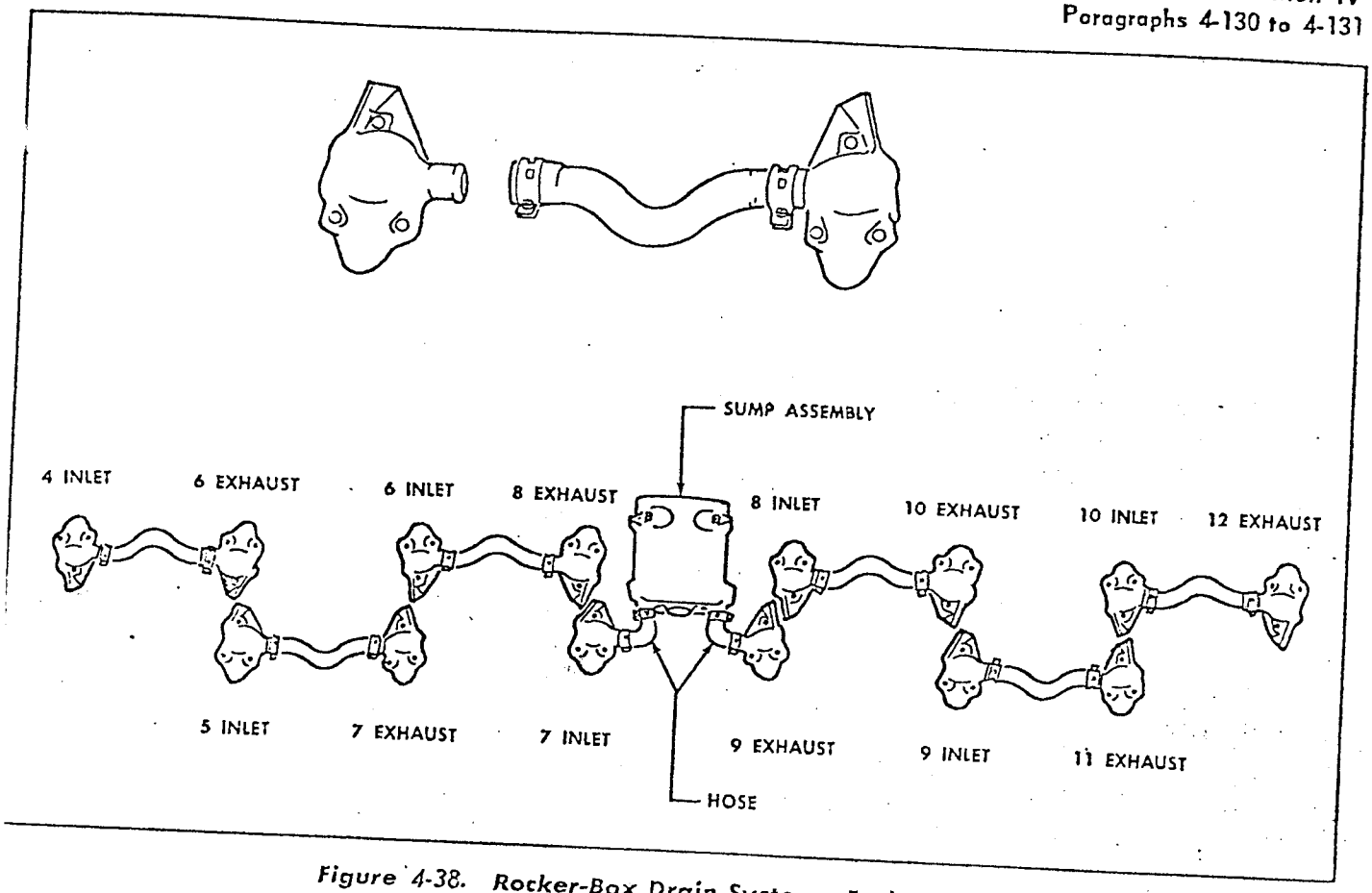

Figure 4-38. Rocker-Box Drain System—Early Engines

33,632

e. Assemble a washer, rubber packing, and washer n sequence order on each sump support screw. Secure he sump to each rocker shaft of cylinder No. 8 with he two sump support screws.

f. Position a new gasket in place on the reduction ear housing, and install the suction and breather pipe ssembly adapter.

g. Place new gaskets in position on the rocker-box ump and on the adapter. Install the suction and reather pipe assembly, fitting the small dowel pin ito position in the sump. Secure the pipe assembly to ie sump with cap screws, and to the reduction gear ousing with washers and nuts on the studs.

h. Install the oil drain plug in the rear of the ocker-box oil sump, placing a gasket between the ug and the sump.

130. OIL TANKS. *(See figures 4-39 and 4-40.)* A)-gallon metal tank is installed in each nacelle im-ediately aft of the firewall. The top is notched to ovide clearance for the landing gear retracting linder, and is 10 percent oversize to allow for oil pansion and foaming. The notch and the baffles stalled within the tank provide a stabilizing effect the oil and prevent sloshing back and forth during ,ht. A temperature accelerating well (hopper) is stalled in each tank, and acts as a means of segregating the foam and air from the oil going to the engine. Return oil from the engine goes into this well to partially isolate it from the rest of the oil supply. The well allows this returned cooled oil to recirculate directly to the engine. A standpipe, located on the outlet fitting to the engine, provides a reserve sump in the tank which reserve oil normally can only be removed by the feathering pump. Filling and measuring facilities are provided at the top of the tank, and provisions for an oil-immersion heater are installed. These provisions also include electrical wiring in the airplane and a casting in the bottom of the tank into which the heater is inserted. On late C-47B and C-117 airplanes, a flexible-type oil-immersion heater is inserted through the filler well. On some of these airplanes, a wooden adapter ring for holding the flexible heater in the filler well is stowed inside the filler door, although on the early C-47B airplanes the wooden adapter ring is replaced by a metal adapter ring. These flexible units are stowed inside the nearest hoist fitting access door.

4-131. REMOVAL OF OIL TANK.

a. Drain the oil tank.

b. Remove the metal ring from the synthetic rubber overflow drain tube end of the outside of the nacelle.

c. Cap the ends of all exposed pipes.

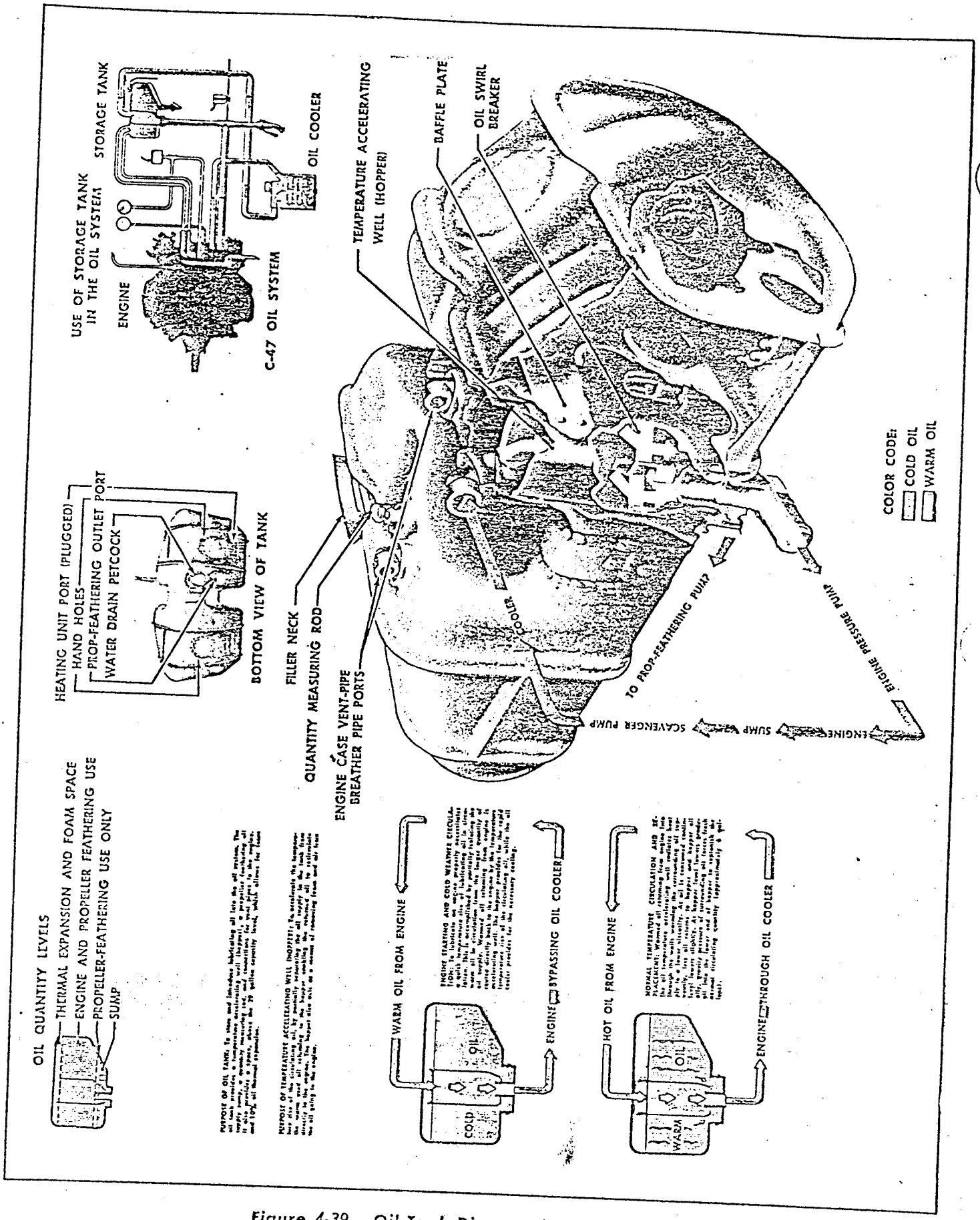

Figure 4-39. Oil Tank Diagram (C-47 Airplanes)

33,641

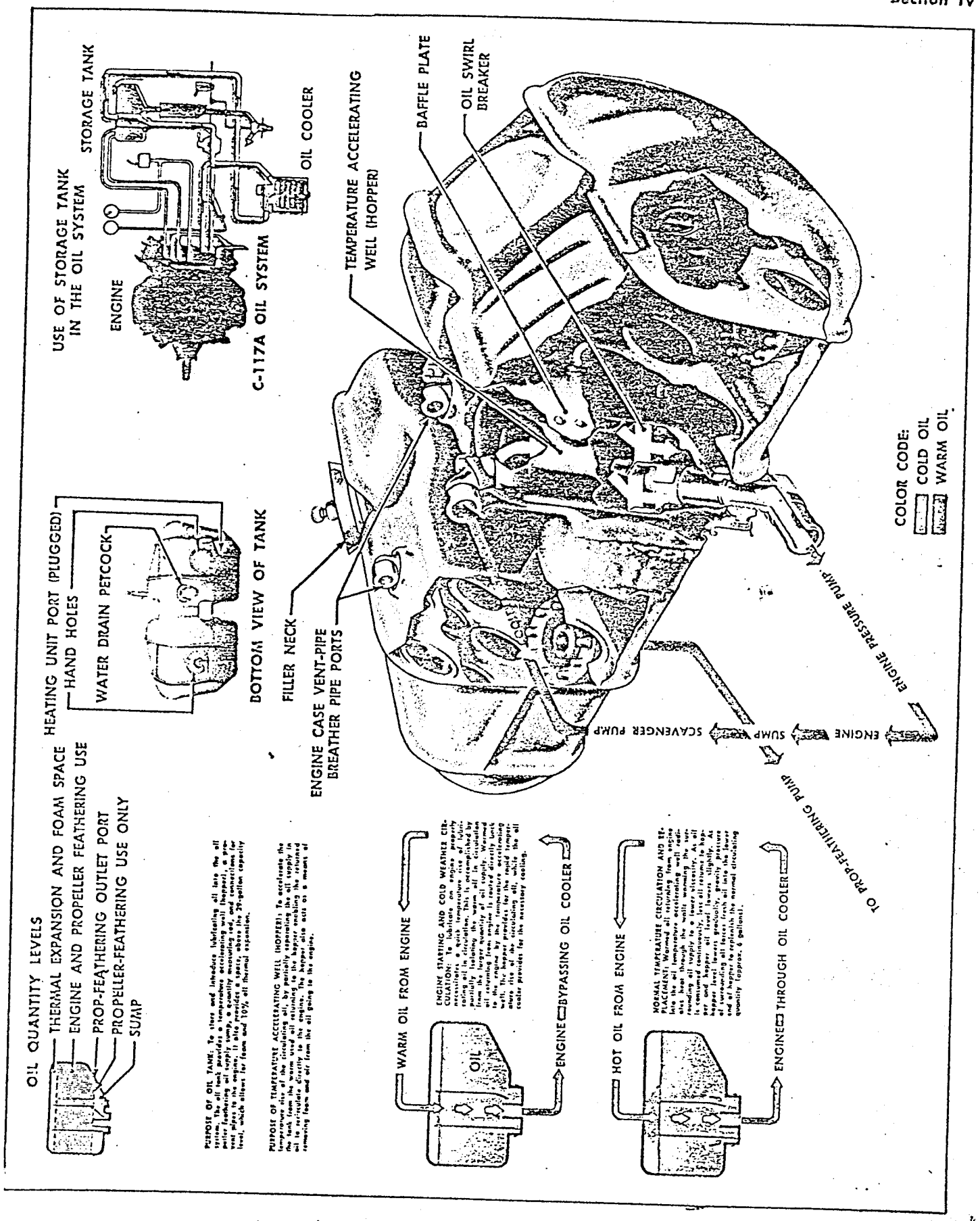

Figure 4-40. Oil Tank Diagram (C-117 Airplanes)

33.642

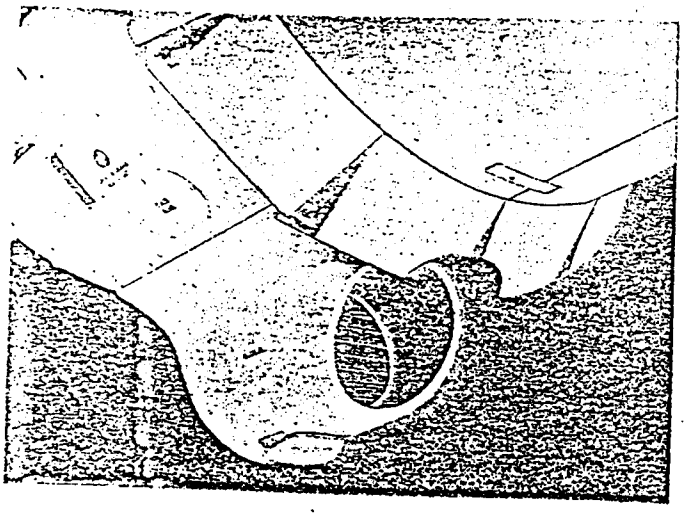

Figure 4-41. Oil Cooler Installed 33,643

d. Remove the bonding strips, and the tank cross braces above the landing gear retracting strut.

e. Cut the lockwire and unscrew the turnbuckles, releasing the tank retaining straps.

f. Lower the tank down and out.

4-132. INSTALLATION OF OIL TANK.

a. Position the tank.

b. Insert the tank cross braces above the landing gear retracting strut.

c. Fasten the tank retaining straps by tightening the turnbuckles with a tank strap puller. Safety the turnbuckles with lockwire.

d. Attach the bonding strips, and connect all piping.

e. Replace the metal ring on the rubber overflow drain tube, and on the outside of the nacelle.

f. Fill the oil tank.

4-133. OIL COOLER ASSEMBLY. *(See figures 4-41 through 4-46.)* The oil cooler assembly consisting of an oil cooler, a pressure valve, and a temperature regulating valve is mounted on the front of the nacelle, below and forward of the firewall. An airscoop channels air through the cooler section of the assembly, and also serves as a cowling for the button of the engine accessory section. Three types of oil coolers are used on C-47 airplanes. Only type No. 3, containing a Type D-8 surge valve, is installed on C-117 airplanes.

a. Type No. 1 consists of an assembly of an oil cooler, and a pressure relief valve. Oil flows directly from the engine to the aft fitting of the cooler unit and normally passes through the cooler core. A relief valve allows the oil to bypass the core into the jacket around the core, thus preventing damage due to high pressure caused by congealed oil. The valve closes and normal flow resumes when the oil in the core is adequately warmed to flow at a pressure setting of the relief valve.

b. Type No. 2 is the same as Type No. 1, with the exception that the oil from the engine first passes through a surge valve mounted at the lower left of the firewall before passing to the cooler. This surge valve bypasses the cooler and routes the high-pressure oil of cold starting directly to the oil tank.

c. Type No. 3, which is also installed in C-117 airplanes, uses a D-8 surge valve which combines the surge and bypass features within a unit mounted on the top of the cooler. The inlet section of the D-8 surge valve contains a pressure-activated dual valve which shuts off the cooler and opens a port to the return-to-tank flow under surge conditions. Reduction of the surge pressure closes the valve, and the oil is admitted to both the jacket and the core of the cooler, permitting oil to flow around the cooler jacket because of lower resistance. The outlet of the jacket is through a thermostatically controlled valve which expands and closes when the oil temperature reaches 76° to 80°C and forces the oil to pass through the cooler core.

4-134. OIL COOLER. The oil cooler is an airstream radiator which removes the heat from the oil returning to the oil tank from the engine. The cooler is composed of a shell, an outer warming jacket (muff), a sectional core separated by baffles, and a mounting flange for the controlling valves. The core presents the appearance of a honeycomb due to the hexagonal ends of the heat transfer tubes, and is sealed with solder to provide a leakproof container with a large contact area. The oil passing through the cooler transfers the engine heat to the cooler core, which in turn transfers the heat to the air on the other side of the core. A series of baffles divides the core into compartments with openings at alternate ends and prevents channeling with inadequate heat transfer. The baffles also provide additional resistance to the thermal stresses and hydraulic pressures, and force the oil to flow the length of the tubes in each compartment before entering the next compartment and to the outlet of the cooler. A free-flow internal warming feature in some cooler speeds the warmup of oil thickened in the cooler during cold weather, and allows low-pressure flow paths to be set up in the oil.

4-135. CONTROL VALVES. High pressures of the oil system can cause considerable damage or collapse to the thin construction of the oil cooler cores. To prevent high-pressure oil from entering the core, pressure relief

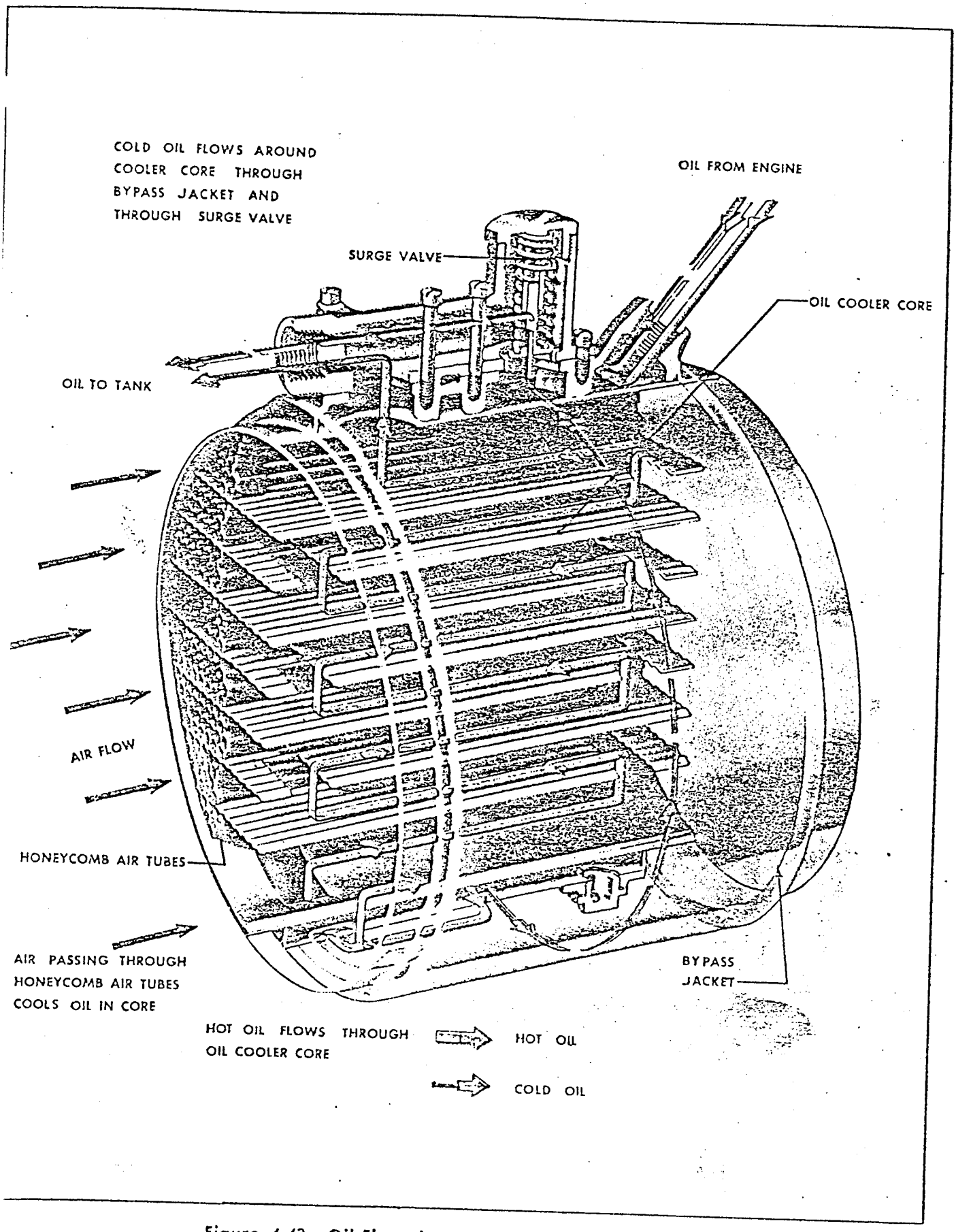

Figure 4-42. Oil Flow through Cooler (C-47 Airplanes)

33.644

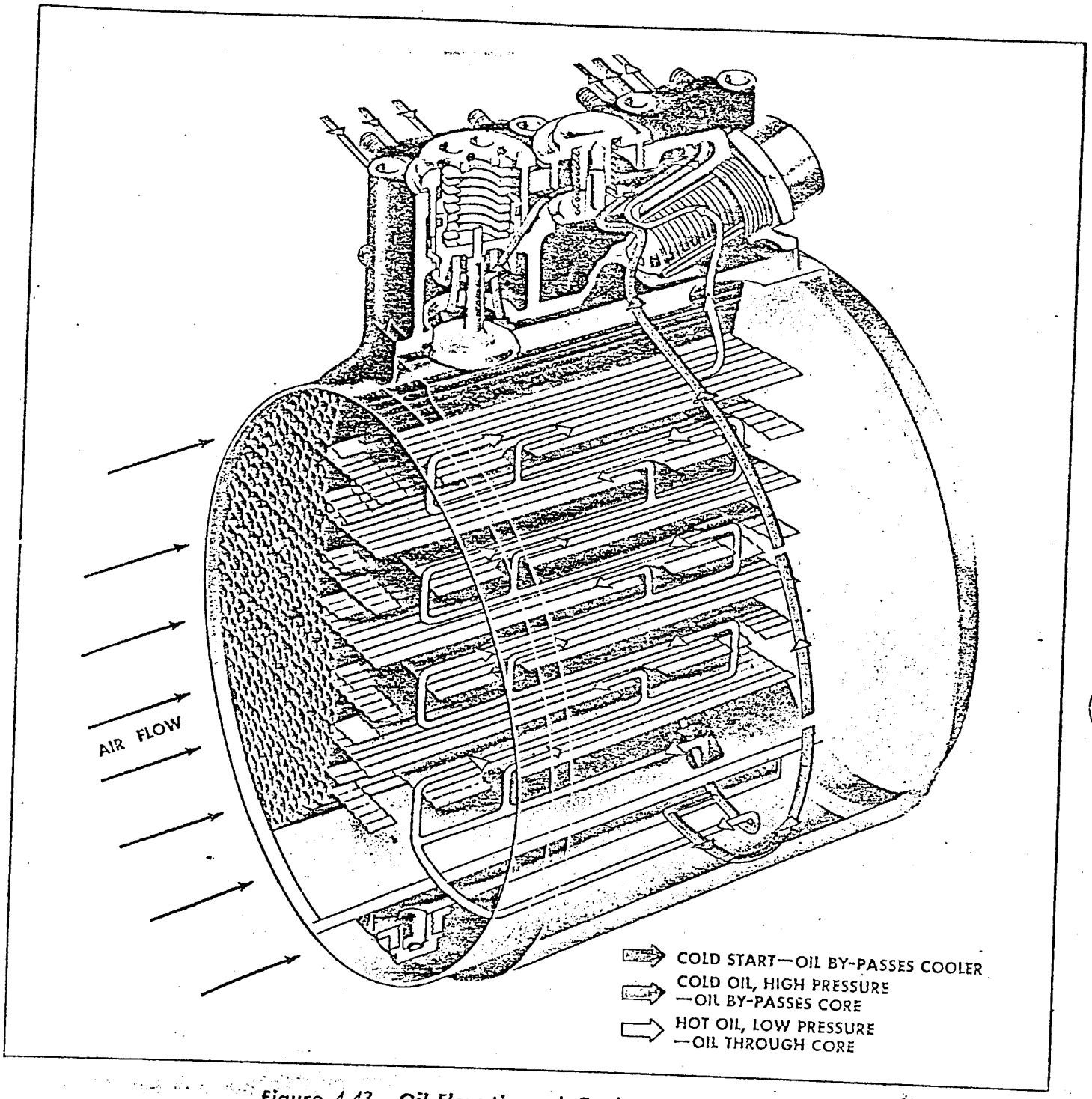

Figure 4-43. Oil Flow through Cooler (C-117 Airplanes)

33,645

valves or surge valves are installed to bypass the core either directing the oil through the jacket or bypassing the cooler completely.

4-136. PRESSURE RELIEF VALVE. The pressure relief valve is installed in all coolers which are not equipped with a thermostatic relief valve. The valve opens and permits the oil to pass through the outer jacket of the cooler to the tank whenever the resistance of the cooler core exceeds 32 psi.

4-137. SURGE PROTECTION VALVE. The surge protection valve is installed on some C-47B and C-117 airplanes to provide additional protection for the oil cooler against high pressure. Any pressure surges that occur and exceed the capacity of the relief valve are relieved through this unit. The dual action of this valve shuts off the port to the cooler simultaneously with the opening of the bypass port. At 55 psi, the bypass port starts to open, and at 70 and 100 psi, the tank port is wide open and the cooler port is completely closed. Some C-47 airplanes incorporate this valve as a separate

unit mounted on the firewall, while in other systems it is an integral part of the oil-temperature regulator.

4-138. THERMOSTATIC VALVE. A temperature actuated valve is incorporated in the D-8 surge valve temperature regulator. At oil temperatures below 68°C, the cooler warming jacket port is open, allowing the oil to bypass the cooler cores. When the temperature rises from 76° to 80°C, the thermostatic bellows expand and close the jacket outlet port causing the oil to flow through the cooler core. Pressure can override the force of these bellows and open the muff port, if for any reason flow through the cores is restricted.

4-139. CHECK VALVE. A check valve is installed in the D-8 surge valve to prevent surge pressures from backing up into either the cooler core or the jacket. The check valve is installed only when airplanes are equipped with the thermostatic valve.

4-140. REMOVAL OF OIL COOLER.

a. Remove the combination airscoop and fairing by loosening the fasteners.

b. Drain the oil cooler through the drain cock or plug, located at the bottom of the unit.

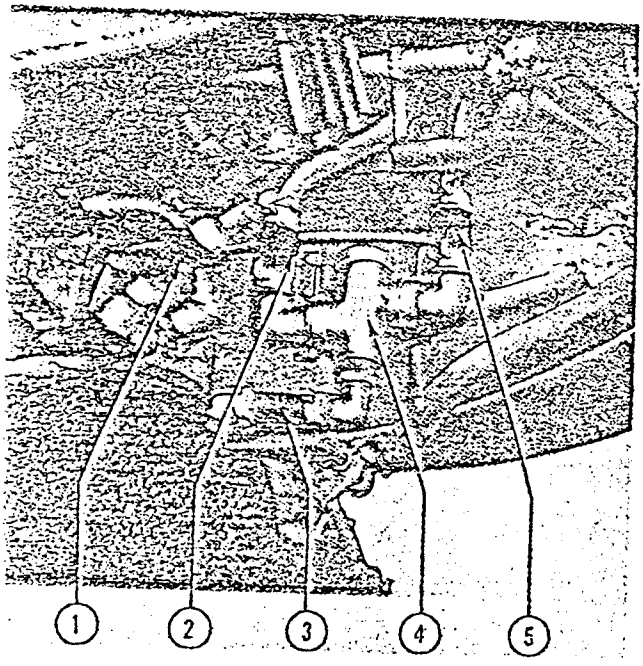

33.647

Figure 4-44. Surge Valve Installed on Firewall

Key to Figure 4-44.	
Item	*Nomenclature*
1.	Oil Pipe — Cooler to Tank
2.	Propeller Governor to Surge Valve
3.	Surge Valve to Oil Cooler
4.	Surge Valve
5.	Surge Valve to Tank

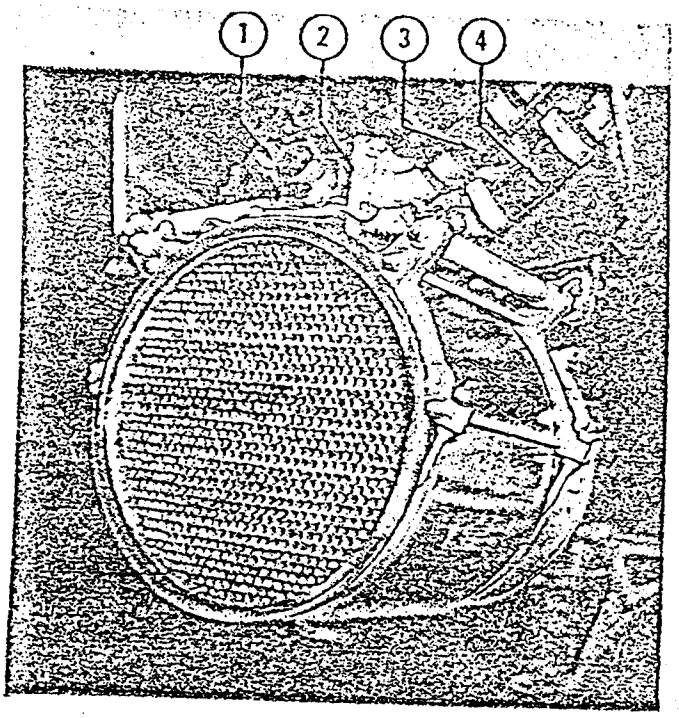

33.646

Figure 4-45. Oil Temperature Regulator with Type D-8 Surge Valve

Key to Figure 4-45.	
Item	*Nomenclature*
1.	Type D-8 Surge Valve
2.	Bracket (2062673)
3.	Oil Return Pipe — Cooler to Tank
4.	Oil Inlet — Engine to Cooler

c. Disconnect the two pipes from the oil inlet and outlet ports and insert plugs into the open ends.

d. Remove the brackets holding the cooler.

e. Unbolt the supports and the metal straps.

f. Remove the valve assembly from the valve mounting flange.

g. Remove the cooler.

Note

The cooler is constructed as an integral unit and must not be disassembled.

4-141. MAINTENANCE OF OIL COOLER. Replace the oil cooler if the cooler tubes are collapsed or damaged, or if the shell is dented.

a. *Small core leak.* Place a steel washer and a thick synthetic rubber washer on the long bolt.

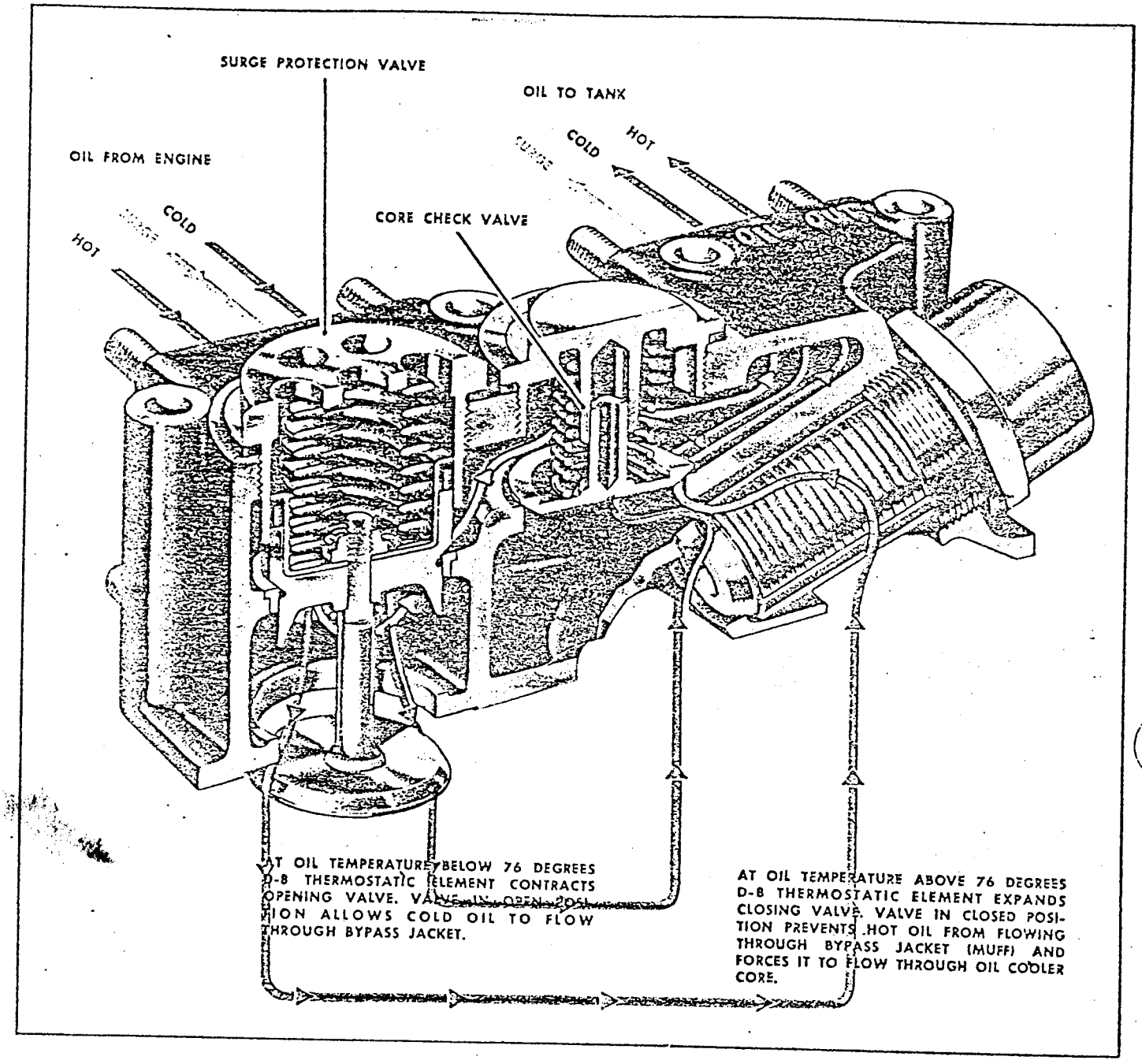

Figure 4-46. Surge Protection Valve—Type D-8 33,648

b. Push the bolt through the leaking tube, and apply the remaining parts in sequence, using a synthetic rubber washer, flat steel washer, lockwasher, and stop nut.

c. Tighten the bolt or nut securely.

d. *Large core leaks.* Prepare two large patches to adequately cover the leaking tubes at both ends of the cooler.

Note

Use rigid metal material for the metal portions of the patch, and thick synthetic rubber for the cooler patch. The dimension of the rubber patch must be identical with the metal patch covering.

e. Drill holes for the bolt through one of the metal patches.

Note

This patch can be used as a template for drilling the remaining patch. Square or rectangular patches must always be drilled near the rounded-off corners. Drill additional holes if necessary.

f. Insert the long bolts through the holes in one of the metal patches and in one of the synthetic rubber patches.

g. Push the bolts through the core tubes so that the leaking area is adequately covered.

h. Slide the synthetic rubber patch and the metal patch onto the bolt ends.

i. Add the lockwashers and the stop nuts; tighten and secure the nuts.

j. *Warming jacket bypass shell leaks.* Prepare a synthetic rubber patch and a metal patch to cover the affected area. Round patches must be used, and both metal and rubber material need not be as rigid as those used in patching the large core leaks.

k. Drill the outer edges of the patch simultaneously to secure alignment of the holes.

l. Bend the metal patch to conform to the contour of the shell and use as a template for punching holes into the jacket.

Note

Do not drill into the shell. Use a short pointed punch to prevent metal chips from entering the cooler as they can hinder the operation of the control valves.

m. Fasten the synthetic rubber and the metal patch to the shell securely with blunt-end sheet metal screws not over 5/16 inch in length.

4-142. CLEANING OF OIL COOLER. Remove and replace the oil cooler if metal particles or sludge have collected, and return it to an overhaul depot.

a. Remove the cooler from the airplane, and detach the valve housing from the valve mounting flange.

b. Fill the regulator with benzol or an authorized cleaner, and rotate the solution to loosen sludge material.

c. Drain the regulator through the drain cock, and again install on the airplane and secure it.

4-143. INSTALLATION OF OIL COOLER.

a. Replace the valve assembly on the valve mounting flange.

b. Bolt and secure the supports and the metal strips.

c. Replace the brackets holding the cooler.

d. Remove the plugs in the open ends of the two pipes from the oil inlet and outlet ports; connect and secure the cooler.

e. Replace the combination airscoop and fairing; tighten and secure the fasteners.

4-144. PIPING AND CONNECTIONS. The aluminum-alloy piping consists of the suction (tank to engine-driven oil pump), propeller feathering, return (engine to tank), and breather and vent pipes.

4-145. REMOVAL OF PIPING AND CONNECTIONS.

a. Drain the system, or affected parts of the system.

b. Remove and disconnect the clamps, hose, and fittings from the pipes that have been removed.

c. Place sealing caps over the ends of all exposed piping.

4-146. MAINTENANCE OF PIPING AND CONNECTIONS.

a. Remove, clean, and check all piping and hose for scratches or damage.

b. Remove minor scratches with a fine grade of emery cloth and oil.

4-147. INSTALLATION OF PIPING AND CONNECTIONS.

a. Remove the sealing caps from all exposed piping.

b. Replace and connect the piping, clamps, hose, and fittings.

c. Check that the oil-inlet thermometer joint connection is secure, and all connections are tight.

d. Allow at least 1 inch of hose to overlap a bead of a pipe to permit sufficient area for the hose clamp. Hose clamps must have take-up allowance.

4-148. OIL DILUTION SOLENOID VALVE. *(See figure 4-47.)* An electrically operated oil dilution solenoid valve is mounted on the firewall and permits fuel to flow into the oil in the propeller feathering pipe and the engine inlet pipe. When a cold start is anticipated, the oil dilution switch energizes the solenoid which lifts the valve and allows fuel to flow into the propeller feathering pipe and the engine inlet pipe. For additional information, see Section VIII.

4-149. OIL PRESSURE INDICATOR. *(See figures 4-48 and 4-49.)* On some C-47 airplanes, a separate oil pressure indicator for each engine is installed on the instrument panel. On late C-47 and C-117 airplanes, a dual oil-pressure indicator is installed on the main instrument panel in the flight compartment. The indicator is connected by oil pipes leading to the oil pressure fitting on the engine.

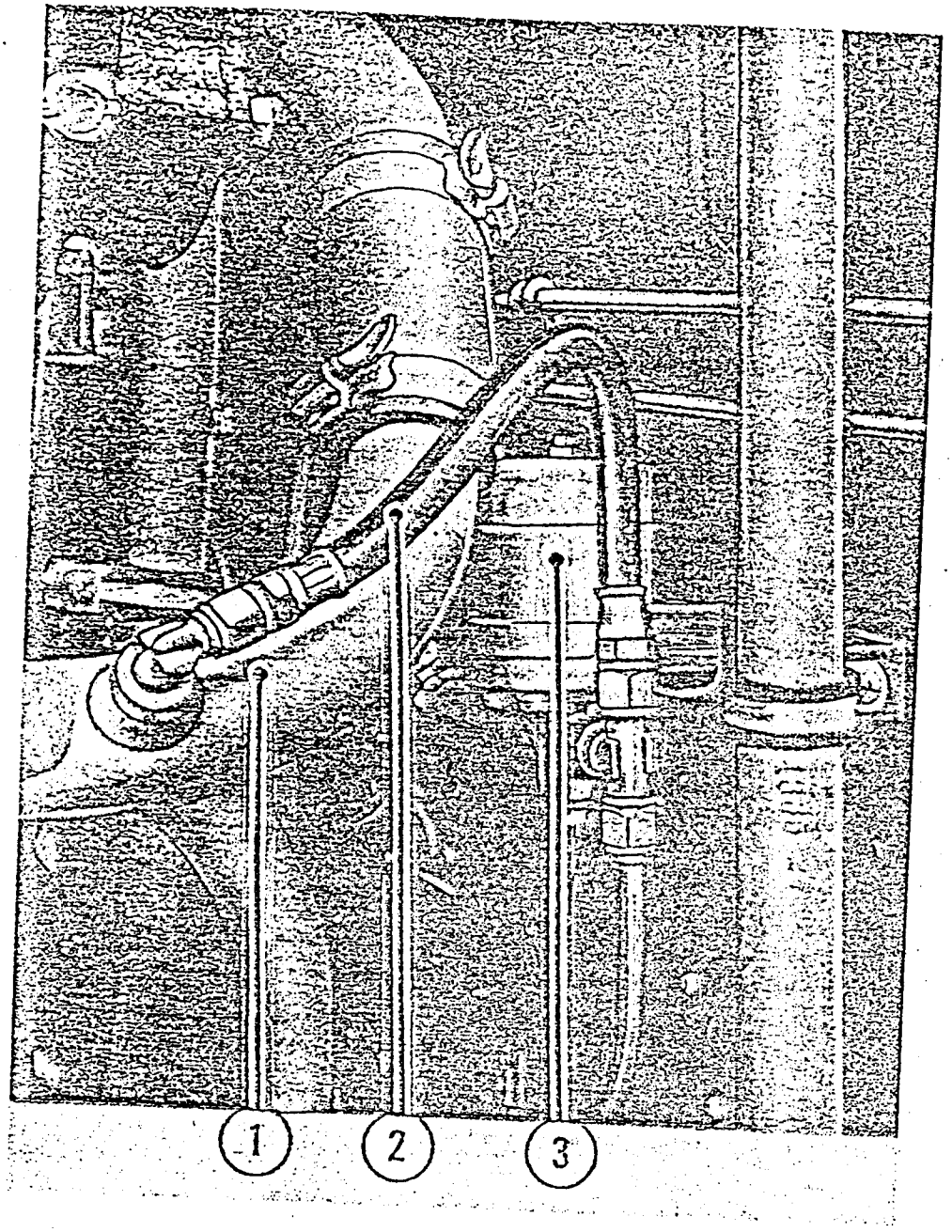

Figure 4-47. Oil Dilution Fuel Pipes

33,649

Key to Figure 4-47

Item	Nomenclature
1.	Oil Supply Pipe
2.	Oil Dilution Fuel Pipe
3.	Oil Dilution Solenoid Valve

4-150. OIL TEMPERATURE INDICATOR. *(See figure 4-49.)* On some C-47 airplanes, the oil temperature indicators consist of two single indicators that are mounted on the instrument panel, although on late C-47 and C-117 airplanes, a dual oil temperature indicator is installed. The temperature bulb is located in the engine oil inlet pipe, right side of the rear engine accessory case, and is wired to the oil temperature indicator. For additional information, see Section VIII.

4-151. OIL EMERGENCY SHUTOFF VALVE (C-117 AIRPLANES). *(See figure 4-29.)* The oil emergency shutoff valve is manually operated and located aft of the firewall. Oil from the tank to the engine section can be closed for emergency conditions by pulling the lever located in the flight compartment.

4-152. FUEL SYSTEM. *(See figure 4-50.)*

4-153. Fuel is supplied from two main tanks and two auxiliary tanks installed in the center wing section. During normal operation, the left tanks supply fuel to the left engine and the right tanks to the right engine. Fuel can be supplied from any tank to either engine by using the fuel selector valve controls located in the flight compartment. The fuel system of the power plant consists of the fuel pump, carburetor, priming solenoid, and piping for fuel, vapor venting, priming, and the pressure gage. For additional information, see Section VI.

4-154. ENGINE-DRIVEN FUEL PUMP. *(See figure 4-51.)* The Type G-9 fuel pump unit is a spline-driven, vane-type, positive-displacement pump installed at the lower left rear of the engine, at the 4-bolt mounting pad below the main oil pump. This type pump is interchangeable with other pumps of this designation, but the position of the relief valve housing must be checked to assure proper bypass and pressure relief direction. The output pressure of the pump is controlled by the pressure relief valve which is adjustable by varying a spring pressure. Air density variations are compensated for at the pump by a syphon which aids the bypass spring force. The vented air syphon provides a constant-pressure differential in the carburetor and the fuel pressure gage, and also serves as an overboard drain in the event of damage or a leaking seal. The pump on either engine is capable of supplying the fuel requirements of both engines at full power.

4-155. REMOVAL OF ENGINE-DRIVEN FUEL PUMP.

a. Disconnect and cap all pipes attached to the pump.

b. Cut the safetywire and remove the four screws in the mounting bracket.

c. Remove the pump by pulling straight back to disengage the gear on the pump drive shaft from the engine drive gear.

d. Cover the opening to prevent foreign matter from entering the engine.

4-156. MAINTENANCE OF ENGINE-DRIVEN FUEL PUMP. Replace any engine-driven fuel pump that does not function properly.

4-157. INSTALLATION OF ENGINE-DRIVEN FUEL PUMP.

a. When installing a new engine-driven pump, remove the cover plate and gasket from the engine fuel pump drive and wipe the pad clean. Remove the shipping plugs from the pump ports and turn the shaft. If the shaft does not turn freely, tap it on a wood block to free the parts.

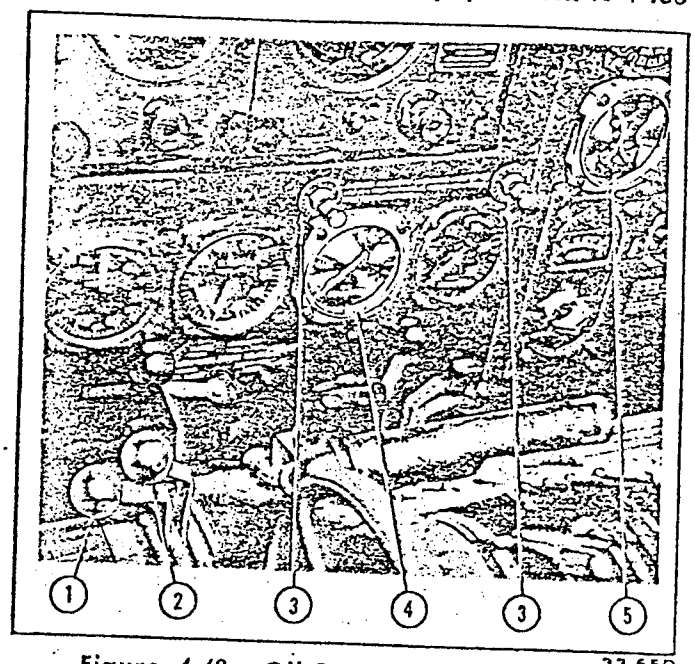

33,650

Figure 4-48. Oil System Control Levers and Instruments

Key to Figure 4-48

Item	*Nomenclature*
1.	Oil Cooler Shutters Control Lever (left engine)
2.	Oil Cooler Shutters Control Lever (right engine)
3.	Oil Gage Service Fitting
4.	Oil Pressure Indicator (dual)
5.	Oil Temperature Indicator (dual)

b. Check the direction of rotation of the drive gear and the position of the relief valve housing before mounting the pump on the engine. Rotate the relief valve housing to insure that the bypass valve is in its correct position. Place the new gasket in position over the mounting studs, mount the pump, and position it for necessary connections. Tighten the mounting nuts evenly and secure. Self-locking nuts may be used in place of castle nuts.

c. Connect the intake, discharge, and drainpipes to the proper pump ports. The discharge port for either direction of rotation is designated by arrows on the nameplate fastened to the end of the pump body. Use a length of flexible tubing near the pump ports to insure against tube fracture which may result from engine vibration.

4-158. CARBURETOR. *(See figures 4-52, 4-97 and 4-98.)* Type PD-12H4 carburetors are installed on the R-1830-92 engines, while the R-1830-90 engines require Type PD-12F5. The R-1830-92 engines have a blower section with an adapter mounting pad which is slanted aft. On the R-1830-90 engines the blower section adapter mounting pad is horizontal. Basically, the pressure-type downdraft carburetors are identical with the five

MAIN INSTRUMENT PANEL, CENTER SECTION

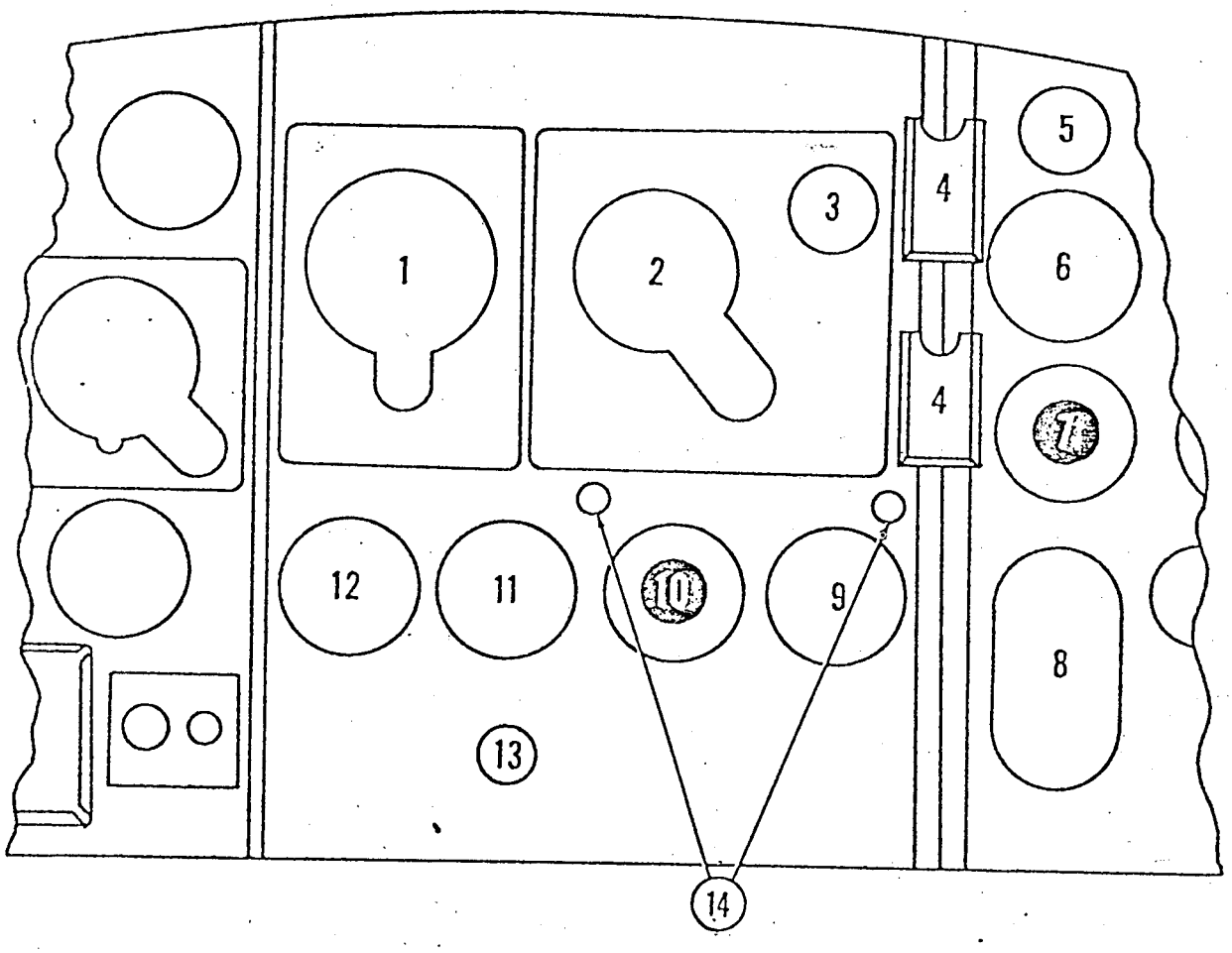

1. Autopilot Directional Indicator and Control Box
2. Autopilot Bank-and-Climb Gyro and Control Box
3. Autopilot Suction Gage
4. Placard
5. Free Air Temperature Indicator
6. Airspeed Indicator, Co-Pilot's
7. Oil Temperature Indicator (Dual)
8. Fuel Quantity Gage
9. Fuel Pressure Indicator (Dual)
10. Oil Pressure Indicator (Dual)
11. Manifold Pressure Gage (Dual)
12. Tachometer (Dual)
13. Manifold Pressure Gage Selector
14. Oil Gage Service Fitting

Figure 4-49. Oil System Instruments

33.651

functional sections, and contain the main throttle body, automatic mixture control, fuel regulator unit, fuel control, and carburetor-to-blower case adapter.

4-159. The throttle body incorporates the throttle valve, which controls the amount of air entering the engine, and the venturis and impact tubes which measure the amount of air entering the engine.

4-160. The automatic mixture control unit, consisting of a sealed metallic bellows and a contoured needle valve, is mounted at the top of the throttle body directly in the airstream entering that unit. The bellows is filled with nitrogen and oil, and expands or contracts with changes in air density, caused by a variation in altitude and temperature. The bellows actuates a valve controlling the flow of air from the impact tubes to the chamber in the fuel passage regulator.

4-161. The fuel pressure regulator unit is divided into a fuel and an air section, and each section is subdivided into two chambers. One air chamber receives air from

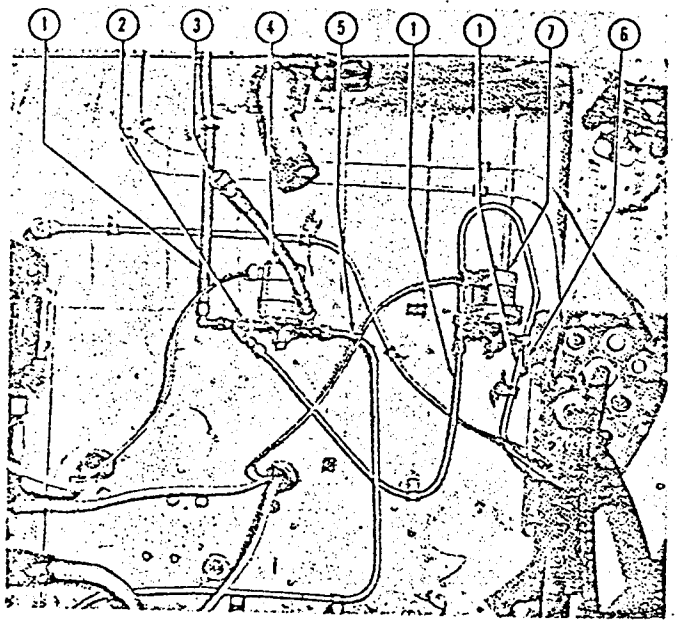

33,087

Figure 4-50. Fuel System Components on Firewall (Some C-47 Airplanes)

Key to Figure 4-50

Item	*Nomenclature*
1.	Fuel Pressure Indicator Line
2.	Restrictor Fitting
3.	Line to Engine Oil System
4.	Oil Dilution Solenoid
5.	Oil Dilution Line to Engine Oil System Wye Drain
6.	Outlet Side of Engine Primer Solenoid
7.	Engine Primer Solenoid

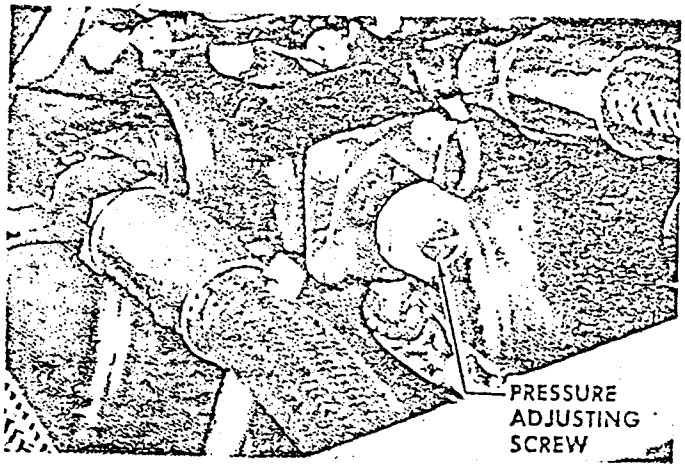

33,612

Figure 4-51. Engine-Driven Fuel Pump

the impact tubes with the adjacent chamber connected to the boost venturis. The force created by the pressure differential across the diaphragm is transmitted to the poppet valve shaft. In the fuel section, one chamber receives metered fuel which also applies a force to the poppet valve shaft and in the same direction as that applied by the air section. The other chamber of the fuel section receives fuel direct from the poppet valve and exerts a counteracting force to close the valve. Separated from the unmetered fuel compartment by the poppet valve is a chamber containing a float-actuated valve and a strainer. The valve serves to prevent vapor from entering the unit, while the strainer prevents solid particles from passing to the control unit.

4-162. The fuel control unit contains fixed metering jets, the idle mixture metering jet, the power enrichment valve, and a 4-position mixture control selector valve. Mixture settings can be selected by a manual control which contains an idle cut-off position to stop all fuel flow to the discharge nozzle. Idling mixture is controlled by an adjustment of the linkage between two parts of the control unit.

4-163. The adapter unit incorporates the fuel discharge nozzle, the accelerating pump, and the interconnecting pipe from the fuel control unit, and is mounted on the throttle body to adapt the carburetor to the engine.

4-164. REMOVAL OF CARBURETOR.

a. Close the fuel system shutoff valve and drain the fuel from the engine at the strainer drain valve.

b. Release the fasteners and remove the upper section of the accessory cowling on the outboard side.

c. Disconnect the neoprene sleeve which extends from the airscoop adapted to the air duct.

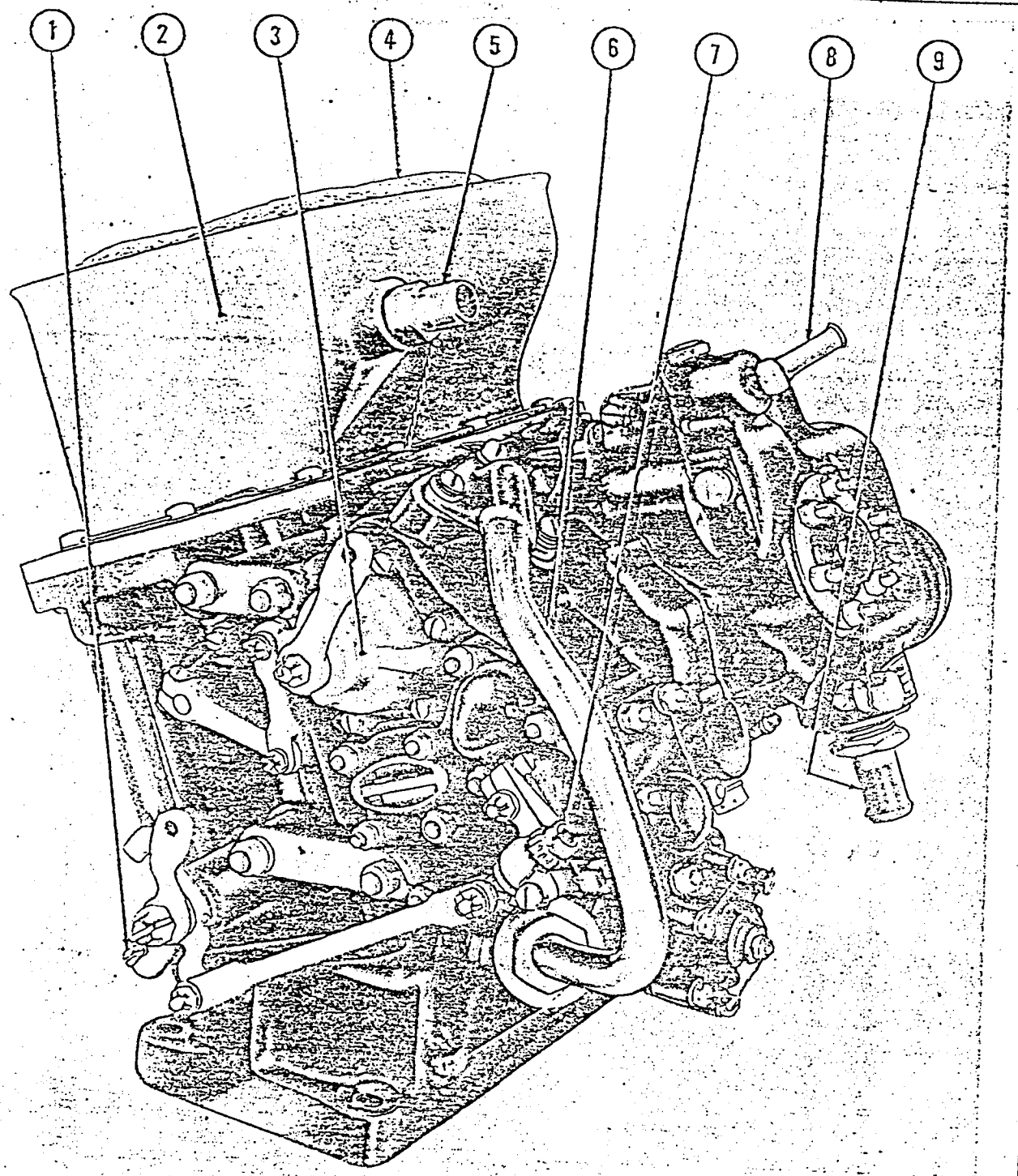

BENDIX-STROMBERG INJECTION CARBURETOR

1. Throttle Stop and Idle Speed Adjustment
2. Airscoop Adapter
3. Manual Mixture Control
4. Airscoop Screen
5. Air Temperature Gage Resistance Bulb
6. Fuel Transfer Pipe
7. Idle Mixture Adjusting Mechanism
8. Carburetor Fuel Inlet Vent Pipe
9. Fuel Inlet Pipe

Figure 4-52. Carburetor and Idle Adjustment Details

33.653

d. Remove the carburetor airscoop.

e. Disconnect the throttle control rod from the throttle lever, and the manual mixture control rod from the manual mixture control lever.

f. Detach the fuel pipe, the fuel pressure gage pipe, and the vapor vent connection return pipe.

g. Disconnect the pipe from the primer distributor, and the primer electrical connection.

h. Remove the carburetor attaching screws and lift off the carburetor and its adapter.

Note

Close the opening in the intermediate rear case with a suitable cover so that no foreign matter enters the engine.

4-165. INSTALLATION OF CARBURETOR.

Note

Prior to initial operation, all carburetors must be soaked (refer to paragraph 4-166.)

Improper installation of the carburetor can cause serious malfunction, and even rejection of the carburetor. Air leaks, damaged gaskets, cracked throttle bodies, misalignment, and binding can be caused by overtorquing or undertorquing the carburetor attach bolts. If the following precautions are observed when installing the carburetor, satisfactory operation will be obtained.

a. When installing the carburetor, wire the throttle valve closed to prevent entry of foreign objects, bolts, lockwire, etc, into the engine.

b. Check the carburetor mounting surfaces on the engine and the throttle body for nicks, burrs, warpage, and portions of oil gasket.

c. When the engine has been in operation and the case or carburetor becomes warped it is permissible to install a gasket between the accessory case and carburetor.

TABLE 4-3
TORQUE LIMITS - BENDIX STROMBERG CARBURETORS

Description	*Size*	*Torque (Inch-Pounds)*
ELASTIC STOP NUTS. When used to clamp rubber diaphragms or gaskets between metal surfaces, again torque after 20 minutes (minimum) to value indicated by percent.	No. 8-32	15 to 20
	No. 10-32	30 to 40
	¼-28	70 to 80 (60%)
	5/16-24	100 to 125 (90%)
SCREWS. When used to clamp rubber diaphragms between metal surfaces, again torque after 10 minutes to original value.	No. 8-32	20 to 25
	No. 10-24	20 to 30
	¼-20	25 to 35
TAPER SEAT PLUGS. Assemble snug against seat, tap with rawhide mallet, then set to specified torque value.	No. 8-32	20 to 25
	No. 10-32	25 to 35
	¼-28	30 to 40
	5/16-24	35 to 45
	3/8-24	50 to 60
	7/16-20	65 to 75
	½-20	70 to 80
PIPE PLUGS.	⅛ inch	45 to 65
	¼ inch	70 to 110
	3/8 inch	95 to 135
STUDS. If standard size is removed, it is permissible to replace with first oversize if necessary to obtain required torque.		*Minimum*
	10-24 (10-32)*	20
	¼-20 (¼-28)*	40
	5/16-18 (5/16-24)*	60
	3/8-16 (3/8-24)*	70
STEP STUDS.		*Minimum*
	¼-20 (10-32)*	20
	5/16-18 (¼-28)*	40
	3/8-16 (5/16-24)*	60
	7/16-14 (3/8-24)*	70

*Denotes nut-end size of studs.

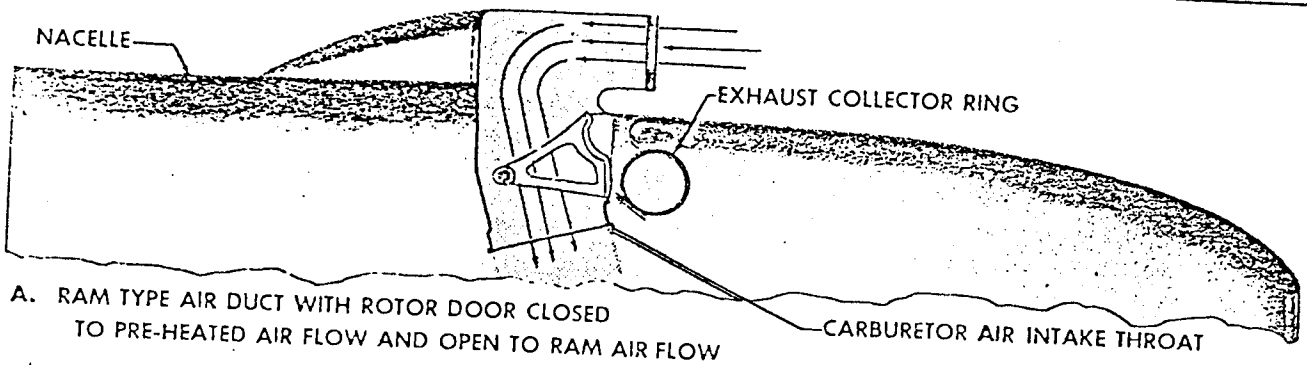

A. RAM TYPE AIR DUCT WITH ROTOR DOOR CLOSED TO PRE-HEATED AIR FLOW AND OPEN TO RAM AIR FLOW

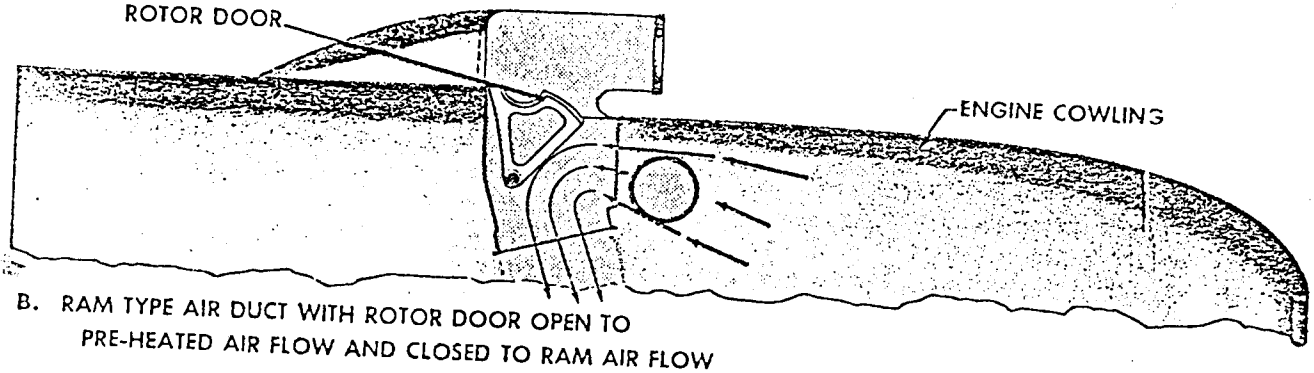

B. RAM TYPE AIR DUCT WITH ROTOR DOOR OPEN TO PRE-HEATED AIR FLOW AND CLOSED TO RAM AIR FLOW

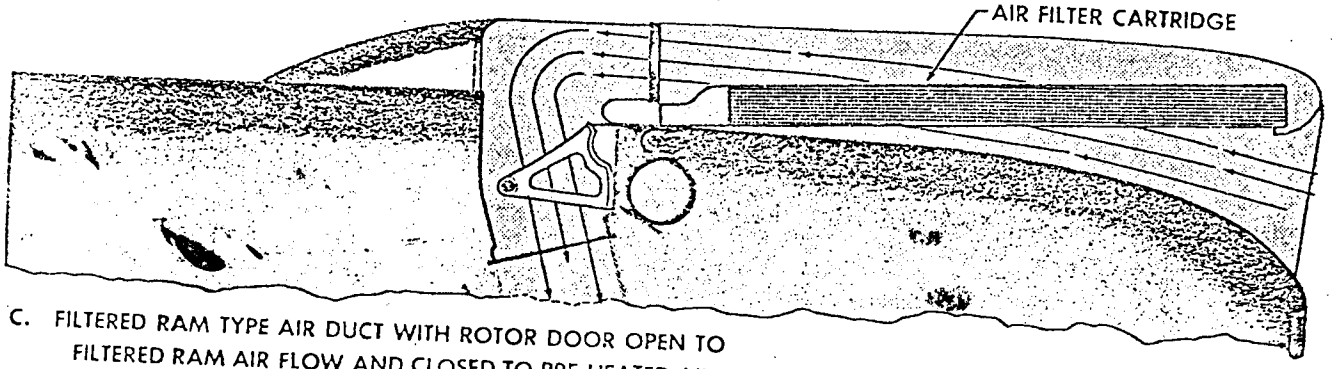

C. FILTERED RAM TYPE AIR DUCT WITH ROTOR DOOR OPEN TO FILTERED RAM AIR FLOW AND CLOSED TO PRE-HEATED AIR FLOW

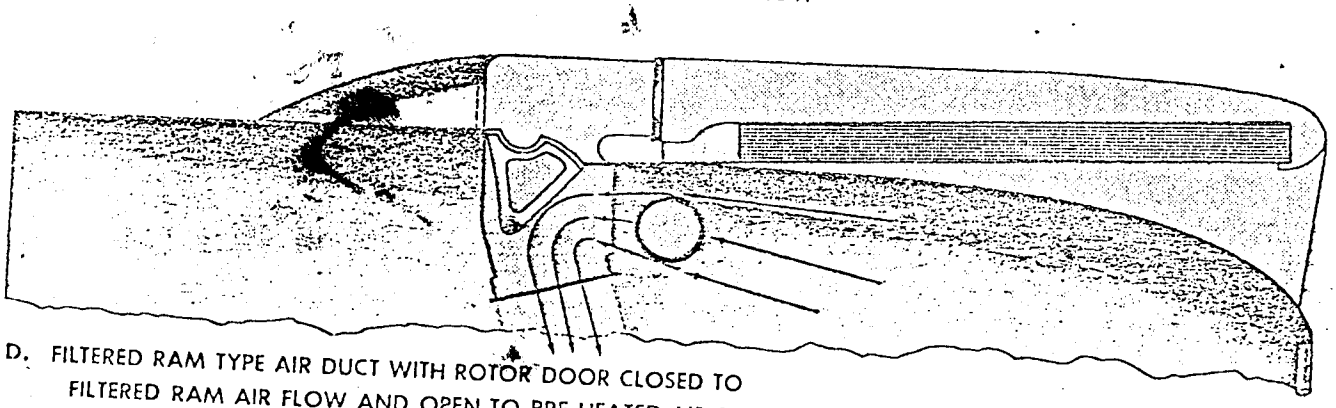

D. FILTERED RAM TYPE AIR DUCT WITH ROTOR DOOR CLOSED TO FILTERED RAM AIR FLOW AND OPEN TO PRE-HEATED AIR FLOW

COLOR CODE:

RAM AIR

HOT AIR

Figure 4-53. Principle of the Ram and Ram Filter Air Induction Systems (C-47 Airplanes)

33.427

Note

On R1830-90D engines, an F11N 0235-2810-118-1704 gasket may be used. For R1830-92 engines, make a gasket from F11N 5330-527-5898 (1/32-inch thick) material. Make certain that all passages through the gasket are free of restrictions.

d. Position the carburetor on the engine and install washers and attach bolts. Tighten the attach bolts until a slight drag is felt.

e. Stagger-torque the attach bolts, starting in the center and tightening outward. Torque all carburetor attach bolts from 200 to 225 inch-pounds.

f. Lockwire all carburetor attach bolts.

g. Make necessary hookups to complete installation.

4-166. CARBURETOR FLUSHING AND SOAKING. Prior to installation, flush the carburetor to remove preservative oil, and soak to restore the correct flexibility to the diaphragms. If the carburetor is not flushed to remove the preservative oil, the oil may enter the engine and cause a partial or complete liquid lock. If the carburetor is not soaked, the diaphragms will not function properly and the carburetor adjustments will not remain constant.

Note

When flushing and soaking a carburetor, the following procedures shall be used.

a. Install the carburetor as described in paragraph 4-165.

b. Remove the 1/8-inch pipe plug from the fill valve cover plug and connect a flexible hose long enough to clear the engine.

c. Place the manual mixture control in the IDLE CUT-OFF position and turn the boost pump to the ON position.

Note

When flushing a carburetor that is installed on the engine, with all lines connected, there is a possibility of oil and fuel entering the lower cylinders and causing a liquid lock.

CAUTION

Under no condition should a carburetor be completely submerged in fuel.

d. Allow fuel to flow through the carburetor and out of the hose into a container until the fuel flowing out of the hose becomes clear.

e. Move the manual mixture control out of the IDLE CUT-OFF position for a period of 2 to 5 seconds.

f. Move the manual mixture control to the IDLE CUT-OFF position.

g. Close the emergency shutoff valve.

h. Turn the boost pump OFF.

i. Allow the fuel to remain in the carburetor for a minimum of 2 hours prior to any engine operation.

4-167. TORQUE LIMITS. For torque limits of the Bendix Stromberg carburetors, refer to table 4-3.

4-168. CARBURETOR AIR INDUCTION SYSTEMS.

4-169. GENERAL DESCRIPTION. *(See figures 4-53 through 4-56.)* The three basic types of carburetor air induction systems are the ram, the ram filter and the ram-nonram filter systems. The ram-type system is installed on C-47 and C-47A airplanes, and contains an airscoop duct, located on the top forward edge of the engine accessory cowling, which routes outside air directly to the carburetor. The ram filter-type system is installed on C-47 and on some C-47A airplanes, and consists of the same type of airscoop duct assembly with a detachable filter duct unit. This filter duct unit is connected to the leading edge of the antidrag ring to direct filtered ram air to the carburetor. The ram-nonram-filter type system is of three specific designs. One design contains hydraulically operated doors and is installed on some late C-47A airplanes. Another design contains electrically operated doors and is installed on many early C-47B airplanes. The third design contains manually operated doors and is installed on late C-47B and C-117 airplanes.

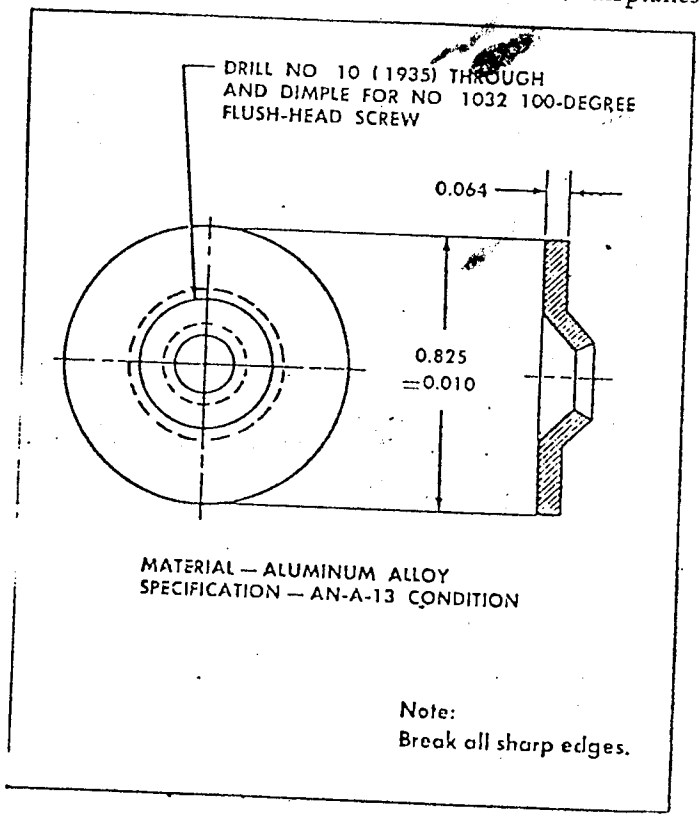

40.210

Figure 4-54. Cowling Plug — Air Filter Duct

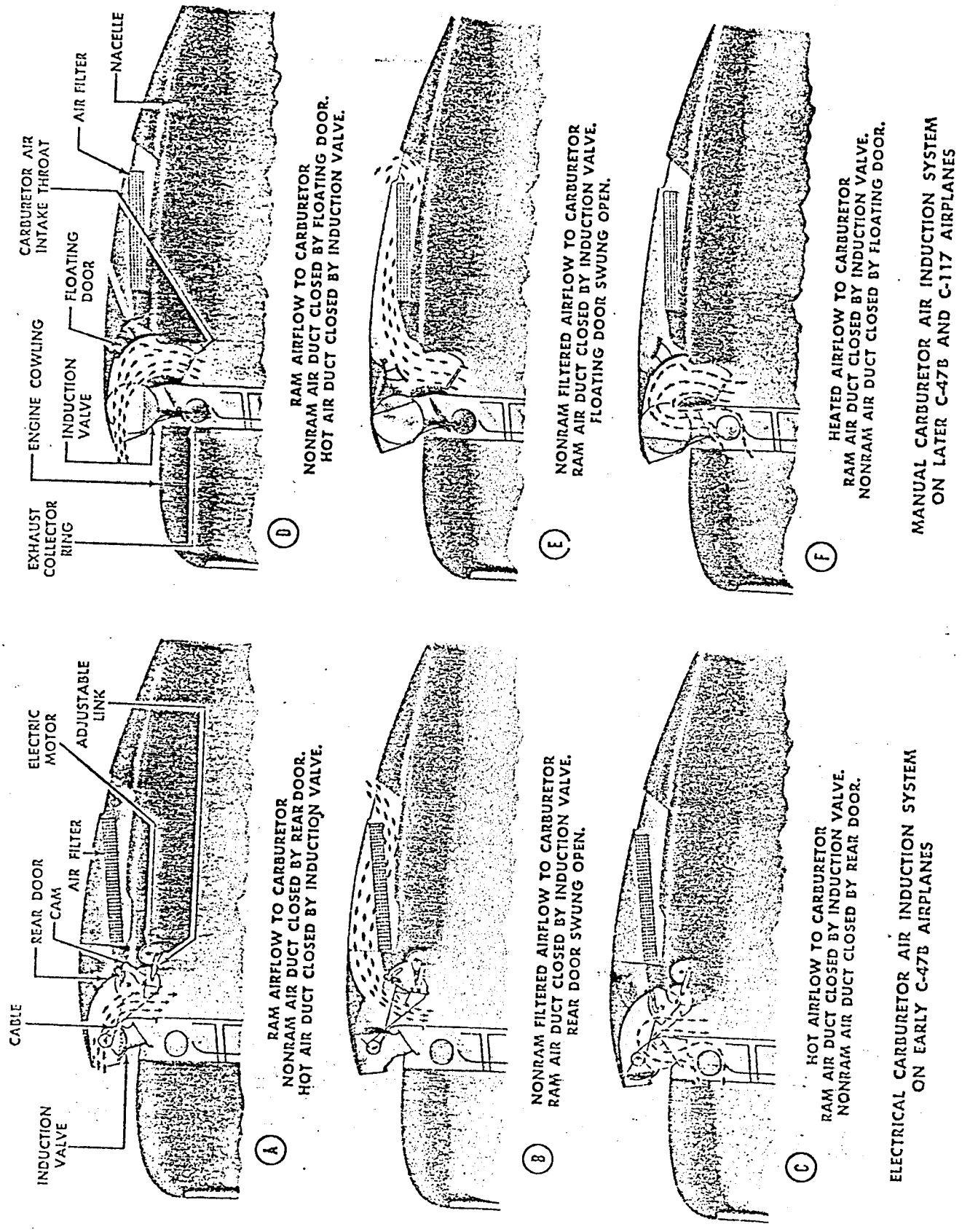

Figure 4-55. Principle of Electrically and Manually Operated Ram-Nonram Air Induction Systems (C-47B and C-117 Airplanes)

33,428

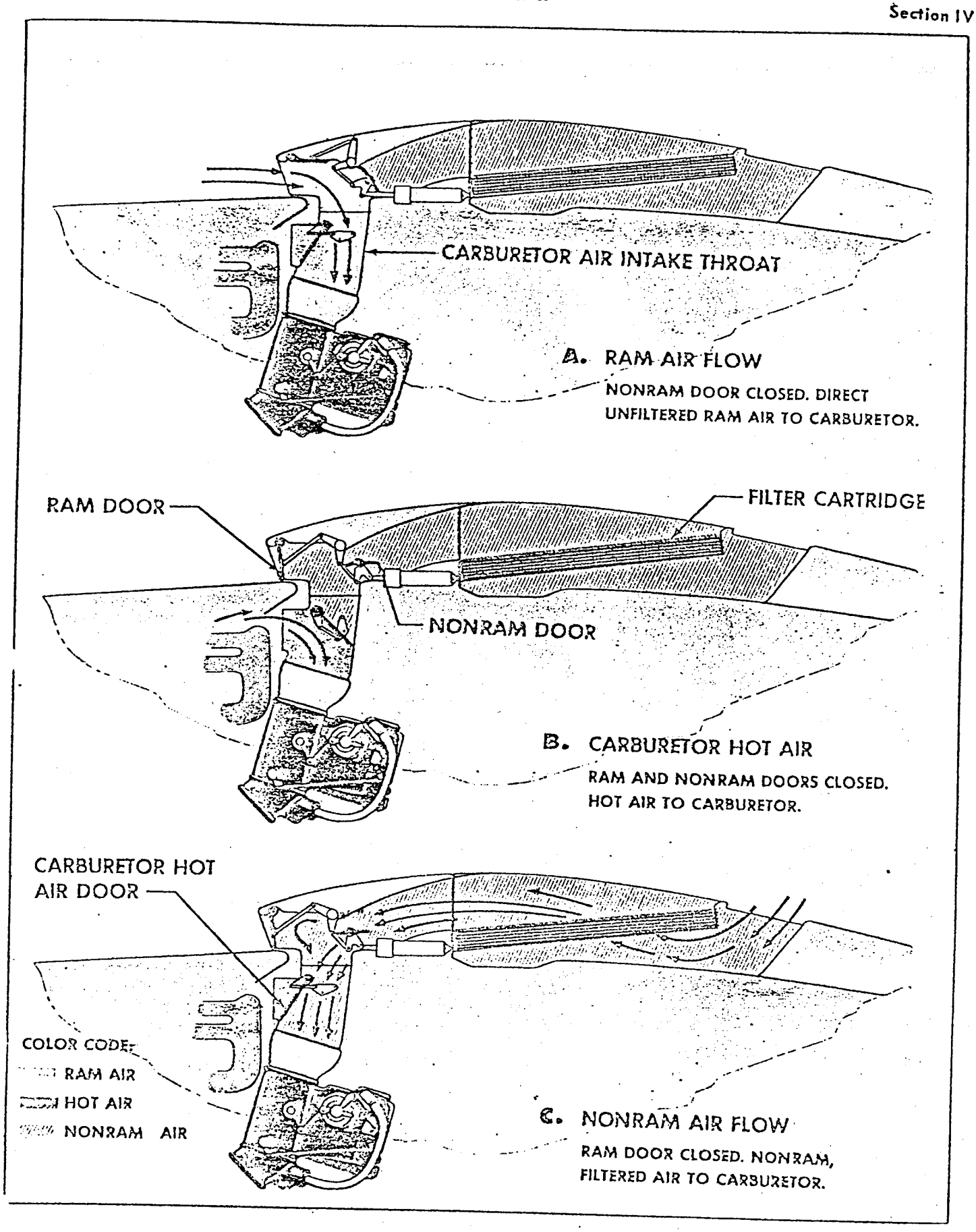

Figure 4-56. Principle of Hydraulically Operated Ram-Nonram Air Induction System (C-47 Airplanes)

33,429

The fairings on these airplanes extend from the leading edge of the engine accessory cowling to the halfway point of the nacelle plating. Ram air is directed through the forward section opening of the fairing, and filtered nonram air is introduced through the opening near the top aft end of the fairing.

4-170. REMOVAL AND INSTALLATION OF COMPONENTS OF CARBURETOR AIR INDUCTION SYSTEMS. Removal and installation of the components of the carburetor air induction systems are accomplished as outlined in the following paragraphs. Testing, disassembly, assembly, maintenance, and adjustment procedures are outlined where applicable.

4-171. RAM-TYPE SYSTEM. *(See figure 4-53.)* The direct ram duct is riveted to the accessory cowling and incorporates a door, located in the air-intake chamber directly above the carburetor, to provide hot air from around the exhaust collector ring to be routed into the carburetor. The carburetor hot air control levers for the door are located on the pilot's control pedestal. When the hot air door is opened, the ram air entrance is closed, causing the ram air to bypass through the opening in the side of the airscoop assembly.

4-172. RAM FILTERED-TYPE SYSTEM. *(See figure 4-57.)* The ram filter-type system is a direct-ram type with a fairing added to house a filter. The long airscoop extends forward to the leading edge of the antidrag ring and contains an air filter installed in the forward end of the duct chamber. The filter assembly is removable and attaches to the antidrag ring with lock fasteners. The carburetor hot air control operation is the same as described in paragraph 4-171 for the ram-type system.

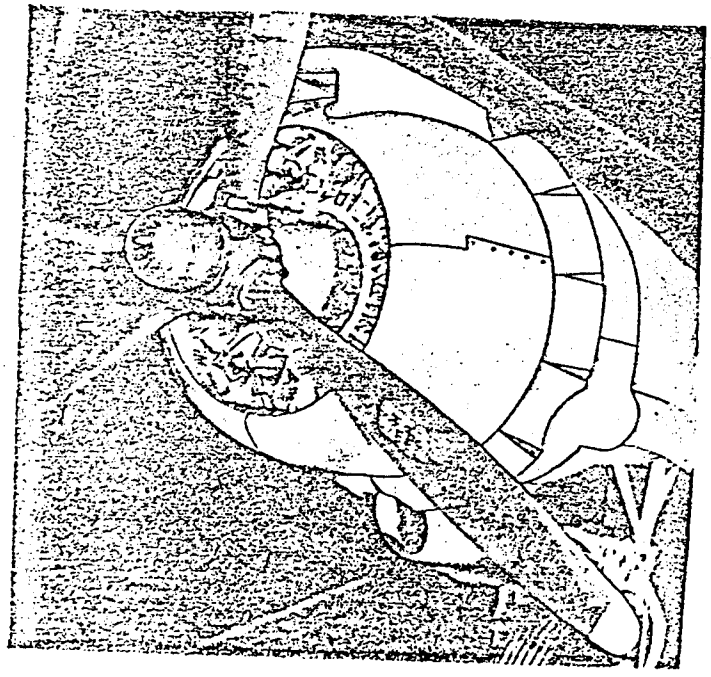

33,430

Figure 4-57 Ram Filter-Type Airscoop (C-47 Airplanes)

4-173. REMOVAL OF RAM FILTER-TYPE AIR FILTER ASSEMBLY.

a. Release the fasteners on both sides of the duct forward section.

b. Remove the duct forward section from the antidrag ring unit.

c. Remove the air filter.

d. When the ram air filter is not to be reinstalled, manufacture plugs as shown in figure 4-54. Install plugs in air lock fittings, using AN 507-1032 screws, AN 960 washers and AN 365 nuts.

4-174. INSTALLATION OF RAM FILTER-TYPE AIR FILTER ASSEMBLY.

Note

The air filter must be installed with the fine screen side up.

a. Install and secure the air filter in the duct forward section.

b. Install the duct forward section on the antidrag ring unit.

c. Lock the fasteners on both sides of the duct forward section.

4-175. RAM-NONRAM TYPE (HYDRAULIC) SYSTEM. *(See figures 4-56 and 4-58.)* The ram-nonram (hydraulic) airscoop extends from the leading edge of the accessory cowling to the halfway point of the nacelle plating. The duct opening at the aft end, with the air filter, provides the nonram air. The forward opening provides direct ram air through the carburetor airscoop and is controlled by both ram and aft butterfly doors located at the end of the nonram air channel. The two link-connected doors operate simultaneously by means of a hydraulic actuating cylinder which is mounted in the wall of the airscoop assembly. When the hydraulic cylinder is extended, the ram door is open and the aft butterfly door is closed, which allows ram air to be supplied directly to the carburetor. When the hydraulic cylinder is retracted, the ram door is closed, and the aft butterfly door is open, allowing the filtered air to enter the carburetor. The hydraulic actuating cylinder operating the two doors is controlled by a valve located on the bulkhead aft of the pilot's seat. On early C-47 airplanes, this valve is marked NON RAM AIR FILTER and has three positions: OPEN, CLOSED and OFF. On late C-47 airplanes, the positions are labeled FILTERED, UNFILTERED, and LOCKED. When operating this valve, turn the indicator to the desired OPEN or CLOSED position and leave it there for several seconds until the hydraulic actuator moves the doors. The doors remain positioned until the control valve is moved again. When the control is moved to the OPEN position, the nonram door is OPEN and the ram door is CLOSED. Carburetor heat is regulated by the position of the door in the air-intake chamber from controls located on the pilot's control pedestal. The carburetor air temperature is shown on the carburetor air temperature indicator installed on the instrument

panel in the flight compartment.

4-176. REMOVAL OF RAM-NONRAM TYPE (HYDRAULIC) FORWARD SECTION.

a. Disconnect all pipes from the carburetor airscoop assembly.

b. Loosen the rubber collar and clamps located between the duct and the carburetor adapter.

c. Release the lock fasteners securing the airscoop to the accessory cowling and to the supports forward of the firewall.

d. Remove the forward section of the carburetor airscoop.

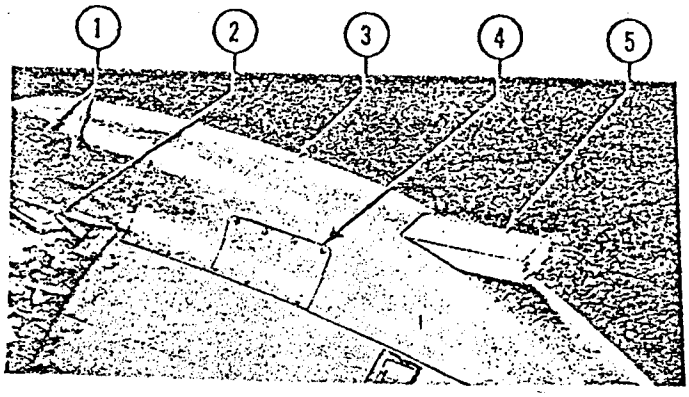

33,431

Figure 4-58. Ram-Nonram-Type Airscoop (C-47 Airplanes)

4-177. INSTALLATION OF RAM-NONRAM TYPE (HYDRAULIC) FORWARD SECTION.

a. Position the forward section of the airscoop to the cowling support.

b. Tighten the fasteners on the accessory cowling and on the supports forward of the firewall.

c. Connect and secure all pipes to the carburetor airscoop assembly.

d. Tighten the rubber collar and clamps on the duct and on the carburetor adapter.

Key to Figure 4-58

Item	Nomenclature
1.	Ram-Nonram Mechanism Access Covers
2.	Carburetor Air Intake Throat
3.	Oil Tank Dipstick
4.	Oil Tank Filler Neck Access Cover
5.	Carburetor Nonram Air Filter

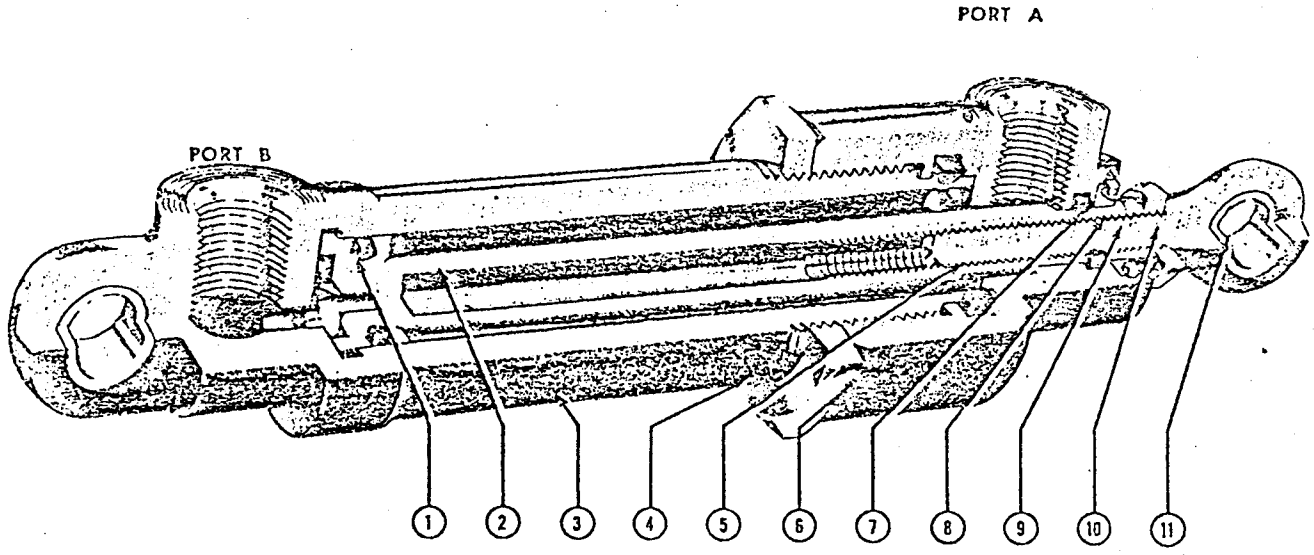

Figure 4-59. Ram-Nonram Type (Hydraulic) Actuating Cylinder

14-1

Key to Figure 4-59

Item	Nomenclature	Item	Nomenclature
1.	Packing	7.	Packing
2.	Piston	8.	Scraper
3.	Cylinder	9.	Snap Ring
4.	Locknut	10.	Locknut
5.	Packing	11.	Piston Rod End Fitting
6.	Cylinder Head		

4-178. REMOVAL OF RAM-NONRAM TYPE (HYDRAULIC) AIR FILTER.

a. Remove the screws from the plate holding the air filter.

b. Remove the air filter by sliding it back and out through the nonram opening.

4-179. INSTALLATION OF RAM-NONRAM TYPE (HYDRAULIC) CARBURETOR FILTER DOOR SYSTEM AIR FILTER.

Note

Always install the air filter with the fine screen side up.

a. Install the air filter to the holding plate located in the nonram scoop opening.

b. Secure the screws to the holding plate and air filter.

4-180. RAM-NONRAM TYPE (HYDRAULIC) ACTUATING CYLINDER.
(See figures 4-56 and 4-59.)

4-181. The ram-nonram type hydraulic actuating cylinder is mounted on a bracket located on the left side of the airscoop and forward of the firewall. The actuating piston rod operates the doors in the airscoop assembly through a series of rods and levers. The actuating cylinder unit contains two ports connected to the hydraulic system pipes.

4-182. REMOVAL OF RAM-NONRAM TYPE (HYDRAULIC) ACTUATING CYLINDER.

a. Relieve the hydraulic system pressure by operating the wing flaps.

b. Remove the two access covers from the left side of the airscoop assembly and forward of the firewall.

c. Disconnect and cap the hydraulic pipes.

d. Remove the cotter pins and two bolts from the support bracket.

e. Remove the actuating cylinder from the airscoop assembly.

4-183. TEST PROCEDURE OF RAM-NONRAM TYPE (HYDRAULIC) ACTUATING CYLINDER. The test procedure for the ram-nonram (hydraulic) actuating cylinder is performed as outlined in table 4-4.

TABLE 4-4
TEST - RAM-NONRAM TYPE (HYDRAULIC) ACTUATING CYLINDER

Test Port	*Piston Position*	*Test Pressure (Psi)*	*Max Leakage*
A	Retract.	1350	2 drops in 12 hours external; 10 drops per hour internal.
B	Extend.	1350	2 drops in 12 hours external; 10 drops per hour internal.

Packing friction at A and B – 40 psi maximum.

4-184. INSTALLATION OF RAM-NONRAM TYPE (HYDRAULIC) ACTUATING CYLINDER.

a. Position the actuating cylinder in the support bracket.

b. Tighten the two bolts and install the cotter pins, attaching the cylinder to the bracket.

c. Connect the hydraulic pipes to the outlet ports of the actuating cylinder.

d. Replace the two access covers in the left side of the airscoop assembly.

4-185. ADJUSTMENT OF DOOR-OPERATING MECHANISM OF RAM-NONRAM TYPE (HYDRAULIC) SYSTEM. If the ram door or butterfly-type door is not positioned properly, adjust the rods and linkage between the two doors. Adjustments are made to the doors by loosening the lock nut and turning the link rod in the bearing rod end.

4-186. RAM-NONRAM FILTER-TYPE (ELECTRICAL) SYSTEM. *(See figures 4-55 and 4-60.)* The operation of the ram-nonram filter-type (electrical) system is controlled from the flight compartment by means of two 5-position electrical switches. This system functions in the same manner as the hydraulically operated system, but it is controlled by limit and microswitches through the electrical circuit to an electric motor. A cam and cable system driven by the motor operates the forward and aft doors. The induction door is actuated by a cable from the pulley cam assembly, which is actuated by the cam motion of the pulley cam assembly.

4-187. OPERATION OF RAM-NONRAM FILTER-TYPE (ELECTRICAL) SYSTEM.

a. To obtain full hot air, full filter air, or full cold (ram) air, position the pointer of the selector switch, located on the panel in the flight compartment to the left of the pilot, to the required position.

b. To route cold (ram) air, the induction door must be in the down position to close off the hot air intake, and the rear door must be in the ram position to close off the nonram air duct.

c. To route cold (filtered) air, the induction door must be in the aft position to close the ram air duct, and the rear door must be in the nonram position to allow air to pass through the filter.

d. To route hot air, the induction door must be in the forward position to close off the ram air intake, and the rear door must be in the ram position to close off the nonram air duct. This permits hot air to be obtained from the exhaust collector ring and routed to the carburetor.

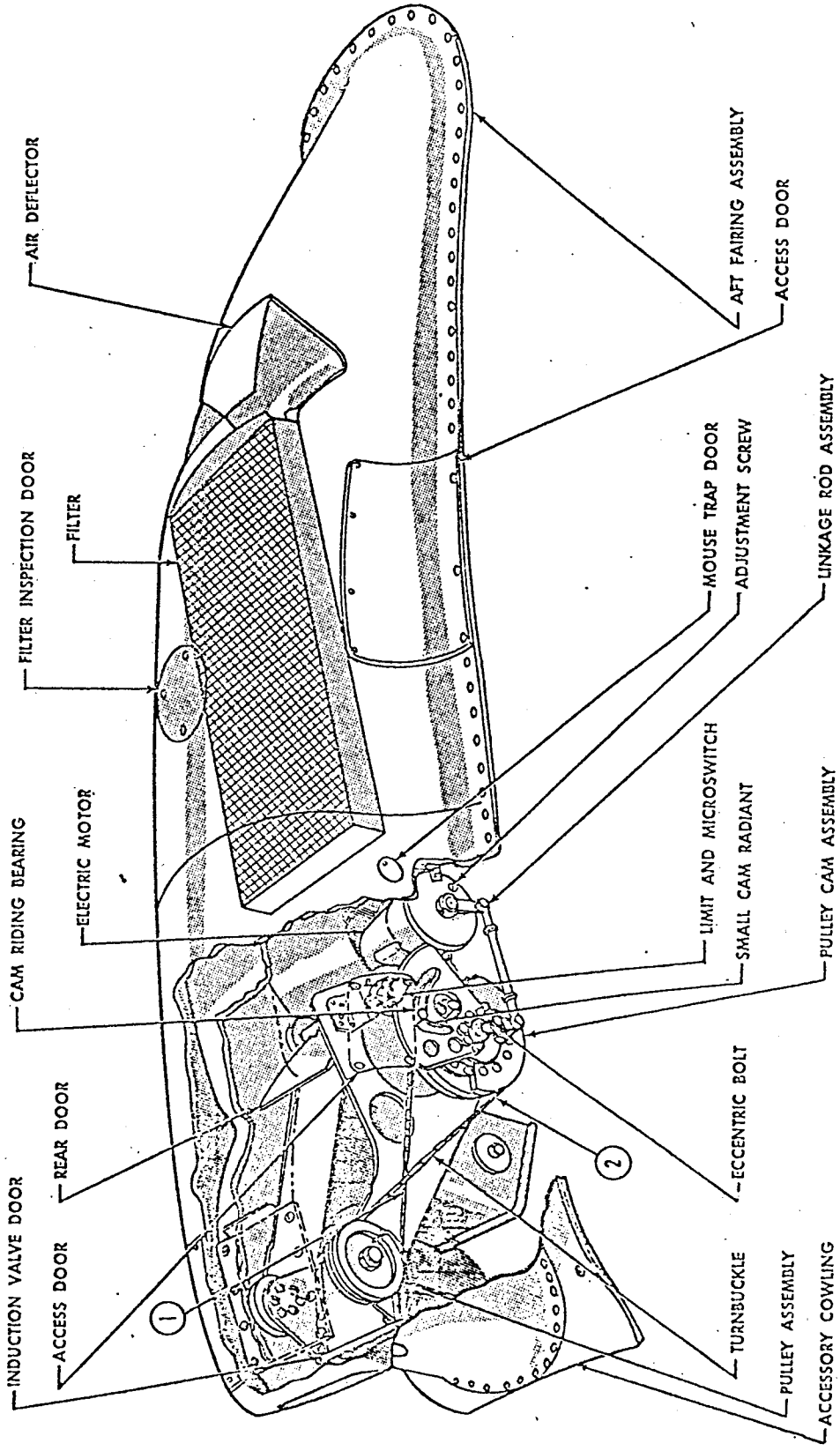

33,432

Figure 4-60. Electrically Operated Ram-Nonram Assembly (C-47B Airplanes) (Sheet 1 of 2)

4-188. REMOVAL OF RAM-NONRAM FILTER-TYPE (ELECTRICAL) AIRSCOOP.

a. Disconnect the de-icing pipes at the connections aft of the manifold.

b. Remove the rubber collar and clamps located between the duct and carburetor adapter.

c. Disconnect the electrical connector.

d. Release the top access door fasteners and remove the door.

e. Gain access through the top access opening to release the two fasteners (one in each corner), inside the forward end of the fairing.

f. Gain access through the small trap doors to release the two fasteners (one in each corner), inside the aft end of the fairing.

g. Release the four fasteners (two on the forward and two on the aft corners), on the outside of the fairing structure.

h. Remove the duct and the mechanism assembly.

4-189. ADJUSTMENT OF RAM-NONRAM FILTER-TYPE (ELECTRICAL) AIRSCOOP.

a. Disconnect the linkage between the motor and the pulley cam assembly.

b. Release the eccentric cam bolt mounted on the pulley cam assembly and adjust the rear door. Check the rear door for sealing against the door jamb in the CLOSED (UNFILTERED) ram position with the cam-riding bearing located 1/8-inch aft of the small cam. The door must be under no preload while being adjusted.

c. Adjust the turnbuckles in the cable assembly to synchronize the induction door to the down position, and the aft door to the ram position as outlined in step b.

Note

Cable tension must be from 8 to 10 pounds. A clearance of 1/32 inch must be maintained around both doors.

d. Release the motor clamp attaching bolts on the support bracket to allow the motor case to rotate during adjustment.

e. Adjust the linkage arm to a dimension of 6 5/8 (±1/16) inches and connect the linkage to the motor drive.

f. The electrical motor position adjustment of the ram-nonram filter-type airscoop is outlined in the following steps.

g. Operate the motor to move the door to the full forward (HOT AIR) position, until the forward limit switch stops the motor.

CABLE REF NO.	DOUGLAS CABLE ASSEMBLY DRAWING NO.	TYPE	CABLE LENGTH		CABLE SIZE	FITTINGS			
			(L_1)	(L_2)		(1)	(2)	(3)	(4)
1	2074407-C	A	425 1/2		3/32 dia 7x7 flex.	AN66953LH			
2	2207194	B	13		3/32 dia 7x7 flex.	2049220-16D5-3R	1152309		

TYPE A

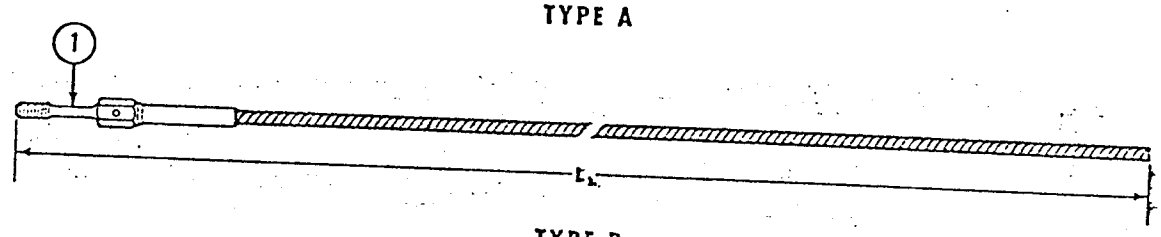

TYPE B

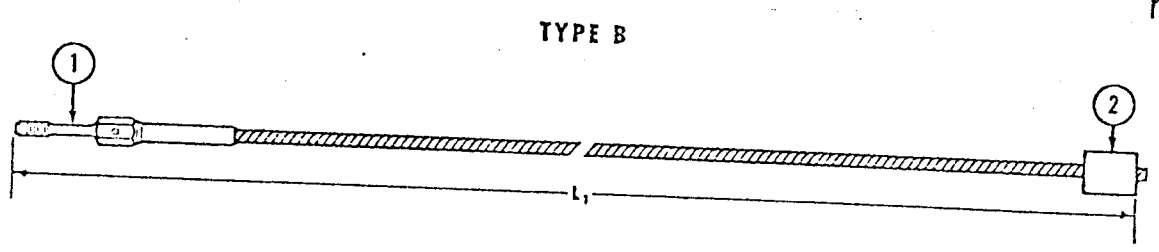

Figure 4-60. Electrically Operated Ram-Nonram Assembly (C-47B Airplanes) (Sheet 2 of 2)

33.433

h. Apply tension on the motor clamp attach bolts to maintain the motor position until the adjustment procedure is complete.

i. Reverse the motor by turning the selector switch to NONRAM. Adjust the rear limit switch in the motor to stop the doors at the correct location by moving the adjustment screw located on the driving face of the motor.

j. Tighten the motor clamp attach bolts.

k. Synchronize the two limit switches to operate simultaneously so that when the pointer of the selector switch indicates FULL COLD (RAM), the motor will stop in the same position whether it is or is not returning from the FILTER or HOT AIR position.

4-190. INSTALLATION OF RAM-NONRAM FILTER-TYPE (ELECTRICAL) AIRSCOOP.

a. Install the duct and motor in the airscoop assembly.

b. Secure the four fasteners (two forward and two aft), on the outside fairing structure.

c. Gain access through the small trap doors to secure the two fasteners (one in each corner), inside the aft end of the fairing.

d. Gain access through the access opening and secure the two fasteners (one in each corner) inside the forward end of the fairing.

e. Connect the electrical connector.

f. Replace the top access door and secure the fasteners.

g. Tighten the rubber collar and clamps between the duct and carburetor adapter.

h. Connect and tighten the de-icing pipes at the connections aft of the manifold.

4-191. MAINTENANCE OF RAM-NONRAM FILTER-TYPE (ELECTRICAL) AIRSCOOP MECHANISM.

a. Remove the attaching screws and the access covers for servicing the motor and replacing microswitches.

b. Remove the left access cowling for servicing the airscoop doors and the cam assembly. Disconnect the linkage between the motor drive and the pulley cam assembly.

4-192. MAINTENANCE OF DOOR-OPERATING MECHANISM FOR RAM-NONRAM FILTER-TYPE (ELECTRICAL) SYSTEM.

a. Check all bearing rod ends for free operation. Replace damaged parts.

b. Check cable pulleys and replace if damaged.

c. Check all cables and replace if damaged.

4-193. RAM-NONRAM FILTER-TYPE (MANUAL) SYSTEM. *(See figures 4-55 and 4-61.)* The manual-type ram-nonram filter system is installed on some C-47B and C-117 airplanes. The actuating mechanism of this ram-nonram system is manually operated. The air induction door is connected by means of rods, bellcranks, and cables to the control located on the right side of the pilot's control pedestal. The aft door, which opens and closes the nonram air duct, is positioned automatically from the pressure differential existing within the airscoop assembly. HOT, RAM, and FILTERED air selection is made by the control levers located on the pilot's control pedestal. The air controls incorporate a locking lever to maintain any selected airflow position. The airscoop ducts, the external appearance, and the functions of this carburetor air induction system are the same as the electrically operated airscoop system, except for the actuating unit.

4-194. REMOVAL OF RAM-NONRAM FILTER-TYPE (MANUAL) AIRSCOOP. For removal of the airscoop duct assembly of the manual-type ram-nonram filter airscoop, refer to paragraph 4-188.

4-195. INSTALLATION OF RAM-NONRAM FILTER-TYPE (MANUAL) AIRSCOOP. For installation of the airscoop duct assembly of the manual ram-nonram filter-type airscoop refer to paragraph 4-190.

4-196. MAINTENANCE OF DOOR-OPERATING MECHANISM OF RAM-NONRAM FILTER-TYPE (MANUAL) SYSTEM.

a. Check all bearings and rod ends for free operation, and replace damaged parts.

b. Check cable pulleys and replace if damaged.

c. Check all cables. Replace any cable that is damaged.

4-197. ADJUSTMENT OF DOOR-OPERATING MECHANISM OF RAM-NONRAM FILTER-TYPE (MANUAL) SYSTEM.

a. Adjust the turnbuckles on the cable assembly to a tension of 8 to 10 pounds. A clearance of 1/32 inch must be maintained around both doors.

b. Adjust the push-pull rods on the firewall so that the two carburetor heat control levers are even when located in the RAM position. Allow springback clearance of 3/4 inch on both levers at the extreme travel position. Check induction door positions by listening for a definite clicking sound when the control levers reach the extreme position.

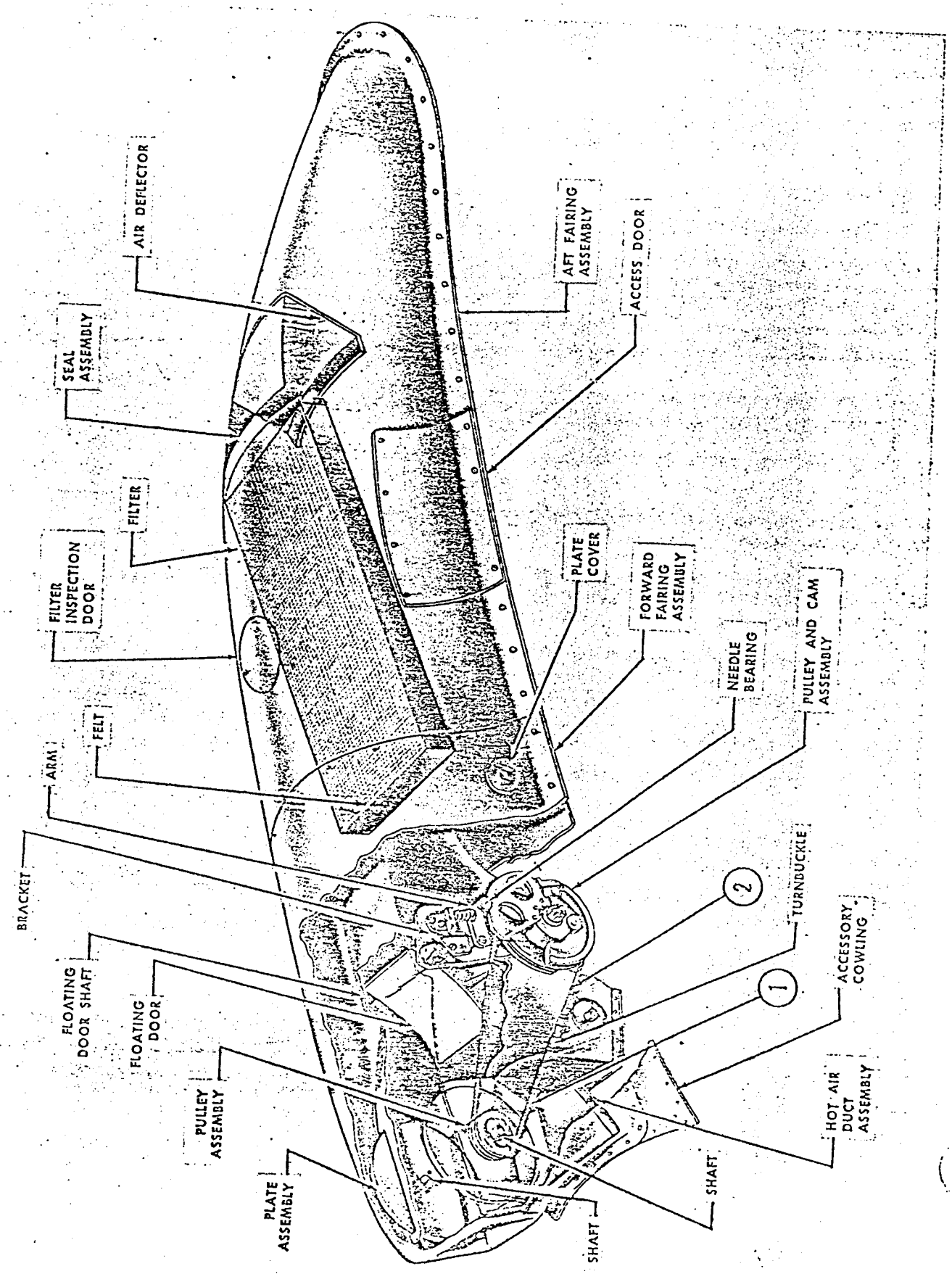

Figure 4-61. *Manually Operated Ram-Nonram Assembly - Key drawing (C-47B and C-117 Airplanes)*

33,434

c. On C-47 airplanes, with the manually controlled ram-nonram type air induction system, the control rod attaches to the pulley-cam assembly of the induction mechanism. The control lever lock on the control pedestal consists of a wedge-shaped disc attached to the brake lever. When the brake is pulled into a lock position, the thick part of the wedge binds against the carburetor air induction system control lever bellcrank discs, and through friction, holds the controls in position. When the brake is released, the thin part of the wedge permits the carburetor air induction system levers to move freely.

4-198. AIR FILTERS FOR RAM AND RAM-NONRAM TYPE SYSTEMS.

a. Each of the ram and ram-nonram type systems contains an oil screen type air filter which cleans the incoming air by contact with the oil coated baffles.

Note

Air filters are mandatory installations for the airplane during desert operations.

b. The filter of the ram filter-type, used on some C-47 airplanes, is shorter and wider than the filters used on the ram-nonram installations, and therefore the two types are not interchangeable. The filters used on the ram-nonram type are interchangeable for the electrically, hydraulically and manually operated systems.

4-199. MAINTENANCE OF AIR FILTERS FOR RAM AND RAM-NONRAM SYSTEMS.

a. Inspect oil filters daily for contamination and proper oiling.

b. Wash the filter in gasoline or in an approved type of cleaning fluid. When cleaning, rock the filter or agitate the cleaning fluid to insure removal of all dirt from the element.

c. Thoroughly dry the filter element.

d. Immerse the element from 2 to 5 minutes in a mixture of corrosion-preventive compound and lubricating oil, or in an approved substitute.

e. Drain the element from 2 to 4 hours to remove excess oil prior to installation.

Note

The element must be thoroughly dried prior to immersing it in oil, as the air filter coating can restrict the operating efficiency of the filter unit.

4-200. ENGINE PRIMER SYSTEM. *(See figures 4-63 and 4-64.)* The priming system of each engine consists of a solenoid valve mounted in the nacelle on the forward face of the firewall, the spider fitting mounted on the intake pipe of cylinder No. 1 near the blower case, and the piping. The inlet side of the solenoid valve is connected to the fuel pressure gage pipe, and when actuated, permits fuel at system pressure to flow to the

CABLE REF. NO.	DOUGLAS CABLE ASSEMBLY DRAWING NO.	NO. REQD	TYPE	CABLE LENGTH (L_1)	CABLE LENGTH (L_2)	CABLE SIZE	FITTINGS (1)	FITTINGS (2)	FITTINGS (3)	FITTINGS (4)
1	2074407-D-D	1	A	18 1/4		3/32 dia 7 x 7 flex.	AN66953RH	AN66953RH		
2	2074407-C-C	1	A	25		3/32 dia 7 x 7 flex.	AN66953LH	AN66953LH		

TYPE A

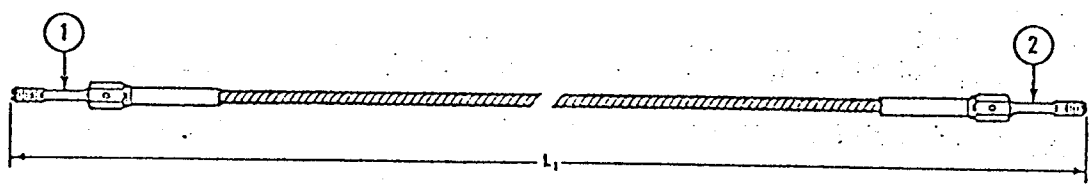

Figure 4-62 Manually Operated Ram-Nonram Assembly Cable Chart and Cable Assemblies (C-47B and C-117 Airplanes)

33,435

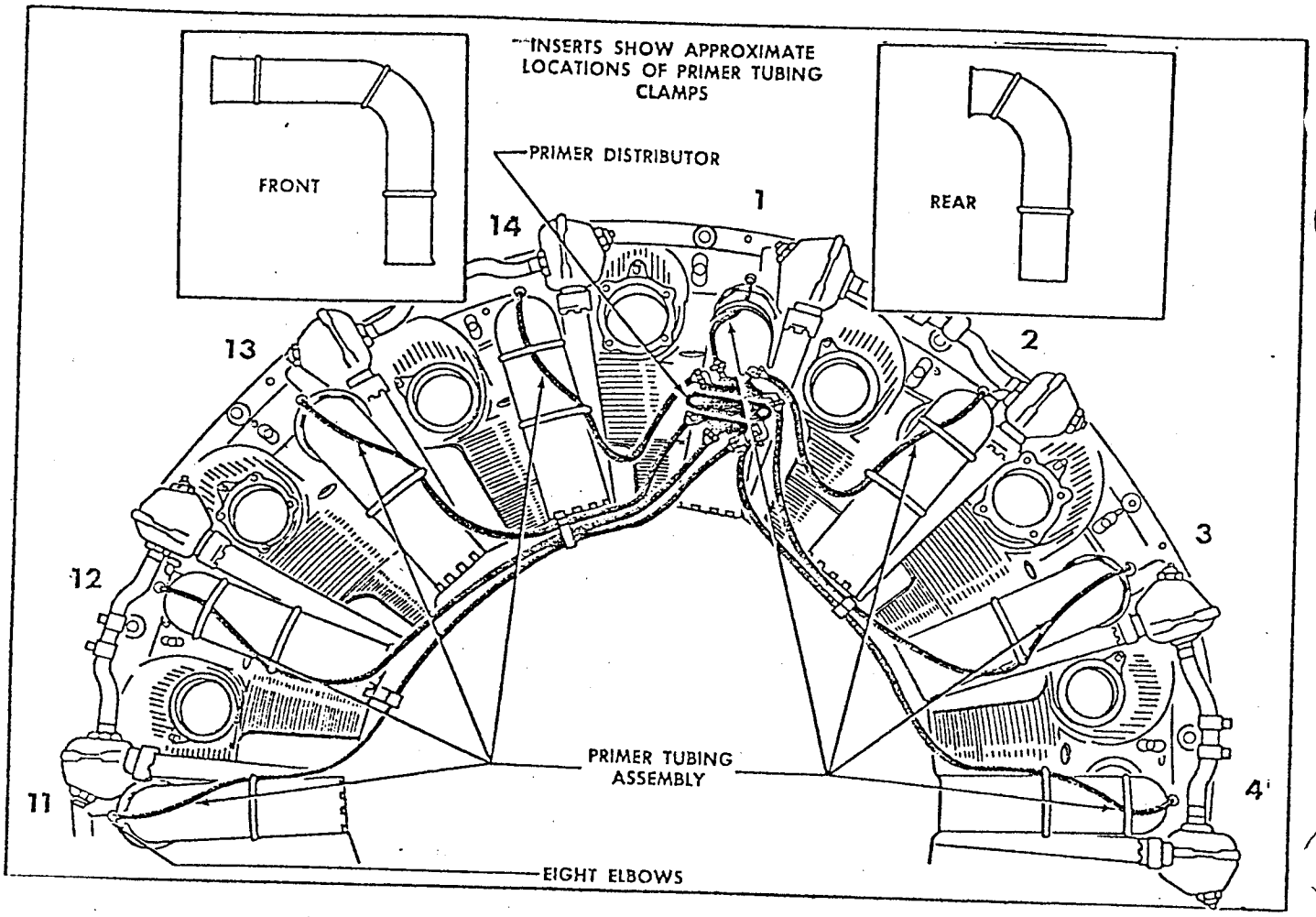

Figure 4-63. Priming System—Early Engines

33.654

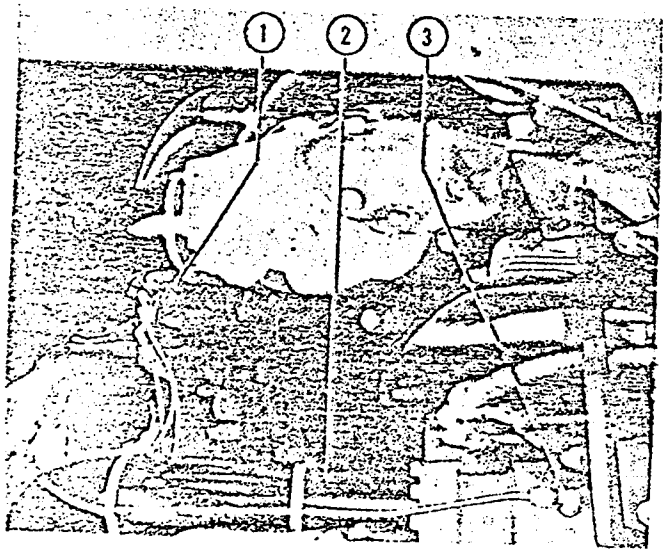

33.655

Figure 4-64. Cylinder Priming Pipes Installed

Key to Figure 4-64.

Item	*Nomenclature*
1.	Primer Spider
2.	Cylinder Inlet Line and Priming Line (small)
3.	Primer Inlet Connection

spider fitting where it is distributed to fittings in the intake ports of the top eight cylinders.

4-201. HOT FUEL PRIMING SYSTEM. *(See figures 4-65 through 4-67.)* Some airplanes have a hot fuel priming system which supplies hot fuel for engine priming during cold weather operations. The hot fuel priming units are installed in each nacelle on the forward face of the firewall. The engine fuel supply line is attached to the IN port of the hot fuel priming unit. The OUT port of the unit is connected to the prime spider manifold. The controls installed on the pilot's overhead switch panel include one oil dilution and two engine primer switches. The primer switches provide engine priming by selecting heated fuel or fuel at ambient temperatures. A fuel temperature indicator, connected to the OUT port of the heating unit, is located on the copilot's instrument panel. The indicator is a dual pointer instrument to indicate the temperature of fuel being supplied to prime each engine.

4-202. REMOVAL OF ENGINE PRIMER SYSTEM.

a. Remove the accessory cowling, as required.

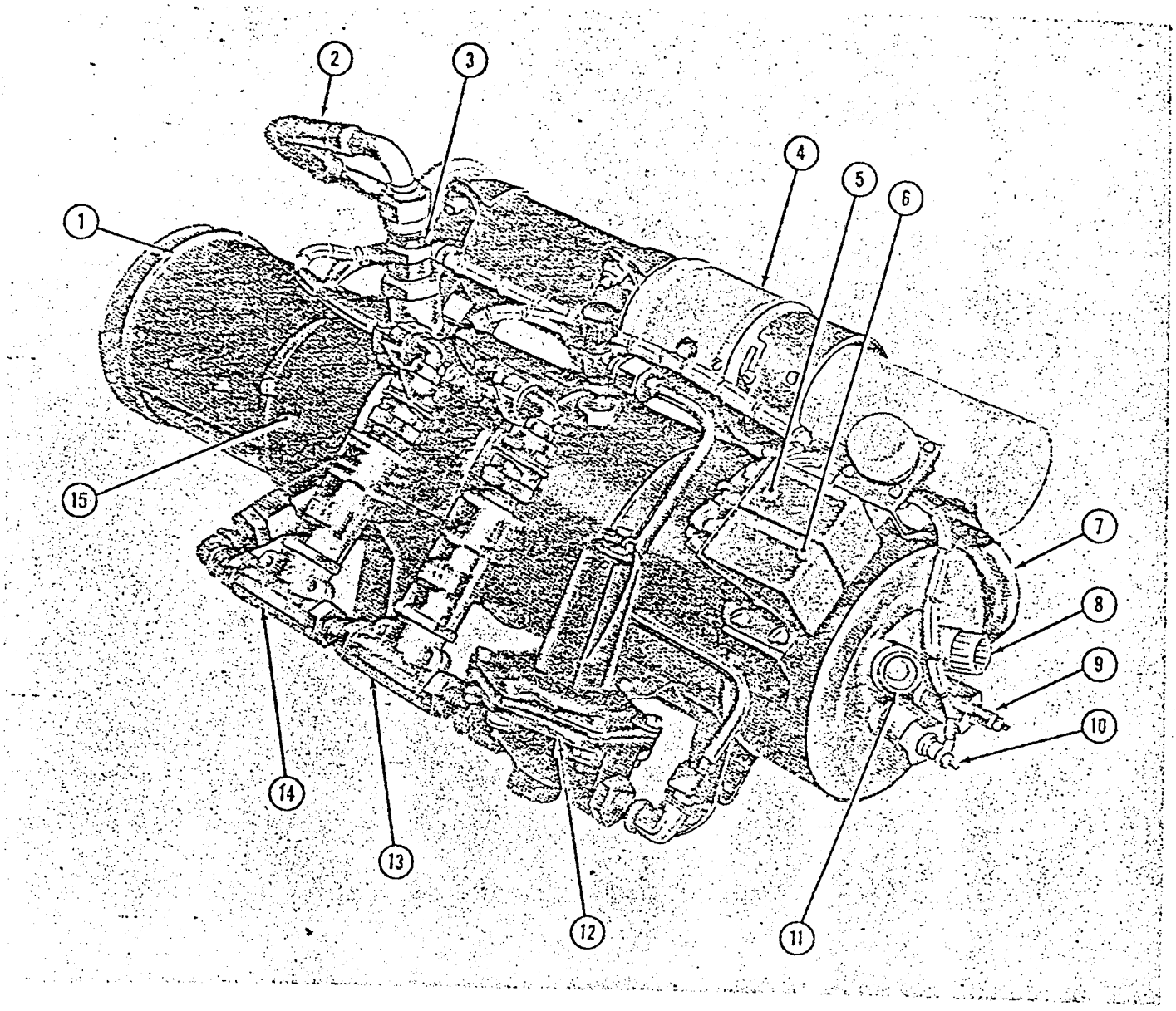

1. Air Blower Assembly, Axial Vane Type For Heater Combustion Chamber
2. Ignition Lead, From Ignition Assembly to Sparkplug
3. Sparkplug
4. Ignition Assembly
5. Cycling Relay
6. High Temperature Limit Relay
7. Combustion Chamber Exhaust Fittings
8. Heated Fuel Outlet Connection
9. Thermal Switch, High Limit (112 Degrees C)
10. Thermal Switch, Cycling (82 Degrees C)
11. Fuel Temperature Bulb Fitting
12. Fuel Pressure Regulator
13. Fuel Solenoid High Limit Shut-Off
14. Fuel Solenoid Cycling Shut-Off
15. Heater Combustion Chamber

Figure 4-52. Hot Fuel Priming Unit Assembly (Some Airplanes)

35,612

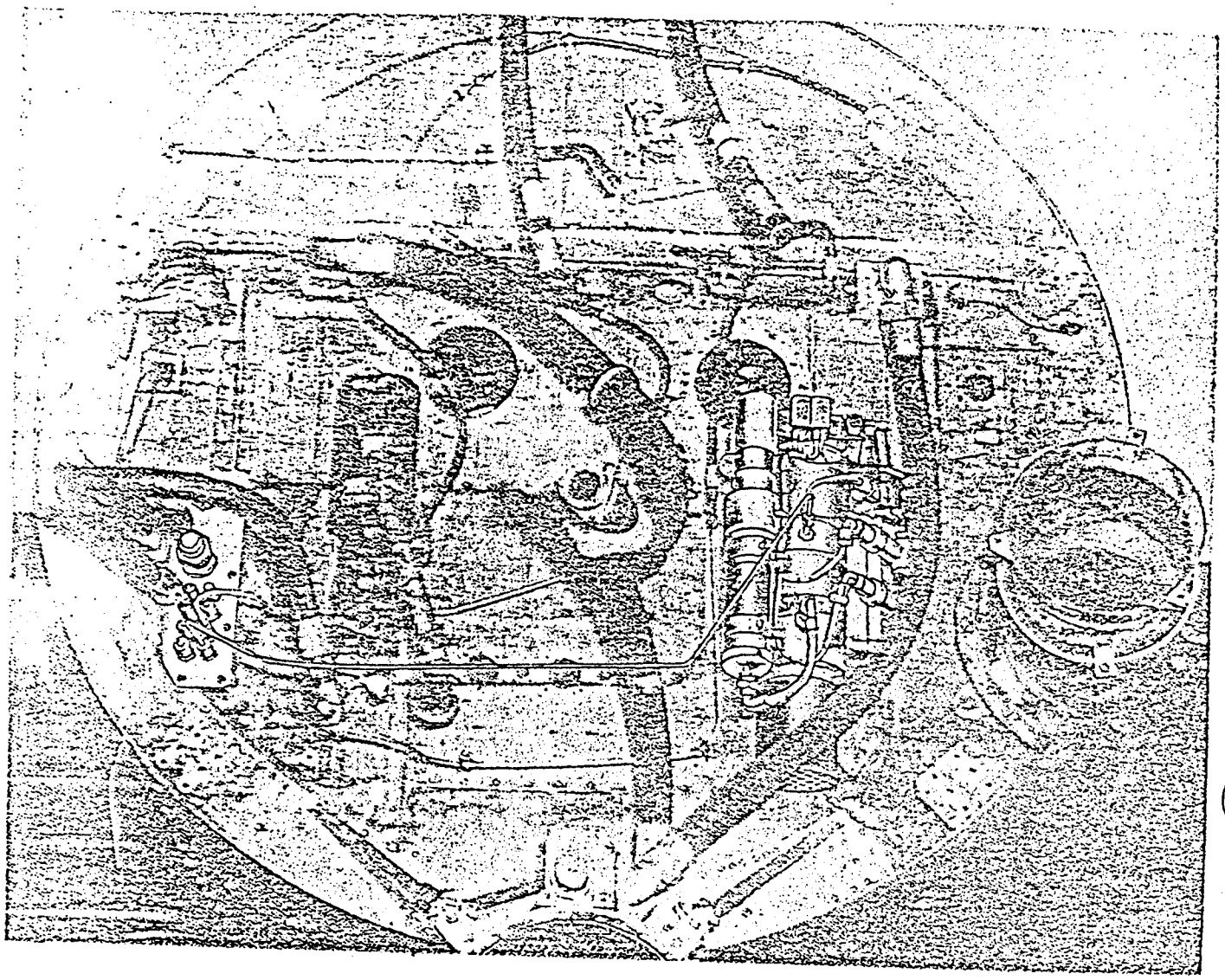

Figure 4-66. Hot Fuel Priming Unit Installed—Left Nacelle (Some Airplanes)

35,613

b. Disconnect the primer pipe at the primer distributor and at the cylinder to which it is attached.

c. Unfasten the clamp holding the primer pipe to the intake pipe and remove the primer pipe.

4-203. MAINTENANCE OF ENGINE PRIMER SYSTEM.

a. Check for dents, cracks, obstructions, and breaks.

b. Examine the condition of the threads in the elbows, unions, and couplings.

4-204. INSTALLATION OF ENGINE PRIMER SYSTEM.

a. Connect the primer pipe at the primer distributor and at the cylinder.

b. Fasten the clamp to the intake pipe and the blower section.

c. Install the accessory cowling.

4-205. MANIFOLD PRESSURE SYSTEM. The manifold pressure system measures the pressure at which the fuel mixture enters the intake pipes of the engine. The control and the dual gage are located on the main instrument panel, center section.

4-206. IGNITION SYSTEM. *(See figure 4-68.)* The ignition system consists of two magnetos, a harness, and 28 spark plugs controlled by a dual ignition switch. The ignition system is completely self-contained, requiring no power from the airplane electrical distribution system except for starting and is isolated from all other circuits by conduit and shielding. In the dual ignition system of each engine, the left magneto fires the rear spark plugs and the right magneto fires the front spark plugs, on both banks of cylinders. The two synchronized magnetos generate the high

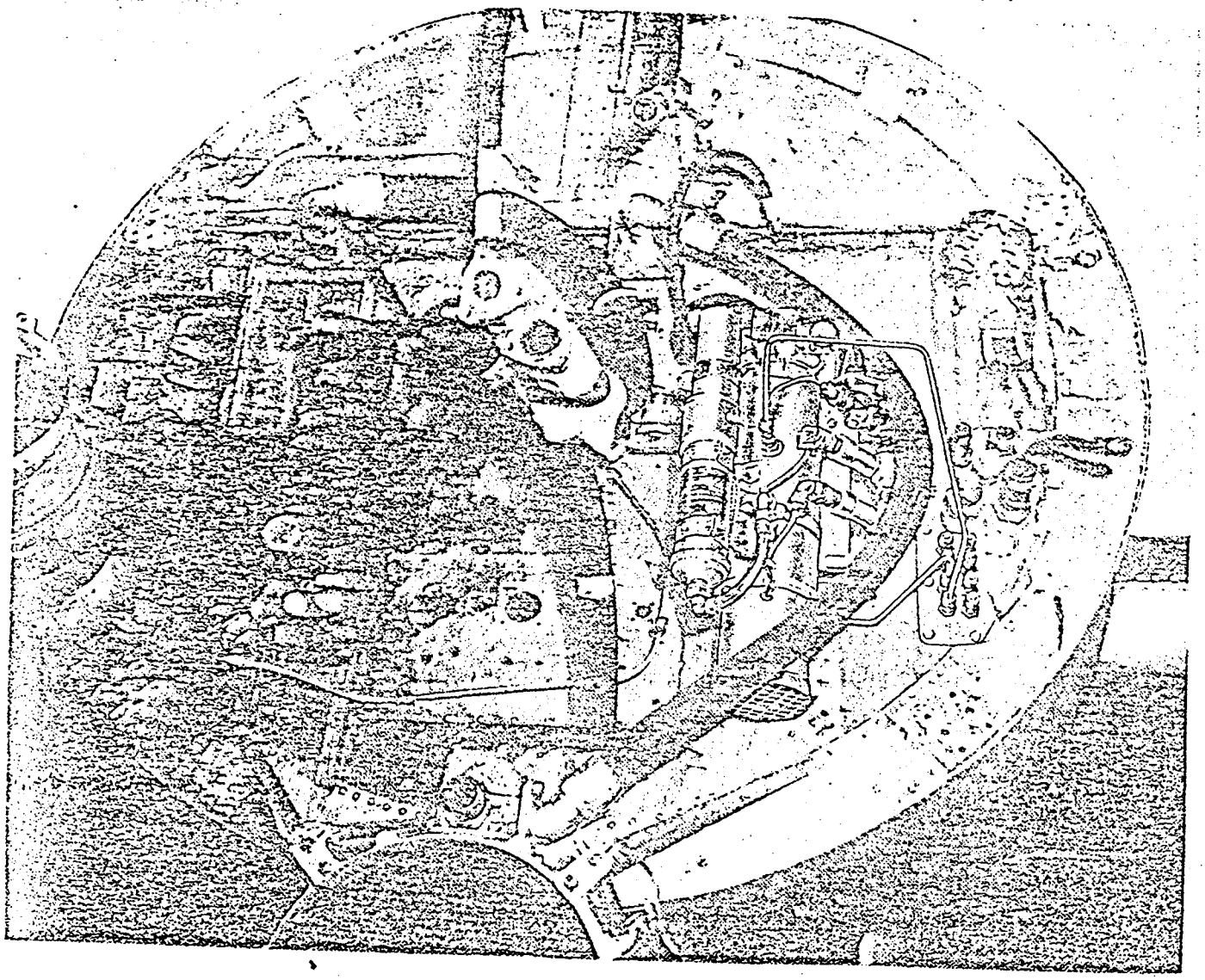

Figure 4-67. Hot Fuel Priming Unit Installed—Right Nacelle (Some Airplanes) 35,614

voltage supplied through two distributors and the harness assemblies to the spark plugs. The induction vibrator, during the starting phase of engine operation, augments the magneto output with pulsating d-c power which is boosted and distributed by the magneto and ignition system. Refer to Section XII for the system wiring diagram.

4-207. LUBRICATION OF CAM FOLLOWER WICK. For lubrication of the cam follower wick, refer to Section V.

4-208. INSPECTION OF BREAKER ASSEMBLIES. For inspection of the breaker assemblies, refer to Section V

4-209. MAGNETOS. *(See figure 4-69.)* Ignition is furnished by either two Scintilla magnetos or two Bosch magnetos located on the engine rear case. The right magneto fires the front spark plug and the left magneto fires the rear spark plug in each cylinder. The ignition cable assembly and the spark plugs are of the shielded type to prevent radio interference. Either of the two basic types of magnetos can be used, but do not install two different types on the engine. The induction vibrator is connected between the ignition switch and the right magneto. For additional information, refer to Sections VIII and XII.

4-210. REMOVAL OF MAGNETO.

WARNING

The ignition system is grounded through a connector located on the forward face of each

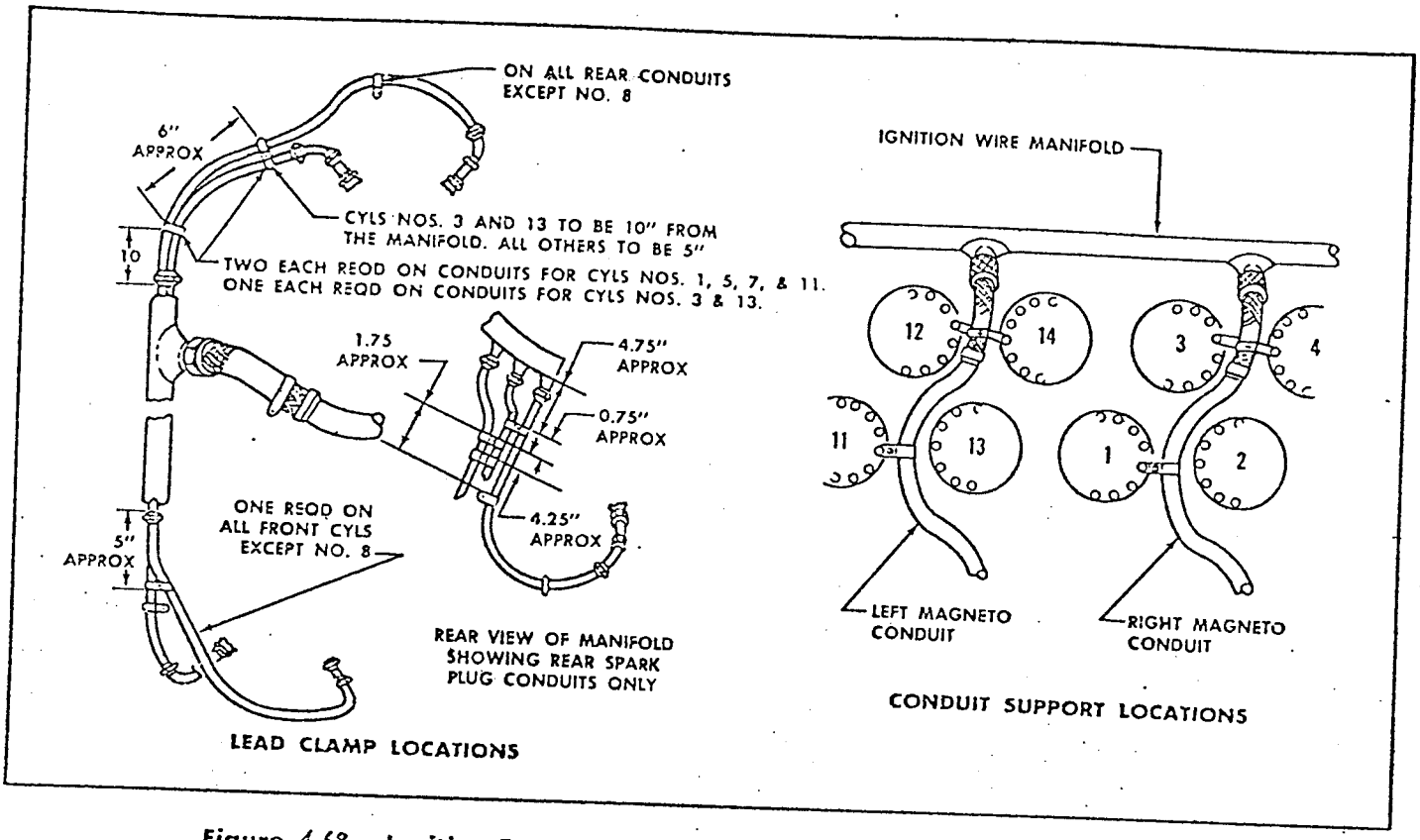

Figure 4-68. Ignition System—Lead Clamp and Conduit Support Locations 33,659

firewall. Removal of this connector leaves the magneto ON; precautions must be taken that the propeller is not rotated manually. A warning decal reading DANGER—WITH IGNITION PLUG OUT, IGNITION IS ON, is located adjacent to the ignition plug on each firewall. A warning decal is not required when self-grounding connectors are installed.

a. Remove the accessory cowling from the engine.

b. Disconnect the ignition switch lead from the magneto.

c. Remove the distributor block covers from the magneto. Disconnect and label all leads to the distributor block.

d. Cut the safetywire from the three mounting nuts and remove the nuts.

e. To remove the distributor block from the SF14-LU-8 magneto, loosen the four breaker housing retaining nuts and remove the two distributor block retaining screws and the block.

f. To remove the distributor block from the SF14-LN-3 magneto, remove the forward coil cover and loosen the block cover screws without breaking the carbon brush. Move the block vertically a short distance, until it is possible to tilt the block backwards to keep the carbon brush clear of the edge of the magneto's front case; remove the block.

4-211. INSTALLATION AND ADJUSTMENT OF MAGNETO. For magneto timing see paragraph 4-216.

4-212. SCINTILLA MAGNETO INSTALLATION. *(See figure 4-69.)*

Note

Bench-check magneto as outlined in paragraph 4-215 prior to installation.

a. Locate 25° BTC compression stroke, No. 1 cylinder, as outlined in paragraph 5-72.)

b. Turn the magneto drive shaft until a straight edge, placed across the flat step on the cam, aligns with the scribed timing marks on the rim of the breaker housing.

c. Hold the cam in this position and slip the spline drive into the engine drive, with the mounting studs centered in the elongated slots in the magneto mounting flange.

d. If the magneto and engine splines do not line up, turn the magneto through one complete revolution, and again install the magneto, with the cam aligned with the scribe marks. The SF14LN-3 Scintilla magneto contains six different spline settings. Repeat this procedure until the magneto is properly positioned.

e. Install and fingertighten the three mounting washers and nuts when the magneto is properly posi-

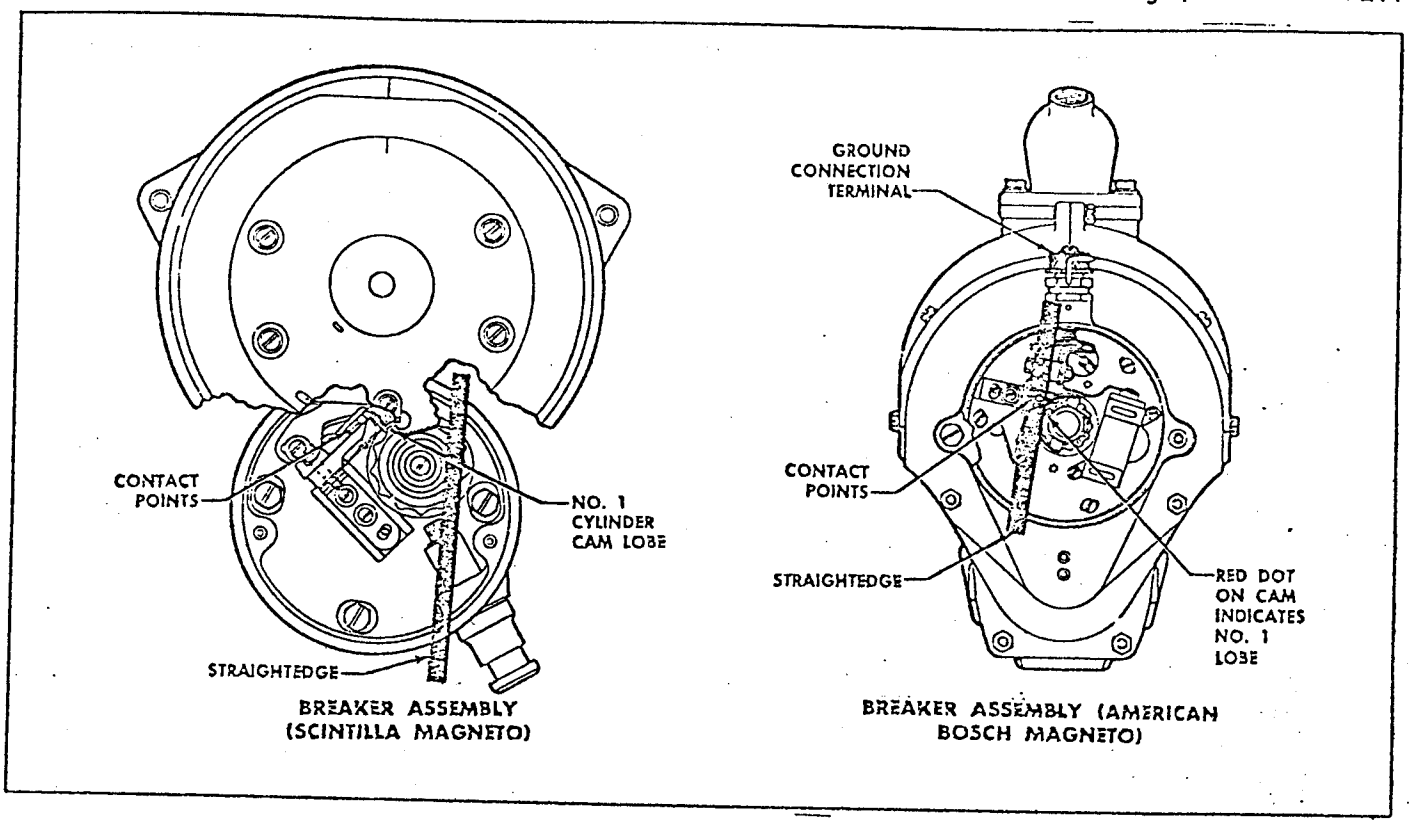

Figure 4-69. Breaker Assembly—Scintilla and American Bosch Magnetos

tioned with the mounting studs centered in the elongated slots.

f. Time the magneto to the engine as outlined in paragraph 4-216. Perform all fine adjustments by turning the magneto within the range permitted by the slotted base.

g. Torque the three mounting nuts to 115 to 125 inch-pounds (lubricated torque) and safety with lockwire.

h. Check the magneto timing again after the mounting nuts have been secured to make certain that the final setting has not changed.

4-213. BOSCH MAGNETO INSTALLATION.

a. Locate 25°BTC compression stroke, No. 1 cylinder, as outlined in paragraph 5-72.)

Note

Bench-check magneto as outlined in paragraph 4-215, prior to installation.

b. Turn the SF14LU-7 or -8 Bosch magneto drive shaft until a straight edge, placed across the flat step on the cam collar, aligns with the scribed marks on the rim of the breaker housing.

c. Hold the cam in this position and slip the magneto spline into the engine drive, with the mounting studs centered in the elongated slots in the magneto mounting flange.

d. If the magneto and engine splines do not line up, turn the magneto drive shaft until the cam has made one complete revolution. Again align the cam step with the scribe marks and install the magneto. The magneto has four different spline settings; therefore, repeat this procedure until the magneto is properly positioned with mounting studs centered in the elongated slots.

e. Install and fingertighten the three mounting washers and nuts when the magneto is properly positioned. Proceed with the installation as outlined in paragraph 4-212, steps e and subsequent.

4-214. FINAL INSTALLATION OF MAGNETO.

a. After the magnetos have been properly timed, synchronized, installed on the engine, and the nuts lockwired, install the breaker-compartment covers.

b. Install the distributor block, the insulation plate on the block, and connect the leads.

c. Install the distributor block split covers and secure the harness manifold elbow to the magneto.

d. Connect and secure the electrical wiring to the magneto.

e. Install the removed engine accessory cowling.

4-215. BENCH-CHECKING INTERNAL TIMING OF MAGNETO PRIOR TO INSTALLATION. *(See figure 4-69.)*

a. Remove the breaker assembly cover.

b. Insulate the magneto primary lead from ground, if necessary.

c. Connect the timing light by attaching the red lead to the breaker connector and the black lead to the magneto housing.

d. Rotate the magneto drive until the timing light comes on for the No. 1 lobe of the cam.

e. Hold the magneto exactly in this position, and place a straightedge on the cam step.

f. If the straightedge aligns with the stationary timing mark ($\pm 1/64$ inch), internal timing of the magneto is correct.

g. Do not use or attempt to repair magnetos with incorrect internal timing. Return them to the field maintenance shop for adjustment.

4-216. CHECKING MAGNETO-TO-ENGINE TIMING.

a. Locate the correct crankshaft timing position (25 degrees before top dead center compression stroke) of No. 1 cylinder.

b. Connect the respective red leads of the timing light to the magneto breaker point connectors and the black lead to the magneto housing. Turn the timing switch ON.

c. Turn the master ignition switch or the individual ignition switch ON.

d. Rotate the engine crankshaft opposite the normal direction of rotation one-quarter turn.

e. Move the pointer on the Time-Rite indicator to the top of the scale.

f. Rotate the crankshaft slowly in the direction of rotation, holding approximately 40 inch-pounds torque on the cam retaining screw head opposite the direction of cam rotation, until the timing light illuminates for the No. 1 lobe.

Note

The timing light must illuminate for each breaker point opening within ½ degree of the specified magneto-to-engine timing position.

g. If the magnetos are correctly timed to the engine, the Time-Rite pointer will indicate proper crankshaft position, (25° BTC compression stroke, No. 1 cylinder). Also, the step on the cam will align with the stationary timing mark ($\pm 1/64$ inch) when the straightedge is placed on the cam step.

h. Magnetos found to be incorrectly timed to the engine must be timed again prior to further engine operation.

Note

Do not move the breaker points or the breaker plate to accomplish magneto-to-engine timing.

4-217. IGNITION SYSTEM HARNESS AND WIRING. A radio-shielded ignition harness is installed on the engine nose section, and contains the high-tension electrical leads from the distributor blocks to the spark plugs in each cylinder. The numbers on the distributor blocks indicate the serial firing order of that engine. Each magneto is wired so that No. 1 wire on the distributor block routes to the first cylinder in the firing order (cylinder No. 1); wire No. 2 routes to the second cylinder in the firing order (cylinder No. 10). The firing sequence procedure of the engine is 1-10-5-14-9-4-13-8-3-12-7-2-11-6.

4-218. REMOVAL OF IGNITION SYSTEM MANIFOLD ASSEMBLY.

a. Remove the cylinders No. 2 and No. 12 before removing the ignition system manifold assembly.

b. Disconnect the harness leads at the spark plugs.

c. Remove cylinder No. 2 first, then cylinder No. 12, and secure the master rod in the center of the crankcase opening so that it cannot move sideways.

d. Unfasten the clamps holding the conduit to the blower case and the cylinder pads of cylinders No. 14, No. 4, No. 11, and No. 1.

e. Unfasten the two clamps which hold the cable to the crankcase front section.

f. Loosen the knurled nut holding the conduit to the manifold and remove the manifold from the engine, turning the conduit as it passes between the cylinders.

4-219. INSTALLATION OF IGNITION SYSTEM MANIFOLD ASSEMBLY.

a. Install the ignition cable before cylinders No. 2 and No. 12 are installed.

b. Position the assembly on the engine by lowering the left conduit between No. 11 and No. 13 rear row cylinders, and No. 14 cylinder and No. 12 cylinder pad of the front row.

c. Lower the right conduit between No. 1 and No. 3 rear row cylinders, and No. 4 cylinder and No. 2 cylinder pad of the front row.

d. Attach the left manifold conduit brackets to the first cylinder flange stud above the crankcase parting surface on cylinder No. 12, to the first cylinder flange stud below the crankcase surface on cylinder No. 14,

Figure 4-70. Magneto Installed

33,665.

Key to Figure 4-70

Item	*Nomenclature*
1.	Magneto Blast Tube
2.	Mounting Flange
3.	Ignition Conduit to Spark Plugs
4.	Ground Connection
5.	Breaker Housing Cover

nd to the first cylinder flange stud below the parting urface on cylinder No. 11.

e. Attach the right flange conduit brackets to cylnders No. 2, No. 4, and No. 1 in the manner decribed for the left conduit brackets in step d.

f. Install cylinder No. 12, then cylinder No. 2 on he engine.

g. Install all the spark plug leads.

-220. REPLACING IGNITION LEADS. Replace nition leads, as outlined in the following steps.

a. Disassemble the magneto so that the distributor ock is accessible.

b. Loosen the piercing screw in the distributor block r the applicable lead to be replaced.

c. Remove the lead end from the distributor block.

d. Strip approximately 1 inch of insulation from the distributor block end of the applicable lead.

e. Strip approximately 1 inch of insulation from the end of the replacement cable and twist the replacement cable to the end of the lead to be replaced. Solder the connection.

f. Coat the exterior of the replacement cable with electrical insulating and sealing compound, Specification MIL-I-8560.

Note

While pulling the lead through the harness, the lead should also be pushed from the opposite side to eliminate excessive force.

g. Remove the elbow adapter from the spark plug end of the lead, and pull the lead through the harness until the replacement lead has been pulled far enough through the ignition harness for proper installation.

h. Strip approximately 3/8 inch of insulation from the distributor block end of the lead and prepare the end for installation into the distributor block.

i. Strip approximately 1/4 inch of insulation from the spark plug end of the cable and assemble the integral seal and the cigarette.

j. Install a marker on the cable to indicate the applicable cylinder.

TABLE 4-5
IGNITION WIRE LENGTHS

NO. OF MAGNETO BLOCK	CYLINDER FIRING ORDER NO.	TOTAL LENGTHS	
		REAR	FRONT
1	1	87	72
2	10	87	93
3	5	103	73
4	14	80	72
5	9	91	93
6	4	95	63
7	13	78	80
8	8	89	79
9	3	94	63
10	12	76	82
11	7	110	83
12	2	89	66
13	11	87	89
14	6	106	75

FOR LONG NECK MAGNETOS, ADD 1 1/8 INCHES TO GIVEN LENGTH

MODEL NUMBER	TYPE
SF14LN-4	LONG NECK
SF14LU-7	LONG NECK
SF14LN-3	SHORT NECK

33,186

k. Install the proper ferrule and seal on the cable. Install the distributor block and secure it.

l. Install the spark plug terminal sleeve and a cigarette. Replace all micalex-type (grey) cigarettes with ceramic-type (white) cigarettes.

m. When a distributor block or more than one cable is replaced, check for continuity and correct location of the leads in the distributor block.

4-221. MAINTENANCE OF IGNITION SYSTEM HARNESS. Inspect the harness installation for security of mounting, broken conduit, badly frayed shielding, and chafing. Replace a damaged wire as follows *(see table 4-5)*:

a. Remove the spark plug sleeve and conduit.

b. Disconnect the wire from the distributor block.

c. Loosen the large conduit nut and slide the conduit slightly toward the magneto.

d. Determine from which end of the harness removal of the wire can be accomplished, then splice and solder a new wire to the opposite end of the old wire.

e. Coat the new wire lightly with an approved silicone compound (such as Dow Corning DC-4 compound).

f. Pull the old wire out of the harness, and feed the new wire into it. *Do not* damage the insulation on the new wire.

g. Install the spring connecting sleeves to the spark plug end of the new wire. Remove enough insulation to permit the wire core to extend 1/8 inch through the wire opening in the sleeve.

h. Install the sleeve and bend the wire strands back over the wire opening in the sleeve.

i. After the sleeves have been installed, wipe them clean. Any dirt, grease, acid, or scratches left on these surfaces greatly reduces the flashover resistance.

j. After assembling the harness, check the continuity with a test ohmmeter.

4-222. SPARK PLUGS. For information concerning the spark plugs, refer to Section V.

4-223. EXHAUST SYSTEM. *(See figures 4-71, 4-72 and 4-89.)* Each cylinder exhaust port is fitted with a short stack secured to the head by one stud. Seven long and seven short connector tubes transmit the exhaust gases from the short stacks to the collector ring. This ring is composed of seven graduated size sections and joined by clamp rings. A 2-piece flexible coupling connects the exhaust collector ring to the tailpipe, and with the exception of the tailpipe, all of the preceding mentioned units are interchangeable between the right and left engines. Tailpipes for the steam boiler and for the hot air muff-type heat exchangers are installed on the right and left nacelles, but due to the related systems and mounting requirements, the units are not interchangeable. All the items of the exhaust system are fabricated by welding of the corrosion-resistant steel seams.

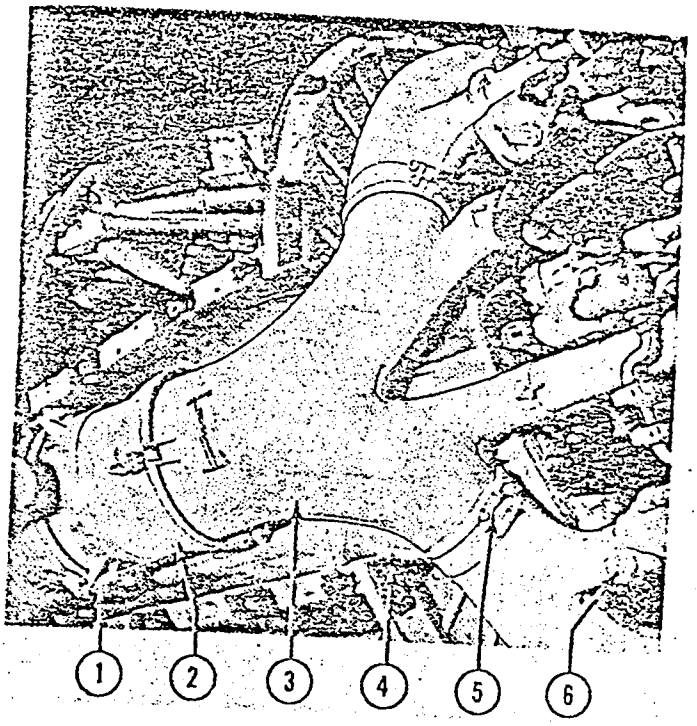

33,656

Figure 4-71. Exhaust Collector Ring Installed

Key to Figure 4-71

Item	*Nomenclature*
1.	Clamp Assembly
2.	Telescoping Flange
3.	Main Segment
4.	Engine Diaphragm
5.	Clamp Assembly
6.	Clevis Pin and Washer

4-224. EXHAUST COLLECTOR RING. *(See figure 4-89.)* The exhaust collector ring is a welded corrosion-resistant steel assembly made of seven sections, each section collecting exhaust from two cylinders. Stacks are secured with welded clips and located between the cylinders and the collector ring.

4-225. REMOVAL OF EXHAUST COLLECTOR RING.

a. Remove the accessory cowling by releasing the fasteners.

b. Remove the upper and lower clamps from between the main exhaust unit (to which the tailpipe attaches) and the collector ring segments on either side of the unit.

c. Disconnect the main exhaust unit from the engine-blower case brace bracket.

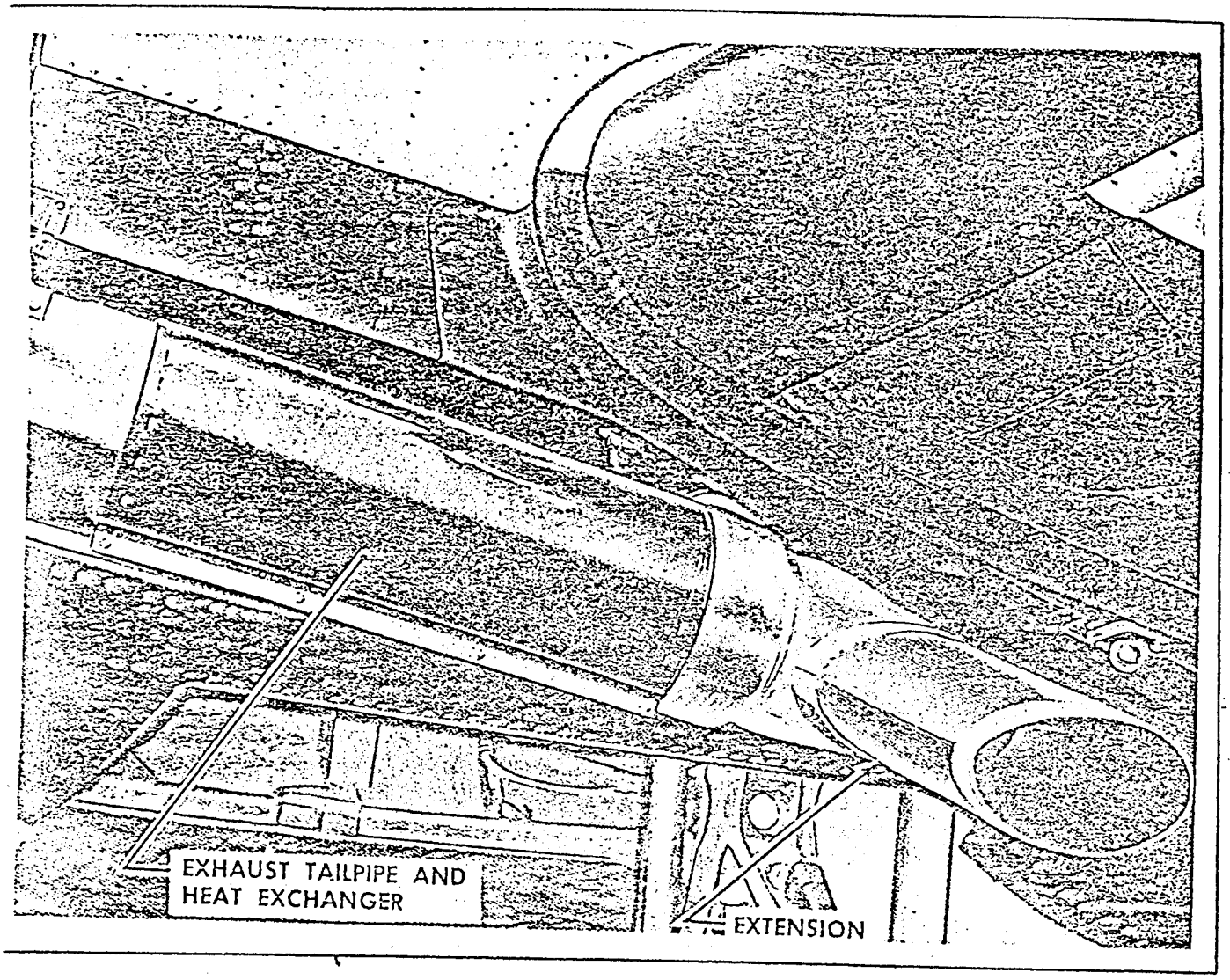

Figure 4-72. Exhaust Tailpipe Installed

33,657

d. Remove the cotter and pin from the attach point ı the sleeve between the collector ring port and the ·o engine exhaust ports.

e. Remove the three spring-loaded bolts from the rward connection of the telescoping expansion joint ı the tailpipe.

f. Pull the main exhaust unit back to clear the short ıck on the engine exhaust ports, and remove the ıit clear of the engine.

g. Remove the six remaining segments of the exaust collector ring by disconnecting each segment :om its engine-blower case brace; remove the cotter nd pin from the connection on the sleeves between ıe collector ring and the engine exhaust ports. Each :gment can be pulled and removed when these two ɔnnections are disconnected.

226. MAINTENANCE OF EXHAUST COLLECTOR RING.

a. Examine the exhaust collector ring, mounting ıgs, and tailpipe for cracks or signs of excessive burning.

b. Use stainless steel self-locking nuts on the engine exhaust port studs.

c. Weld minor cracks or holes.

4-227. INSTALLATION OF EXHAUST COLLECTOR RING.

a. Connect and secure the segments of the exhaust collector ring. Use new bolts, nuts, cotters, and pins when installing replacement collector parts.

b. Attach and secure the main exhaust unit to the engine exhaust ports.

c. Connect the three spring bolts to the forward connection of the 2-piece flexible coupling on the tailpipe.

d. Install and secure the cotter and pin to the attach point on the sleeve between the collector ring port and the two engine exhaust ports.

e. Connect the main exhaust unit to the engine-blower case brace bracket.

f. Tighten and secure the upper and lower clamps

between the main exhaust unit and the collector ring segments.

g. Install the accessory cowling sections that were removed and secure the fasteners.

4-228. EXHAUST TAILPIPE. *(See figure 4-72.)* The exhaust tailpipe is a welded corrosion-resistant steel assembly, consisting of the exhaust pipe and a muff-type heat exchanger. On some C-47 airplanes equipped with the steam-type heating system, the muff-type heat exchanger is replaced with a boiler installation in the right tailpipe assembly.

4-229. REMOVAL OF EXHAUST TAILPIPE.

a. Disconnect the bolts from the brackets and links.

b. Remove and lift out the tailpipe heat exchanger assembly.

4-230. MAINTENANCE OF EXHAUST TAILPIPE. Replace the damaged tailpipe and the muff-type heat exchanger assembly.

4-231. INSTALLATION OF EXHAUST TAILPIPE.

a. Secure the extreme aft and the side adjustable links to the proper bracket; insert a bolt through the bracket holes and the link head. Tighten and secure the nut against the bracket.

b. Insert the lug on the top forward end of the heat exchanger between the lugs of the telescope assembly on the nacelle shroud and insert a pin through the three aligned holes.

c. Align the lower lug with the stop between the lug and the firewall, and insert a bolt through the aligned holes.

d. Replace the pin of the flange projection on the top forward end of the heat exchanger with an AN4-12A bolt. Place five AN960-416 steel washers on the bolt between the flange and the side of the bracket.

e. Secure the middle top adjustable link as described in step a.

4-232. STARTING SYSTEM. The engine starting system consists of two switches located on the right electrical panel, two relay switches, two induction vibrators, and two electric inertia direct-cranking starters installed on the aft end of each engine.

4-233. Each starter is controlled by a relay, located in each firewall junction box, and two control switches. The starter drive jaw is actuated by a solenoid attached to the starter. In the event of solenoid failure, each starter is provided with a manual meshing cable and handle. Refer to Section VIII, and also to Section XII.

4-234. OPERATIONAL CHECKOUT OF STARTING SYSTEM.

a. Connect external power to the airplane, or if external power is not available, turn the master battery switch ON.

CAUTION

Before proceeding with the operational checkout, clear the area around the propellers of personnel or equipment.

b. Close the starter ENERGIZE switch. The starter motor operation will show a steady increase of speed.

c. Close the MESH switch before the starter has been energized 20 seconds, while continuing to hold the ENERGIZE switch closed. The starter will engage the engine and turn the propeller.

4-235. STARTER. A concentric combination inertial and direct cranking starter is installed on the aft side of each engine accessory drive case. The starter motor is a series-wound-interpole type which rotates in a clockwise direction. The starter consists of two rigidly connected assemblies; one assembly contains the motor, part of the reduction gearing, the flywheel, the drive jaw linkage, and the solenoid. The base unit contains the dry-plate clutch, planetary gearing, and the drive jaw. The clutch assembly is set under heavy spring tension to slip when overloaded, as when a liquid lock occurs in the engine.

4-236. REMOVAL OF STARTER.

a. Pull the control fuse in the main junction box.

b. Remove the engine accessory cowling.

c. Disconnect the electrical wiring from the starter terminals.

d. Disconnect the generator support bracket and the clamp.

e. Disconnect the fuel piping clamp.

f. Remove the mounting nuts from the studs around the starter mounting flange.

g. Remove the starter.

4-237. INSTALLATION OF STARTER.

a. Make certain that correct starter jaw clearance exists.

b. Position the starter on the mounting pad with one nut, check the electrical connections for alignment. Install the remaining nuts and secure.

c. Connect the fuel piping clamp.

d. Install the generator support bracket and the clamp.

e. Connect the electrical wiring and the conduit.

f. Install the engine accessory cowling.

g. Install the control fuse in the main electrical junction box.

4-238. INDUCTION VIBRATOR. An induction vibrator is installed on the upper inboard member of each engine mount. The vibrator connects to the right magneto grounding contact through the ignition switch wiring. When the starter MESH switch is closed, 24-volt d-c power is supplied to the vibrator coil and the breaker points. The vibrator, through the action of the rapidly oscillating breaker points, produces an intermittent d-c power flow, which is routed through the primary windings of the magneto coil, and the resultant high-tension output of the magneto is then distributed through the normal ignition system to the spark plugs, producing a hot shower of

TABLE 4-6
TROUBLE SHOOTING - PROPELLER SYSTEM AND CONTROLS

PROBABLE CAUSE	ISOLATION PROCEDURE	REMEDY
	VIBRATION IN PROPELLER.	
Loose propeller retaining nut.	Check propeller retaining nut for proper torque.	Torque to 1000 foot-pounds.
Loose propeller due to normal or excessive wear.	Remove propeller and check all attaching parts for wear.	Repair or replace out-of-tolerance parts.
Sludge buildup in dome.	Check dome, piston, and distributor valve for excess sludge.	Remove propeller dome and desludge.
Structural damage due to improper installation.	Check for nicks, scratches, and dents.	Repair or replace out-of-tolerance parts.
Blades not set at same angle.	Check blade angle setting (one tooth off on blade gear will change blade setting 8 degrees).	Remove propeller and reset blades.
Low pitch stop ring set to low in dome.	Check low pitch stop ring in dome.	Reset stop ring.
Low pitch stop ring stop worn or galled.	Check stop for wearing or galling.	Replace stop ring.
	EXTERNAL OIL SEEPAGE.	
Worn blade chevron seals.	Check blade seals.	Replace blade seals.
Worn dome barrel seal.	Check dome barrel seal.	Replace dome barrel seal.
Dome retaining nut loose.	Check dome retaining nut for proper torque.	Torque dome retaining nut to 720 foot-pounds.
Loose or worn rear hub rear cone assemblies.	Check spider to shaft seal and propeller retaining nut torque.	Replace chevron seals and torque propeller retaining nut to 1000 foot-pounds.
Dome breather seal damaged.	Inspect seal for damage.	Replace breather seal.
Damaged blade packing or improper chafing ring.	Inspect packing and chafing ring for condition.	Replace packing and chafing.

TABLE 4-6 (Continued)

PROBABLE CAUSE	ISOLATION PROCEDURE	REMEDY
	EXTERNAL OIL SEEPAGE (*Continued*).	
Defective barrel half seals.	Inspect seals for damage. Check for proper closure of barrel seal halves.	Replace seals. Remove burrs from parting surface of barrel half.
	FAILURE OF PROPELLER TO STAY IN DESIRED PITCH (HUNTING).	
Poor dome to piston seal.	Check seals.	Replace seals.
Broken or worn distributor valve rings.	Check rings.	Replace rings.
Distributor valve improperly installed.	Check to see if distributor valve rings were caught on dome assembly.	Replace rings.
	INTERNAL OIL LEAKAGE.	
Damaged or wrong gasket on governor mounting pad.	Check mounting pad gasket.	Replace gasket.
Gasket not in place on shoulder of adapter.	Check gasket for proper seating.	Replace gasket.
	FAILURE OF PROPELLER TO FEATHER OR UNFEATHER.	
Faulty electrical system.	Check control circuits of feathering pump, and low pressure setting of cutout switch.	Repair or replace faulty units.
Electrical circuit not completed to feathering pump.	Check wiring from feathering switch to pump for continuity.	Repair or replace wiring or switch.
Improper distributor valve installation.	Check distributor valve installation.	Repair or replace distributor valve. (Do not overtorque).
Damaged or improper gaskets between distributor valve and propeller shaft, and governor base and governor.	Inspect gaskets for damage and proper type.	Install new and correct-type gaskets.
Excessive propeller radial clearance.	Remove propeller and perform clearance check.	If radial movement is excessive (0.030) remove front section and replace out-of-tolerance parts.
Defective pump motor.	Check pump motor for operation and listen for bearing sounds.	Replace motor.

TABLE 4-6 (Continued)

PROBABLE CAUSE	ISOLATION PROCEDURE	REMEDY
FAILURE OF PROPELLER TO FEATHER OR UNFEATHER *(Continued)*.		
Defective pump.	Check for feathering operation (if pump motor operates and propeller does not start to feather, pump shaft is sheared).	Replace unit.
Oil level too low.	Check oil level.	Fill to proper level.
Distributor valve stuck in unfeather position.	Remove dome and check distributor valve setting.	Remove valve and clean thoroughly.
Shuttle valve in governor will not open.	Remove valve and check for dirt or grit.	Clean, repair or replace.
Leak at B-nut on propeller governor.	Check B-nut for tightness and flare on line for cracks.	Replace line or tighten B-nut.
Interference between breather pipe in propeller shaft and distributor valve oil transfer plate fillet.	Check clearance between fillet and breather pipe.	Rework transfer plate to obtain proper clearance.
Damaged packing for barrel spider.	Inspect packing for condition.	Replace damaged packing.
Damaged oil seal in rear cone spider shaft.	Inspect oil seal for condition.	Replace oil seal.
Oil line from tank or between feathering pump and governor clogged.	Check flow by disconnecting line at propeller governor and operate pump.	Flush line.
IMPROPER SYNCHRONIZATION.		
Governor control system improperly rigged.	Check proper rigging.	Rerig.
Sluggish pilot valve.	Disassemble assembly and examine pilot valve.	Clean, repair, or replace valve.
Sluggish governor relief valve.	Disassemble assembly and examine relief valve.	Clean, repair, or replace valve.
Sticky piston action in dome assembly.	Remove dome shell and inspect roller area on fixed cam for galling, pitting, and wear. Inspect rollers for freedom of movement and flat spots.	Clean and polish contact area or replace assembly.
Variation in engine transfer ring leakage.	Check rings.	Replace transfer rings.

TABLE 4-6 (Continued)

PROBABLE CAUSE	ISOLATION PROCEDURE	REMEDY
	LOW TAKEOFF RPM.	
Propeller governor adjustment low.	Check governor low rpm setting.	Reset governor low rpm setting.
Propeller control system improperly rigged.	Check propeller governor for proper rigging.	Rerig.
Improper setting of low pitch stop ring in dome.	Check low pitch stop ring setting.	Reset stop ring.
Low pitch stop ring worn or galled.	Check stop ring for burred or worn stop.	Replace stop ring.
Cable lock on governor pulley not tight.	Check pulley.	Tighten or rerig.
	PROPELLER OVERSPEEDING AT TAKEOFF.	
Propeller governor adjustment high.	Check propeller governor high rpm adjustment.	Adjust governor.
Incorrect rigging of propeller control system.	Check rigging.	Rerig.
Insufficient exercise of propeller control.	Repeat propeller check.	Repair or replace governor.
Throttle advanced too fast.	Repeat takeoff rpm check.	Advance throttle slowly.
Poor or incorrect gaskets between distributor valve and propeller shaft and between governor base and mounting pad.	Visually check gaskets.	Replace gaskets.
Sticking governor or pilot relief valve.	Bench test governor.	Replace governor.
	ROUGH PROPELLER OPERATION.	
Propeller unbalanced.	Check balance of propeller (effects will be greatest at high rpm).	Balance propeller.
Blade angle variance.	Check blade angle setting.	Reset blade angle.
Excessive propeller shaft runout.	Remove propeller and perform propeller shaft runout.	If runout exceeds limits given in procedures governing propeller shaft runout, remove engine.

sparks.

4-239. REMOVAL OF INDUCTION VIBRATOR.

a. Open the circuit breaker in the main junction box.

b. Disconnect the ignition harness quick-disconnects from the induction vibrator.

c. Remove the nut and washer securing the vibrator cover, and remove the cover and the metal seal.

d. Disconnect the d-c input lead from the terminal post in the vibrator, and disconnect the conduit.

e. Remove the four bolts and nuts from the clamps securing the vibrator to the engine mount frame, and remove the vibrator.

4-240. INSTALLATION OF INDUCTION VIBRATOR.

a. Position the vibrator on the engine mount frame so that all harnesses meet the vibrator fittings. Clamp the vibrator to the engine mount with the attaching hardware.

b. Connect the wiring and conduits.

c. Install the cover seal and the cover, and secure with the retaining nut and washer.

4-241. **FUNCTIONAL TEST OF STARTING SYSTEM.** For information concerning the functional test procedures of the starting system, refer to paragraph 4-234.

4-242. **PROPELLER SYSTEM.** Provision is made on the R-1830 series engines for mounting Hamilton Standard hydraulically controlled constant-speed, full feathering propellers as well as electrically operated variable-pitch and constant-speed propellers. The reduction gear housing and the propeller shaft incorporate the necessary oil passages to direct the oil flow to the hydraulically operated type propeller mechanism (see paragraph 4-86.)

4-243. The propeller absorbs the power output of the engine, and converts this power into thrust, to move the airplane through the air. The selection of rpm is mechanical from the control pedestal to the constant-speed control unit (see paragraph 4-21), and the control range is from 1200 to 2700 rpm.

4-244. **TROUBLE SHOOTING OF PROPELLER SYSTEM AND CONTROLS.** Trouble shooting of the propeller system and controls is accomplished as indicated in table 4-6.

4-245. TOOLS REQUIRED FOR REMOVAL AND INSTALLATION OF PROPELLER ASSEMBLY. The tools required for the removal and installation of the propeller assembly are listed in table 4-7.

4-246. REMOVAL AND INSTALLATION OF PROPELLER ASSEMBLY. *(See figures 4-73 through 4-78.)* The removal and installation of the propeller assembly are accomplished as outlined in the following paragraphs. The propeller as prepared for installation on

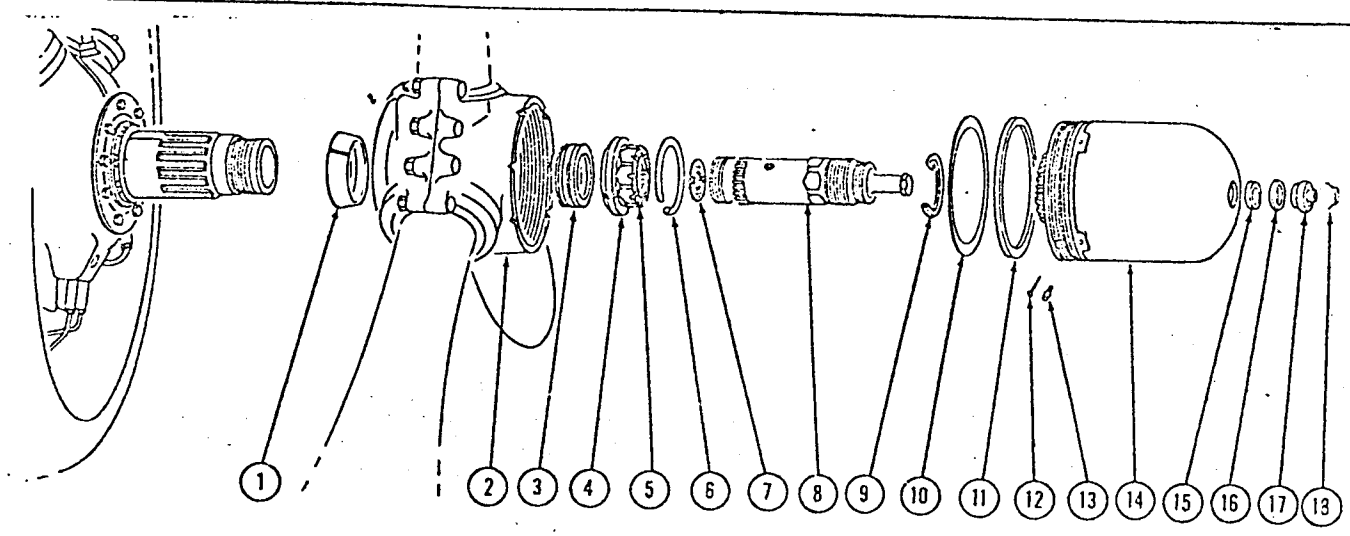

1. Rear Cone
2. Hub and Blades Assembly
3. Spider-Shaft Oil Seal Assembly
4. Front Cone
5. Propeller Retaining Nut
6. Hub Snap Ring
7. Oil Transfer Plate
8. Distributor Valve Assembly
9. Propeller Retaining Nut Lockwire
10. Dome Shim
11. Dome Seal
12. Dome Retaining Nut Lock Screw Cotter Pin
13. Dome Nut Lock Screw
14. Dome Assembly
15. Dome Plug Seal
16. Dome Breather Hole Washer
17. Dome Breather Hole Nut
18. Dome Breather Hole Nut Lockwire

Figure 4-73. Propeller Assembly

33.679

TABLE 4-7
TOOLS REQUIRED - REMOVAL AND INSTALLATION OF PROPELLER ASSEMBLY

Stock Number	Part Number	Nomenclature
5120-398-3561	HSP-666	Prop. Retaining Nut Wrench
5120-398-3559	HSP-455	Dome Retaining Nut Wrench
5120-398-3557	HSP-282	Distributor Valve Wrench
5120-176-2938	HSP-465	Dome Strap Wrench
5120-394-5085	HSP-2626	Blade Turning Bar
4920-394-5073	HSP-1332	Dome Lifting Handle
1730-508-6079	42G15767	Hoisting Sling
4920-212-3084	SWE8431	Base Plate
4920-398-3766	SWE54	Torque Handle
4920-398-3767	SWE63	Work Handle
4920-398-3778	SWE84317	Prop. Retaining Nut
4920-398-3802	SWE8635	Socket
4920-398-3817	SWE8205	Lift Assembly
5120-337-9652	SWE8100	Power Wrench
5120-398-3768	SWE67	Ratchet Adapter
5120-398-3779	SWE84319	Prop. Shaft Wrench
4920-143-8324	44D26138-50	Prop. Shaft Protector

The engine-propeller shaft consists of three subassemblies: the hub and blades assembly, the dome assembly, and the distributor valve assembly.

4-247. REMOVAL OF DOME AND DISTRIBUTOR VALVE ASSEMBLIES.

a. Turn the master and ignition switches OFF.

b. Remove the lockwire from the dome breather-hole nut.

c. Using the blade turning device, turn the blades to the full-feathered position to assist the oil drainage from the dome interior.

d. Remove the dome breather-hole nut, washer, and the dome plug seal. Drain the oil from the dome interior.

e. Cut and remove the propeller retaining nut lockwire, or the cotter pin from the dome retaining nut lockscrew.

f. Insert and tighten the dome lifting handle in the dome breather hole, being careful not to cross the thread.

CAUTION

Do not remove the distributor valve during removal of the dome assembly. Be sure to remove the retaining nut lockwire BEFORE turning the distributor valve, to avoid damage to the splines of the valve.

g. Loosen and back off the dome retaining nut, using a composite wrench and a 3-foot bar. Lift off the dome assembly on a line parallel with the shaft using care not to damage the distributor valve assembly.

h. Remove retaining nut and distributor valve lockwire. Using the composite wrench, loosen the distributor valve. Remove the distributor valve by hand.

i. Back off the propeller retaining nut two or three turns to relieve any compressive effect on the distributor valve by the shaft.

j. Use the composite wrench and adapter and back the distributor valve out by hand from the propeller shaft.

4-248. REMOVAL OF HUB AND BLADE ASSEMBLY.

a. Install the propeller hoisting sling.

b. Back off the propeller retaining nut and the attached front cone, using a composite wrench. This will bring the propeller forward on the shaft until the end of the threads is reached.

c. Turn the blades to reverse low pitch.

d. Remove the hub snap ring in the spider.

e. Remove the front cone and the propeller retaining nut as one unit.

f. Remove the spider-to-shaft oil-seal ring (chevron seal), seal and washer. Use a pair of small hooks made from stiff wire to facilitate removal of the seal without damage.

CAUTION

Be sure to perform this operation before installing the thread protector, or the hub and blade assembly will not slip over the protector.

g. Cover the propeller shaft with a thread protector, or wrap it with tape if the protector is not available.

h. Remove the hub and blades assembly from the propeller shaft.

i. Remove the anti-icing feeder tube assembly by disconnecting the fluid supply pipe, and removing the two lower studs on the engine thrust plate.

4-249. PREPARATION FOR INSTALLATION OF PROPELLERS. Before installing a propeller, visually examine all parts which are accessible, without disassembling the unit for damage and check for proper fit. All corrosion, all raised edges of nicks, burrs, cuts, galling, and scoring on the joining surfaces of the attaching parts must be carefully stoned down.

CAUTION

Remove all small metal particles after any stoning or dressing of the propeller parts. Clean with solvent, Federal Specification P-S-661, and dry thoroughly.

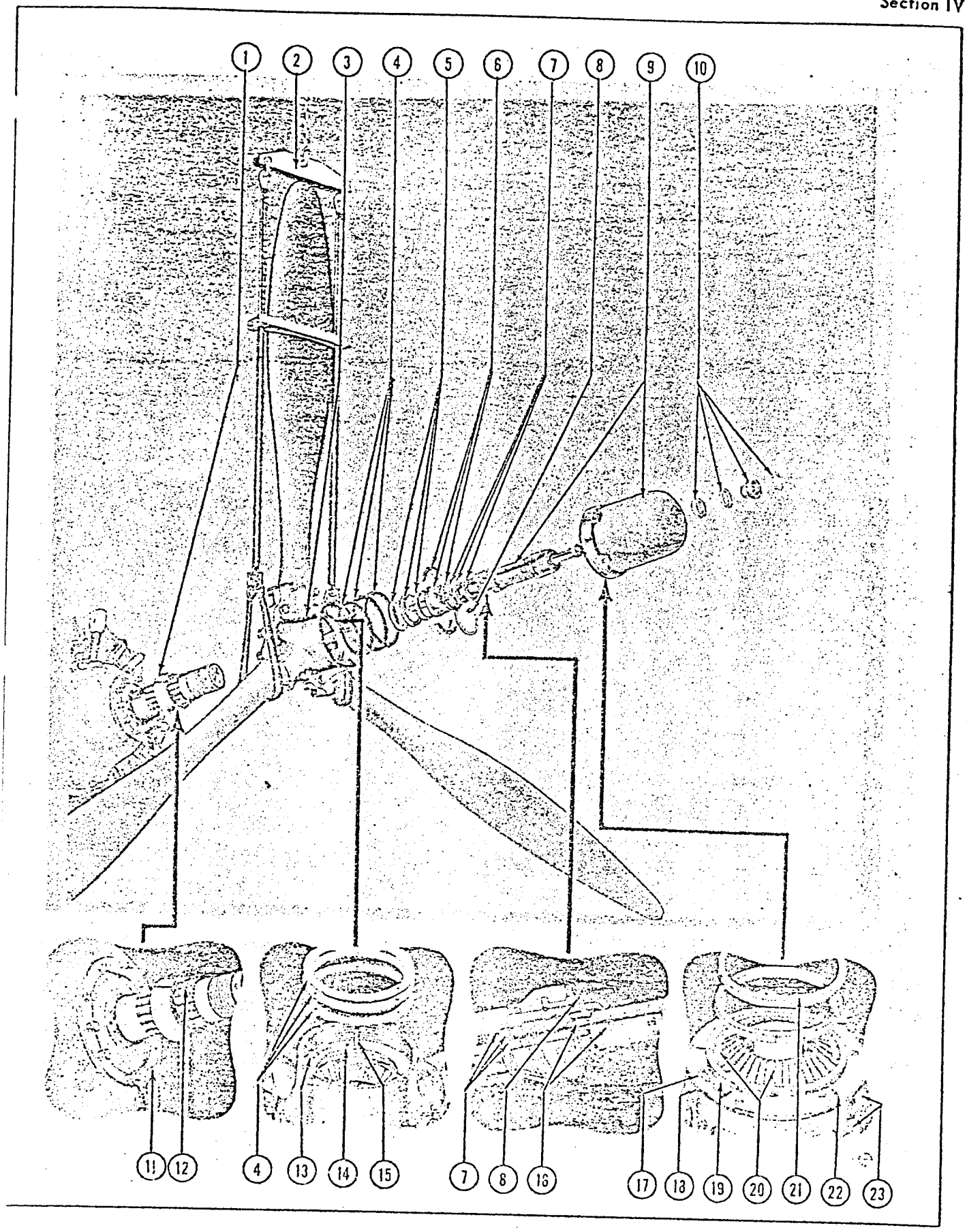

Figure 4-74. Propeller Installation Procedure

33.680

Key to Figure 4-74

Item	Nomenclature
1.	Rear Cone
2.	Propeller Sling
3.	Hub and Blade Assembly
4.	Gear Preload Shims
5.	Spider and Shaft Oil-Seal Washer (chevron packing), and Expander Ring
6.	Front Split Cone-Propeller Retaining Nut and Hub Snap Ring
7.	Oil-Seal Gasket, Distributor Plate, and Oil Tube Assembly (furnished with engine)
8.	Propeller Retaining Nut Lockwire
9.	Distributor Valve Assembly and Dome Assembly
10.	Dome Breather Hole Seal, Washer, Nut, and Lock Ring
11.	Anti-Icing Fixed Bracket and Feeder Tube Assembly
12.	Plugged Propeller Shaft Spline
13.	Hub Gear Preload Numbers
14.	Hub Balance Arrow
15.	Fixed Cam Locating Dowels
16.	Distributor Valve Housing Locking Splines
17.	Dome Gear Preload Numbers
18.	Dome and Barrel Sealing Ring
19.	Fixed Cam Stop Ring Flange Fixed Cam
20.	Rotating Cam Gear Stop Lug and Rotating Cam Gear
21.	Low-Pitch and High-Pitch Stop Rings
22.	Dome Balance Arrow
23.	Dome Retaining Nut and Lockscrew

Inspect the propeller shaft and threads for nicks, burrs, or minor damage. Dress down any imperfections with a fine stone and polish with crocus cloth. Wash the shaft with solvent; allow to dry thoroughly, and apply a light film of clean engine oil to both the inside and outside of the propeller shaft.

4-250. INSTALLATION OF ANTI-ICING EQUIPMENT.

a. Before mounting the propeller, install the anti-icing feeder tube assembly on the two lower studs on the engine thrust plate.

b. Connect the anti-icing fluid supply pipe to the feeder tube, and make certain that all the fittings are tight. The use of two wrenches is recommended for this operation.

Note

After completing the installation of the propeller on the engine, make certain that the feeder tube assembly will direct the flow of anti-icing fluid properly to the anti-icing slinger ring.

4-251. INSTALLATION OF HUB AND BLADE ASSEMBLY. Prior to installation of the propeller, the propeller shaft must be treated with corrosion-preventive compound, Specification MIL-C-11796A, to prevent corrosion of the engine propeller shaft due to exposure.

a. On new engines, the propeller shaft with the plugged groove end is usually in the top center position, therefore the propeller shaft, prior to propeller installation, must not be rotated due to engine piston positions in the cylinders.

b. Clean the propeller shaft and the thrust nut with dry cleaning solvent, Federal Specification P-S-661, and inspect the cleaned areas for corrosion.

c. If corrosion is present, remove the thrust nut and repeat the cleaning process, being careful not to permit any of the solvent to enter the engine.

d. Remove the corrosion by polishing the affected areas with crocus cloth, or with a small hand buffing wheel, using jeweler's rouge or a suitable substitute. Do not use a coarser type abrasive than that specified.

e. Clean the shaft thoroughly to remove any trace of corrosion and polishing agent residue.

f. In the event the shaft is pitted, further use and operation will depend upon the depth, character, and number of pits.

g. Fill the cavity between the thrust nut and the propeller shaft with corrosion-preventive compound, Specification MIL-C-11796A, Class 3.

h. Apply a thin coat of corrosion-preventive compound, Specification MIL-C-11796A, Class 3, to the propeller shaft.

i. Install a piece of 1/8-inch rubber sheeting, Specification MIL-R-6891, Class 2, in the slot of the rear cone. Use a razor blade or sharp knife, and trim the rubber to the contour of the rear cone cross section, being careful not to permit any rubber material to protrude beyond the surface of the cone.

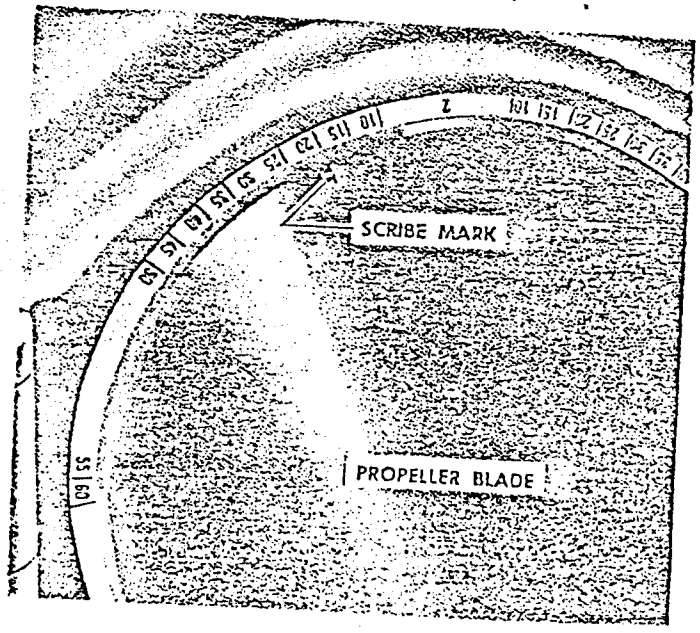

33,681

Figure 4-75. Propeller Blade Angle Check

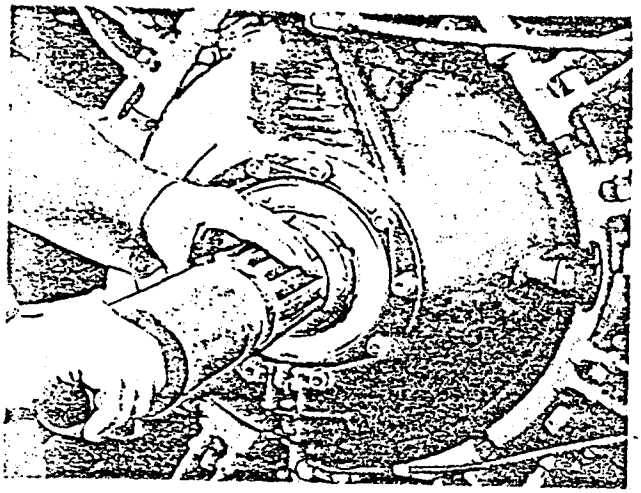

Covering Shaft With Thread Protector

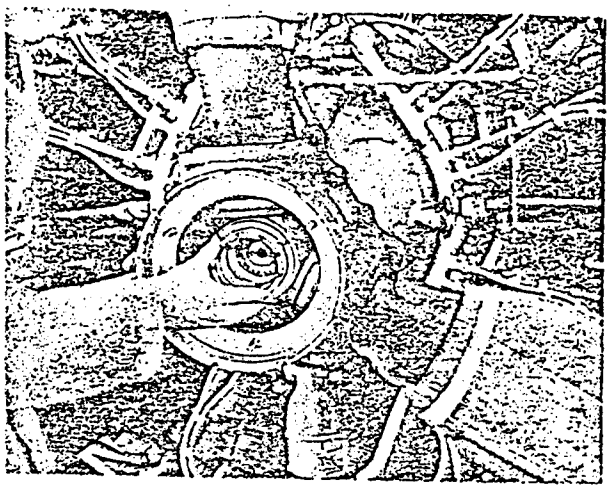

Starting Retaining Nut and Cone on Shaft

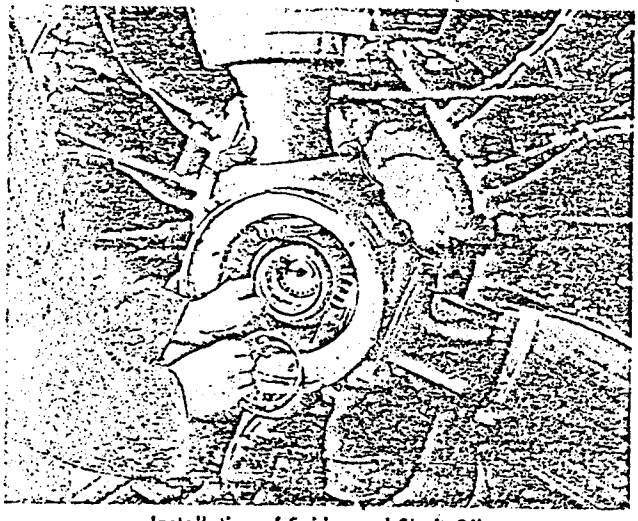

Installation of Spider and Shaft Oil Seal, Oil-Seal Washer, and Oil-Seal Expander Ring

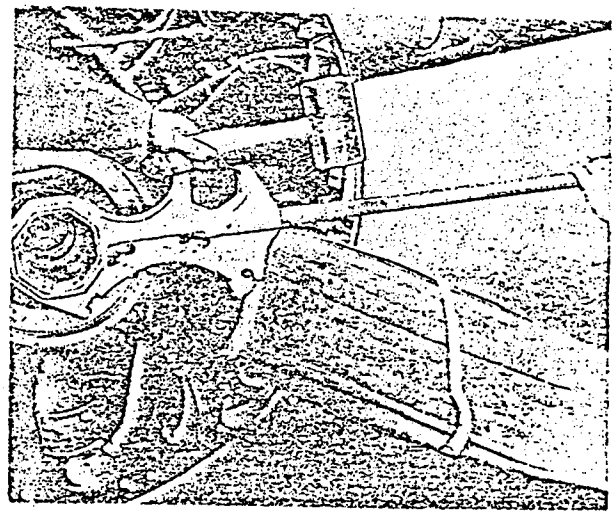

Tightening Retaining Nut With Composite Wrench, Adapter, and Handle

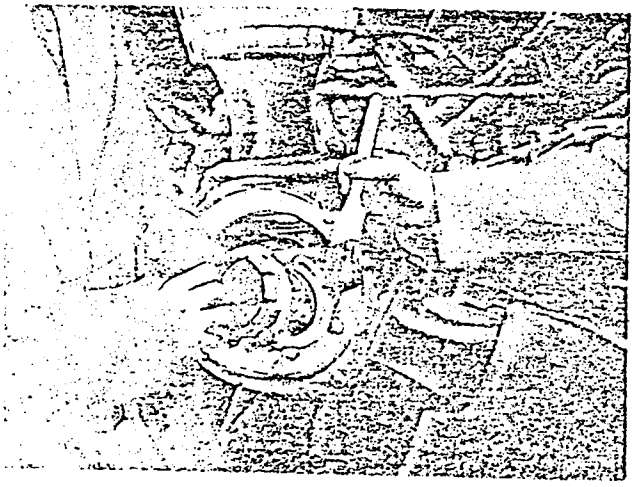

Applying Lubricant to Retaining Nut and Front Cone

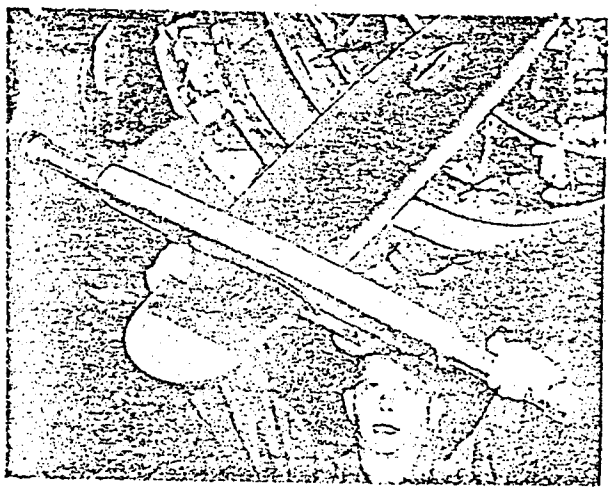

Adjusting Blade Angle Pitch

Figure 4-76. Propeller Hub and Blades Assembly

33,682

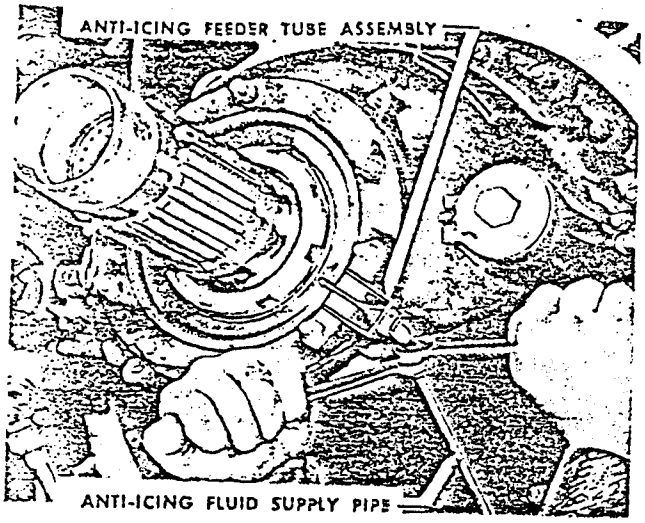

Installing anti-icing fluid supply pipe to feeder tube

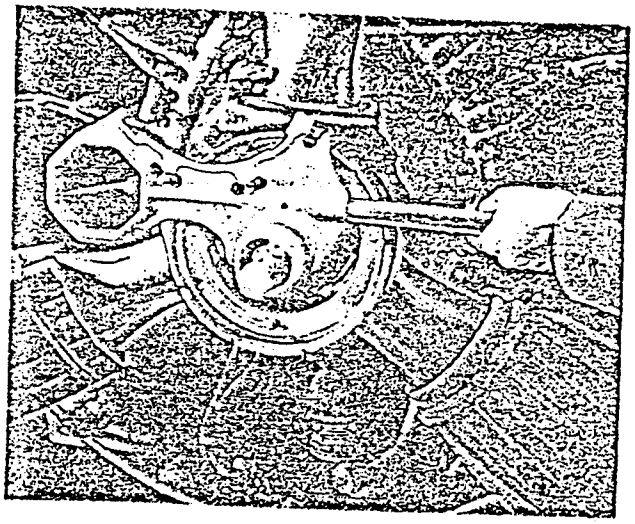

Tightening distributor valve using composite wrench

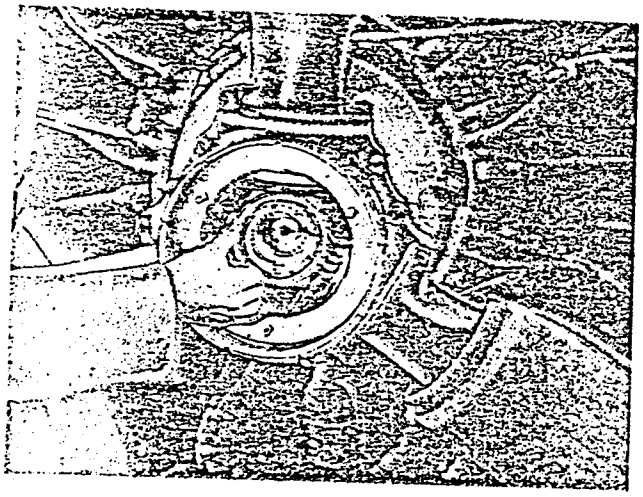

Installation of hub snap ring into the spider hub snap ring groove

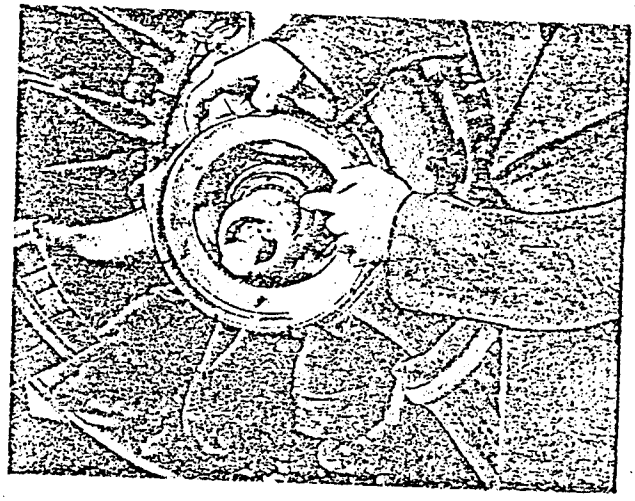

Retaining-nut lockwire (tail to follow direction of finger)

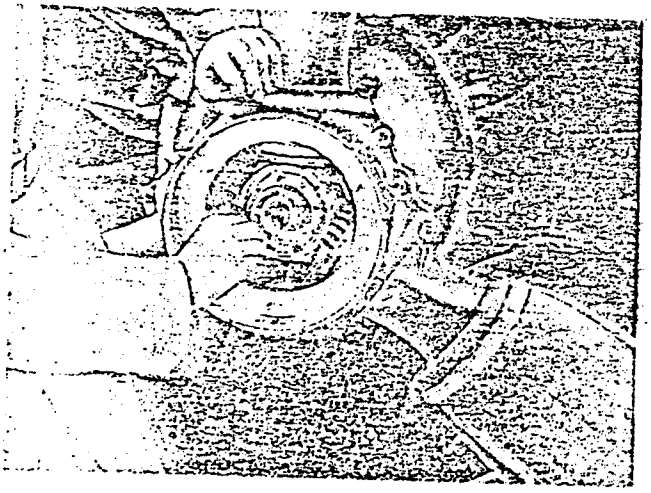

Installation of oil transfer plate and shaft oil seal gasket. (Engine furnished parts previously installed)

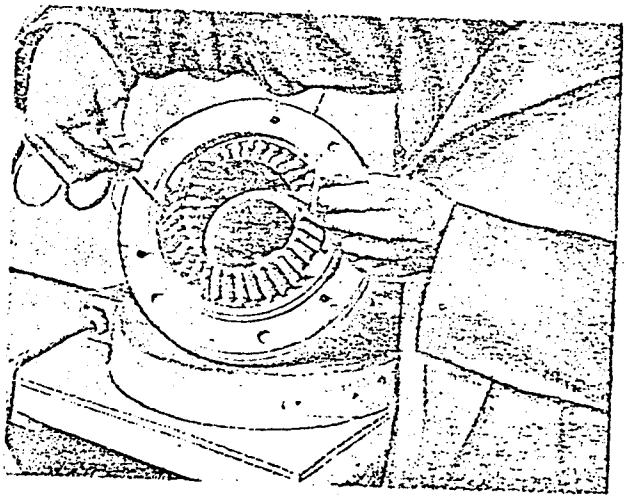

Lifting out stop rings

Figure 4-77 Propeller Valve Assembly and Anti-Icing Pipe Installation

53.683

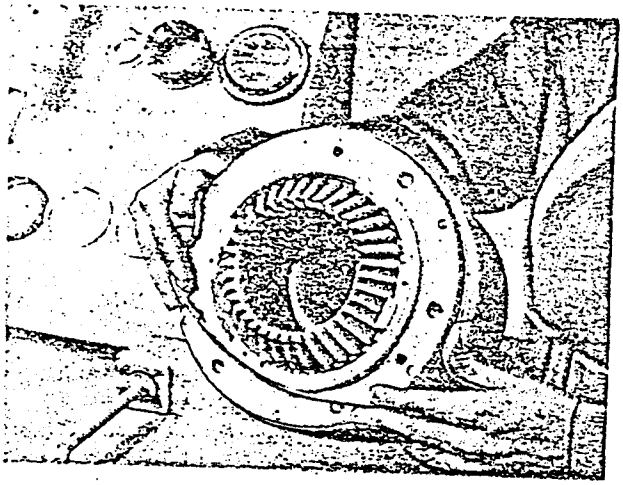

INSTALLATION OF DOME AND BARREL SEAL

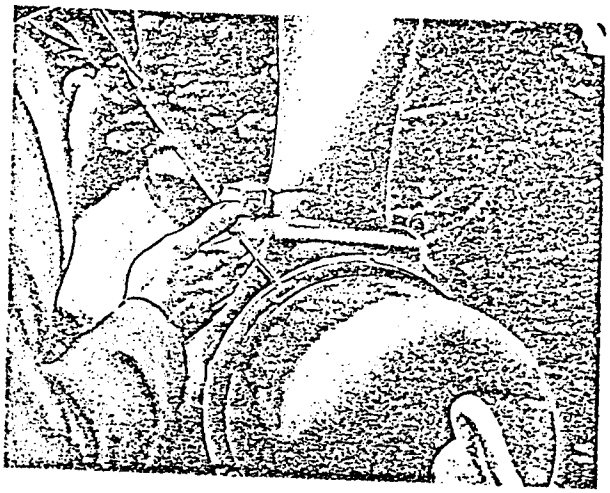

INSTALLATION OF DOME RETAINING NUT LOCKSCREW

INSTALLATION OF DOME LIFTING HANDLE IN BREATHER HOLE

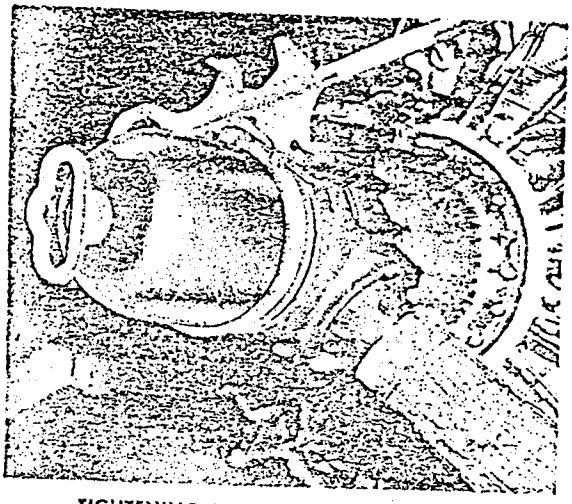

TIGHTENING DOME RETAINING NUT WITH COMPOSITE WRENCH, 3-FOOT HANDLE

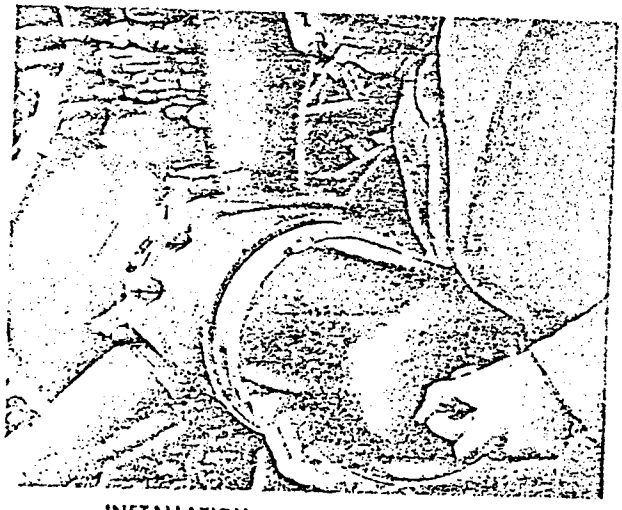

INSTALLATION -- STARTING PROPELLER DOME ASSEMBLY

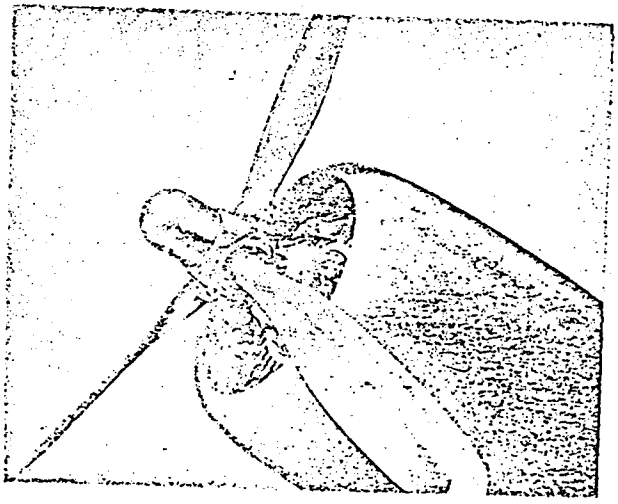

PROPELLER INSTALLED

Figure 4-78. Propeller Dome Assembly

33.684

j. Coat the shaft area of the cone seat liberally with corrosion-preventive compound, Specification MIL-C-11796A, Class 3.

Note

If the propeller is not to be installed for a period of more than 8 hours, a thread-protector cap must be installed on the engine propeller shafts at all times, and treated with rust preventive compound, or acid-free barrier material, Specification JAN-B-121, Grade A or Grade C.

k. Install the rear cone on the propeller shaft, pushing the cone against the corrosion-preventive compound. Rotate the cone about the shaft and against the thrust nut to displace as much of the compound as possible from the mating surfaces, completely filling the spaces between the rear cone and the thrust nut.

CAUTION

Be sure the rear split cone is free of oil and dirt.

l. Move the rear cone back until it contacts the propeller bearing nut. Apply a thin film of thread lubricant, Specification JAN-A-669, to the inner and outer shaft threads to prevent seizure of the propeller retaining nut or the distributor valve.

m. With the rear cone in position, wipe off the excess corrosion-preventive compound remaining on the cone and the exposed portions of the thrust nuts. The hub seat mating surfaces of the rear cone should be wiped clean and dry before installation of the propeller.

n. Place the thread-protector bushing on the propeller blade shaft.

o. Hoist and install the propeller hub and blade assembly, making certain that the blank spline in the propeller spider is in line with the master spline on the engine shaft, and that propeller blade clearance is provided for the installation workstand.

p. Remove the thread protector from the shaft.

q. Install the metal spider shaft-seal washer, a synthetic rubber spider-shaft seal (chevron seal), and a metal spider-shaft seal ring or "O" ring seal in the order named. The chevron seal must be installed with the open ends, or lips, facing away from the engine. Use a blunt instrument which will not harm the chevron seal, to aid in seating it properly.

r. Install the front cone, and the retaining nut.

CAUTION

When installing the front cone, make certain that the two halves of the cone match. To identify a matched pair, check that both carry the same serial number and that the numbers are 180 degrees apart (directly opposite each other).

s. Match the groove inside the front cone with the ledge at the base of the retaining nut.

t. Turn the blades into reverse low pitch to move the toothed portion of the blade segments down into the hub, providing necessary clearance for the installation of the propeller retaining nut and the attached front cone halves.

u. Start the propeller retaining nut and front cone onto the propeller shaft threads by hands. Torque the propeller retaining nut to 1000 foot-pounds, using the Sweeney tools listed in paragraph 4-245. After the retaining nut is at the required torque, note whether one locking slot in the retaining nut is in alignment with one hole in the propeller shaft. If not, continue the tightening process until one slot and hole are in alignment. Do not back off the retaining nut. Alignment will occur at each 5 degrees of rotation.

CAUTION

The propeller retaining nut should advance on the threads, without binding or catching. If it does not, check the retaining nut and the propeller shaft threads for burrs, nicks, cross-threading, etc.

v. An alternate method is to tighten the propeller retaining nut on the shaft, using heavy-duty installation wrench in conjunction with a bar six feet long. Apply a torque of 1000 foot-pounds. This can be obtained by applying a force of approximately 180 pounds at the end of the 6-foot bar. While maintaining this force, strike the bar close to the wrench with a hammer weighing not more than 2½ pounds.

w. In order to fully tighten the nut on the shaft while the tightening torque is being applied, strike the bar close to the wrench with a hammer weighing about 2½ pounds. Check if one locking slot in the retaining nut is in alignment with one hole in the propeller shaft. If not, continue the tightening operation until one slot and hole are in alignment. Do NOT back off the retaining nut. Alignment will occur at each 5 degrees of rotation.

x. Compress the hub snap ring, and install it in the spiderhub snap-ring groove.

4-252. INSTALLATION OF DISTRIBUTOR VALVE.

a. Install the distributor valve propeller-shaft gasket inside the propeller shaft. Make certain that the engine shipping plug is removed from the shaft.

b. Check the valve housing oil transfer plate on the base of the distributor valve to be sure that it is the solid-center type, and that the copper gasket is included between the oil transfer plate and the housing.

c. Apply a thin film of thread lubricant, Specification JAN-A-669, or clean engine oil, to the threads on the base of the distributor valve. Screw the valve into the propeller shaft by hand.

CAUTION

The valve must advance into the propeller shaft smoothly and easily. If binding is noticed, remove the valve and check the threads of the shaft and housing for burrs, etc. If binding persists, back off the propeller retaining nut two or three turns, and then screw the valve into the shaft This relieves the compressive effect.

d. Tighten the distributor valve into the propeller shaft to a torque of 100 foot-pounds, using a 1-foot bar in conjunction with a composite wrench. While torque is being applied, strike the bar lightly near the wrench with a hammer weighing not more than 2½ pounds. Repeat this tightening operation until one locking slot on the valve housing is in alignment with the same locking hole in the propeller shaft. Whenever possible, use the special heavy-duty valve wrench to minimize the danger of collapsing the housing.

CAUTION

Do not back off the valve housing to obtain slot and hole alignment. If this alignment cannot be obtained without exceeding the specific torque, remove the distributor valve and reinstall it, either by the use of a new oil transfer plate and shaft gasket, or by lapping the first gasket to reduce its thickness.

e. Insert the propeller retaining-nut lockwire in the lockwire groove of the retaining nut, and make certain that the extended portion of the wire fits through the propeller retaining nut and the propeller shaft, and locks into a slot in the valve housing.

4-253. BLADE-ANGLE LIMIT ADJUSTMENT.

a. Check the high- and low-pitch stop rings in the base of the fixed cam to make certain the dome-operating range is correctly set.

b. Reset the stop rings by first lifting out the inboard stop ring (the high-pitch stop ring marked SET TO HIGH PITCH on one lug and ASSEMBLE THIS STOP LAST on the other lug). Lift out the lower stop ring (the low-pitch ring marked SET TO LOW PITCH on one lug and ASSEMBLE THIS STOP FIRST on the other lug).

Note

These rings can be removed by inserting two 10-24 screws in the tapped holes which are incorporated in the stop lug portion of each ring.

c. Install the low-pitch ring to the desired low-angle limit by inserting it in the stop-ring flange so that the arrow stamped on the stop ring coincides with the desired angle mark stamped on the fixed cam flange. Install the high-pitch stop ring in an identical manner. The stop lug on the rotating cam gear, marked SET WITHIN GRADUATIONS, must lie within the graduated arc of the stop-ring flange on the base of the fixed cam.

d. Install the required number of preload shims over the fixed cam locating dowels in the hub assembly.

Note

The preload markings on the hub and dome determine the thickness of shimming. Thus, if the hub is marked PD422 and the dome PD433 (PD means preload depth), the hub must be shimmed up according to the amount of the difference (PD433 minus PD422 or 0.011 inch). As the shims are in multiples of 0.005 inch, the nearest multiple is 0.010 inch. Hub preload depth plus the shim thickness must be within ±0.002-inch dome preload depth.

e. Move the rotating cam until the cam stop lugs contact the positive high-pitch stop on the high-pitch stop ring. Turn the blades in the hub assembly stop pins.

CAUTION

When installing the dome assembly in the hub assembly, it is absolutely essential that the movable cam gear in the dome meshes properly with the blade gear segments. By setting the dome assembly and the blade assemblies at the same feathering angle, the mating teeth will mesh properly. Make certain that the feathering angle setting is identical in both the dome and the hub and blade assemblies.

f. Using the blade turning lever, twist the blades to full-feathered position (88-degree angles). Check all external screws, nuts, etc for proper safetying.

g. Check each blade for free radial movement. Free radial movement in any one blade in excess of 0.5 degree will be considered basis for removal of the propeller.

4-254. INSTALLATION OF DOME ASSEMBLY.

a. Install the dome lifting handle in the dome breather hole.

b. The dome assembly is initially installed in the hub assembly with the correct number of preload shims in place, but without the dome and barrel seal. Lift the dome assembly into position and install it over the fixed cam-locating dowels in the hub assembly. Make certain that the arrow etched on the base of the fixed cam coincides at installation with the arrow stamped on the barrel-dome shelf of the outboard barrel half. When installing the dome assembly, make certain that the oil-seal rings on the valve assembly are staggered, and that they enter properly into the piston oil-seal ring sleeve.

c. Turn the dome counterclockwise until the fixed cam-locating dowels in the barrel-dome shelf enter the dowel holes in the fixed cam. Start the dome retaining nut into the hub assembly by handturning the dome retaining nut; then attach the composite wrench and insert a wrench bar. Remove the dome lifting handle. With the dome-to-barrel seal installed, tighten the dome retaining nut, using a torque sufficient to seat the dome on the barrel shelf, but do not exceed the maximum allowable 720 foot-pounds. Obtain alignment of the dome retaining nut lockscrew with one of the crescent slots in the outboard edge of the barrel.

CAUTION

Be sure to install the seal with the tapered end facing away from the dome retaining nut.

Note

With the dome asssembly properly seated in the barrel, the front face of the dome retaining nut will be approximately flush with the front edge of the outboard barrel half. Tightening of the dome retaining nut, in addition to fastening the dome unit to the hub, serves to apply the preloading force to the gears and to compress the dome and barrel seal. Failure to tighten the dome unit securely in the hub will result in elongation or failure of the dome shelf retaining screws, and oil leakage around the dome retaining nut.

d. Install the dome retaining nut lockscrew in the dome retaining nut, and safety with a $^{1}/_{16}$-inch cotter pin or lockwire. If lockwire is used, make certain that it is installed in line with the outboard-half edge.

e. Check the high-pitch blade angle either by the index lines on the blades and graduations on the barrel blade bore, or by a bubble protractor at the reference station; then, using suitable blade turning levers, shift the propeller blades into full low position and check the low-blade angle. These angles should be the same as the high- and low-pitch settings of the stop rings, and this check will ensure that the correct relationship between the blade segments and the cam gear has been obtained.

f. Install the dome breather hole seal in the dome breather hole. This seal is inserted with the tapered portion facing into the dome. Insert the dome breather hole washer over the seal.

g. Install the dome breather hole nut and tighten it into place, using a torque of 30 to 50 foot-pounds. Continue this tightening operation until one of the holes in the nut lines up with a slot in the dome shelf.

h. Snap the dome breather hole nut lockwire into the groove on the inside of the nut in such a way that the extended portion of the wire rests in the dome shelf groove.

CAUTION

The lockwire musr be installed so that the secured end will be facing in the same direction as the rotation of the propeller blade.

i. Check the external cotter pin or lockwire.

4-255. PROPELLER BLADE REPAIRS. *(See figure 4-79.)* Minor propeller blade repairs can be made providing the instructions in the following paragraphs are closely followed.

4-256. SMALL NICKS OR DENTS. Remove small nicks or dents in the leading edges, trailing edges, or tips, by reworking the blade locally with a curved or riffle-type file. In urgent cases, if the nicks are not too large, they can be removed while the propeller is installed without rebalancing. However, more desirable results are obtained if the propeller is rebalanced. When a nick is removed from a blade with the propeller on the airplane, balance can be attempted by weighing or calculating the weight of the removed metal and adding weight to provide an equal moment on the same side of the hub, or removing weight to provide an equal moment on the opposite side of the hub. Weight may be added by removing the plugs within the dowel bolts on the hub and inserting lead wool. Be sure to remove the sharp base of the nicks, as these act as stress concentration points. Polish the reworked surface with a fine emery or crocus cloth.

Note

If balancing is not accomplished, the propeller MUST be removed and forwarded to an AF Repair Depot.

4-257. SURFACE CUTS AND SCRATCHES. Rework surface cuts and scratches more than 10 inches distant from the propeller tip so as to form saucer-

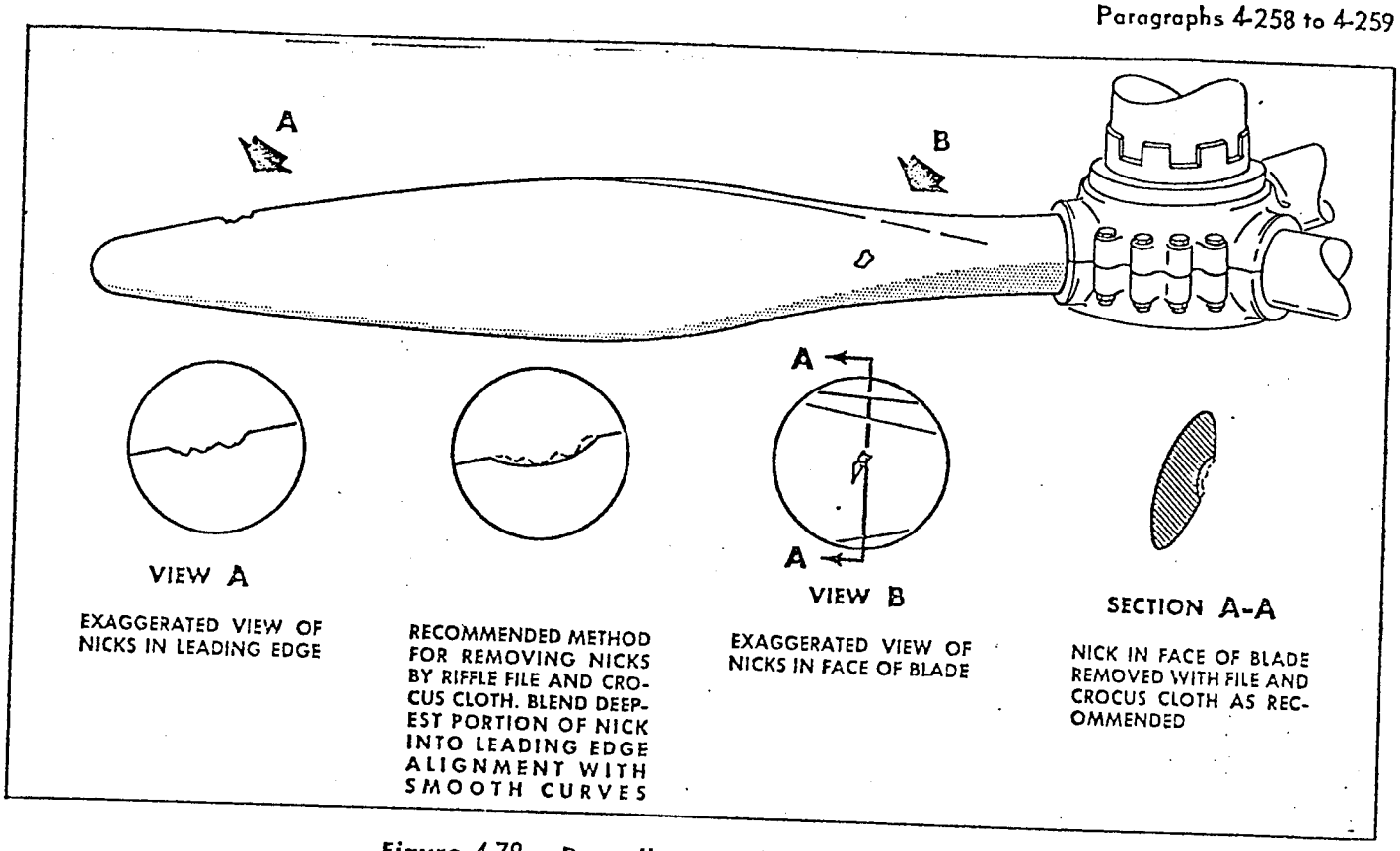

Figure 4-79. Propeller Repair—Minor Damage

33,685

shaped depressions. These cuts or scratches must not exceed 1 inch in length, 3/8 inch in width, and 1/8 inch in depth. Surface cuts and scratches less than 10 inches from the propeller tip may be similarly reworked, but the depressions must not exceed 3/4 inch in length, 9/32 inch in width, and 3/32 inch in depth. More than one of these defects per blade is permitted, providing they do not form a continuous line and are not closer than 1 inch to each other in a transverse direction. In urgent cases, repair can be made while the propeller is on the airplane; however, balance the propeller as described in paragraph 4-256.

4-258. ETCHING. Perform the etching operation as follows.

a. Prepare the etching solution by adding to the required quantity of water as much commercial caustic soda as the water will dissolve at room temperature. Glass or earthenware containers must be used, and the quantity of solution will depend upon the amount of etching to be done.

b. With No. 00 sandpaper, clean and smooth the area being reworked. With a small swab or stick, apply a small quantity of the caustic solution to the area.

c. When the area is darkened, wipe it thoroughly with a clean cloth dampened with clean water. Too much water might remove the solution from a defect and thereby spoil the etching.

Note

A crack or other defect extending into the metal will appear as a mark on the surface and, with the aid of a magnifying glass, small bubbles from the solution in the crack may be seen forming in the indentation.

d. If necessary, apply the caustic solution several times to determine that all the shallow cracks have been removed. Immediately upon completion of the final check, remove all traces of the caustic solution with nitric acid solution, which in turn must be thoroughly rinsed off with clean water. After all the etching has been completed, polish the surface with fine emery or crocus cloth to remove all traces of the etch.

4-259. TEST AFTER INSTALLATION (FEATHERING AND UNFEATHERING TESTS).

a. Check the correct blade angles after installation of the propeller.

b. Start and warm up the engine for 15-minute run.

c. Shut the engine off.

d. Remove the propeller dome assembly and the distributor valve.

Note

Retorque of propeller retaining nut is not required when power tools (Sweeney) are used for initial installation. When the alternate method is used, the retaining nut will be retorqued.

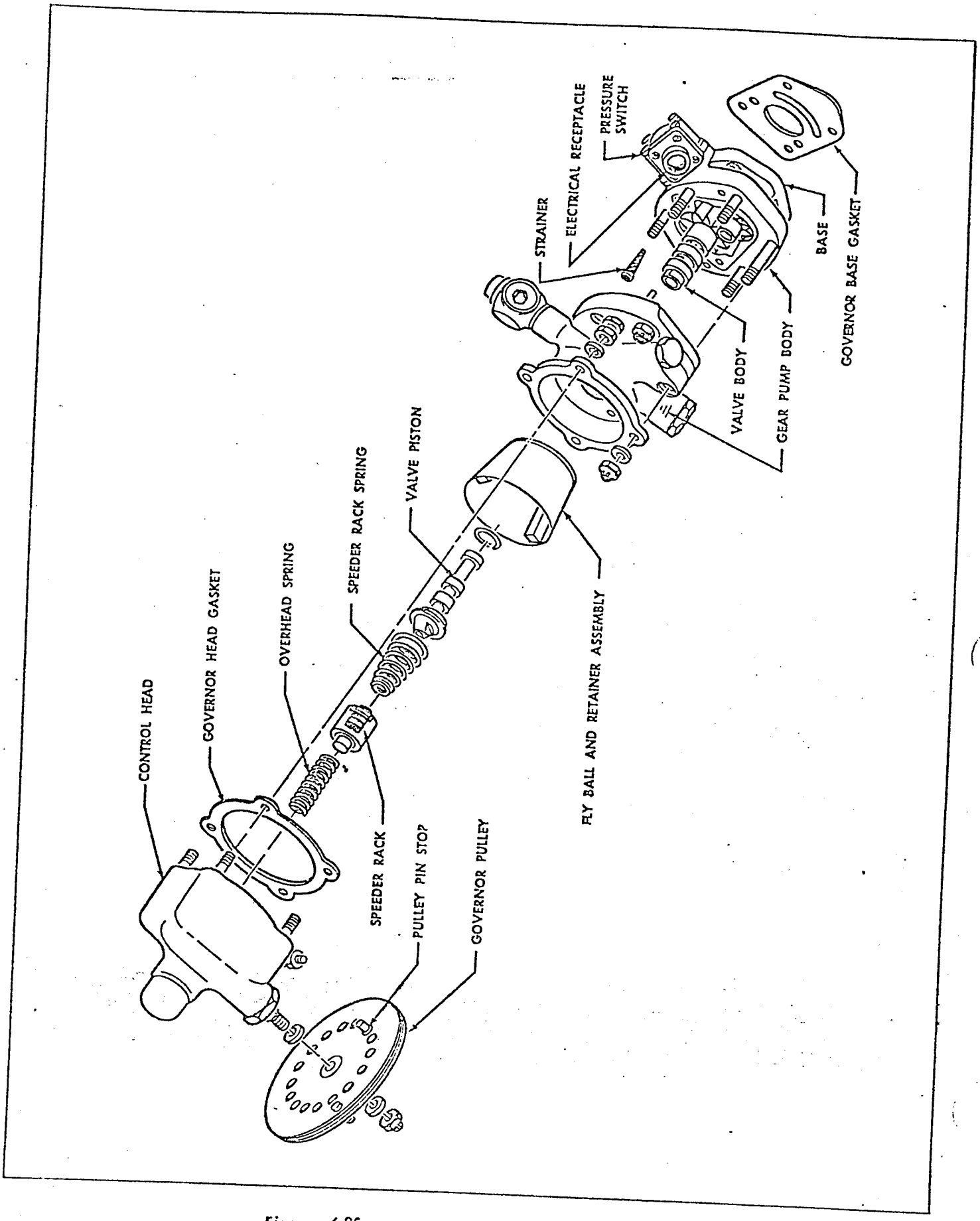

Figure 4-80. Propeller Governor Disassembled

33.686

e. Torque the propeller retaining nut.

f. Install the distributor valve and the dome assembly.

g. After engine warmup, set the propeller control to FULL INCREASE RPM and advance the throttle to 1700 rpm. Move the propeller to DECREASE RPM, then to FULL INCREASE RPM (minimum governing speed is 1200 rpm). Note that the rpm returns to 1700. Depress the propeller feathering button and check for 200 rpm drop, then pull out the feathering button (check the ammeter for change during feathering).

h. After engine warmup, make a check of the feathering and unfeathering controls through a complete cycle. This can be accomplished with the engine stopped and the engine sump drain plug removed so that the oil pumped from the propeller will not collect in the engine crankcase. Drain the oil. Upon completion of the feathering and unfeathering cycle, install the engine sump drain plug and service the oil system.

CAUTION

To avoid overloading the engine sump, do not repeat the feathering and unfeathering test until the engine has been run for at least 2 minutes at approximately 1000 rpm.

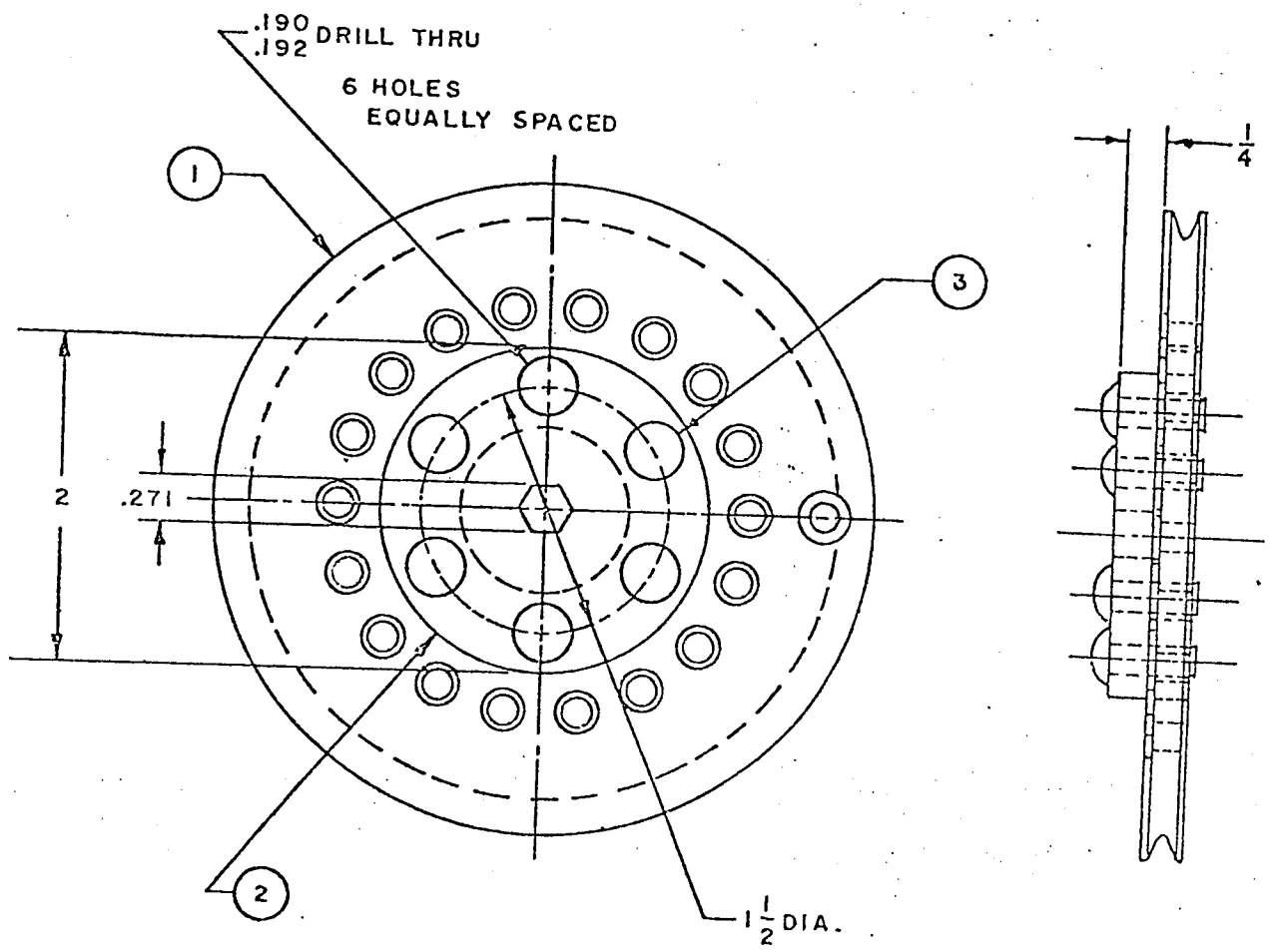

Figure 4-81. Pulley, Propeller Governor Control, L.H. Part No 62B44160

i. The feathering operation, with the engine running, has several important advantages not attainable when feathering is carried out with the engine stationary. These advantages are outlined as follows:

(1) It is not necessary to drain the engine sump after each feathering cycle in order to avoid loading the engine with oil, since the engine scavenge pump returns the excess oil to the container.

(2) The oil is heated, and the propeller feathers and unfeathers faster and on a lower pump pressure, thereby reducing the load on the electrical system.

(3) The heated oil and the rotating engine parts allow a lower engine back pressure during feathering and unfeathering. (This back pressure is caused by the displacement of approximately 3 quarts of propeller oil into the engine lubricating system when the propeller is feathered or unfeathered.)

(4) The feathering test is accomplished with oil of relatively low viscosity which approaches more closely the conditions under which the propeller would be feathered in flight.

4-260. PROPELLER GOVERNOR. *(See figure 4-72.)*

Pulley, propeller governor control L.H. P/N 2189680. (See figure 4-81.) Pulley assembly can be reworked if loose or sheared rivets are found, providing the following instructions are closely followed:

a. Remove L.H. propeller governor control pulley, P/N 2189680.

b. Remove the six rivets in pulley and adapter.

c. Line drill the six rivet holes in pulley and adapter to size: 0.190
0.192

d. Break sharp edges on drilled holes approximately 0.010R.

e. Install six each rivets, P/N MS20470AD-12, S/N 5320-117-6856, in pulley and adapter.

f. Re-identify reworked pulley as P/N 62B44160.

g. Re-install propeller governor control pulley in accordance with existing instructions.

4-261. The Hamilton Standard Type 4G8 double-capacity governor incorporates a pump which meters oil by flyweight action through an automatic distributor valve to a cylinder and piston in the propeller dome. The pump is mounted on the governor pad of the front nose section of the engine. A cam converts piston travel into the propeller blade-angle change, which in turn controls the engine rpm within the governing range of 1200 rpm minimum to 2700 rpm maximum. High-pressure oil flows through the governor when the feathering system is in operation. On airplanes having *narrow* propeller blades (6353A-18), single- or double-capacity governors can be used. On airplanes having *wide* propeller blades (6477A-0), double-capacity governors must be used. Both the single- and the double-capacity governors operate in essentially the same way, with the double-capacity governor capable of supplying a greater supply of oil at a higher pressure to the propeller.

4-262. REMOVAL OF PROPELLER GOVERNOR.

a. Set the propeller rpm control lever, located in the flight compartment, to 2100 rpm.

b. Note the angular position of the governor pulley to assure installation in the same position. Slacken the control cable and remove the pulley.

c. Disconnect the electrical conduit.

d. Disconnect the high-pressure oil pipe.

e. Remove the four hold-down nuts and the governor.

Note

The head assembly can be removed without removing the governor from the aircraft.

4-263. ADJUSTMENT OF PROPELLER GOVERNOR. The centrifugal force of the flyweights balances the compression of the speeder spring, which seats on a screw plug in the speeder rack. To change propeller speed, the control shaft gear moves the speeder rack and changes spring compression. The propeller speed changes correspondingly until the flyweights balance the spring compression in the new position of the speeder rack. Another spring above the speeder rack prevents overspeeding when a leak occurs in the hydraulic passages. Minimum rpm is set by screwing the seat plug into or out of the speeder rack.

a. Remove the speeder rack from the governor head assembly and insert Allen wrenches into both the seat plug and the lock plug. Unscrew approximately one-quarter turn without touching the speeder rack. This turns the lock plug only.

Note

The speed is changed approximately 200 rpm for each 360-degree rotation (one complete revolution) of the plug. Counterclockwise rotation increases rpm.

b. Lock without touching the speeder rack.

c. Insert the speeder rack in the governor head assembly with the missing tooth matching the wide tooth on the control-shaft gear.

4-264. INSTALLATION OF PROPELLER GOVERNOR. If the propeller governor being re-installed has not been adjusted, use the same shaft index-pulley hexagon hole relationship as before. If a new or overhauled governor is to be installed, the following procedure will apply.

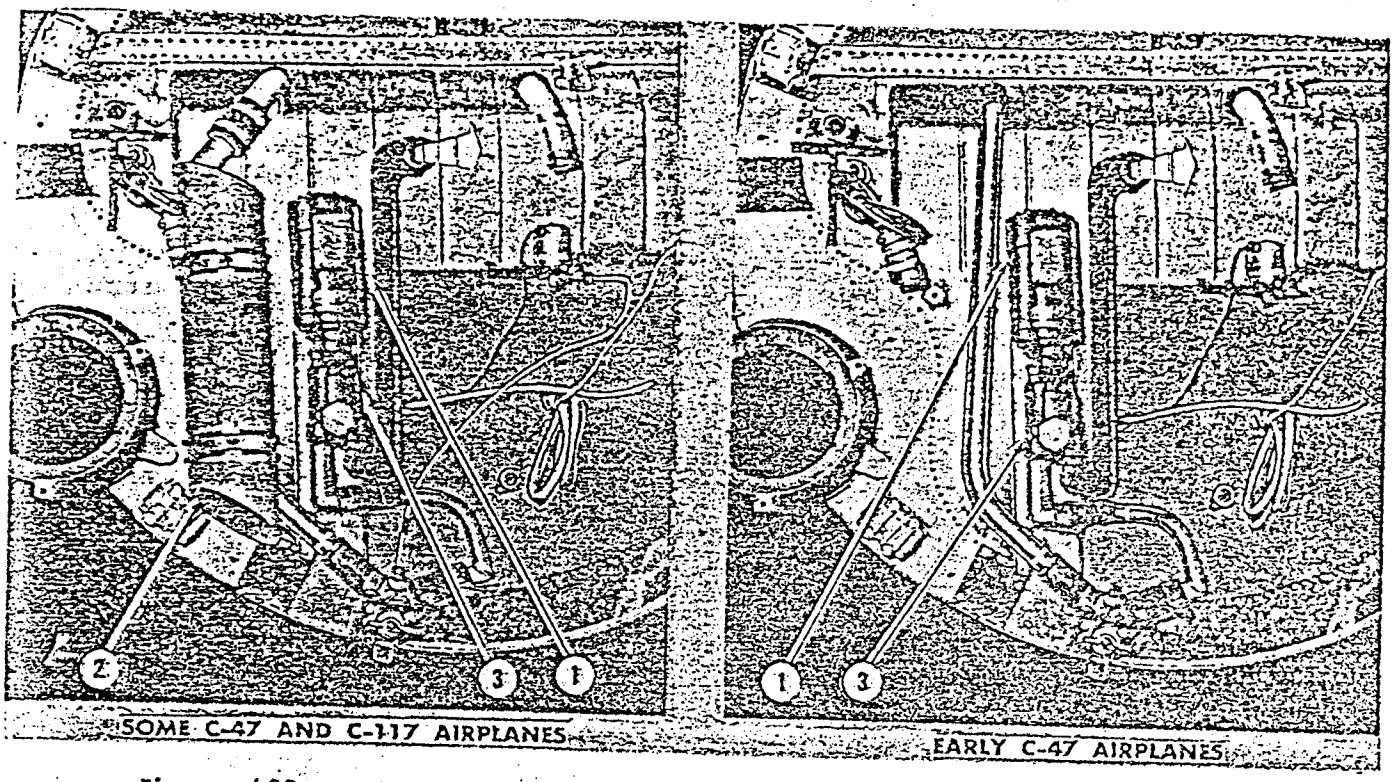

Figure 4-82. Auxiliary Hydraulic Feathering Pump and Electric Motor Assembly

33,687

a. Make certain that the screw plugs in the governor base are installed in the holes marked B-B.

b. Mount the governor on the engine pad. Install washers and stainless steel self-locking nuts fingertight on the mounting studs. Remove the governor head from the body, and check the drive gear shaft for backlash and freedom of movement while tightening the governor securing nuts. Tighten the securing nuts evenly to a torque of approximately 150 to 170 inch-pounds. Excessive tightness will displace the gasket material around the mounting studs and warp the governor base.

Note

Again torque the mounting nuts after 15 minutes of engine operation, as compression of the seal may allow the nuts to loosen.

c. Connect the electrical conduit and the feathering oil pipe.

d. Turn the governor control shaft to full clockwise position. Install the pulley on the shaft in such a manner that the pulley cable clamp will be included in the pulley arc which is covered by the cable throughout the entire range of the pulley rotation.

4-265. SETTING PROPELLER RPM CONTROLS.

a. To obtain a trial high-rpm setting, hold the pulley in full clockwise position and install the high-rpm pulley stop screw approximately 100 degrees from the end of the high-rpm adjustment screw on the governor head. (There are 18 holes for possible location of the pulley stop screw around the pulley. Thus, there is a 20-degree spacing between the hole centers.)

b. Rig the cable and the controls so that the flight compartment control can cover the entire range of pulley rotation.

c. With the engine running, check the high-rpm setting by placing the flight compartment control in full INCREASE RPM position and opening the throttle slowly to, or very near to, takeoff manifold pressure. Note the rpm at which the governing takes place.

d. To increase the maximum rpm setting, move the pulley stop screw on the hole in the opposite direction from that in which the pulley turns when increasing rpm.

e. To obtain small changes in maximum rpm setting, turn the stop screw on the governor head clockwise to decrease rpm, or counterclockwise to increase rpm.

CAUTION

If the engine fails to develop takeoff rpm at takeoff manifold pressure while the propeller control is in full INCREASE RPM position, check if the engine rpm drops off slightly when the manifold pressure is slightly reduced. If the rpm does not change, the governor is controlling the propeller, but is not set for takeoff rpm, due to improper adjust-

ment of the high-rpm stop on the governor head or improper rigging of the controls. If the rpm drops when the manifold pressure is slightly reduced, the governor is in the underspeed condition, but the blades are against the low-pitch stops and cannot go to a lower angle. UNDER THESE CONDITIONS, DO NOT ATTEMPT TO INCREASE THE RPM BY ADJUSTING THE GOVERNOR MAXIMUM RPM STOP, AS THIS WILL NOT INCREASE RPM ON THE GROUND AND CAN CAUSE DANGEROUS OVERSPEEDING IN FLIGHT. Check the engine for any condition causing the loss of power and check the minimum blade angle.

f. Adjust the propeller control lever in the flight compartment so that there is ⅛-inch clearance between the lever and the end of the slot when the lever is in the full forward position.

4-266. PROPELLER FEATHERING PUMP. *(See figure 4-82.)* A propeller feathering pump assembly is installed on the forward side of each nacelle firewall, and is driven by a 24-volt d-c motor. The pump consists of a pair of closely meshed steel gears contained within a housing mounted on the end of an electric motor. A relief valve is incorporated within the pump. The valve is controlled by a spring with the tension varied by means of an adjusting nut located on top of the pump. The electric drive motor is controlled by the propeller feathering control switch button mounted on the pilots' center electrical panel.

4-267. REMOVAL OF PROPELLER FEATHERING PUMP.

a. Remove the engine accessory cowling.

b. Drain the oil system at the wye drain fitting located forward of the firewall at the lower center area of the nacelle.

c. Disconnect the oil system piping from the pump and drain the oil into a container.

d. Disconnect the electrical cable and conduit from the motor terminal.

e. Cut the lockwire and remove the bolts, two mounting screws, and the pump.

4-268. INSTALLATION OF PROPELLER FEATHERING PUMP.

Note

Two men are required to install the pump. Make certain that the ⅛-inch pressure restriction fitting is installed in the propeller feathering pump; also check to be sure that the 10-24 fillister head screw has been removed from the pump mounting flange.

a. Position the propeller feathering pump on the nacelle firewall, secure it with the mounting screws and bolts, and safety with lockwire.

b. Connect the electrical cable to the motor terminal and secure the conduit.

c. Check for short circuits between the terminal and the terminal housing before installing the terminal box cover.

d. Connect the oil system piping to the pump.

e. Close the wye-drain fitting and fill the main engine oil tank with clean oil.

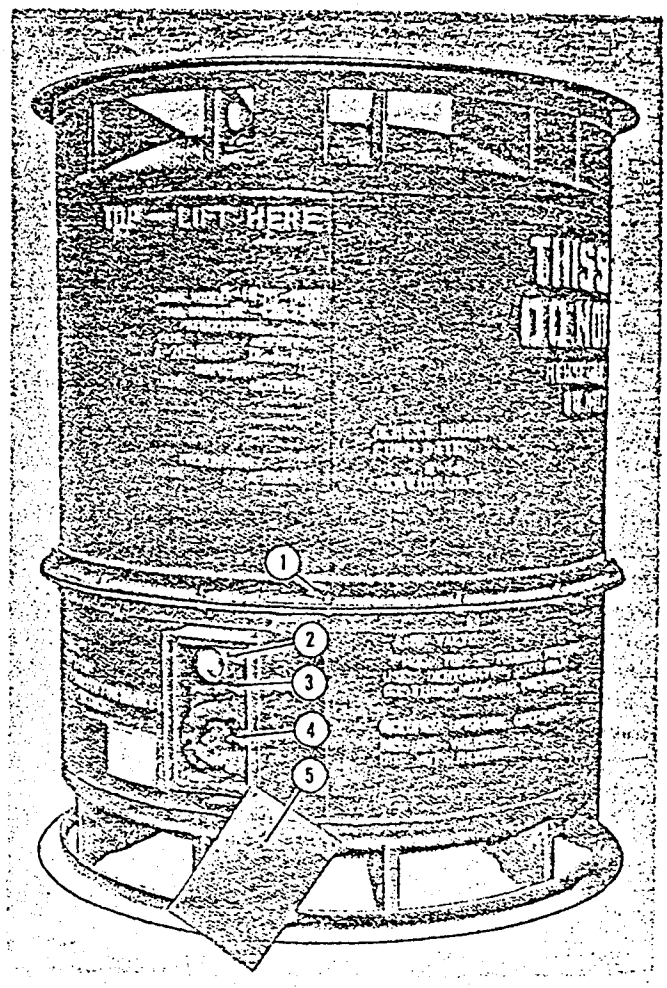

33.590

Figure 4-83. Engine Shipping Container

Key to Figure 4-83

Item	*Nomenclature*
1.	Bolt – Securing Upper and Lower Container Halves
2.	AF Form No. 829 Case
3.	Moisture Indicator (silica gel plug)
4.	Air Valve
5.	Accessory Case Door

4-269. REMOVAL AND INSTALLATION OF PROPELLER FEATHERING SWITCH, PROPELLER FEATHERING RELAY, AND PROPELLER FEATHERING PRESSURE CUTOUT SWITCH. For the removal and installation of the propeller feathering switch, propeller feathering relay, and propeller feathering pressure cutout switch, see Sections VII and XII.

4-270. FUNCTIONAL TEST OF PROPELLER FEATHERING SYSTEM. Perform the following functional test only after an engine run of sufficient duration to heat the oil system to normal operating temperature.

Note

The engine sump drain plug must be removed to prevent oil from the propeller collecting in the engine sump during the feathering operation cycle.

a. Immediately after stopping the engine, position a waste oil container beneath the engine sump drain and remove the drain plug.

b. Connect an external power source to the airplane with the master battery switch OFF.

c. Close the feathering control switch (the holding coil will hold the switch closed).

d. When the propeller reaches the fully feathered position, the holding coil will release the switch and the feathering pump will stop.

e. To unfeather the propeller, hold the feathering switch closed until the propeller reaches a normal cruise pitch.

f. Remove the external power and install the engine sump drain plug.

4-271. POWER PLANT BUILDUP. *(See figures 4-99 and 4-101.)* The power plant buildup includes all of the necessary steps from the removal of the engine from the shipping container to the installation of the accessories and equipment, which completes the demounted power plant portion for installation on the airplane.

4-272. ENGINE SHIPPING CONTAINER. *(See figure 4-83.)* R-1830 engines are stored in a pressurized 2-piece metal container. Hoisting lugs are provided on the top of the container. Pertinent information and instructions are stenciled on the container. An accessory case, located on the lower half of the container, houses the engine Form AF 829, air valve, and moisture indicator plug.

4-273. PREPARATION FOR REMOVAL OF ENGINE FROM CONTAINER. *(See figure 4-83.)*

a. Remove all except one of the nuts securing the metal door to the accessory case and allow the door to swing down.

b. Remove the cap and the engine Form AF 829 from the tube at the upper end of the case; replace the tube cap.

Note

Form AF 829 must accompany the engine at all times.

c. Check the silica gel crystals in the humidity plug for discoloration.

Note

The color of silica gel crystals should be blue; however, the intrusion of moisture will cause the crystals to fade. Excessive moisture will cause the crystals to turn pink. If the crystals have turned pink, the engine is not acceptable for service.

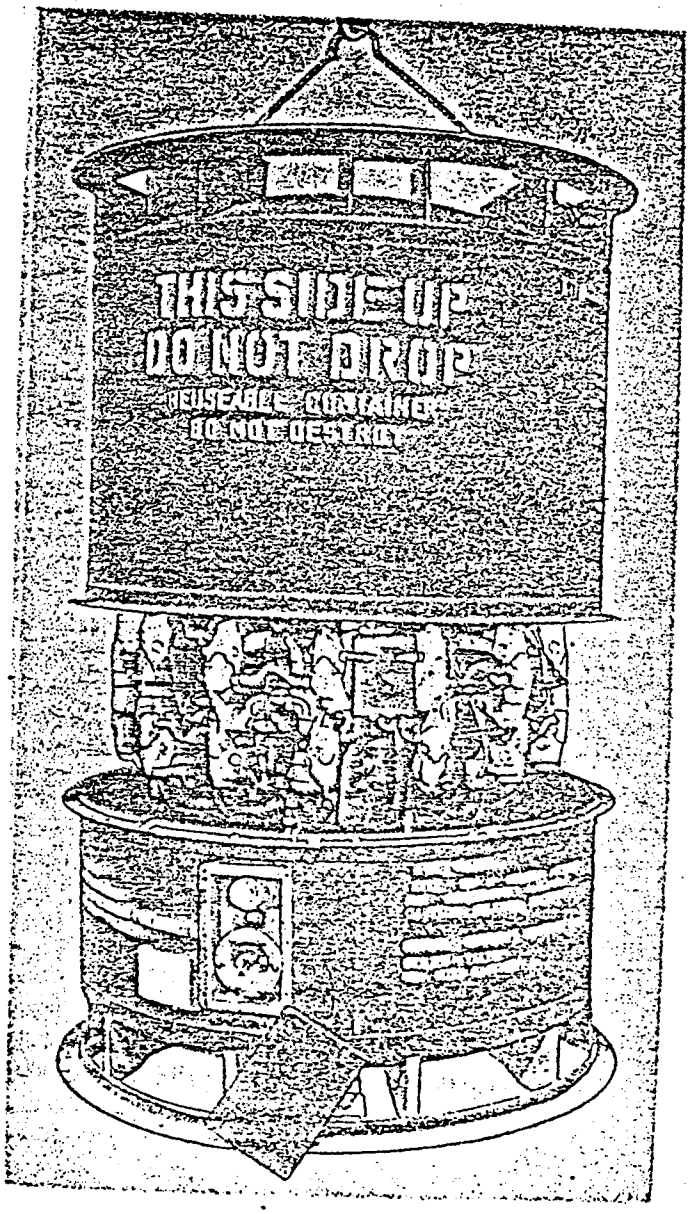

33.591

Figure 4-84. Removing or Replacing Upper Half of Shipping Container

d. Remove the air valve cap and loosen the valve core slightly until the air in the container begins to escape.

WARNING

Do not completely remove the air valve core.

e. Allow all the air to escape from the container.

WARNING

Do not loosen the nuts securing the upper and lower halves of the container until all the air pressure has been released.

4-274. REMOVAL OF ENGINE FROM CONTAINER.
(See figures 4-84 through 4-86.)

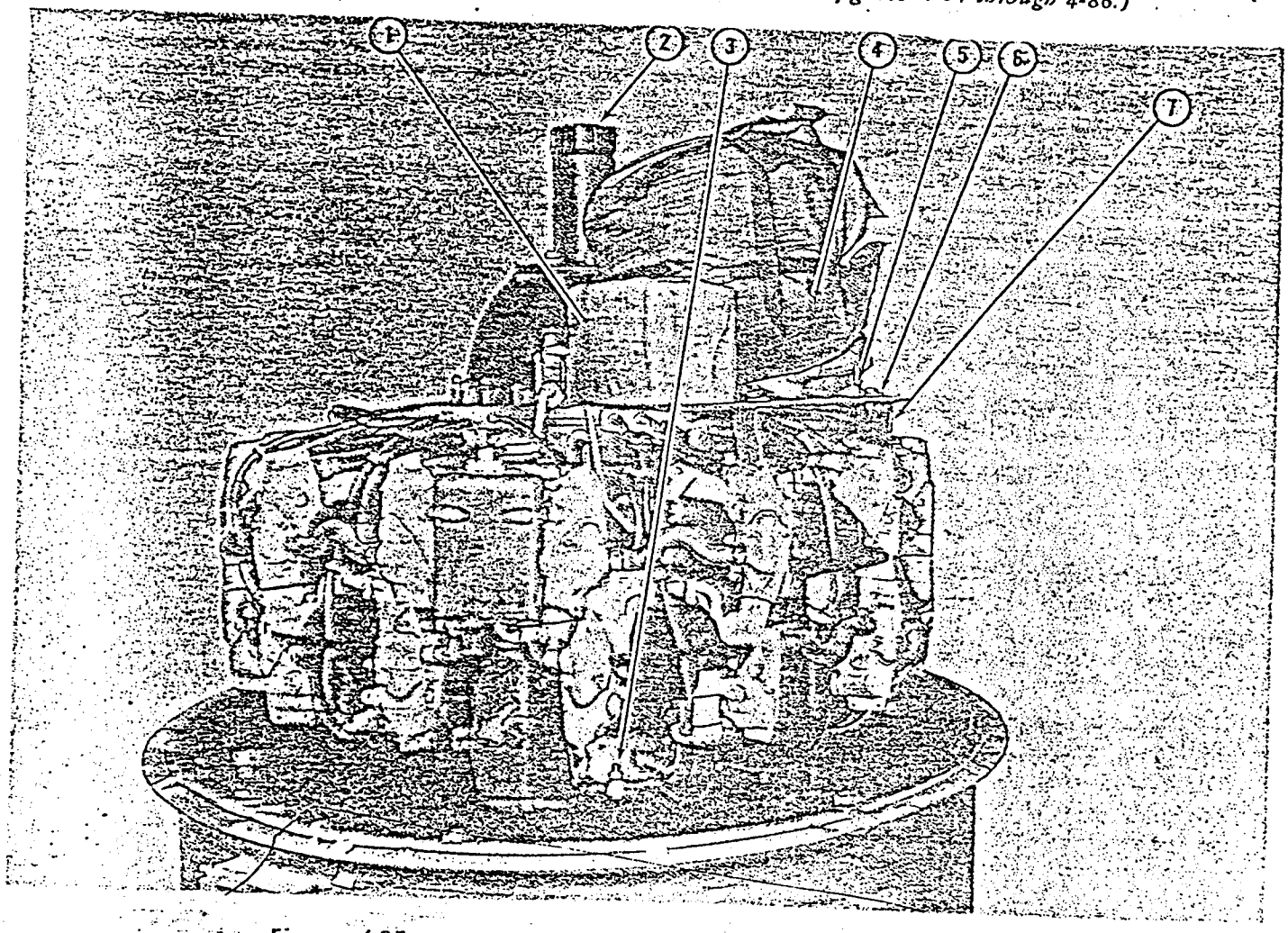

Figure 4-85. Engine and Components in Shipping Container

33,592

Key to Figure 4-85

Item	Nomenclature	Item	Nomenclature
1.	Spark Plugs	4.	Carburetor
2.	Propeller Shaft Protector Cap	5.	Carburetor-to-Engine Attach Bolts
3.	Engine Mount Bracket-to-Container Attach Bolt (typical)	6.	Carburetor Shipping Bracket
		7.	Carburetor and Spark Plug Shipping Plate Assembly

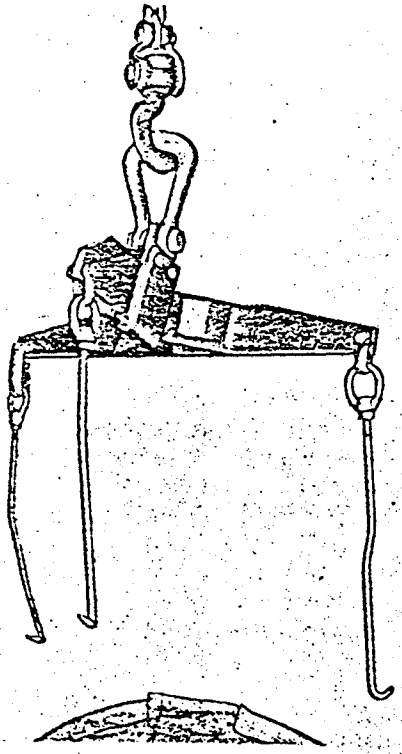

THREE-PRONG HOISTING SLING

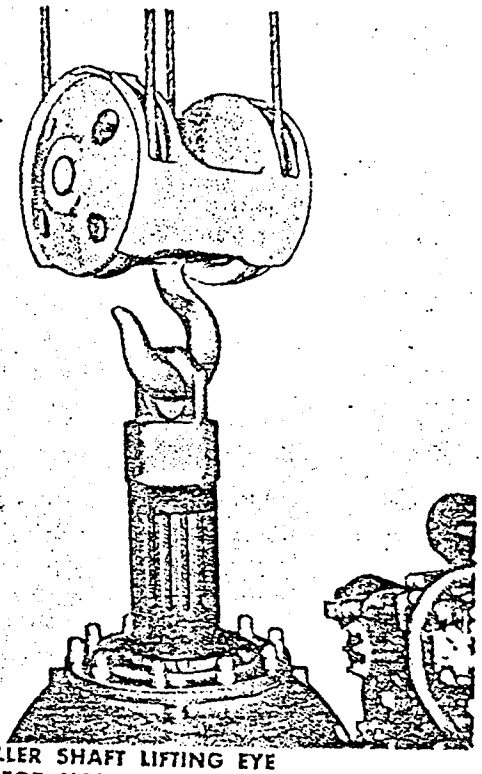

PROPELLER SHAFT LIFTING EYE
(USED FOR HOISTING AND TILTING ENGINE)

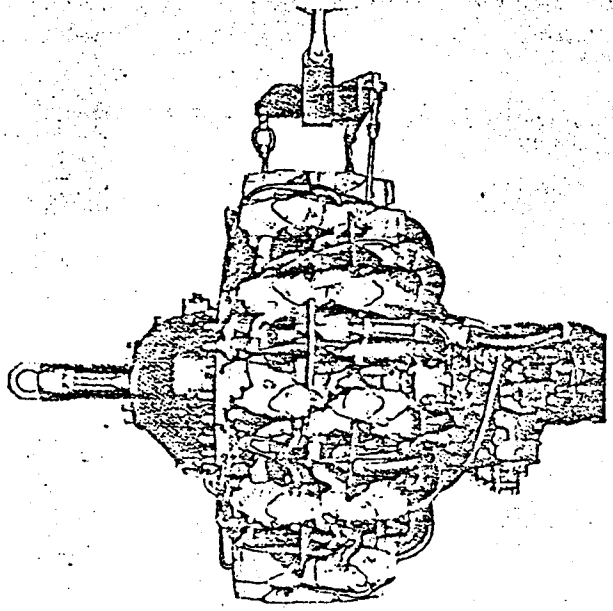

THREE-PRONG HOISTING SLING ATTACHED TO
ENGINE LIFTING LINKS (3 PLACES)

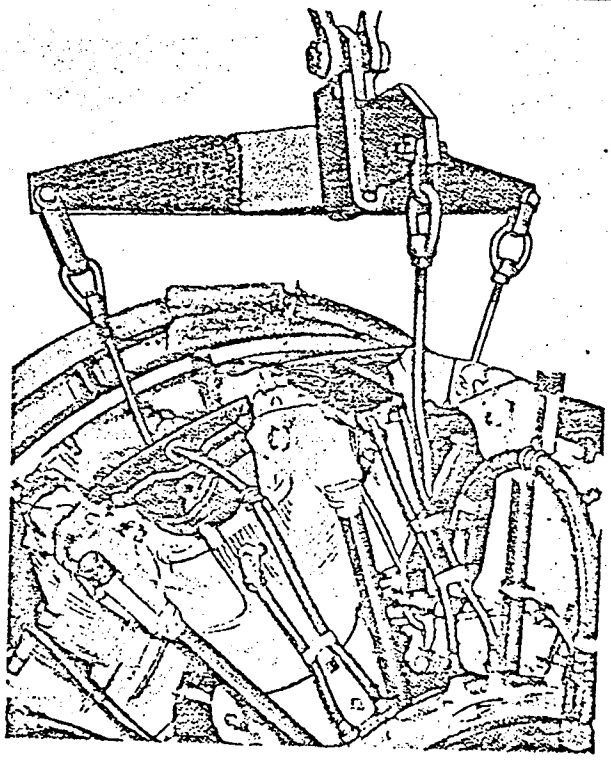

ENGINE IN HORIZONTAL (FLIGHT) POSITION,
USING THREE-PRONG HOISTING SLING

Figure 4-26. Engine Hoisting Methods

33.593

a. Remove the bolts from the flange connecting the upper and lower halves of the container.

b. Attach a suitable hoist to the hoisting lug, located on the top of the container, and carefully remove the top half of the container by lifting straight up until the propeller shaft is cleared.

c. Remove the bolts securing the carburetor to the mounting plate and remove the carburetor.

d. Remove the carton containing the engine spark plugs.

e. Remove the carburetor attaching bolts from the mounting bracket.

f. Remove the mounting bracket.

g. Remove the self-locking nuts attaching the engine mount brackets to the container support plate.

h. Remove the protector cap from the propeller shaft and install a suitable lifting eye on the end of the shaft.

i. Attach a suitable hoist to the lifting eye and carefully lift the engine from the lower half of the container.

j. Connect a 3-prong lifting sling to the engine lifting links, located at the top of the engine between the front and rear rows of cylinders.

k. Attach a suitable hoist to the sling and slowly raise the engine to the horizontal (flight) position.

l. Make certain the propeller shaft is protected and place the engine in the buildup stand. Secure the propeller shaft with the hinged-lock and bolt.

m. Remove the hoisting equipment from the engine and install the propeller shaft protector cap.

4-275. INSPECTION AND PREPARATION OF ENGINE FOR BUILDUP.

(See figures 4-12 and 4-13.)

a. Remove the dehydrating plugs from the cylinders and the plugs from the lower end of No. 7, 8, and 9 intake pipes.

b. Remove the front and rear drain plugs from the oil sump at the bottom of the engine.

c. Remove the blower drain, wash with cleaning solvent, Federal Specification VV-K-211B, and inspect.

d. Remove the main oil screen from the lower right side of the rear section, wash with cleaning solvent, Federal Specification P-S-661, and inspect.

e. Allow the surplus corrosion-preventive compound to drain from the openings.

CAUTION

Place a warning tag on the propeller shaft, stating that the shaft must not be turned until the proper depreservation procedures have been accomplished, and in no case prior to 1 week before installation or operation of the engine.

f. Install the drain fittings and tubes in the No. 7, 8, and 9 intake pipes.

g. Replace the front and rear oil sump drain plugs, blower drain plug, and the oil screen. Check the plugs for tightness and safety them with lockwire.

h. Install new dehydrator plugs in the cylinders.

i. Remove the protector cap from the propeller shaft and the propeller-shaft-tube cover from the inside of the propeller shaft. Replace the protector cap on the shaft.

j. Wash the exterior of the engine with kerosene, Federal Specification VV-K-211B, or solvent, Federal Specification P-S-661. Dry the engine with dry compressed air and clean cloths.

k. Clean and inspect the propeller shaft, and apply corrosion-preventive compound, Federal Specification MIL-L-16173.

l. Inspect the engine for any defects and damage due to shipping.

m. Check and list the engine and accessory numbers on the applicable data sheet.

n. Replace all damaged gaskets, seals, or crush washers.

o. Check all intake manifold packing gland nuts for proper seating and tightness.

p. Check the pushrod packing gland nuts, all Allen and pipe lugs, and the safetywiring.

q. Inspect all intercylinder rocker-box drain hose clamps for tightness.

r. Inspect the magnetos for the proper type cam and condition of the breaker points.

4-276. PREPARATION OF DIAPHRAGM FOR INSTALLATION.

(See figures 4-87 and 4-88.)

a. Install the propeller anti-icing pipe fitting on the upper right segment of the diaphragm for engine No. 1, or the upper left segment for engine No. 2.

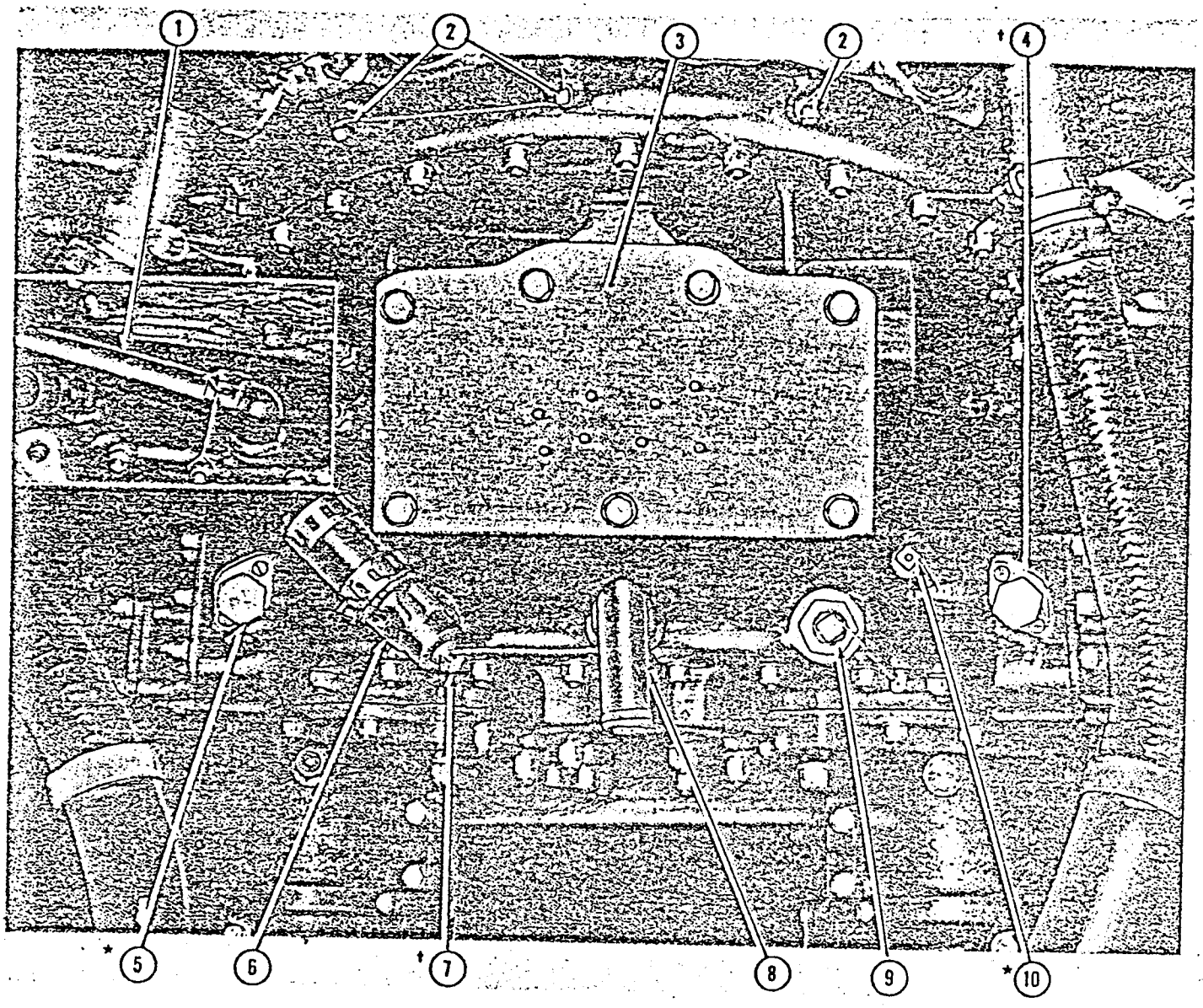

Figure 4-87. Engine Rear Section and Diaphragm Installations (Sheet 1 of 4)

33,595

Key to Figure 4-87 (Sheet 1 of 4)

Item	Nomenclature	Item	Nomenclature
1	Rear Case Breather R-1830-92 Engines	6.	Oil Tank Vent — Left Side
2.	Manifold Pressure Plugs	7.	Oil Separator Plug
3.	Carburetor Pad Cover	8.	Rear Case Breather R-1830-90D Engines
4.	Tachometer Drive Pad — Right Side	9.	Oil Tank Vent — Right Side
5.	Tachometer Drive Pad — Left Side	10.	Oil Separator Plug

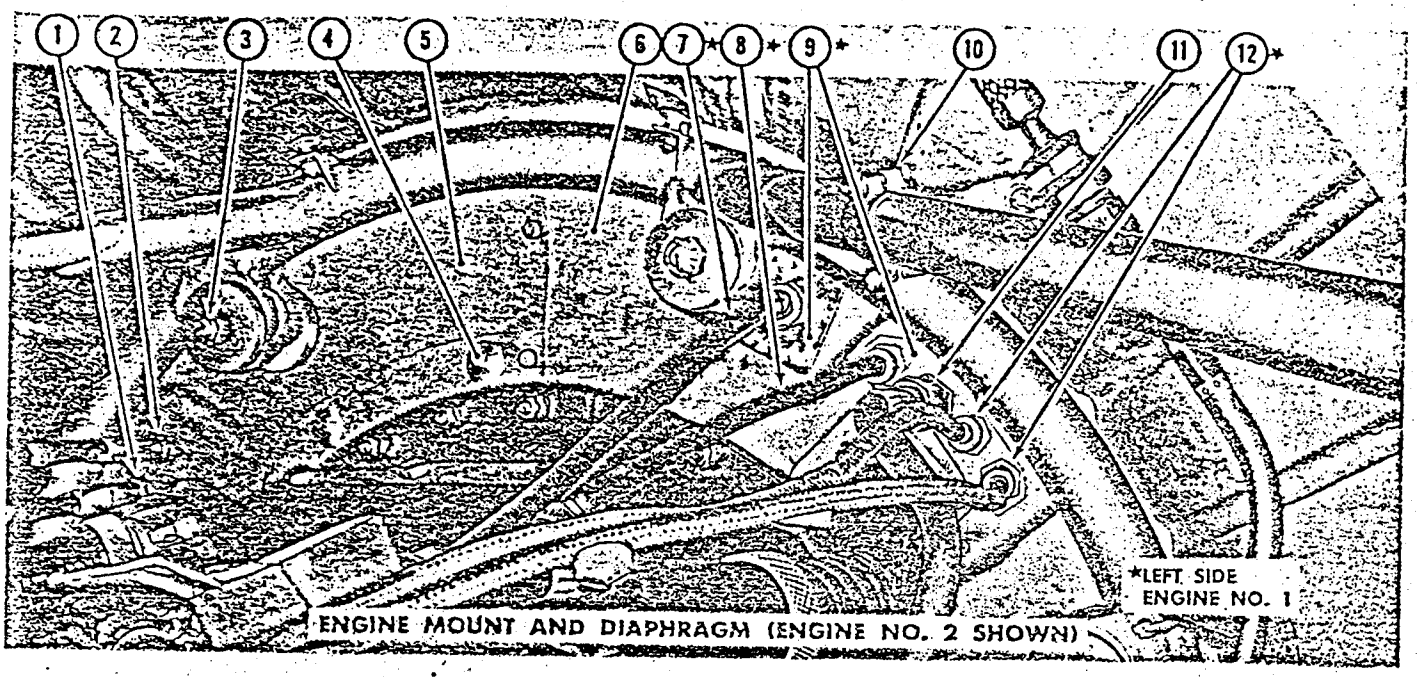

M-3

Figure 4-87. Engine Rear Section and Diaphragm Installations (Sheet 2 of 4)

Key to Figure 4-87 (Sheet 2 of 4)

Item	Nomenclature	Item	Nomenclature
1.	Propeller Anti-Icing Piping and Fittings	7.	Thermocouple Conduit and Fitting
2.	Primer Fitting and Flexible Hose	8.	Propeller Feathering Conduit and Fitting
3.	Engine Mount Attachment (typical)	9.	Steel Diaphragm Doublers
4.	Dimple for Pipe Plug Clearance (typical, 4 places, as required)	10.	Fire Extinguisher Pipe-to-Engine Mount Support Assembly
5.	Upper Left Diaphragm Segment	11.	Propeller Feathering Piping and Fitting
6.	Upper Right Diaphragm Segment	12.	Fire Detector Conduits and Fittings

b. Install the propeller feathering pipe fitting on the upper right segment of the diaphragm.

c. Install the primer pipe fitting on the upper right segment of the diaphragm for engine No. 1, or the upper left segment for engine No. 2.

d. Install the steel doubler and electrical fittings for the two fire detector conduits, propeller governor pressure switch conduit, and thermocouple conduit on the top left segment of the diaphragm for engine No. 1, or the top right segment for engine No. 2.

e. Install the asbestos seal and retainer plate for the oil sump vent pipe on the lower segment of the diaphragm.

f. Install the crankcase breather pipe asbestos seal and retainer plate on the left side of the lower segment of the diaphragm.

g. Install the left and right magneto blast tube fittings through the lower segment of the diaphragm with the 3¾-inch length extending aft.

h. Position and individually fit each segment of the diaphragm. Align the diaphragm by inserting engine mount bolts through each segment and the engine mount brackets.

i. Dimple the diaphragm as necessary to clear the manifold pressure plugs in the blower section.

4-277. INSTALLATION OF DIAPHRAGM AND EXHAUST COLLECTOR RING SUPPORT BRACKETS.

(See figures 4-87 and 4-88.)

a. Position the three diaphragm segments on the engine and insert the mounting bolts through the collector ring support brackets, engine mount brackets, and diaphragm.

Note

The two short engine mounting bolts are installed aft of cylinders No. 11 and 4 on engine No. 1, and aft of cylinders No. 5 and 12 on engine No. 2. Heads of all engine-

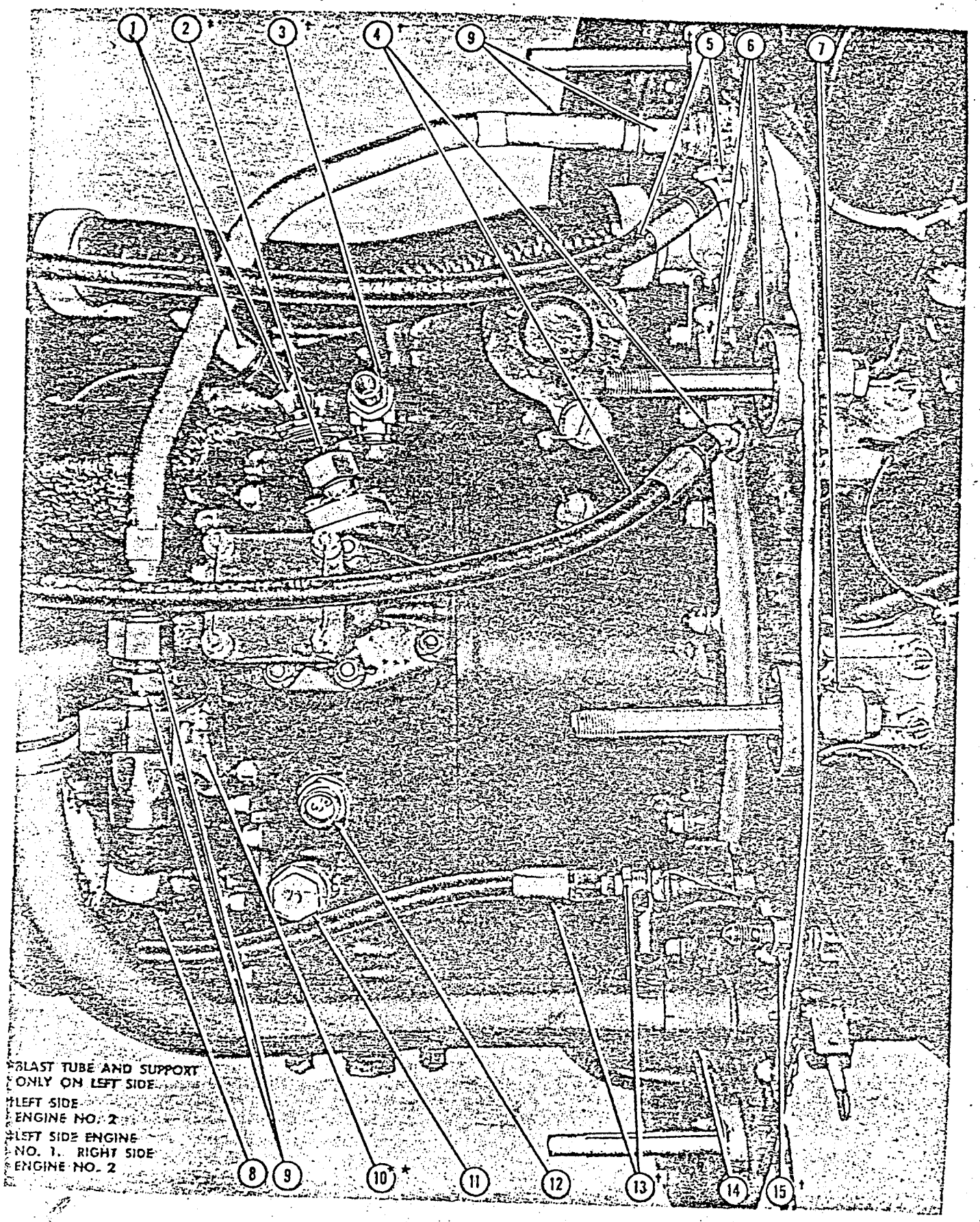

Figure 4-87. Engine Rear Section and Diaphragm Installations (Sheet 3 of 4)

33.597

Key to Figure 4-87 (Sheet 3 of 4)

Item	Nomenclature	Item	Nomenclature
1.	Oil Tank Vent Fitting	9.	Propeller Feathering Piping and Fitting
2.	Tachometer Drive Pad	10.	Propeller Feathering Piping and Magneto Blast Tube Support Bracket, and Attaching Blocks
3.	Oil Separator Fitting	11.	Oil Strainer Bypass Valve Cap
4.	Manifold Pressure Fitting and Flexible Hose	12.	Oil Temperature Bulb
5.	Primer Fitting and Flexible Hose Hose	13.	Oil Pressure Fitting and Flexible Hose
6.	Sandwich Washer and Engine Mount Bolt (typical)	14.	Magneto Blast Tube Fitting
7.	Engine Attach Fitting (typical)	15.	Propeller Anti-Icing Fitting
8.	Flexible Hose-to-Firewall		

mounting bolts must face forward, except the top left mount bolt will face aft. Before inserting the six long engine-mounting bolts through the engine-mount brackets and diaphragm, place the exhaust collector ring support brackets on the bolts.

b. Bolt the three diaphragm segments together, and check for the proper clearance.

c. Install the asbestos seals and retainer plates for the ignition conduits on the left and right sides of the diaphragm.

4-278. INSTALLATION OF PIPE FITTINGS TO REAR SECTION OF ENGINE.

(See figures 4-12 and 4-88.)

Note

When installing pipe fittings, apply a thin coat of thread lube, Federal Specification JAN-A-669, to the first three threads, and tape or cap all open fittings.

a. Oil separator fitting. (Engine No. 1.) Cut the safetywire and remove the plug from the rear case. Install a 90-degree elbow fitting to face 80 degrees to the right and safety with lockwire to the small adjacent plug. Install a straight fitting in the elbow.

b. Oil separator fitting. (Engine No. 2.) Cut the safetywire and remove the plug from the oil vent fitting. Install a 90-degree elbow to face 45 degrees aft from the up position and a 45-degree elbow to face to the left.

c. Manifold pressure fitting. (Engine No. 1.) Cut the safetywire and remove the plug from the right side of the rear section. Install a reducer and a restricted 45-degree elbow to face 45 degrees to the right from the down position. Use a bushing if necessary.

d. Manifold pressure fitting. (Engine No. 2.) Cut the safetywire and remove the plug from the left side of the rear section. Install a reducer and a restricted 45-degree elbow to face 45 degrees to the left from the down position.

e. Oil pressure fitting. (Engine No. 1 or 2.) Cut the safetywire and remove the plug from the right side of the rear section on engine No. 1 or the left side of the rear section on engine No. 2. Install a reducer and a restricted fitting, and safety with lockwire.

f. Right oil tank vent fittings. (Engine No. 1.) Cut the safetywire and remove the shipping plug. Install a 45-degree fitting to face 45 degrees to the right from the aft position, and safety with lockwire to the small adjacent plug.

g. Right oil tank vent fitting. (Engine No. 2.) Cut the safetywire and remove the shipping plug. Install a 45-degree fitting to face aft and safety with lockwire to the adjacent small plug.

h. Left oil tank vent fitting. (Engine No. 1.) Cut the safetywire and remove the plug. Install a 45-degree fitting to face 45 degrees to the left from the aft position.

i. Left oil tank vent fitting. (Engine No. 2.) Cut the safetywire and remove the plug. Install a 90-degree fitting to face 20 degrees to the left from the aft position.

j. Blower drain fitting. (Engine No. 1 or 2.) Cut the safetywire and remove the plug. Install a 45-degree fitting to face 45 degrees to the left from the aft position.

4-279. INSTALLATION OF STARTER.

(See figures 4-92, 4-99, and 4-101.)

a. Make certain that the starter to be installed has three teeth cut for clockwise rotation as viewed from the motor end of the starter.

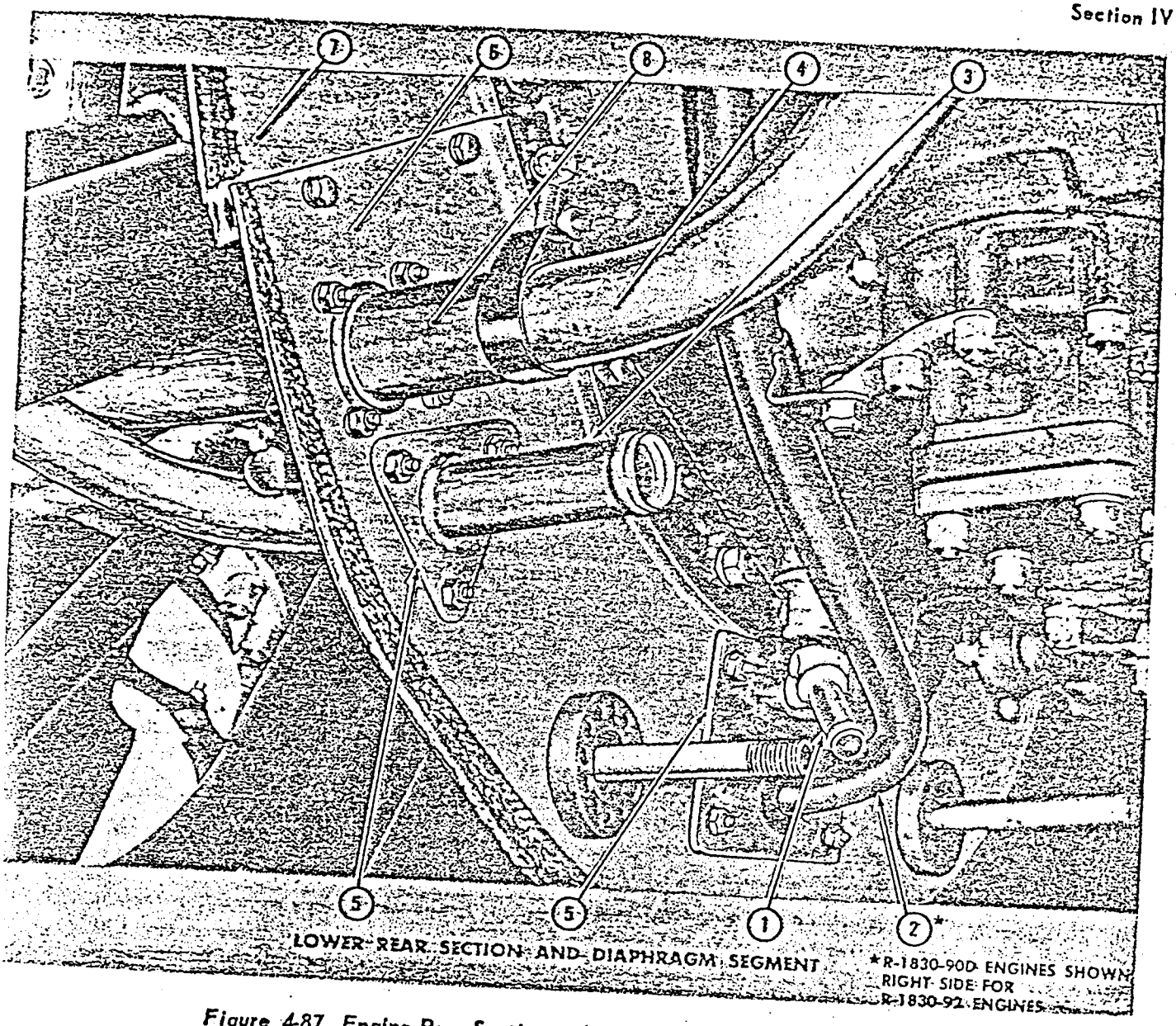

Figure 4-87. Engine Rear Section and Diaphragm Installations (Sheet 4 of 4)

33,598

Key to Figure 4-87 (Sheet 4 of 4)

Item	Nomenclature
1.	Blower Drain Fitting
2.	Oil Sump Vent Piping
3.	Rear Crankcase Vent Piping, Lower Section through Diaphragm
4.	Magneto Blast Tube
5.	Asbestos Seals and Retainer Plates
6.	Bottom Segment of Diaphragm
7.	Upper Left Segment of Diaphragm
8.	Magneto Blast Tube fitting

b. Make certain that the starter jaw and the engine jaw are identical as to number of teeth, size of jaw, and direction of rotation.

c. Make certain that, with the engine seal removed, the depth from the face of the mounting pad to the top of the engine jaw teeth is 1.688 (+0.016, —0.031) inch. This depth is necessary to insure a clearance of 0.094 inch between the engine jaw and the starter jaw when the starter jaw is fully retracted.

d. Clean the engine and starter mounting base and place a clean dry gasket on the studs.

e. Install the starter with the electrical connection positioned at 1 o'clock from the up position.

Note

Remove the paint, dirt, and grease under the three nuts on the flange to assure proper grounding.

f. Torque the nuts to 175 (±15) inch-pounds.

g. Record the starter information on the applicable data sheet.

4-280. INSTALLATION OF GENERATOR.
(See figures 4-92, 4-99, and 4-101.)

a. Remove the cover plate and gasket from the engine-mount pad.

b. Clean the pad and the generator mounting base.

Note

Remove all paint, grease, and dirt from the generator flange to assure good electrical bonding contact for generator mounting nuts.

c. Check the generator drive shaft for freedom of movement, by manually turning the shaft.

d. Apply a thin coat of grease, Federal Specification MIL-L-3545, on the generator drive spline.

e. Install the gasket and the generator, positioning the electrical terminal on No. 1 engine at 7 o'clock, No. 2 engine electrical terminal at 5 o'clock. Torque nuts to 175 (±15) inch-pounds.

CAUTION

Do not allow the weight of the generator to bear on the drive shaft to bend it.

f. If the blast tube adapter does not face an eight o'clock position, re-position, and install the adapter. Safety the adapter with lock wire.

Note

Some generators have only one retaining nut. If this condition exists, loosen and reposition the adapter. Tighten the retaining nut.

g. Record generator information on the applicable data sheet.

4-281 INSTALLATION OF STARTER AND GENERATOR BRACE ASSEMBLY.
(See figure 4-92.)

Note

The starter and generator brace assemblies are to be installed on all engines using a generator provided with a scalloped mount flange. Aircraft with engines having direct cranking starters do not need the braces installed.

a. Place the brace assembly on the starter and the ring assembly on the generator.

b. Align the two assemblies and install the channels, securing the generator to the starter.

c. Remove the four locknuts from the rear case of the engine and install the brace assembly. Check all locknuts for tightness.

4-282. INSTALLATION OF TACHOMETER GENERATOR.
(See figures 4-87, 4-99, and 4-101.)

a. Remove the cap from the tachometer drive fitting, located forward of the magneto, on the top left side for engine No. 1, or the top right side for engine No. 2.

b. Position and install the tachometer with the electrical fitting facing aft. Tighten the locknut and safety with lockwire.

Note

Some tachometer generators are installed with a clamp-type fitting. Tighten the clamp nuts and safety with lockwire.

c. Record tachometer generator information on the applicable data sheet.

4-283. INSTALLATION OF MAGNETO BLAST TUBES FORWARD OF DIAPHRAGM.
(See figures 4-87 and 4-93.)

a. Position the right magneto blast tube from the aft position, between cylinders No. 5 and 6, and clamp the forward end to the pushrod cover tube. Clamp the aft end of the blast tube to the fitting on the diaphragm.

Note

On some engines, a cross wire (bird cage) is installed on the forward end of each magneto blast tube.

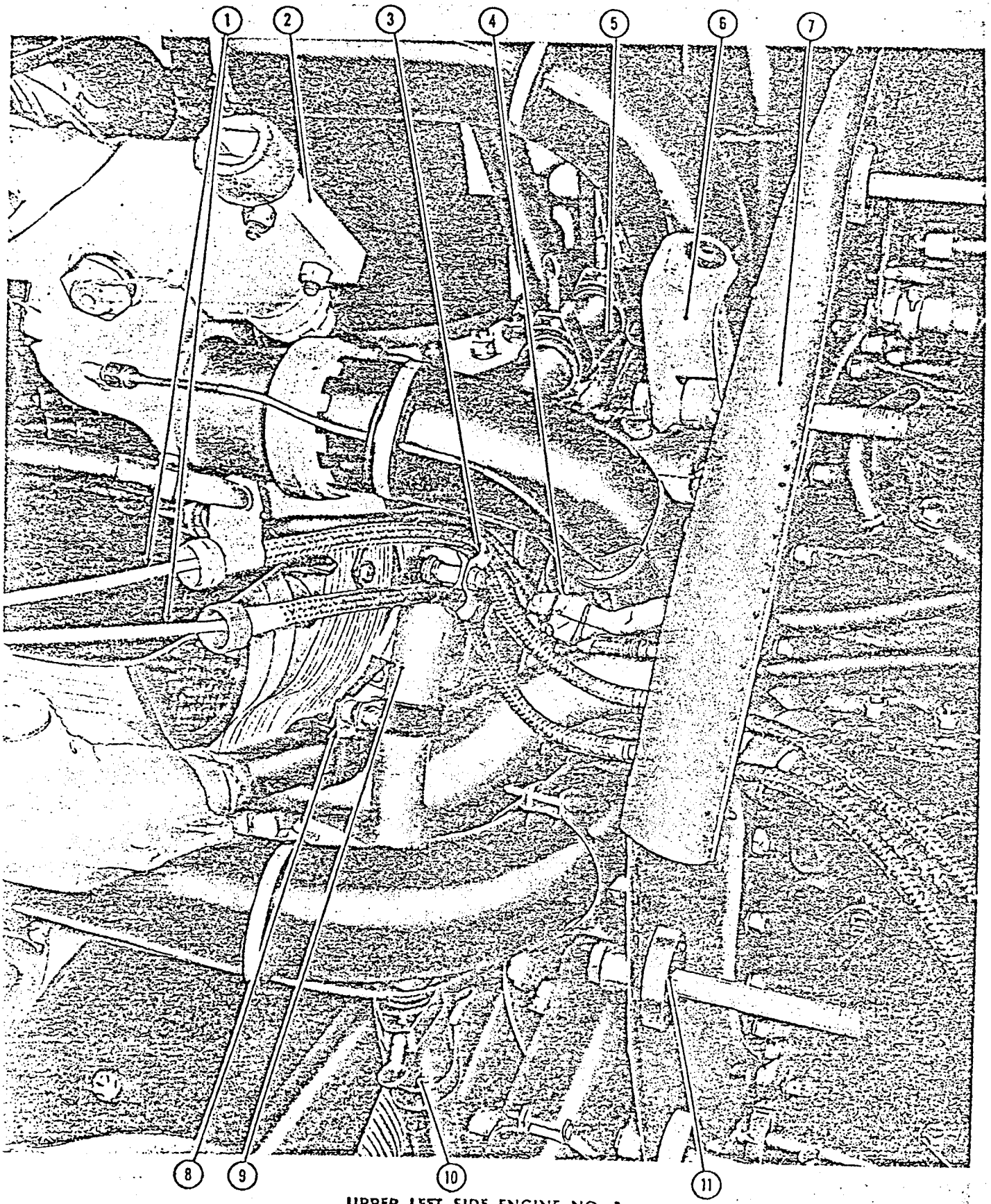

UPPER LEFT SIDE ENGINE NO. 1

Figure 4-88. Engine Installations Forward of Diaphragm (Sheet 1 of 2)

33.599

Key to Figure 4-88 (Sheet 1 of 2)

Item	Nomenclature	Item	Nomenclature
1.	Fire Detector Leads to Bow Ring	7.	Diaphragm Assembly
2.	Antidrag Ring Support Lug Assembly (typical)	8.	Piping Support Clamps
3.	Flexible Conduit Support Clamps	9.	Upper Section of Rear Crankcase Breather Piping
4.	Thermocouple Lead (splice point)	10.	Flexible Hose and Clamps Securing Upper and Lower Piping
5.	Upper Flexible Hose and Clamps for Rear Crankcase Breather Piping	11.	Engine-to-Engine Mount Attach Bolt and Sandwich Washer
6.	Exhaust Collector Ring Support Bracket		

b. Position the left magneto blast tube from the aft position, between cylinders No. 9 and 10, and clamp the forward end to the pushrod cover tube. Clamp the aft end of the blast tube to the fitting on the diaphragm.

4-284. INSTALLATION OF PROPELLER GOVERNOR.
(See figure 4-94.)

a. Remove the governor mount-pad cover plate and gasket, located on the nose case forward of cylinder No. 1.

b. Check that the governor drive shaft turns freely by hand and that the oil control plugs in the governor base and body are in the B-B holes, corresponding to clockwise rotation of the governor drive. The body oil control plug can be seen through the hole in the base.

c. Clean the mount pad and the governor mounting base.

d. Position the mounting gasket on the mount with the raised screen section facing up.

e. Place the governor on the gasket and install the washers and stainless steel self-locking nuts. Tighten the nuts evenly, and torque to 150 to 170 inch-pounds.

CAUTION

Excessive tightness will displace the gasket material in the vicinity of the mounting studs, resulting in warping of the governor base and subsequent leakage.

f. Record propeller governor information on the applicable data sheet.

4-285. INSTALLATION OF PROPELLER FEATHERING PIPING FORWARD OF DIAPHRAGM.
(See figures 4-87, 4-88, and 4-94.)

a. Position the propeller feathering pipe between cylinders No. 1 and 14, and connect the aft end of the pipe to the fitting on the right side of the diaphragm.

b. Install the Vee brace assembly between cylinders No. 2 and 14, and clamp the forward end of the pipe to the brace.

c. Install two 45-degree elbows, facing aft, in the forward end of the pipe.

4-286. INSTALLATION OF FLEXIBLE HOSE FROM PROPELLER FEATHERING PIPE TO PROPELLER GOVERNOR. *(See figure 4-94.)* Connect the propeller feathering flexible hose to the elbow fitting between the cylinders and the swivel fitting on the propeller governor.

4-287. INSTALLATION OF PROPELLER GOVERNOR CONTROLS.
(See figure 4-94.)

a. Install the propeller governor control mount and bracket assembly on the cylinder No. 4 rocker box for engine No. 1, or on the cylinder No. 12 rocker box for engine No. 2.

b. Install the control cable on the governor control pulley, and route the cable through the control bracket assembly on the rocker box.

4-288. INSTALLATION OF ELECTRICAL CONDUIT FROM PROPELLER GOVERNOR TO DIAPHRAGM.
(See figures 4-87, 4-88, and 4-94.)

a. Route the propeller feathering conduit between cylinders No. 1 and 14 to the fitting on the left side of the diaphragm for engine No. 1, or the right side for engine No. 2.

b. Attach the aft end of the conduit to the fitting on the diaphragm, and connect the forward electrical connection to the pressure cutout switch on the governor. Safety with lockwire.

c. Secure the conduit as necessary, using suitable support clamps and attachments.

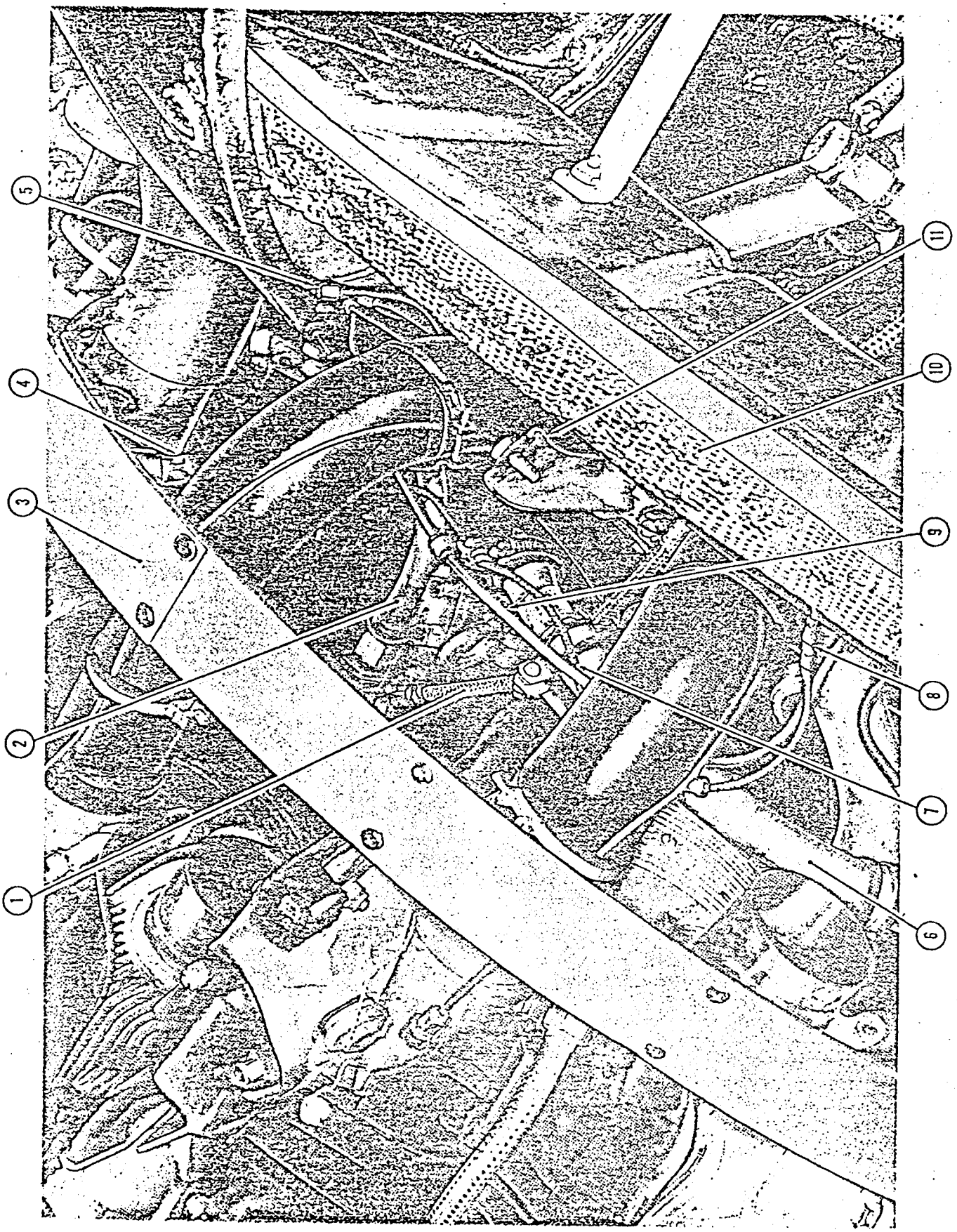

Figure 4-88. Engine Installations Forward of Diaphragm (Sheet 2 of 2)

33,600

Key to Figure 4-88 (Sheet 2 of 2)

Item	Nomenclature	Item	Nomenclature
1.	Propeller Governor Electrical Control Conduit	7.	Thermocouple Lead
2.	Propeller Feathering Piping (typical)	8.	Thermocouple Lead Splice
3.	Fire Detector Bow Ring	9.	Primer Distributor-to-Diaphragm Piping
4.	Fire Detector	10.	Diaphragm Assembly
5.	Primer (spider) Distributor	11.	Exhaust Collector Ring Support Bracket
6.	Rear Crankcase Breather Piping		

4-289. INSTALLATION OF BREATHER PIPING FROM REAR CRANKCASE TO DIAPHRAGM.

(See figures 4-87 and 4-88.)

a. Connect the upper section of the breather piping to the fitting on the crankcase with a short flexible hose. Torque the thumbscrew clamps to 25 inch-pounds.

b. Insert the lower end of the lower section through the fitting on the left side of the diaphragm, and connect the upper and lower sections with a short flexible hose and the thumbscrew clamps.

c. Secure the breather piping to the pushrod cover tubes of cylinders No. 11 and 13, using suitable clamps and attachments.

4-290. INSTALLATION OF REAR SECTION BREATHER PIPING.

(See figures 4-87, 4-99, and 101.)

a. *R-1830-92 engines.* Route the breather pipe from the pipe and elbow fitting on top of the accessory case. The pipe should face approximately 90 degrees to the left from an aft position, down the left side of the engine to the position shown in figure 4-95.

b. Connect the upper end to the pipe, using a short flexible hose and clamps.

c. *R-1830-90D engines.* Route the breather pipe from the elbow fitting on top of the accessory case; the elbow fitting should face aft to the position shown in figure 4-94.

d. Connect the upper end to the pipe, using a short flexible hose and clamps.

4-291. INSTALLATION OF PRIMER PIPING, DISTRIBUTOR TO DIAPHRAGM.

(See figures 4-87 and 4-88.)

a. Remove the plug from the primer distributor (spider) attached to the cylinder No. 1 intake pipe.

b. Install a 90-degree elbow fitting facing right for engine No. 1, or facing left for engine No. 2.

c. Connect the pipe to the distributor and the fitting on the diaphragm.

4-292. INSTALLATION OF PROPELLER ANTI-ICING FEEDER TUBE ASSEMBLY AND PIPING.

(See figures 4-87 and 4-96.)

a. Attach the feeder assembly to the two lower studs securing the thrust-nut retaining plate.

b. Install the 45-degree elbow fitting facing left for engine No. 1, or facing right for engine No. 2.

c. *Engine No. 1.* Slip a suitable length of hose over the anti-icing piping for protection, and route the piping between cylinders No. 6 and 7 to the fitting on the right side of the diaphragm.

d. *Engine No. 2.* Slip a suitable length of hose over the anti-icing piping for protection, and route the piping between cylinders No. 11 and 12 to the fitting on the upper left side of the diaphragm.

e. Connect the piping to the fitting on the diaphragm and, using a short flexible hose and thumbscrew clamps, connect the piping to the elbow fitting on the feeder assembly. Torque the thumbscrew clamps to 25 inch-pounds.

f. Secure the piping as necessary, using suitable support clamps and attachments.

4-293. INSTALLATION OF OIL TEMPERATURE BULB.

(See figure 4-87.)

a. Cut the safetywire and remove the plug from the right side of the rear section.

b. Install the oil temperature bulb and safety with lockwire.

4-294. INSTALLATION OF MAGNETO BLAST TUBES AND PROPELLER FEATHERING PIPE AFT OF DIAPHRAGM.

(See figures 4-87, 4-99, and 4-101.)

a. Remove the two nuts from the lower outboard edge of the left and right magneto mounting pads, and install the support brackets for the magneto blast tubes.

b. Position and connect the propeller feathering pipe to the fitting on the upper side of the diaphragm.

c. Using a union fitting, connect the pipe-to-firewall flexible hose to the lower end of the pipe.

d. Secure the flexible hose to the magneto blast tube bracket, using the mounting blocks as shown in figure 4-13.

e. Connect the left and right magneto blast tubes to the fittings on the diaphragm. Secure the tubes to the support brackets, using suitable clamps and attachments.

4-295. INSTALLATION OF FIRE DETECTOR AND ANTIDRAG RING SUPPORTS AND BRACKETS.

(See figures 4-88 and 4-100.)

a. Install the fire detector bow ring mounting brackets on the rear cylinder exhaust rocker-box mounting lugs.

b. Install the antidrag ring supports (lug assemblies) on the intake rocker-box mounting lug of each cylinder.

Note

Make certain that a suitable length of rubber hose is installed on each lug assembly.

4-296. INSTALLATION OF FIRE DETECTOR BOW RING AND FLEXIBLE CONDUIT ASSEMBLIES.

(See figure 4-88.)

a. Position the bow ring on the engine, and attach the bow ring to the mounting brackets on the rear cylinder exhaust rocker-box mounting lugs.

b. Connect the flexible conduits to the couplings on the left side of the diaphragm on engine No. 1, or the right side on engine No. 2, and connect the conduits to the bow ring.

c. Secure the conduits as necessary, using suitable clamps and attachments.

d. Connect the short fire detector conduit assembly, engine section disconnect fitting to diaphragm, to the upper coupling on the diaphragm.

e. Connect the long fire detector conduit assembly, firewall electrical connector to diaphragm, to the lower coupling on the diaphragm.

4-297. INSTALLATION OF EXHAUST COLLECTOR RING AND COMPONENTS.

(See figures 4-89 and 4-90.)

a. Begin the assembly of the exhaust collector ring with the large wye segment. Insert the exhaust tubes into the openings in the wye long tube for the front cylinder and short tube for the rear cylinder, until the ears overlap and the holes are aligned. Insert the flat-head pin, and install the washer and cotter key.

b. Install the tubes in each segment of the collector ring, as outlined in step a.

c. Remove the plastic shipping covers from the exhaust ports, position the short collector tubes on the studs, and insert the tubes.

d. Secure the collector tube collars to the cylinders, using corrosion-resistant steel washers and stainless steel self-locking nuts.

e. Progressively install each segment and attach the six small segments to the support brackets on the engine-to-engine mount attach bolts, as outlined in the following steps.

f. Insert the long and short tubes into the exhaust port tubes. Join the segments by sliding the splitring assembly over the previously installed section and aligning the grooves in the exhaust segment and the split attach-ring assembly. Tighten the nuts until the ring is secure.

g. Connect the telescoping extension (universal joint) on the tailpipe, using the three spring-loaded bolts.

h. Make certain all segments are bolted to the support brackets, all nuts are tight, and cotter pins are installed.

4-298. INSTALLATION OF COWLING INNER RING AND ENGINE MOUNT ASSEMBLY.

(See figure 4-91.)

a. Install the exhaust shroud on the inner ring assembly.

b. Attach the inner ring assembly to the engine mount, using bolts, spacers, and self-locking nuts, including bonding cables at the two top and bottom attach points.

c. Install the rear accessory cowling attach formers, as shown on figure 4-91.

d. Insert the eight engine-mount support shock bushings in the engine-to-mount attach holes.

e. Position the forward sandwich washer on each engine-mount attach bolt with the perforation facing aft, and place the engine mount assembly on the attach bolts.

f. Position the rear sandwich washer on each bolt with the perforation facing forward.

g. Install the castle nuts, torque to 250 (+25 —0) inch-pounds, and install the cotter pins.

h. Connect all engine-mount bonding cables to the engine rear case attach studs.

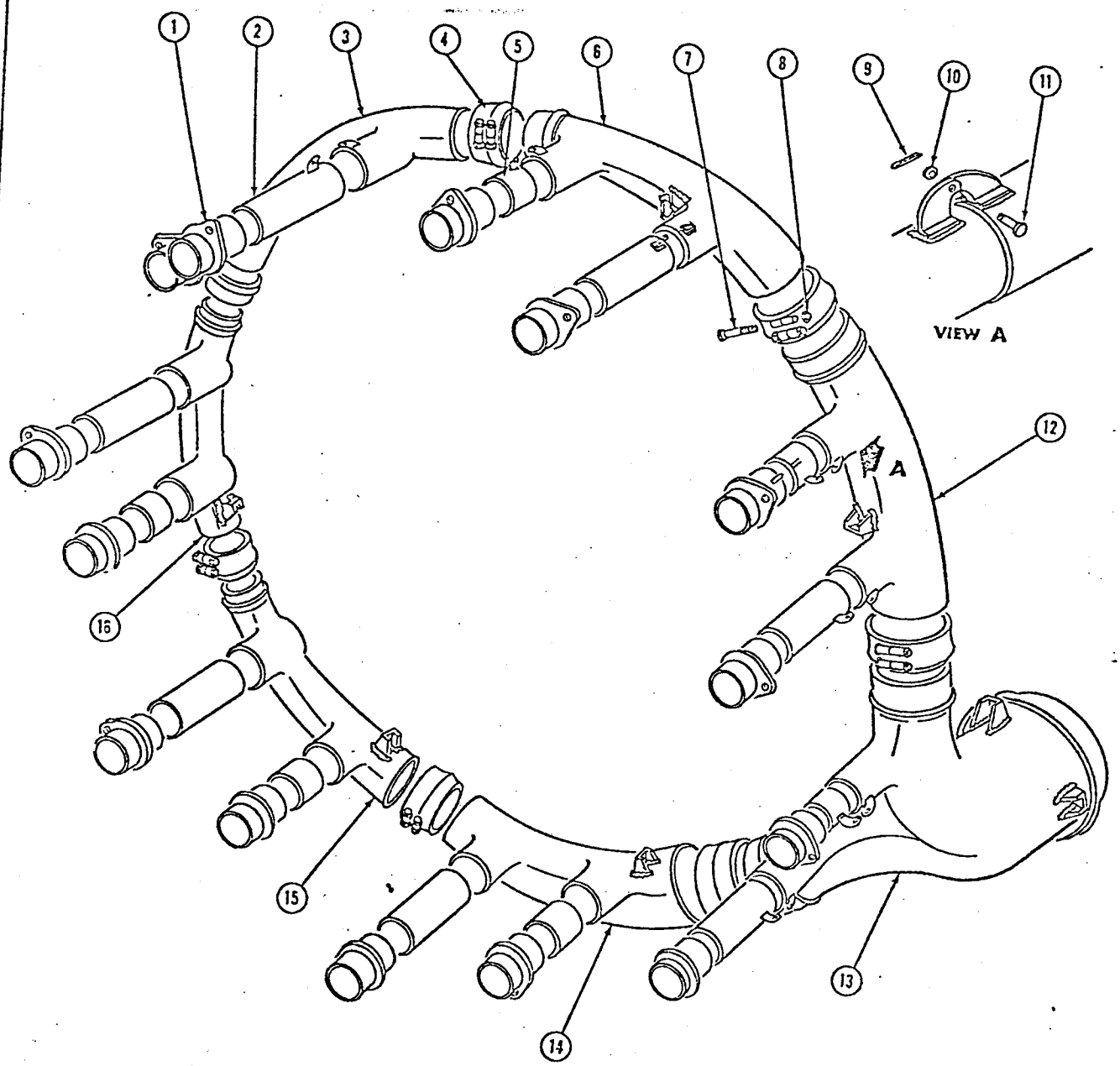

1. Exhaust Port Stack Assembly
2. Exhaust Connector Tube Front Cylinder
3. Segment Assy — Inboard Top
4. Segment Joining Clamp
5. Exhaust Connector Tube Rear Cylinder
6. Segment Assy — Outboard Top
7. Aircraft Bolt
8. Castle Nut
9. Cotter Pin
10. Washer
11. Flat Head Pin
12. Segment Assy — Outboard
13. Segment Assy — Outboard Lower Side
14. Segment Assy — Bottom
15. Segment Assy — Inboard Bottom
16. Segment Assy — Inboard

LH installation shown.

RH installation same, but collector ring rotated clockwise 5 ports.

Figure 4-89. Exhaust Collector Ring Disassembled

33,607

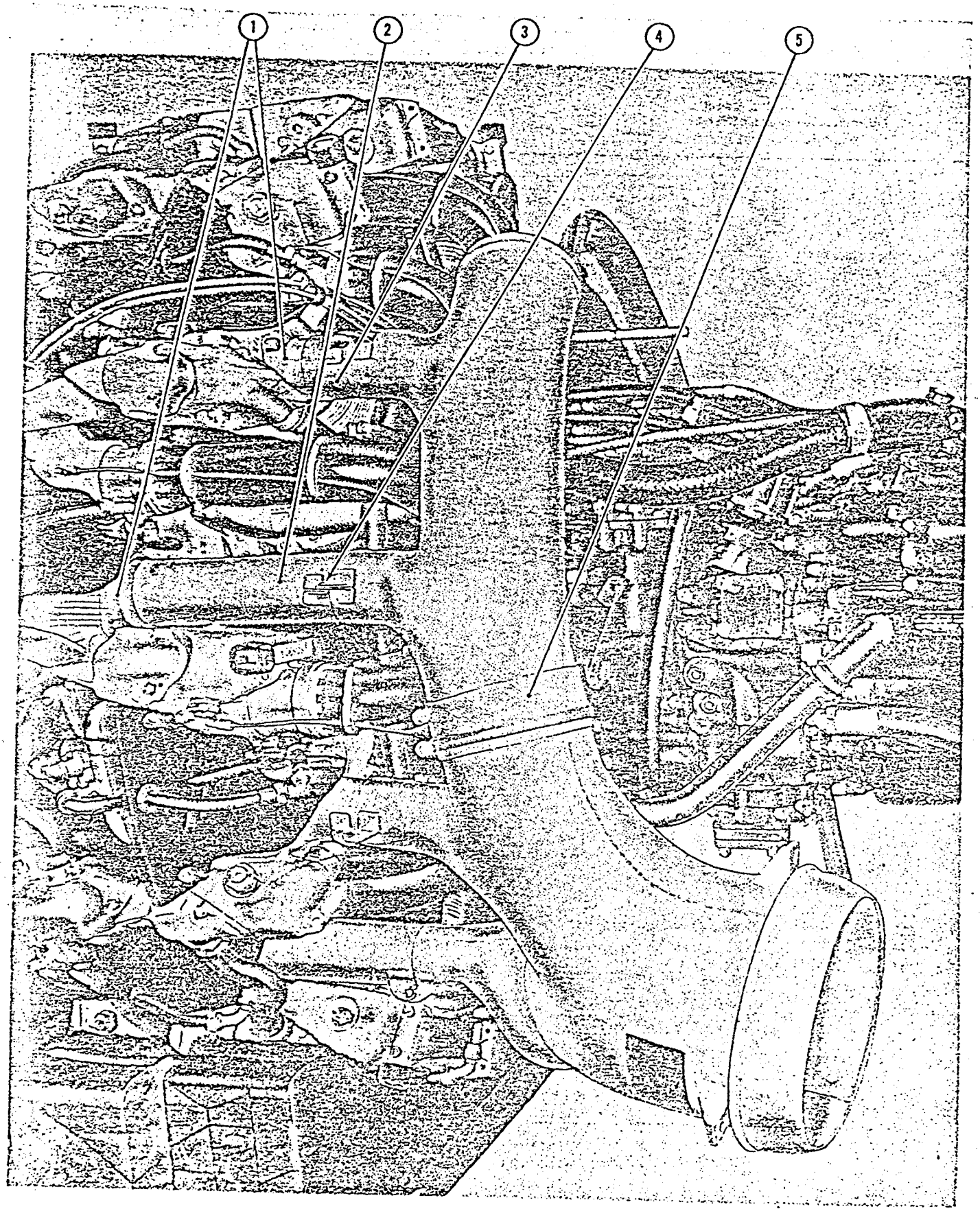

Figure 4-90. Installing Exhaust Collector Ring Assemblies

33.60B

Key to Figure 4-90

Item	Nomenclature
1.	Collector Attaching Collars
2.	Collector Ring Tube (long)
3.	Collector Ring Tube (short)
4.	Securing Pins
5.	Split Joint Ring

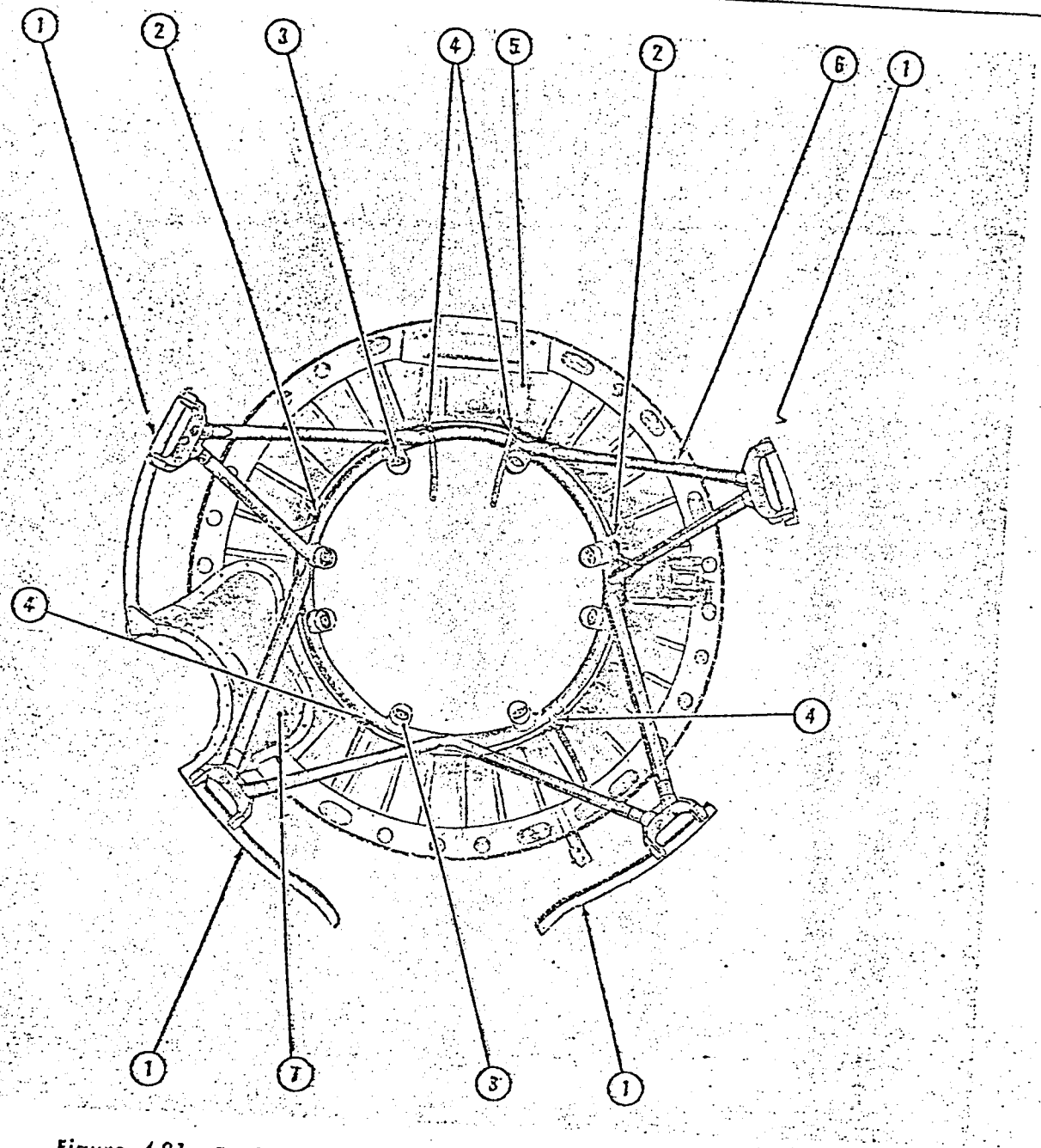

Figure 4-91. Engine Mount and Cowling Inner Ring Attachments

33,609

Key to Figure 4-91

Item	Nomenclature
1.	Cowling Attach Plate Assembly
2.	Ring-to-Mount Attach Point
3.	Engine Mount Support Shock Bushing
4.	Ring-to-Mount and Bonding Cable Attach Point
5.	Cowling Inner Ring Assembly
6.	Engine Mount Assembly
7.	Exhaust Shroud
8.	Engine-to-Engine Mount Attach Fitting

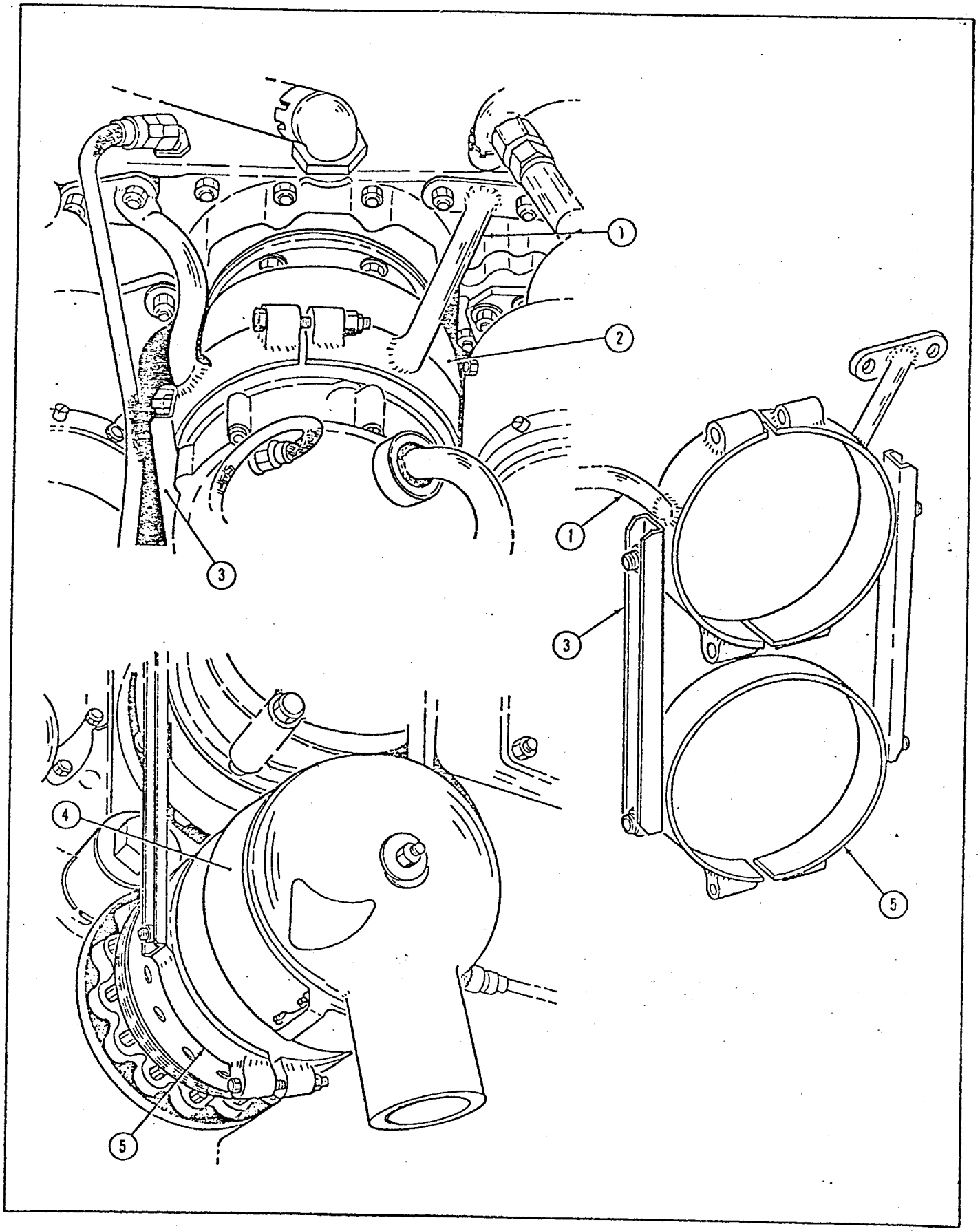

Figure 4-92. Starter and Generator Brace Installation

33.602

Key to Figure 4-92

Item	Nomenclature	Item	Nomenclature
1.	Starter Brace Assembly	4.	Generator
2.	Starter	5.	Starter Brace, Generator Ring Assembly
3.	Starter Brace Channel		

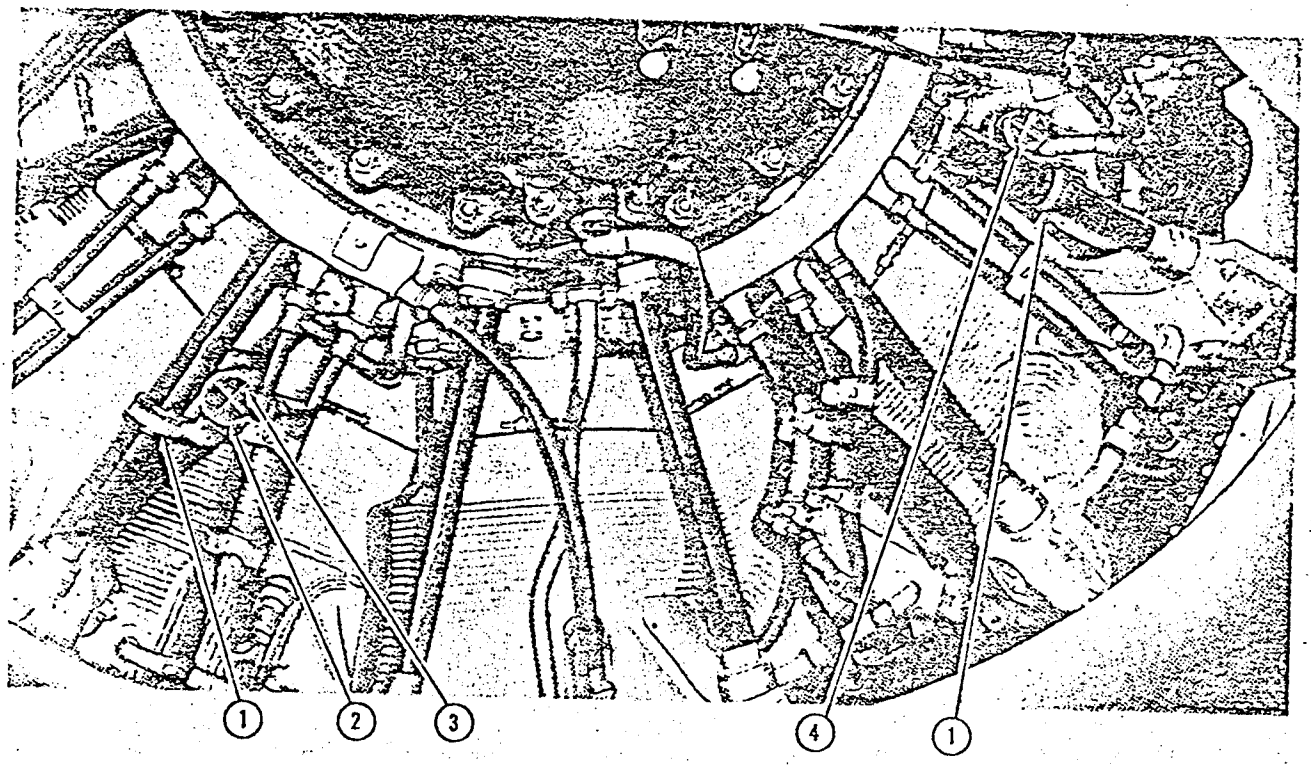

Figure 4-93. Magneto Blast Tubes Installed—Forward of Diaphragm

33,603

Key to Figure 4-93

Item	Nomenclature	Item	Nomenclature
1.	Blast Tube Support Clamps	3.	Cross Wires (on some airplanes)
2.	Right Magneto Blast Tube	4.	Left Magneto Blast Tube

4-299. INSTALLATION OF PROPELLER GOVERNOR CONTROL CABLES AND FAIRLEADS.
(See figure 4-94.)

a. Route the control cable through the holes in the cylinder deflector plate, and install the fairleads and leather bushings.

b. Route the cable through the inner ring assembly and install the fairlead assembly.

4-300. INSTALLATION OF FIRE EXTINGUISHER SPRAY RING.
(See figures 4-99 and 4-101.)

a. Locate and assemble the three sections of the spray ring, so the tee fitting will be on the lower left side for engine No. 1, or the right side for engine No. 2. The union fitting will be on the opposite side.

b. Position the ring assembly on the engine mount and secure the piping at all mount tubes, using suitable support clamps and attachments.

c. Install the flared tube plug on the end of the upper left pipe section.

d. Install the tee-to-firewall metal flexible hose assembly on the tee fitting.

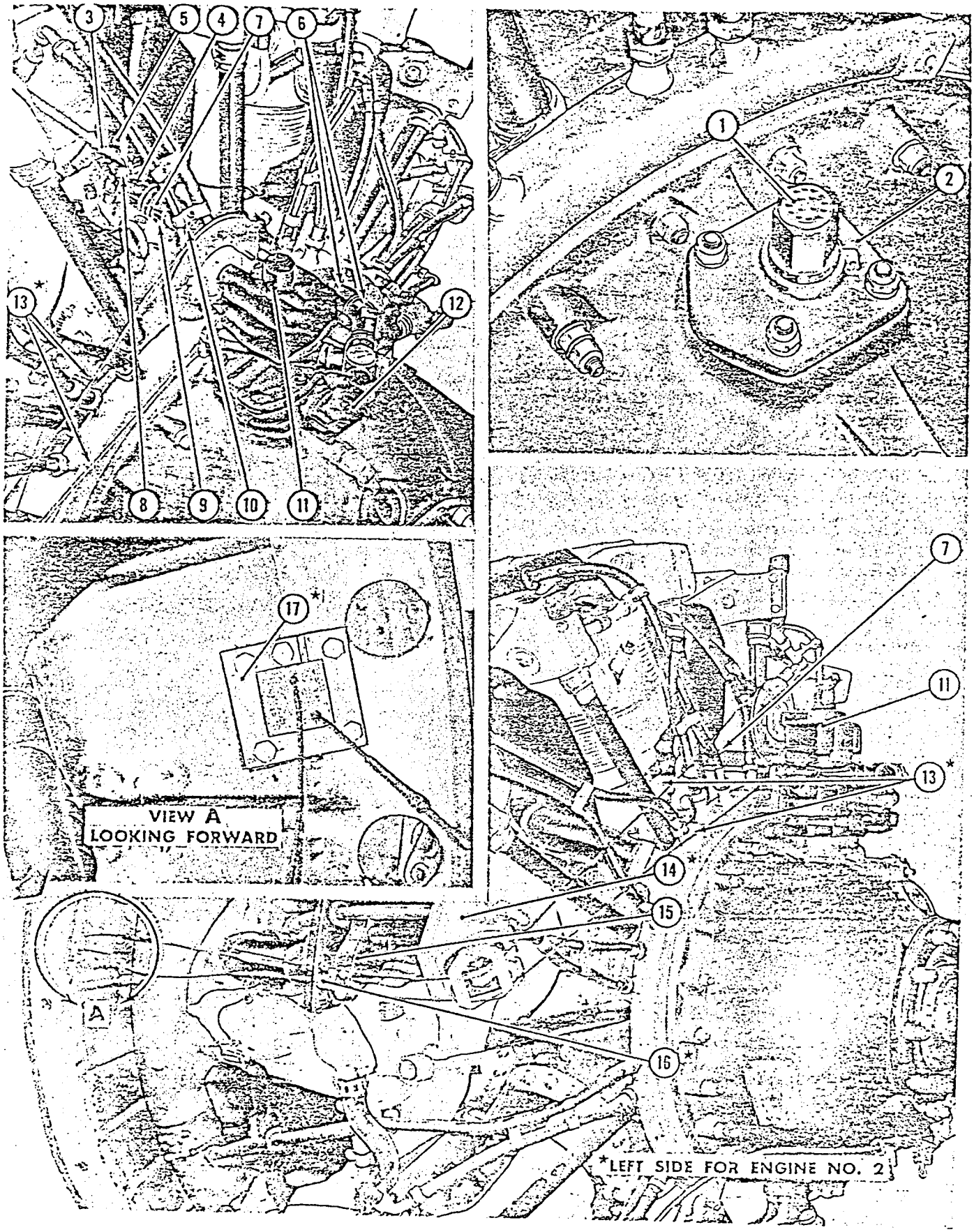

Figure 4-94. Propeller Governor, Governor Controls, and Piping Installed

V2-9

4-301. INSTALLATION OF ENGINE SECTION PULL BOX, THERMOCOUPLE, AND ELECTRICAL CONDUIT ASSEMBLIES.

(See figures 4-88, 4-99, and 4-101.)

a. Mount the pull box, with the cover plate facing outward, on the upper left tube of the engine mount for engine No. 1, or the upper right tube for engine No. 2.

b. Install the thermocouple on cylinder No. 13 for engine No. 1, or cylinder No. 1 for engine No. 2.

c. Insert the thermocouple lead, top forward conduit on the pull box, through the top fitting on the diaphragm and splice it to the lead from the thermocouple. Tape and shellac the splice.

d. Connect the propeller feathering lead, conduit below the thermocouple lead, to the lower or propeller feathering fitting on the diaphragm.

e. Connect the tachometer generator lead, conduit on back of pull box, to the tachometer on the left side for engine No. 1, or the right side for engine No. 2.

f. Connect the oil temperature lead, forward bottom conduit, to the oil temperature bulb on the right side of the rear section, for engine No. 1 or 2.

g. Inside the engine section pull box, splice the wire that leads from the propeller governor to the wire leading to pin No. 2 in the main firewall plug.

h. Secure all conduits as shown on the illustrations.

4-302. INSTALLATION OF INDUCTION VIBRATOR.

(See figures 4-99 and 4-101.)

a. Mount the induction vibrator on the engine-mount tube, just aft of the engine section pull box, with the single outlet facing outward.

Note

On some early engines, a booster coil is used in place of the induction vibrator. If a booster coil is used, magnetos with booster facilities must be installed.

b. Install the conduit connecting the vibrator to the pull box with the single fitting on the outward side of the vibrator and the aft fitting on the pull box.

c. Secure the conduit as necessary.

4-303. INSTALLATION OF CARBURETOR, SCREEN, AND ADAPTER.

(See figures 4-97, 4-98, 4-99, and 4-101.)

a. Remove the cover plate from the carburetor mount pad and remove the dehydrator bags. Inspect the impeller and blower section for any foreign matter that will cause damage to the engine.

b. *R-1830-90D engines.* Mount and install the carburetor on the engine mount pad, using gasket, (see Note under paragraph 4-165) and the seven bolts which were shipped with the engine. Torque the bolts to 200 (+25, —0) inch-pounds.

WARNING

To prevent the possibility of distorting the carburetor by improper torquing of the bolts or nuts, install them all the way around the carburetor and snug them down. Start at the center of the carburetor and torque out to each side.

Note

On the R-1830-90D engines, the rear case carburetor-mounting pad is horizontal. On the R-1830-92 engines, the rear case carburetor-mounting pad slants down and aft.

Key to Figure 4-94

Item	Nomenclature	Item	Nomenclature
1.	Dehydrator Plug	10.	Propeller Feathering Conduit
2.	Governor Mount Cover Plate	11.	Propeller Governor
3.	"V" Brace — Long Tube	12.	Propeller Feathering Electrical Connector
4.	Propeller Feathering Piping	13.	Governor Control Cable
5.	"V" Brace — Short Tube	14.	Governor Control Mount and Bracket Assembly
6.	Two 45-degree Elbows	15.	Cylinder Deflector Assembly
7.	Propeller Feathering Flexible Hose	16.	Control Cable Fairleads and Bushings
8.	Pipe-to-"V" Brace Support Clamp	17.	Inner Ring Fairlead Assembly
9.	Elbow Pipe Fitting		

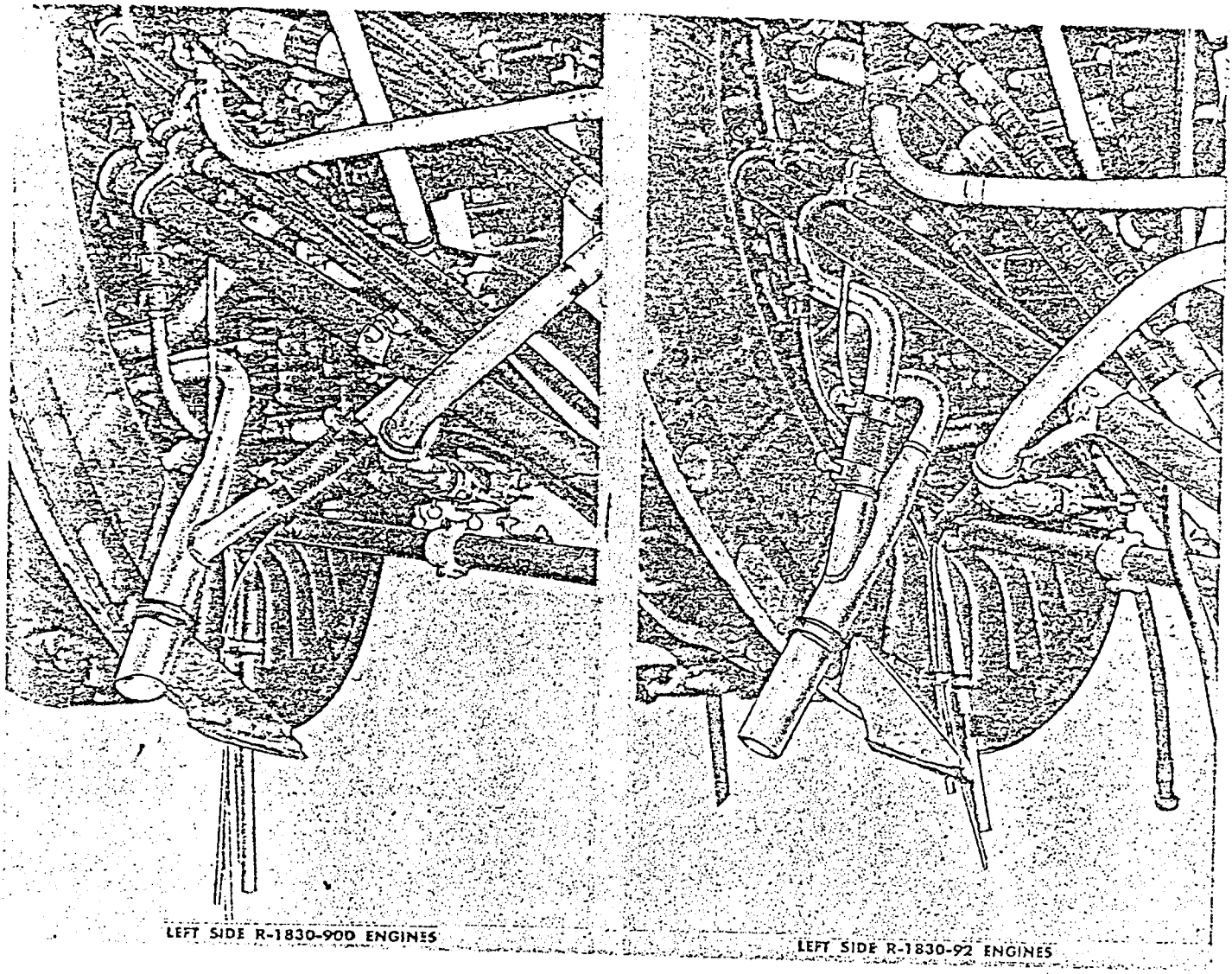

Figure 4-95. Engine Section Breather and Drainpiping—Aft of Inner Ring Assembly

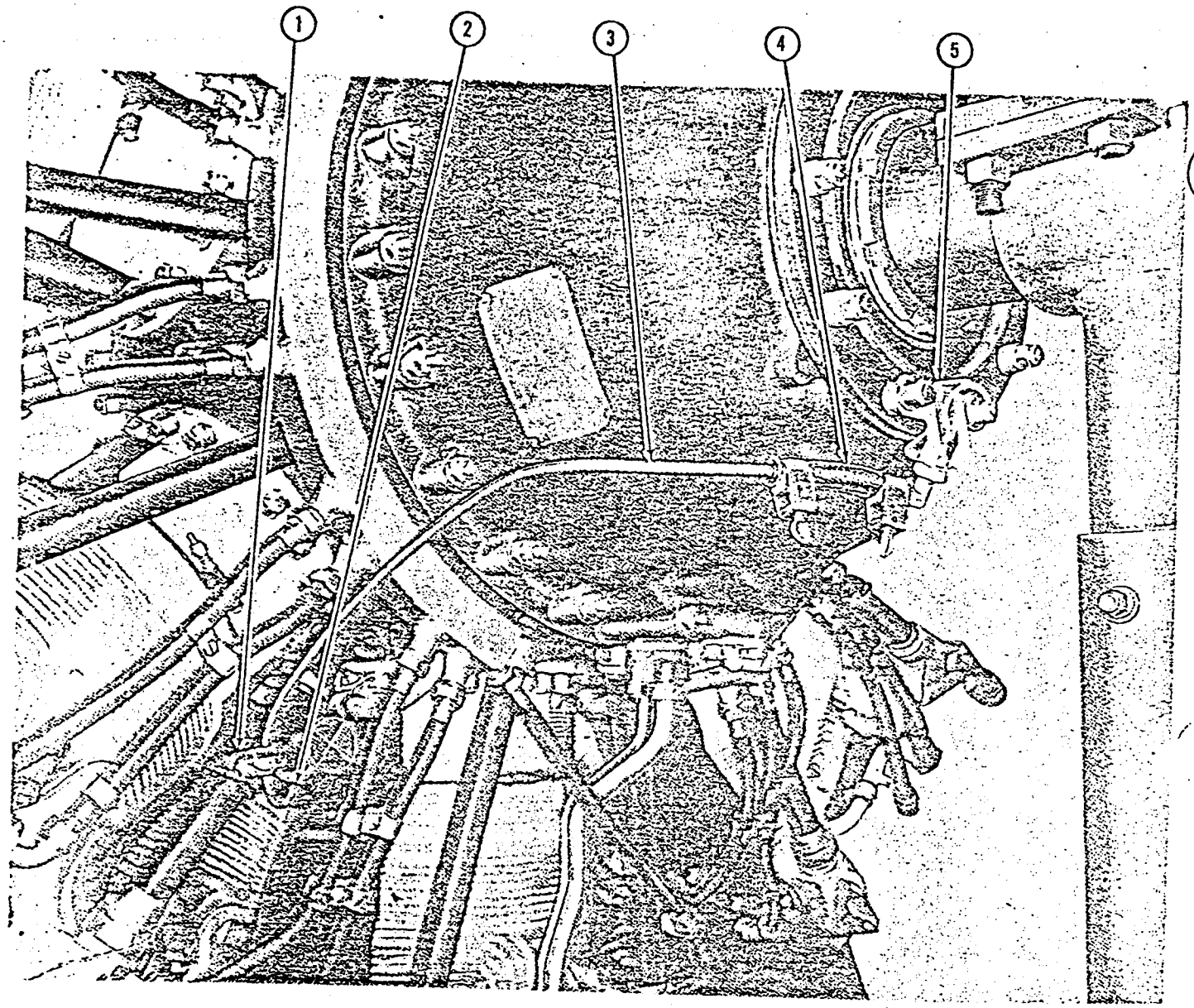

Figure 4-96. Propeller Anti-Icing Feeder Tube Assembly and Piping Installed

33,606

Key to Figure 4-96

Item	Nomenclature	Item	Nomenclature
1.	Pipe-to-Pushrod Cover Support Clamps	3.	Anti-Icing Piping
2.	End of Protector Hose — Over Piping Between Cylinders	4.	Pipe-to-Feeder Assembly Hose and Clamps
		5.	Anti-Icing Feeder Assembly

c. *R-1830-92 engines.* Mount and install the carburetor and adapter on the engine mount pad, using self-locking nuts. Torque the nuts to 200 (+25, —0) inch-pounds and install the carburetor brace.

d. Mount the screen and airscoop adapter on the carburetor with one gasket above and one below the screen. Install the bolts, tighten, and safety with lock-wire.

e. Cover the air intake adapter to prevent the entrance of foreign matter.

4-304. INSTALLATION OF CARBURETOR FIRE EXTINGUISHER AND AIR TEMPERATURE BULB.

(See figures 4-98, 4-99, and 4-101.)

a. Install the fire extinguisher spray nipple on the

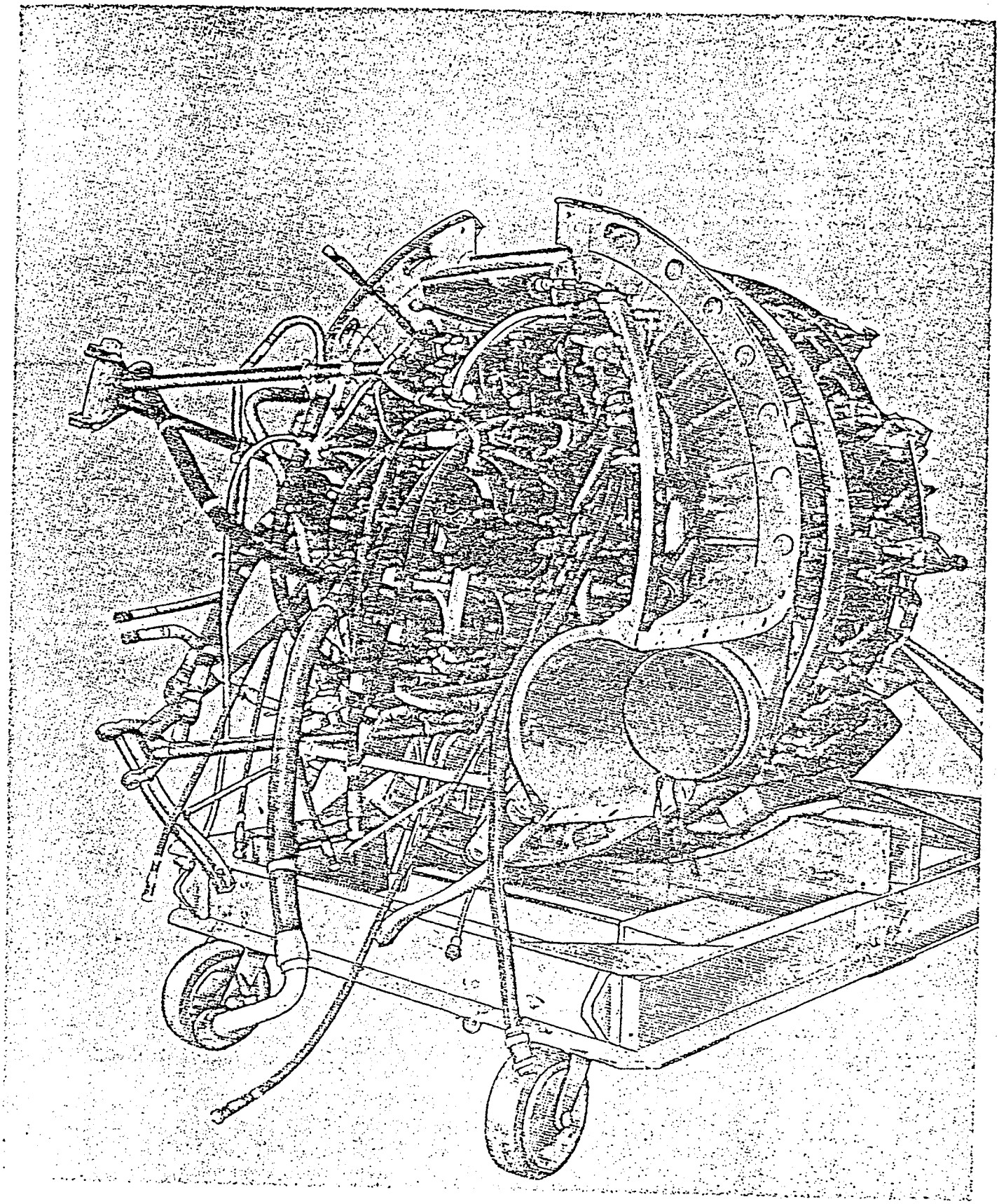

Figure 4-101. Demountable Power Plant, Complete—R-1830-92, Rear Section (Sheet 6 of 6) 33.580

right side of the air intake adapter, above the carburetor.

b. Remove the cap from the fire extinguisher pipe, and connect the metal flexible hose to the pipe and the spray nipple on the air intake adapter.

c. Install the air temperature bulb on the aft side of the air intake adapter.

d. Connect the electrical conduit to the engine section pull box, top outlet, and the air temperature bulb on the aft side of the air intake adapter.

e. Make certain all connections are tight. Secure the hose and conduit using suitable clamps and attachments.

4-305. INSTALLATION OF FUEL PUMP AND FLEXIBLE HOSE.

(See figures 4-99 and 4-101.)

a. Remove the fuel pump mount-pad cover plate and gasket, from the mount-pad located on the lower left side below the oil inlet and outlet ports.

b. Prepare the pump for installation by removing the shipping block from the mount flange, the protek plug from the inlet port, and the plug from the outlet port.

Note

Oil-flushed pumps must be cleaned by flushing with clean unleaded gasoline or naphtha.

c. Check the pump for freedom of operation by turning the shaft with the fingers. If the shaft does not turn freely, jar the assembly very gently on a wooden bench or block.

d. Make certain the mounting surfaces of the pump and engine are clean, and place a new gasket over the mounting studs.

e. Install the fuel pump on the mount pad, with the fuel adjusting screw and the fuel-in and fuel-out 90-degree fittings facing aft, using washers and self-locking nuts.

Note

Before mounting the pump on the engine, note carefully the direction of rotation of the drive gear and the position of the relief valve housing.

f. Connect the fuel inlet hose, fuel pump-to-firewall, to the 90-degree fitting on the left side of the fuel pump. Use an approved antiseize compound on the fuel pump fitting.

g. Connect the fuel outlet hose, fuel pump-to-carburetor, to the 90-degree fitting on the right side of the fuel pump and to the fitting on the carburetor, shown on figure 4-52, item 9. Use an approved antiseize compound on the fuel pump fitting.

h. Secure the hose as necessary, using suitable clamps and attachments.

i. Record fuel pump information on the applicable data sheet.

4-306. INSTALLATION OF HYDRAULIC PUMP AND FLEXIBLE HOSE.

(See figures 4-99 and 4-101.)

a. Remove the hydraulic pump mount-pad cover plate and gasket from the right side of engine No. 1, or from the left side of engine No. 2, located below the tachometer generator.

Note

When installing a new pump, drain the oil from the pump and flush with hydraulic fluid, Specification MIL-O-5606.

b. Check the pump for freedom of operation by turning the drive coupling with the fingers. The coupling tension springs of the bushings cause a close fit on the gears. Do not reject the pump merely because it appears to be too tight.

c. Make certain the mounting surfaces of the pump and engine are clean, and place a new gasket over the mounting studs.

d. Install the hydraulic pump on the mount pad, with the 90-degree fittings facing aft, using washers and castle nut. Tighten the nuts evenly and safety with 0.041 inch wire.

Note

Before mounting the pump on the engine, note carefully the direction of rotation of the engine drive, and make certain it corresponds with the rotation as indicated by markings on the pump.

e. Connect the pump to firewall flexible hose to the 90-degree fittings on the pump.

f. Record hydraulic pump information on the applicable data sheet.

4-307. INSTALLATION OF VACUUM PUMP AND FITTINGS.

(See figures 4-12, 4-99, and 4-101.)

a. Remove the vacuum-pump cover plate and gasket from the engine-mount pad, located on the bottom of the rear section below the generator.

b. Remove the shipping plugs from the two ports. Check the pump for freedom of operation by turning the drive coupling with the fingers.

Note

Pour a small quantity of engine lubricating

e. Install rubber caps or plugs on all pipes that cannot be metal capped.

f. Place dehydrator bags of dehydrating agent, Specification MIL-D-3464, Class 2, in the end of the exhaust tailpipe, and seal the end of the pipe using suitable paper and adhesive tape.

4-317. LUBRICATION OF POWER PLANT AFTER BUILD-UP. In cases where storage of the power plant is expected to extend for 1 month or longer, use the frequency symbols in the applicable lubrication charts as a guide to determine the regularity of corrosion-preventive lubrication.

SECTION V

POWER PLANT CONDITIONING

5-1. POWER PLANT CONDITIONING.

5-2. **GENERAL.** The purpose of this section is to provide ground maintenance personnel with a standard method for performing engine conditioning. The latest approved procedures are given in logical sequence to provide for their systematic application and when achieved, will provide sound engine conditioning to obtain the highest standard of efficiency and operation. Every effort will be made to prolong service life of the engine, eliminate maintenance errors, increase in-commission rate and maintain the highest level of operational readiness. Engine conditioning is divided into two basic types, scheduled and unscheduled. Scheduled engine conditioning will be accomplished at each of the periods specified in the *Inspection Requirements Manual* and will consist of phases outlined in this section. Unscheduled engine conditioning will be held to a minimum by proper maintenance during scheduled conditioning of the engine. However, any time engine malfunction is encountered, the appropriate procedures outlined herein shall be accomplished prior to further engine operation.

Note

The instructions contained herein are for ground maintenance personnel only, and are not to be used by flight personnel to establish preflight or flight procedures.

5-3. ENGINE RATINGS.

a. Rated power. *(See Table 5-1.)*

TABLE 5-1

RATED POWER—R-1830-90C, R-1830-90D, and R-1830-92 ENGINES

Altitude Condition (Feet)	*Bhp*	*Rpm*	*Hg*
Takeoff from sea level to 4800 feet (maximum power).	1200	2700	48 in.

TABLE 5-1 (Continued)

Altitude Condition (Feet)	*Bhp*	*Rpm*	*Hg*
Sea level to 7000 feet (normal rated power).	1050	2550	41 in.
12,500 feet for R-1830-90C with high blower operative (normal rated power).	1000	2500	

b. Engine description.

Type.....2-row, radial, air cooled
Number of cylinders.....14
Bore .....5.5 inches
Stroke .....5.5 inches
Piston displacement .....1830 cubic inches
Compression ratio .....6.70 to 1
Impeller gear ratio .....7.15 to 1
Diameter of impeller .....11 inches
Crankshaft rotation .....Clockwise
Propeller rotation .....Clockwise
Propeller reduction gear ratio.....0.5625 to 1 (16 to 9) spline coupled
Propeller shaft spline size .....SAE No. 50
Diameter of mounting bolt circle .....27 inches
Number of mounting bolts 8
Average dry weight of engine .....1467 pounds
Rotation of magneto drive .....Clockwise
Magneto speed in multiples of crankshaft speed .....0.875 to 1
Spark advance .....25 degrees
Carburetor type.....PS-12H4 (R-1830-92 engines)
PD-12F5 (R-1830-90D engines)
Fuel grade .....Specification MIL-F-5572A, grade 100/130; alternate specification MIL-F-5572A grade 115/145
Oil pump speed in multiples of crankshaft speed .....0.875 to 1

Oil grade ..... Specification MIL-L-22851, grade 1100 (summer), 1100 (winter)

Generator drive .....16 internal inverted splines, 1.40 to 1 clockwise

Starter drive .....3-tooth jaw, 1.00 to 1 clockwise

Fuel pump drive .....11 internal inverted splines, 0.875 to 1 counterclockwise

Tachometer drive .....⅞-inch 18NS-3 coupling, 0.500 to 1 clockwise (right side), counterclockwise (left side)

Vacuum pump drive .....12 internal inverted splines, 1.40 to 1 clockwise

Propeller governor drive .....12 internal inverted splines, 0.958 to 1

c. Power plant operating specifications.

Oil pressure .....65 psi minimum for flight
65 to 110psi normal
110 psi maximum

Oil temperature .....40°C minimum
60°C to 80°C normal
100°C maximum

Fuel pressure ..... 16 psi minimum for flight
16 to 18 psi normal for flight
20 psi maximum

Cylinder head temperature.....150° C to 232° C
Auto Lean permitted
232° C to 270° C
Auto Rich required
270° C maximum

Manifold pressure ..... 28 - 30.5 inches Hg
— A. L. permitted
30.5 - 42-5 inches Hg
— A. R. required
Above 42.5 inches Hg, 5-minute limit — A. R. required.
42.5 In. Hg - METO Power.

Tachometer... 1700 to 2050 RPM - A.L. permitted
2050 to 2550 RPM - A.R. required.

5-4. PREOILING AND DEPRESERVATION.

5-5. GENERAL. The preoiling procedure outlined in paragraph 5-11 is for making the initial engine start on newly installed engines and engines installed in airplanes being removed from temporary and indefinite storage (regardless of time in storage), to prevent hydraulic lock due to the presence of corrosion-preventive compound in the intake pipes which is pulled into the cylinders after the engine has been started, and to avert possible internal gear failures resulting from lack of lubrication.

Note

Accomplish the initial start on newly installed engines as soon as possible, but not later than 4 hours after preoiling has been accomplished. If any period of time in excess of 4 hours has elapsed since the engine was preoiled, accomplish a complete preoiling procedure before attempting the initial engine start.

5-6. Proper preoiling will assure that any air which is present in the internal oil passages will be expelled and that all bearings will be sufficiently lubricated prior to initial engine start. Engines need not be preoiled after an oil change, or after disconnection of the oil system components. However, after oil change or after disconnecting oil system components located in the system between the oil tank and the engine oil pump, disconnect the oil inlet pipe at the pump and drain a sufficient amount of oil from the pipe to determine if there is any obstruction or air in the system.

5-7. PREPARATION FOR PREOILING.

a. Drain the corrosion-preventive compound from the oil tank and fill the tank to a safe level with oil, Specification MIL-L-22851, grade 1100.

b. Provide external electrical power source.

c. Remove one spark plug from each cylinder to reduce the load on the starter.

CAUTION

Take the necessary precautions to prevent the starter from overheating.

d. Place the ignition, fuel, and oil controls in the following positions.

Ignition switch .....OFF
Throttle .....OPEN
Mixture control .....IDLE CUT-OFF
Fuel shutoff valve .....OPEN
Oil shutoff valve .....OPEN

e. Provide a 5-gallon-capacity container to catch the oil that will drain from the sump during the preoiling operation.

f. Remove the plug from the propeller dome and pour a sufficient amount of preoiling lubricant into the dome to bring the lubricant level to the plug hole. Reinstall and safety the plug in the propeller dome.

5-8. EQUIPMENT REQUIRED FOR PREOILING. Pressure tank: Type B-1, Part No. 44G6494 (FSN 4930-509-5796), or Type B-1A, Part No. 47R6303

(FSN 4930-696-3263), or a locally designed or preoiling device. (This does not constitute authority for local manufacture.)

Note

Engines may be preoiled in emergency cases by rotating crankshaft with the starter and utilizing normal engine oil supply and oil pump to provide the pressure, and following the procedures that are applicable for preoiling with pressure equipment.

CAUTION

Devices having heating elements in direct contact with the preoiling mixture or oil will not be used.

5-9. PREOILING LUBRICANT.

a. Use the same grade of oil (1100) as specified for the engine for the preoiling procedures.

b. Provide suitable viscosity by heating and maintaining the lubricant used for preoiling at a temperature between 37.8°C (100°F) and 79.4°C (175°F) when using preoiling equipment incorporating provisions for heating. When preoiling with the engine oil pump or with equipment not incorporating a heating element, dilute the lubricant at a temperature lower than —1.1°C (30°F) with gasoline in accordance with table 5-2, and mix thoroughly prior to preoiling.

TABLE 5-2
DILUTION OF PREOILING LUBRICANT

Temperature	*Percentage of Dilution*
4.4°C (40°F)	0
—12.2°C (10°F)	10
—28.9°C (—20°F)	20
—45.6°C (—50°F)	30

5-10. PREOILING IN COLD CLIMATE. Activities operating in climates where temperatures are below —17.8°C (0°F) will accomplish preoiling indoors, or will accomplish preoiling by applying engine preheat prior to preoiling the engine.

5-11. PREOILING PROCEDURES.

a. Remove the plug from the main oil screen cover.

b. Connect the preoiler to the main oil screen cover with a 1-inch, 18-thread fitting.

c. Place a suitable container beneath the oil sump and remove the oil sump drain plug.

d. Apply 45 to 60 psi pressure with the preoiler.

e. Rotate the engine with the starter until the oil s flowing freely from the sump plug hole, and 45 to 60 psi is indicated on the airplane's oil pressure gage. Reinstall sump plug.

f. Remove rocker box covers from cylinders No. 1 and 14 and check for flow of lubricant. Reinstall rocker box covers after flow of oil is noted.

g. Disconnect the preoiler and install the main oil screen cover plug.

h. Install the spark plugs removed.

i. Service the oil tank.

5-12. DEPRESERVATION RUN. The following instructions, if properly complied with, will eliminate the necessity of removing intake pipes or draining intake pipes prior to installation of the engine on the airplane.

a. Remove one spark plug from each cylinder below the horizontal centerline of the engine.

b. Install a depreservation valve, FSN 4920-326-2633, in each open spark plug hole.

c. Remove the engine cowling.

d. Disconnect both ignition leads on cylinders that have one spark plug removed, and install the metal shipping caps on the ignition terminals.

Note

Metal shipping caps will ground out the ignition, thereby eliminating excessive voltage buildup in the magneto and the possibility of flash-over at the terminal end of the ignition leads.

e. Start the engine and run it at 800 to 1500 rpm for 30 seconds to 1 minute. Accomplish engine operation on either the primer or the carburetor, or both, to obtain the smoothest possible operation. Normally, smoothest engine operation will be obtained at the higher engine speeds, resulting in higher air velocity through the intake pipes.

Note

In cases where extreme cold temperatures exist, preheat the engine prior to starting and allow it to run longer than the 1-minute period, provided excessive vibration is not encountered. Pickling oil, if present in the intake pipes, will have adequate time to be heated and flow from the intake pipes through the external drain, or into the combustion chamber and be expelled into the exhaust system, or through the depreservation valve.

f. Stop the engine by closing the throttle and discontinuing the use of the primer, or by moving the mixture control to the IDLE CUT-OFF position.

g. Install the spark plugs, ignition leads, and cowling.

5-13. OPERATIONAL CHECK OF ENGINE.

5-14. PRESTART. The following will be accomplished prior to the start of the engine.

5-15. ENGINE CONDITIONING ANALYSIS SHEET. Engine instruments and analyzer readings will be recorded on AFTO Form 192, after any engine conditioning maintenance has been performed. The latest recorded AFTO Form will be placed with the DD Form 781 for aircrews to compare with subsequent readings obtained. When a new form is placed with the DD Form 781, the previous one will be removed and placed with the engine conditioning file for the engine involved. If engine conditioning maintenance is performed by a station other than the home station, the AFTO Form will be filled out and placed in the DD Form 781 with the previous one. The responsible engine conditioning crew will remove all but the latest form upon return of the aircraft to the home station. Therefore, the engine conditioning file for each engine at each station will indicate the engine conditioning required and performed on each engine assigned.

5-16. PREPARATION OF ENGINE CONDITIONING ANALYSIS SHEET. The airplane number, engine number, engine time since overhaul, date, wind velocity, static manifold pressure, and the carburetor pressure check must be recorded prior to engine start.

a. Wind velocity — Obtain from the weather station. This information is used to figure the desired rpm for the power check. Head the airplane into the wind and add 2 rpm to the power check rpm for each mph headwind. This will establish desired power check rpm.

b. Static manifold pressure reading — Obtain from the cockpit gages prior to engine start. When making the power check, the operator will advance the throttles until the manifold pressure equals the static reading and will then check for the desired rpm (±50 rpm).

c. Carburetor pressure check — This check will be made prior to engine start in accordance with the instructions given in paragraph 5-18.

d. Blowby and liquid lock checks will be filled out immediately after start.

5-17. CARBURETOR PRESSURE CHECK INFORMATION. When a carburetor is replaced, the new unit must be soaked according to procedures outlined in section IV. After installation, the fuel system should be checked for leaks. These checks should be made prior to making any adjustments. Fuel leaks or pressure drops will affect the metering of the carburetor.

Note

The word "satisfactory" is used in these pressure checking procedures to describe the condition of internal parts of the fuel system and should never be associated with an external leak. Certain checks will specify a certain amount of leakage. This is due to seating tolerances of metal-to-metal parts. During hours of operation, these parts may not form a perfect seal, but will not affect the operation of the carburetor; therefore, a certain amount of leakage is permissible and the parts are considered satisfactory. It is possible for an external leak in the system being checked to produce the same pressure drop as the part being checked. For instance, when checking the fuel discharge nozzle, it is possible for a leaking fuel transfer line gasket to produce the same pressure drop as that allowed for the fuel discharge nozzle; therefore, every precaution should be taken to determine the source of leakage prior to declaring the system serviceable.

5-18. CARBURETOR PRESSURE CHECK. Since there are new PD type carburetors in the system with drilled and undrilled mixture control plates, the following pressure check procedure will be used.

a. With manual mixture control in "Idle-Cut-Off" turn booster pump "On".

b. After pressure has stabilized, move mixture control to "Rich". Allow it to remain in this position for one or two seconds then return it to "Idle-Cut-Off".

c. Close emergency shut-off valve, and then turn booster pump "Off".

d. Observe fuel pressure drop between 14 and 11 pounds.

e. If the drop does not exceed 2 pounds in 15 seconds, the carburetor will be considered serviceable.

f. If the drop exceeds 2 pounds in 15 seconds but holds at discharge nozzle setting (4-5 pounds) and a clean cut-off is experienced during engine operation, the carburetor will also be considered serviceable.

g. If the pressure drops to zero, the carburetor must be checked for external leaks.

h. If no external leaks are noted the following items must be checked:

Emergency shut-off valve.
Vapor eliminators.
Fuel pump.
Oil dilution valve.

i. After the carburetor has been determined satisfactory, open emergency shut-off valve and turn booster pump "On". When pressure stabilizes move mixture control to "Rich" for 1-2 seconds then return it to "Idle-Cut-Off". Close emergency shut-off valve and turn booster pump "Off". As the mixture control is moved out of idle-cut-off position, the pressure should drop to discharge nozzle setting of 4 to 5 pounds. If the pressure drops to zero in less than 2 seconds, visually inspect seal, gasket, and transfer line for leakage. If no leakage is noted, the discharge nozzles assembly is faulty.

Note

After determining the pressure drop does not exceed two pounds in 15 seconds, the discharge nozzle may be checked by moving the mixture control, from "Idle-Cut-Off to "Rich". If the pressure holds at discharge nozzle setting, then there is no requirement to accomplish this paragraph.

5-19. CHECK FOR LIQUID LOCK.

a. Immediately before the start, in order to clear the engine and insure proper lubrication, pull the propeller through 15 blades by continuous use of the starter. Any sign of hesitation shall be cause to suspect liquid lock. If hesitation is noted, release the starter switch immediately. Fifteen blades are required for any start made after two hours or more since shutdown. Eight blades will insure elimination or detection of hydraulic lock on engines started within two hours of last shutdown.

Note

If inertia starters are installed and the engine has been shut down two hours or more, the propeller shall be turned through with the starter. The starter will be used as a direct cranking starter by using the energize and mesh switches simultaneously.

b. If liquid lock is encountered, remove the cowling and remove one spark plug from each cylinder below the horizontal line of the engine and check for presence of liquid. If no liquid is found, remove the remainder of the spark plugs and rotate the propeller a minimum of two complete revolutions in normal direction of rotation and check for liquid spewing from spark plug port. Ascertain that all liquid has been expelled, then reinstall the spark plugs, spark plug leads and the cowling.

WARNING

Do not attempt to relieve liquid lock by reverse rotation of the propeller. This will move liquid from combustion chamber into induction system which could result in partial or complete hydraulic lock at time of subsequent start. If undetected, this may result in immediate or premature failure of engine.

5-20. AUDIBLE BLOWBY CHECK. It is recommended that the right engine be started first. Prior to starting an engine, make a check for audible blowby by stationing a man near the exhaust stack opening to listen for a hissing sound made by air leaking past the exhaust valve seat. If audible blowby is detected, a compression test as outlined in paragraphs 5-45 and 5-46 shall be accomplished.

5-21. **ENGINE START.** Refer to applicable Flight Manual and start engines in strict accordance with procedures contained therein.

CAUTION

If there is a noticeable prevailing wind, head the airplane into the wind whenever possible. Check airplane fire extinguishers for charged condition. Place wheel chocks in position. Post a fire guard with a fire extinguisher at nacelle of engine to be started. Check propeller clearances from work stands, equipment, and personnel. Remove all loose articles from nacelle area, and area in front and to rear of nacelle.

Note

Before starting new engines, newly overhauled engines, or engines in airplanes being removed from storage, refer to paragraphs 5-11 and 5-12.

5-22. WARMUP PROCEDURE.

WARNING

To prevent engine oil starvation due to congealed oil in the engine oil tanks, the procedures for oil preheat and/or oil dilution must be strictly adhered to. Oil in the tank must be heated to −12°C (+10°F) or above before starting engines.

a. As soon as the engine starts and operation is established, oil pressure permitting, adjust throttle to

›proximately 800 rpm. Observe all gages and instru-
ents, such as oil pressure gage, oil temperature gage,
:el pressure gage, and cylinder head temperature gage
› insure proper operation of the engine. If the oil
:essure gage does not indicate pressure immediately
›r normal weather starts or within 30 seconds for cold
eather starts, shut down the engine by placing the
ırburetor mixture control in the IDLE CUT-OFF
osition.

b. After start, oil pressure permitting, adjust the
ırottle to the smoothest engine speed between 1200
nd 1600 rpm.

CAUTION

Minimum oil pressure for the R-1830 engines is 35 psi for 1200 rpm and 10 psi for idle (500 rpm).

Note

On engines equipped with a thermostatic oil-pressure relief valve, the oil pressure will be abnormally high at speeds above 1000 rpm when the oil temperature is below 40°C. Therefore, it will be necessary to start the warmup procedure at an engine speed where the oil pressure does not exceed the maximum pressure. When the oil temperature increases to 50°C, the oil pressure will drop, after which the engine speed may be increased to the smoothest engine speed between 1200 and 1600 rpm.

c. For cold weather engine operation in addition to
he procedures outlined above the following instruc-
ions must also be adhered to: Check form 781
o determine extent of oil dilution. Cold oil properly
'iluted has the same viscosity as hot oil and there-
ore has adequate ability to circulate and lubricate
he engine. However operation below −12°C (−10°F)
equires additional care.

Note

When an engine oil scavenging system or engine breather is inadequate or marginal, over dilution may have an adverse effect and cause a breakdown of the oil scavenging with a resultant discharge of oil from the engine breather system.

Apply external heat to the engines and accessory sections. Preheat the engine nacelle until cylinder head temperatures reach 4°C (40°F). The time requirements listed for warming the aircraft are rough estimates for engine heating at various ambient conditions. These requirements will vary with wind velocity and percent of engine oil dilution. The table listed below is based on an oil dilution of 25% and no wind condition.

−12° to −18°C	(10° to 0°F)	1/2 hr
−18° to −32°C	(0° to −25°F)	1/2 to 1 1/2 hr
−32° to −40°C	(−25° to −40°F)	1 1/2 to 2 1/2 hr

Check the oil drains for oil flow. If no oil flow is obtainable, continue preheat until oil flow is readily obtained.

In addition to external heating oil immersion heaters may be used. However, no special fittings are provided in the oil tanks for immersion heaters on some C-47 airplanes. If the immersion heaters are to be effective in keeping the oil warm during the night, they should be placed in the oil tanks immediately after engine shutdown.

d. Check the cowl flaps for full OPEN position. Cowl flaps may have to be partially closed in cold weather.

e. Observe the instruments to insure proper operation.

f. Continue the warmup until the cylinder head temperatures are up to or near normal, 150°C to 200°C.

5-23. POWER CHECK.

a. Head airplane into the wind whenever possible. Advance throttle to obtain static recorded manifold pressure (field barometric).

b. Check RPM for the following:

(1) In aircraft equipped with paddle propellers, the RPM will vary with the temperature. Correct RPM relative to temperature is depicted in the chart. Additional correction required for the wind velocity.

TEMP vs RPM

CAT°C	MIN	MAX
60° C	2420	2520
50° C	2405	2505
40° C	2390	2490
30° C	2375	2475
20° C	2360	2460
10° C	2345	2445
0° C	2330	2430
−10° C	2315	2415
−20° C	2300	2400
−30° C	2285	2385
−40° C	2270	2370

(2) On aircraft equipped with narrow blade propellers, RPM will be 2350 ± 50 RPM corrected for wind velocity.

c. Note carburetor air temperature and cylinder head temperature.

d. Record power check readings obtained on AFTO Form 192.

Note

When heading into the wind, add approximately 2 rpm for each 1 mile per hour wind velocity, and when tailing into the wind, subtract 2 rpm for each 1 mile per hour wind

velocity. Crosswinds will cause buffeting and rpm surging.

5-24. IGNITION SYSTEM CHECK.

a. Operate the engine at a manifold pressure equal to the static manifold pressure and allow the rpm to stabilize.

b. Move the ignition switch from the BOTH position to the L position. Allow the rpm to stabilize, noting the rpm drop. Note the fast drop, the slow drop, and the total of the two.

c. Move the ignition switch back to the BOTH position and allow the rpm to stabilize.

d. Move the ignition switch to the R position. Allow the rpm to stabilize, noting the rpm drop (fast, slow, and total). Move the ignition switch to the BOTH position.

e. The normal rpm drop is from 30 to 40 rpm. The maximum allowable is 65 rpm.

NOTE

Make the check for each engine as brief as possible (30 seconds maximum). Do not allow the engine cylinder head temperature to exceed 232°C (450° F). Tapping the tachometer rim will eliminate binding of the instrument during this check.

f. The maximum allowable difference between L and R magneto position is 40 rpm.

5-25. PROPELLER CHECK. Operation of the propeller check should be rapid and smooth, indicated by the rpm change during the decrease and the increase operations.

a. With the engines operating at 1700 rpm, move the propeller controls to DECREASE RPM, then to full INCREASE RPM (minimum governing speed is 1200 rpm).

b. With the engines operating at 1700 rpm, push the right side feathering button and wait for 200-rpm drop, then pull out the feathering button (check the ammeter for change during feathering). Check the left side propeller feathering by the same procedure as outlined for the right engine.

c. Check propeller synchronization at a cruise power setting for propeller or governor malfunction.

5-26. STABILITY CHECK.

a. Operate the engine at 1700 rpm with the mixture controls in the AUTO-RICH position.

b. Move the mixture control to the AUTO LEAN position and allow the rpm to stabilize.

c. Note on the sheet the rpm change. The allowable change is 75 rpm decrease or 25 rpm increase.

5-27. IDLE MIXTURE AND SPEED CHECK.

a. Close the throttle and allow the rpm to stabilize (500 rpm).

b. Record the rpm and the manifold pressure.

c. Move the mixture control slowly toward the IDLE CUT-OFF position, (slowly is defined as 10 to 12 seconds from the AUTO-LEAN position to the point at which the maximum rpm change occurs).

d. Note the rpm rise, if any, and record the results. The rpm should rise 10 rpm but should not exceed 10 rpm. If the rpm rise is more than 10 rpm, the mixture is too rich. If less than 10 rpm rise, the mixture is too lean.

5-28. ACCELERATION CHECK.

a. Place the mixture controls in the AUTO-LEAN position.

b. Advance the throttle rapidly, but evenly, to obtain approximately 2200 rpm.

c. Retard the throttle and move the mixture control to the AUTO-RICH position.

d. Advance the throttle rapidly, but evenly, to obtain approximately 2200 rpm. The engine should accelerate evenly with no tendency to cut out or backfire. Record the results.

5-29. FULL THROTTLE CHECK (TAKEOFF POWER).

a. Advance the throttle to the full open position.

b. Note the rpm, manifold pressure, CHT, and CAT. Record these readings on AFTO Form 192.

Note

The takeoff power check must be accomplished after complete or partial engine conditioning and after any major engine component change. This is not to be construed to mean that a takeoff power check will be performed each time the engine is run up.

5-30. IGNITION SWITCH CHECK.

a. Set the throttles at 700 rpm.

b. Turn the ignition switch to the OFF position momentarily, and observe that the engines cease firing.

c. Turn the ignition switch back to the BOTH position.

CAUTION

Leave the ignition switch in the OFF position just long enough to determine that the switch is operating properly. If the ignition switch is left off too long, a backfire will occur when the switch is turned on again.

Paragraphs 5-31 to 5-32

5-31. ENGINE ANALYZER CHECKS.

a. Install and time analyzer equipment to the engine in accordance with paragraph 5-98.

5-32. IGNITION ANALYSIS.

Note

The proper cycle switch dial plate must be installed and SYNCH. SEL. turned to GEN prior to analysis.

a. Adjust the throttle for 1700 rpm with a minimum CHT of 180°C.

b. Place the following switches to the indicated position.

CONDITION to L
MAG. SEL. to 1
SWEEP to NORM

c. Observe each pattern for obvious malfunction.

Note

INTERPRETATION OF IGNITION WAVE FORMS ON THE R-1830 ENGINE USING SF14LN-3 MAGNETOS WITH THE SECONDARY CONDENSERS REMOVED. *(See figure 5-1.)*

In viewing wave forms on the subject ignition system, an unusual condition appears which can cause confusion among operators who are not familiar with them.

It is advisable that the secondary condenser be removed. As soon as this work has been completed and an analyzer has been hooked up to such an installation, the wave forms will appear as noted in Pattern A. It will be noted that the first, third, fifth, etc., wave forms have relatively low initial peaks as compared to the even numbered wave forms. The difference between these wave forms is directly attributable to the operation of this system with the secondary condenser removed. Each of these wave forms should be considered normal. In the case of the number one wave form it can be considered that this is a relatively low energy wave form and the number two wave form could be considered a relatively high energy wave form.

These wave forms are best shown in detail in Pattern B. The low energy wave form is a very normal wave form and should not be considered as having insufficient energy to do the job. It is only low when we compare it with the number two wave form which is a high energy wave form by comparison.

As shown in Pattern A, all the high energy patterns are negative (pointing downward) and all the low energy wave forms are positive (pointing upward). This condition may reverse itself, that is, number one wave form, positive, may suddenly assume the shape of a high energy wave form and likewise number two wave form may assume the shape of a low energy wave form.

It will be noted that regardless of which wave form is of high or low energy configuration, the alternate wave forms will be of the same relative shape. In explaining this condition to an operator one must first emphasize the fact that both of these wave forms are normal for this system and do not require any corrective action. It is true that these wave forms do reflect an unbalanced condition within the magneto, however, this is not due to any malfunction of the components and it does not affect engine operation.

The low energy wave form is a relatively small pattern configuration because prior to the generation of this wave form, negative current was encountered as a result of the previous high energy pattern. This negative current retards the build-up of the field which is needed to produce the spark. As a result the field is a little weaker following the high energy pattern due to this negative current flow.

It will be noted that in the low energy wave form, the voltage drops to zero prior to point closing. This means that there will be no negative current flowing upon point closing and there will be nothing to oppose the normal build-up of primary current resulting in production of a high energy wave form following the low energy wave form. The very high peak in this high energy wave form is a reflection of the charge of the primary condenser due to the very high field strength which is present at the instant of point opening.

The oscillations or "hash" will be plainly observed when this engine is under power. It is suggested that when viewing these wave forms for evaluation of ignition performance on this installation that the operator make certain that at least 30" of manifold pressure is obtained with an RPM of not less than 2000.

It will be noted in the high energy wave form that at the instant of breaker point closing the wave form suddenly goes to

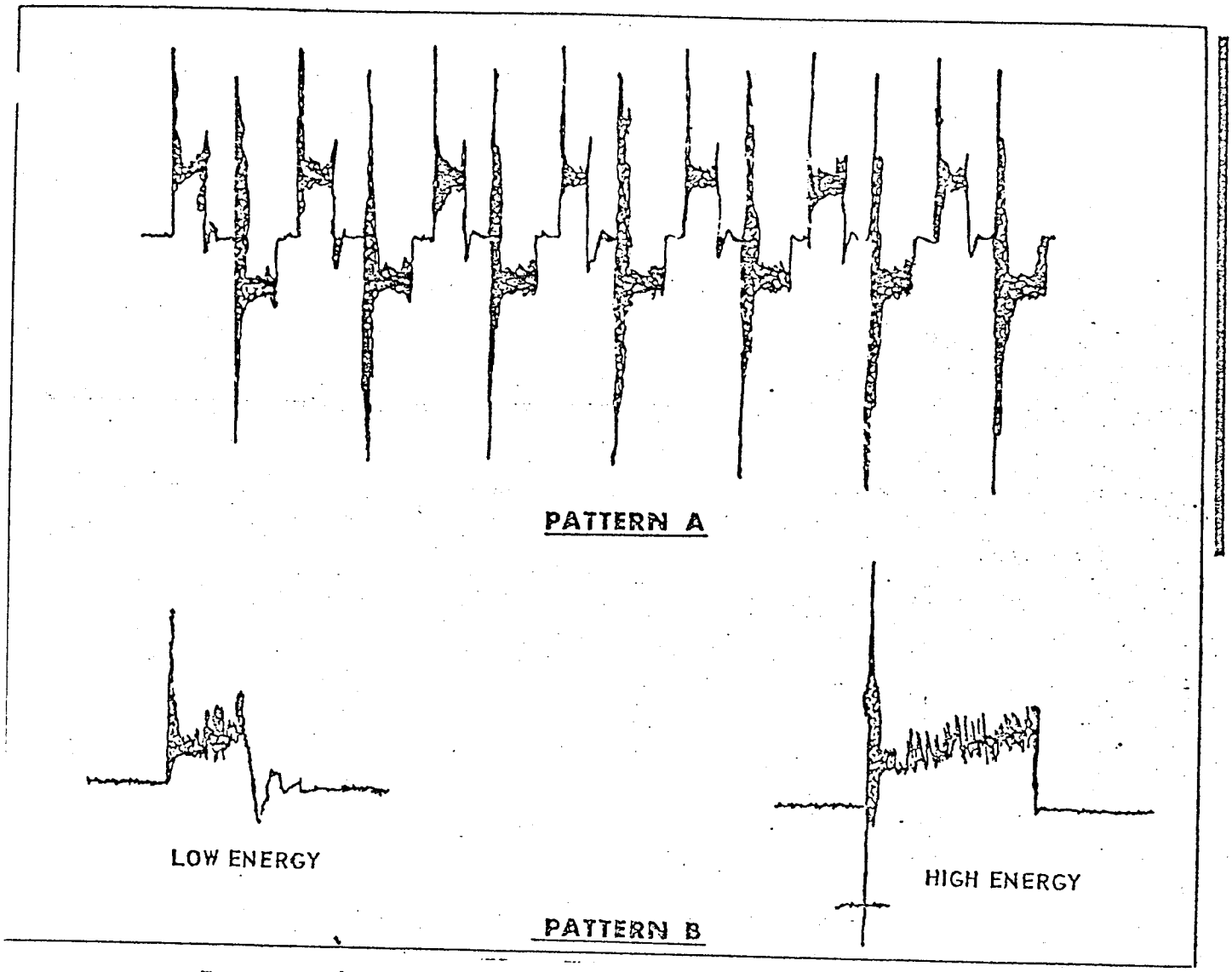

Figure 5-1. Ignition Wave Forms on the R-1830 Engine Using SF14LN-3 Magnetos With the Secondary Condensers Removed

the base line from a fairly high voltage value. This abrupt change from the oscillatory portion of the wave form to the base line indicates that the electro magnetic field has not completely been dissipated at the instant of point closing; therefore, the remaining energy contained in this field will cause primary current flow to occur in the opposite direction to that which is desired for the production of the next spark. Consequently a low energy wave form will follow.

Some operators in the past have requested that the duration of opening of the breaker points be increased to alleviate this condition. This change in handling could be tolerated without any effect whatsoever upon engine performance. However, it is not necessary and is suggested that operators refrain from changing the internal timing of the magneto when these wave forms are encountered.

It will be noted that the variance in these wave forms will in no way affect engine performance. They should therefore be considered as normal wave forms characteristic of this R-1830 ignition system with the secondary condenser removed.

d. Place the condition switch to R.

e. Repeat step c for the right magneto.

f. Place the sweep switch to EXPAND.

g. Observe each pattern by rotating the cycle switch one complete turn clockwise.

Note

Patterns that differ from normal as shown by the majority of the patterns shall be recorded, the cause investigated, and the difficulty corrected. Variations from this procedure are naturally required in some cases.

h. Place the condition switch to L.

i. Repeat step g for the left magneto.

j. Cycle the switch ignition pointer (0°) to the No. 1 cylinder position.

k. Place the condition switch to B.

l. Check breaker point synchronization.

Note

One pattern must be superimposed on the other during this check. A stagger of more than 1 degree (1/32 inch) indicates improper point synchronization. Points found to be out of synchronization must be checked and retimed to the engine.

m. Place the condition switch to L.

n. Measure breaker point dwell for 22 (+1, —2) degrees (2 2/32 inch).

o. Place the condition switch to R.

p. Repeat step n for the right breaker points.

5-33. VIBRATION ANALYSIS.

a. Operate the engine at 1700 rpm with a minimum CHT of 180°C.

b. Place the sweep switch to NORM.

c. Place the vibration pickup selector switch to the No. 1 cylinder position.

d. Observe the pattern from the No. 1 cylinder for obvious malfunction.

e. Observe the patterns from the remaining cylinders by simultaneously rotating the cycle switch and the vibration pickup selector switch one position at a time.

Note

Any malfunction noted that is detrimental to the engine must be corrected prior to further operation of the engine. All patterns that differ from normal, as shown by the majority of the patterns, must be recorded and investigated.

f. Operate the engine at exactly 1700 rpm with the CHT between 215°C and 230°C.

WARNING

Rpm and CHT limits must be strictly adhered to.

g. Place the sweep switch to EXPAND.

h. Install a valve charting card, AFTO Form 70F, on the lower half of the scope with the X side out.

i. Place the ignition reference line on the charting card directly below the long vertical line on the scope and fill in the rpm, CHT, and engine serial number spaces on the card.

j. Place the condition switch to V.

k. Place the vibration pickup selector switch to the No. 1 cylinder position.

l. Cycle the switch exhaust pointer, (red) 420°, to the No. 1 cylinder position.

m. Place a pencil mark on the No. 1 cylinder horizontal line of the charting card directly below the initial high-voltage rise of the vibration pattern. Also, observe the pattern to determine if it is different from normal, as shown by the majority of the patterns.

Note

It must be remembered that each cylinder pattern comes from a different vibration pickup and could vary from pickup output.

n. Chart the remaining exhaust valve closing events by moving the cycle switch exhaust pointer to each cylinder position as each cylinder is selected on the vibration pickup selector switch, and placing the proper colored pencil mark on the respective horizontal line of the valve charting card.

Note

Valve charting colors are: front row, black; rear row, green.

o. The exhaust valve closing events limits are as follows: front row, 18/32 (±6/32) inch to the right of the ignition reference line; rear row, 19/32 (±6/32) inch to the left of the ignition reference line.

p. Remove the valve charting card and install it with the N side out.

q. Place the ignition reference line on the charting card as described in step i.

r. Position the cycle switch intake pointer, (green) 600°, to the No. 1 cylinder position.

s. Position the vibration pickup selector switch to the No. 1 cylinder position.

t. Chart the No. 1 cylinder intake closing event as described in step m.

u. Chart the remaining intake valve closing events as described in step n.

v. The intake valve closing event limits are as follows: front row, 69/32 (±6/32) inch to the right of the ignition reference line; rear row, 50/32 (±6/32) inch to the right of the ignition reference line.

Note

All valves not closing in the specified limits will be checked for proper cold clearance and adjusted if necessary. Any time more than

40 percent of the valves actuated by any one cam track are out of limits, all valves actuated by that cam track will be checked and adjusted as necessary. Valve clearances will not be checked or adjusted while the engine is hot. The engine will be allowed to cool a minimum of 2 hours. Only the procedures specified in this manual will be used for checking or adjusting valve clearances. Those valves that do not fall in the specified limits that are checked and found to have correct clearance will be inspected and the reason determined for their improper operation. High CHT on a particular cylinder will move the pattern to the left while a cool or cold cylinder will move to the right of the specified limit. Improper cooling or lubrication can and usually does cause improper valve operation for the affected cylinder or cylinders.

5-34. ENGINE SHUTDOWN.

a. Parking brakes — Set.

b. Throttles — 1200 rpm.

c. Oil dilution — As required.

d. Inverters — OFF.

e. Place engine mixture control lever to IDLE CUT-OFF; when engine stops rotating, turn ignition switch to OFF.

f. Repeat procedure for other engine.

5-35. SYSTEM ANALYSIS.

5-36. USE OF ENGINE CONDITIONING ANALYSIS SHEET. AFTO Form 192 adequately provides the information required. A brief summary of the use of each item on the list is given in an attempt to preclude any confusion on the part of the user.

a. Wind velocity — Used in determining desired power check rpm. Add 2 rpm to basic power check rpm for each mph headwind, or subtract 2 rpm for each mph tailwind. Tailing into wind is not recommended.

b. Static manifold pressure reading — Use the reading on the gage before engine start. Engines will be run to this figure at power check of the engine.

TABLE 5-3
ENGINE DISCREPANCY ANALYSIS LIST

PROBABLE CAUSE	ISOLATION PROCEDURE	REMEDY
	ENGINE FAILS TO START.	
Incorrect ignition timing.	Check ignition timing.	Retime ignition.
Dirty or glazed contact points.	Check points for glazing or pitting.	Clean points or replace magneto.
Primer defective.	Remove primer line and check for proper operation.	Repair or replace primer.
Inoperative starting vibrator.	Check for buzzing sound from vibrator when it is engaged. Check for proper voltage to vibrator.	Repair or replace vibrator.
	LOW OIL PRESSURE.	
Excessive oil dilution.	Check excessively thin oil and fuel vapor.	Replace defective valve, or correct oil dilution procedure.
Clogged oil screen.	Remove main oil screen and check for carbon and sludge.	Install clean oil screen.
Aerated oil supply.	Check oil in tank for foaming.	Bleed oil system of all air and replenish oil supply.
Malfunctioning oil pump.	Take direct reading of oil pressure at pump for proper output pressure.	If defective, replace pump, or adjust as required.

TABLE 5-3 (Continued)

PROBABLE CAUSE	ISOLATION PROCEDURE	REMEDY
	LOW OIL PRESSURE. *(Continued)*	
Engine oil supply pipe clogged.	Disconnect engine oil supply pipe and check for foreign material or air lock.	Remove foreign material or bleed air from pipe.
Improper setting of oil pressure relief valve.	Check adjustment of oil pressure relief valve.	Readjust relief valve.
High oil temperature.	Check oil cooler for clogging and viscosity valve for operation.	Repair malfunctioning part of oil system such as oil cooler door or oil cooler regulator.
Inadequate oil supply.	Check oil quantity in engine oil tank.	Replenish oil supply.
Defective oil gage.	Check instrument for proper operation.	Replace defective gage.
Broken or loose connections in oil piping.	Check piping for leaks.	Repair or replace as necessary.
Partially closed engine oil shutoff valve.	Check valve.	Open valve.
	HIGH OIL PRESSURE.	
Improper adjustment of oil pressure relief valve.	Check adjustment of oil pressure relief valve.	Adjust relief valve.
Defective oil pressure transmitter or gage.	Check transmitter and gage for proper operation.	Repair or replace as necessary.
	FLUCTUATING OIL PRESSURE.	
Insufficient oil supply.	Check oil level in tank.	Replenish oil in tank.
Airlock in oil system.	Disconnect pipe at gage and pressure side of pump. Apply pressure source to pipe at gage end, and bleed piping.	Connect pipe at gage. Apply pressure source at pump and check gage for proper operation.
Hopper in oil tank not modified.	Check for modification.	Replace with modified tank.
	ENGINE BACKFIRES.	
Improper magneto-to-engine timing.	Check magneto-to-engine timing.	Retime magneto to engine.
Air leaking into induction system.	Check under MIXTURE TOO LEAN in this chart.	Repair or replace as necessary.
Insufficient fuel pressure.	Check for correct fuel pressure from boost pump.	Adjust fuel pressure as necessary.

TABLE 5-3 (Continued)

PROBABLE CAUSE	ISOLATION PROCEDURE	REMEDY
	ENGINE BACKFIRES. *(Continued)*	
Carburetor poppet valve binding.	Check poppet valve operation.	Replace carburetor.
Defective spark plugs.	Perform analyzer check.	Replace defective spark plugs.
Defective ignition harness or high-tension leads.	Perform analyzer or harness check.	Repair or replace as necessary.
Improper starting procedure.	Check starting procedure.	
Airlock in the carburetor.	Check under MIXTURE TOO LEAN in this chart.	
Improper valve clearance.	Perform vibration analysis.	Adjust valves shown to be out of adjustment.
Sticking valves or broken valve springs.	Perform analyzer check.	Repair as necessary.
Corrosion from moisture in magneto.	Inspect magneto points.	Clean points or replace magneto.
Vapor eliminator float stuck open.	Check under MIXTURE TOO LEAN in this chart.	
	SLOW OIL PRESSURE RISE ON GAGE.	
Congealed oil.	Disconnect pump inlet pipe. Check for flow and proper oil viscosity.	Warm oil supply.
Defective gage.	Bench-check gage. Flush gage lines to engine.	Replace gage.
Oil temperature too high.		Refer to HIGH OIL TEMPERATURE in this chart.
Oil pressure too high.		Refer to HIGH OIL PRESSURE in this chart.
Leaks in system.	Visually check system and external oil hose connections for leaks.	Tighten, repair, or replace as required.
Oil viscosity too low.	Examine oil and check oil dilution solenoid for leaks.	Fill tank with proper grade of oil. Replace dilution solenoid valve.
Clogged breather pipes.	Check breather pipes for proper operation.	Clean breather pipes.
Engine components out of tolerance.	Check engine wear limits.	Replace engine.

TABLE 5-3 (Continued)

PROBABLE CAUSE	ISOLATION PROCEDURE	REMEDY
	NO OIL PRESSURE.	
Defective gage.	Install gage of known accuracy. Oil pressure must be supplied from source other than engine-driven pump.	Replace gage if necessary.
Damaged oil intake pipes or gage pipes.	Visually inspect all oil piping for damage or dirt.	Repair or replace as necessary.
Airlock in oil system.	Disconnect pump inlet pipe and check for free oil flow.	Bleed system.
Defective pump.	Remove pump from engine. Return pump to field maintenance shop for test.	Replace pump.
Oil supply depleted.	Check gage for proper oil level.	Replenish oil supply.
	HIGH OIL TEMPERATURE.	
Inadequate oil supply.	Check oil tank for proper oil level.	Replenish oil in tank.
Diluted or contaminated oil.	Examine oil for excessive diluents or dirt.	Drain engine and tank. Refill with proper grade of oil.
Obstructions in main oil tank.	Examine oil tank for obstructions.	Drain oil. Clean or repair oil tank.
Broken oil lines, loose connections, or leaks.	Visually inspect all components.	Replace broken lines, tighten connections, repair leaks, and install new items as required.
Obstructions in oil cooler.	Check oil cooler for proper oil flow.	Flush or replace as necessary.
Clogged oil strainer.	Inspect strainer.	Clean as required.
Leaking oil dilution valve.	Disconnect oil dilution line and actuate solenoid; check valve shutoff.	Repair or replace as necessary.
Viscosity valve inoperative.	Check viscosity valve for operation.	Replace viscosity valve.
	LOW OIL TEMPERATURE.	
Bypass valve not functioning properly.	Check valve operation by circulating hot and cold oil.	Replace defective valve.
Defective oil temperature indicating system.	Install gage and resistance bulb of known accuracy.	Replace indicator and bulb as necessary.

TABLE 5-3 (Continued)

PROBABLE CAUSE	ISOLATION PROCEDURE	REMEDY
	ROUGH ENGINE OPERATION.	
Incorrect fuel-air ratio.	Perform stability check.	Check under MIXTURE TOO LEAN or MIXTURE TOO RICH in this chart.
Loose engine mount.	Inspect mounts (vibration isolators).	Replace defective mounts.
Loose propeller shaft nut.	Check nut for proper torque.	Retorque nut.
Propeller out of balance or track.	Check propeller for proper track and balance.	Replace as necessary.
Defective spark plugs.	Perform analyzer check.	Replace defective spark plugs.
Sticking valves or broken valve springs.	Perform analyzer check.	Repair as necessary.
Defective ignition system.	Perform analyzer check.	Repair or adjust as necessary.
Improper valve clearance.	Perform analyzer check.	Adjust as necessary.
	ENGINE SMOKING EXCESSIVELY.	
Clogged rocker-box interconnector.	Check interconnector of smoking cylinder.	Remove sludge from interconnector.
Clogged tappet drain.	Inspect rocker box for excessive oil.	Clean tappet drain with compressed air.
Defective piston and/or piston rings.	Perform compression check.	Replace cylinder assembly.
Impeller oil seal leaking.	Check induction system for excessive oil. Note There must be enough oil in induction system to consistently foul spark plugs before replacing the engine.	Replace engine.
Excessively worn valve guides.	Perform vibration analysis and if pattern is not normal for that valve, remove exhaust stack and check for oil seepage around valve stem.	Replace cylinder.
Defective oil scavenge pump.	Inspect sump for excessive oil. Check for oil spewing from breather.	Replace pump.

TABLE 5-3 (Continued)

PROBABLE CAUSE	ISOLATION PROCEDURE	REMEDY
ENGINE SMOKING EXCESSIVELY. *(Continued)*		
Defective primer.	Check under MIXTURE TOO RICH in this chart.	
Defective spark plugs.	Perform analyzer check.	Replace defective spark plugs.
EXCESSIVE RPM DROP ON ONE SIDE DURING IGNITION SYSTEM CHECK.		
Magneto incorrectly timed to engine.	Slow rpm drop noted during ignition system check, and excessive manifold pressure during power check.	Time magneto.
Defective ignition harness.	Perform ignition analyzer check.	Repair or replace as necessary.
Moisture in magneto	Excessive rpm drop with possible backfiring.	Clean or replace magneto as necessary.
Defective primary condenser.	Perform analyzer check.	Replace condenser at base shops level.
Dirty or burned breaker points.	Arcing breaker points will be noted on analyzer check.	Clean points or replace magneto.
Defective ignition switch.	Perform continuity check with switch in ON or OFF position.	Replace defective switch.
Faulty starting coil or vibrator.	Check for operation during start by watching analyzer scope for indication of coil or vibrator operation.	Replace coil or vibrator if defective.
EXCESSIVE RPM DROP ON BOTH SIDES DURING IGNITION SYSTEM CHECK.		
	Note In addition to procedures which follow, all preceding procedures also apply to this malfunction.	
Incorrect valve clearance.	Perform vibration analysis.	Adjust valves.
Incorrect fuel-air ratio.	Perform stability check.	Repair as necessary.
NO RPM DROP DURING IGNITION SYSTEM CHECK.		
Open P lead.	Perform magneto grounding check.	Repair as necessary.
Defective tachometer.	Tap rim of tachometer during ignition check.	Replace tachometer.
Advance magneto-to-engine timing.	Check magneto timing.	Time as necessary.

TABLE 5-3 (Continued)

PROBABLE CAUSE	ISOLATION PROCEDURE	REMEDY
	OIL SPEWING FROM BREATHER.	
Defective piston or piston rings.	Perform compression check.	Replace defective cylinder assembly.
Improper grade of oil in tank.	Check oil in tank for proper grade.	Service oil tank with proper grade of oil.
Excessive oil dilution.	Check oil for excessively thin oil and fuel vapors.	Drain and service oil tank.
Malfunctioning scavenge pump.	Check for excessive oil in sump. Oil quantity will reduce rapidly.	Replace scavenge pump.
High oil temperature.	Check oil in tank for foaming, oil cooler clogged, oil cooler door malfunctioning.	Repair malfunctioning part of oil cooler system.
	LOW POWER.	
Air leak in induction system.	Check induction system for leaks. Perform stability check.	Repair as necessary.
Defective spark plugs.	Perform analyzer check.	Replace defective spark plugs.
Low compression.	Perform compression check.	Replace defective cylinder or cylinders.
Incorrect ignition timing.	Slow rpm drop will be noted during ignition system check.	Retime magneto.
Improper grade of fuel (low).	Check fuel for proper grade.	Service fuel system.
Improper valve clearance.	Perform vibration analysis.	Readjust valves found to be improperly set.
Defective cylinders.	Perform compression check.	Replace defective cylinder assemblies.
Defective instruments.	Have instruments checked.	Replace as necessary.
Malfunctioning supercharger impeller.	Flush impeller section.	
Defective ignition system.	Perform ignition system check.	Repair as necessary.
	OVERHEATING.	
Improper valve clearance.	Perform engine analyzer check.	Adjust valves as necessary.
Burned valve.	Perform compression check.	Replace defective cylinder.

TABLE 5-3 (Continued)

PROBABLE CAUSE	ISOLATION PROCEDURE	REMEDY
	OVERHEATING *(Continued)*.	
Advanced ignition timing.	Low manifold pressure at power check rpm.	Retime magneto.
High CAT.	Check carburetor air inlet system.	Repair or replace malfunctioning parts.
Defective ignition system.	Perform ignition system or analyzer check.	Repair or adjust as necessary.
Clogged oil cooler.	Inspect oil cooler and regulator.	Repair or replace as necessary.
Malfunctioning oil temperature regulator unit.	Inspect regulator unit.	Repair or replace as necessary.
Insufficient oil supply.	Check oil level in tank.	Reservice oil system.
Improper grade of oil.	Check for proper grade oil.	Service with proper grade oil.
Air leak into induction system.	Check under MIXTURE TOO LEAN in this chart.	Repair leaks.
Excessive oil dilution.	Check oil for excessive diluent. Inspect oil dilution system.	Repair or replace faulty parts of oil dilution system.
Clogged main oil screen.	Check for low oil pressure.	Clean or replace screen.
Improperly adjusted cowl flaps.	Check rigging of cowl flaps.	Adjust as necessary.
Thermocouple lead defective, or leads crossed.	Check leads.	Repair as necessary.
Lean mixture.	Check under MIXTURE TOO LEAN in this chart.	Correct as necessary.
Engine-mount bonding loose.	Check bonding terminal for cleanliness and security.	Correct as necessary.
	Note If all foregoing procedures fail, the following rework may be accomplished: Remove the forward fire detector bow ring. On the left hand engine bow ring, connect the terminal end of the disconnected bow ring wire 1W36A16 to 1W29A16 using a screw, washer and nut.	
	SURGING RPM.	
Defective propeller governor.	Propeller will cause surge in rpm at takeoff.	Repair or replace as necessary.
Defective tachometer generator or instrument.	Check instrument and generator for proper operation.	Repair or replace as necessary.

TABLE 5-3 (Continued)

PROBABLE CAUSE	ISOLATION PROCEDURE	REMEDY
	MIXTURE TOO LEAN.	
Faulty AMC unit.	Perform cruise mixture check.	Replace AMC unit.
Induction leak.	Check for fuel stains.	Repair as necessary.
Leaking vapor eliminator.	Pressure check carburetor.	Replace vapor eliminator float or seat.
Air leak between carburetor and mounting case.	Engine rough at low rpm.	Install gasket between carburetor and mounting case.
Dirty booster venturi.	Low fuel flow. Inspect booster venturi.	Clean venturi.
Discharge nozzle binding or sticking.	Pressure-check carburetor.	Repair or replace.
Improper idle mixture adjustment.	Check idle mixture.	Adjust as necessary.
Improper valve clearance.	Perform vibration analysis.	Adjust valves having incorrect clearance.
	MIXTURE TOO RICH.	
Leaking primer.	Check primer.	Repair or replace primer.
Idle mixture too rich.	Check idle mixture.	Adjust idle mixture.
Excessive fuel pressure.	Check for proper pressure.	Adjust pressure.
Leaking O-ring in AMC or faulty AMC.	Rich mixture at altitude.	Replace AMC or O-ring.
	IMPROPER ACCELERATION.	
Incorrect idle mixture adjustment.	Check idle mixture.	Adjust idle mixture.
Defective spark plugs.	Perform analyzer check.	Replace defective plugs.
Defective ignition system.	Perform engine analyzer check.	Repair or adjust as necessary.
Incorrect throttle or mixture linkage.	Inspect linkage.	Repair or adjust as necessary.
Defective primer.	Perform primer check.	Repair as necessary.
Low compression.	Check compression.	Replace defective cylinder(s).
Airleak in induction system.	Check induction system for leaks.	Repair leaks.

TABLE 5-3 (Continued)

PROBABLE CAUSE	ISOLATION PROCEDURE	REMEDY
	IMPROPER ACCELERATION. *(Continued)*	
Blower drain valve stuck open.	Inspect valve.	Replace defective valve.
	ENGINE WILL NOT IDLE PROPERLY.	
Incorrect idle adjustments.	Check idle mixture.	Adjust idle mixture.
Leaking primer.	Check primer.	Repair or replace as necessary.
Air leak in induction system.	Check induction system for leaks.	Correct leaks.
Malfunctioning valves.	Perform vibration analysis.	Repair or adjust as necessary.
Faulty discharge nozzle.	Pressure check carburetor.	Repair or replace as necessary.
Defective spark plugs.	Perform analyzer check.	Replace faulty spark plugs.
Magneto-to-engine timing incorrect.	Check magneto timing.	Retime magneto.
Leaking fuel booster pump check valve.	Check fuel booster pump.	Repair as necessary.
	ENGINE TORCHING.	
Malfunctioning valves.	Perform vibration analysis.	Replace or adjust as necessary.
Magneto-to-engine timing incorrect.	Check magneto timing.	Retime magneto.
Rich mixture.	Perform idle mixture check.	Repair or adjust as necessary.
Defective ignition system.	Perform ignition analyzer check.	Repair or adjust as necessary.
Primer leaking.	Check primer.	Repair or replace as necessary.
Faulty poppet valve assembly.	Perform stability check.	Change carburetor.
	ENGINE FAILS TO STOP.	
Leaking fuel fill valve.	Pressure check carburetor.	Replace valve.
Leaking manual mixture control.	Pressure check carburetor.	Repair or replace as necessary.
Leaking primer.	Check primer.	Replace or repair primer.
Mixture control rigging improper.	Inspect rigging.	Adjust as necessary.

TABLE 5-4
TROUBLE SHOOTING - IGNITION SYSTEM

TROUBLE	PROBABLE CAUSE	REMEDY
a. Engine fails to start.	Loose or defective spark plugs.	Clean and gap, or replace spark plugs; torque.
	Defective harness or leads (moisture, damaged insulation, open circuit; dirty or cracked ceramic insulators).	Check harness for continuity, high voltage breakdown; clean or replace ceramic insulators.
	Defective switch or wiring.	Replace switch; isolate and repair wiring.
	Moisture in magneto or distributor block, dirty breaker points.	Dry and clean with naphtha or unleaded gasoline; replace, if required.
	Internal magneto troubles (no spark or weak spark across ¼-inch gap at spark plug lead to ground).	Replace magneto.
	Inoperative induction vibrator.	Replace if vibrator does not buzz when MESH switch is ON.
b. Engine runs roughly, erratically.	Loose or defective spark plugs.	Clean and gap, or replace spark plugs; torque.
	Defective harness or leads.	Isolate and repair.
	Moisture in magneto or distributor block, dirty or pitted breaker points.	Dry and clean, or replace magneto or distributor block.
	Internal magneto troubles.	Replace magneto.
	Incorrect magneto timing.	Time magneto.
c. Engine develops low power.	Loose or defective spark plugs.	Clean and gap, or replace spark plugs; torque.
	Defective magneto timing.	Time magneto.
d. Engine idles improperly.	Loose or defective spark plugs.	Clean and gap, or replace spark plugs; torque.
	Defective harness or leads.	Isolate and repair.
e. Dead magneto.	Defective magneto (broken breaker points, faulty capacitor, coil faulty, primary circuit shorted).	Replace magneto.
	Ignition switch circuit (P lead) grounded, or switch incorrectly connected.	Isolate and repair.

c. Carburetor pressure check — Used to determine that carburetor does not have internal or external leaks.

d. Blowby check — Used to determine that cylinders do not have a compression leak that can be heard at time of engine pull-through.

e. Liquid lock check — Made to determine if there is insufficient liquid in the combustion chambers to cause a liquid lock.

f. Warmup and related instrument readings — Used to determine engine temperature and pressure at/or about minimum prior to the runup of the engine.

g. Ignition system check — Used to determine if ignition system and other related factors are functioning properly.

h. Fast and slow rpm drop — Used to help determine the cause for rpm drop. In most cases fast rpm drop is caused by fouled spark plugs, defective leads, or dirty magneto blocks. Slow rpm drop is usually the result of improperly timed magneto, improper valve clearance, or excessively rich mixture.

i. Total rpm drop — Used to determine if an engine is acceptable.

j. Power check — Used to determine if an engine is developing an acceptable power. Desired rpm is the basic rpm corrected for wind. For example, if the wind is 10 mph and the basic power check rpm is 2100, the desired rpm would be 2120. Rpm obtained is self explanatory, but must be within 50 rpm of desired or the engine is not acceptable. The remaining readings are taken to determine if they are normal.

k. Stability check — Used to determine the stability of engine operation and all related factors such as mixture, ignition, valves, etc. Rpm in auto-rich is 1700, and rpm in auto-lean will be the rpm obtained upon moving the mixture control to auto-lean.

l. Idle mixture and speed checks are made to determine that the engine is receiving correct fuel air ratio at idle and the rpm is correct.

m. Acceleration check — Made to determine if the engine will accelerate smoothly and rapidly with no tendency to backfire.

n. Takeoff power check — Made to determine if the engine will develop takeoff power, and also if instrument readings for takeoff power are within limits.

o. Engine analyzer check — Used to determine if ignition system, valve system, and cylinder are functioning properly.

p. By analyzing each figure obtained on each check outlined on the analysis sheet it can be relatively easy to determine the condition of an engine and the preventive maintenance required.

5-37. ENGINE DISCREPANCY ANALYSIS LIST. (See table 5-3.)

5-38. ENGINE CONDITIONING MAINTENANCE.

5-39. ENGINE OIL SYSTEM MAINTENANCE. To eliminate possible internal failure of the working parts of the engine, use only the oil specification and grade specified for the R-1830 engine. In addition, it is essential that the engine oil system is operating properly at all times if the optimum engine life is to be obtained. This includes the proper operation of the oil pump, oil cooler, and oil strainer, and the prevention of dirt, abrasives, or other particles entering the oil system either by contamination of the oil, by use of dirty oil containers or servicing equipment, or by faulty material entering through openings in the engine or oil system.

CAUTION

Airplanes that have engine oil systems serviced with corrosion-preventive compound, Specification MIL-C-6529, are not suitable for preflight or flight operation.

5-40. CYLINDER MAINTENANCE.

5-41. CYLINDER COMPRESSION TEST.

5-42. GENERAL DESCRIPTION. The cylinder compression test is basically a maintenance preventive test, and is used to prevent cylinder or engine failures. The replacement of defective cylinders discovered by this test will prevent a more serious malfunction due to progression of the defect, and will eliminate cylinder or engine failure due to conditions outlined in the following paragraphs.

5-43. TEST EQUIPMENT REQUIRED. *(See table 5-5.)*

TABLE 5-5
TEST EQUIPMENT REQUIRED - CYLINDER COMPRESSION

Figure No.	*Name*	*FSN*	*Use*
5-2	Cylinder compression tester assembly.	4910-221-1783	Cylinder compression test.

5-44. OPERATIONAL CHECK OF TYPE S-1 COMPRESSION TESTER. *(See figure 5-2.)* To insure the most effective test of compression and eliminate the possibility of removing cylinders which are not defective, the compression tester will be checked in the following manner prior to accomplishing a compression test on the engine. Testers which do not meet the following requirements will be returned to the overhaul depot for repair.

a. With the air inlet hose connected to the tester and an air supply of 100 to 150 psi available, disconnect the spark plug bushing adapter from the tester-to-cylinder line.

b. Adjust the regulated pressure to obtain 80 psi.

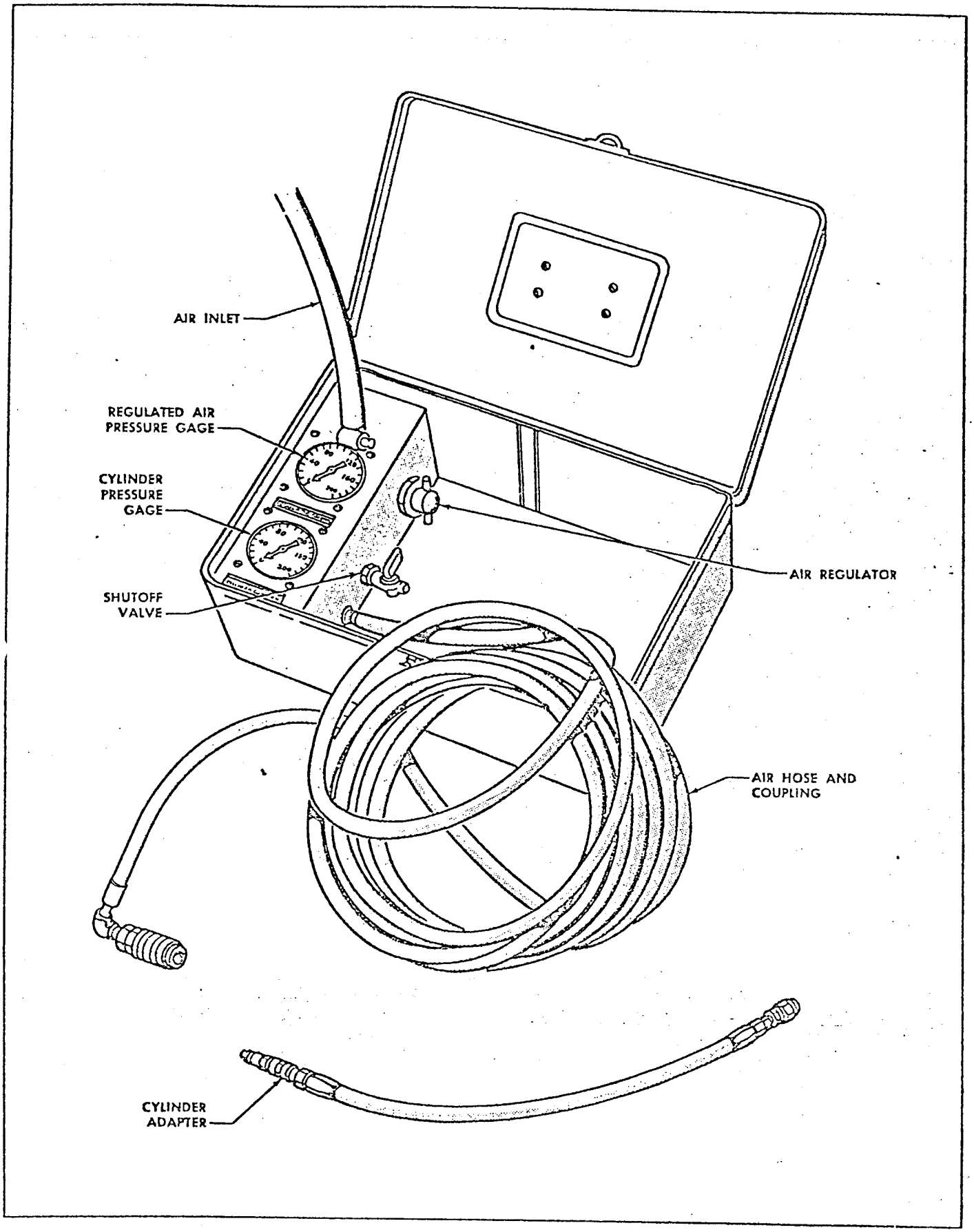

Figure 5-2. Type S-1 Engine Cylinder Compression Tester

33,617

c. With the shutoff valve closed and with 80 psi registering on the regulated gage, the cylinder pressure gage must indicate 80 psi.

d. Open the shutoff valve. The cylinder pressure gage must drop to between 15 and 20 psi.

e. Close the shutoff valve and connect the spark plug bushing adapter to the outlet line from the tester. The cylinder pressure gage must indicate 5 psi or less, while maintaining 80 psi on the regulated gage.

Note

If more than 5 psi is obtained in step e, the presence of a restriction in the line should be investigated before the tester is returned to an overhaul base.

5-45. COMPRESSION CHECK PROCEDURE (TYPE S-1 COMPRESSION TESTER). Perform the cylinder compression test as described in the following steps.

a. The compression test shall be accomplished immediately after engine shutdown. If the compression test is to be accomplished during engine buildup or on an individually installed cylinder, it will be necessary to lubricate the cylinders by use of a squirt can using lubricating oil. The engine must be turned over several times to seal the piston rings.

b. Take the standard precautions against accidental firing of the engine.

c. Remove the necessary cowling.

d. Remove the most accessible spark plug from each cylinder.

e. Install the spark plug bushing adapter and the seal ring in the No. 1 cylinder spark plug bushing. Tighten the spark plug bushing adapter sufficiently to insure a seal.

f. Connect the compression tester assembly to the compressed air supply. With the shutoff valve closed, adjust the main line pressure from the compressor to 80 psi on the regulated pressure gage.

g. Open the shutoff valve and attach the air hose quick-disconnect fitting to the spark plug bushing adapter. This will establish a pressure of 15 to 20 psi in the cylinder, if both the intake valve and the exhaust valve are closed and if the cylinder will hold 15 to 20 psi air pressure.

h. Turn the crankshaft in the direction of rotation by hand, until the piston in the No. 1 cylinder is coming up on the compression stroke against the 15 to 20 psi air pressure in the cylinder. Continue slowly turning until the piston reaches top dead center, which will be indicated by the sudden decrease in force necessary to turn the crankshaft. If the crankshaft is rotated too far, back up at least one-half revolution and start over, eliminating the valve backlash, and keeping the rings seated in the lower ring lands.

i. Close the shutoff valve. Check the regulated pressure and adjust, if necessary, to maintain 80 psi on the regulated gage.

CAUTION

Care must be taken to prevent rotation of the crankshaft when the shutoff valve is closed, as the air pressure in the cylinder may be sufficient to cause as much as a half-turn in the shaft.

j. With the regulated pressure adjusted to 80 psi, the cylinder pressure gage should not read lower than 35 psi. Proceed with the next cylinder.

k. When all the cylinders have been checked and the readings recorded, return to the cylinder or cylinders having low compression readings. See the special instructions in paragraph 5-46 for the action to be taken for cylinders having a low compression reading.

l. If, after following the procedure described in step k, the cylinder or cylinders do not meet the minimum requirements specified, the cylinder or cylinders will be replaced.

5-46. SPECIAL INSTRUCTIONS. The following procedures must be used on engines having cylinders with compression values below the minimum required, and the compression rechecked prior to replacing the cylinders. The following sequence is not mandatory. Valves must not be checked for negative clearance nor adjusted immediately after the engine has been operated.

a. Remove the rocker box covers on the cylinders with low compression readings. Turn the crankshaft until the piston is on top dead center of the compression stroke. Check the intake and the exhaust valves for negative clearance. If the valves are found to be open, they will be adjusted in accordance with paragraph 5-97.

b. With the rocker box covers removed, rotate the crank shaft until each valve is closed, and the piston is at least 2 inches from the top dead center position. Place a fiber drift on the rocker arm directly over the valve stem and tap the drift with a 1- or 2-pound hammer. Rotate the crankshaft a minimum of eight revolutions to seat the valve in a normal manner.

c. On all cylinders above or on the horizontal line of the engine, squirt a small quantity of oil into the cylinders. Rotate the crankshaft a minimum of eight revolutions.

d. Start the engine and operate at a power check and manifold pressure for a minimum of 2 minutes.

Shut down the engine and check the compression as soon as possible.

5-47. When the procedures described in paragraph 5-46 are used to obtain the proper compression of any cylinder or cylinders, the proper entry will be made on the compression check sheet, AFTO Form 34. A diagonal line will be drawn through the applicable block, and the first reading obtained will be entered in the upper left corner of the block. After compliance with the instructions in paragraph 5-46, the final figure will be entered in the lower right corner of the block. An entry will also be made on the compression check sheet, indicating the action taken to raise the compression. At any time a new cylinder is installed on an engine, a compression check must be made of the newly installed cylinder, an entry made of the pressure obtained, and the location of the new cylinder noted.

5-48. CYLINDER REPLACEMENT. The entire engine will be removed if the low-compression cylinders exceed the values in table 5-6.

TABLE 5-6
LOW-COMPRESSION CYLINDER VALUES

Up to ½ Engine Life	*From ½ to ¾ Engine Life*	*From ¾ to Maximum Engine Life*
14 cylinders	7 cylinders	3 cylinders

Note

In some cases it may be more economical to remove the engine and have the cylinders replaced in the engine shop.

5-49. INSTALLATION OF IGNITION HARNESS. Refer to Section IV.

5-50. FUEL AND INDUCTION SYSTEM MAINTENANCE.

5-51. CARBURETOR. Type PD-12H4 carburetors are installed on the R-1820-92 engines, while the R-1830-90 engines require type PD-12F5. The R-1830-92 engines have a blower section with an adapter mounting pad which is slanted aft. On the R-1830-90 engine, the blower section adapter mounting pad is horizontal. Basically, the pressure-type downdraft carburetors are identical with the five functional sections, and contain the main throttle body, automatic mixture control, fuel regulator unit, fuel control, and carburetor-to-blower case adapter.

5-52. CARBURETOR CHECK PROCEDURES. Paragraph 5-18 may be referred to for pressure checking the carburetor.

5-53. EMERGENCY FUEL SHUTOFF VALVE CHECK.

a. Place the manual mixture control in the IDLE CUT-OFF position.

b. Turn the boost pump switch ON and allow the pressure to stabilize.

c. Close the emergency shutoff valve.

d. Turn the boost pump switch OFF.

e. Move the manual mixture control to RICH, allowing the fuel pressure to drop to the discharge nozzle opening point 4 to 5 psi. Return the manual mixture control to the IDLE CUT-OFF position.

f. With the emergency shutoff valve closed, turn the boost pump switch ON.

g. If the fuel pressure does not rise, the emergency shutoff valve is operating satisfactorily. If a rise in the fuel pressure is noted, the emergency shutoff valve assembly is defective and should be repaired or replaced.

5-54. MANUAL MIXTURE CONTROL ASSEMBLY CHECK. Perform the manual mixture control assembly check as described in the following steps.

NOTE

This check will only be accomplished if a clean idle cut-off is not experienced.

a. Disconnect fuel transfer line.

b. Place manual mixture control in idle cut-off.

c. Turn booster pump on.

d. If fuel leakage is noted at mixture control plate mating surface, the plates are faulty and require lapping.

5-55. FUEL FILL VALVE CHECK. The fuel fill valve check is accomplished in the following steps.

a. Disconnect the fuel transfer pipe or tube.

b. Place the manual mixture control in the IDLE CUT-OFF position.

c. Turn the boost pump switch ON and allow the fuel pressure to stabilize.

d. If the fuel fill valve is leaking, fuel will flow from the opening in the fuel transfer pipe mounting pad.

5-56. VAPOR SEPARATORS CHECK. To check the vapor separators, follow the procedure outlined in the following steps.

a. Disconnect the vapor vent return pipe at the vapor separator.

b. Place the manual mixture control in the IDLE CUT-OFF position.

c. Turn the boost pump switch ON and allow the pressure to stabilize.

d. Check the vapor separator outlet connection for leakage.

e. Turn the boost pump OFF.

Note

If leakage is noted, the following steps must be performed to determine which of the vapor separators is faulty.

f. Remove the 1/8-inch pipe plugs from the vapor separator seats. Hold the seat with a wrench to prevent the seat from backing out.

g. Place the manual mixture control in the IDLE CUT-OFF position.

h. Turn the boost pump switch ON and allow the pressure to stabilize. Since the vapor separators are connected internally the seat with the greatest fuel flow will indicate which of the vapor separators is faulty.

Note

If the leak cannot be located by the preceding procedure, remove the carburetor.

5-57. OIL DILUTION VALVE CHECK. The following checks must be made to locate any malfunction of the oil dilution valve.

a. Disconnect the fuel pipe at the outlet side of the oil dilution valve.

b. Place the manual mixture control in the IDLE CUT-OFF position.

c. Turn the boost pump switch ON and allow the pressure to stabilize. If any flow is noticed, the oil dilution valve must be replaced.

CAUTION

Extreme care must be taken when installing a new oil dilution valve. Make certain that the inlet and outlet sides of the valve are correctly positioned.

5-58. PRIMER SYSTEM CHECK. Check the primer system as outlined in the following steps.

a. Disconnect the primer pipe at the outlet side of the primer solenoid.

b. Place the manual mixture control in the IDLE CUT-OFF position.

c. Turn the boost pump switch ON and allow the pressure to stabilize.

d. If any fuel seepage or flow is noticed, replace the primer assembly.

5-59. CARBURETOR GASKETS, PLUGS, AND CONNECTIONS CHECK. The procedure for checking the carburetor gaskets, plugs, and the connections is performed as outlined in the following steps.

a. Place the manual mixture control in the IDLE CUT-OFF position.

b. Turn the boost pump switch ON and allow the pressure to stabilize.

c. Inspect the fuel control, regulator, plugs, and connections for any signs of fuel leaks.

Note

If any fuel leaks are noted at the carburetor parting surfaces, replace the following gaskets as required: jet cover, poppet valve cover, manual mixture control to fuel control, idle valve cover, fuel strainer cover, and the primer to regulator.

CAUTION

Do not use gasket paste or sealing compound when installing a gasket on any surface of the carburetor.

d. Remove and inspect any plugs which are leaking, or show any signs of fuel stains, to determine if the leak was caused by a faulty plug or insufficient torque.

5-60. FUEL PUMP CHECK. Check the fuel pump as outlined in the following steps.

a. Disconnect the fuel pump vent and drainpipes.

b. Place the manual mixture control in the IDLE CUT-OFF position.

c. Turn the boost pump switch ON and allow the pressure to stabilize.

d. If any fuel seepage or flow is noted, the fuel pump must be repaired or replaced.

5-61. FUEL SELECTOR VALVE CHECK. Check the fuel selector valve as described in the following steps.

a. Start the engines and operate at 1000 rpm.

b. Place the selector valves in the OFF position.

c. Operate the engines until they stop due to fuel starvation.

Note

If the engine operates more than 3 minutes, one or both selector valves are assumed to be faulty.

d. If faulty valves are indicated, refer to Section VI for information concerning these valves.

5-62. ACCELERATOR PUMP CHECK. Check the accelerator pump as outlined in the following steps.

a. Place the manual mixture control in the IDLE CUT-OFF position.

b. Turn the boost pump switch ON and allow the pressure to stabilize.

c. Close the emergency shutoff valve.

d. Turn the boost pump switch OFF.

e. Place the manual mixture control in the RICH position.

f. If the fuel pressure drops to zero, either the discharge nozzle or the accelerator pump is leaking. The discharge nozzle and the accelerator pump are connected to the same fuel passage; therefore, it will be impossible to pinpoint the source of trouble if a pressure drop is noted. Since the accelerator pump is almost trouble free, the discharge nozzle should always be checked prior to changing the accelerator pump.

5-63. DISCHARGE NOZZLE CHECK. Check the discharge nozzle as described in the following steps.

a. Place the manual mixture control in the IDLE CUT-OFF position.

b. Turn the boost pump switch ON and allow the pressure to stabilize.

c. Close the emergency shutoff valve.

d. Turn the boost pump switch OFF.

e. Move the manual mixture control from IDLE CUT-OFF to RICH.

f. The fuel pressure should drop to 4 to 5 psi.

5-64. CARBURETOR MINOR REPAIR.

5-65. REPAIR OF MANUAL MIXTURE CONTROLS. If the fuel pressure drop exceeds 2 psi in 15 seconds, the manual mixture controls must be repaired as described in the following steps.

a. Remove the manual mixture control latch assembly.

b. Remove the manual mixture control outer plate, cam, gasket, and spring.

c. Inspect the manual mixture control outer plates for damaged contact surfaces or warpage.

d. Remove the inner mixture control plate, if damaged.

e. Resurface the contact surfaces of the plates, using a fine grade of emery cloth and a surface plate.

f. If the gasket between the inner mixture control plate and the casting was damaged during disassembly, replace the gasket.

Note

Alcohol will help remove dry shellac from the casting.

g. Shellac and install the gasket between the casting and the inner mixture control plate.

h. Install the inner mixture control plate. Make certain that the attaching screws do not extend above the surface of the inner mixture control plate.

i. Install the outer mixture control plate, cam, gasket, and spring.

CAUTION

Make certain that the milled part of the cam is down as the cam is positioned in the housing. With the cam in this position, the outer plate should cover the three large holes in the inner plate.

j. Place the manual mixture control latch in the IDLE CUT-OFF position and install the latch. Tighten and lockwire the attach screws.

5-66. REPAIR OF FUEL FILL VALVE. If the fuel fill valve is leaking, repair the valve as described in the following steps.

a. Remove the manual mixture control latch assembly.

b. Remove the manual mixture control outer plate and cam.

c. Remove the fuel fill valve using a special deep socket, Stock No. 5120-142-3941 (T25082).

d. Rotate the fuel fill valve in the seat to determine if the valve stem is bent. If any wobble is noted, the assembly must be replaced.

e. Check the seating surface of the fuel fill valve and seat for nicks or burrs. If the valve is not seating properly, lap the valve and seat with a compound of 280 grit or finer.

Note

It is not necessary to disassemble the fuel fill valve assembly to lap the valve and the valve seat.

f. Remove all the lapping compound and check the valve for proper seating.

g. Replace the fuel fill valve, using the special deep socket as in step c.

h. Install the manual mixture control outer plate and cam.

i. Install the manual mixture control latch assembly.

5-67. IDLE SPEED ADJUSTMENT.

a. Start the engines and operate until normal oil and cylinder head temperatures are reached.

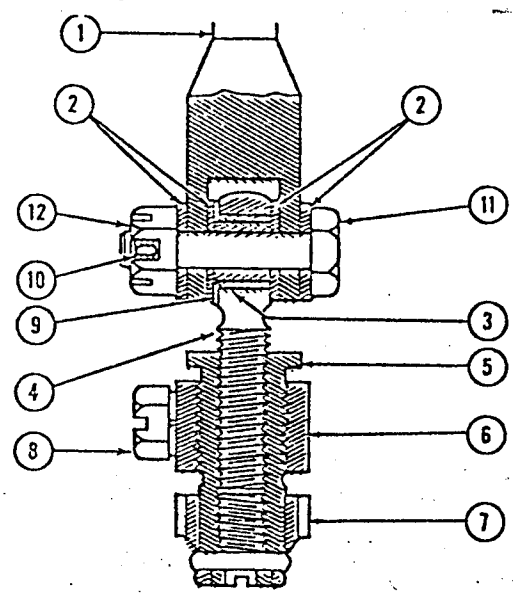

1. Idle Link
2. Plain Washer
3. Loose Bushing
4. Screweye
5. Threaded Bushing
6. Idle Lever
7. Idle Mixture Adjuster
8. Idle Mixture Adjustment Lockscrew
9. Wave Washer
10. Cotter Pin
11. Idle Link Bolt
12. Nut

CARBURETOR LINKAGE

33,692

Figure 5-3. Carburetor Idle Adjustments

b. Close the throttle and adjust the throttle stop until the engine idles at 500 rpm.

5-68. IDLE MIXTURE ADJUSTMENT PROCEDURE.

a. Place the propeller in the TAKEOFF position.

b. Check that the cylinder head temperature is normal.

c. Check that the oil temperature is normal.

d. Place the mixture control in the AUTO-RICH position.

e. Back off the idle-speed stop.

f. Maintain rpm (500 rpm) by use of the throttle.

g. Move the mixture control slowly and evenly toward the IDLE CUT-OFF position.

Note

Slowly may be defined as the rate of movement which would require 12 to 15 seconds to move the mixture control lever from the AUTO-RICH to the IDLE CUT-OFF position. This slow movement of the lever is necessary so that the engine can respond to the change in fuel-air mixture, and that an accurate reading can be obtained as the best power mixture is reached.

h. If a rise of more than 10 rpm, or a drop in manifold pressure exceeding ¼-inch Hg is noted, the idle mixture is too rich. A rapid decrease in rpm indicates too lean a mixture. After maximum rpm rise has been obtained and the rpm starts to decrease with further leaning of the mixture, return the mixture control to the AUTO-RICH position.

Note

The IDLE rpm fuel-air ratio must check according to the preceding procedure to prevent spark plug fouling (which would result in an excessive magneto drop during the ignition check), and to prevent incorrect fuel-air ratio in the cruise range.

i. If the idle mixture is too rich or too lean, turn the idle mixture adjuster *(figure 5-3)* clockwise to enrich the mixture, and counterclockwise to lean it.

j. After obtaining the correct rpm rise, or if several adjustments of the idle mixture adjuster mechanism were made, operate the engine at cruise rpm for several minutes to clear the spark plugs and again check the mixture at idle speed.

5-69. ENGINE-DRIVEN FUEL PUMP ADJUSTMENT. With the engine operating at 2300 to 2400 rpm (manifold pressure at 30 inches Hg), the fuel pressure gage must read 17 (±1) psi. If the fuel pressure gage shows more or less pressure than 17 (±1) psi, proceed with the following steps.

a. Adjust the pressure regulator screw on the bottom of the pressure relief valve housing on the engine-driven pump.

b. Loosen the locknut and turn the adjusting screw clockwise to increase the pressure. Turn the adjusting screw counterclockwise to decrease the pressure, and tighten the locknut.

c. Check the two drainpipes on the engine-driven pumps for any fuel discharge. Replace the pump if leakage from either drainpipe continues.

d. Idle the engine and watch the fuel pressure gage for a change of approximately 2 psi. If the pressure drops to 14 pounds or lower, replace the pump.

Note

Some fluctuation in fuel pressure may be caused by air in the lines.

5-70. IGNITION SYSTEM MAINTENANCE.

5-71. GENERAL DESCRIPTION. *(See figures 4-69, and 5-4 through 5-6.)* The ignition system consists principally of magnetos, distributors, ignition harness,

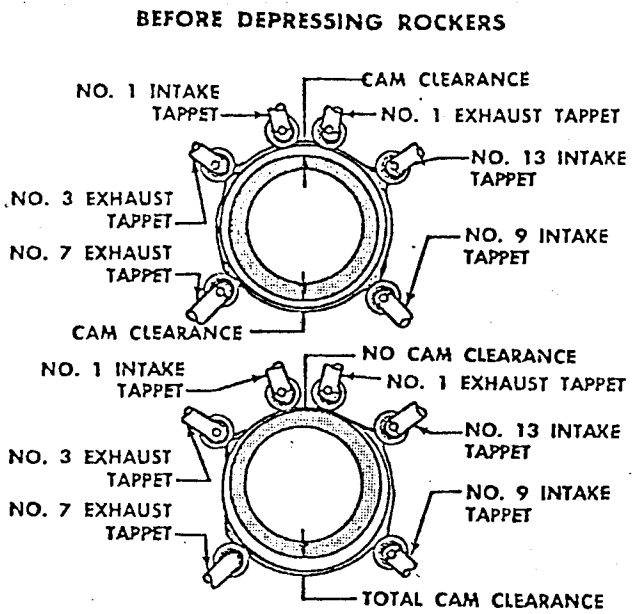

AFTER DEPRESSING ROCKERS
CAM POSITION

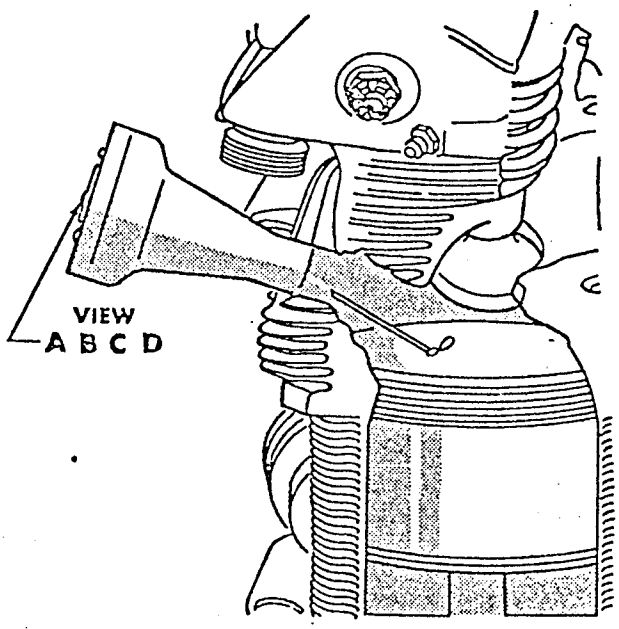

TIME-RITE PWA-4142 INDICATOR
INSTALLED IN SPARK PLUG HOLE

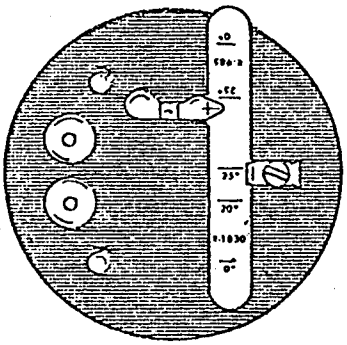

VIEW A
SLIDE CLOSE TO PIVOT ARM

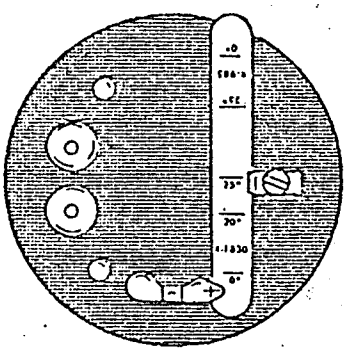

VIEW B
SLIDE AT FARTHEST POINT

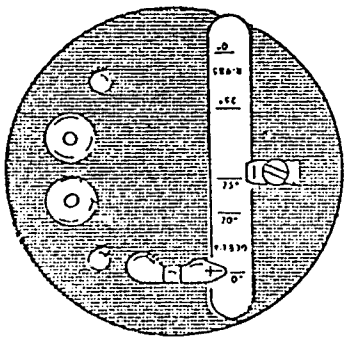

VIEW C
"O" ALIGNED WITH SLIDE

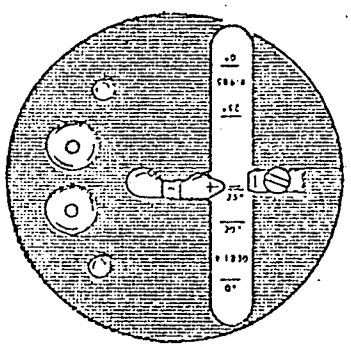

VIEW D
SLIDE AT 25° MARK

33,661

Figure 5-4. Timing and Synchronizing Magnetos

spark plugs, and an ignition switch. Proper-maintenance of the ignition system components is an absolute necessity, as some of the component parts operate at very high speeds requiring a high degree of accuracy in maintenance, in order that the fuel-air mixture will ignite at the correct instant. The use of proper tools is mandatory for the maintenance of the ignition system. The required tools are described with the instructions for the ignition system maintenance.

5-72. LOCATION OF SPARK ADVANCE POSITION WITH TIME-RITE INDICATOR.

a. Remove the spark plug from the No. 1 cylinder.

b. With thumb over the spark plug hole, turn the engine until the piston is on the compression stroke.

c. Install the timing indicator in the spark plug hole, and install the arm and scale in the indicator.

d. Turn the cap so that the slot is parallel with the vertical axis of the cylinder, and the scale is positioned to the right of the slot.

e. Turn the engine until the pivot arm goes all the way down and back up to the top of the scale. This leaves the sliding pointer at the highest point of piston travel.

f. Adjust the scale so that the zero mark aligns with the hairline on the sliding pointer.

g. Move the sliding pointer up to the top of the scale and turn the engine in the opposite direction of rotation, until the piston is approximately at the mid-point of its compression stroke. Again check the position of the sliding pointer. It should align with the zero mark on the scale. If it does not align, repeat steps d through f.

h. Move the sliding pointer to the top of the scale.

i. Turn the engine in the direction of rotation until the pivot arm moves the pointer to the exact timing position desired (25°BTC).

j. After the timing has been accomplished, turn the engine in the direction of rotation until the piston is past the top dead center position. Check that the sliding pointer still aligns with the zero position on the scale. If it does not, the scale has been moved. Again check the timing procedure.

5-73. PREPARATION FOR INSTALLATION OF IGNITION SYSTEM MAGNETO.

a. Remove the spark plug from the front of cylinder No. 1, and locate the piston on the compression stroke by manually turning the propeller.

b. Install the timing template *(see figure 5-7)* on the engine nose case.

c. Use a timing pointer, or wrap a piece of stiff wire around the propeller hub or shaft, and line it up with the timing template.

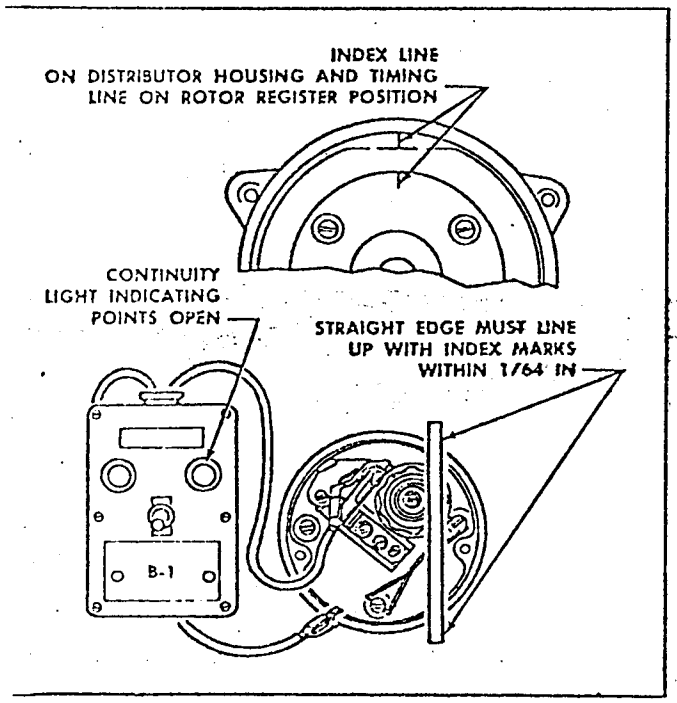

33.662

Figure 5-5. Checking Internal Timing

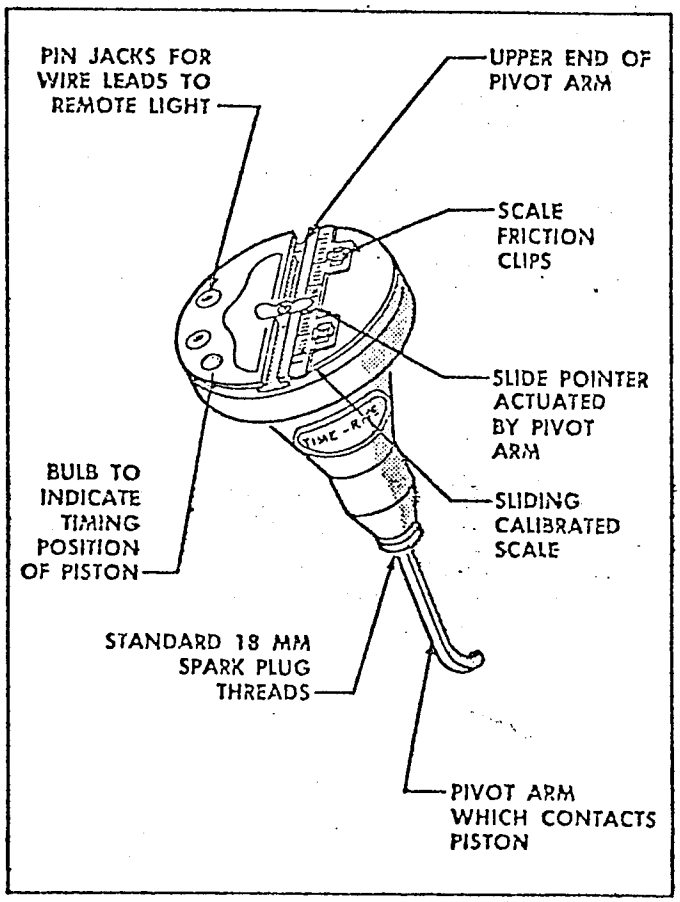

33.725

Figure 5-6. Time-Rite Indicator

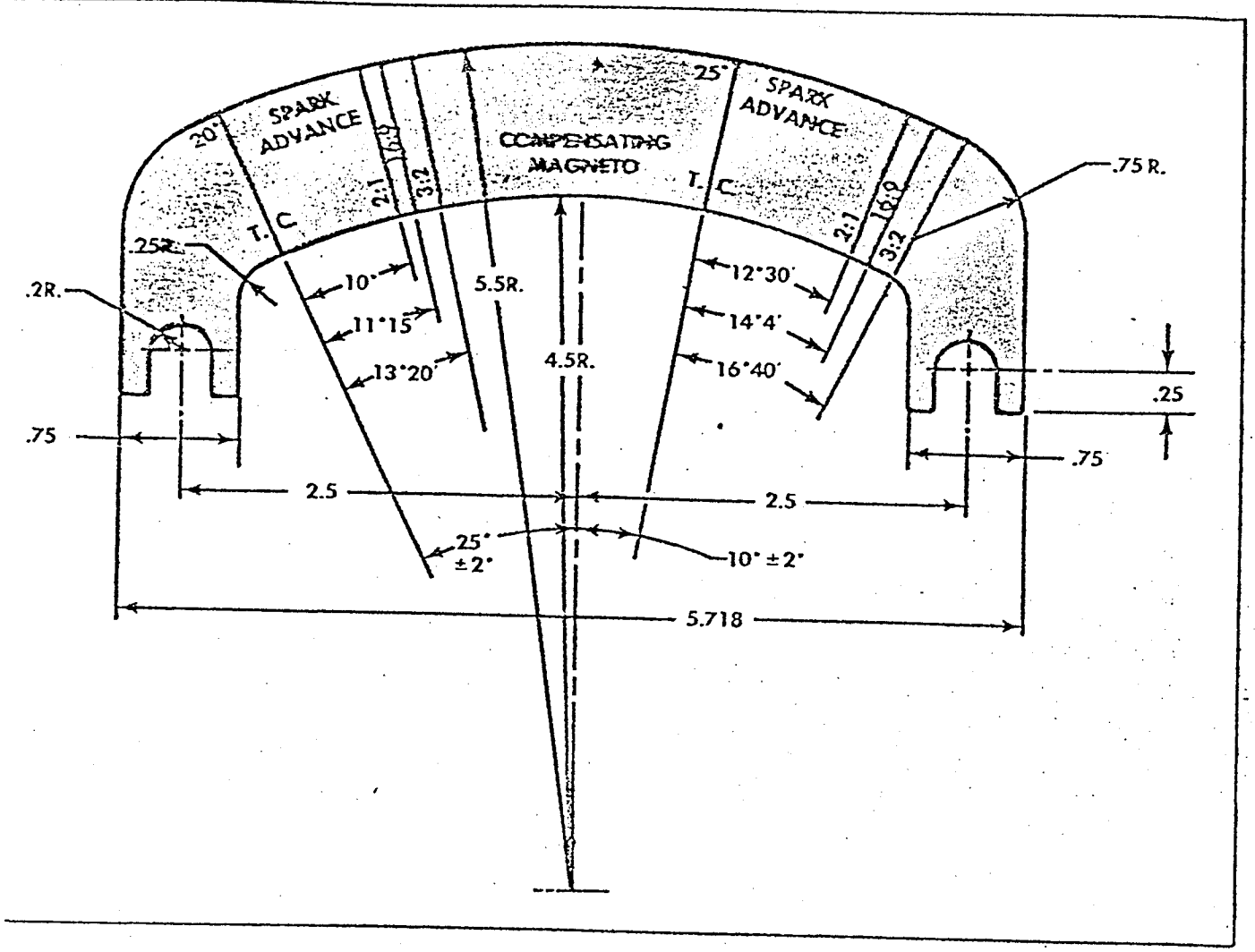

Figure 5-7. Ignition Timing Template

33,182

d. Turn the propeller shaft until piston No. 1 is the top of its compression stroke (the top dead nter indicator just stops moving downward).

e. Set the timing pointer to the zero degree mark, top center of the timing template.

f. Continue turning the propeller shaft in the rection of normal rotation until the piston just arts to move downward (the top dead center indicator st starts to move upward).

g. Check the movement of the timing pointer from e top center mark on the timing template. To obtain ue top dead center, move the pointer half the distance ck to the top center (zero degree mark) graduation the timing template.

h. Move the propeller shaft 90 degrees in the direcn opposite to normal rotation.

i. Move the propeller shaft in the direction of rmal rotation until the timing pointer aligns exactly ith the cylinder No. 1 firing mark on the timing mplate.

5-74. MAGNETOS.
(See figures 5-4 and 5-5.)

5-75. TEST EQUIPMENT REQUIRED FOR TIMING MAGNETOS.
(See figure 5-6.)

Nomenclature	*Stock No.*
Timing Light B-1	6625-512-9180
Indicator, Time-Rite (18mm)	4920-346-4314

5-76. RETIMING MAGNETOS TO ENGINE.

a. Locate the correct crankshaft timing position 25° BTC (before top compression) stroke of the No. 1 cylinder.

b. Connect the timing light to the magneto and turn the timing light switch ON.

c. Turn the master ignition switch and individual ignition switch ON.

d. Rotate the crankshaft opposite the normal direc-

tion of rotation one-quarter turn.

e. Move the pointer on the Time-Rite indicator to the top of the scale.

f. Rotate the crankshaft slowly in the direction of normal rotation, holding approximately 40-inch-pounds torque on the cam retaining screw opposite the direction of cam rotation, until the timing light illuminates for the No. 1 lobe.

g. Note the direction the magneto is out of time (advance or retard) on the Time-Rite indicator.

h. Again set the crankshaft to the proper timing position.

i. Loosen the magneto mounting nuts to allow the magneto to shift on its mounting. Shift the magneto until the timing light illuminates for the No. 1 lobe, and the cam steps align with the stationary timing mark (± 1/64 inch), while holding 40 inch-pounds of torque opposite to normal direction of rotation.

j. If the slots in the magneto mounting flange do not allow enough shift for proper timing, remove the magneto and turn the shaft one complete revolution.

k. Install the magneto and rotate it in the slots, watching the timing light. The timing light should illuminate as the magneto is rotated opposite the direction of the cam rotation, and go off when the magneto is moved in the normal direction.

l. If the timing light does not illuminate, or goes off, remove the magneto and rotate the shaft one turn and again install the magneto.

m. If the proper magneto position cannot be obtained after repeating step 1 several times, remove the magneto. Remove the drive coupling from the shaft and rotate on the shaft spline. Repeat this procedure until the magneto mounting studs are approximately in the center of the magneto mounting flange slot.

n. When the proper position is obtained, rotate the magneto in the slots until the timing light illuminates for the No. 1 lobe, and the cam step aligns with the stationary timing mark (± 1/64 inch), while holding 40 inch-pounds of torque opposite to normal direction of rotation.

o. Tighten the mounting nuts.

p. If the timing is still off, repeat all steps of the procedure necessary to obtain correct magneto timing.

q. After the magnetos have been correctly timed, turn off the ignition switches, and install all components.

Note

If the breaker points do not open when the cam steps align with the stationary timing mark, the internal timing is incorrect. Qualified personnel only will adjust the breaker points to compensate for normal cam follower wear.

5-77. INSPECTION AND CLEANING OF BREAKER POINTS.

a. Inspect the breaker point assembly for oil, grease, carbon, or dirt. Wipe with clean dry cloth.

b. Inspect the breaker points for pitting or carbon on the parting surfaces by opening the parting surface not over 1/16 inch with a small screwdriver. If the breaker point surfaces are dirty, they will be cleaned with cleaning naphtha or acetone, using care not to get cleaning solvent in the magneto shaft bearing. If the breaker points are pitted, remove the magneto and send it to the base shops for breaker point assembly replacement.

c. If the parting surface of the breaker points has a frosty coating, they are considered to be operating satisfactorily and should not be cleaned.

d. Inspect breaker point cam follower felt for proper lubrication as follows:

(1) Inspection of breaker assemblies equipped with narrow cam follower felt.

(a) Apply light pressure with thumb or fingernail against the cam follower felt adjacent to the area of contact with the breaker cam. If a light film of oil remains on the thumb or fingernail when pressure is released, the cam-follower felt has adequate lubrication until the next inspection period. If no film of lubricant is visible on the fingernail, carefully apply two drops of lubricant, SAE60, Specification MIL-O-6082, to the bottom felt of the cam follower and one drop of the same lubricant to the upper part of the felt. *(See figure 5-8.)*

Note

Observe extreme caution and apply the lubricant only in the quantities and locations indicated. Make certain that no oil remains on the breaker main spring or breaker contact pads after applying oil.

(b) Allow the magneto to remain undisturbed for at least 15 minutes after lubricating. This will allow the oil to penetrate the felt and minimize any tendency for the oil to be thrown off during operation.

(c) If either of the following conditions are noted, replace the magneto.

(1) Pits in the contact area covering one-third or more of the total area. Do not open breaker points more than 1/16 inch or spring will be damaged.

(2) Excessive wear, looseness, cracks, or roughness of the cam follower, or a loose or torn follower felt.

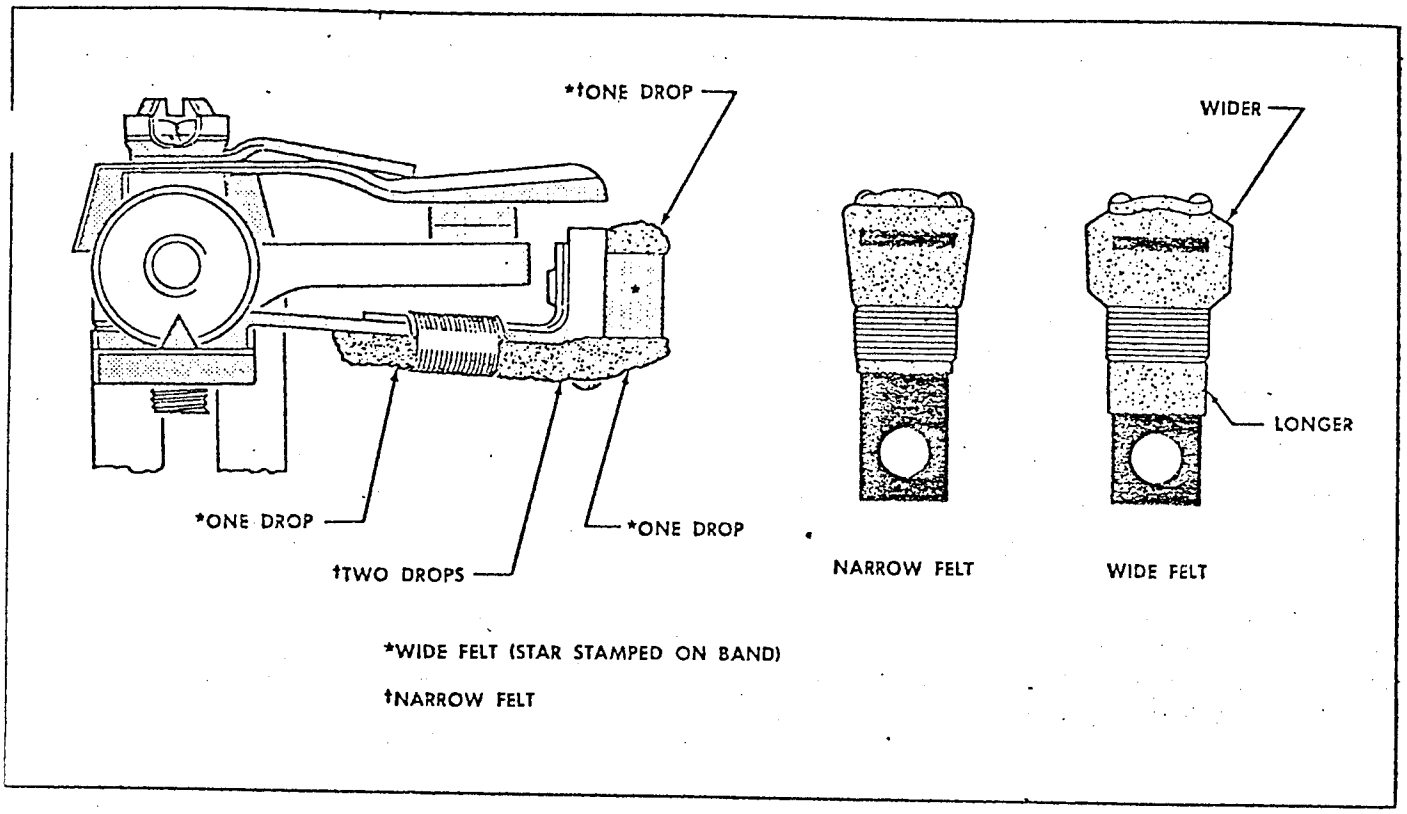

Figure 5-8. Lubrication of Magneto Cam Follower—Wide or Narrow Felt

40,607

(2) Inspection of breaker assemblies equipped with wide American-type felt.

(a) Apply a light pressure with the thumb or fingernail against the cam follower felt adjacent to the area of contact with the breaker cam. If a light film of oil remains on the fingernail, the felt has adequate lubrication until the next inspection period. If lubrication is necessary, carefully apply three drops of Bendix High-Temperature lubricant, 10-86527, FSN 9150-698-2381 to the felt as shown in figure 5-8.

(b) Allow the magneto to remain undisturbed for at least 30 minutes after lubricating to allow the oil to penetrate the felt and to permit the diluent to evaporate.

5-78. IGNITION HARNESS CHECK. An ignition harness check will be performed whenever improper operation of the ignition system components occurs. Perform a complete electrical check with an approved harness tester as outlined in the following steps.

a. Disconnect all leads from the spark plugs and ground each lead to the engine.

b. Connect a ground wire to the engine, or the airframe from the ignition tester.

c. Connect one lead at a time from the harness to the lead wire from the tester, again grounding the ignition lead after testing. If leakage is indicated, rotate the crankshaft to determine if the leakage stops at a different crankshaft location. If the leakage stops, the ignition leak is through the distributor finger to the magneto, through the secondary coil to the ground.

d. If two or more ignition leads show leakage during the test, repeat the test on one of the leads having leakage with the other leaking leads insulated from the engine. If insulating the other leads from the engine eliminates the leakage, the leakage is either between the leads or in the corresponding electrodes in the distributor block. Replace all leaking ignition leads and/or defective distributor blocks.

5-79. SPARK PLUGS.
(See figure 5-9.)

5-80. REMOVAL OF SPARK PLUG. Removal of the spark plug must be accomplished in accordance with the applicable steps as follows.

a. Withdraw the ignition cable lead from the plug. Care must be taken to pull the lead straight out and in line with the centerline of the plug barrel. If the lead is not withdrawn properly, a side load can be imposed which may result in damage to the barrel insulator and connector. If the lead cannot be withdrawn easily, the resisting contact between the neoprene collar and the barrel insulator can be broken by a rotary twisting of the collar. Take care to avoid undue distortion of the collar and possible side loading of the barrel insulator.

b. Unscrew the plug and remove it from the engine. Carbon and other combustion products deposited on the lower threads may result in greater torque being

required to remove the plug than was used in installation. Torque limitations do not apply to plug removal. Excessively high torque imposes a shearing load on the threaded section, and if sufficiently severe may produce a failure in this section of the plug during removal.

Note

A torque-indicating handle should not be used for plug removal because of the high torque required to break some plugs loose.

c. If the plug is sheared during attempted removal, replace the cylinder assembly. Efforts to unscrew the threaded end are seldom successful and often lead to damage of the bushing threads. Thus, the cylinder is unsuitable for installation of a new plug. Because a high torque is required in the removal of the plugs, precautions must be taken against tilting and slipping of the wrench.

d. Place the plugs that are removed from the engine in a tray that will identify their position in the engine before removal.

5-81. REMOVAL OF SPARK PLUG FROZEN TO BUSHING. Removal of seized spark plugs in the cylinder may be accomplished by application of liquid carbon dioxide and the use of a metal funnel adapter fabricated with a hole at the apex just large enough to admit the funnel of a CO_2 bottle. *(See figure 5-9.)* When the seized plug cannot be removed by normal torque, the funnel adapter is placed over and around the plug. Place the funnel of the CO_2 bottle inside the funnel adapter and release the carbon dioxide to chill and contract the spark plug. Break the plug loose with a wrench. A warm cylinder head at the time the carbon dioxide is applied will aid in the removal of an excessively seized plug.

5-82. INSPECTION OF REMOVED SPARK PLUG. After the spark plug has been removed, an inspection must be made to determine if the cylinder will require further maintenance. Check the plug for the following items:

a. Excessive carbon on the firing end of the plug.

b. Oil in the plug firing end.

c. Damaged electrodes or ceramic.

d. Spark plug fouling.

e. Type of spark plug, for verification of correct type for the engine being repaired.

f. Copper runout of the center electrode.

Note

If copper runout is noted, the cylinder previously containing the defective plug must be removed, as this indicates that the cylinder head temperature has exceeded 1083°C (1981.4°F). The engine must be inspected to locate the cause of the excessive temperature. The oil screen and the magnetic sump plug must be inspected for metal particles. If copper runout is found on 25 percent or more of the cylinders, the engine must be removed from service, as the excessive heat to which it has been subjected may cause a complete failure. Do not confuse carbon deposits with copper runout.

When it is noted that a spark plug has not been firing, locate the cause prior to any further engine operation.

5-83. PREPARATION OF ENGINE FOR SPARK PLUG INSTALLATION. Prepare the engine for spark plug installations as described in the following steps.

a. On engines using Heli-Coil inserts, the inserts must be cleaned to insure that the plug may be inserted by using the fingers only. A wire brush may be used in conjunction with a power tool if care is exercised to select a brush which will not disintegrate with use. No bristles should be allowed to fall into the combustion chamber. No material should be removed from the Heli-Coil proper or from the cylinder head surrounding the insert. Take particular care not to remove material in the region of the plug gasket seating surface. Material removal from this area will cause combustion leakage and cylinder head damage. Check the insert for loose ends on the combustion chamber side, as a loose end may glow during operation, resulting in pre-ignition and subsequent cylinder failure.

CAUTION

Cleaning of Heli-Coil inserts with a tap is prohibited, as permanent damage to the insert will result.

b. On engines employing brass or stainless-steel bushings, the threads may be cleaned with a tap, FSN 5136-142-6745. The area between the flutes of the tap should be filled with clean grease, Specification MIL-L-3545, or equivalent. This will prevent dropping hard carbon or other material into the combustion chamber. Align the tap by hand with the bushing and start by hand into the bushing until there is no possibility of the tap cross-threading in the bushing. Screw the tap into the bushing to a depth sufficient to insure that full tap cutting thread reaches the bottom bushing thread. The tap previously specified will

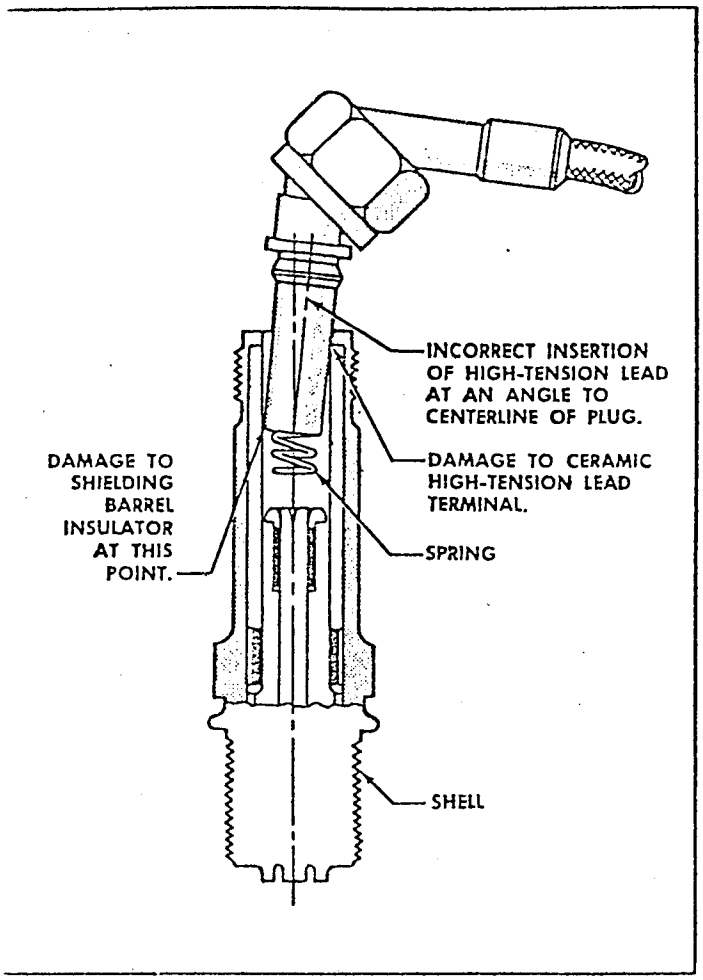

REMOVING SPARK PLUG LEAD

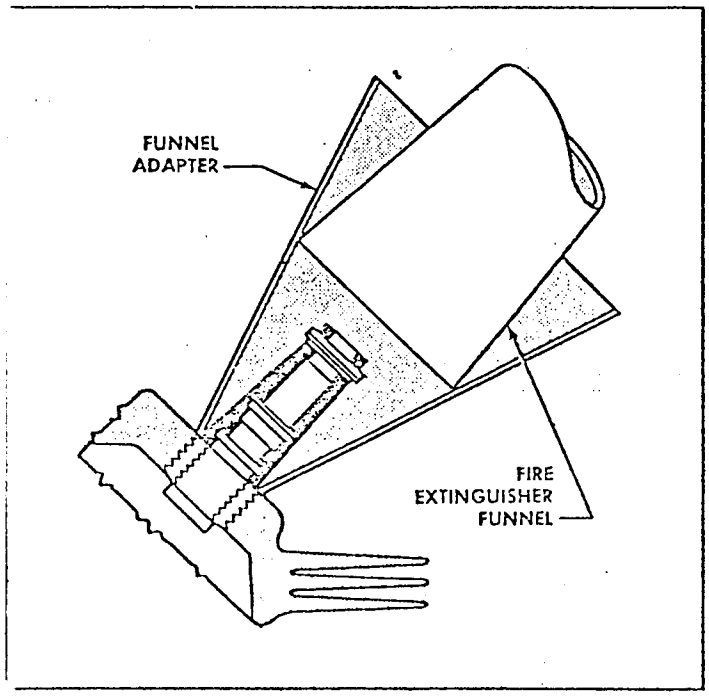

REMOVING SPARK PLUG FROZEN TO BUSHING

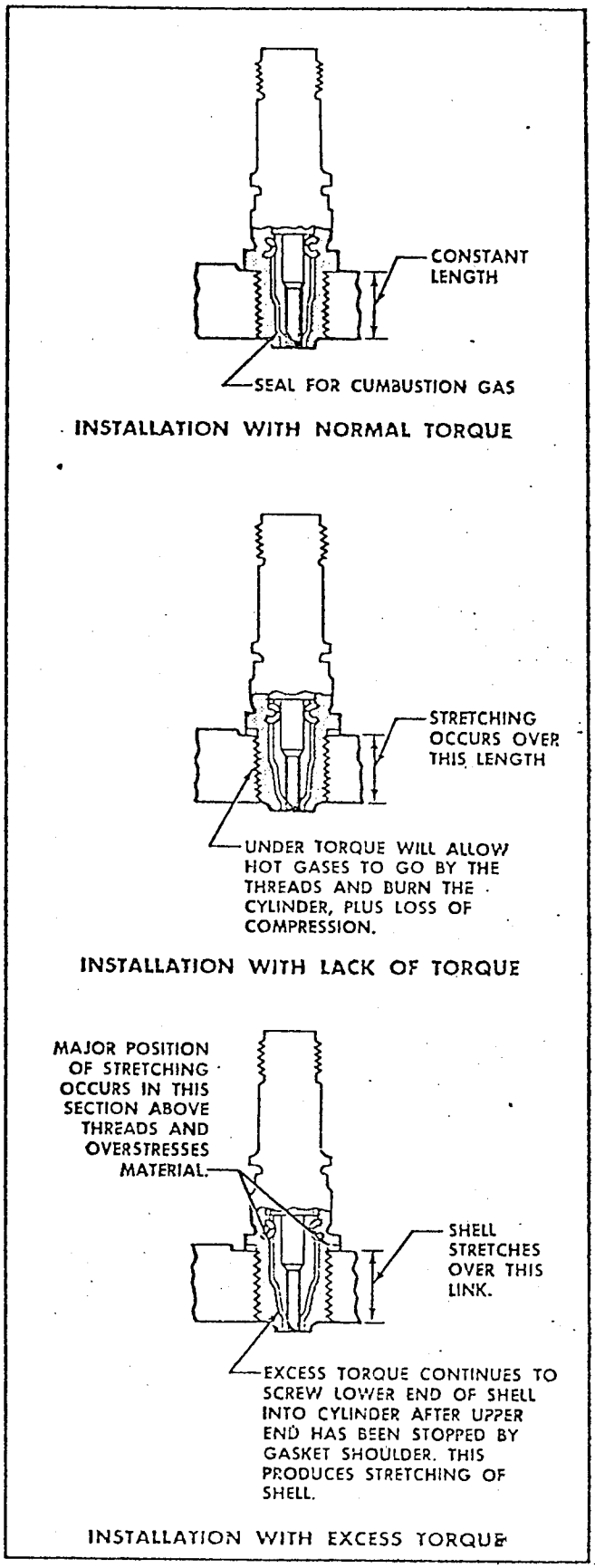

EFFECT OF TORQUE APPLIED TO SPARK PLUGS

33,666

Figure 5-9. Spark Plug Precautions

lean carbon and combustion deposits from the bushing threads, but will not remove bushing material unless the pitch diameter of the threads has contracted due to shrinkage or some unusual condition. If the bushing is loose in the cylinder or threads are cross tapped, or otherwise damaged in a serious manner, the cylinder must be replaced.

Note

The piston must be moved from the top dead center position before inserting the tap into the bushing.

c. Clean the spark plug gasket seating surfaces with clean cloth and naphtha.

5-84. INSPECTION OF SPARK PLUGS PRIOR TO INSTALLATION. To insure optimum operation of the spark plugs, the following action and items will be accomplished.

a. Make certain that the spark plug is the approved type. Refer to *T.O. 8E2-6-1-37.*

b. Check for evidence of rust-preventative compound on the plug exterior, core and interior of the barrel end of the plug. If rust-preventive compound is evident, it must be removed by cleaning the plug with cleaning solvent, Federal Specification P-S-661, applied with a brush. Dry the plug with air from a tank containing dehydrated air.

c. Check for nicked or damaged threads and indications of cracks in the insulator.

d. Inspect the barrel end of the plug for rust at the center electrode contact, and for foreign material which might result in poor contact. Remove foreign materials with an air blast.

e. Check the copper gaskets. Gaskets which have been excessively flattened, scored, dented, or distorted by previous use must be discarded. When the thermocouple gasket is used, no additional gasket may be used.

f. Plugs which are found defective for any of the foregoing reasons must be disposed of in accordance with *T.O. 8E2-6-1-37.*

Note

Defective massive electrode spark plugs will be condemned and placed in scrap metal bins. Platinum electrode plugs that are defective must be condemned, tagged as such, and returned to supply.

5-85. INSTALLATION OF SPARK PLUGS.

a. The important points to be understood and remembered regarding the proper installation of spark plugs are insertion and torque. Insertion refers to screwing the plug into the cylinder with the fingers until it contacts the gasket. If the plug can be inserted into the cylinder head by using the fingers only, the threads are good. Torque refers to the action of compressing the gasket.

b. Apply a very light coat of antiseize compound, Specification MIL-C-5544 or MIL-T-5544, to the first three threads from the electrode end of each plug to be installed in those engines which have brass bushings. On those engines having stainless steel bushings or using Heli-Coil inserts, a light coat of engine oil, Grade 1100, will be applied to the threads. Insert the plug and screw it all the way in with the fingers. Apply a torque of not less than 300 inch-pounds nor more than 360 inch-pounds.

5-86. INSTALLATION OF SPARK PLUG TERMINALS. Installation of spark plug terminals is accomplished as described in the following steps.

a. Clean the high-tension lead terminal sleeve contact and the integral seal with a cloth moistened with methylethyl-ketone, Federal Specification TT-M-261, Stock No. 8500-605600, to remove any trace of dirt or grease that may be present.

b. Insert the high-tension terminal sleeve contact in the spark plug barrel. Care must be taken not to break the sleeve or crack the barrel insulator.

c. Screw the terminal nut all the way on with the fingers.

d. Tighten the terminal nut with the proper lead wrench.

Note

If the proper lead wrench is not available, the terminal may be tightened with the proper size open-end wrench. Turn the nut 15 to 60 degrees past the noticeable point of drag.

5-87. TOOLS REQUIRED FOR CARE OF SPARK PLUGS. (See table 5-7.)

5-88. VALVE SYSTEM MAINTENANCE. Tools required:

2 each — Valve depressors, Stock No. 5120-143-8206.

1 each — Indicator Time-Rite, Stock No. 4920-346-4314.

5-89. VALVE SYSTEM INSPECTION. *(See figure 5-10.)* Valve clearances establish valve timing when the engine is operating. All cylinders receive their fuel-air mixture from a common supply, and it is essential that valve clearances be as uniform as possible. Since temperature changes affect valve clearances on engines, it is essential that sufficient valve clearance is present to prevent the valve from holding open when extreme cold temperatures are encountered. Engines having

TABLE 5-7
TOOLS REQUIRED FOR CARE OF SPARK PLUGS

FSN	*Nomenclature*
5120-240-8703	Adapter, socket wrench, ⅜ to ½ inch.
5120-243-7326	Bar, socket wrench extension, ½-inch – square drive, 6 inches.
5120-227-8074	Bar, socket wrench extension, ½-inch – square drive – 10 inches.
5120-230-6385	Handle, socket wrench ratchet, male, ½-inch – square drive.
5120-	Handle, socket wrench torque indicating ratchet, male, ⅜-inch square drive.
5120-269-7971	Joint, socket wrench universal, ½-inch square drive.
5120-243-7342	Socket, spark plug, ⅞ inch.
5136-142-6745	Tap, 18mm, spark plug bushing, cleanout.
5120-131-9554	Wrench assembly, spark plug coupling, short.
5120-131-9555	Wrench assembly, spark plug coupling, long.

valves holding open will make cold weather starting difficult. Correct valve clearance is necessary to establish proper valve seating velocity. Valves having too small a clearance will result in blowby with possible subsequent failure of the valve and seat, due to extreme temperatures to which the valve is subjected when blowby occurs. If valve clearances are excessive, this may result in valve pounding and stem stretching, which is conducive to valve failures.

5-90. At the time of valve adjustment, check the valve operating mechanism (such as rocker arms, rocker arm bearings, and valve springs) for evidence of cracks, breaks, chipping and, on rocker arm bearings, indications of excessive clearance. Check the rocker arms for excessive dryness. If the rocker box is excessively dry, see paragraph 5-93 for corrective action.

Note

No more than six threads (1/4 inch) nor less than three threads (1/8 inch) of a valve-adjusting screw should show above the locknut, and there should be a clearance of not less than 0.031 inch between the valve spring washer and the rocker arm with the valve closed. If the clearance between the valve spring washer and the rocker arm is less than 0.031 inch, or more than six threads on the adjusting screw show above the locknut, replace one or both pushrods spacers with thinner spacers to obtain the desired clearances. If less than three threads of the adjusting screw show above the locknut, use a spacer at one or both ends of the pushrod. When replacing the ball end, extreme care must be taken to insure that the ball end is not cocked.

5-91. To eliminate oil leakage at the rocker box parting surface, check all rocker box covers for flatness. Rocker box cover warpage can be prevented by torquing the nuts to the proper torque values.

5-92. To assure proper sealing of the rocker-box covers, run the engines for approximately 5 minutes at a speed of 1500 rpm and check for leaks.

5-93. CORRECTIVE ACTION FOR VALVE SYSTEM DISCREPANCIES. Dry rocker boxes revealed during the valve system inspection will require removal of the pushrod housing, pushrod, and possibly removal of the tappet, to determine the channel that is clogged or partially clogged. If it is necessary to remove the tappet, thoroughly lubricate it prior to installation on the engine. After a plugged condition of the valve mechanism has been detected and corrected, check after the initial engine run following the valve inspection period, to determine if the trouble has been eliminated, by removing the rocker box cover and checking for presence of lubrication.

5-94. Replace broken or weak valve springs, cracked valve keepers, worn rocker arms, etc, as specified in the applicable handbook. Valve clearances found to be out of adjustment, either statically or dynamically, should be adjusted as described in paragraph 5-97.

5-95. ESTABLISHING CRANKSHAFT POSITION. True top dead center on a master rod cylinder is established when the piston is at the top of the stroke and a straight line could be drawn through the center of the main bearing, the center of the master rod bearing, and the center of the wrist pin. It is possible for the crankshaft to turn from 2 to 4 degrees in either direction from true top dead center without affecting a readable piston movement. It is essential that the proper crankshaft position is established prior to checking or setting the valves. Crankshaft position is established by using the Time-Rite indicator *(see figure 5-6.)*

5-96. ESTABLISHING CRANKSHAFT POSITION BY USE OF TIME-RITE INDICATOR.

a. Remove the most accessible spark plug (front or rear) from the No. 1 cylinder.

b. Referring to the handbook contained in the Time-Rite indicator box with each unit, install the correct contact arm and calibrated scale for the R-1830 engine.

c. Turn the crankshaft in the normal direction of rotation until the No. 1 piston is coming up on the compression stroke.

d. Screw the housing of the Time-Rite indicator into the spark plug bushing, holding the face of the instrument stationary, so that the contact arm will not rotate as the housing is screwed into the bushing.

e. Push the slide pointer upward in the slot until it reaches the end of the slot or indicator arm.

f. Turn the crankshaft in the normal direction of rotation until the indicating arm has moved the slide pointer the maximum distance, and the indicating arm starts to move back upward in the slot.

g. Move the calibrated scale so that the zero mark on the scale aligns with the scribe mark on the slide pointer.

h. Move the slide pointer back to the top of the slot, or until it contacts the indicating arm.

i. Turn the crankshaft in the opposite direction of rotation until the indicating arm has returned to the top of the slot.

j. Again check the zero mark of the calibrated scale against the referenced mark on the slide pointer.

k. Again move the slide pointer to the top of the slot, or until it contacts the indicating arm.

l. Turn the crankshaft in normal direction of rotation. Movement of the slide pointer by the indicating arm will indicate the crankshaft position in relation to true top dead center on the calibrated scale.

5-97. VALVE ADJUSTING PROCEDURE.

a. Remove the necessary rocker box covers. Refer to the Valve Adjusting Table *(see figure 5-17.)*

b. Establish top dead center piston position compression stroke of No. 1 cylinder, as described in paragraph 5-96.

c. Using two depressors, depress No. 9 intake and No. 7 exhaust valves simultaneously and slowly release them. Check and adjust, if necessary, both valves on No. 1 cylinder to 0.020-inch clearance.

d. Lock the adjusting screws in this position by tightening the locknut to 300 to 350 inch-pounds.

e. Adjust both valve clearances of each remaining cylinder in the same manner, using the valve adjusting table as a guide, and turning the crankshaft in normal direction of rotation each time until the proper piston is at top dead center of the compression stroke, which will be determined by procedures described in paragraph 5-96.

f. After all the valves have been adjusted, turn the engine crankshaft two revolutions in the normal direction of rotation and again check the clearance of the valves. If the clearance varies more than ± 0.003 inch when the piston is at top dead center of its compression stroke, adjust the clearances. If adjustments are necessary, repeat the adjustment procedures.

g. After all valves have been adjusted, install rocker box cover gaskets, rocker box covers, spark plugs, and make all other hookups. Torque rocker box cover nuts to 60 to 75 inch-pounds.

5-98. ENGINE ANALYZER.

a. Installation for ignition and vibration analysis.

(1) Install the synchronizing generator on the auxiliary tachometer drive and attach the lead to the generator and analyzer.

(2) Install the capacitive pickup between the lead and the front spark plug on the No. 1 cylinder and attach the lead to the capacitive pickup.

(3) Connect L1 and R1 leads of the analyzer ignition adapter cable to appropriate ignition P lead terminals in the center wing ignition disconnect box. Connect the L2, R2 and black leads to ground. Connect the female plug of the analyzer ignition cable to the ignition adapter cable. Gain access to the center wing disconnect box by removing the lower leading edge section of the left wing fillet fairing.

(4) Attach the analyzer power lead to a 115-volt 60- or 400-cycle power source and to the analyzer.

(5) Install a vibration pickup on each cylinder of the engine, utilizing the permanently mounted support for the pickup. Torque the pickup from 65 to 85 inch-pounds.

(6) Install the vibration harness on the engine, attaching the proper lead to each pickup.

(7) Attach the vibration cable to the vibration harness and to the vibration pickup selector switch.

(8) Mount the vibration pickup selector switch on the mount provided on the side of the analyzer and connect the switch lead from the analyzer to the selector switch.

b. Analyzer adjustment.

(1) Place the following switches to the indicated position:

SYNCH. SE. to GEN
POWER to ON
SWEEP to NORM.
CONDITION to R
MAG. SEL. to 1

REAR BANK OF CYLINDERS LOOKING FORWARD

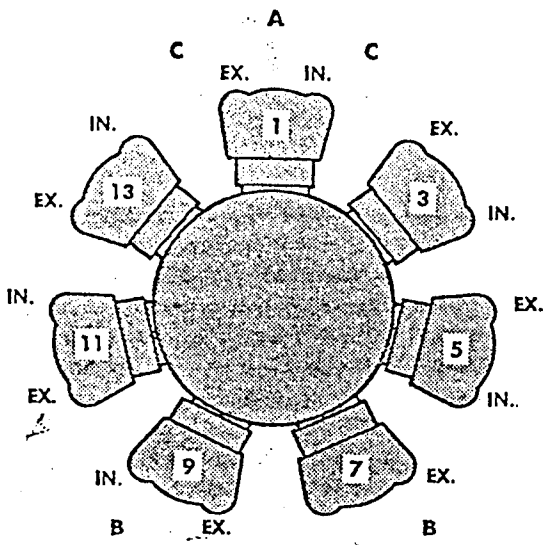

A — SET TO TOP DEAD CENTER ON COMPRESSION STROKE.
B — MOMENTARILY DEPRESS THESE VALVES SIMULTANEOUSLY.
C — SET THESE VALVE TAPPETS.

Adjust Valve Clearance		Set Piston On TOP DEAD CENTER COMPRESSION	Depress Valves*	
INTAKE	EXHAUST		INTAKE	EXHAUST
1	1	1	9	7
10	10	10	4	2
5	5	5	13	11
14	14	14	8	6
9	9	9	3	1
4	4	4	12	10
13	13	13	7	5
8	8	8	2	14
3	3	3	11	9
12	12	12	6	4
7	7	7	1	13
2	2	2	10	8
11	11	11	5	3
6	6	6	14	12

*Depress these 2 valves simultaneously. Then release them slowly before adjusting valves with piston in top dead center position.

R-1830 — VALVE ADJUSTING TABLE

Figure 5-10. Valve Adjusting Table

40,608

(2) Start the engine in accordance with existing directives.

(3) After normal engine warmup, adjust the throttle to 1700 rpm.

(4) Adjust INTENSITY and FOCUS as desired.

(5) Adjust the NORM. SW. POSITION control so that the left end of the trace line starts on the short vertical line at the left edge of the scope.

(6) Adjust the LENGTH control to obtain a horizontal trace that just touches each of the short vertical lines on the left and right edges of the scope. It may be necessary to repeat step 5.

(7) Place the sweep switch to EXPAND.

(8) Adjust the EXPAND SW. POSITION so that the left end of the trace line starts on the short vertical line at the left edge of the scope.

(9) Place the condition switch to S, and the sweep switch to NORM. The pulse pattern should appear on the trace line.

(10) Rotate the cycle switch one complete revolution in a clockwise direction. The pulse pattern should move from right to left. If the pulse pattern moves from left to right, reset the CW-CCW to the opposite position.

(11) Place the condition switch at V.

(12) Move the vibration pickup selector switch to each cylinder position and check for a suitable amplitude so that each pattern may be adequately observed. The amplitude may be adjusted by moving the control marked VIB. GAIN.

Note

The correct dial plate should be installed on the cycle switch and vibration pickup selector switch prior to operation of the analyzer.

(13) Place the sweep switch to NORM.

(14) Place the condition switch to R.

(15) Adjust IGN. GAIN for a suitable amplitude.

c. Analyzer timing.

CAUTION

Prior to timing the analyzer to the engine, the magneto to be used as a reference should be checked for correct timing to the engine and retimed if necessary. Accurate results from the analyzer depend upon magneto-to-engine timing as the analyzer is timed to the magneto and not the crankshaft.

(1) Pulse pickup method.

(a) Place the condition switch to S.

(b) Place the sweep switch to NORM.

(c) Set the SYNCH. GAIN full clockwise.

(d) Adjust the throttle so the engine is operating at 1700 rpm with a minimum CHT of 180°C.

(e) Holding the cycle switch ignition pointer

(0 on the cycle switch) to the No. 1 cylinder position, insert a screwdriver blade in the slotted control in the cycle switch. Turn the control until the shorted secondary pattern is located near the left end of the trace line.

(f) Place the sweep switch to EXPAND.

(g) Make a final timing adjustment by locating the shorted secondary pattern so that it aligns precisely with the long vertical mark on the scope.

(h) Rotate the cycle switch one complete turn to determine that there is only one shorted secondary pattern. If there is more than one, make certain the analyzer was properly timed to the engine by opening the lead and producing an open secondary. The open secondary should align precisely with the long vertical mark on the scope when the cycle switch ignition pointer is at the No. 1 cylinder position.

5-99. REASONS FOR REMOVAL OF ENGINES. The life of airplane engines between overhauls is dependent on many factors such as the quality of manufacture or overhaul, type of operation being accomplished, and the degree and quality of preventive maintenance accomplished by using activity. Based on service experience, engineering records, etc, the expected life span between overhauls of current engines is shown in the applicable technical order for airplane maintenance transfer procedures and removal of engines. It is revised periodically to show the higher engine life expectancy between overhauls as improvements in engine design and maintenance procedures are effected. During inspections at overhaul depots, it has been found that many engines are changed needlessly. Except in cases of obvious failure, such as a complete internal failure, or when the time between overhauls has been reached, engines will not be removed until a complete investigation of the engine has been made by a competent engine conditioning team.

5-100. SUDDEN STOPPAGES OF ENGINES. Sudden stoppage is defined as a very rapid stoppage of the engine by one or more of the propeller blades hitting an object in such a manner that the engine rpm goes to zero and is not regained. When sudden stoppage occurs, internal damage such as cracked gear teeth, crankshaft misalgnment, damaged bearings, etc, may result. Engines reported to have encountered sudden stoppage will be changed.

5-101. SUDDEN REDUCTION IN SPEED (PROPELLER STRIKING A SMALL MOVABLE OBJECT). A sudden reduction in speed is defined as a rapid reduction in engine rpm occuring when one or more of the propeller blades strikes a small movable object, such as a tool box; the engine, however, continues to run and recovers its former rpm. Engines reported to have encountered reduction in speed will be thoroughly inspected as follows:

a. Remove and inspect the engine oil screen or filters for the presence of metal particles. The engine sump plugs will be removed, and the oil drained into a clean container and strained through a clean cloth to check for metal particles. If heavy metal particles are found, indicating a definite engine failure, the engine will be removed. However, if metal particles in the nature of filings are found, continued inspection of the engine to determine its serviceability will be accomplished. .

b. Check the propeller shaft for misalignment. A reversible, dial-type test indicator, graduated in divisions of 1/1000 inch, shall be clamped to the nose section of the engine and the propeller shaft checked for runout at both the front and rear propeller cone seat locations. Propeller shafts will be checked for runout by turning the crankshaft with a suitable turning bar. Prior to making the runout check, the front or rear spark plugs will be removed from all cylinders. If the runout of the propeller shaft at the front cone seat location is more than 0.008 full indicator reading, the engine will be removed. If the runout of the propeller shaft at the front cone seat location is less than 0.008 full indicator reading, a check will be made at the rear seat location. If any runout is found at this location which is not in the same plane as the runout at the front cone seat location, the engine will be removed. If the propeller shaft runout does not exceed the foregoing specified limits, a serviceable propeller will be installed and an additional check will be made by tracking the propeller at the tip in the same plane, perpendicular to the axis of rotation, to assure that the blade track tolerance is within the limits of 0.441 inch.

c. The engine will be operated and checked for smoothness of operation and power output. If the engine operates properly during the ground check, it will be shut down and the procedures outlined in step a will be repeated. If there is no indication of heavy metal particles in the engine, it will be given a 2-hour flight test. If the engine operates properly during the flight test, it will be checked again for metal in the oil system. If no further indication of metal is found after the flight test, the engine will be considered serviceable. However, the oil screens and magneto sump plugs will be rechecked for the presence of metal after 10 hours of operation and after 20 hours of operation. If no indication of internal failure is found after 20 hours of operation, the engine will require no further special inspections.

5-102. SUDDEN REDUCTION IN SPEED (PROPELLER STRIKING AN IMMOVABLE OBJECT). When an engine is operating and the propeller rpm is suddenly reduced by the propeller striking an immovable object, such as the ground, ramp, a building, or the runway, replace the engine.

5-103. METAL PARTICLES IN OIL. Generally, metal particles on the engine oil screens are an indication of a partial internal failure of the engine. However, due to the construction of airplane oil

systems, it is possible that metal particles may have collected in sludge in the oil system at the time of a previous engine failure; consequently, this must be taken into account when metal particles are found in the engine oil screens or sump plugs. Frequently, carbon tends to break loose from the interior of the engine in large pieces which have the outward appearance of metal. However, carbon can be distinguished from metal by placing the foreign material on a flat metal object and hitting it with a hammer. If the material is carbon, it will disintegrate when struck with a hammer, whereas metal will either remain intact or change shape, depending on the malleability of the metal. Before removing an engine for suspected internal failure as indicated by foreign material on the oil screens or oil sump plugs, collect all obtainable metal particles for analysis and samples. In order to save fine metal particles, it may be necessary to strain the oil through a cloth. The cloth and metal particles can be placed in a clean metal container and sent with the engine to overhaul.

CAUTION

An oil-soaked rag can very easily cause spontaneous combustion unless placed in a tightly closed container, such as a quart or pint can with a press-fit lid.

5-104. IDENTIFICATION OF METAL PARTICLES. Metal particles found in an engine may be any of five kinds: steel, tin, aluminum, silver, and copper (or bronze). A visual inspection as to color and hardness will occasionally be sufficient to determine the kind of metal present. When visual inspection does not positively identify the metal, the kind of metal present may be determined by a few simple tests performed with a permanent magneto, electric soldering iron, and approximately 2 ounces each of concentrated hydrochloric (muriatic) acid and concentrated nitric acid, as follows:

WARNING

Exercise care in handling the acids.

a. Steel particles can be isolated by means of a permanent magnet.

b. Tin particles can be identified by their low melting point. The soldering iron should be cleaned, heated to about 260°C (500°F), and tinned with 50-50 solder (50 percent lead and 50 percent tin). Wipe off the excess solder. A tin particle dropped on the heated iron will melt and fuse with the solder. Care should be exercised to avoid excessive overheating of the iron during this test.

c. Aluminum particles may be identified by their reaction with hydrochloric acid. When a particle of aluminum is dropped into hydrochloric (muriatic) acid, it will fizz with a rapid emission of bubbles. The particle will gradually disintegrate and form a black residue (aluminum chloride).

d. Silver and copper (or bronze) may be identified by their respective reactions in nitric acid. When a silver particle is dropped into the nitric acid, it will react rather slowly, producing a whitish fog in the acid. When a particle of copper (or bronze) is dropped into the nitric acid, it will react producing a bright green cloud in the acid. There is no need in this instance to separate the copper from the bronze.

5-105. SIGNIFICANCE OF METAL PARTICLES. Generally, when metal particles are found and the kind of metal present is determined, the serviceability of the engine will depend upon the quantity and the form of the metal. Granular metal particles, in any amount greater than a trace, require a very careful inspection of the engine, as the presence of these particles is usually an indication of an impending part failure. Each kind of metal, however, will be judged individually. Paragraphs 5-106 through 5-113 are intended as a guide in judging the serviceability of the engine after the kind of metal has been determined.

5-106. STEEL PARTICLES. When steel particles are found in splinter or in granular form, engine removal is required. Thin steel flakes, when found in quantities not greater than 20 flakes, may not require engine removal. A small quantity of steel flakes will not cause engine bearing failure. When thin steel flakes accompanied by aluminum flakes are found, these flakes are probably the result of a warped piston ring land or hole burned in a piston. Replacement of the defective piston and cylinder assembly will correct the difficulty. When not accompanied by aluminum flakes, it is possible that the steel flakes are from foreign material introduced into the engine through the oil tank.

a. Test the engine in accordance with paragraphs 5-112 and 5-113. If more than five additional flakes are found during the oil screen and sump inspection after runup, engine removal is required. If five or less flakes are found, the engine may be released for service as stated in paragraphs 5-112 and 5-113. When not more than 20 thin steel flakes are found, and they are accompanied by thin aluminum flakes, the following will be accomplished:

b. Carefully inspect the cylinders by a visual examination of the cylinder bore and by a compression check in an effort to locate the faulty piston. A bright streak along the cylinder barrel or any evidence of scuffing would be an indication of a warped piston ring land. Warped lands are predominant in winter operations and occur most frequently on lower cylinders.

c. After the faulty cylinders have been changed, or

when no faulty cylinders are found, test the engine in accordance with instructions contained in paragraphs 5-117 and 5-118.

d. If more than two additional steel flakes or 15 aluminum flakes are found during the screen and sump inspection after the engine runup, removal is required. If less than these quantities are found, the engine may be released for service as stated in paragraphs 5-112 and 5-113.

Note

Ring fuzz may be on the oil sump plug of any normal engine. These very fine, hairlike particles are the result of normal seating of the piston rings and cylinders, and are not a cause for concern regarding the serviceability of the engine.

5-107. TIN PARTICLES. Any quantity of tin may be disregarded. Since tin is used only in plating engine parts, and in thickness not greater than 0.0005 inch, granular tin will not be found.

5-108. ALUMINUM PARTICLES. The presence of aluminum particles in granular form may be an indication of piston failure. When granular aluminum particles are found, the following procedures will be accomplished.

a. Inspect the cylinders by visual examination of the cylinder bores, and make a compression check in an effort to locate a faulty piston.

b. When faulty pistons are found, the faulty piston and cylinder assemblies will be changed before continuing with the procedure. After faulty pistons and cylinder assemblies have been changed, or when no faulty pistons are found, continue with the procedure.

c. Drain the oil system, flush the oil tank, and clean the oil screens.

d. Test the engine as described in paragraphs 5-112 and 5-113.

e. If not more than two additional granular particles are found during the screen and sump inspection after runup, the engine may be released for service as stated in paragraphs 5-112 and 5-113. If more than five particles are found, the engine will be removed.

5-109. ALUMINUM FLAKES. Aluminum flakes may not necessarily require engine removal. In winter operations, when warped piston ring lands are frequent, considerable quantities of aluminum from the pistons may be discharged into the engine oil system. It will be necessary to exercise judgment before continuing with the following procedure; for instance, if the oil sump or screen is found choked with a mass of aluminum flakes or particles, regardless of size, it will probably be necessary to remove the engine even though the faulty piston can be located. When aluminum flakes are found, the following procedures will be accomplished.

a. Make a careful inspection of the cylinders by examination of the cylinder bores, and make a compression check in an effort to locate the faulty piston.

b. When not more than two faulty pistons are found, the faulty piston and cylinder assemblies will be changed before continuing with the procedure. When more than two faulty pistons are found by inspection, the engine will be removed. If two or less faulty pistons are found, continue with the procedure.

c. Drain the oil system, flush the oil tank, and clean the oil screen.

d. Test the engine in accordance with instructions in paragraphs 5-112 and 5-113.

e. If more than five additional aluminum flakes are found during the screen and sump inspection after runup, engine removal is required. If less than this quantity is found, the engine may be released for service as stated in paragraphs 5-112 and 5-113.

5-110. SILVER PARTICLES. Silver particles in granular form indicate a master rod bearing failure in advanced stages. When these particles are found in any quantity, engine removal is required. Silver is used in plating numerous other parts, and silver flakes, not exceeding 10 in number, do not necessarily indicate a part failure. Since silver is quite soft, some small flakes will occasionally be released by the normal working of these parts. A very small quantity of silver from the master rod bearings will make a large number of tiny flakes as it passes through roller bearings or gears within the engine. Large quantities of silver flakes indicate an excessive loss of bearing or plating material, and the engine will be removed as a precautionary measure.

5-111. COPPER OR BRONZE PARTICLES. Copper or bronze particles in granular form, and in quantities greater than a few particles, indicate disintegration of a bushing or valve guide, and are cause for engine removal. Copper or bronze flakes, in quantities not exceeding 10 flakes, do not necessarily indicate a part failure. Bronze flakes may be formed in small quantities through normal seating of bushings or valve guides. Larger quantities of copper or bronze flakes, however, may indicate excessive loss of bushing material, and the engine will be removed as a precautionary measure.

5-112. ENGINE TEST FOR METAL PARTICLES. The external oil system will be drained and flushed in accordance with this handbook for decontamination of the airplane engine oil system and accessories and the tank refilled. When it is required that the engine be subjected to a further examination for metal particles, the test procedures given in paragraph 5-113

vill be followed. This will insure that an engine eleased for service after examination for metal par- icles will continue to operate satisfactorily.

-113. ENGINE TEST. This test is made for the urpose of subjecting the engine to sufficient opera- ions to cause any additional metal in the oil system o collect on the screen and in the main sump, and lso to reveal any incipient trouble. This additional etal will determine whether the engine needs to be emoved or allowed to continue in service.

a. Run the engine for 10 minutes at 2000 rpm to ring it to proper operating temperatures, and make minimum of three power checks. (Allow the engine o cool between checks.) Take care not to exceed the llowable limits for ground operation for the engine.

b. Again remove the oil screen and examine for etal accumulation. Remove the main sump plug and rain the sump, using an approved screen. Examine e plug and screen for metal accumulations. If the ngine is released for service, it will be watched losely for the next 25 hours for any indications of alfunction or internal failure.

-114. IN-SERVICE PARTS FAILURES. If all the ieces of a steel part which has failed, such as a piston ng, valve, valve spring, washer, rocker arm, rocker m bearing, etc, cannot be located and removed, the gine will be replaced. Otherwise, particles from part will induce failure in other parts within the gine and may result in serious damage.

-115. LOW CYLINDER COMPRESSION. An en- ine may be removed for low cylinder compression if e number of cylinders with below minimum com- ression exceeds the number in table 5-5.

-116. BASIC MECHANICAL FAILURES. An en- ne may be removed when an internal or external rtion of the engine, such as an impeller, boss, cast- g, threads, studs, etc, become cracked, nicked, brok- , or damaged to the extent that repair cannot be ade in the field and depot assistance is not available. ilures of this type are limited to portions of the gine such as the impeller, impeller clutch, crank- se, supercharger housing, and the reduction gear using.

-117. ENGINE OVERSPEEDING. When engine eeds exceed the limits specified in pertinent opera- onal instructions, the engine will be inspected or moved, depending upon the amount of overspeed ported, as follows: If the engine exceeds 3100 rpm, t is less than 3300 rpm, the engine will be inspected set forth in paragraphs 5-118 through 5-120. If engine exceeds 3300 rpm, the engine will be re- ved.

-118. ENGINE INSPECTION. Inspect for cracked or broken cylinder heads and barrels. In the event a cylinder head is cracked or broken, or a peened piston head is found on an engine and no particles of pistons or rings have entered the power section of the engine, the cylinders and piston assembly for the cylinders with the cracked heads will be removed and the articulating and master rods inspected for misalignment. If the rods are satisfactory, the piston and cylinder assemblies will be replaced with serviceable units and the engine continued in service as specified in paragraph 5-120. In any case of misalignment of the link or master rods, the engine will be replaced.

5-119. OIL SYSTEM INSPECTION.

a. All sump plugs and removable oil screens will be removed and thoroughly inspected for metal particles.

b. All oil sumps will be drained, using a clean cloth to catch any particles that may be present in order that they may be inspected.

c. Care will be exercised to insure that particles inspected are metal and not carbon particles. Should the inspection of the oil strainer disclose any abnormal amount of metal particles, the engine will be removed immediately and forwarded to the designated AMA for overhaul. When no metal particles are found, the engine will be operated as specified in paragraph 5-120.

5-120. OPERATION SUBSEQUENT TO INSPECTION. When inspection of the engine discloses no visible damage as a result of overspeed or over maximum allowable manifold air pressure (MAP), the engine will be run until normal temperatures are attained. With all systems indicating normal, advance power to 40 inches mercury MAP for a period of two minutes. Reduce power, cool engine, and shut down. Remove the oil screen, disassemble and inspect as outlined in paragraph 5-119 above. If abnormal metal particles are not found, using paragraph 5-105 as criteria, restrict the aircraft to local flight and fly engine on a red dash condition for a minimum of one hour. Re-inspect oil system screens as before. Should this inspection prove satisfactory, release aircraft for normal flight operation.

5-121. SPARK PLUG COPPER RUNOUT. If copper runout is noted, the cylinder from which the spark plug was removed will be replaced as this indicates that temperature in the cylinder has exceeded 1083°C (1981.4°F). The engine will be inspected to locate the reason for excessive temperature, and the oil strainer and sump plugs will be checked for metal particles. Engines found to have spark plug copper runout on more than 25 percent of the cylinders will be removed from service as the engine has been subjected to excessive heat that may cause engine failure.

CAUTION

Carbon deposits must not be confused with copper runout.

5-122. EXCESSIVE MANIFOLD PRESSURE. When manifold pressures above the recommended value specified in the Flight Manual occur, it will be considered an overboost and the following will be used to determine the necessary action.

a. From 1 to 5 inches Hg for periods up to 5 seconds, no action required.

b. From 5 to 10 inches Hg for periods of 5 to 15 seconds, inspection as outlined in paragraph 5-123.

c. Ten inches Hg or more for any period of time requires removal of the engine.

d. Overboost of any magnitude for periods in excess of 15 seconds requires removal of the engine.

5-123. ENGINE INSPECTION FOR OVERBOOST CONDITION.

a. Perform cylinder compression test.

b. Replace spark plugs.

c. Inspect engine for cracked or broken cylinder heads and barrels. If a cracked head or barrel is found, it should be removed and the rods checked for misalignment.

SECTION VI

FUEL SYSTEM

6-1. FUEL SYSTEM.

6-2. GENERAL DESCRIPTION. Fuel is supplied from two main tanks and two auxiliary tanks mounted in the center wing of the airplane *(see figure 6-1.)* The fuel quantity is measured by the liquidometer system which consists of a float assembly and a liquidometer tank unit in each tank, electrically connected to the fuel gage located on the right instrument panel in the flight compartment. There are two tank selector valves, operated by dial and handle controls in the flight compartment. Under normal conditions, the left engine draws fuel from the left tanks, and the right engine draws fuel from the right tanks, but by using the selector valves, fuel may be supplied from any tank to either engine *(see figure 6-2.)* Pipes lead from the selector valves to the two hand-operated wobble pumps. These pumps are used to raise the fuel pressure when starting the engines, or before the engine-driven pumps are in operation. The fuel flows from the wobble pumps through pipes to the strainers, located in each nacelle, the engine-driven pumps, and to the carburetor *(see figure 6-2)*. A cross-feed pipe is connected on the pressure side of each engine-driven pump, and the two cross-feed valves in this pipe are operated by a single control in the flight compartment. The cross-feed system enables both engines to receive fuel from one engine-driven pump in case either pump fails. On late C-47A, C-47B, and C-117 series airplanes, the wobble pumps are replaced by two electrical booster pumps, with the fuel strainers located in the system just ahead of the booster pump *(see figure 6-3)*.

Note

Some early C-47 aircraft have been modified and are equipped with electrical fuel booster pumps.

Each fuel strainer is located in the center wing near each selector valve. The fuel flows from the selector valves, through the strainers, the booster pumps, and the engine-pumps into the carburetor. On airplanes equipped with electric booster pumps, there is no cross-feed system. The booster pumps will furnish ample pressure and supply adequate fuel for operation of the airplane in case either engine-driven pump fails. Operation of the fuel selector valves remains the same. A vapor overflow pipe connects from the top chamber of the carburetor to the main tanks, and a fuel pipe from the back of each carburetor operates the fuel pressure gage in the flight compartment. This pressure gage normally shows from 16 to 18 pounds pressure. On some airplanes, a pressure warning switch is installed in the fuel pressure gage pipe. When the fuel pressure drops below 12 pounds, the pressure warning switch operates a warning light in the flight compartment. A restricted fitting on the fuel pressure gage pipe connects to an oil dilution solenoid which releases fuel into the engine oil system and the propeller feathering oil. Another solenoid valve in the fuel pressure gage pipe releases fuel into the eight upper cylinders of the engine for priming. The engine primer solenoid is mounted either in the nacelle near the fuel strainers, or on the firewall next to the oil dilution solenoid. On some airplanes, a hand primer in each nacelle is used in place of the primer solenoid valve. Vent pipes from each tank vent overboard, and a vapor pipe connects each main tank with its corresponding auxiliary tank.

6-3. TROUBLE SHOOTING OF FUEL SYSTEM. Trouble shooting of the fuel system is accomplished as outlined in table 6-1.

TABLE 6-1

TROUBLE SHOOTING - FUEL SYSTEM

TROUBLE	PROBABLE CAUSE	REMEDY
a. Lack of fuel pressure.	No fuel in tanks.	Fill fuel tanks.
	Broken or disconnected pipes.	Repair or replace pipes.

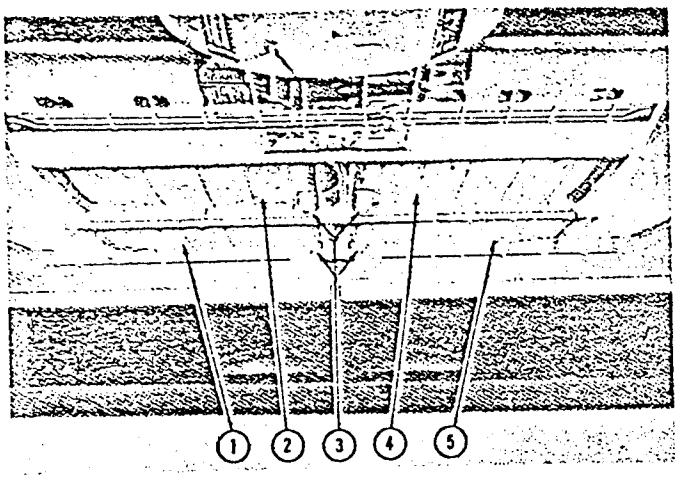

33,075

Figure 6-1. Fuel Tanks Installed

Key to Figure 6-1

Item	*Nomenclature*
1.	Right Auxiliary Tank
2.	Right Main Tank
3.	Water Collecting Sumps
4.	Left Main Tank
5.	Left Auxiliary Tank

TABLE 6-1 (Continued)

TROUBLE	PROBABLE CAUSE	REMEDY
a. *(Continued)*	Fuel tank selector valve not in correct position.	Turn control handle to proper position, check adjustment of controls (see paragraph 6-9). Check condition of selector valve (see paragraph 6-11).
	Clogging of fuel pressure gage pipes or main fuel pipes.	Disconnect pipes and blow through them.
	Clogging of fuel tank vent pipes.	Disconnect fuel vent pipes and blow through them.
	Cuts in pipes due to clamps, screws, or bolts.	Repair or replace pipes.
	Malfunctioning of engine-driven pump, such as ruptured diaphragm, or sheared drive shaft.	Check engine-driven pump and replace if necessary.
	Clogged fuel strainer.	Clean strainer.
	Bottom plate on fuel strainer loose.	Tighten plate and safety wing-nut.
	Clogged restrictor fitting.	Clean fitting.
b. Low fuel pressure.	Defective fuel pressure indicator.	Replace fuel pressure indicator.
	Damaged fuel selector valve.	Replace fuel tank selector valve.
	Loose pipe connection.	Tighten fittings.
	Improperly adjusted engine-driven fuel pump.	Adjust as outlined in paragraph 6-43.
	Clogging of fuel pipes.	Disconnect pipes and blow through them.
	Malfunctioning of engine-driven pump.	Check drainpipes on pump for leakage or stoppage. Clean pipes or replace pump.

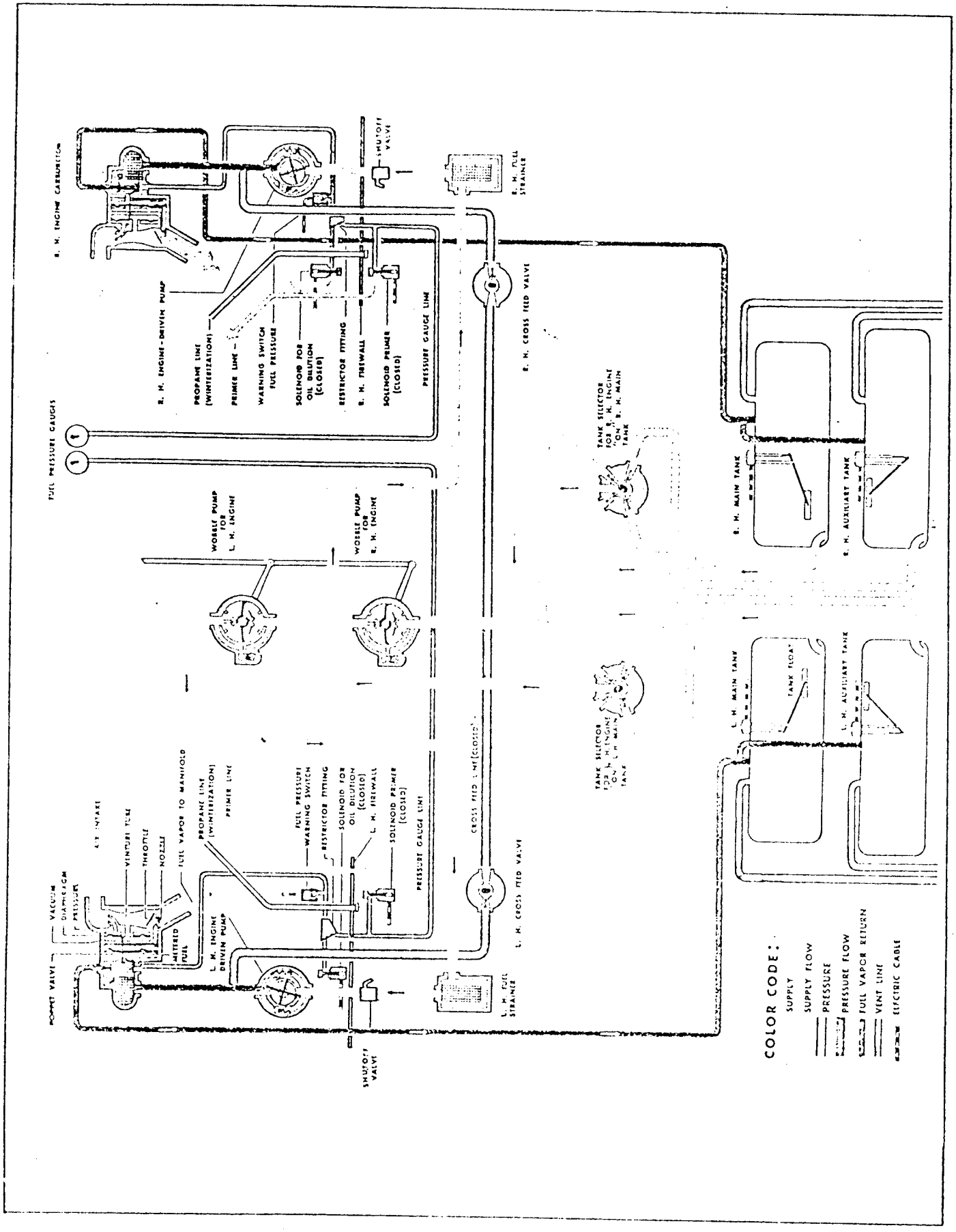

Figure 6-2. Fuel System Schematic Diagram

19,140

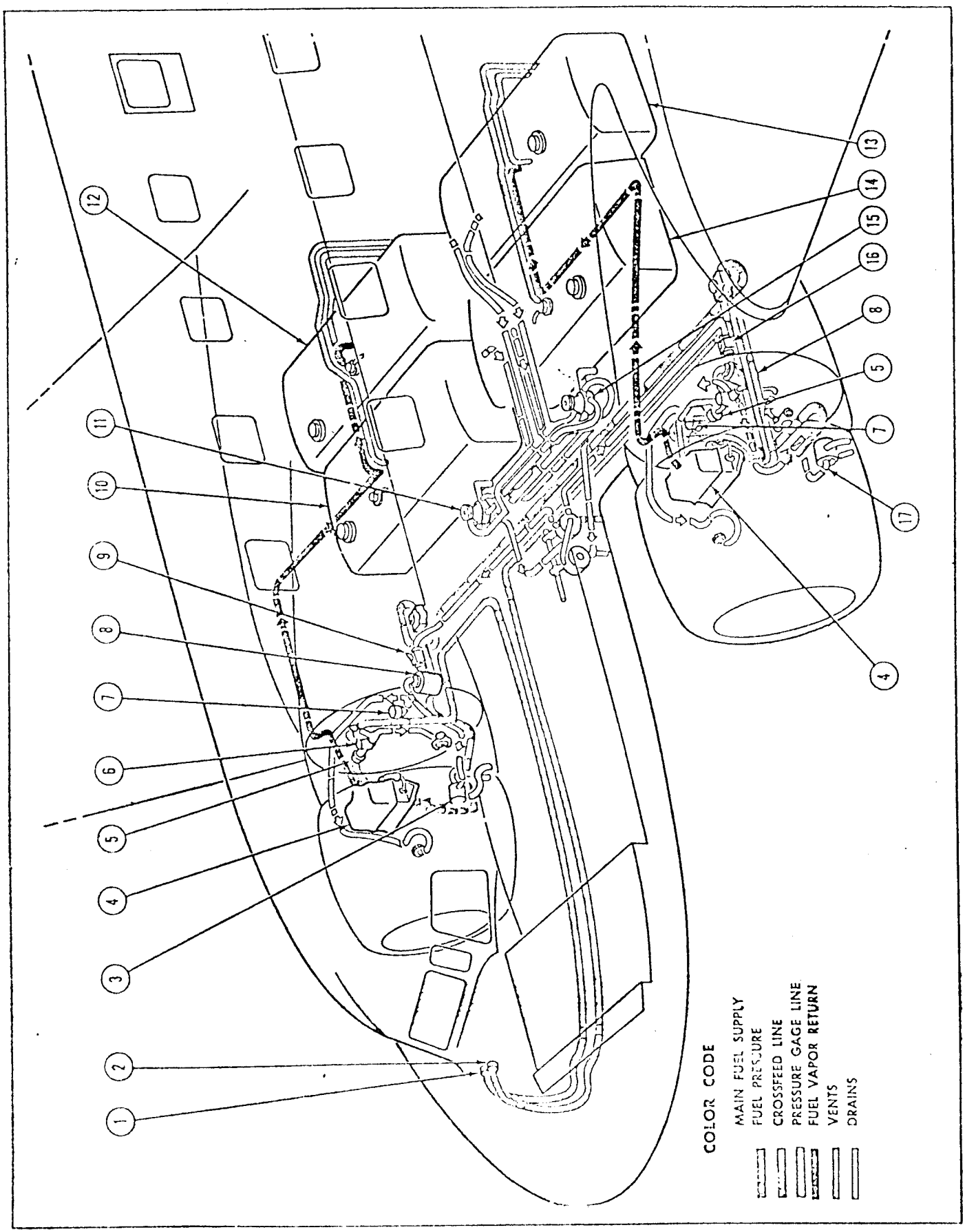

19.134

Figure 6-3. C-47 Fuel System Flow Diagram

TABLE 6-1 (Continued)

TROUBLE	PROBABLE CAUSE	REMEDY
b. *(Continued)*	Fuel leakage through engine primer or oil dilution pipes.	On airplanes equipped with hand primer, check that primer is closed. On other airplanes, see paragraph 6-76.
	Clogged fuel strainer.	Disassemble and clean fuel strainer.
	Clogged restrictor fitting.	Clean fitting.
c. High fuel pressure.	Improper setting of pressure adjusting screw on engine-driven pumps.	Adjust as outlined in paragraph 6-43.
	Failure of bypass valve on engine-driven pump. (Indicated by normal fuel pressure at idle speed with an increase to extreme high pressure as rpm increases.)	Replace engine-driven fuel pump.
	Clogging of carburetor return pipe.	Clean pipe.
d. Improper carburetion.		See Section IV.

6-4. REMOVAL AND INSTALLATION OF FUEL SYSTEM COMPONENTS.

6-5 MAIN AND AUXILIARY FUEL TANKS.

(See figures 6-4, 6-5, and 6-6.)

6-6. The tanks are constructed by welding together an upper and lower shell of 3003 half-hard aluminum sheets or 3S0 aluminum sheets. A plug-screw assembly that contains a water collecting sump *(3, figure 6-1)* and a drain cock *(see figure 6-5)* is located at the bottom of each main and auxiliary tank. The plug-screw assemblies are removed with a special gas tank sump drain wrench *(see figure 6-6)*. On late C-47B and C-117 series airplanes the drain cock does not require the use of safetywire. A cartridge containing potassium chromate crystals is placed in each sump to prevent corrosion. Remove, clean, and refill the cartridges with potassium chromate crystals every 6 months. An electric liquidometer unit in the top of each tank connects to an indicator on the right side instrument panel in the flight compartment. The two main tanks, each with a capacity of 202 gallons, are mounted in the center wing of the airplane between the front and center spars on each side of the airplane centerline *(see figure 6-1)*. The auxiliary tanks, with a capacity of 200 gallons each, are mounted directly aft of the main tanks between the center and rear spars *(see figure 6-1)*. The tanks are supported by a padded cradle assembly *(see figure 6-1)* which is fastened to the center wing by 2024-TAL straps. Clips are installed on the filler neck assembly to prevent leakage of fuel past the rubber seals on the main and auxiliary fuel tank filler necks.

Key to Figure 6-3

Item	*Nomenclature*	*Item*	*Nomenclature*
1.	Fuel Pressure Gage	10.	Main Fuel Tank RH
2.	Fuel Pressure Gage	11.	Selector Valve Assembly RH
3.	Fuel Pump RH	12.	Auxiliary Fuel Tank RH
4.	Carburetor	13.	Auxiliary Fuel Tank LH
5.	Restricted Fittings	14.	Main Fuel Tank LH
6.	Oil Dilution Solenoid Valve	15.	Selector Valve Assembly LH
7.	Engine Primer Solenoid Valve	16.	Shutoff Valve LH
8.	Fuel Strainer	17.	Fuel Pump LH
9.	Shutoff Valve RH		

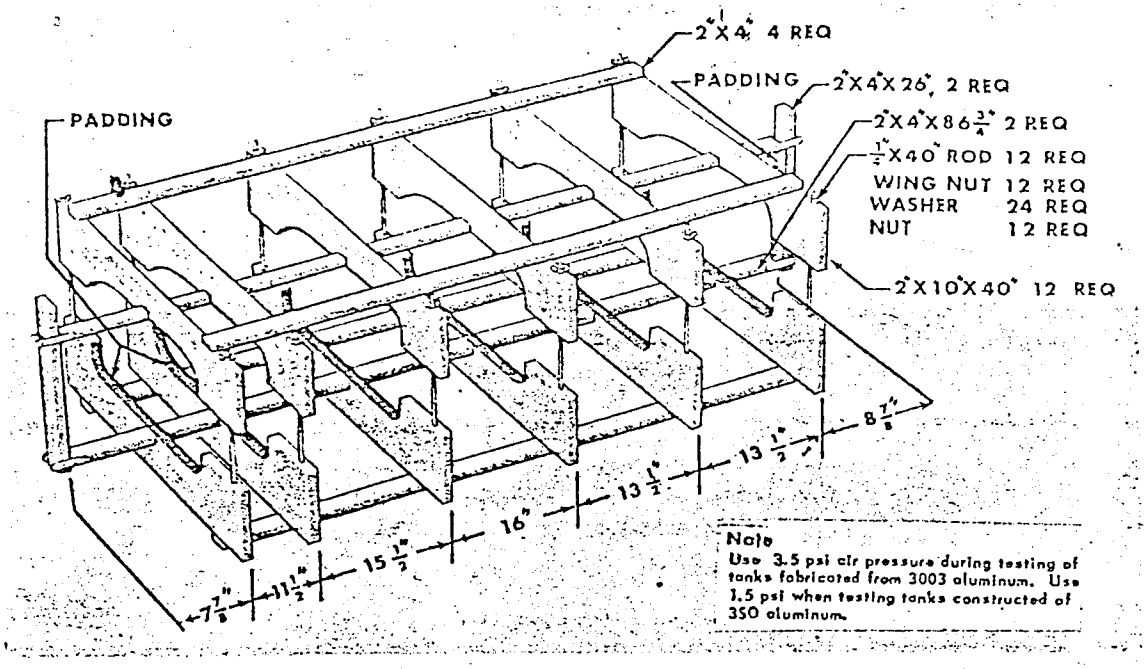

V2-3

Figure 6-4. Jig for Pressure Testing of Metallic Fuel Tanks

6-7. REMOVAL OF MAIN AND AUXILIARY FUEL TANKS.

a. Drain all fuel from the tank.

b. Remove the top plate *(3, figure 6-7)* from around the filler neck by removing the screws.

c. Remove the access doors *(2, figure 6-7)* and disconnect the vent pipes, the carburetor return pipe, and the liquidometer tank unit wiring.

d. Remove the bottom plate from the wing center section under the tank by removing the parapack attach brackets, the screws on the spar at the front and rear ends of the plate, and the bolts in the flanges at the sides of the plate.

e. Disconnect the electrical bonding braids from the tank bay.

CAUTION

Do not disconnect the bonding braids from the tank and do not fasten the disconnected bonding braids together, as there is danger of damaging the soldered tank connection or pulling the bonding braids loose.

f. Remove the screws from the forward and aft ends of the tunnel cover, and remove the cover. This operation exposes the main fuel pipes.

g. Disconnect the main fuel pipe at the tank fitting and at the tee on the pipe leading to the selector valves. Remove this section of the fuel pipe.

h. Remove the fuel pipe fitting from the tank.

Note

On some airplanes, a flexible conduit is installed for the fuel quantity gage wiring. On this installation, reach inside the front part of the tank compartment and unscrew the collar on the flexible conduit, and pull out the conduit and wires.

i. With two men supporting the tank, unscrew the turnbuckles in the tank support straps and lower the tank.

j. When cleaning the fuel tanks with an approved solvent, make certain that the tanks are properly vented at all times to prevent expansion.

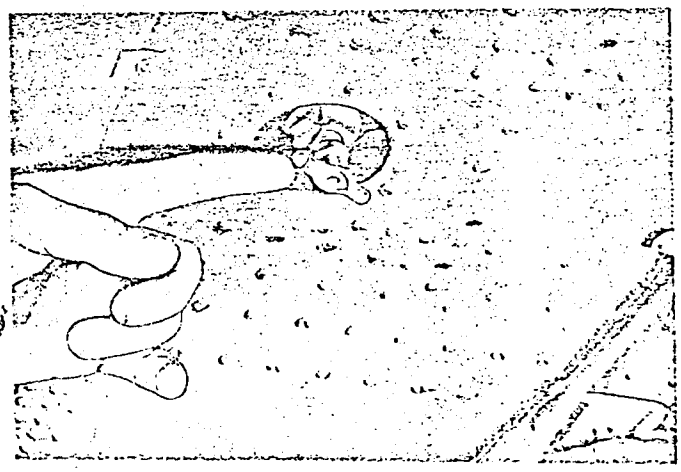

33,077

Figure 6-5. Fuel Tank Drain Cock

WARNING

If the tanks have been exposed to the sun or high temperatures immediately prior to cleaning with solvent, the solvent will vaporize and cause the tank to expand and possibly burst if not vented.

6-8. INSTALLATION OF MAIN AND AUXILIARY FUEL TANKS.

Note

Check all seams in the tank bays. If any of the sealing compound is cracked or loose, remove and seal with sealing compound, Specification MIL-S-7502, or equivalent, before installation.

a. Position the inboard end of the tank in place first, and position one man on top of the wing to connect the carburetor return pipe to the tank fitting *(1, figure 6-7)*. Raise the entire tank into the tank bay; lower the inboard end slightly; push the carburetor return pipe down, align it with the fitting, and connect to the tank.

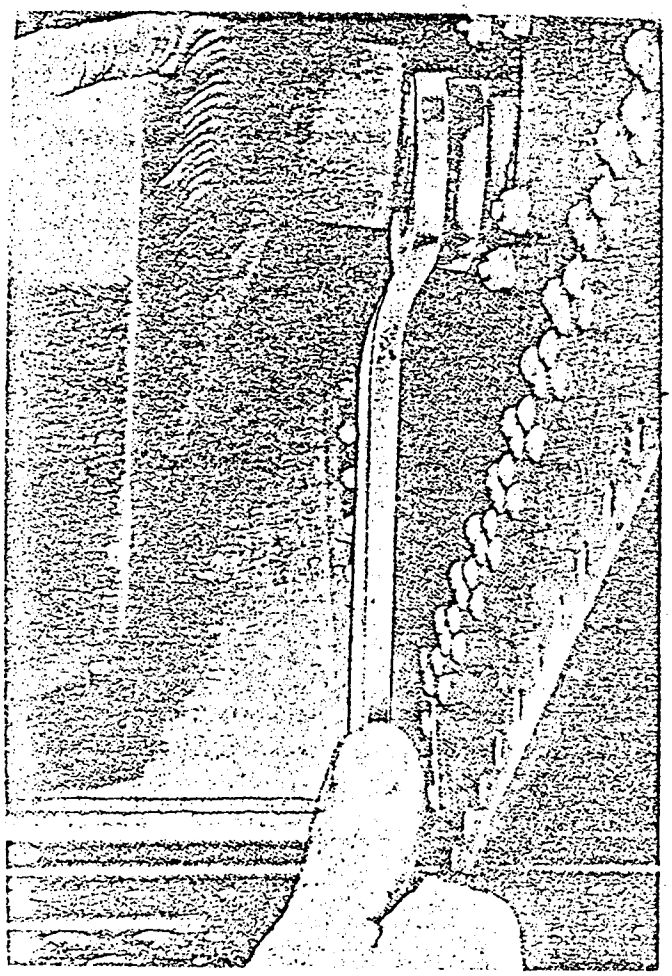

33,487

Figure 6-6. Fuel Tank Sump Drain Wrench in Operation

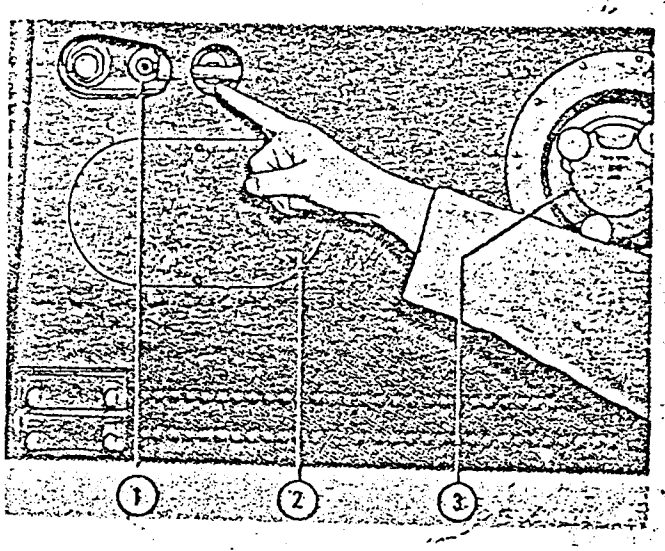

33,078

Figure 6-7. Fuel Tank Fittings on Top of Center Wing

Key to Figure 6-7

Item	Nomenclature
1.	Carburetor Return Pipe Connection
2.	Access Hole
3.	Filter Neck and Returning Ring

Note

This connection must be made as outlined in step a, because it will be very difficult to make the connection after the tank has been completely installed.

b. Tighten the turnbuckles on the tank support straps.

c. Connect the electrical bonding braids to the tank bay.

d. Install the fuel pipe fitting in the tank.

Note

On some airplanes, a flexible conduit is installed for the fuel quantity gage wiring. For this installation, connect the wires and secure the collar of the flexible conduit.

e. Install the main fuel pipe at the tank fitting and at the tee in the pipe leading to the selector valves.

f. Install the cover on the tunnel between the right and left tanks.

g. Install the parapack attach brackets and bolts in the flanges.

h. Working through the access doors, connect the vent pipes and the liquidometer tank unit.

i. Install all access doors. Torque tunnel covers and bottom wing tank plates to 100 ± 10 inch-pounds.

6-9. FUEL FEED SYSTEM.

6-10. FUEL TANK SELECTOR VALVES.

6-11. The fuel tank selector valves *(see figures 6-8 and 6-9)* are four-way valves mounted on the forward face

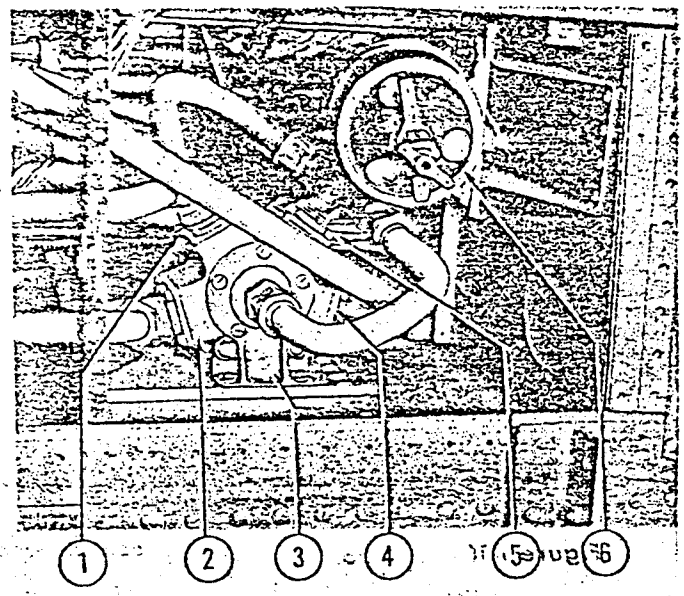

33,079

Figure 6-8. Tank Selector Valve Installed (C-117 Airplanes)

Key to Figure 6-8

Item	Nomenclature
1.	Right Main Tank Port
2.	Right Auxiliary Tank Port
3.	Support Bracket
4.	Left Auxiliary Tank Port
5.	Left Main Tank Port
6.	Fuel Strainer

of the front spar on each side of the airplane centerline. The valves are remotely controlled by means of cables and pulleys attached to the two handle and dial controls *(see figure 6-10)* on the engine control pedestal. Fuel may be supplied from any tank to either engine by use of these valves.

6-12. REMOVAL OF FUEL TANK SELECTOR VALVE.

a. Remove the panel marked TANK SELECTOR VALVE, located near the front of the center wing.

b. Remove the panel located forward of the decal which reads FUEL AND INSTRUMENT LINES.

c. Remove the panel marked DE-ICER UNIT and WOBBLE PUMPS.

d. Cut the safetywire and disconnect the cables at the turnbuckles *(see figure 6-11)*.

e. Remove the pulleys from the two brackets *(see figure 6-11)*.

f. Disconnect all pipes from the selector valve.

g. Remove the bolts from the support bracket, and remove the selector valve from the front spar.

Note

To remove the selector valve only, disconnect the pipes and unscrew the nuts from the two long bolts holding the valve to the small attach bracket at the bottom of the valve. Take out the two bolts securing the attach bracket, and remove the valve.

6-13. MAINTENANCE, REPAIR, AND REPLACEMENT OF FUEL TANK SELECTOR VALVES.

a. Check the selector valve for proper port and cam operation, and for evidence of leakage, corrosion, dirt, damage, or other deficiency.

b. If the valve is leaking, replace all gaskets. If leakage still occurs, replace the valve.

c. Set the valve in the OFF position with the outlet port open. Submerge the valve in gasoline with the outlet port faced up. Apply approximately 10 pounds of air pressure to each port individually. There should be no formation of air bubbles from any port.

d. With the valve in the OFF position, apply gasoline under approximately one pound pressure to the outlet port. Turn the shaft to open each port and expel all the air from the valve.

e. Increase the gasoline pressure to approximately 10 pounds. No leakage should occur from any port.

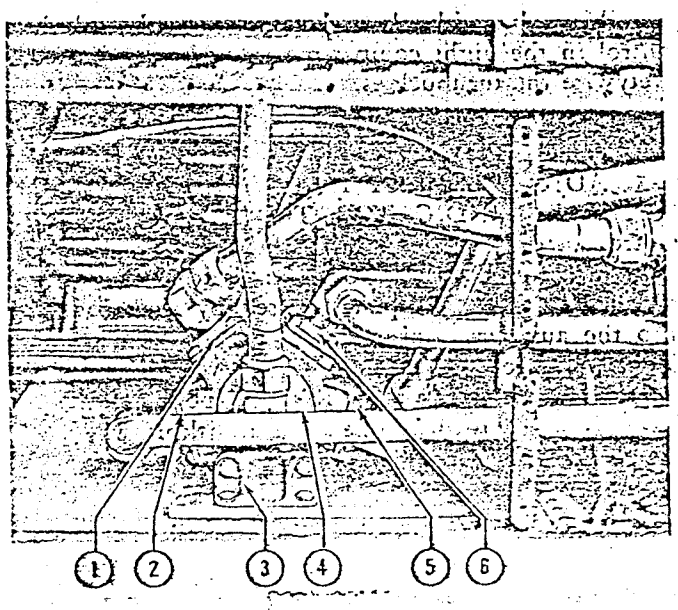

33,080

Figure 6-9. Tank Selector Valve Installed (C-47 Airplanes)

Key to Figure 6-9

Item	Nomenclature
1.	Left Main Tank Port
2.	Left Auxiliary Tank Port
3.	Support Bracket
4.	Plate
5.	Right Auxiliary Tank Port
6.	Right Main Tank Port

f. Reduce the pressure to approximately one pound and operate the valve to each position to check valve function. Repeat step e.

g. Check the control cables for wear. Replace as necessary.

h. Check the pulley brackets and selector valve support brackets for damage. Replace as necessary.

6-14. INSTALLATION OF FUEL TANK SELECTOR VALVE.

a. Position the selector valve on the front spar and install the bolts.

b. Connect all pipes to the selector valve.

CAUTION

When installing the outlet fitting in the bottom of the selector valve, make certain that the fitting does not extend into the bottom of the cap, so that the fitting will bind the valve rotor.

c. Install the pulleys to the two brackets. Be sure that the nut is on top to allow clearance for other cables.

d. Connect all cables.

e. After the cables have been connected, and the control in the flight compartment has been adjusted, safetywire the turnbuckles.

f. Install all panels.

6-15. ADJUSTMENT OF THE FUEL TANK SELECTOR VALVE INDICATOR. The fuel selector valve control system is rigged so that the valve handle is in a detent at the OFF position. This is to prevent fuel leakage within the airplane caused by fuel flowing into the auxiliary tanks so that they overflow. The OFF position of each fuel selector valve, indicated by arrows, must coincide with the OFF position of the fuel selector control handle in the cockpit when in the detent position.

CAUTION

The tank selected by positioning the valve must agree with the indicator. Do not force the indicator. Make adjustments only with the valve-cable turnbuckles.

6-16. CROSS-FEED VALVES.

6-17. A cross-feed valve is located on the inboard side of each nacelle, aft of the fuel strainer *(3, figure 6-12)*. A cross-feed pipe connected to the pressure side of each engine-driven pump connects the two cross-feed

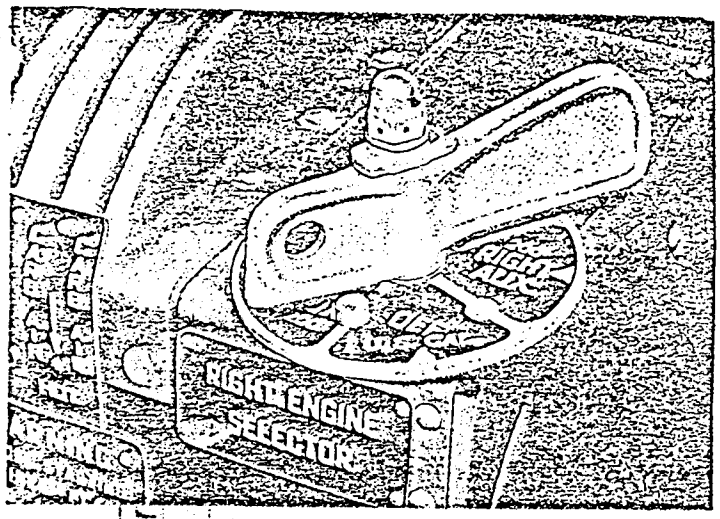

33,081

Figure 6-10. Selector Valve Control

valves. The valves are operated by cables from a single control on the right side of the engine control pedestal *(see figure 6-13)*. In normal operation, these valves are in the OFF position, but in case of failure of one of the engine-driven pumps, the cross-feed valves may be turned ON and the pressure from the operating engine-driven pump will pass through the cross-feed system to supply the inoperative engine.

6-18. REMOVAL OF CROSS-FEED VALVE.

a. Disconnect the inlet and outlet pipes *(see figure 6-14)*.

b. Remove the two bolts holding the lower support bracket to the wall of the nacelle.

c. Move the cross-feed valve down, and disengage the drive pins from the drive plates on top of the valve *(3, figure 6-14)*.

d. Remove the valve.

6-19. MAINTENANCE, REPAIR, AND REPLACEMENT OF CROSS-FEED VALVES.

a. Check the gaskets of the valve port; replace them if necessary.

b. If any other parts are faulty, replace the complete valve.

6-20. INSTALLATION OF CROSS-FEED VALVE.

a. Position the valve and install the drive pins into the drive plates located on top of the valve *(3, figure 6-14)*.

b. Install the two bolts to secure the lower support brackets to the wall of the nacelle.

c. Connect the inlet and outlet pipes.

6-21. REMOVAL OF COMPLETE CROSS-FEED VALVE ASSEMBLY.

a. Remove the panel marked FUEL AND INSTRUMENT LINES.

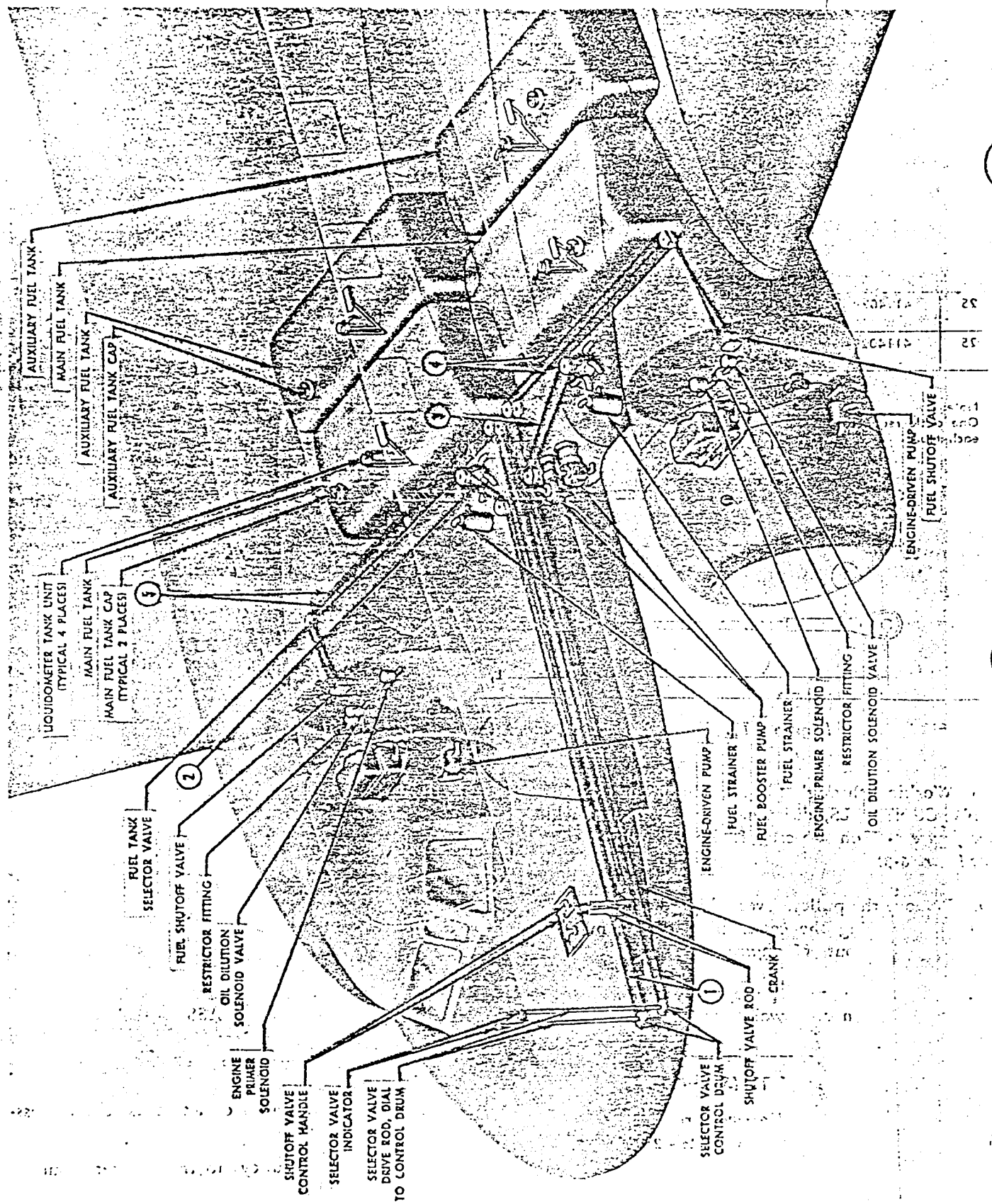

33,082

Figure 6-11. Fuel System Components and Controls - Key Drawing (Sheet 1 of 2)

CABLE ITEM NO.	DOUGLAS CABLE ASSEMBLY DRAWING NO.	TYPE	CABLE LENGTH (L_1)	CABLE LENGTH (L_2)	CABLE SIZE	FITTINGS (1)	FITTINGS (2)	FITTINGS (3)	FITTINGS (4)
21	2119150-4	A	292		3/32 dia 7 x7 flex.	2049220	2049220 16DS-3L		
22	2118297-8	A	104 1/2		3/32 dia 7 x7 flex.	2049220 16DS-3L	2049220 16DS-3L		
23	2118297-6	A	108		3/32 dia 7 x7 flex.	2049220 16DS-3L	2049220 16DS-3L		
24	4114029-43	B	263 7/16	9	3/32 dia 7 x7 flex.	1116245	2049220 16DS-3L	AN165-16S	
24	4114029-45	B	263 7/16	9	3/32 dia 7 x7 flex.	1116245	2049220 16DS-3L	AN165-16S	
25	4114029-47	B	263 7/16	9	3/32 dia 7 x7 flex.	1116245	2049220 16DS-3L	AN165-16S	
25	4114029-49	B	263 7/16	9	3/32 dia 7 x7 flex.	1116245	2049220 16DS-3L	AN165-16S	

Note:
One cable required each type.

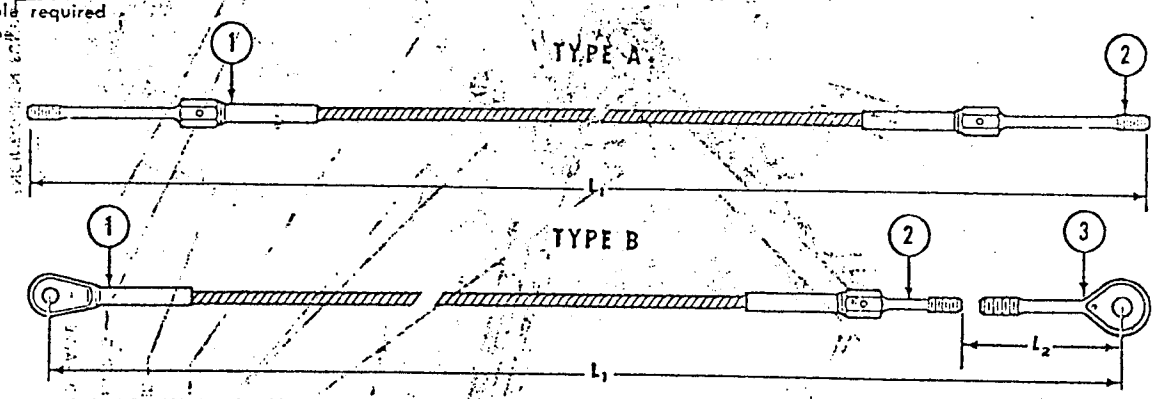

33,083

Figure 6-11. Fuel System Components and Controls - Cable Charts and Cable Assemblies (Sheet 2 of 2)

b. Working through the access door marked ENGINE CONTROLS, disconnect the two turnbuckles *(see figure 6-8)* on the cross-feed valve control cables *(see figure 6-8)*

c. Remove the pulleys over which the upper cables pass, by removing the cotter pin and the nut, and pulling the bolt out *(see figure 6-8)*.

d. Remove the two pulleys from the brackets mounted on the nacelle wall.

Key to Figure 6-11 (Sheet 1 of 2)

Item	*Nomenclature*
1.	Selector Valve Control Cable – 2119150-4
2.	Selector Valve Control Cable – 2118927-8
3.	Selector Valve Control Cable – 2118927-6
4.	Shutoff Valve Control Cable – 4114029-43 4114029-45
5.	Shutoff Valve Control Cable – 4114029-47 4114029-49

e. Pull the cables inside the nacelle.

f. Disconnect the inlet and outlet pipes from the cross-feed valve *(see figure 6-14)*.

g. Remove the four bolts *(1, figure 6-14)* that hold the cross-feed valve support assembly to the nacelle wall.

6-22. INSTALLATION OF COMPLETE CROSS-FEED VALVE ASSEMBLY.

a. Install the cross-feed valve assembly to the nacelle wall with four bolts.

b. Connect the inlet and outlet pipes to the cross-feed valve.

c. Install the two pulleys to the bracket mounted on the nacelle wall.

d. Install the pulley for upper cables.

e. Working through the access doors, connect the two turnbuckles on the cross-feed valve control cables.

f. Install the panel.

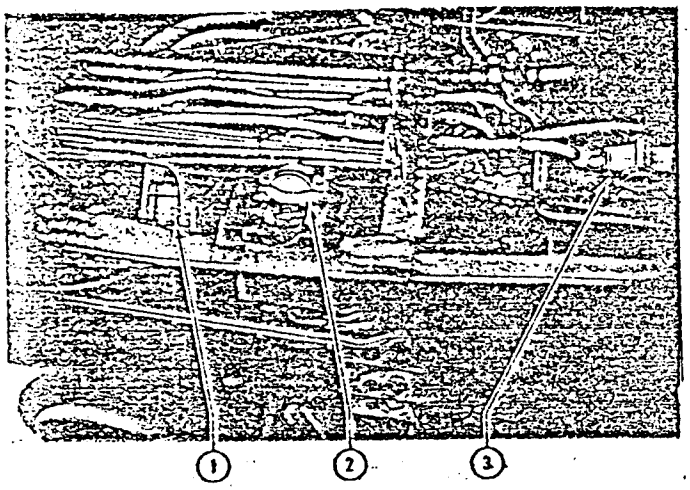

33,084

Figure 6-12. Fuel System Components Inside Nacelle

Key to Figure 6-12	
Item	*Nomenclature*
1.	Engine Primer Solenoid (if installed)
2.	Fuel Strainer
3.	Cross-Feed Valve

6-23. ADJUSTMENT OF CROSS-FEED VALVE INDICATOR.

a. Connect the control cables at the turnbuckles *(see figure 6-8)* inside the access door marked ENGINE CONTROLS and adjust them so that the threads on the turnbuckle bolts are covered.

Note

Do not tighten the cables beyond a light tension.

b. Move the cross-feed valve indicator *(see figure 6-13)* on the control pedestal to a neutral position.

c. While the indicator is in the neutral position, turn the control pulley *(6, figure 6-14)* on top of the cross-feed valve so that the cable stop *(4, figure 6-14)* is directly in line with the bolt boss *(5, figure 6-14)* on the side of the cross-feed valve. The valve is now in the neutral position.

d. Tighten the turnbuckle *(see figure 6-8)* on the upper and lower cables alternately, and adjust the control cables to a 30-pound tension.

e. Move the indicator in the flight compartment to the OFF position *(see figure 6-13)* and check that the cross-feed valve is in the OFF position.

Note

Do not force the indicator. Make all adjustments by using the turnbuckles on the control cables.

6-24. FUEL FIREWALL SHUTOFF VALVES AND CONTROL CABLES.

(See figures 6-15 through 6-17.)

6-25. The fuel emergency shutoff control system incorporates shutoff valves installed just aft of the firewall in the fuel pipes. Each valve is operated by cables routed through the center wing and along the fuselage, which are connected to handles located under the access door to the fire extinguisher system, on the floor between the pilot's and co-pilot's seats. In case of fire in either engine, the respective handle is pulled, which in turn shuts off the fuel system to that engine.

6-26. REMOVAL OF FUEL FIREWALL SHUTOFF VALVE CONTROL CABLES.

a. Break the lockwire on the turnbuckles near the bellcrank in each nacelle.

b. Remove the center floor panel aft of the control pedestal.

c. Disconnect the clevis and pin connections.

d. Remove the guard pins from the pulley cluster in the center wing. This pulley cluster can be reached through the selector valve access doors, located at the forward edge of the center section, to the left and right side of the airplane centerline.

e. Pull the fuel firewall shutoff control cable through the pulley cluster into the nacelle.

CAUTION

Carefully pull the cable through the pulley cluster so there is no danger of chipping the micarta pulleys.

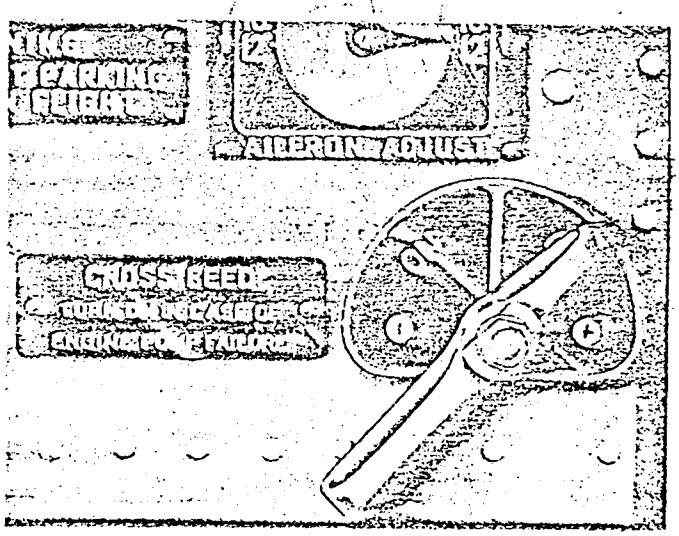

33,085

Figure 6-13. Cross-Feed Valve Control

6-27. MAINTENANCE, REPAIR, AND REPLACEMENT OF FUEL FIREWALL SHUTOFF VALVE CONTROL CABLES.

a. Inspect all pulleys, and replace any that are damaged.

b. Check the cables and replace those that have more than six wires broken in any 1-inch length. Replace any cable with broken wires that travel over a pulley.

6-28. INSTALLATION OF FUEL FIREWALL SHUTOFF VALVE CONTROL CABLES.

a. Insert the fuel firewall shutoff control cable through the pulley cluster in the nacelle.

b. Place the guard pins in the pulley cluster in the center wing.

c. Connect the clevis and pin connections.

d. Replace the center floor panel aft of the control pedestal.

e. Connect the cables at the turnbuckles near the bellcrank in each nacelle, and safety with lockwire.

f. Do not allow the turnbuckle barrel to touch the bellcrank. There should be no springback at the ends of the controls.

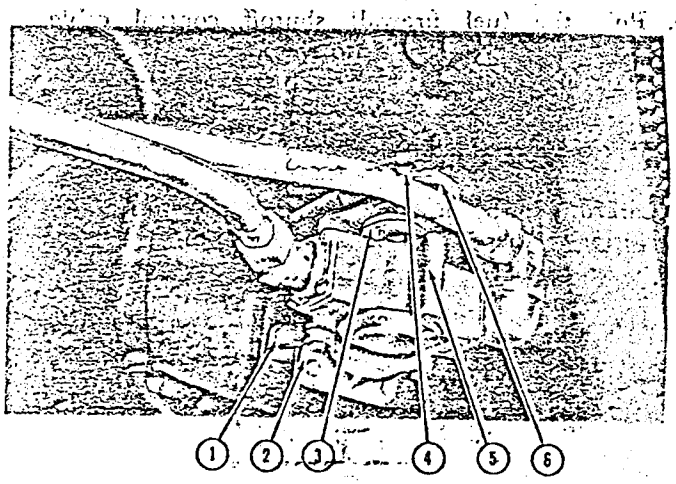

33,086

Figure 6-14. Cross-Feed Valve Installed

Key to Figure 6-14

Item	Nomenclature
1.	Attach Bolt
2.	Lower Support Bracket
3.	Driver Plate and Pins
4.	Cable Stop
5.	Bolt Boss
6.	Control Pulley

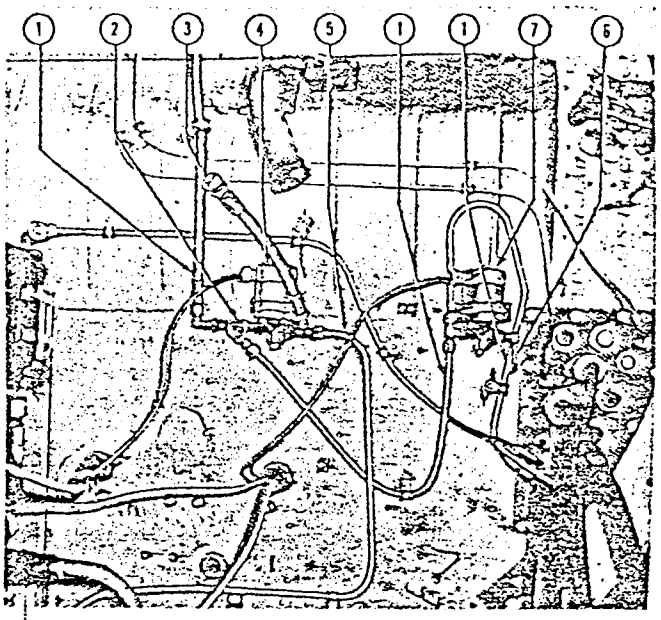

33,087

Figure 6-15. Fuel System Components on Firewall (Some Airplanes)

Key to Figure 6-15

Item	Nomenclature
1.	Fuel Pressure Indicator Line
2.	Restrictor Fitting
3.	Line to Engine Oil System
4.	Oil Dilution Solenoid
5.	Oil Dilution Line to Engine Oil System Wye Drain
6.	Outlet Side of Engine Primer Solenoid
7.	Engine Primer Solenoid

6-29. REMOVAL OF FUEL FIREWALL SHUTOFF VALVE.

Note

Before removing the fuel firewall shutoff valve, close the wing tank fuel selector valves, and drain the strainers.

a. Remove the linkage from the valve.

b. Disconnect and cap the inlet and outlet pipes from the valve.

c. Remove the mounting bolts, washers, and nuts.

d. Remove the valve.

Note

If external leakage of the valve is noticed, replace the O-rings. For location of the valve, see figures 6-16 and 6-17.

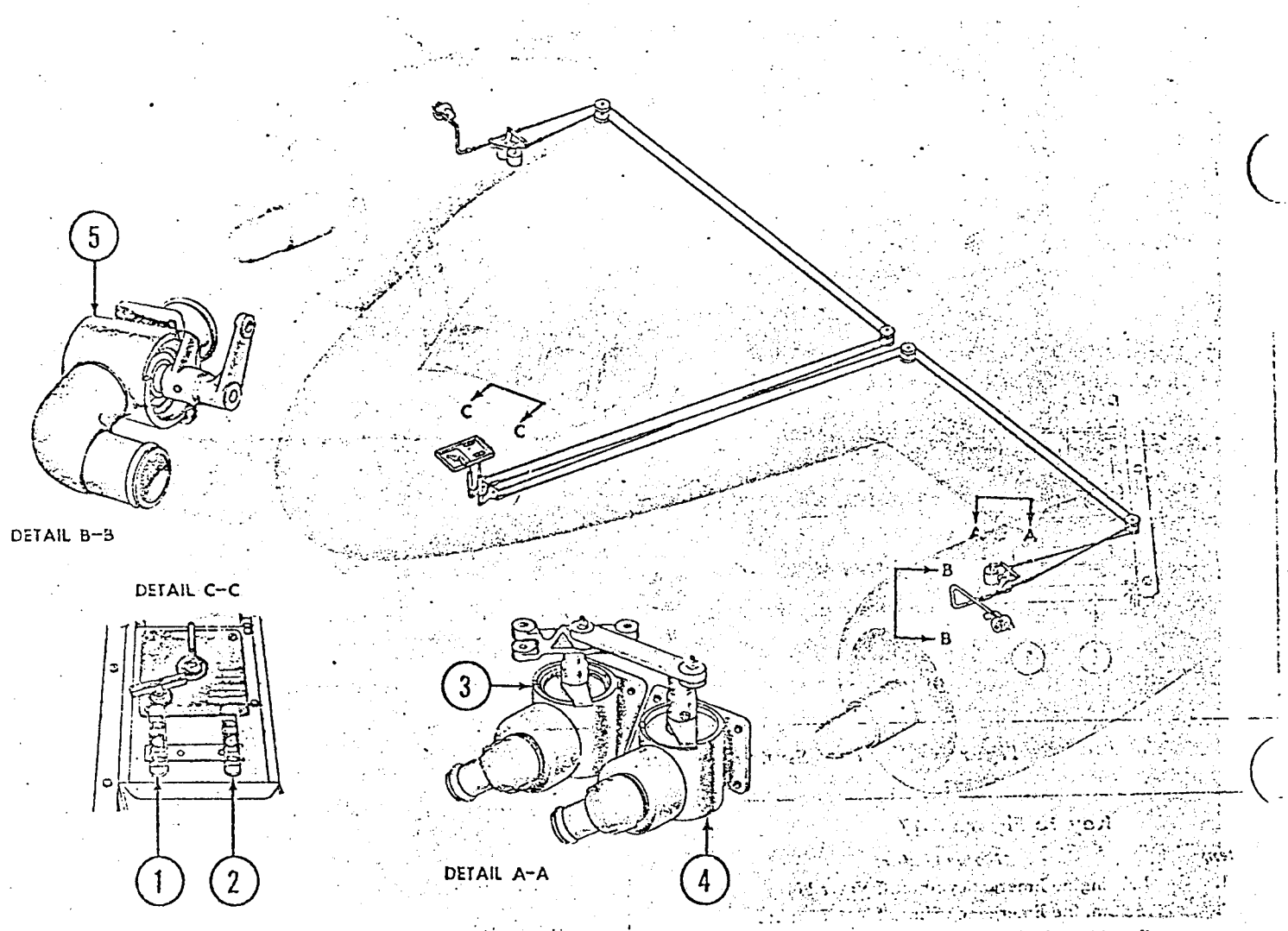

Figure 6-16. Fuel Shutoff Valves (C-117 Airplanes)

33,088

Key to Figure 6-16	
Item	*Nomenclature*
1.	LH Engine Emergency Shutoff Valve Handle
2.	RH Engine Emergency Shutoff Valve Handle
3.	Fuel Shutoff Valve
4.	Hydraulic Shutoff Valve
5.	Oil Shutoff Valve

6-30. MAINTENANCE, REPAIR, AND REPLACEMENT OF FUEL FIREWALL SHUTOFF VALVE.

a. Check the gaskets of the valve; replace them if damaged.

b. If any other parts are faulty, replace the valve.

6-31. INSTALLATION OF FUEL FIREWALL SHUTOFF VALVE.

a. Secure the valve to the bracket with the mounting bolts, washers, and nuts.

b. Connect the inlet and outlet pipes to the valve.

6-32. WOBBLE PUMPS.

6-33. Two wobble pumps are located in the nose section forward of the center wing and are mounted end to end *(see figure 6-18)* to the left of the airplane centerline *(see figure 6-11)*. The arms of both pumps are connected by a link assembly *(see figure 6-18)*. This link assembly is attached to two rods, which in turn connect with a bellcrank on the wobble pump handle *(see figure 6-19)* located near the pilot's seat. When the wobble pump handle is actuated, it exerts a simultaneous push-pull force on the rods connected to the pumps and causes the pumps to operate. The pumps consist principally of a vane and six gate valves, two inlet and four outlet *(see figure 6-20)*. The fuel is drawn in through the inlet gates *(5, figure 6-20)* under pressure and out through the outlet gates *(6, fig-*

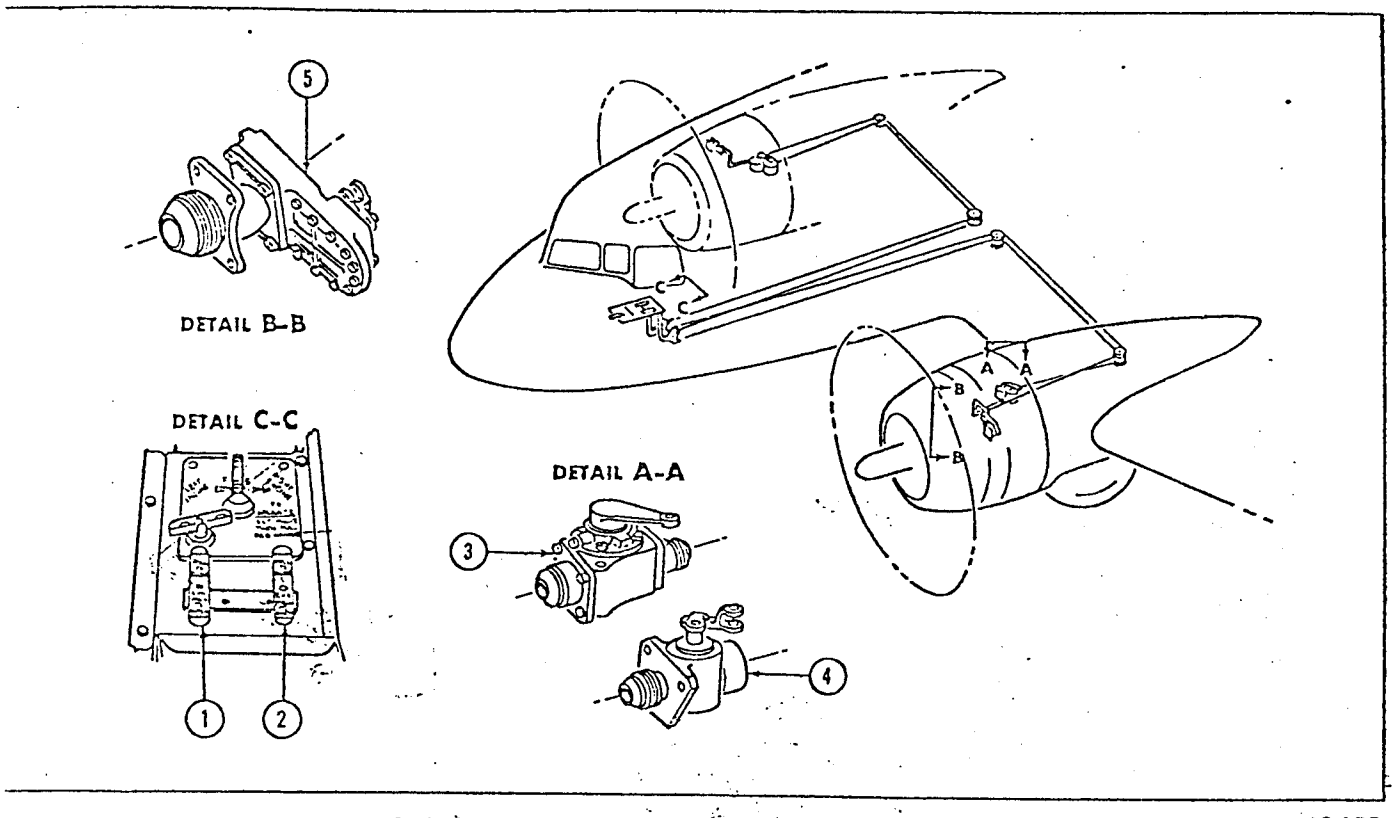

Figure 6-17. Fuel Shutoff Control System (C-47 Airplanes)

19,128

Key to Figure 6-17

Item	*Nomenclature*
1.	LH Engine Emergency Shutoff Valve Handle
2.	RH Engine Emergency Shutoff Valve Handle
3.	Fuel Shutoff Valve
4.	Hydraulic Shutoff Valve
5.	Oil Shutoff Valve

re 6-20). The pump is capable of producing up to 26 si pressure. A bypass valve *(2, figure 6-20)* allows fuel flow around the pump when the engine-driven umps are operating and the wobble pump is not.

34. REMOVAL OF WOBBLE PUMP.

a. Remove the panel marked WOBBLE PUMP. his panel is located on the underside of the airplane the forward junction of the fuselage and the center ing section.

b. Disconnect and remove the link assembly *(1, figre 6-18)* that joins the two arms on the pump.

c. Disconnect and cap the inlet and outlet pipes.

d. Remove the three bolts securing the pump to ie support bracket.

e. Remove the pump.

6-35. MAINTENANCE, REPAIR, AND REPLACEMENT OF WOBBLE PUMPS.

a. Cut the safetywire.

b. Remove the screws from the plate.

c. Clean the pump with solvent to remove any sediment or foreign particles.

d. If the gates are inoperative or the vane is badly worn, replace the pump.

e. If the pump is leaking around the packing nut *(2, figure 6-18),* tighten or repack the nut.

Note

Do not tighten the packing nut too far. Repack the nut or replace the pump. If leakage around the pump is slight, a half-turn of the nut is sufficient. Continued tightening of the nut will damage the threads.

6-36. INSTALLATION OF WOBBLE PUMP.

a. Install the pump to the support bracket with three bolts.

b. Connect the inlet and outlet pipes.

c. Install and connect the link assembly to the arms on the pump.

d. Install the panel.

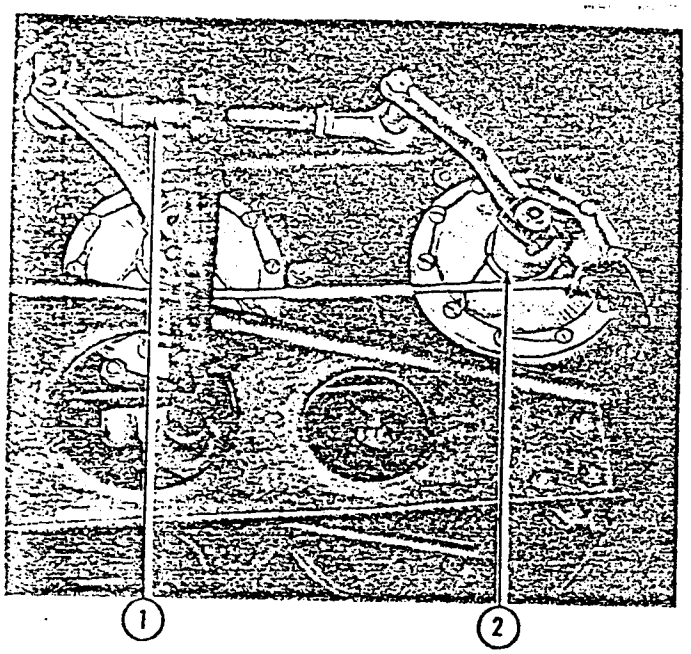

33,089

Figure 6-18. Wobble Pumps (Some C-47 and C-47A Airplanes)

Key to Figure 6-18

Item	*Nomenclature*
1.	Link Assembly
2.	Packing Nut

6-37. TEST AFTER INSTALLATION OF WOBBLE PUMPS.

a. Check the stroke of the pumps by the movement of the handle *(see figure 6-19)*. The bracket on the bottom of the handle should touch the stops in the frame at both the top and bottom of the stroke.

b. If a full stroke is not obtained, adjust the first rod below the handle by loosening the nut between the rod and the bearing rod end and turning the rod. Turning the rod clockwise shortens the stroke and turning it counterclockwise lengthens it.

c. When operating properly, the pump will test at 26 psi. Pressure is adjusted by turning the screw on the bottom of the bypass and relief valve housing *(1, figure 6-20)*. Turning the screw clockwise increases the pressure and turning the screw counterclockwise decreases it.

6-38. ENGINE-DRIVEN FUEL PUMPS.

6-39. An engine-driven fuel pump *(see figure 6-21)* is mounted on the back of each engine, and is operated by a drive shaft coupled to the engine drive gear. The pump is a 4-blade rotary type with an outlet and inlet port and an adjustable pressure relief valve which maintains a constant fuel pressure at various engine speeds. The pump pressure relief valve is a spring-loaded diaphragm which opens when the pump is operated at high speed and allows excess fuel to flow back to the intake chamber. At low operating speeds, the pressure relief valve closes and allows the full flow of fuel to pass through the outlet port. A drainpipe is connected to the diaphragm vent boss for drainage of any small amount of fuel that may leak around the diaphragm. A bypass valve in the fuel pump allows fuel to flow around the engine-driven pump when the wobble pump or the electrical booster pumps are in use.

6-40. REMOVAL OF ENGINE-DRIVEN FUEL PUMP.

a. Disconnect all pipes attached to the pump *(see figure 6-21)*.

b. Cut the safetywire and remove the four bolts in the mounting bracket.

c. Pull the pump straight back to disengage the gear on the pump drive shaft from the engine drive gear.

d. Remove the pump and attach the cover plate.

6-41. MAINTENANCE, REPAIR, AND REPLACEMENT OF ENGINE-DRIVEN FUEL PUMPS. Any engine-driven fuel pump that is not functioning prop-

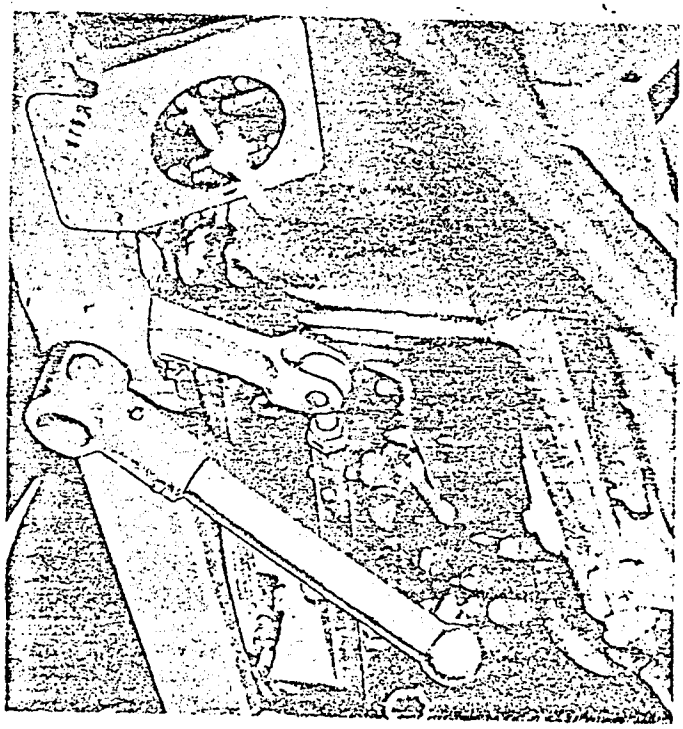

33,090

Figure 6-19. Wobble Pump Control (Some C-47 and Early C-47A Airplanes)

erly must be replaced. Forward the replaced pump to the depot for repair.

6-42. INSTALLATION OF ENGINE-DRIVEN FUEL PUMP.

a. Remove the cover plate and gasket protecting the engine fuel pump drive and wipe the pad clean.

b. Remove the shipping plugs from the pump ports and test for freedom of operation by turning the shaft with the fingers.

c. Before mounting the pump on the engine, note the direction of rotation of the drive gear, and the position of the relief valve housing, to insure that the bypass valve openings are aligned.

d. Place the new gasket in position over the mounting studs and align the pump with the connections.

e. Tighten the nuts evenly. If castle nuts are used, they must be properly safetied *(see figure 6-21)*. Self-locking nuts can be used in place of castle nuts. Torque all 3/16-inch diameter bolts, or fillister-head screws to 20 to 30 inch-pounds; 1/4-inch diameter bolts or screws to 50 to 70 inch-pounds and safety them.

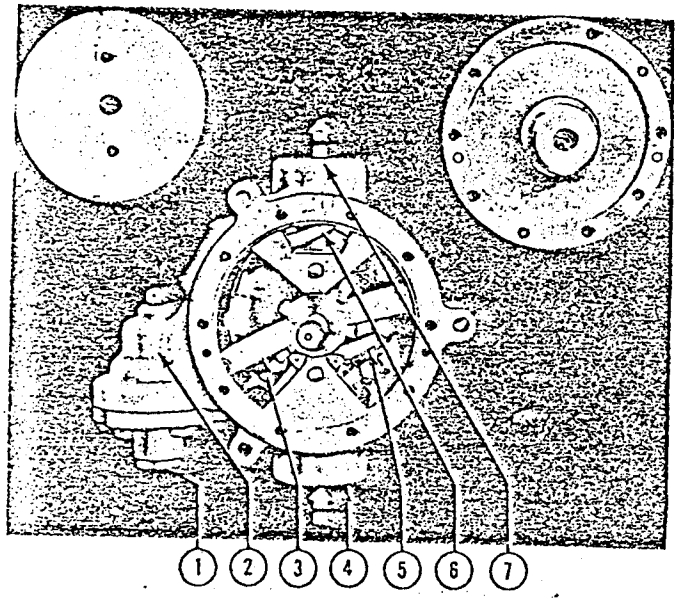

Figure 6-20. Wobble Pumps Disassembled (C-47 and Early C-47A Airplanes) 33,091

Key to Figure 6-20	
Item	*Nomenclature*
1.	Pressure Adjusting Screw
2.	Bypass Valve Housing
3.	Vane
4.	Inlet Port
5.	Inlet Gate Valve
6.	Outlet Gate Valve
7.	Outlet Port

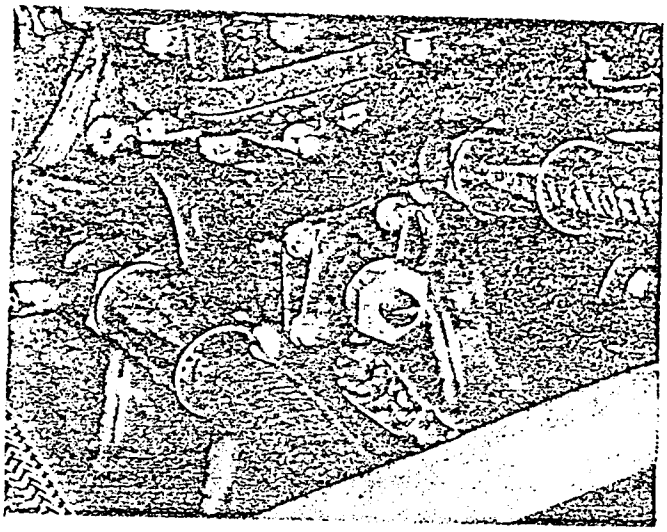

Figure 6-21. Engine-Driven Fuel Pump, Showing Pressure Adjusting Screw 33,092

Note

Torquing will eliminate leakage between the fuel pump body and the relief valve housing, due to shrinkage of the gasket.

f. Connect the intake, discharge, and drainpipes to the proper pump ports. The discharge port for either direction of rotation is designated by arrows on the nameplate fastened to the end of the pump body.

Note

Make certain that the flexible hose to the pump ports is of sufficient length to insure that hose fracture will not result from engine vibration *(see figure 6-21)*.

6-43. TEST AFTER INSTALLATION OF ENGINE-DRIVEN FUEL PUMPS.

With engine turning at 2300 to 2400 rpm (manifold pressure at FIELD BAROMETRIC inches Hg) the fuel pressure gage should read 17 (±1) psi. If the fuel pressure gage shows more or less pressure than 17 (± 1) psi, adjust as outlined in the following steps.

a. Adjust the pressure regulator screw located on the bottom of the relief valve housing on the engine-driven pump *(see figure 6-21)*, by loosening the lock nut and turning the adjusting screw clockwise to increase the pressure and counterclockwise to decrease it.

b. Tighten the lock nut after adjustment.

c. Check the two drainpipes on the pump for any fuel discharge.

d. Replace the pump if there is continued leakage from either drainpipe.

e. Idle the engine and check the fuel pressure gage for any change in fuel pressure. There should be a drop in pressure of approximately 2 psi. If the pressure drops to 14 psi or lower when the engine is turning at idle speed, replace the pump.

Note

At times fluctuation in fuel pressure indication is caused by air in the pipes. Operate the wobble or booster pump and then again check the fuel pressure gage reading. This will clear the fuel pipes and the pressure gage will indicate properly.

6-44. ELECTRIC BOOSTER PUMPS.

6-45. On late C-47A and all C-47B and C-117 series airplanes, two electrically driven booster pumps are installed in place of wobble pumps. These are located at the junction of the nose section and the center wing, to the left of the airplane centerline. Each assembly consists of an electric motor and a rotary vane-type fuel pump. If removal of the pump is necessary, the panel marked BOOSTER PUMP must be removed.

6-46. These pumps are identical to the engine-driven pump. Each pump is controlled by a switch located in the electrical panel on the right side of the flight compartment. Each circuit is protected by a circuit breaker located on the circuit breaker panel of the main junction box. No fuses are used in this circuit.

6-47. These pumps are installed so that the intake pipes are connected to the lower elbows. The pipes run directly from the fuel strainers. The upper elbows are connected to the pipes that run into each nacelle. On each booster pump, a vent pipe is installed at the junction of the motor drive and the splined shaft of the fuel pump. This pipe runs through the skin and vents overboard to take care of any leakage of fuel that might seep into the motor housing.

6-48. The motor is 24-volt d-c explosive-proof 1/8-hp sealed gear type which operates at approximately 2000 rpm.

6-49. REMOVAL OF FUEL BOOSTER PUMP.

a. Open the circuit breaker in the main junction box.

b. Turn the fuel selector valves OFF.

c. Remove the access panel from the bottom of the airplane at the forward junction of the fuselage and center wing.

d. Disconnect and cap the fuel system piping, and remove the vent piping.

e. Disconnect the electrical connector.

f. Remove the four self-locking nuts, washers, and bolts (if required) securing both pump motors to the mounting bracket.

g. Remove the pump assembly.

h. Remove the four bolts securing the motor to the pump, and remove the motor.

6-50. MAINTENANCE, REPAIR, AND REPLACEMENT OF ELECTRIC BOOSTER PUMPS. Any fuel pump that is not functioning properly must be replaced. Forward the replaced pump to the depot for repair.

6-51. INSTALLATION OF ELECTRIC BOOSTER PUMP.

a. Remove the gasket from the motor casting and clean the pad.

b. Remove the shipping plugs from the pump ports, and the wood cover that protects the pad and the drive shaft of the pump. Test the pump by turning the shaft with the fingers.

c. Before installing, check the location of the intake and outlet ports. Place the gasket in position over the mounting studs and mount the pump in position so that the intake port is located on the bottom. Tighten the nuts and safety them with lockwire *(4, figure 6-22)*. Torque all 3/16-inch diameter bolts or fillister-head screws to 20 to 30 inch-pounds; 1/4-inch diameter bolts or screws to 50 to 70 inch-pounds and safety them.

Note

Torquing to the values outlined in step c will eliminate leakage between the fuel pump body and the relief valve housing due to shrinkage of the gasket.

d. Connect the intake pipe from the fuel strainer to the elbow at the bottom port. Connect the elbow on the discharge port to the pipe leading to the nacelle. Connect the vent pipe.

6-52. TEST AFTER INSTALLATION OF ELECTRIC BOOSTER PUMPS.

a. Open both fuel selector valves.

b. Test the booster pump by operating it for at least 5 minutes. At the end of this time, the fuel pressure gage should read 17 psi. There should be no leakage.

Note

Check the vent opening *(2, figure 6-22)* for the presence of fuel. Leakage at this point warrants replacement of the pump.

c. If the pressure gage shows more or less than 17 psi, adjust the regulator screw on the pressure relief valve housing by loosening the lock nut and turning the adjusting screw clockwise to increase the pressure, and counterclockwise to decrease it. On some pumps it will be necessary to remove a lock-nut cover *(6, figure 6-22)*. After adjustments have been completed, tighten the lock nut.

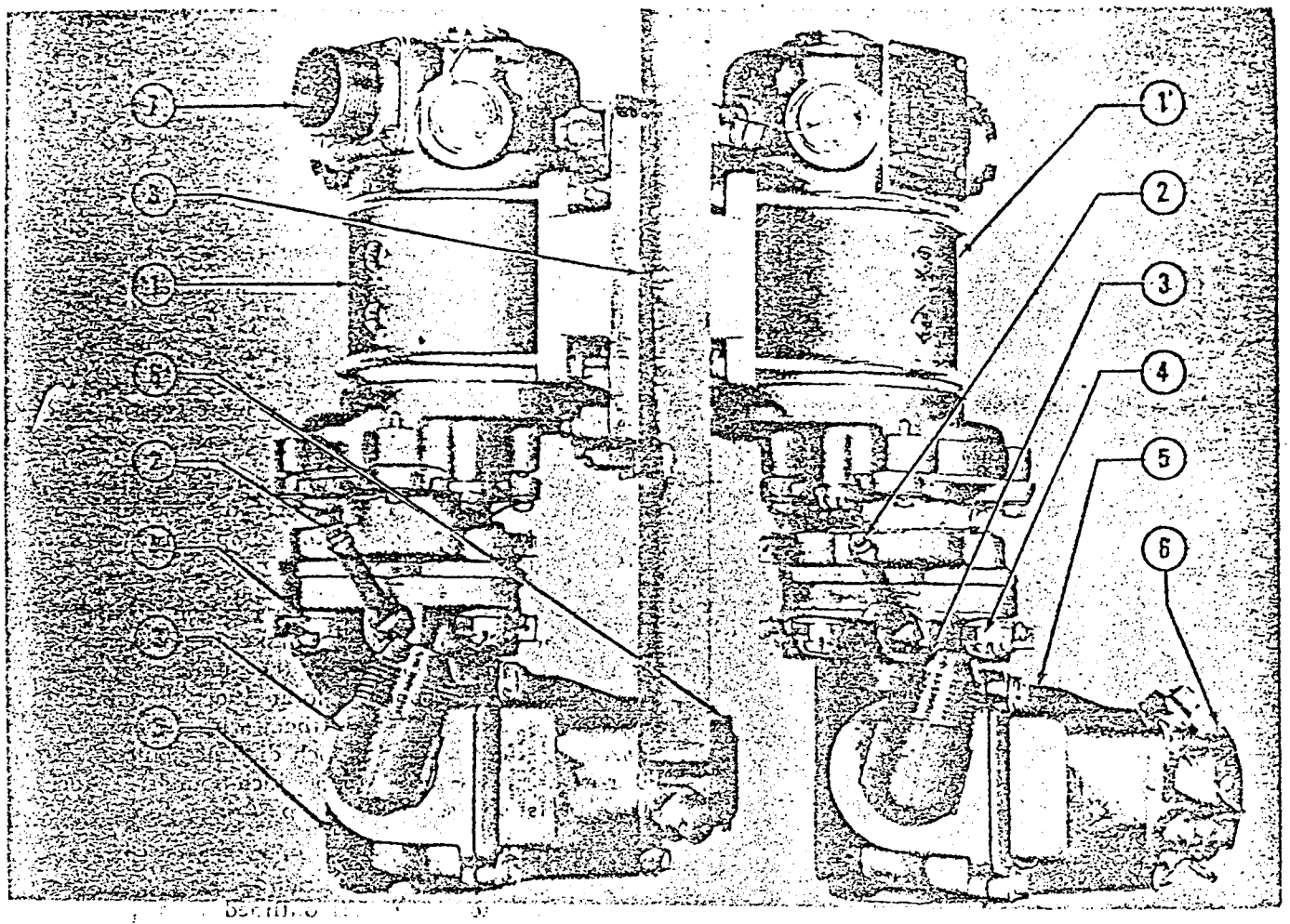

33,093

Figure 6-22. Electric Booster Pumps

Key to Figure 6-22

Item	*Nomenclature*	*Item*	*Nomenclature*
1.	Electric Motor	5.	AN 4101 Fuel Pump
2.	Vent Connection	6.	Lock Nut Cover
3.	Inlet Port	7.	Electrical Connection
4.	Large Castle Nut (4 on each side)	8.	Bracket

Note

Check the vent pipe and the pressure relief valve housing for any fuel discharge or leakages. Continued leakage is cause for rejecting the pump.

6-53. FUEL BOOSTER PUMP MOTORS.

6-54. On some airplanes, a motor is mounted on each of the two booster pumps installed in the center wing section. The motor is a 24-volt d-c, ⅛-hp series wound reversible motor. On C-47 series airplanes, the fuel booster pump switches are installed on the center electrical panel. On C-117 series airplanes, the fuel booster pump switches are installed on the right electrical panel. The switches are wired through 20-ampere circuit breakers located in the main junction box.

6-55. MAINTENANCE, REPAIR, AND REPLACEMENT OF FUEL BOOSTER PUMP MOTORS. Replace the brushes when they are worn to 1/16 inch of the brush holder, or replace the entire motor.

6-56. FUEL STRAINERS.

6-57. On all C-47 and early C-47A airplanes, the fuel strainers for each engine are mounted on the inboard side of the nacelle (*2, figure 6-12*). The words FUEL STRAINER are stamped on the outside of each nacelle showing the location of the strainer which is accessible from inside the nacelle. The strainer consists of

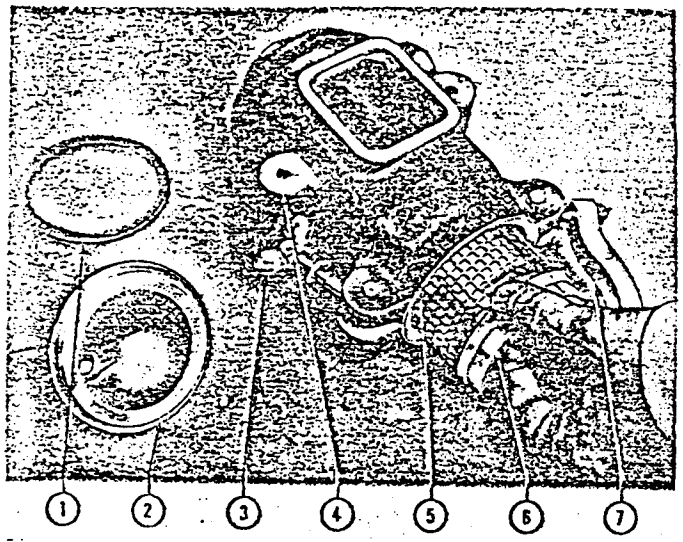

Figure 6-23. Fuel Strainer—Disassembled

Key to Figure 6-23

Item	*Nomenclature*
1.	Gasket
2.	Removable Bottom
3.	Retainer Bar Wing Nut
4.	Boss for Mounting Bolt
5.	Barrel
6.	Screen
7.	Retainer Bar

an inlet and outlet fitting, a barrel, a screen strainer unit, and a removable bottom plate secured by a retainer bar, a wingnut, and a drain cock *(see figure 6-23.)* Fuel flows through the inlet side of the strainer and passes through the screen on the outlet side. On late C-47A, C-47B, and C-117 series airplanes, the fuel strainers are located in the center wing near the fuel selector valves. The drain to the strainer protrudes through an access door marked TANK SELECTOR VALVE COVER.

6-58. REMOVAL OF FUEL STRAINER.

a. Turn the fuel selector valves off.

b. Turn all ferry fuel system valves off if installed.

c. Disconnect the pipes from the strainer.

d. Remove the two bolts and remove the strainer from the support.

6-59. DISASSEMBLY OF FUEL STRAINER (AIRPLANES WITH FUEL STRAINER IN NACELLE).
(See figure 6-23.)

a. Cut and remove the safetywire from the drain cock, and drain the fuel from the strainer.

b. Loosen the wingnut and remove the retainer bar.

c. Remove the cover and the wire screen strainer.

6-60. ASSEMBLY OF FUEL STRAINER (AIRPLANES WITH FUEL STRAINER IN NACELLE).
(See figure 6-23.)

a. Install the wire screen strainer and cover.

b. Install the retainer bar and tighten the wingnut.

6-61. DISASSEMBLY OF FUEL STRAINER (AIRPLANES WITH FUEL STRAINER IN CENTER WING).
(See figure 6-24.)

a. Open the drain cock, drain the fuel from the strainer and remove the drain cock.

b. Remove the plug for air.

c. Remove the extension (and reducer bushing if installed).

d. Loosen the thumbscrew and remove the cover.

CAUTION

Be sure that the fuel drains outside of the airplane fuselage. Do not allow fuel to run inside of the center wing section.

e. Remove the cover and screen as one unit.

f. Remove the screen from the cover.

6-62. ASSEMBLY OF FUEL STRAINER (AIRPLANES WITH FUEL STRAINER IN CENTER WING).
(See figure 6-24.)

a. Install the cover and screen as one unit.

b. Tighten the thumbscrew of the cover.

c. Install the extension (and reducer bushing if installed).

d. Install the drain cock.

6-63. MAINTENANCE, REPAIR, AND REPLACEMENT OF FUEL STRAINERS.

a. Thoroughly clean the screen and the strainer barrel.

b. Remove and replace the gasket.

c. Clean the drain cock.

d. Check the inlet and outlet fittings for leakage; tighten them if necessary.

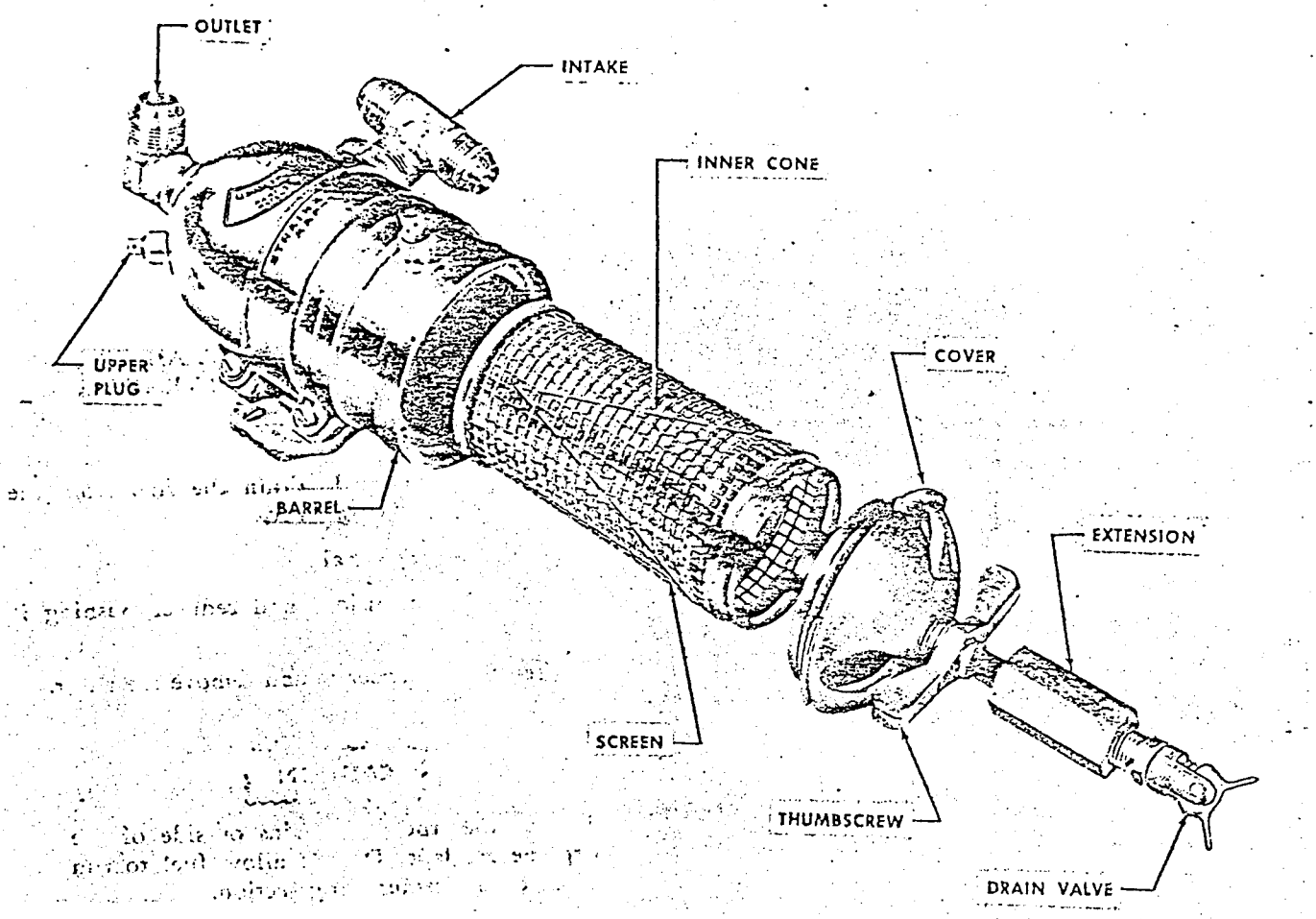

Figure 6-24. Fuel Strainer

33,095

6-64. INSTALLATION OF FUEL STRAINER.

a. Install the strainer to the support with two bolts.

CAUTION

If double action type drain cocks are used, install so that when in the open position the action moves parallel to the wing spar.

b. Install the plug, and connect all pipes.

c. Safetywire the drain valve and the thumbscrews.

CAUTION

On both types of fuel strainers, insert the screen into the barrel with the pointed end of the cone positioned upward.

6-65. TEST AFTER INSTALLATION OF FUEL STRAINERS. After the installation has been completed, turn on the selector valves and operate the wobble or the booster pumps to remove air from the system. Check the strainers for any leakage of fuel. On airplanes with fuel strainers located in the nacelle, the pressure accumulated by the wobble pumps is forced into the fuel strainers and fittings. Check these thoroughly for leakage of fuel after operating the pumps.

6-66. FUEL PRESSURE INDICATING SYSTEM.

6-67. FUEL PRESSURE GAGE PIPE.
(See figures 6-15 and 6-25.)

6-68. The fuel pressure gage pipe, connected to a restrictor tee fitting on the oil dilution solenoid, operates the fuel pressure gage located on the pilot's instrument panel.

6-69. OIL DILUTION SOLENOID.

6-70. The oil dilution solenoid *(4, figure 6-15)*, connected to the restrictor fitting in the fuel pressure gage pipe, is provided to dilute both the engine oil and the propeller feathering oil with fuel. The solenoid is controlled by a toggle-type switch located on the pilot's electrical panel. When the switch is in the ON position and the oil dilution solenoid is energized, fuel passes through the solenoid and a pipe connected to the engine oil system *(3, figure 6-15)*, and through a second pipe *(5, figure 6-15)* connected to the engine oil wye drain valve, which in turn is connected to the propeller feathering pump.

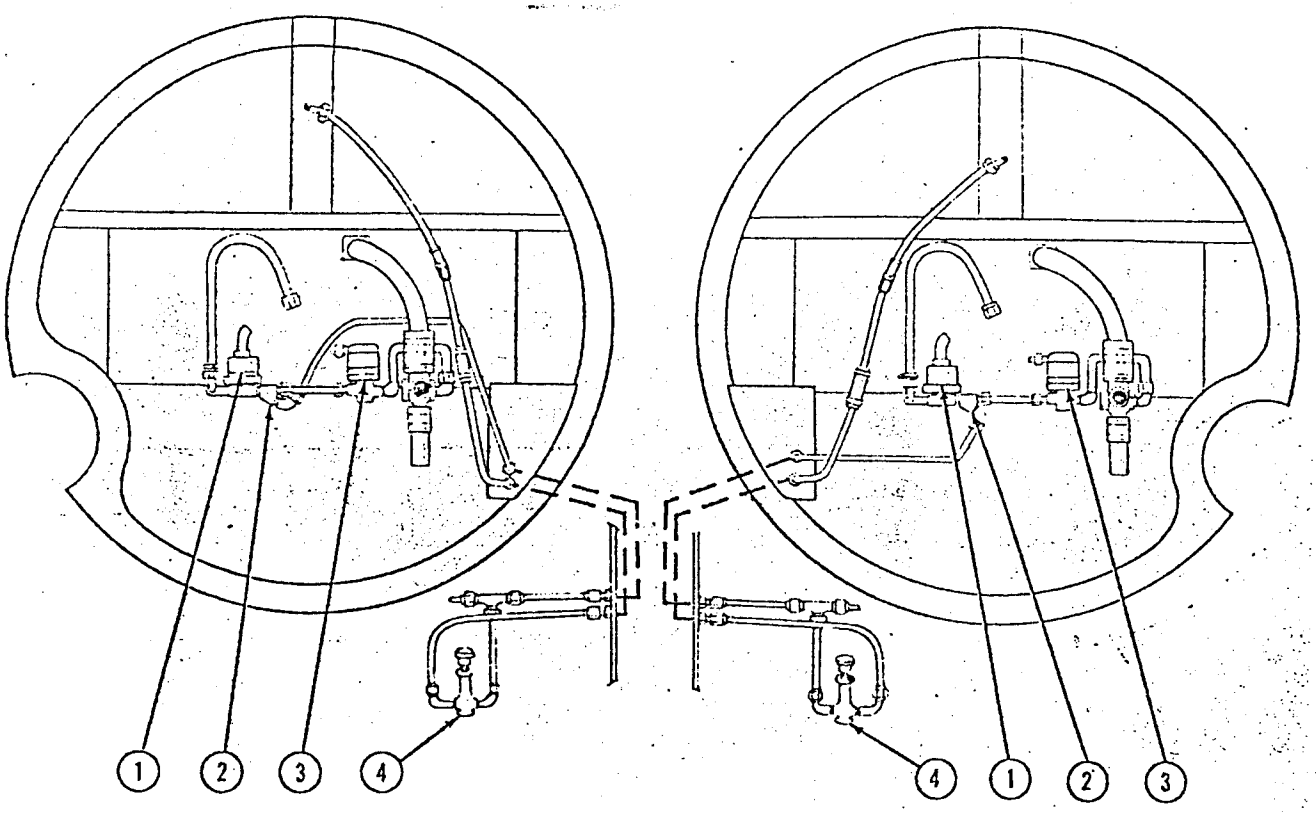

Figure 6-25. Fuel System - Firewall (Some Airplanes) (Sheet 1 of 2)

33,096

Key to Figure 6-25 (Sheet 1 of 2)

Item	Nomenclature	Item	Nomenclature
1.	Pressure Warning Switch	3.	Oil Dilution Solenoid
2.	Restrictor Fitting	4.	Hand Primer

6-71. ENGINE PRIMER SOLENOID.

6-72. The engine primer solenoid *(6, figure 6-15)* connects into the fuel pressure gage pipe through a tee fitting. The solenoid is identical to the oil dilution solenoid, and is operated by a toggle-type switch mounted next to the oil dilution switch on the pilot's electrical panel. When the engine primer solenoid is energized, fuel flows from the fuel pressure pipe *(1, figure 6-15)* through the solenoid and to the engine through a spider fitting and individual pipes. The fuel is injected into the top eight cylinders to prime the engine for starting. On some airplanes, the primer solenoid is mounted in the nacelles *(1, figure 6-12)*.

6-73. REMOVAL OF OIL DILUTION AND ENGINE PRIMER SOLENOID.

a. Disconnect the electrical wiring.

b. Disconnect the fuel pressure gage pipe.

c. Remove the nut from the U-bolt that secures the solenoid to the support bracket.

6-74. MAINTENANCE, REPAIR, AND REPLACEMENT OF SOLENOIDS. No repair of either the oil dilution or engine primer solenoid units will be made. Replace any faulty units. Remove the drain plug from the bottom of the solenoid unit in order to remove any residue or foreign substances.

6-75. INSTALLATION OF OIL DILUTION AND ENGINE PRIMER SOLENOID.

a. Install the nut on the U-bolt.

b. Secure the solenoid to the bracket.

c. Connect the fuel pipes.

d. Connect the electrical wiring to the solenoid.

6-76. TEST AFTER INSTALLATION OF SOLENOIDS.

a. Disconnect the pipe from the outlet side of the solenoid *(6, figure 6-15)*.

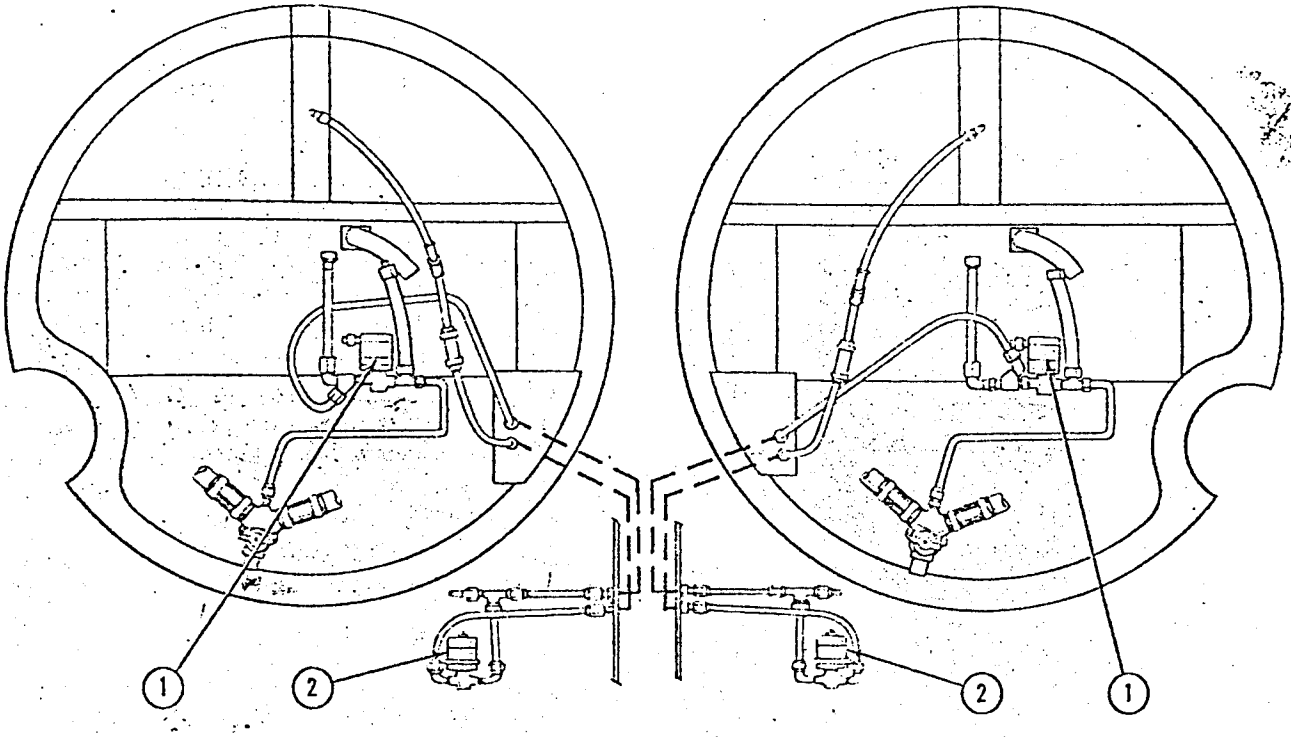

Figure 6-25. Fuel System - Firewall (Some Airplanes) (Sheet 2 of 2)

33,097

Key to Figure 6-25 (Sheet 2 of 2)

Item	*Nomenclature*	*Item*	*Nomenclature*
1.	Oil Dilution Solenoid	2.	Engine Primer Solenoid

b. Turn on the booster pump and check for leaks. Leakage is not to exceed 10 drops per minute.

6-77. DEFUELING AND REFUELING.

6-78. FILLING FUEL TANKS. Under all conditions, the auxiliary fuel tanks must be completely filled first. After the auxiliary tanks have been filled, the main tanks will either be partially or completely filled as required by the next flight of the airplane.

WARNING

Make certain that the airplane is statically grounded before servicing any fuel tanks. If fuel is spilled during the refueling operation, move the airplane to a safe distance from the spillage area before starting the engines.

For additional information on servicing the airplane, refer to Section II.

6-79. DRAINING FUEL TANKS. Remove fuel from the main and auxiliary tanks by draining the fuel at the four drain cocks, or by pumping through the filler neck of each tank. Remove the fuel from the main tanks first.

6-80. FUEL QUANTITY INDICATING SYSTEM.

6-81. GENERAL DESCRIPTION. The fuel quantity indicating system electrically measures the quantity of fuel in each tank. The floats are attached to a resistor strip within the liquidometer unit, which is electrically connected to the indicator located on the main instrument panel. Movement of the tank float causes a variation in the electrical current which is shown on the indicator. See Section VIII.

6-82. LONG RANGE (FERRY) FUEL SYSTEM.

6-83. GENERAL DESCRIPTION. Provisions for carrying fuel for long range operations are made by

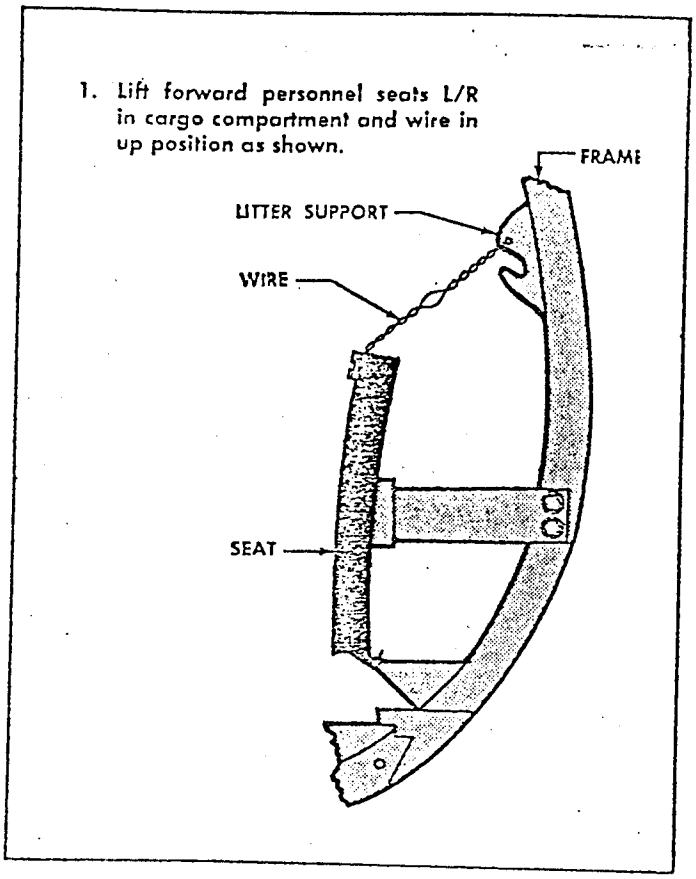

33,098

Figure 6-26. Personnel Seat — Wired in Up Position

installing ferry fuel tanks in the cargo compartment of the airplane.

WARNING

Do not use the ferry system at the same time the main fuel system is in use. When the ferry tanks are in use, make certain that the main fuel supply selector valves are in the OFF position. If both systems are turned on at the same time, the fuel will flow down from the ferry tanks through the main selector valve and into the main tanks. If the main tanks are already full, the fuel will flow out through the wing tank vent pipes and create a dangerous fire hazard, and a greatly shortened flying range.

6-84. INSTALLATION OF LONG RANGE (FERRY) FUEL SYSTEM.

a. Raise the forward left and right personnel seats in the cargo compartment, and wire them in the position shown in figure 6-26.

b. Remove the rubber mat from the center walkway between stations 177.50 and 250.50 to uncover the floor tie-down fittings.

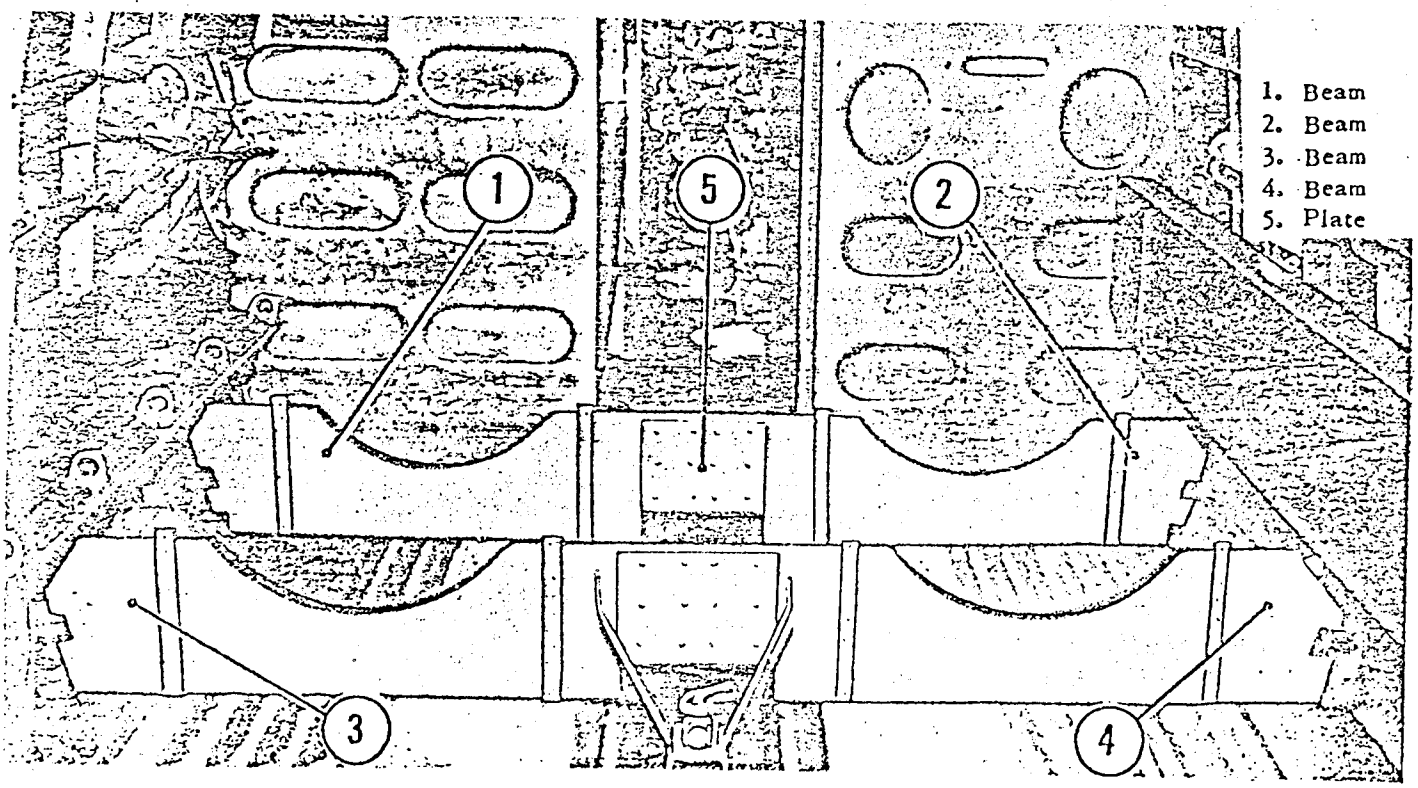

33,099

Figure 6-27. Beam Installation

TABLE 7-18 (Continued)

TROUBLE	PROBABLE CAUSE	REMEDY
a. (Continued)	Bent shaft.	Remove and replace shaft.
b. Pointer not operative.	Pin missing or sheared.	Install new pin.

7-183. REMOVAL OF ELEVATOR TRIM TAB INDICATOR.

a. Remove the nut and washers from the wheel shaft.

b. Remove the wheel and key from the shaft.

c. Remove the cover assembly.

7-184. INSTALLATION OF ELEVATOR TRIM TAB INDICATOR.

a. Install the cover assembly.

b. Position the key and install the wheel on the shaft.

c. Install the wheel nut.

Note

Add washers if necessary to keep the shaft thread flush with the end of the wheel nut.

7-185. OPERATIONAL TEST AND ADJUSTMENT OF ELEVATOR TRIM TAB INDICATOR.

a. Turn the elevator trim tab wheel until the pointer travels through the full range of the placard; no binding should occur.

b. Visually place the elevator trim tabs in the neutral position; the indicator pointer must be on ZERO.

7-186. WING FLAP INDICATOR.

7-187. The wing flap indicator is located on the bottom of the main instrument panel, directly forward of the pilot's seat and is mounted horizontally. On some airplanes, the indicator is attached to the cockpit longerons just to the left of the main instrument panel, and is mounted vertically. The placarded positions indicated are UP-¼-½-¾-DOWN.

7-188. OPERATIONAL TEST AND CHECKOUT OF WING FLAP INDICATOR. The operational test and checkout of the wing flap indicator is accomplished as outlined in the following steps.

a. Apply ground power.

b. Move the wing flap control lever through the placarded positions.

c. Note that the indicator reads the corresponding position of the wing flaps.

7-189. TROUBLE SHOOTING OF WING FLAP INDICATOR. Trouble shooting of the wing flap indicator is accomplished as outlined in table 7-19.

7-190. REMOVAL OF WING FLAP INDICATOR.

a. Remove the screws and lift the placarded plate.

b. Remove the two bolts and clamps at each end of the guide.

c. Disconnect the clevis from the actuating cylinder.

d. Disconnect the housing clamps from the fuselage, and remove the indicator assembly.

7-191. INSTALLATION OF WING FLAP INDICATOR.

a. Position the indicator assembly, and install the housing clamps.

b. Attach the clevis to the actuating cylinder.

c. Install the clamp and two bolts at each end of the guide.

TABLE 7-19

TROUBLE SHOOTING - WING FLAP INDICATOR

TROUBLE	PROBABLE CAUSE	REMEDY
a. Indicator fails to respond.	Flaps are not operating.	Check wing flaps. Refer to Section XI.
	Wire broken.	Remove and replace the indicator assembly.
b. Indicator binds.	Kink in housing.	Remove and replace the housing.
	Improper lubrication.	Lubricate. Refer to Section II.

d. Set the placarded plate in position, and install the mounting screws.

7-192. FUNCTIONAL TEST AND ADJUSTMENT OF WING FLAP INDICATOR. The functional test and adjustment of the wing flap indicator is outlined in the following steps.

a. Apply ground power.

b. Extend the flaps to the full down position.

c. Disconnect the clevis from the actuating cylinder.

d. Loosen the locking screw on the clamp.

e. Adjust the rod to obtain ½ inch (±¼ inch) from the end of the tube.

f. Tighten the locking screw.

g. Adjust the clevis and attach to the end of the actuating cylinder.

h. Operate the wing flaps through the full range of the placard; note that the indicator reads the corresponding position of the flaps.

7-193. FUEL QUANTITY INDICATOR.

7-194. A liquidometer fuel quantity indicator on the main instrument panel indicates the fuel quantity in the two main and the two auxiliary tanks. A selector handle on the indicator turns to LEFT AUX, LEFT MAIN, RIGHT MAIN, and RIGHT AUX positions. As the selector is moved from one position to another, the calibrated dial for the new position flips up into the window of the indicator, and the quantity of fuel in the corresponding tank may be read. See section VIII.

7-195. TEMPERATURE INDICATING SYSTEMS.

7-196. GENERAL DESCRIPTION. The temperature indicating systems supply the pilot with necessary temperature data. The temperature indicating systems consist of the free air temperature indicating system, the engine oil temperature indicating system, the carburetor air temperature indicating system, and the engine cylinder temperature indicating system.

7-197. FREE AIR TEMPERATURE INDICATING SYSTEM.

7-198. GENERAL DESCRIPTION. The free air temperature indicating system furnishes a true indication of outside temperature. The free air temperature indicator is installed on the right side of the main instrument panel. A thermometer resistance bulb protrudes from the underside of the airplane. The indicator is connected to the resistance bulb so that changes in the temperature of the outside air will be registered on the indicator face by means of changes in the electrical current between the bulb and the indicator.

7-199 OPERATIONAL TEST AND CHECKOUT OF FREE AIR TEMPERATURE INDICATING SYSTEM.

a. Close the FREE AIR TEMPERATURE INDICATOR circuit breaker.

b. Apply ground power to the airplane.

c. Visually check the indicator and note that it reads the ambient free air temperature and also that the readings do not differ by more than 2½ degrees.

7-200. TROUBLE SHOOTING OF FREE AIR TEMPERATURE INDICATING SYSTEM. Trouble shooting of the free air temperature indicating system is accomplished as outlined in table 7-20).

7-201. REMOVAL AND INSTALLATION OF COMPONENTS OF FREE AIR TEMPERATURE INDICATING SYSTEM.

7-202. REMOVAL OF FREE AIR TEMPERATURE INDICATOR.

a. Disconnect the electrical connector.

b. Support the indicator, and remove the four mounting screws.

7-203. INSTALLATION OF FREE AIR TEMPERATURE INDICATOR.

a. Position the indicator on the panel and secure it with the four mounting screws.

b. Connect the electrical connector.

7-204. REMOVAL OF FREE AIR TEMPERATURE BULB.

a. Disconnect the electrical connector.

b. Remove the safetywire and unscrew the bulb from the fitting mounted in the fuselage plating.

7-205. INSTALLATION OF FREE AIR TEMPERATURE BULB.

a. Screw the bulb into the fitting in the fuselage plating, and secure it with safetywire.

b. Connect the electrical connector.

7-206. FUNCTIONAL TEST OF FREE AIR TEMPERATURE INDICATING SYSTEM.

a. Close the FREE AIR TEMPERATURE INDICATOR circuit breaker.

b. Apply the ground power to the airplane.

c. Place a standard centigrade thermometer as close as possible to the exterior portion of the temperature bulb.

d. Allow 10 minutes for temperature stabilization.

e. Make a visual check of the indicator and the standard thermometer. They must not vary more than 2½ degrees.

TABLE 7-20
TROUBLE SHOOTING - FREE AIR TEMPERATURE INDICATING SYSTEM

TROUBLE	PROBABLE CAUSE	REMEDY
a. No indicator reading.	No electrical power.	Check power source.
	Defective bulb.	Replace bulb.
	Defective indicator.	Replace indicator.
b. Indicator reading off scale at low temperature end.	Short in wire to resistance bulb.	Repair or replace wire.
	Ground in wire from resistance bulb to indicator.	Repair or replace.
	Short circuit in resistance bulb.	Replace bulb.
	Defective indicator.	Replace indicator.
c. Indicator reading off at high temperature.	Break in wire to resistance bulb.	Replace wire.
	Open circuit in bulb.	Replace bulb.
	Defective indicator.	Replace indicator.
d. Low or high reading, either continuously or intermittently.	Loose connections.	Clean and tighten connections.

7-207. ENGINE OIL TEMPERATURE INDICATING SYSTEM.

7-208. **GENERAL DESCRIPTION.** Two oil temperature indicators are mounted on the main instrument panel. On some airplanes, one dual indicator is used. A temperature bulb, located on the right side of each engine accessory case, controls indications of the temperature indicator.

7-209. **TROUBLE SHOOTING OF ENGINE OIL TEMPERATURE INDICATING SYSTEM.** Trouble shooting of the engine oil temperature indicating system is accomplished in the same manner as that of the free air temperature indicating system (see paragraph 7-199.)

7-210. REMOVAL OF ENGINE OIL TEMPERATURE INDICATOR.

a. Disconnect the electrical connector.

b. Support the indicator, remove the four mounting screws, and remove the indicator.

7-211. INSTALLATION OF ENGINE OIL TEMPERATURE INDICATOR.

a. Position the indicator, and secure it with the four mounting screws.

b. Connect the electrical connector.

7-212. REMOVAL OF ENGINE OIL TEMPERATURE BULB.

a. Disconnect the electrical connector.

b. Cut the lockwire, and unscrew the bulb from the fitting on the engine accessory case.

7-213. INSTALLATION OF ENGINE OIL TEMPERATURE BULB.

a. Install the bulb in the fitting on the engine accessory case, and lockwire with steel wire.

b. Connect the electrical connector.

7-214. CARBURETOR AIR TEMPERATURE INDICATING SYSTEM.

7-215. **GENERAL DESCRIPTION.** One dual carburetor air temperature indicator is installed on the right side of the instrument panel. Two thermometer resistance bulbs are installed, one in each engine carburetor airscoop. The indicator is connected to the resistance bulbs so that changes in the temperature of the carburetor air will be registered on the indicator face by means of changes in the electrical current in the circuit between the bulb and the indicator.

7-216. **TROUBLE SHOOTING OF CARBURETOR AIR TEMPERATURE INDICATING SYSTEM.** Trouble shooting of the carburetor air temperature indicating system is accomplished in the same manner as that of the free air temperature indicating system (see table 7-20.)

7-217. REMOVAL OF CARBURETOR AIR TEMPERATURE INDICATOR.

a. Disconnect the electrical connector.

b. Support the indicator, remove the four mounting screws, and remove the indicator.

7-218. INSTALLATION OF CARBURETOR AIR TEMPERATURE INDICATOR.

a. Install the indicator with the four mounting screws.

b. Connect the electrical connector.

7-219. REMOVAL OF CARBURETOR AIR TEMPERATURE BULB.

a. Disconnect the electrical connector.

b. Cut the lockwire, and unscrew the bulb from the airscoop adapter fitting.

7-220. INSTALLATION OF CARBURETOR AIR TEMPERATURE BULB.

a. Install the bulb in the fitting of the airscoop adapter, and safety with steel wire.

b. Connect the electrical connector.

7-221. ENGINE CYLINDER TEMPERATURE INDICATING SYSTEM.

7-222. ENGINE THERMOCOUPLE CIRCUIT. A Type B-11 engine cylinder head temperature dual indicator is installed on the right side of the instrument panel. A thermocouple gasket is installed under the aft spark plug at cylinder No. 1 on the right engine and another at cylinder No. 13 on the left engine. The thermocouple is a copper gasket attached to one iron lead and one constantan lead. The indicator is connected to each thermocouple by leads of calibrated length. The thermocouple assembly transforms the cylinder heat to a proportional electrical current by the different thermoelectric properties of the two metals. This circuit is self-contained and independent of all power supply circuits. Refer to Section XII for the circuit wiring diagram.

CAUTION

Do not change the length of thermocouple leads or replace the iron-constantan-type leads with another bimetallic type unless the system is modified.

7-223. REMOVAL AND INSTALLATION OF ENGINE TEMPERATURE INDICATOR. Removal and installation procedures for the engine temperature indicator are outlined in the following paragraphs.

7-224. REMOVAL OF ENGINE TEMPERATURE INDICATOR.

a. Remove the screws attaching the indicator to the instrument panel.

b. Move the indicator free of the instrument panel and disconnect the electrical wiring.

c. Remove the indicator.

7-225. ADJUSTMENT OF ENGINE TEMPERATURE INDICATOR.

a. Disconnect the leads from the indicator.

b. Compare the indicated temperature with a calibrated test thermometer.

c. If necessary, adjust the indicator to agree with the check thermometer by turning the adjusting screw on the indicator face.

7-226. An alternate method of checking the engine temperature indicator is outlined in the following:

a. With the engine cold, place a test thermometer near the thermocouple.

b. Adjust the indicator, if necessary, to agree with the check thermometer by turning the adjusting screw on the indicator.

7-227. INSTALLATION OF ENGINE TEMPERATURE INDICATOR.

a. Connect the leads to the indicator.

b. Position the indicator in the instrument panel.

c. Secure the indicator to the instrument panel with the attaching screws.

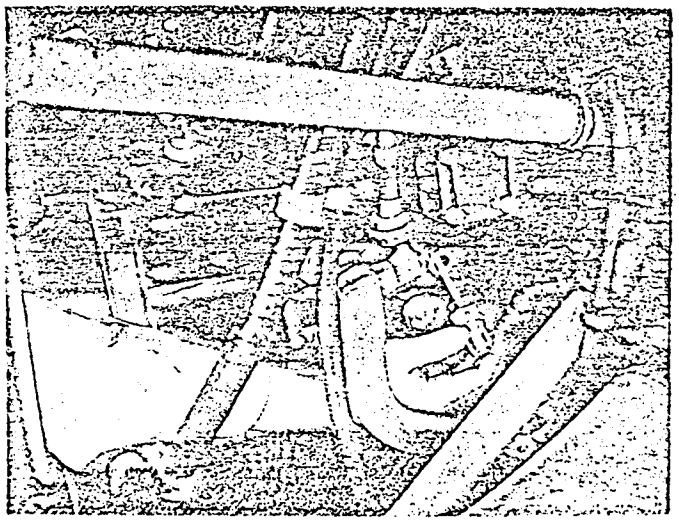

14,480

Figure 7-10 Oil Temperature Gage Resistance Bulb—Installation (Some Airplanes)

TABLE 7-21
TROUBLE SHOOTING - ENGINE CYLINDER TEMPERATURE INDICATING SYSTEM

TROUBLE	PROBABLE CAUSE	REMEDY
a. No reading, either intermittently or continuously.	Break in wire or thermocouple.	Replace wire or thermocouple.
	Defective indicator.	Replace indicator.
b. Low reading, either intermittently or permanently.	Poor connection.	Clean and tighten connections.
	Short circuit at indicator binding posts or in wires.	Repair circuit.
	Zero correction shift.	Reset corrector.

7-228. **TROUBLE SHOOTING OF ENGINE CYLINDER TEMPERATURE INDICATING SYSTEM.** Trouble shooting of the cylinder temperature indicating system is accomplished as outlined in table 7-21.

7-229. REMOVAL OF ENGINE CYLINDER TEMPERATURE THERMOCOUPLE.

a. Disconnect the thermocouple wires at the thermocouple indicator.

b. Remove the spark plug and the thermocouple.

c. Install the spark plug and torque to 300 to 360 inch-pounds.

7-230. INSTALLATION OF ENGINE CYLINDER TEMPERATURE THERMOCOUPLE.

a. Remove the spark plug from the No. 1 cylinder on engine No. 2 (right) or No. 13 cylinder on engine No. 1 (left).

b. Install the thermocouple under the spark plug.

c. Install the spark plug and torque to 300 to 360 inch-pounds.

d. Secure the thermocouple wires to the thermocouple indicator.

Note

In replacing any of the thermocouple wires, the replacement part must be identical to the original: each wire is of a different resistance and will cause incorrect instrument readings if not properly replaced. Each part is tagged with its proper length and part number.

7-231. PITOT-STATIC SYSTEM.

7-232. **GENERAL DESCRIPTION.** *(See figure 7-2.)* The pitot-static system supplies static and ram air pressures necessary for operation of the vertical velocity indicator, the airspeed indicator, and the altimeter. The system consists of two pitot-static tubes mounted on masts on the underside of the fuselage, a static selector valve, and the connecting tubing. The pitot-static tubes are protected from ice by electrical heaters which are built into the tubes.

7-233. **TROUBLE SHOOTING OF PITOT-STATIC SYSTEM.** Trouble shooting of the pitot-static system is

TABLE 7-22
TROUBLE SHOOTING - PITOT-STATIC SYSTEM

TROUBLE	PROBABLE CAUSE	REMEDY
Pitot-pressure- and static-pressure-operated instruments do not operate correctly.	Pitot lines and static lines interchanged at pitot-static head or at instruments.	Check routing of pitot and static lines.
	Pitot lines or static lines obstructed.	Disconnect instruments from pitot-static system and blow out lines with clean, dry air.
	Pitot lines or static lines crimped or collapsed.	Check pitot-static tubing; remove and replace damaged tubing.
	Static selector valve defective.	Remove and replace.

accomplished as outlined in table 7-22.

7-234. REMOVAL AND INSTALLATION OF COMPONENTS OF PITOT-STATIC SYSTEM.

7-235. REMOVAL OF PITOT-STATIC TUBE.

a. Remove the four screws which attach the tube head to the mast.

b. Pull the tube out of the mast, and disconnect the pressure and static tubing and the heater wires.

7-236. INSTALLATION OF PITOT-STATIC TUBE.

a. Connect the pressure and static tubing and the heater wires.

b. Insert the tube head into the mast and install the four screws.

7-237. REMOVAL OF STATIC PRESSURE SELECTOR VALVE.

a. Disconnect and cap the tubing at the back of the valve.

b. Remove the four mounting screws and the valve from the instrument panel.

7-238. INSTALLATION OF STATIC PRESSURE SELECTOR VALVE.

a. Position the valve on the instrument panel and install the four mounting screws.

b. Connect the tubing to the valve.

7-239. FUNCTIONAL TEST OF PITOT-STATIC SYSTEM. The functional test of the pitot-static system is accomplished in two phases: testing of the pitot system and testing of the static system.

a. Seal the pitot pressure chamber drain holes of the airspeed tube with masking tape.

b. Connect a C-1 test stand to the pitot pressure opening.

c. Slowly apply pressure of approximately 0.82-inch Hg, or 11.18 inches water, to record an indication on the airspeed indicator of 150 mph or 130 knots.

d. Close the air pressure valve on the test stand, or otherwise seal off the pressure in the pitot system.

e. After a period of 1 minute, the indicated airspeed must not have decreased more than 10 mph or 8.7 knots.

f. Tap the airspeed indicator or the instrument panel lightly during the 1-minute period leak test in order to remove any effect of friction on the pointer indication.

g. Open the valve on the test stand to release the pressure slowly.

h. Disconnect the test stand, unseal the pitot tube drain holes, and place the pitot tube protective cover over the tube.

7-240. TEST OF STATIC SYSTEM.

a. Connect a C-1 test stand to one of the static pressure sources and seal the other static pressure sources.

b. Set both altimeter pointers at ZERO.

c. Apply suction slowly in a sufficient amount to cause the altimeter pointers to indicate 1000 feet of altitude. A suction of approximately 0.82-inch Hg, or 11.18 inches water, is required.

Note

During a period of 1 minute, the altimeter pointers should not change their position by more than 150 feet.

d. Tap the altimeter indicator or the instrument panel lightly during the 1-minute period leak test in order to remove any effect of friction on the pointer indication.

e. Regulate the application and removal of suction by noting the vertical velocity indication. This reading must not exceed 2000 feet per minute.

f. Release the suction pressure slowly.

CAUTION

Regulate the releasing of the suction pressure by noting the vertical velocity indicator. The releasing rate of the suction pressure must be kept within the limits of the vertical velocity indicator.

g. Disconnect the C-1 test stand, reconnect the static piping, and remove the seals applied in step a.

7-241. VACUUM SYSTEM.

7-242. GENERAL DESCRIPTION. *(See figure 7-11.)* The vacuum system consists of a vacuum gage, two engine pumps, two vacuum relief valves, two check valves, a vacuum manifold, two air filters and the connecting tubing. The system provides the vacuum necessary to operate the autopilot, the turn-and-slip indicator, the directional indicator, and the attitude indicator.

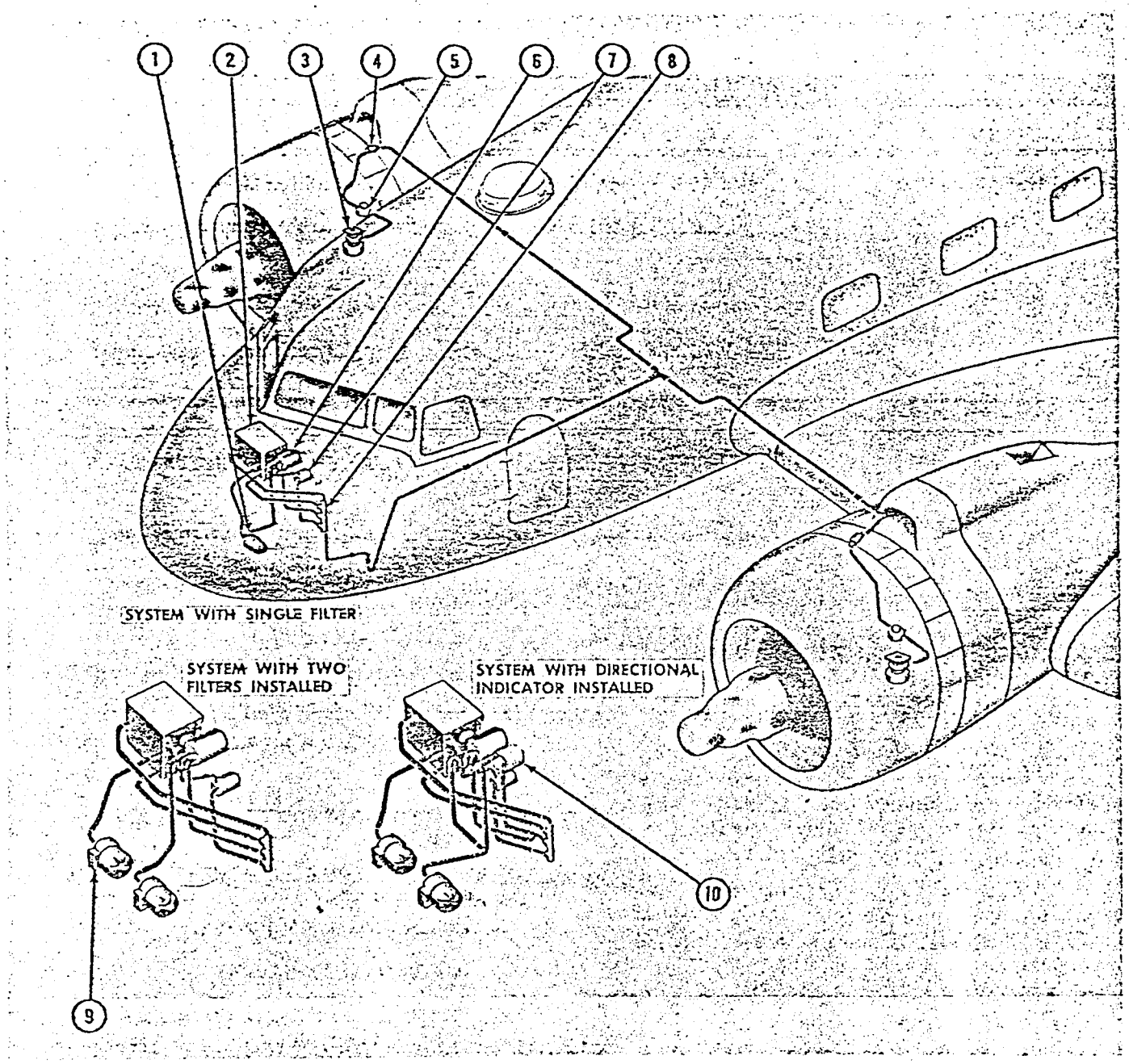

33,114

Figure 7-11. Vacuum System for Instruments and Autopilot

Key to Figure 7-11

Item	*Nomenclature*	*Item*	*Nomenclature*
1.	Vacuum Air Filter	6.	Attitude Indicator
2.	Autopilot Mounting Unit	7.	Turn-and-Slip Indicator
3.	Vacuum Pump	8.	Vacuum Instrument Manifold
4.	Eclipse Check Valve	9.	Vacuum Air Filter
5.	Eclipse Vacuum Relief Valve	10.	Directional Indicator

7-243. **TROUBLE SHOOTING OF VACUUM SYSTEM.** Trouble shooting of the vacuum system is accomplished as outlined in table 7-23.

TABLE 7-23
TROUBLE SHOOTING - VACUUM SYSTEM

TROUBLE	PROBABLE CAUSE	REMEDY
a. Insufficient vacuum.	Air intake filter clogged.	Clean filter element.
	Suction relief valve not properly adjusted.	Adjust suction relief valve.
	Vacuum pump failure.	Replace vacuum pump.
	Leak in vacuum line.	Remove and replace tubing.
	Defective suction gage.	Remove and replace.
b. Excessive vacuum.	Suction relief valve not properly adjusted.	Adjust suction relief valve.
	Defective suction relief valve.	Replace suction relief valve.
	Defective suction gage.	Remove and replace gage.

7-244. **REMOVAL AND INSTALLATION OF COMPONENTS OF VACUUM SYSTEM.**

7-245. VACUUM PUMPS.

7-246. The vacuum pumps, bolted to and driven by the engines, supply vacuum for the system. Both pumps run whenever the engines are running, and are directly lubricated by engine oil. See section III.

7-247. VACUUM CHECK VALVES.

7-248. Two check valves are installed to prevent reverse pressure from damaging the vacuum instruments in case of engine backfire or reversed rotation of the pump.

7-249. REMOVAL OF VACUUM CHECK VALVES.

a. Loosen the clamps at each end of the valve.

b. Remove the connecting hose from both valve ports.

c. Plug both hoses.

7-250. INSTALLATION OF VACUUM CHECK VALVES.

a. Position the valve and connect both hoses.

b. Tighten the clamps at each end of the valve.

7-251. VACUUM AIR FILTER.

7-252. One or two vacuum air filters *(see figure 7-12)* are installed to filter out impurities, and are located on the bulkhead forward of the instrument panel. When the airplane is flown in areas of low, dense atmospheric condition or in desert areas, or is subject to radical, quick temperature changes, check the filter at specified intervals.

7-253. REMOVAL OF VACUUM AIR FILTER.

a. Disconnect the vacuum piping.

b. Remove the two mounting bolts, and remove the filter.

7-254. INSTALLATION OF VACUUM AIR FILTER.

a. Position the filter on the bracket, and secure it with the two mounting bolts.

b. Connect the vacuum piping.

7-255. VACUUM RELIEF VALVE.

7-256. Two vacuum relief valves *(see figure 7-13)* are incorporated in the system, one on the aft side of each engine. A slotted adjustment screw on the top of each valve permits adjustment to obtain the proper amount of vacuum.

7-257. REMOVAL OF VACUUM RELIEF VALVE.

a. Disconnect and cap the piping to the valve ports.

b. Support the valve and remove the mounting bolts.

7-258. INSTALLATION OF VACUUM RELIEF VALVE.

a. Position the valve and install the mounting bolts.

b. Connect the piping to the valve ports.

7-259. VACUUM MANIFOLD.

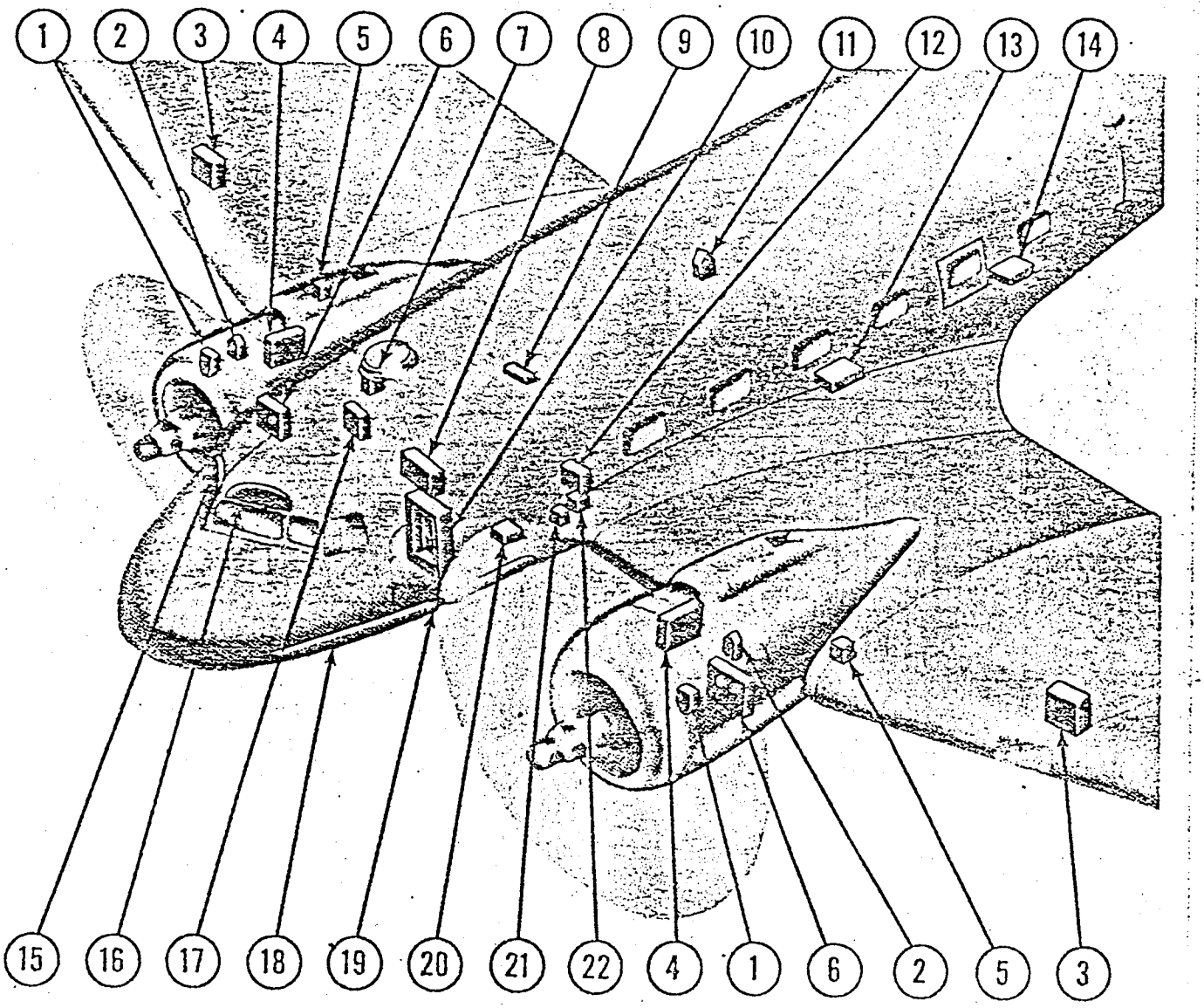

14,477

Figure 8-3. Control Panels and Junction Boxes

Key to Figure 8-3

Item	Nomenclature	Item	Nomenclature
1.	Engine Section Pull Box	13.	Center Parapack Junction Box (C-47 airplanes only)
2.	Ignition Plug Junction Box	14.	Aft Parapack Junction Box (C-47 airplanes only)
3.	Outer Wing Junction Box (C-47 airplanes only)	15.	Right Electrical Control Panel
4.	Inboard Nacelle Junction Box	16.	Left Electrical Control Panel
5.	Outboard Nacelle Junction Box	17.	Radio Junction Box
6.	Firewall Junction Box	18.	Left Electrical Tunnel
7.	Interphone Junction Box	19.	Tunnel Junction Box (C-47 airplanes only)
8.	Power System Junction Box (some airplanes)	20.	Battery Cart Receptacle Box (C-117 airplanes only)
9.	Center Wing Junction Box (C-117 airplanes only)	21.	Center Wing Ignition Junction Box (C-117 airplanes only)
10.	Main Electrical Junction Box	22.	Center Wing Generator Junction Box (C-47 airplanes only)
11.	Windshield and Carburetor Anti-Icing Tank Junction Box (C-117 airplanes only)		
12.	Center Wing Junction Box (C-47 airplanes only)		

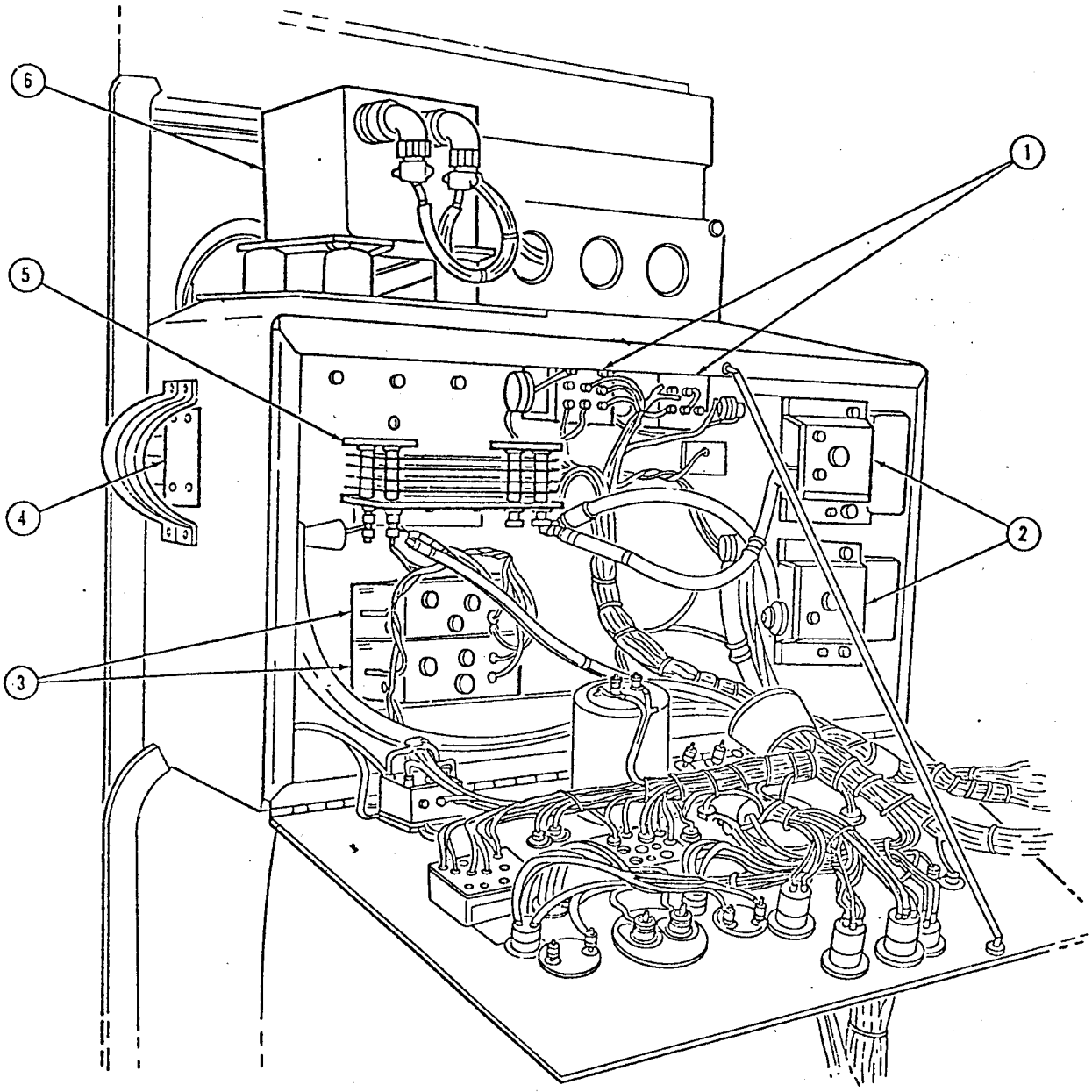

1. Generator Failure Warning Relays
2. Reverse Current Relays
3. Inverter Failure Warning Relays
4. Spare Inverter Circuit Breaker
5. Generator Equalizer Resistors
6. Fire Detection Relays

Figure 8-4. Power Systems Junction Box (Airplanes with Bus Priority System)

35.615

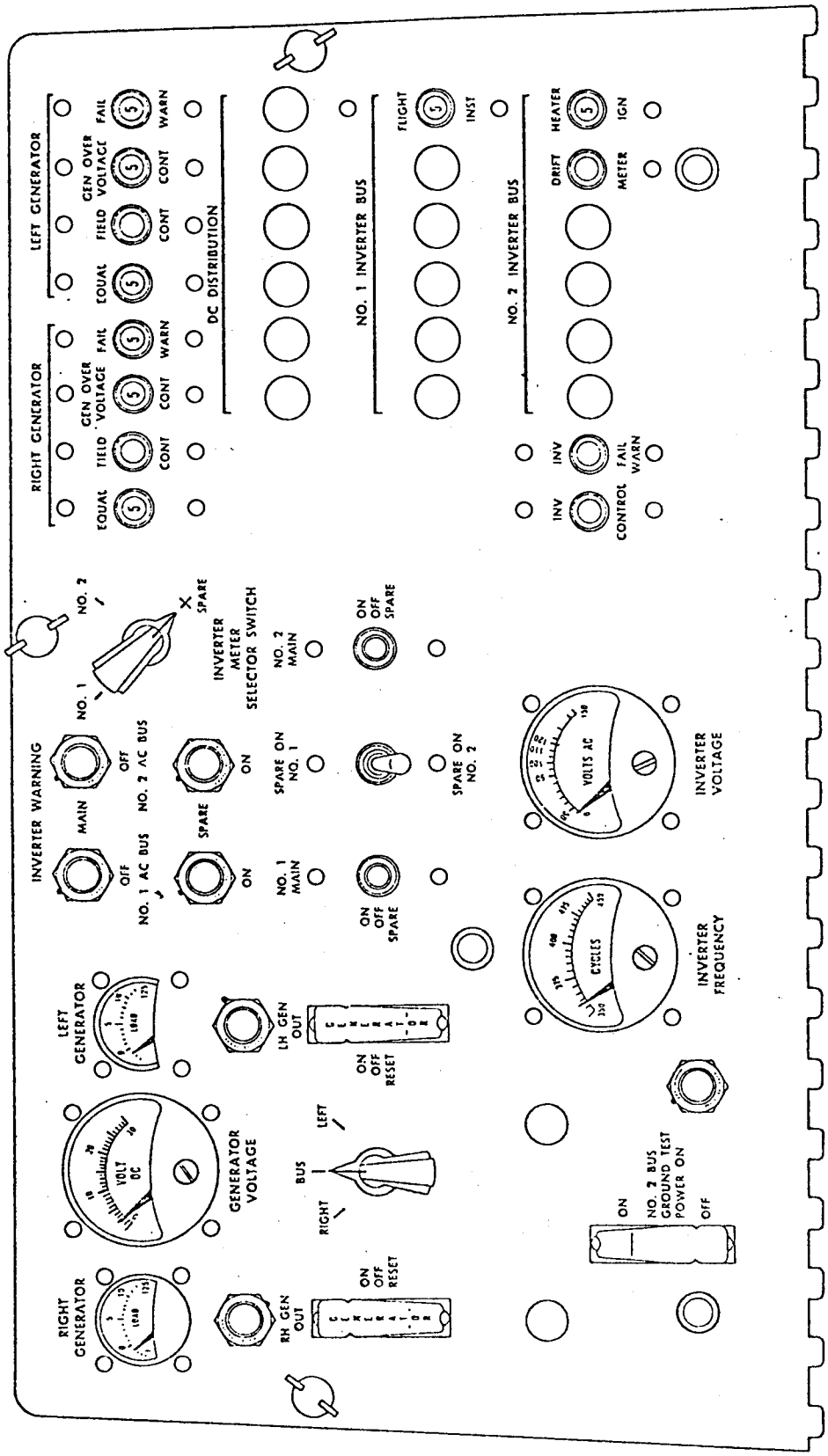

Figure 8-5. Power Systems Junction Box Control Panel (Airplanes with Bus Priority System)

35.616

8-28. ELECTRICAL POWER DISTRIBUTION AND SUPPLY.

8-29. POWER DISTRIBUTION SYSTEM.

8-30. GENERAL DESCRIPTION. *(See figure 8-3.)* The 24-volt d-c power provided by two batteries and two generators is distributed to the various electrical and electronic systems through the fuse or circuit breaker bus, located in the main electrical junction box, and through a bus located in each firewall junction box. Some C-47 airplanes are modified by the installation of higher capacity generators and three inverters *(see figures 8-4 through 8-6)*. The bus system is reworked to provide priority for certain essential equipment during single-engine operation. Certain controls, instruments, and the necessary wiring are relocated in this installation. The generator and inverter controls are transferred from the overhead electrical control panels and the main electrical junction box to the power systems junction box control panel directly above the main electrical junction box. The No. 1 and No. 2 radio busses are located in the radio junction box. The two main inverters and circuit breakers are located in the lavatory compartment in the aft section of the airplane. The spare inverter is mounted below the radio operator's seat. The circuit breaker for the spare inverter is located on the inboard side of the power systems junction box control panel. The d-c power is a 28-volt, single-wire, ground-return type. Power is supplied by two 200-ampere engine-driven generators. All wiring from the fuselage to the wings is connected through the terminal strips located in the left wiring tunnel. On some C-47 airplanes, all wiring is routed in conduit; in other airplanes of the C-47 series, the conduit is only provided for wiring from the engine section. On C-117 airplanes, all cabin area wiring, ignition system wiring, and engine section wiring (with the exception of the generator circuits and the high-blower warning light circuits) are routed through conduit.

Note

The No. 2 bus ground test power switch must be placed in the ON position and lockwired.

WARNING

If a single generator fails, turn off all electrical loads on the No. 2 bus in the main electrical and radio junction boxes, except those circuit breakers labeled radio power No. 2 bus, UHF communications, cockpit instrument floodlights, marker beacon, windshield defroster motor, and flux gate compass.

8-31. REMOVAL AND INSTALLATION OF COMPONENTS OF POWER DISTRIBUTION SYSTEM.

8-32. MAIN ELECTRICAL JUNCTION BOX.

(See figure 8-6.)

8-33. The main electrical junction box is installed on the forward face of the station 117 bulkhead just inboard of the pilot's cargo door. On some airplanes it is installed in the left baggage compartment. A spring-hinged door, which opens forward from the top of the box cover, provides access to the two main line generator switches and to the circuit breaker panel. When opened, the hinged door actuates a microswitch to illuminate a light located in the top of the box. Locks secure the junction box cover assembly to provide easy access to the units mounted in the box. The junction box contains one battery connector relay, two generator voltage regulators, terminal strips, and the circuit breaker panel. Some early model airplanes are equipped with a fuse panel installation and a spare fuse stowed for each circuit. To provide adequate cooling in the junction box, a half-section air venturi assembly is secured to the left side of the fuselage, at station 136, and connected by flexible tubing to the inlet on top of the junction box.

8-34. The circuit breakers, located in the junction box, open when the current passing through exceeds the designed capacity, and are reset manually. To absorb current surges, the designed capacity of the circuit breakers incorporate a thermal time delay which is momentarily greater than the rated capacity and only an excessive current flow, as caused by a direct short circuit, will instantly trip the circuit breakers. The circuit breakers have *positive* spring-loaded locking action; therefore, to reset, push the lever or button to ON, but do not hold in the ON position for more than 1 second. If the circuit breaker will not remain momentarily in the ON position, determine if the respective circuit breaker is faulty by removing all power from the airplane and again resetting. If circuit breaker remains in the ON position, the trouble is not in the circuit breaker.

CAUTION

When resetting a circuit breaker, DO NOT hold it in the ON position for more than 1 second, as serious damage will occur to the wiring, components, and to the circuit breaker.

8-35. REMOVAL OF MAIN ELECTRICAL JUNCTION BOX.

a. Turn the master battery switch OFF, then disconnect the batteries and remove all external power from the airplane.

b. Disconnect all wiring from the junction box.

c. Remove the support angles and flooring from around the base of the junction box.

d. Remove the attaching screws from the flanges of the junction box, and carefully remove the assembly.

8-36. INSTALLATION OF MAIN ELECTRICAL JUNCTION BOX.

a. Route all wires into the junction box, then place it in position.

b. Secure the junction box with the mounting screws.

c. Connect all wiring as indicated on the chart cemented to the junction box cover, and check all circuits for proper continuity as shown in the wiring diagrams, Section XII. Secure all wiring with waxed cord ties and the support clamps so that the wire runs do not ride or chaf on adjacent structure.

d. Install all attaching and support structure, and the flooring in the area.

e. Install the junction box cover and secure the lock fasteners.

f. Restore electrical power to the airplane, and conduct a functional test of all affected systems.

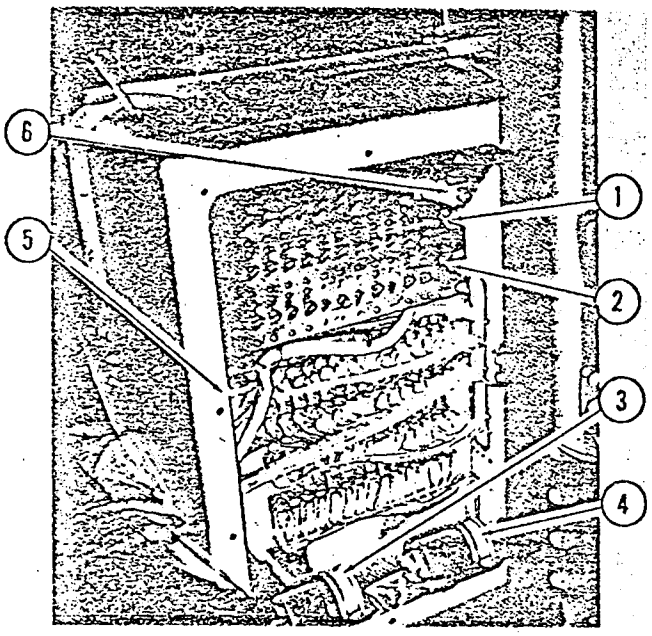

35,819

Figure 8-6. Main Electrical Junction Box (Original Configuration)

Key to Figure 8-6

Item	*Nomenclature*
1.	Left Generator Main Line Switch
2.	Right Generator Main Line Switch
3.	Voltage Regulator, Left Side
4.	Voltage Regulator, Right Side
5.	Battery Connector Relay
6.	Junction Box Light Switch

8-37. POWER SYSTEMS JUNCTION BOX (SOME AIRPLANES). The power systems junction box (*see figure 8-4*) contains generator failure warning relays, generator equalizer resistors, reverse-current relays, inverter failure warning relays, a spare inverter circuit breaker, and fire detection relays.

8-38 REMOVAL OF POWER SYSTEMS JUNCTION BOX.

a. Turn the master battery switch OFF and remove all external power from the airplane.

b. Disconnect all wiring from the junction box.

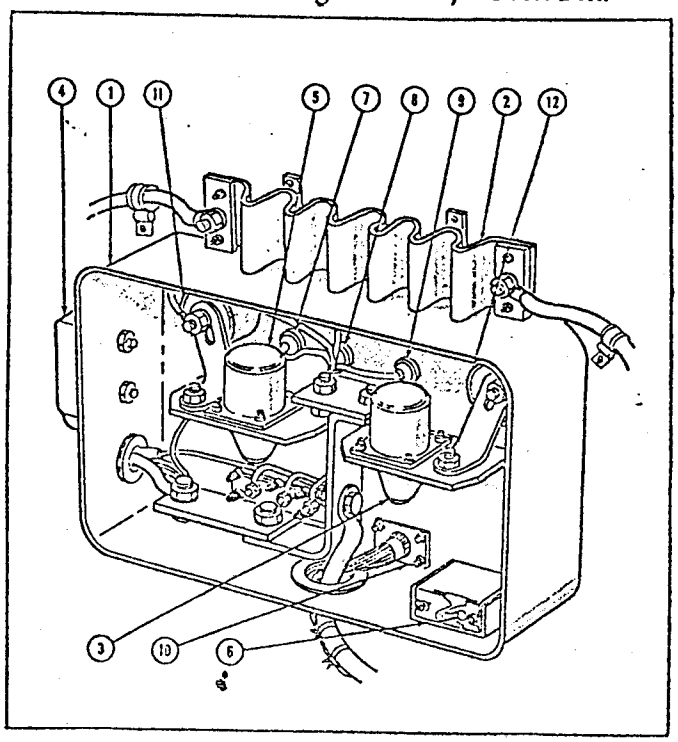

33,160

Figure 8-7. Firewall Junction Box

Key to Figure 8-7

Item	*Nomenclature*
1.	Firewall Junction Box
2.	Generator Resistor
3.	Propeller Feathering Relay
4.	Generator Noise Capacitor
5.	Starter Relay
6.	Landing Light Circuit Breaker
7.	Fire Detector Connector
8.	Oil Dilution Connector
9.	Fire Detector Connector
10.	Engine Circuits Connector
11.	Starter Connector
12.	Propeller Feathering Connector

c. Remove the 12 bolts securing the junction box assembly to the bulkhead and intercostals.

d. Remove the junction box.

8-39. INSTALLATION OF POWER SYSTEMS JUNCTION BOX.

a. Position the junction box and secure it with the mounting bolts.

b. Connect the electrical wiring.

c. Restore electrical power and test the electrical system.

8-40. FIREWALL JUNCTION BOXES.
(See figure 8-7.)

a. A firewall junction box, mounted on the aft side of each nacelle firewall in the main landing gear wheel well, contains a starter relay, a propeller feathering relay, a landing light circuit breaker (or fuse), bus bars, and terminal strips. In later airplanes, a current limiter and a generator noise capacitor are installed. To provide a fire seal, all engine circuits pass through firewall disconnect assemblies. All connector assemblies, except those for the ignition switch and generator circuits, are located in the firewall junction box. The box cover is secured by six lock fasteners, and is equipped with a rubber moisture seal.

8-41. REMOVAL OF FIREWALL JUNCTION BOX.

a. Turn the master battery switch OFF, and remove all external power from the airplane.

b. Remove the junction box cover, and disconnect the wiring.

c. Remove the electrical receptacle connectors and the attaching hardware.

d. Remove the junction box from the firewall after removing the mounting screws, nuts, and washers.

8-42. INSTALLATION OF FIREWALL JUNCTION BOX.

a. Position the junction box on the firewall and secure with the attaching screws, washers, and nuts. Install the screws from the engine side of the firewall.

b. Install the electrical receptacle connectors with the mounting hardware, installing the screws from the engine side of the firewall.

c. Connect the wiring as indicated on the chart cemented to the inside of the cover, and check all wiring for correct continuity as shown in wiring diagrams, Section XII.

d. Restore electrical power to the airplane, and conduct a functional test of all affected circuits.

e. Install the cover and secure the lock fasteners.

8-43. ENGINE SECTION PULL BOX. An engine section pull box is fastened to the outboard side of each engine mount frame. The wires to the pull box are routed in flame-proof flexible conduit from the firewall connector through the pull box, and then through individual flexible conduits to the terminal points.

8-44. REMOVAL OF ENGINE SECTION PULL BOX.

a. Turn the master battery switch OFF, and remove all external power.

b. Remove the pull box cover by releasing the five lock fasteners.

c. Disconnect all connector plugs, the cylinder head temperature thermocouple, and the propeller feathering control wire and flexible conduit. Remove all clamps and ties securing the harness and box.

d. Remove the four bolts and attaching hardware which secure the box to the engine mount frame, then remove the pull box and harness.

8-45. INSTALLATION OF ENGINE SECTION PULL BOX.

a. Connect, but do not tighten, all disconnect fittings.

b. Position the pull box on the engine mount frame so that the flexible conduits are positioned without sharp bends or kinks.

c. Clamp the pull box to the engine mount frame with the attaching hardware.

d. Complete all connections. Secure all connectors with steel lockwire and secure all conduits.

e. Install the box cover, restore electrical power to the airplane, and conduct a functional test of all affected circuits.

8-46. NACELLE JUNCTION BOXES. Two junction boxes, one located inboard and one outboard of the main landing gear, are mounted in each nacelle wheel well. The outboard nacelle junction box contains a terminal strip as a disconnect point for the outer wing panel wiring. The inboard nacelle junction box contains the landing light relay and terminal strips.

8-47. OUTER WING JUNCTION BOXES.

8-48. On C-47 airplanes, one junction box is mounted in each outer wing panel just aft of the landing light assembly. The junction box, accessible through the landing light access door located on the top of the wing, contains a terminal strip for connecting the outer wing and wing tip wiring.

8-49. CENTER WING JUNCTION BOXES.

8-50. One center wing junction box, one ignition switch wiring junction box, and one generator system

junction box are installed in the forward area of the center wing section at the fuselage. These junction boxes contain terminal strips to facilitate maintenance. Remove the left fillet fairing for access to the junction boxes.

8-51. FUSELAGE TUNNEL GENERATOR CIRCUIT JUNCTION BOX (C-47 AIRPLANES).

8-52. The fuselage tunnel generator circuit junction box is mounted in the left fuselage tunnel, and contains a terminal strip to provide a connection point between the center wing generator junction box and the main electrical junction box.

8-53. PARAPACK JUNCTION BOXES.
(See figures 8-8 and 8-9.)

8-54. One parapack junction box, mounted in the aft section of the center wing section, contains the parapack salvo relay, four parapack release relays (for the four forward parapacks), and terminal strips. One parapack junction box, mounted in the lower section

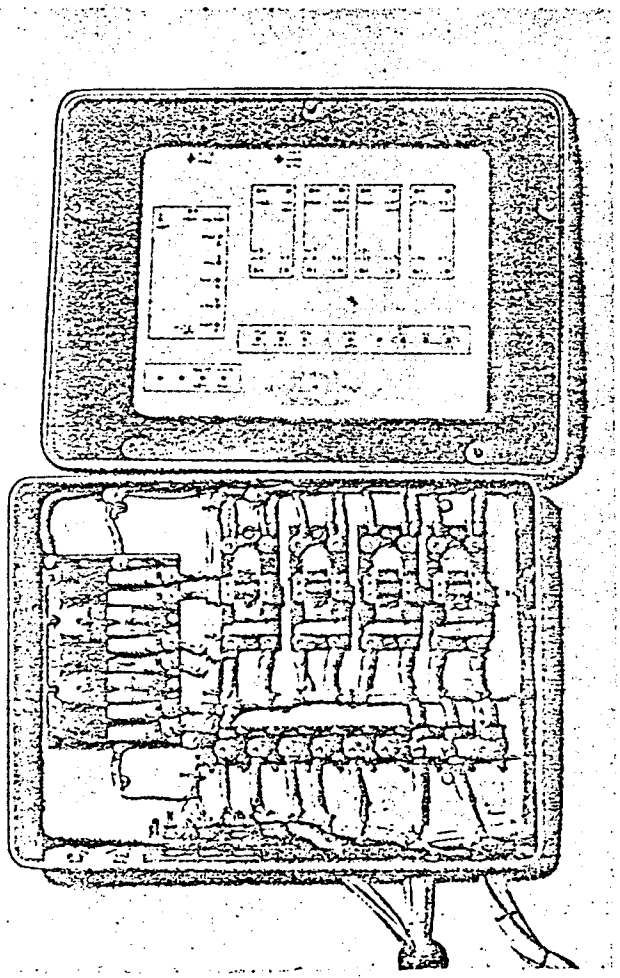

33,161

Figure 8-8. Center Parapack Junction Box (C-47 Airplanes)

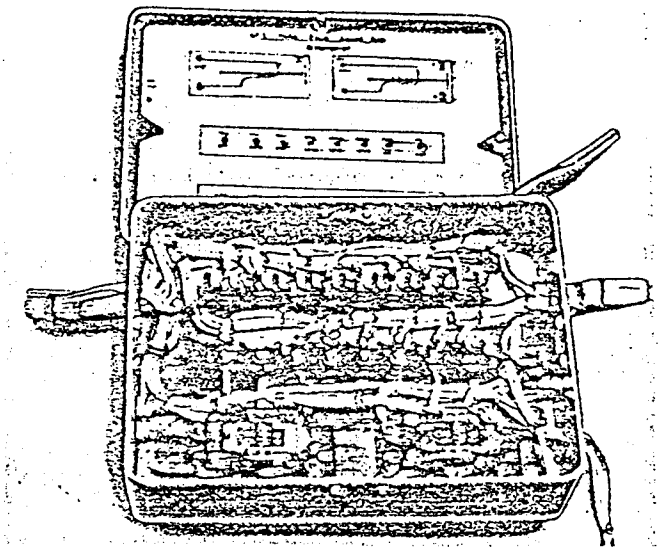

33,162

Figure 8-9. Aft Parapack Junction Box (C-47 Airplanes)

of the fuselage aft of the center wing section, contains two parapack release relays (for the two aft parapacks) and terminal strips.

8-55. REMOVAL OF PARAPACK JUNCTION BOXES.

a. Turn the master battery switch to OFF, and remove all external power.

b. Remove the main cabin flooring directly above the junction box to be removed, and remove the junction box cover.

c. Disconnect all wiring.

d. Remove the mounting screws and the junction box.

8-56. INSTALLATION OF PARAPACK JUNCTION BOXES.

a. Position the junction box and secure with the mounting screws.

b. Connect the wiring as indicated on the chart cemented to the inside of the cover, and then check all wiring for continuity as shown in wiring diagrams, Section XII. Secure all wire runs with clamps and waxed cord ties, so that all wiring is protected from chafing on adjacent structure.

c. Restore power to the airplane, and conduct a functional test of the system. Remove power after completion of tests.

d. Install the junction box cover and the cabin flooring.

8-57. PILOT'S LEFT ELECTRICAL CONTROL PANEL.
(See figure 8-10.)

8-58. The pilot's left electrical control panel is mount-

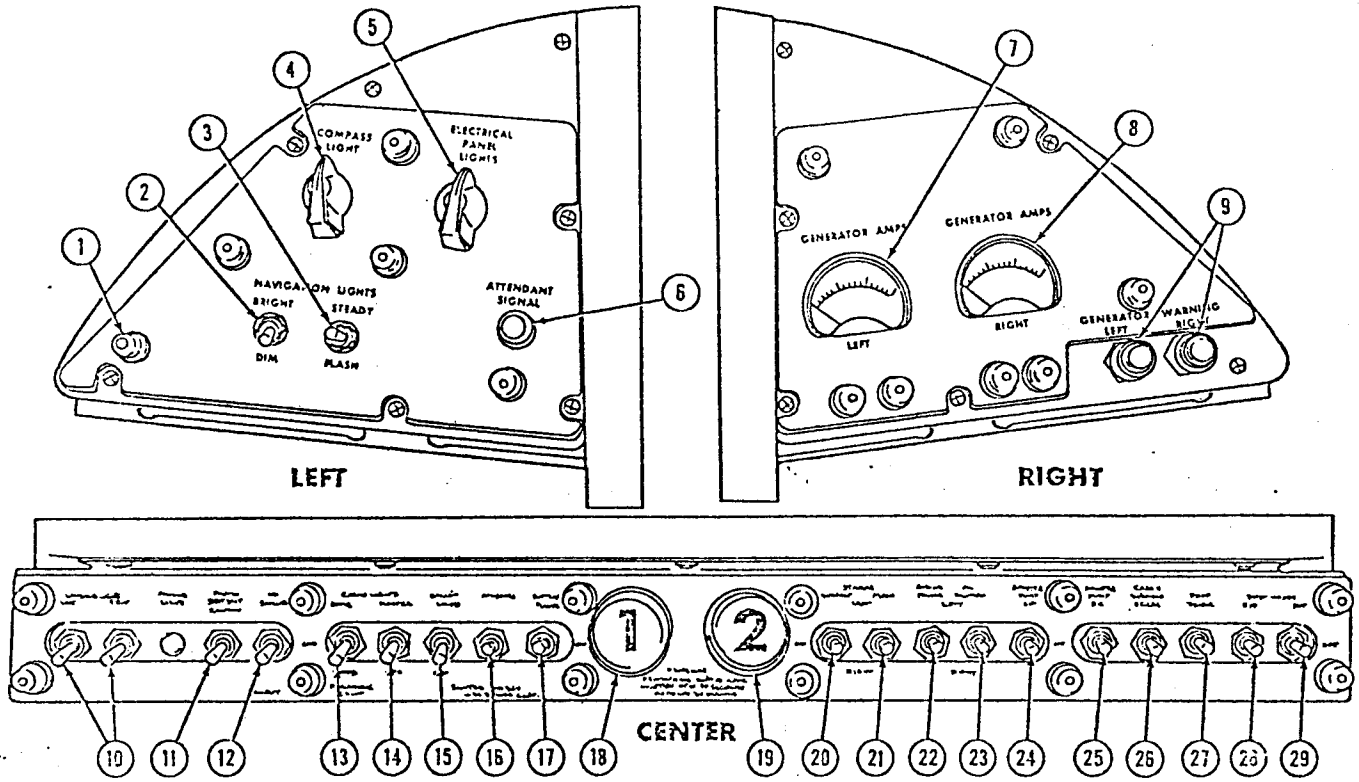

1. Plastic Panel Light (typical)
2. Navigation Lights Dimming Switch
3. Navigation Lights Flasher Control Switch
4. Compass Light Rheostat
5. Electrical Panel Lights Rheostat
6. Attendant Signal Switch (C-117 airplanes)
7. Left Generator Ammeter
8. Right Generator Ammeter
9. Generator Warning Lights
10. Landing Light Switches
11. Paratroop Warning Switch (C-47 airplanes) FASTEN SEAT BELTS Light Switch (C-117 airplanes)
12. Emergency Alarm Switch (C-47 airplanes) NO SMOKING Light Switch (C-117 airplanes)
13. Parapack Salvo Switch (C-47 airplanes) Cabin Dome Lights Switch (C-117 airplanes)
14. Cabin Lights Master Switch (C-117 airplanes)
15. Flight Compartment Lights Switch
16. Inverter Switch
17. Battery Master Switch
18. Left Propeller Feathering Switch
19. Right Propeller Feathering Switch
20. Starter Energize Switch
21. Starter Mesh Switch
22. Engine Primer Switch
23. Engine Oil Dilution Switch
24. Left Fuel Booster Pump Switch
25. Right Fuel Booster Pump Switch
26. Carburetor and Windshield Anti-Icing Switch
27. Propeller Anti-Icing Switch
28. Forward Pitot Heater Switch
29. Aft Pitot Heater Switch

33,163

Figure 8-10. Pilots' Electrical Control Panels

d directly in front of the pilot's seat and above the left vindshield section. It contains the compass light rheo-, the instrument panel lights rheostat, and two avigation light control switches. On all C-117 air-lanes, the panel also contains the attendant's signal vitch.

-59. REMOVAL OF PILOT'S LEFT ELECTRICAL CONTROL PANEL.

a. Turn the master battery switch OFF, and remove ll external power.

b. Remove the mounting screws and carefully move he panel out enough to disconnect the wiring.

c. Disconnect the wiring and remove the panel ssembly.

-60. INSTALLATION OF PILOT'S LEFT ELECTRICAL CONTROL PANEL.

a. Connect all wiring as shown in the wiring dia-grams, Section XII, and then check all circuits for proper continuity. Make certain that all wire runs are secured with waxed cord and clamps to clear adjacent structure.

b. Position the panel and install the mounting crews.

c. Restore electrical power and conduct a functional est of the affected systems.

8-61. PILOT'S RIGHT ELECTRICAL CONTROL PANEL.
(See figure 8-10.)

8-62. The pilot's right electrical control panel is mounted directly in front of the co-pilot's seat and above the right windshield section. It contains two ammeters, two generator warning lights, and plastic panel lighting. On airplanes with bus priority system, the pilot's right overhead control panel *(see figure 8-11)* contains the inverter and generator failure warning lights.

8-63. REMOVAL AND INSTALLATION OF PILOT'S RIGHT ELECTRICAL CONTROL PANEL. Removal and installation of the pilot's right electrical control panel is similar to the procedure outlined in paragraphs 8-59 and 8-60.

8-64. PILOT'S CENTER ELECTRICAL CONTROL PANEL.
(See figure 8-10.)

8-65. The pilot's center electrical control panel is mounted in front of the pilot's seat above the windshield. It contains all the electrical control switches necessary for the operation of the respective systems.

8-66. REMOVAL AND INSTALLATION OF PILOT'S CENTER ELECTRICAL CONTROL PANEL. Removal and installation of the center electrical control

TABLE 8-6

TROUBLE SHOOTING - BATTERY SYSTEM

TROUBLE	PROBABLE CAUSE	REMEDY
a. System inoperative.	Discharged battery.	Replace battery.
	Faulty connector.	Replace relay.
	Faulty switch or wiring.	Replace switch, or correct wiring.
b. Battery will not hold charge.	Battery worn out.	Replace battery.
c. Battery low.	Battery not used for long time.	Battery may require removal and recharging if not used for one week or more, depending upon temperature.
	Equipment left on accidentally.	Remove and recharge battery.
	Battery discharge greater than input.	Reduce use of battery on ground (such as starters, lighting, etc) by using external power supply.
	Battery worn out or damaged.	Replace battery.
	Charge rate too low.	Adjust voltage regulators.

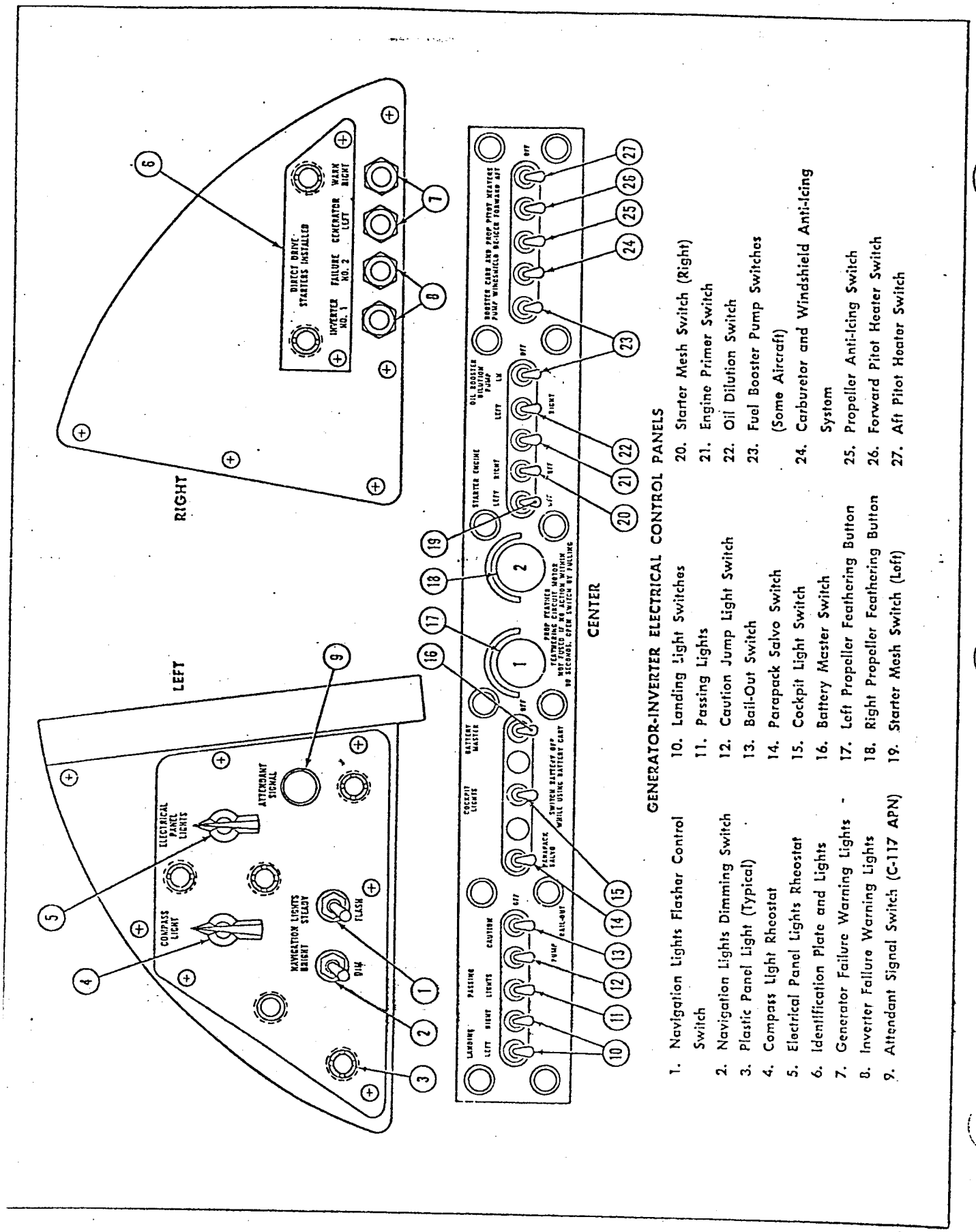

GENERATOR-INVERTER ELECTRICAL CONTROL PANELS

1. Navigation Lights Flasher Control Switch
2. Navigation Lights Dimming Switch
3. Plastic Panel Light (Typical)
4. Compass Light Rheostat
5. Electrical Panel Lights Rheostat
6. Identification Plate and Lights
7. Generator Failure Warning Lights
8. Inverter Failure Warning Lights
9. Attendant Signal Switch (C-117 APN)
10. Landing Light Switches
11. Passing Lights
12. Caution Jump Light Switch
13. Bail-Out Switch
14. Parapack Salvo Switch
15. Cockpit Light Switch
16. Battery Master Switch
17. Left Propeller Feathering Button
18. Right Propeller Feathering Button
19. Starter Mesh Switch (Left)
20. Starter Mesh Switch (Right)
21. Engine Primer Switch
22. Oil Dilution Switch
23. Fuel Booster Pump Switches (Some Aircraft)
24. Carburetor and Windshield Anti-Icing System
25. Propeller Anti-Icing Switch
26. Forward Pitot Heater Switch
27. Aft Pitot Heater Switch

35,617

Figure 8-11. Pilots' Electrical Control Panels (Airplanes with Bus Priority System)

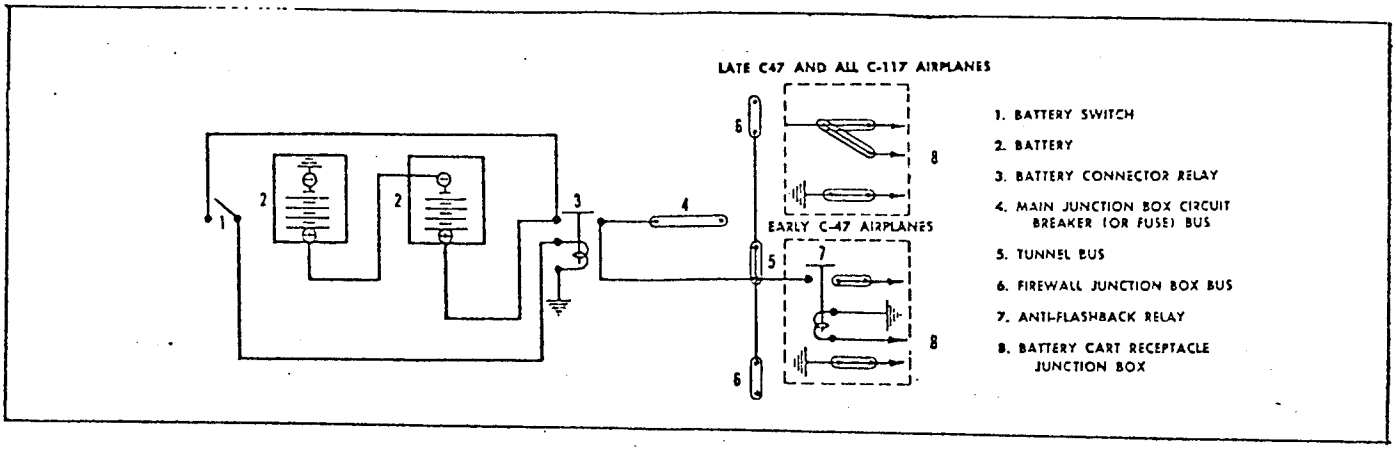

Figure 8-12. Battery System Schematic 14,486

TABLE 8-6 (Continued)

TROUBLE	PROBABLE CAUSE	REMEDY
d. Battery life is short.	Battery is overcharging, causing buckled plates, shedding of active plate material, oxidation of grids, excessive loss of water, and excessive electrolyte gassing.	Adjust voltage regulators.
	Level of electrolyte below top of plates, but specific gravity correct.	Fill cell to proper level with distilled water.
	Sulphated plates (occurs when battery is left in discharged condition).	Replace batteries.
e. Compound on top of battery cracks or melts.	Excessive charging rate.	Adjust voltage regulators.
	Electrolyte on top of cells caused by overfilling may short-circuit battery. Resultant heat will soften compound.	Be sure vent pipe is clean. Remove electrolyte from top of battery and neutralize with sodium bicarbonate; rinse with water.
f. Frozen battery.	Adding water in cold weather without charging battery enough to mix water and electrolyte.	Replace battery if damaged; if undamaged, recharge.
	Low specific gravity of battery.	Replace battery if damaged; if undamaged, recharge.
g. Electrolyte runs out of vent caps.	Too much water added.	Remove excess with self-leveling syringe.
	Charging rate high.	Adjust voltage regulators.
h. Battery gasses excessively.	Charging rate high.	Adjust voltage regulators.
	Bad cell, or weak battery.	Replace battery.
i. Battery consumes excessive water.	Charging rate high.	Adjust voltage regulators.
	Cracked cell jar.	Replace battery.

panel is similar to the procedure outlined in paragraphs 8-59 and 8-60, except that the batteries must be disconnected before proceeding with the work.

8-67. BATTERY SYSTEM.
(See figure 8-12.)

8-68. **GENERAL DESCRIPTION.** The battery system supplies 24-volt d-c power from two 12-volt batteries connected in series, to the main electrical bus through a battery connector relay which is controlled by the master battery switch mounted on the pilot's center electrical panel. External power, supplied from a battery cart or rectifier unit, connects to the d-c bus through a receptacle mounted on the underside of the fuselage aft of the radio compass loop antenna. Refer to Section XII for the battery system wiring diagram.

8-69. **TROUBLE SHOOTING OF BATTERY SYSTEM.** Trouble shooting of the battery system is accomplished as outlined in table 8-6.

8-70. **REMOVAL AND INSTALLATION OF COMPONENTS OF BATTERY SYSTEM.**

8-71. BATTERIES.
(See figure 8-13.)

8-72. Two 12-volt, 88 ampere-hour batteries are mounted on separate spring-loaded platform elevators which are stowed behind hinged doors on the underside of the fuselage forward of the radio compass loop antenna. For maintenance, lower the batteries on the elevator assemblies until clear of the fuselage and in this position with safety latches attached to the aft elevator support tubes. Special terminal connectors installed on the battery contact self-centering receptacles, located in the fuselage battery compartment, when the elevator is raised and secured with lock pins.

8-73. REMOVAL OF BATTERY.

a. Turn the master battery switch OFF.

b. Open the battery elevator access door by releasing the six lock fasteners.

c. Remove the safety pin from the release handle.

d. Pull the release handle, and then lower the platform elevator until the down safety latch engages.

WARNING

Make certain that the safety latch is fully engaged before removing the battery. The elevator assembly is strongly springloaded and will injure personnel if the safety latch disengages. Before working in the battery compartment area, secure the safety latch firmly in the locked position with steel lockwire.

e. Cut the lockwire and unscrew the wingnuts until the battery hold-down bolts are loose, then remove them from the battery.

f. Remove the battery.

8-74. INSPECTION AND MAINTENANCE OF BATTERY. Remove any corrosion from the battery terminal connectors with a stiff bristled brush (do not use a wire brush), then apply a neutralizing solution of sodium bicarbonate and water to the areas. While cleaning, the vent plugs must remain securely in place to protect the battery solution. After cleaning the battery, make certain that the vent holes in the plugs are clear. Prior to installing the battery, secure the rubber vent caps over the vent plugs and place the ends of the vent overflow tubes in the sump container which is strapped to the outer side of the battery. Check the sump container for cleanliness and security of mounting. Coat the battery terminal connectors liberally with petrolatum to prevent corrosion.

8-75. Check the specific gravity of each battery cell with a hydrometer. Replace the battery, if the corrected specific gravity for any one cell does not indicate within the range of 1.240 and 1.310. To obtain a correct reading, use a hydrometer calibrated to compensate for electrolyte temperature, as the electrolyte strength-to-specific gravity ratio varies with change in temperature.

8-76. Check the level of electrolyte in each cell. If it is too low, fill with distilled water as follows:

a. Fill a self-leveling syringe (provided in the type D-1 battery servicing kit) with distilled water to replenish the cell.

b. Hold the syringe vertical (regardless of the attitude of the battery) with the tip touching the battery protector plate, and withdraw any excess water into the syringe until air is drawn into the syringe through the small vent in the side of the tip.

c. If no self-leveling syringe is available, use a standard filling syringe to add distilled water to each cell 3/8 inch above the protector plate.

CAUTION

Do not add water higher than 3/8 inch above the protector plate, as a higher level will cause the excess electrolyte to overflow when the battery is charging.

8-77. INSTALLATION OF BATTERY.

a. Install the battery on the elevator tray and tighten the holddown bolts. Secure the wingnuts with lockwire.

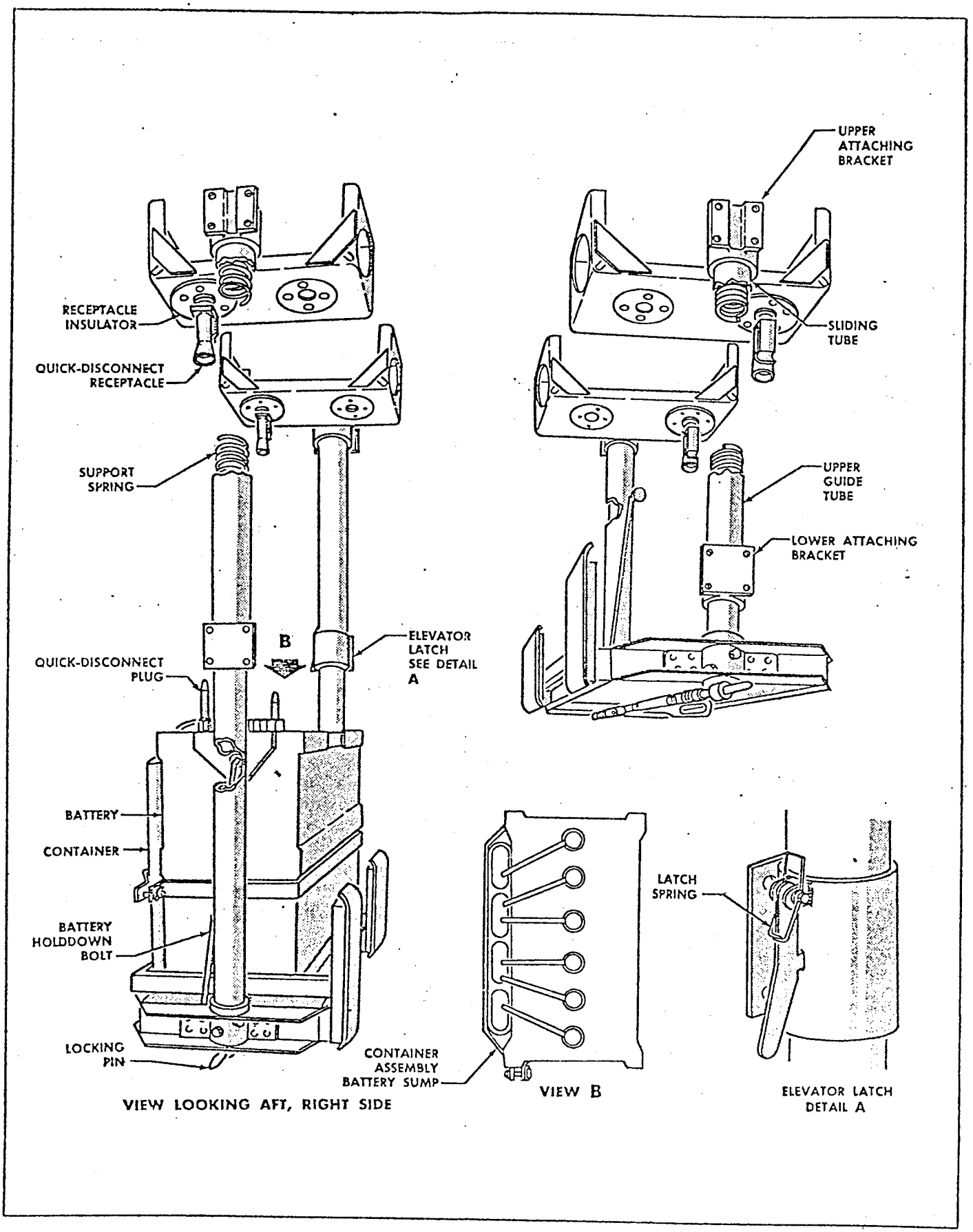

Figure 8-13. Battery and Battery Elevator

V2-47

b. Disengage the safety latch and push the battery elevator into position.

c. Close the release handle and make certain that the spring-loaded locking pins are fully engaged.

d. Lock the release handle and insert the safety pin.

e. Close and secure the battery access door.

Note

When installing the terminal connectors on the batteries, torque to 50 inch-pounds and then secure with lockwire.

8-78. BATTERY ELEVATOR.
(See figure 8-13).

8-79. A battery elevator is installed in each battery compartment located on either side of the fuselage centerline just forward of the radio compass loop antenna. Each elevator has two telescoping support tubes which contain heavy coil springs to assist in raising the battery. To absorb any electrolyte leakage, each elevator wooden platform is padded with felt impregnated with sodium bicarbonate. A tube from each battery compartment vents fumes overboard through a vent in the fuselage plating.

8-80. REMOVAL OF BATTERY ELEVATOR.

a. Remove the battery as described in paragraph 8-83.

b. Remove the screws securing the wooden platform to the support frame, and remove the platform.

c. Remove four bolts from the two mounting flanges of each elevator telescoping support tube.

WARNING

Retract the elevator to relieve the spring tension before removing the mounting bolts from the forward support tube, or otherwise serious injury to personnel may result.

d. Remove the elevator assembly from the battery compartment, and retain the 16 spacers which are installed between the tube mounting flanges and the compartment structure.

e. Remove the platform support frame from the support tubes after removing the two bolts securing each tube.

f. Unhook and remove each retracting spring from the retaining bolt at the top of the support tube.

8-81. INSPECTION AND MAINTENANCE OF BATTERY ELEVATOR. Thoroughly clean all corrosion from the terminal connectors, connector mounting brackets, the compartment structure, and the elevator assembly. Inspect the connectors and braided wire for damage and for security of mounting. Check the connector centering springs for condition. Replace all corroded or damaged hardware and all seriously corroded components. Replace the retracting spring if damaged, weak, or corroded. Check the safety latch for security, damage, and ease of operation. Check the locking handle linkage, springs, and pins for damage, security, and ease of operation.

8-82. Paint the battery compartment surface and all parts (except the inner support tube sliding surfaces, terminal connectors, and locking pins) with acid-resistant lacquer, Federal Specification TT-L-54. After removing all corrosion, coat the battery terminal connectors with petrolatum. Coat the sliding surfaces of the inner support tubes with graphite stick.

8-83. INSTALLATION OF BATTERY ELEVATOR.

a. Assemble the elevator platform support frame to the support tubes, using the top mounting bolt as the lower retaining bolt for the retracting spring.

b. Place the top hook of the retracting spring over the retaining bolt at the top of the support tube.

c. Locate the spacers and install the elevator assembly with the 16 bolts, nuts and washers.

d. Install the wooden platform with the attaching screws, nuts and washers.

e. Install the battery as described in paragraph 8-77.

8-84. BATTERY CONNECTOR RELAY.
(See figure 8-6)

8-85. One battery connector relay, installed in the main junction box, provides remote control of the battery circuit from the master battery switch located on the center electrical panel in the flight compartment. The relay consists of a holding coil, which when energized magnetically closes the main contacts and connects the batteries to the bus.

8-86. REMOVAL OF BATTERY CONNECTOR RELAY.

a. Remove all external power and lower the batteries.

b. Remove the main junction box cover.

c. Disconnect the wires from the relay terminals.

d. Remove the mounting hardware and the relay.

8-87. INSPECTION AND MAINTENANCE OF BATTERY CONNECTOR RELAY. The battery connector relay requires little or no maintenance between overhaul periods. In the event of circuit malfunction, correct the condition by following standard trouble shooting procedures. Do not lubricate any part of the relay.

8-88. TEST BEFORE INSTALLATION OF BATTERY CONNECTOR RELAY.

a. Stand the relay in a horizontal position and connect a variable 24-volt d-c power supply to the relay holding coil terminals.

b. Connect a 0 to 50 scale precision test voltmeter across the relay coil terminals.

c. Connect a continuity test light or ohmmeter across the relay main contacts.

d. Gradually increasing the power supply will close the main contacts at 18 volts or less, at room temperature.

e. Gradually reduce the power supply until the main contacts open. The voltage must not exceed 7 volts.

f. Reject the relay if either of the values in steps d or e cannot be obtained.

8-89. INSTALLATION OF BATTERY CONNECTOR RELAY.

a. Install the relay with the mounting hardware.

b. Connect all leads to the relay terminals as shown in the wiring diagram, Section XII.

c. Restore electrical power to the airplane, turn the master battery switch ON, and check for power to the main bus by momentarily turning on the flight compartment lights. Turn the switch OFF after completion of the test.

d. Install the main junction box cover.

8-90. MASTER BATTERY SWITCH. *(See figure 8-10.)*

8-91. One single-pole, single-throw master battery switch, installed on the pilot's center electrical panel, controls the power supply to the battery connector relay.

8-92. REMOVAL OF MASTER BATTERY SWITCH.

a. Disconnect the batteries and remove external power.

b. Dismount the center electrical panel.

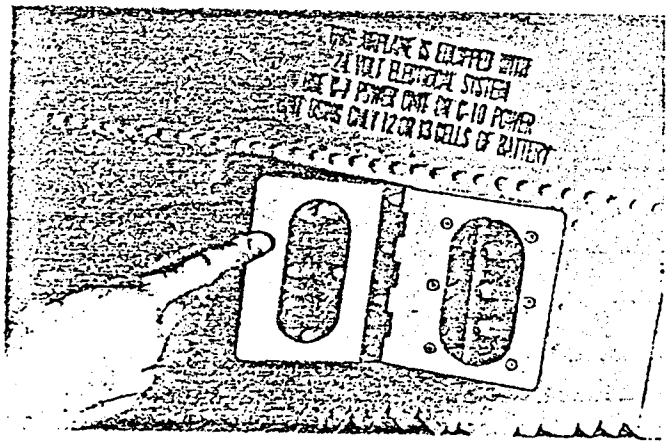

14,484

Figure 8-14. External Power Receptacle

c. Disconnect the wires from the master switch terminals.

d. Remove the two mounting screws, the switch, and the nameplate from the center electrical panel.

8-93. INSTALLATION OF MASTER BATTERY SWITCH.

a. Install the switch and nameplate with the two mounting screws on the center electrical panel.

b. Connect the wires to the switch terminals.

c. Install the center electrical panel.

d. Connect the batteries, turn the master battery switch ON, and check for power to the main bus by momentarily turning on the flight compartment lights. Turn the switch OFF after completion of the tests.

8-94. EXTERNAL POWER RECEPTACLE. *(See figure 8-14.)*

8-95. An external power receptacle is mounted on the underside of the fuselage aft of the radio compass loop antenna; external power is automatically connected to the d-c electrical system when the external power source connector is placed in the fuselage external power receptacle. Turn the master battery switch OFF before connecting an external power source.

8-96. REMOVAL OF EXTERNAL POWER RECEPTACLE.

a. Turn the master battery switch OFF.

b. Remove the mounting screws which secure the receptacle unit to the side of the receptacle box assembly.

c. Remove the receptacle from the assembly and disconnect all wiring.

8-97. INSTALLATION OF EXTERNAL POWER RECEPTACLE.

a. Connect all wiring as shown in the wiring diagram, Section XII.

b. Install the receptacle in the receptacle box assembly with the mounting hardware.

c. Connect an external power source and check for power supply at the main bus by operating any of the lighting circuits.

8-98. GENERATOR SYSTEM.

8-99. GENERAL DESCRIPTION. *(See figure 8-15.)* The generator system is the primary power source for all the electrical and electronic equipment. Two engine-driven generators are connected in parallel

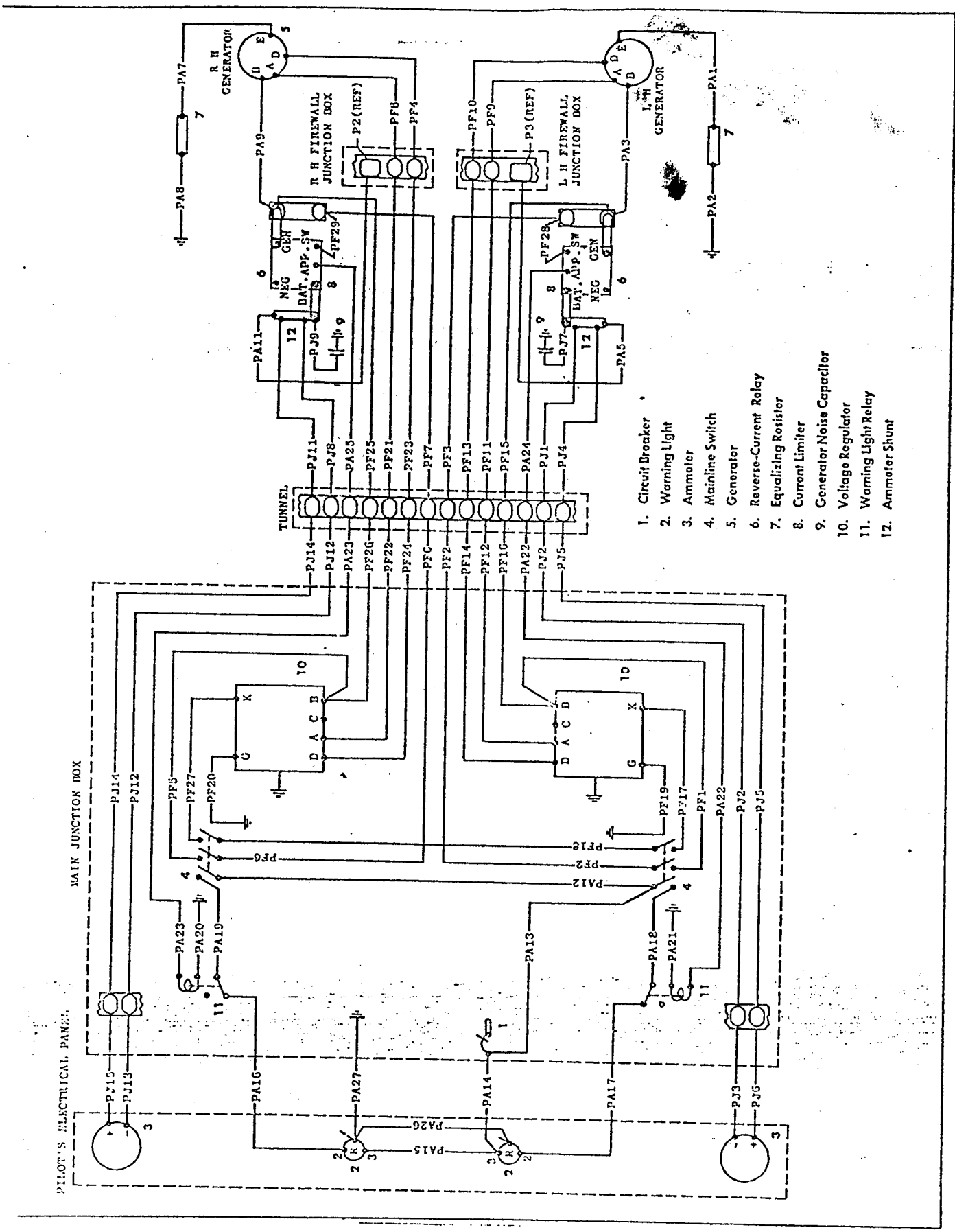

14,322

Figure 8-15. Generator System Schematic

through the reverse-current relays to the main bus. The reverse-current relay serves both as the generator connector relay, when the generator output is sufficient, and also as a protective device to prevent the generator from being motorized by the batteries. The generators are controlled by two voltage regulators which distribute the electrical load equally between the two generators. The generator system also contains one shunt resistor connected to the negative terminal of each generator, two ammeters, two ammeter shunt resistors, two warning lights, two current limiters, and two generator main line switches. On airplanes with bus priority system, the two 200-ampere, 28-volt generators are installed on the generator drive pads. These generators, with the voltage regulators, operate at the required capacity. The generator rotation is counterclockwise facing the shaft extension. The generator is connected in parallel with the generator on the other engine. The generator is air-cooled by a fan on the end of the shaft.

8-100. **OPERATIONAL CHECKOUT OF GENERATOR SYSTEM (ORIGINAL CONFIGURATION).** Perform an operational checkout of the generator system as described in the following steps.

a. Start both engines, preferably with an external power source. Remove external power before proceeding with any operational checks. Allow sufficient time for the voltage regulators to warm up and stabilize.

b. With both engines operating at approximately 1000 rpm, and the master battery switch ON, turn on enough electrical equipment, such as lights, radio, and the inverter, to produce a moderate electrical load.

c. Turn one generator main line switch ON and slowly advance the engine speed until the ammeter indicates that the reverse-current relay has closed. The engine speed should be 1200 to 1500 rpm.

d. Increase the engine speed to above 1800 rpm and observe the ammeter reading.

e. Decrease the engine speed to 1000 rpm, or lower, until the red generator warning light illuminates signifying that the reverse-current relay has opened. Before the red warning light illuminates, the ammeter reading will be one to two increments below zero.

f. Return the engine to 1000 rpm, turn the generator main line switch OFF, and repeat the checkout procedure for the other engine.

g. Advance both engines simultaneously to above 1800 rpm and turn both generator main line switches ON. The generators will share the indicated load within 15 percent of the total ammeter readings. If the indicated load is not within 15 per cent, adjust the generator system as described in paragraph 8-147. The indicated reading will be the sum of the separate readings taken in steps d and f.

8-101. **OPERATIONAL CHECKOUT OF PRIORITY BUS GENERATOR SYSTEM.** Perform an operational checkout of the priority bus generator system as described in the following steps.

a. Place the battery switch in the ON position.

b. Start both engines, warm them up, and operate them at normal cruising rpm.

c. Place the main generator switches in the ON position.

d. Apply a 300-ampere load by turning on the radio equipment, lights, etc.

e. Place the voltmeter selector switch in the L.H. GENERATOR position and observe the output of the left generator. By adjusting the voltage regulator, set the output of the generator to 28 volts. Repeat this procedure for the right generator. If the voltage is properly set, the main generators and the voltage regulators are operating satisfactorily.

f. Remove the load from the d-c power system. Be sure that all equipment switches are OFF.

g. Place the generator switches in the OFF position and reduce the engine speed to idle rpm.

h. Connect a jumper between terminals A and B on the voltage regulator for the left generator. Connect a portable precision voltmeter, with the positive lead to terminal B of the voltage regulator and the negative lead to ground.

i. Place the left generator switch in the ON position.

j. Increase left engine rpm gradually. Observe the precision voltmeter and the generator out light. The light should come on at 31 to 33 volts. Immediately after the light comes on the voltage should drop to approximately 2 volts. If these conditions exist, the overvoltage relay, generator out light, and the generator field control relay are operating satisfactorily. Repeat this procedure for the right engine generator.

8-102. **TROUBLE SHOOTING OF GENERATOR SYSTEM.** Trouble shooting procedures of the generator system are outlined in Table 8-7.

TABLE 8-7
TROUBLE SHOOTING - GENERATOR SYSTEM

TROUBLE	PROBABLE CAUSE	REMEDY
a. Generator operating at normal rpm, but output is intermittent.	Loose connection in wiring.	Tighten all loose connections.
	Faulty adjustment of reverse-current relay.	Replace relay, or adjust.

TABLE 8-7 (Continued)

TROUBLE	PROBABLE CAUSE	REMEDY
a. *(Continued)*	Faulty (unstable) voltage regulator.	Replace voltage regulator.
	System wiring open or shorted to ground.	Isolate and repair.
	Faulty generator (field lead broken or shorted; armature open or shorted).	Replace generator.
b. Generator operating at normal rpm, but no voltage is indicated.	Loose, dirty, or high-resistance connection or pins.	Isolate and repair.
	Brushes binding in holders.	Remove and clean brushes.
	Faulty generator (worn brushes, shorted or open armature).	Replace generator.
c. Generator operating at normal rpm, but low voltage is indicated.	Dirty or pitted voltage regulators contacts.	Clean contacts and increase spring tension.
	Loose, dirty, or high-resistance connection or pins.	Isolate and repair.
	Brushes binding in holders.	Remove and clean brushes.
	Faulty generator (worn brushes, shorted or open armature, or high-field resistance).	Replace generator.
	Generator operating on residual magnetism (system wiring in field circuit open).	Isolate and repair.
d. Generator operating at rated rpm, and voltage is high.	Short circuit between terminals A and B.	Isolate and repair.
	Faulty voltage regulator.	Replace voltage regulator.
e. Excessive arcing of brushes.	Brushes binding in holders.	Remove and clean brushes.
	Faulty generator (worn brushes, weak or broken brush springs, broken or loose brush holder, dirty or coated commutator).	Replace generator.
f. Generator throwing solder.	System wiring faulty.	Isolate and repair, then replace generator.
	Dirty commutator.	Clean commutator.
	Faulty generator (brushes defective, open or shorted armature).	Replace generator.
g. Generator will not stay paralleled.	Faulty voltage regulator.	Replace voltage regulator.
	Loose or dirty connection or pins, or open wiring.	Isolate and repair.

TABLE 8-7 (Continued)

TROUBLE	PROBABLE CAUSE	REMEDY
h. Generator not charging.	Reverse-current relay out of adjustment or faulty.	Adjust relay, or replace.
	One of previously cited causes.	Check system.

8-103. REMOVAL AND INSTALLATION OF COMPONENTS OF GENERATOR SYSTEM.

8-104. GENERATOR (ORIGINAL CONFIGURATION). One type 0-1, 100-ampere capacity generator is mounted on the accessory case of each engine, and turns at one and one-half times the engine crankshaft speed. Direction of rotation is counterclockwise facing the mounting pad on the engine. The generator is a compound wound, ram air cooled design. A blast tube, connected to a positioned generator cap, circulates cooling air through the generator case and out vent openings located in the generator base. A spring-drive coupling, located between the generator base. A spring-drive coupling, located between the generator spline drive shaft and the armature, reduces rotational shocks transmitted by the engine.

8-105. REMOVAL OF GENERATOR (ORIGINAL CONFIGURATION).

a. Untie and remove the canvas cover from the generator terminal block.

b. Disconnect and remove the generator cables from the terminal block.

c. Remove the generator blast tube.

d. Loosen the mounting nuts securing the generator to the engine.

e. Slide the generator out against the retaining nuts.

f. Remove the nuts, starting at the bottom location.

g. Remove the generator.

CAUTION

Support the generator during removal and *do not* allow the weight of the generator to rest on the drive shaft.

8-106. INSTALLATION OF GENERATOR (ORIGINAL CONFIGURATION).

a. Place the generator in position and install the retaining nuts.

b. Install the generator blast tube.

c. Connect the generator cables to the terminal block.

d. Install and tie the terminal block cover.

8-107. REMOVAL OF GENERATOR (AIRPLANES WITH BUS PRIORITY SYSTEM).

a. Disconnect the cables from the terminal housing.

b. Remove the mounting bolts securing the generator to the engine.

c. Remove the generator by sliding aft until the splined shaft clears the engine drive fitting.

8-108. INSTALLATION OF GENERATOR (AIRPLANES WITH BUS PRIORITY SYSTEM).

a. Clean the generator and engine mounting flange surfaces before installing the generator.

b. Check that the engine spline adapter sleeve matches the generator drive shaft spline.

c. Apply a coating of grease, Specification MIL-L-3545, or equivalent, to the generator drive shaft spline.

d. Install the gaskets and position the generator on the mounting studs. Install the nuts and tighten evenly to prevent distortion of the mounting flange.

e. Connect the wiring to the terminal block. Lock the two main terminal nuts and the two field terminal nuts with cotter pins.

CAUTION

Field terminal cotter pins pointing toward adjacent main terminals may short out, causing severe damage to the electrical system. If the cotter pin holes point toward adjacent main terminals, remove the nuts and washers from the field terminal studs. Push the studs inward until the square shoulders are disengaged from the terminal block recess. Rotate the studs 90 degrees. Install the nuts, washers, and cotter pins.

8-109. INSPECTION AND MAINTENANCE OF GENERATOR. If the commutator is rough, slightly burned, or glazed, smooth the surface using a No. 000 sandpaper while the generator is operating. Move the

sandpaper back and forth over the length of the commutator to avoid excessive sanding of any one portion. Cleaning to a bright surface is not necessary. A slight lubrication film, identified as bronze discoloration, is desirable for high generator loads and high altitude operation. When the cleaning has been completed, blow all dust from the generator with dry compressed air.

Note

If the commutator is very rough, disassemble the generator and turn the commutator unit down on a precision lathe.

8-110. REPLACEMENT OF GENERATOR BRUSHES. Replace the generator brushes when worn to within ⅛ inch from the top of the brush holder, or when the brush spring lever does not exert proper tension on the brush. Minimum allowable brush length is ½ inch based on a ⅞-inch length for a new brush.

a. Disconnect the brush leads from the terminals by removing the attaching screws.

b. Remove the spring and brush from the holder.

c. Insert a new brush into the holder and install the leads to the respective terminals with the attaching screws. Secure the locking tab by carefully squeezing it with pliers.

CAUTION

Do not secure the terminal screws too tight, as the brush assembly is of a soft metal composition and cracks very easily.

d. Mount the generator on a test stand.

e. If more than pinpoint arcing exists at the commutator under full load during the operational check, or if the generator puts out insufficient voltage, seat the brushes as follows:

f. Remove the brushes from the holders.

g. Wrap a piece of No. 000 sandpaper, cut to the width of the commutator, around the commutator with the grit-side up.

h. Install the brushes in the holders.

i. Turn the generator by hand through several revolutions in the direction of normal rotation.

j. Remove the sandpaper by pulling it out in the direction of normal rotation.

k. Blow out all dust from the generator with clean, dry, compressed air.

l. Test the generator under operating load conditions.

8-111. FLASHING GENERATOR FIELD. If the generator fails to build up voltage due to loss of residual magnetism, reversed polarity, or an excessively filmed commutator, flash the field as follows:

a. Turn the generator main line switch OFF, and the master battery switch ON.

b. Locate the point of battery power nearest to the voltage regulator using a voltmeter or "hot" test light.

c. Remove the voltage regulator from the affected generator circuit.

d. Connect one end of a suitable length of 18 gage or heavier wire to terminal A on the voltage regulator base.

e. Operate the engine at 1800 rpm and touch the opposite end of the test wire to the power source for not more than 1 second. Note the voltage indicated on a test precision voltmeter connected from terminal B of the regulator base to ground. If no voltage is indicated, the generator system wiring or the generator is faulty.

f. If voltage is indicated, install the voltage regulator and turn on the generator main line switch. If the generator does not maintain voltage, replace the voltage regulator. If the generator repeatedly fails to hold voltage on engine run-up, replace the generator.

CAUTION

Do not flash the generator field by manually closing the reverse-current relay, as serious damage will occur to the relay, generator, and wiring.

8-112. GENERATOR VOLTAGE REGULATOR. *(See figure 8-16.)* One type 1042 voltage regulator for each generator is mounted in the main junction box. The voltage regulator, through variation of pressure on the carbon pile, controls the generator voltage by varying the resistance in the field circuit. Ventilation for the voltage regulator is provided by a tube leading from the top outboard side of the main junction box to a half-section venturi secured to the left side of the forward fuselage. The airstream entering the venturi creates a low pressure in the tube which draws fresh air from the bottom of the junction box. Each regulator is mounted on a shock mounted base, and connects to the terminals of the base by spring contacts.

8-113. REMOVAL OF GENERATOR VOLTAGE REGULATOR.

a. Turn the generator switches OFF if the engine is running.

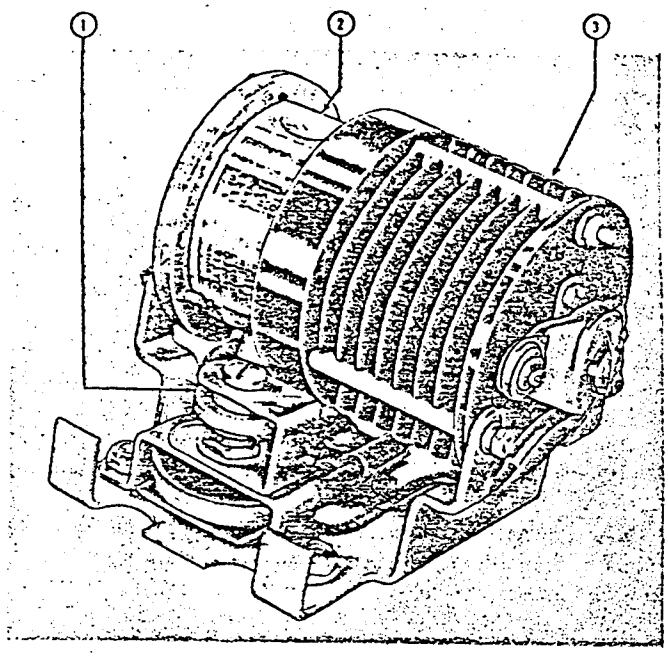

33,165

Figure 8-16. Carbon Pile Voltage Regulator

Key to Figure 8-16	
Item	*Nomenclature*
1.	Adjusting Knob
2.	Solenoid Case
3.	Carbon Pile Housing

b. Remove the main junction box cover.

c. Unsnap the spring retaining clips and raise the regulator.

d. Move the regulator forward to disengage the retaining tabs from the rear of the regulator mounting base.

CAUTION

The voltage regulator is a precision instrument easily damaged by rough handling. Only qualified personnel will make any adjustments to the regulators.

e. To remove the regulator base, first disconnect all wiring from the terminals.

f. To gain access to the shock mount retaining nuts, remove the mounting screws and then the regulator support structure.

g. Remove the regulator base shock mount retaining nuts, lockwashers, and washers.

h. Remove the regulator base.

8-114. INSPECTION AND MAINTENANCE OF GENERATOR VOLTAGE REGULATOR. Clean any dirt, corrosion, or pits from the voltage regulator contacts. Replace any rubber shock mount which shows deterioration or damage. Check all components and wiring for damage and security. Do not lubricate any part of the voltage regulator or regulator base.

8-115. INSTALLATION OF GENERATOR VOLTAGE REGULATOR.

a. Position the regulator base and install the shock mount attaching washers, lockwashers, and nuts.

b. Position the regulator support assembly and secure with the mounting hardware.

c. Connect all wiring to the terminals of the regulator base as shown in the wiring diagrams, Section XII.

d. Slide the retaining tabs on the regulator mount into the slots located at the rear of the regulator base.

e. Press the regulator against the contacts of the base until the spring retaining clips lock the regulator in position.

f. Install the main junction box cover.

g. Perform a functional test of the generator system.

8-116. GENERATOR REVERSE-CURRENT RELAY. *(See figures 8-17 through 8-19.)* In most airplanes, a generator reverse-current relay is installed in the outboard side of each main landing gear wheel well just aft of the firewall. The relay serves as a generator connector relay and also as a protective device to prevent the battery from motorizing the generator. The relay consists primarily of a main contactor relay equipped with heavy points which open and close the main bus power feed, and a polarized pilot relay which opens the generator circuit when the generator builds up reversed polarity or when the current flows into the generator. The contactor coil is connected in series with the pilot relay, which in turn is connected in series with the generator switch; therefore, the main contacts cannot close until the generator switch is ON and the pilot relay is closed.

8-117. A potential coil in the pilot relay exerts a torque on the balanced armature of a polarized coil in the pilot relay. When the generator voltage is below 26.0 to 27.0 volts, the torque is not sufficient to move the armature, and the relay points remain open. When the generator voltage builds up sufficiently, the increased torque moves the armature which closes the relay points, and in turn energizes the main relay coil and the main contacts.

8-118. When the generator is connected to the bus, the load current flows through the heavy polarized coil of the pilot relay. This coil is so designed that,

if the generator is delivering power, the magnetic effect of the load current adds to the potential of the pilot relay coil and adds to the torque holding the pilot relay armature closed. When the generator voltage falls below the system voltage, the current flow reverses and feeds back into the generator. This reverse-current flow reverses the polarity of the polarized coil. Thus, when the reverse-current flow is sufficient, the magnetic effect of the polarized coil cancels the torque of the pilot relay coil, thereby releasing the armature and opens the pilot relay points. When the pilot relay opens, the main contacts open, removing the generator from the bus. For most relays, a reverse-current flow of 8 to 25 amperes is required to open the pilot relay.

8-119. REMOVAL OF GENERATOR REVERSE-CURRENT RELAY.

a. Turn the master battery switch OFF, and remove the external power.

CAUTION

As a safety precaution, lower the batteries, and placard the external power receptacle as inoperative.

b. Disconnect the wiring. If the wiring identification numbers are obliterated, identify each wire as it is removed with a piece of masking tape marked with the terminal designation.

c. Remove the mounting hardware and the relay.

8-120. INSTALLATION OF GENERATOR REVERSE-CURRENT RELAY.

a. Install the relay with the mounting hardware.

b. Connect all wiring as shown in the wiring diagram, Section XII.

c. Restore electrical power to the airplane, and conduct a functional test of the generator system.

d. If the generator system is inoperative, flash the generator field.

8-121. FUNCTIONAL TEST AND ADJUSTMENT OF GENERATOR REVERSE-CURRENT RELAY.

a. Turn the generator main line switches OFF.

b. Start and warm up the engines until the voltage regulators stabilize.

c. Connect the negative terminal of a precision test voltmeter to ground, and the positive to terminal B on the voltage regulator base of the generator system to be checked.

d. Check the generator voltage and adjust if necessary.

e. Turn the generator main line switch ON for the system to be tested.

f. Increase the engine speed slowly and, when the relay closes, the voltmeter will indicate a slight drop in voltage. The voltage, just before the relay closes, should be 26.0 to 27.0 volts. If the voltage is not within these values, adjust the relay as described in the following paragraphs.

WARNING

Do not manually close the reverse-current relay, as otherwise injury to personnel and damage to the relay can occur.

8-122. ADJUSTMENT OF REVERSE-CURRENT RELAY CUT-IN. The cut-in voltage of most relays can be adjusted while the relay is installed in the airplane. Remove and replace all hermetically sealed relays, such as the Type A-700 relay.

8-123. GENERAL ELECTRIC REVERSE-CURRENT RELAY. *(See figure 8-17.)* Adjust the General Electric 3GTR72C1 or C1A reverse-current relay by turning the small screw in the spring clip located directly in line with a hole in the relay shield.

8-124. LEECE-NEVILLE REVERSE-CURRENT RELAY. *(See figure 8-18.)* Adjust the Leece-Neville No. 24552 or No. 24565 reverse-current relay by turning the small slotted knurled nut located near the generator cable terminal. This nut controls the tension on the pilot relay spring and turning the nut counterclockwise increases the spring tension to raise the cut-in voltage.

8-125 WESTINGHOUSE REVERSE-CURRENT RELAY. *(See figure 8-19.)* Adjust the Westinghouse 1240224A (Type AVR-14A or B) reverse-current relay by turning a small screw, provided as a stop for the pilot relay armature; to raise the cut-in voltage, turn the screw counterclockwise.

8-126. FUNCTIONAL TEST OF REVERSE-CURRENT RELAY CUT-IN VOLTAGE. With the engines running and the generator main line switches OFF, perform the following check:

a. Check each generator voltage with a precision test voltmeter. Adjust the voltage if necessary.

b. Turn the generator main line switch ON for one generator.

c. Increase the speed of the appropriate engine until the ammeter indicates output from the generator.

d. Reduce the engine speed slowly and watch the ammeter. The reading will decrease below zero until it reaches the point where the relay opens which will be from —8 to —25 amperes.

Note

Some types of ammeters do not include a negative scale. The reading of the reverse-current flow on this type of ammeter must be interpolated in percentage of pointer travel.

e. Replace the relay if the ammeter does not return to zero, or if the cut-out value is not within the following limits.

General Electric: —8 to —20 amperes.
Leece-Neville: —10 to —20 amperes.
Westinghouse: —18 to —25 amperes.

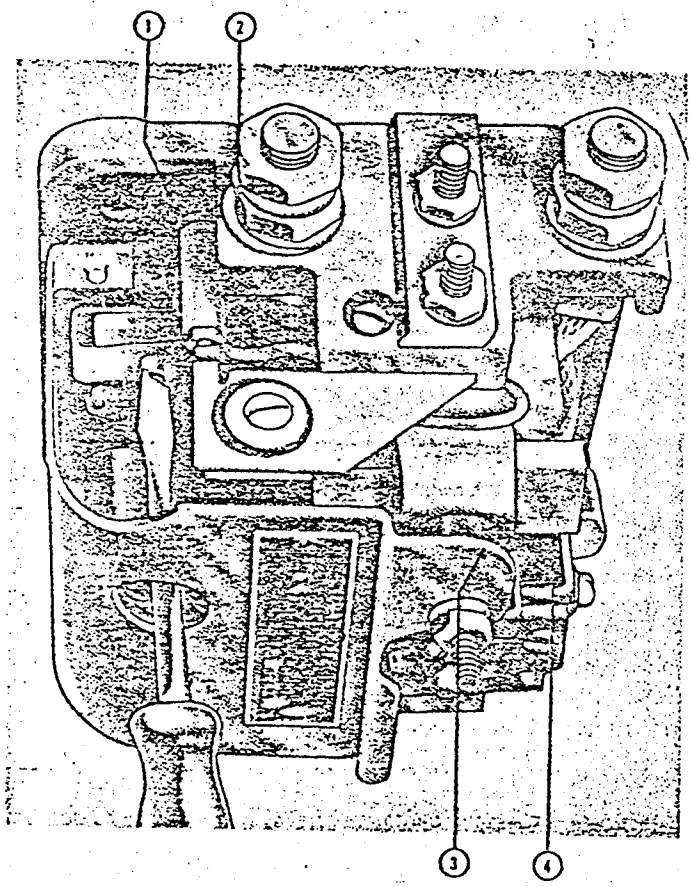

33,166

Figure 8-17. General Electric Reverse-Current Relay

Key to Figure 8-17	
Item	*Nomenclature*
1.	Main Contactor
2.	Spring Adjustment Screw
3.	Armature Stop Adjustment Nut
4.	Reverse-Current Adjustment Screw

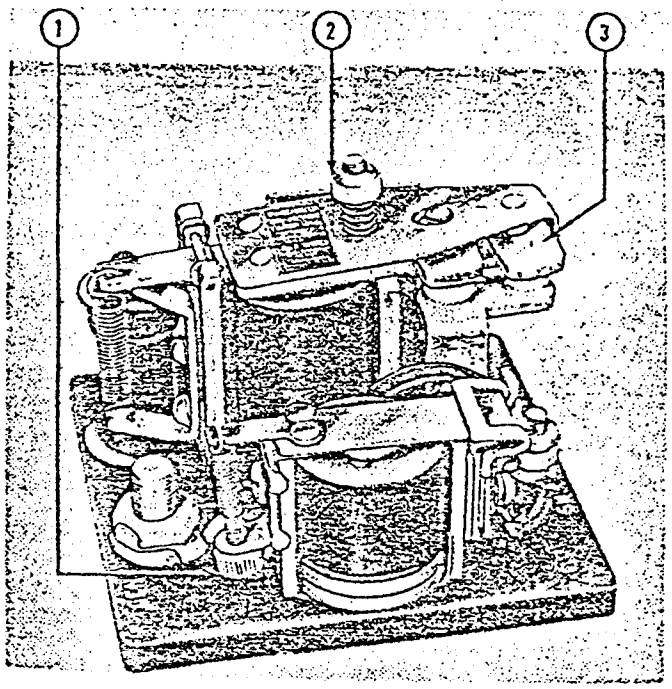

33,167

Figure 8-18. Leece-Neville Reverse-Current Relay

Key to Figure 8-18	
Item	*Nomenclature*
1.	Voltage Adjustment Screw
2.	Reverse-Current Adjustment Nut
3.	Main Contactor Contacts

8-127. REVERSE-CURRENT RELAY (AIRPLANES WITH BUS PRIORITY SYSTEM). On airplanes with bus priority system, two 200-ampere, reverse-current relays are installed in the power systems junction box, one for each main generator. Each reverse-current relay contains a voltage relay, a differential relay, and a contactor. The combination of relays automatically connects and disconnects the generator and the bus.

8-128. REMOVAL OF REVERSE-CURRENT RELAY (AIRPLANES WITH BUS PRIORITY SYSTEM).

a. With the generator main line and battery switches OFF, disconnect the wires from the terminals on the relay.

b. Remove the screws from the relay base and remove the relay.

8-129. INSTALLATION OF REVERSE-CURRENT RELAY (AIRPLANES WITH BUS PRIORITY SYSTEM).

a. Place the relay in position and tighten the screws.

b. Connect the wires to the terminals on the relay.

8-130. ADJUSTMENT OF REVERSE-CURRENT RELAY (AIRPLANES WITH BUS PRIORITY SYSTEM). After adjusting the voltage regulators, adjust the reverse-current relay as described in paragraph 8-121.

8-131. OVERVOLTAGE RELAYS. The overvoltage relays are installed in the generator equipment control panel. The relays function to disconnect the generator from the bus when the output voltage from the generator becomes abnormally high. The reset mechanism of the relays is operated by pushing in the reset button located on top of the relays.

8-132. REMOVAL OF OVERVOLTAGE RELAY.

a. Disconnect the electrical leads.

b. Remove the attaching screws and remove the relay.

8-133. INSTALLATION OF OVERVOLTAGE RELAY.

a. Position the relay and install the attaching screws.

b. Connect the electrical leads.

Note

When the type RYU-1/A relay is used as a replacement item on airplanes that have more than one overvoltage relay, all other overvoltage relays must be replaced with type RYU-1/A.

8-134. GENERATOR AMMETER.
(See figure 8-10.)

a. Two type F-1 ammeters, installed on the pilot's right electrical panel, measure the voltage drop across the ammeter shunt resistor and converts the measurement into a reading of amperage flow from the generator.

8-135. REMOVAL OF GENERATOR AMMETER.

a. Turn the master battery switch OFF and remove external power.

b. Dismount the pilot's right electrical panel.

c. Disconnect the wiring from the ammeter terminals.

d. Remove the mounting screws and instrument from the panel.

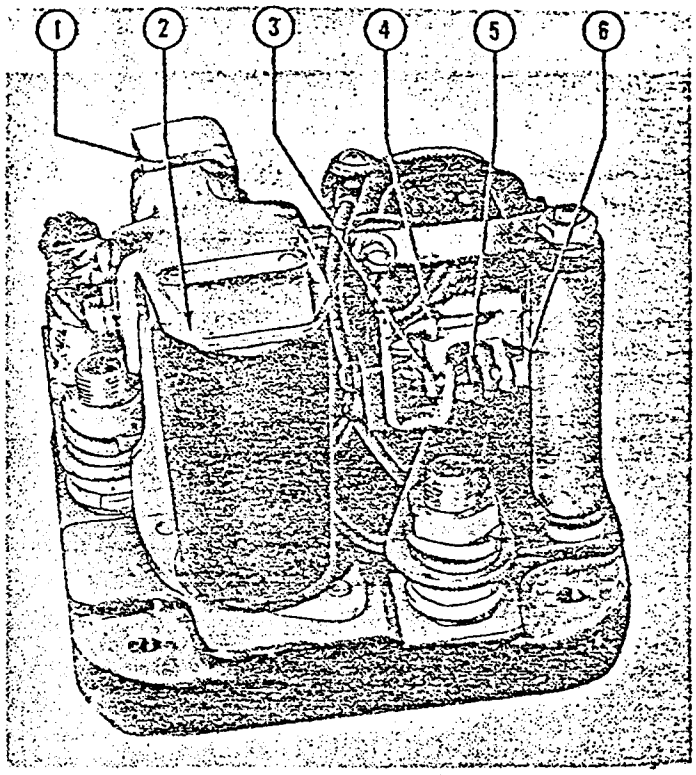

33,16B

Figure 8-19. Westinghouse Reverse-Current Relay

Key to Figure 8-19

Item	*Nomenclature*
1.	Main Contactor Contacts
2.	Magnetic Contactor
3.	Contact Screw
4.	Armature Spring Adjusting Screw
5.	Relay Contacts
6.	Stop Screw

8-136. INSTALLATION OF GENERATOR AMMETER.

a. Mount the ammeter in the pilot's right electrical panel with the attaching hardware.

b. Connect the wiring to the instrument terminals as shown in the wiring diagram, Section XII.

c. Secure the pilot's right electrical panel, and check the ammeter operation.

8-137. ADJUSTMENT OF GENERATOR AMMETER. With no current in the ammeter circuit, zero

the ammeter (which is the only field adjustment possible) by turning the zero corrector screw, located on the front of the instrument, and tapping the bezel glass lightly until the pointer is positioned at zero.

8-138. GENERATOR EQUALIZING RESISTOR. *(See figure 8-7.)*

a. An equalizing resistor is installed in each main landing gear wheel well on the aft side of the firewall. The resistor is connected in the negative circuit of the generator and used for equalizing loads between the paralleled generators. The resistor is designed so that the voltage drop across it is directly proportional to the load current carried by that generator, and is equal to a 0.5-volt drop at rated generator current. When there is an unequal division of load between generators, the voltage drops in the equalizing resistors will be unequal, and currents proportional to the difference in load will flow through the equalizer coils of the voltage regulators. The current in the equalizer circuit flows in such a direction that the equalizing coil force adds to that of the potential coil for the generator carrying the highest load, thereby decreasing the output voltage and current for that generator. The effect is opposite for the generator carrying the smaller load.

8-139. GENERATOR CURRENT LIMITERS.

a. The current limiters, one installed in each firewall junction box on some airplanes, are connected between the reverse-current relay and the main bus. The limiter is a copper fusible link installed to protect the generator circuit. In case of an electrical fault, such as a short circuit in the generator, relay or wiring, the current limiter opens when heavy reverse-current flows from the bus and disconnects the faulty circuit from the distribution system. Because of the high melting point of the limiter, the effect of temperature and normal heavy current flow is negligible.

8-140. GENERATOR NOISE CAPACITOR. *(See figure 8-7.)* A type CA275X capacitor is mounted on each firewall junction box and is connected across each generator output to dampen radio interference.

8-141. GENERATOR MAIN LINE SWITCH. *(See figure 8-6.)* Two generator main line switches are mounted on the circuit breaker panel in the main junction box. The line switch connects the generator to the main bus by allowing the reverse-current relay to close when the generator has built up sufficient voltage.

8-142. REMOVAL OF GENERATOR MAIN LINE SWITCH.

a. Disconnect the batteries and remove external power.

b. Remove the main junction box cover.

c. Remove the four self-locking nuts securing the circuit breaker panel.

d. Dismount the circuit breaker panel.

e. Disconnect the wiring from the switch terminals.

f. Remove the mounting screws and the switch.

8-143. INSTALLATION OF GENERATOR MAIN LINE SWITCH.

a. Install the switch with the two mounting screws.

b. Connect the wiring to the terminals as shown in the wiring diagram, Section XII.

c. Secure the circuit breaker panel with the four nuts and the correct number of washers.

d. Install the junction box cover.

e. Restore electrical power to the airplane and conduct a functional test of the generator system.

8-144. FUNCTIONAL TEST AND ADJUSTMENT OF GENERATOR SYSTEM.

8-145. FUNCTIONAL TEST OF GENERATOR SYSTEM.

a. Start both engines, preferably with external power. Remove the external power before performing any tests or adjustments.

b. Operate the engines 15 to 20 minutes at approximately 1200 rpm to allow the voltage regulators to stabilize.

Note

Due to inadequate engine cooling during ground operation, the warm-up of equipment is governed by the limitations of the engines. If adequate warm-up time is not possible,

make the final system adjustments in flight as described in paragraph 8-148.

c. Connect the positive lead of a precision test voltmeter to terminal B on the voltage regulator base, and the negative lead to ground.

d. With both engines operating at 1000 rpm and the master battery switch ON, turn on enough electrical equipment (such as lights, radio, and inverter) to produce a moderate load.

e. Slowly advance one engine to check the generator cut-in voltage, which is the point at which the reverse-current relay will close. A sharp drop in the voltmeter reading will be noticed at 26.5 volts to indicate cut-in.

f. Increase the engine speed to above 1800 rpm. The voltage will stabilize at about 28.0 volts, and the ammeter will indicate a moderate load.

g. Return the engine to 1000 rpm and repeat the check procedure for the other generator.

h. Advance both engines simultaneously to 1800 rpm. The generators must share the electrical load within 15 per cent of the total ammeter readings. If the indicated load is not within 15 per cent, adjust the generator system as described in paragraphs 8-146. and 8-147.

8-146. ADJUSTMENT OF GENERATOR SYSTEM VOLTAGE.

a. With the engines operating at 1000 rpm and the master battery switch ON, connect a precision test voltmeter as described in paragraph 8-145, step c.

b. Turn both generator main line switches OFF.

c. Increase the speed of the appropriate engine to 800 rpm.

d. The voltmeter must stabilize at 28.0 volts. If not, turn the knurled knob on the voltage regulator clockwise to raise the voltage to indicate 28.0 volts.

Note

Where average ambient temperatures are high and considerable boiling of the battery electrolyte causes frequent addition of water, the generator voltage can be set as low as 27.25 volts.

e. After the voltage has been adjusted, reduce the engine speed to 1000 rpm.

f. Repeat the check procedure for the other generator.

8-147. PARALLELING ADJUSTMENT OF GENERATOR SYSTEM.

a. Upon completion of the voltage adjustment, increase both engines to 1800 rpm.

b. Turn the generator main line switches ON.

c. Apply as heavy an electrical load of airplane equipment as possible (preferably 100 amperes).

d. Observe the ammeters and note the difference between them must not exceed 10 amperes (one gradation).

e. If the load is not shared properly, lower the voltage slightly on the highest generator and raise the voltage of the lowest generator an equal amount by turning the knurled adjusting knobs on the voltage regulators. Do not change the voltage to any great extent during adjustment.

Note

Only qualified personnel such as a pilot, flight engineer, or electrician may make these adjustments.

f. Upon completion of all adjustments, check the bus voltage on the precision test voltmeter which must be 28.0 to 27.25 (±0.25) volts. If the voltage is not within these limits, readjust both voltage regulators and then again check the generator paralleling.

Note

Always remove the system load before reducing engine rpm or removing the generators from the power distribution system. Make a final check of the bus voltage and paralleling after the generators and regulators have been operating for approximately ½ hour. The regulators must be thoroughly warm to obtain an accurate voltage reading.

8-148. IN-FLIGHT PARALLELING ADJUSTMENT OF GENERATOR SYSTEM.

During the first flight following a ground adjustment of the generator system, observe the ammeters for unequal load division.

a. If the normal load is divided unequally, apply a heavy load of electrical equipment and note the difference between the two ammeters which must not exceed 20 amperes (two gradations).

b. If the load equalization is incorrect, slightly lower the voltage of the highest generator and raise the voltage of the lowest generator an equal amount, until the load equalization is within limits.

c. Upon completion of the adjustments, make a final check of the bus voltage, with the precision test voltmeter, which must be 28.0 (±0.40) to 27.25

(+0.40, —0.25) volts, depending on the original voltage. If the bus voltage is not within these limits, again adjust the generator system.

8-149. A-C POWER SYSTEM.

8-150. **GENERAL DESCRIPTION.** In the original configuration one inverter supplies 110-volt, 400-cycle, single-phase a-c power to the electronic equipment through the distribution busses located in the radio junction box. A switch, mounted on the pilot's center electrical panel, controls a relay in the inverter. The relay regulates the 28-volt d-c input to the inverter. A 5-ampere circuit breaker for the control circuit and a 50-ampere circuit breaker for the main power feed are mounted on the circuit breaker panel in the main junction box. The inverter is installed on the floor below the radio operator's table.

8-151. On airplanes with the bus priority system, two main and one spare inverters are installed in the a-c power system supply single-phase a-c current. The two main inverters and the respective circuit breakers are located in the lavatory compartment. The spare inverter is located beneath the radio operator's seat. The circuit breaker for the spare inverter is mounted on the inboard side of the power systems junction box. All inverters are controlled by switches mounted on the power systems junction box control panel. A frequency meter and a voltmeter on the power systems junction box control panel indicate the values of frequency between 350 and 450 cycles, and voltage from 0 to 150 volts ac. Two inverter failure warning lights are located on the right overhead electrical control panel.

8-152. OPERATIONAL CHECKOUT OF A-C POWER SYSTEM.

a. Turn the master battery switch ON.

b. Turn the inverter switch ON.

c. Turn on the equipment receiving power from the inverter (such as the radio compass and the flux gate compass) and after sufficient warm-up time, check the equipment for proper operation.

d. If the equipment operates normally, signifying correct values of the power supply, turn the equipment OFF.

e. Turn inverter and battery switches OFF.

TABLE 8-8
TROUBLE SHOOTING - A-C POWER SYSTEM

TROUBLE	PROBABLE CAUSE	REMEDY
a. Inverter will not run.	Faulty power source; tripped or faulty circuit breaker.	After checking for faulty system, reset circuit breaker.
	Faulty inverter.	Replace inverter.
	Faulty wiring.	Isolate and repair.
b. High inverter input current.	Shorted inverter armature.	Replace inverter.
c. Burned spots on inverter commutator.	Open or shorted armature.	Replace inverter.
	Faulty brushes.	Replace brushes, or replace inverter.
d. High inverter speed.	Open in field coils.	Replace inverter.
e. Noisy inverter.	Defective bearings.	Replace inverter.
f. Excessive sparking at commutator.	Defective brushes.	Replace brushes, or replace inverter.
g. Inverter rpm unstable (wows).	Defective control circuit in inverter.	Replace inverter.

8-153. **TROUBLE SHOOTING OF A-C POWER SYSTEM.** The trouble shooting procedures for the a-c power system are outlined in table 8-8.

8-154. REMOVAL AND INSTALLATION OF COMPONENTS OF A-C POWER SYSTEM.

8-155. A-C POWER SYSTEM INVERTER (ORIGINAL CONFIGURATION).

8-156. One 750-volt-ampere, 400-cycle, single-phase inverter is bolted to either a mounting plate or two brackets on the floor in the radio operator's compartment. Twenty-eight-volt d-c, supplied through brushes at the commutator end, drives the a-c winding armature (mounted on the same shaft with the motor armature) to develop 115-volt a-c power to the bus through brushes contacting two slip rings. A relay, actuated by power from the remote switch, controls both d-c input and a-c output. The inverter is cooled by a fan attached to the motor shaft which exhausts air through the perforated end covers.

8-157. REMOVAL OF A-C POWER SYSTEM INVERTER (ORIGINAL CONFIGURATION).

a. Open the inverter circuit breakers.

b. Remove the terminal cover from the inverter.

c. Disconnect the wiring from the terminals.

d. Disconnect the bonding strap.

e. Remove the four inverter mounting bolts.

f. Remove the inverter.

8-158. INSTALLATION OF A-C POWER SYSTEM INVERTER (ORIGINAL CONFIGURATION).

a. Position the inverter and install the four mounting bolts.

b. Connect the bonding strap.

c. Connect the wiring to the inverter terminals as shown in the wiring diagram, Section XII.

d. Install the terminal cover on the inverter.

e. Close both circuit breakers, turn the master battery switch ON, and perform a functional test of the inverter.

8-159. REMOVAL OF A-C POWER SYSTEM INVERTER (AIRPLANES WITH BUS PRIORITY SYSTEM).

a. Disconnect the wires from the terminals.

b. Remove the four bolts securing the inverter to the mounting plate or bracket.

c. Remove the inverter.

8-160. INSTALLATION OF A-C POWER SYSTEM INVERTER (AIRPLANES WITH BUS PRIORITY SYSTEM).

a. Position the inverter on the mounting plate or brackets and install the four attaching bolts.

b. Connect the wires to the terminals.

8-161. REPLACEMENT OF A-C POWER SYSTEM INVERTER BRUSHES. Periodically inspect the inverter brushes and, if they are worn to less than ½ inch in length, or if they are broken, chipped, or sticking, replace them as follows:

a. With the inverter unmounted, remove the end cover.

b. Remove the retaining spring and the brush from the brush holder.

c. Disconnect and remove the old brush.

d. Connect and install the new brush.

Note

The brush springs must be centrally located on top of the brushes to insure full brush contact with the commutator. In an emergency, the brushes can be replaced and then be reseated by allowing them to wear in by commutator rotation.

e. Operate the inverter and check the commutator for arcing. If more than pinpoint arcing exists, remove the brushes and wrap No. 000 sandpaper, grit side up, around the commutator.

f. Install the new brushes and manually turn the armature through several revolutions, until the brushes are fully seated.

g. Remove the sandpaper and install the brushes.

h. Run the inverter until the brushes are glazed.

i. Install the end cover and secure it.

8-162. FUNCTIONAL TEST AND ADJUSTMENT OF A-C POWER SYSTEM (ORIGINAL CONFIGURATION).

a. Connect external power to the airplane. If external power is not available, turn the master battery switch ON.

b. Connect a precision test a-c voltmeter across the negative terminal and the AC OUTPUT terminal, and a frequency test meter across the same terminals.

c. Turn the inverter switch ON.

d. Turn the radio compass, flux gate compass, and the IFF equipment ON.

WARNING

Open the IFF DESTRUCT circuit breaker in the main junction box to prevent accidental destruction of the equipment.

e. The voltmeter must read 110 to 120 volts a-c and if the output voltage is not within limits, correct it by turning the voltage adjusting screw with a screwdriver.

f. The frequency test meter must read 390 to 410 cps. and, if the output frequency is not within limits, correct it by adjusting the voltage.

g. Replace the inverter if both the voltage and frequency cannot be adjusted to within the given tolerances.

h. Turn all equipment OFF, remove external power, and all test equipment.

8-163. FUNCTIONAL TEST AND ADJUSTMENT OF A-C POWER SYSTEM (AIRPLANES WITH BUS PRIORITY SYSTEM).

a. Check that all inverter switches and control circuit breakers are OFF.

b. Connect the external power supply and energize the d-c system.

c. Close the inverter control circuit breakers.

d. Turn the No. 1 main inverter switch to the ON position.

e. Place the inverter meter switch in the No. 1 position. The a-c voltmeter should indicate between 110 and 115 volts, and the frequency meter should indicate between 390 and 410 cycles.

f. Place the No. 2 main inverter switch in the ON position.

g. Place the inverter meter selector in the No. 2 position and observe the voltmeter and the frequency meter for the same values as in step e.

h. Place the No. 1 main inverter switch in the SPARE ON position and the spare inverter switch to ON (No. 1 bus position). The No. 1 main inverter failure warning light and the SPARE ON No. 1 bus light should come on.

i. Place the No. 2 main inverter switch in the SPARE ON position and the spare inverter switch in the No. 2 BUS position. The No. 2 main inverter failure warning light and the SPARE ON No. 2 bus light should come on.

j. Place the No. 1 main inverter switch in the SPARE ON position, the spare inverter switch in the No. 1 BUS position, and the inverter meter selector switch to SPARE. The a-c voltmeter should indicate between 110 and 115 volts, and the frequency meter should indicate between 390 and 410 cycles.

k. Place the No. 2 main inverter switch in the SPARE ON position, the spare inverter switch in the No. 2 BUS position, and the inverter meter selector switch to SPARE. Observe the voltmeter and frequency meter for the same values as in step j.

l. Place the inverter meter selector switch in the No. 1 position.

m. Turn OFF all switches and open all control circuit breakers.

n. Disconnect the external power supply.

8-164. ADJUSTMENT OF A-C POWER SYSTEM INVERTERS (AIRPLANES WITH BUS PRIORITY SYSTEM).

Limited voltage and frequency adjustments may be made of any of the three inverters. To adjust voltage, insert a screwdriver through the hole in the control box, turning the voltage adjustment screw. When making a frequency adjustment, remove the cap from the end of the inverter to gain access to the adjusting screw. If the adjustments do not bring the output voltage and frequency to within specified limits, replace the inverter. The specified limits are 390 and 410 cycles per second, and 112.5 to 117.5 volts.

Note

Make voltage and frequency adjustments under no-load condition. Output voltage adjustment can be made without affecting the frequency, but frequency adjustment may change the output voltage.

a. Connect the external power supply and energize the d-c system.

b. Close the inverter system control circuit breakers.

c. Place the inverter switch in the ON position and allow the inverter to warm up for 15 minutes.

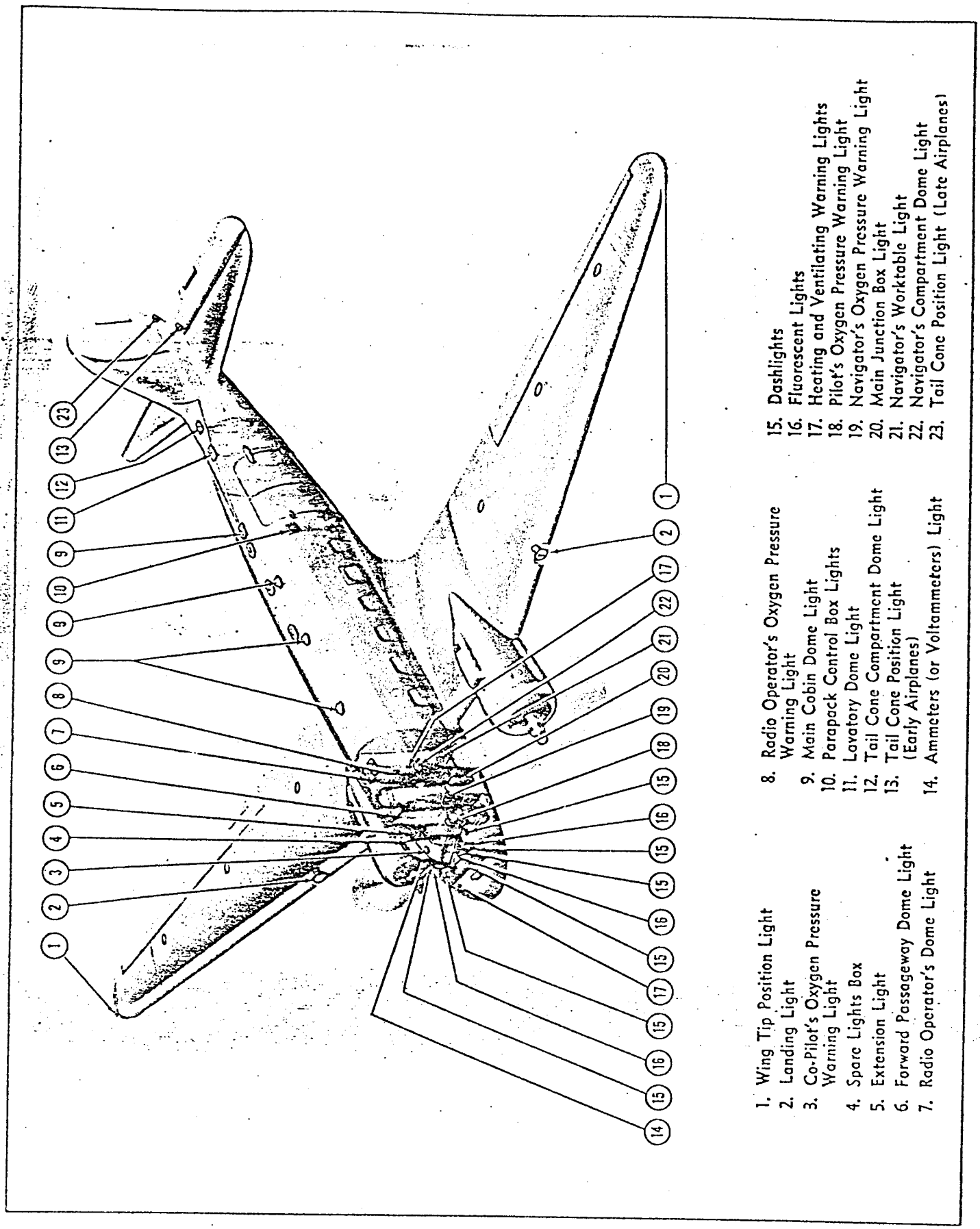

Figure 8-20. Lighting Locations (C-47 Airplanes)

33,169

d. Release the locking devices of the voltage and frequency adjustments.

e. Turn the frequency adjustment until the a-c frequency meter indicates as near to 400 cycles per second as possible.

f. Turn the voltage adjustment until the voltmeter indicates as near to 115 volts as possible.

g. Reset the locking devices on the voltage and frequency adjustments.

h. Operate the inverter under partial load to full load conditions. Frequency should remain between 390 and 410 cycles per second; voltage between 112.5 and 117.5 volts.

i. Remove the load and place the inverter switch in the OFF position.

j. Disconnect the external power supply and de-energize the d-c system.

k. Open all control circuit breakers and switches.

8-165. LIGHTING SYSTEMS.

8-166. GENERAL DESCRIPTION. *(See figures 8-20 and 8-21.)* The lighting systems adapt the airplane to night operation and maintenance. The navigation lights outline the extreme points of the airplane while indicating relative position and course. The landing lights illuminate the landing or taxi path for short durations. The interior lighting provides illumination for the flight crew, passengers, and for the ground technical team. All the systems, except the main power feed for the landing lights, receive power through circuit breakers located in the main junction box, which is illuminated by an internal light, when the junction box door is opened. This light is connected to the battery side of the battery connector relay. A box assembly containing spare light bulbs for in-flight use is mounted outboard and above the co-pilot's seat aft of the sliding window. Tables 8-10 and 8-11 (following paragraph 8-220) identify the replacement bulbs required for all light assemblies.

TABLE 8-9

TROUBLE SHOOTING - LIGHTING SYSTEMS

TROUBLE	PROBABLE CAUSE	REMEDY
a. Switch ON; interior lights do not illuminate.	Circuit breaker open.	Close circuit breaker.
	Rheostat turned OFF.	Turn rheostat ON.
	Faulty rheostat.	Replace rheostat.
	Faulty wiring.	Isolate and repair.
b. Switch ON; some lights do not illuminate.	Inoperative lights are defective.	Replace light bulbs.
	Lights installed incorrectly.	Reinstall lights.
	Defective wiring.	Isolate and repair.
c. Navigation lights flasher does not operate.	Circuit breaker open.	Close circuit breaker.
	Defective flasher.	Replace flasher.
d. Navigation lights flicker.	Burned contact in flasher.	Replace flasher.
	Loose connection in circuit.	Isolate and repair.
e. Navigation lights flash irregularly.	Incorrect adjustment of flasher contacts.	Replace flasher.
f. With control switch ON, anticollision light does not operate.	Circuit breaker open.	Close circuit breaker.
	Defective light assembly.	Check for power at light and replace defective light assembly.
g. With control switch ON, anticollision light does not illuminate, though motor runs.	Defective or burned out lamp.	Check for power at lamp and replace defective lamp.

Refer to Section XII for the lighting systems wiring diagrams.

8-167. **OPERATIONAL CHECKOUT OF LIGHTING SYSTEMS.** For operational checkout procedures, refer to the particular lighting system described in the following paragraphs.

8-168. **TROUBLE SHOOTING OF LIGHTING SYSTEMS.** Trouble shooting of the lighting systems is accomplished as outlined in table 8-9. (See paragraph 8-23 for methods.)

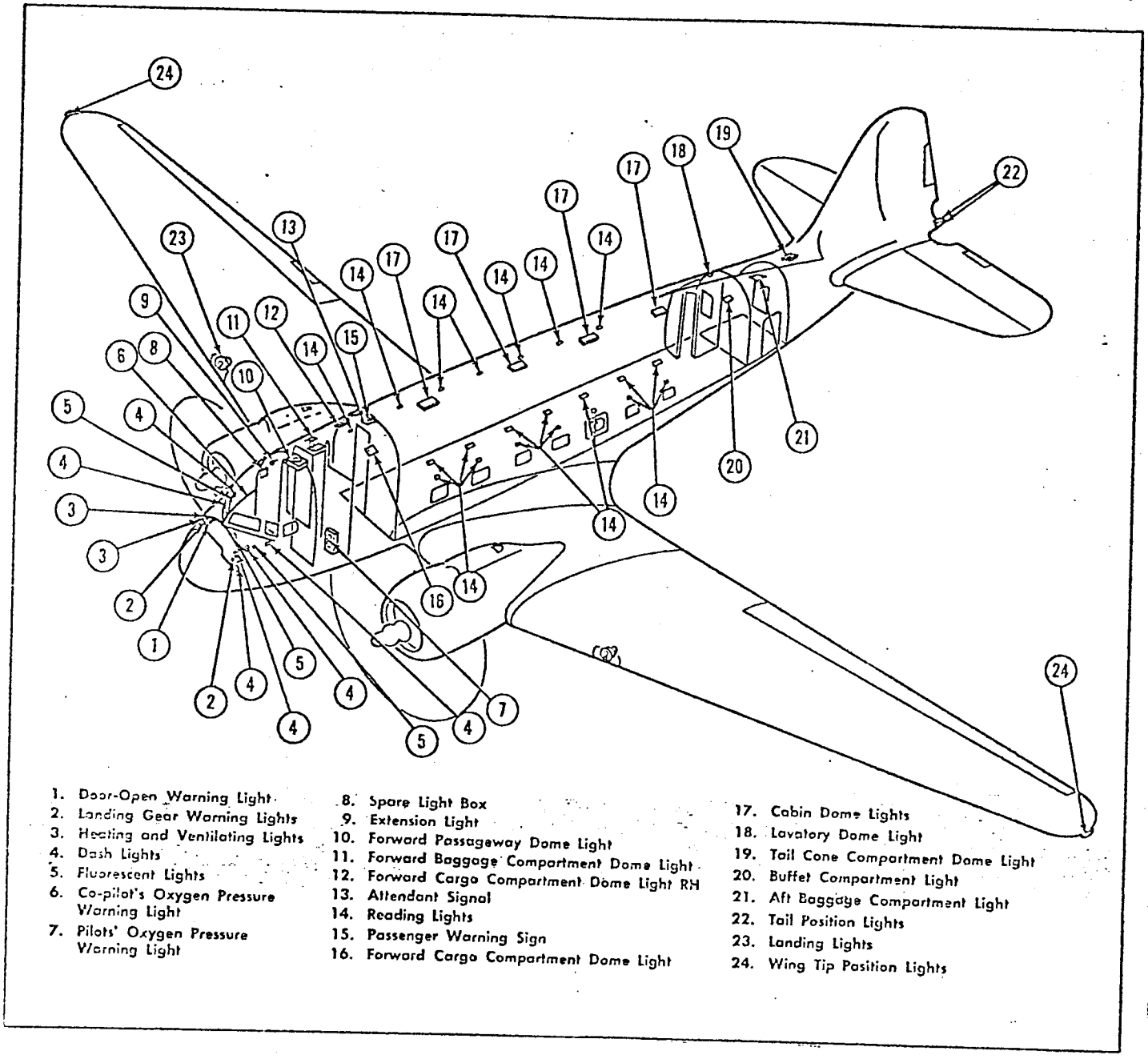

33,170

Figure 8-21. Lighting Locations (C-117 Airplanes)

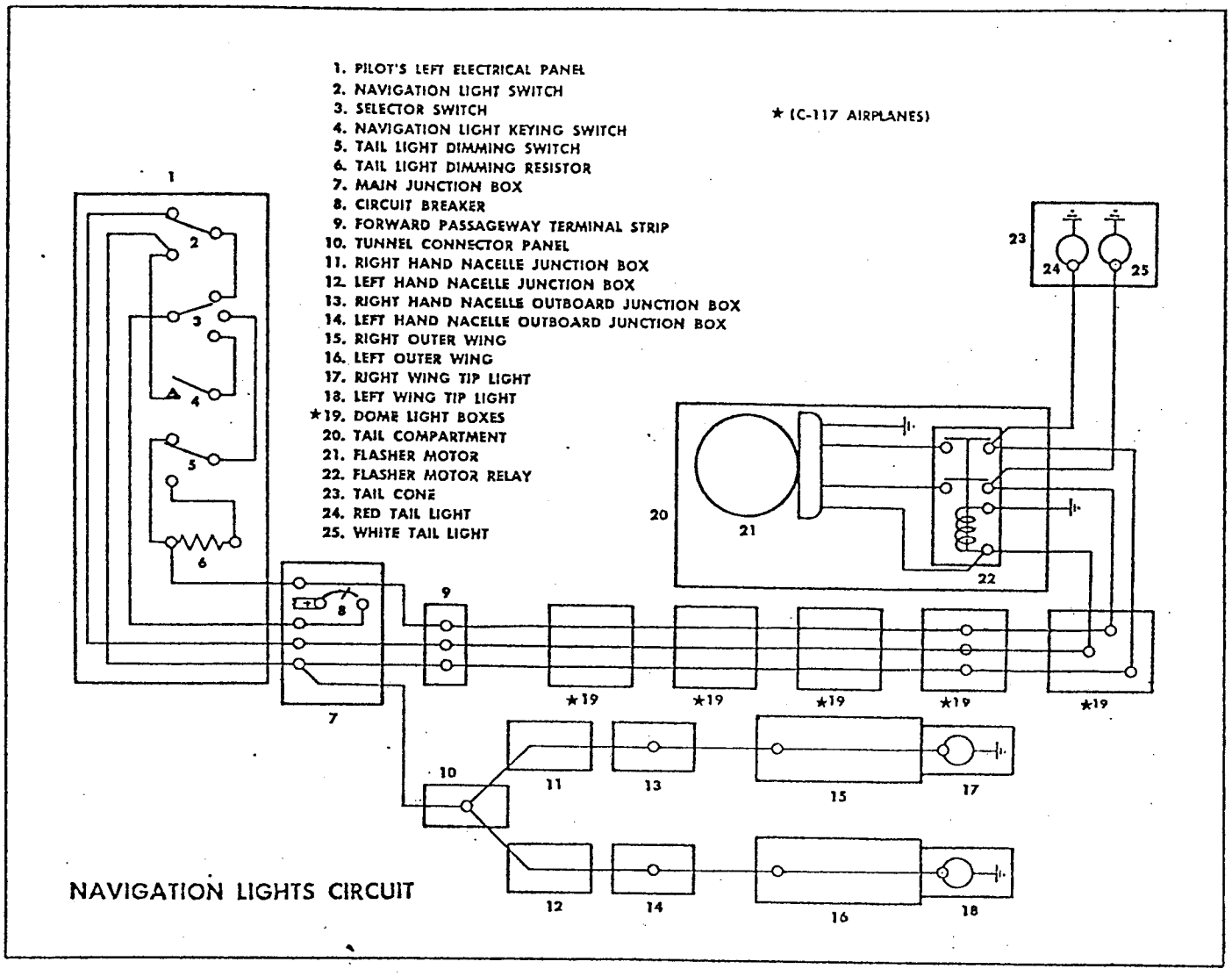

Figure 8-22. Lighting System Schematic (Sheet 1 of 5)

33,171

8-169. **NAVIGATION LIGHTS SYSTEM.** *(See figure 8-22.)* The navigation lights system consists of one single-throw, 3-pole dimming switch, one double-throw, 4-pole switch, one 250-ohm dimming resistor for the wing tip and white taillight, one 100-ohm dimming resistor for the yellow taillight, eight light assemblies (two white lights on both the top and bottom fuselage, one white and one yellow taillight, one red and one green wing tip light), and one C-2 flasher unit. The light switch, placarded STEADY-OFF-FLASH, controls the navigation lights and is mounted on the pilot's left electrical panel. When the switch is in the STEADY position, constant 28-volt d-c power is supplied directly to all eight lights. When the switch is in the FLASH position, steady power is supplied to the four white fuselage lights and to the flasher unit which illuminates the yellow taillight alternately to the wing tip and white taillights. When the dimming switch is placed in the DIM position, the power for all lights (except the four white fuselage lights) passes through dimming resistors. When the switch is in the BRIGHT position, the dimming resistors are bypassed. The circuit is wired to a power source through a 10-ampere circuit breaker located in the main junction box. Anticollision (red) rotating lights are installed on the leading edge of the vertical stabilizer. The light is rotated through a full 360-degree circle. In addition, some C-47 airplanes have anticollision lights installed on both the top and bottom of the fuselage. *(See figure 8-23.)*

8-170. OPERATIONAL CHECKOUT OF NAVIGATION LIGHTS SYSTEM.

a. Connect external power to the airplane, or if external power is not available, turn the master battery switch ON.

b. Turn the NAVIGATION LIGHTS switch to STEADY, and the dimming switch to BRIGHT which will illuminate the eight lights.

c. Turn the dimming switch to DIM. All lights except the four white fuselage lights will dim. Return the dimming switch to BRIGHT.

d. Turn the NAVIGATION LIGHTS switch to FLASH. The four fuselage lights will illuminate

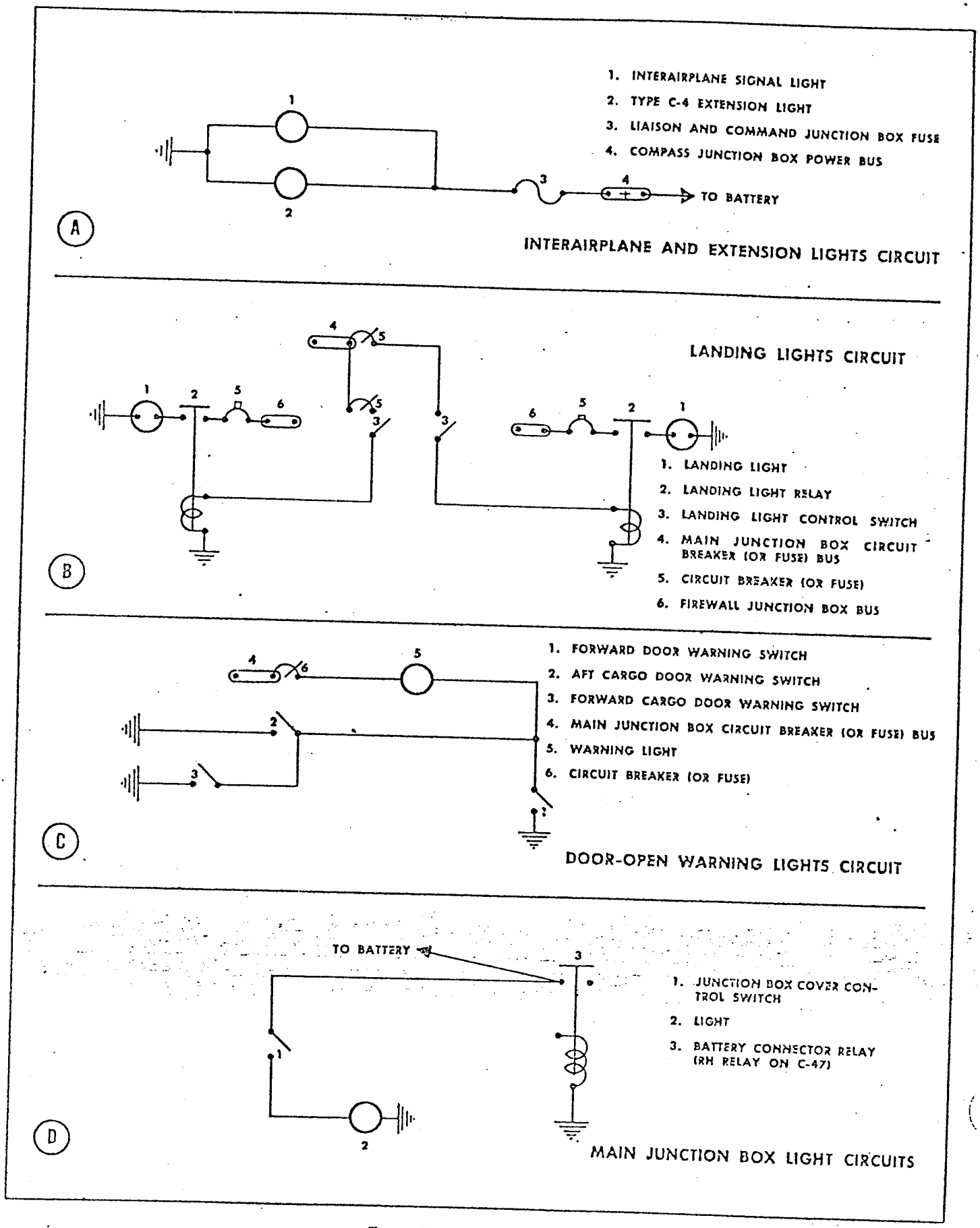

Figure 8-22. Lighting System Schematic (Sheet 2 of 5)

33.172

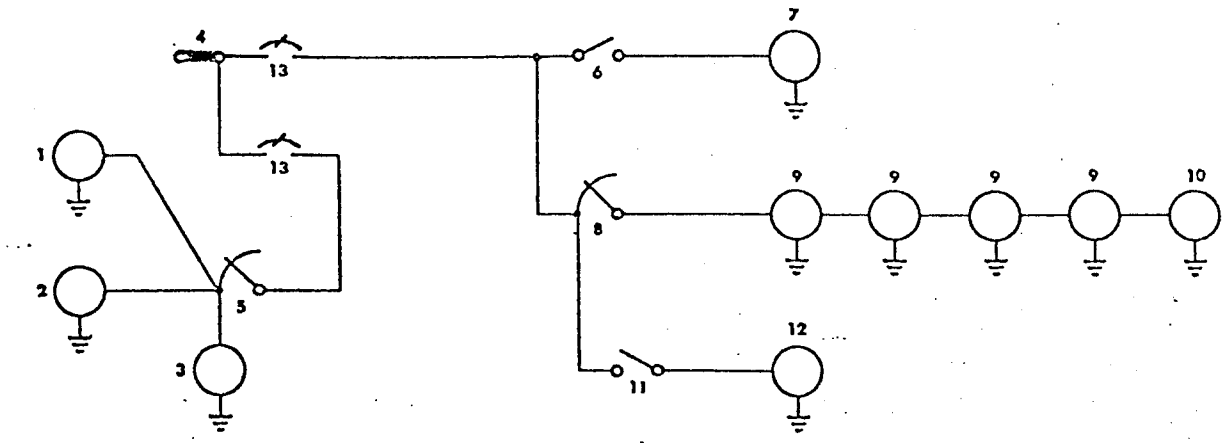

1. Radio Operator's Compartment Dome Light
2. Forward Passageway Dome Light
3. Navigator's Compartment Dome Light
4. Main Junction Box Circuit Breaker (or Fuse) Bus
5. Forward Dome Lights Control Rheostat
6. Navigator's Worktable Light Control Switch
7. Navigator's Worktable Light
8. Aft Dome Lights Control Rheostat
9. Main Cargo Compartment Dome Light
10. Lavatory Dome Light
11. Tail Cone Compartment Dome Light Control Switch
12. Tail Cone Compartment Dome Light
13. Circuit Breaker

DOME LIGHTS CIRCUIT (C-47 AIRPLANES)

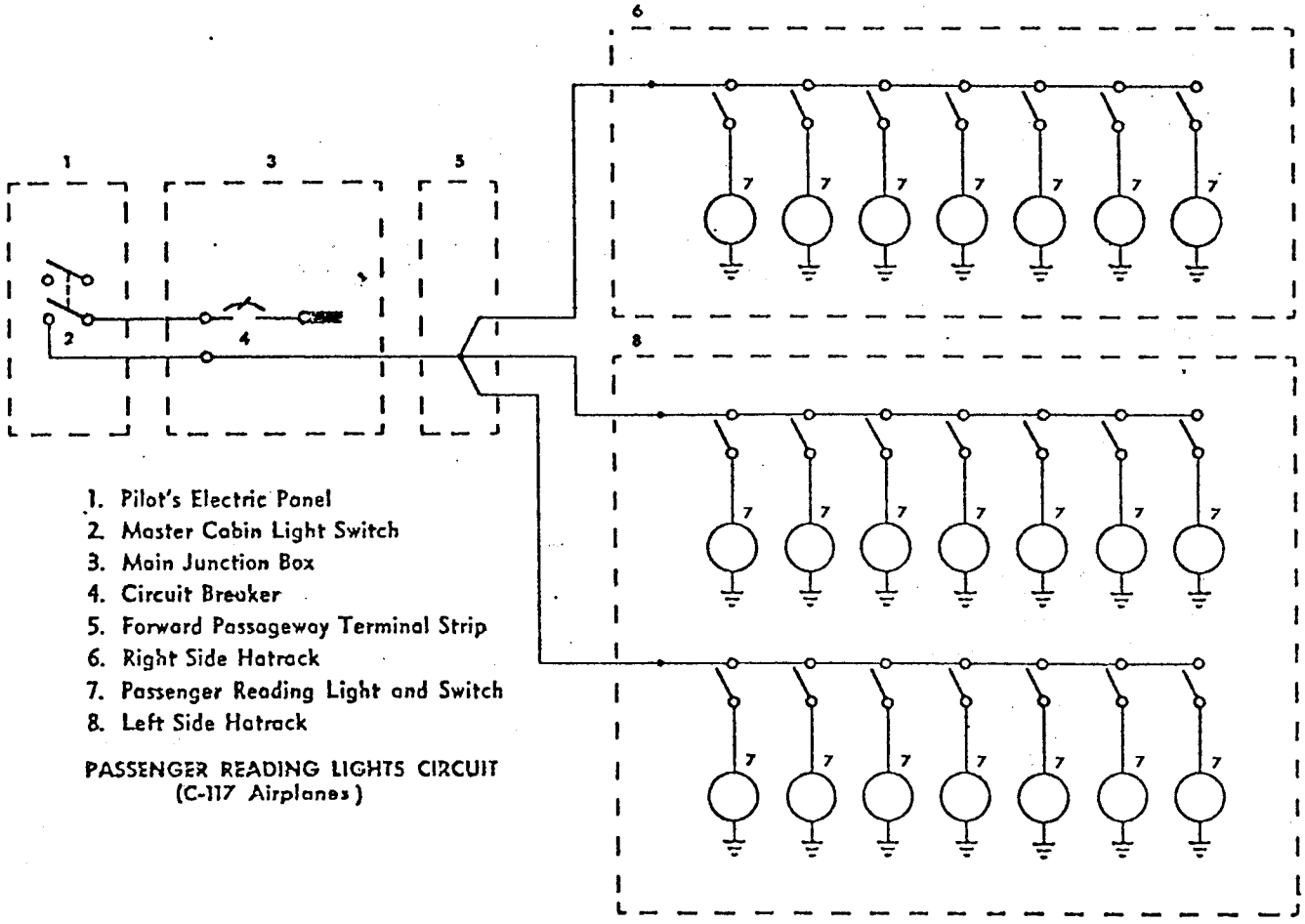

1. Pilot's Electric Panel
2. Master Cabin Light Switch
3. Main Junction Box
4. Circuit Breaker
5. Forward Passageway Terminal Strip
6. Right Side Hatrack
7. Passenger Reading Light and Switch
8. Left Side Hatrack

PASSENGER READING LIGHTS CIRCUIT
(C-117 Airplanes)

Figure 8-22. Lighting System Schemctic (Sheet 3 of 5)

33.173

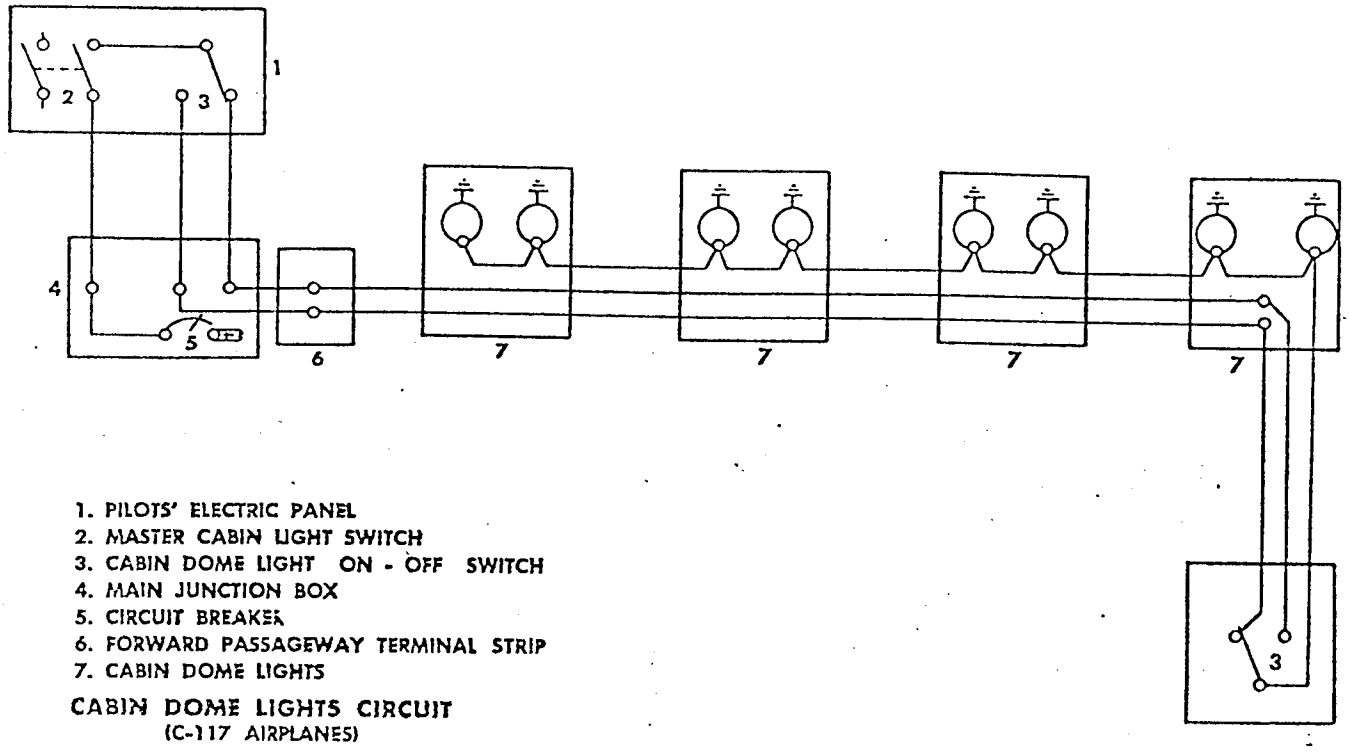

1. PILOTS' ELECTRIC PANEL
2. MASTER CABIN LIGHT SWITCH
3. CABIN DOME LIGHT ON - OFF SWITCH
4. MAIN JUNCTION BOX
5. CIRCUIT BREAKER
6. FORWARD PASSAGEWAY TERMINAL STRIP
7. CABIN DOME LIGHTS

CABIN DOME LIGHTS CIRCUIT
(C-117 AIRPLANES)

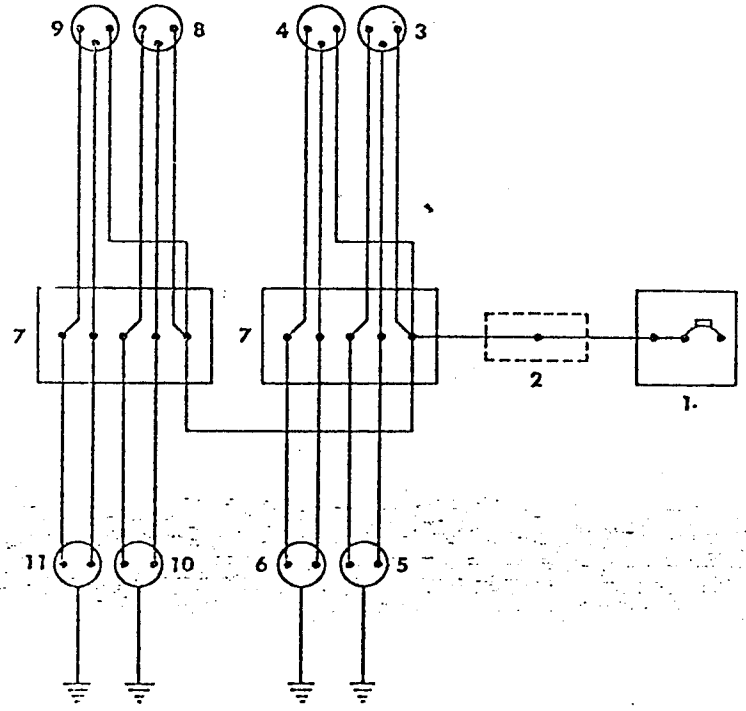

1. MAIN JUNCTION BOX
2. TUNNEL
3. LH OUTBOARD CONTROL
4. LH PEDESTAL CONTROL
5. LH OUTBOARD LIGHT
6. LH PEDESTAL LIGHT
7. TERMINAL STRIP
8. RH PEDESTAL CONTROL
9. RH OUTBOARD CONTROL
10. RH PEDESTAL LIGHT
11. RH OUTBOARD LIGHT

FLUORESCENT LIGHTING

33,174

Figure 8-22. Lighting System Schematic (Sheet 4 of 5)

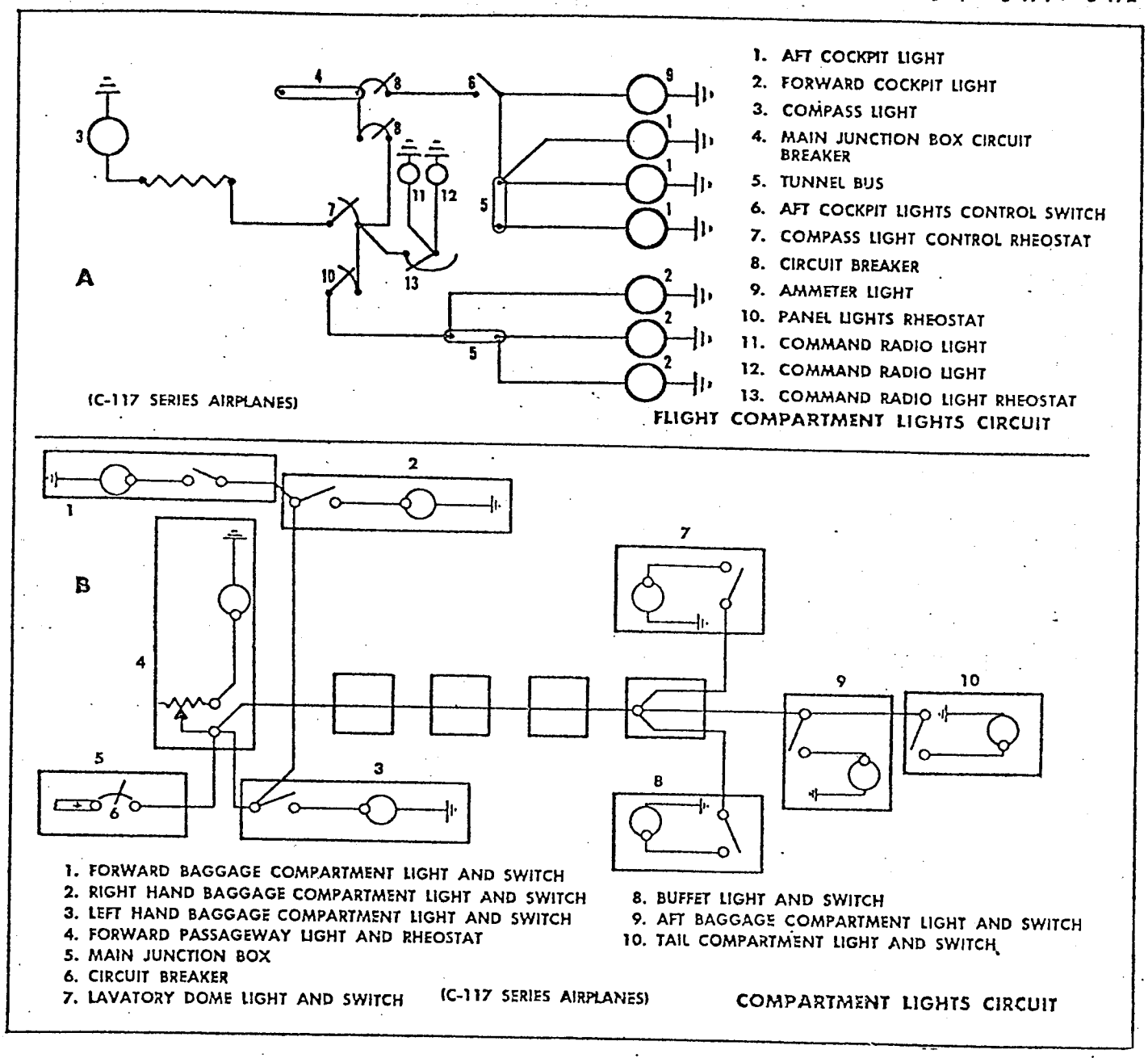

Figure 8-22. Lighting System Schematic (Sheet 5 of 5)

33,175

steadily, and the white tail light and wing tip lights will illuminate alternately to the yellow tail light.

e. Turn the NAVIGATION LIGHTS switch OFF, and remove the power.

f. *Anticollision light assembly:* Place the ANTI-COLLISION LIGHT control switch on the pilot's left electrical panel to the ON position. The anticollision light should illuminate and rotate a full 360 degrees, 45 times per minute.

g. Place the control switch in the OFF position.

8-171. REMOVAL AND INSTALLATION OF COMPONENTS OF NAVIGATION LIGHTS SYSTEM.

8-172. REMOVAL OF WING TIP NAVIGATION LIGHT.

a. Open the navigation lights circuit breaker in the main junction box.

b. Remove the screw from the fairing securing the lens.

c. Carefully remove the fairing and the lens to prevent damage to the cork seal.

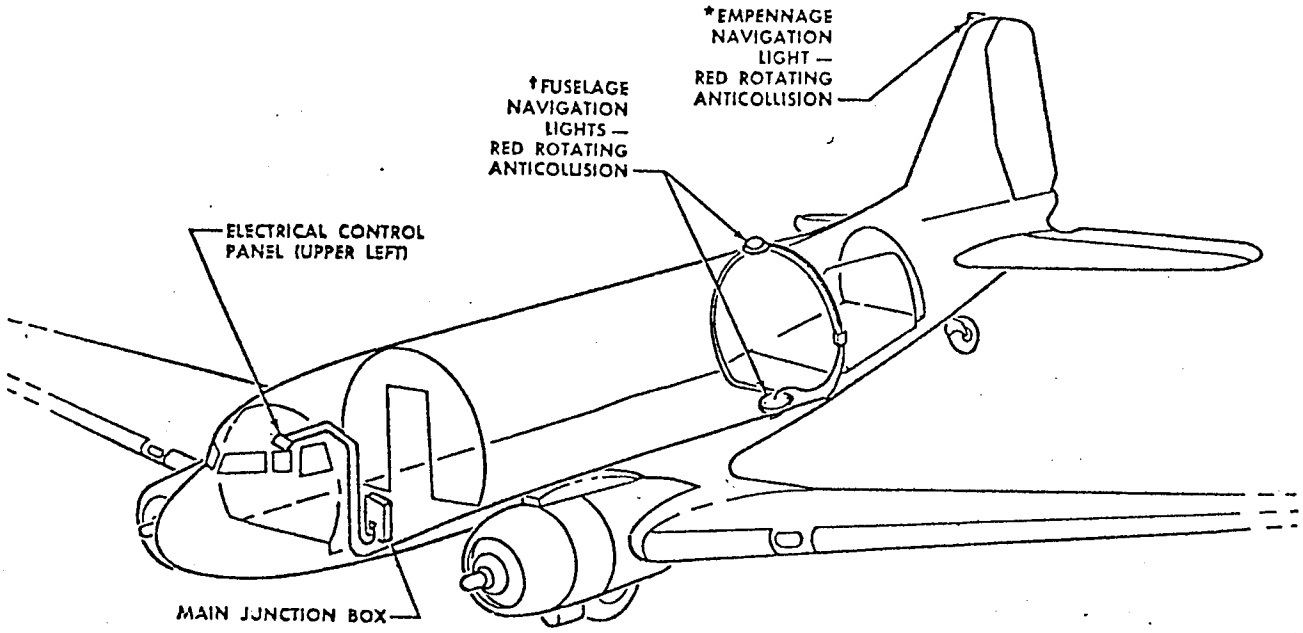

Notes:
*All C-47 airplanes.

†42-24303	†43-48902	†43-49776
43-15556	43-48905	44-76598
43-16084	43-49029	44-77290
43-16158	43-49095	44-76643
43-48501	43-49103	45-946
43-48139	43-49190	45-979
43-48599	43-49250	45-985
43-48708	43-49331	45-1002
43-48783	43-49387	45-1077
43-48892	43-49705	45-1087

Figure 8-23. Anticollision Light Installation

40,212

d. Unlock and remove the bayonet-type light bulb.

e. Remove the three screws which secure the light receptacle to the wing tip structure.

f. Clear the light assembly from the tip to gain access for disconnecting the wiring.

g. Unscrew the contactor retaining cap and remove the contactor, insulator insert, and spring, from the light base and remove the lights.

8-173. INSTALLATION OF WING TIP NAVIGATION LIGHT.

a. Install the contactor, insulator insert, and spring, then screw on the retaining cap.

b. Install the light receptacle with the three attaching screws.

c. Install the light bulb so that when the bulb is locked in place, the flat, silvered side faces aft.

d. Carefully install the lens tightly against the flange of the receptacle. The lens must seat fully on the seal.

e. Position the fairing and secure with the mounting screw. Tighten the screw until snug and the fairing clamps the lens securely in position.

8-174. REMOVAL OF TAIL NAVIGATION LIGHT.

a. Open the navigation lights circuit breaker in the main junction box.

b. Remove the two screws securing the lens retainer to the light assembly.

c. Remove the retainer and the lens.

d. Remove the light bulb.

e. Remove the two screws mounting the light receptacle to the tail cone structure.

f. Disconnect the wiring from the light receptacle.

g. Remove the light receptacle.

8-175. INSTALLATION OF TAIL NAVIGATION LIGHT.

a. Install the light receptacle and secure with the two mounting screws.

b. Install the light bulb.

c. Install the lens and the lens retainer.

8-176. NAVIGATION LIGHTS FLASHER UNIT.

8-177. One navigation lights flasher unit (type C-2) is installed between fuselage stations 121.5 and 136.5 on the lower forward equipment shelf panel. The flasher unit consists of two sets of breaker points alternately cammed open by a 24-volt d-c motor.

8-178. REMOVAL OF NAVIGATION LIGHTS FLASHER UNIT. Disconnect the electrical connector, release the locking hooks, and remove the flasher unit.

8-179. INSTALLATION OF NAVIGATION LIGHTS FLASHER UNIT. Position the flasher unit on the supporting structure, fasten the locking hooks, and connect the electrical connector.

8-180. REMOVAL OF ANTICOLLISION LIGHT ASSEMBLY.

a. Remove the screws at the top of the light assembly dome.

b. Lift off the motor reflector assembly and lens.

c. Remove the attaching screws around the base of the fixture.

d. Lift the unit out of the mounting fairing.

e. Disconnect the electrical connector and remove the unit.

8-181. INSTALLATION OF ANTICOLLISION LIGHT ASSEMBLY.

a. Connect the electrical connector, safety with lock wire, and set the unit into the mounting fairing.

b. Install and tighten the mounting screws.

c. Set the lens and motor assembly in place and secure with the attaching screws at the top of the dome.

8-182. REMOVAL OF ANTICOLLISION LIGHT ASSEMBLY LAMP.

a. Remove the screws at the top of the light assembly dome.

b. Lift off the motor reflector assembly and lens.

c. Loosen the clip retainer screws slightly and slip the clips back off the edge of the lamp retaining flange.

d. Lift out the lamp and disconnect the electrical wires from its base.

8-183. INSTALLATION OF ANTICOLLISION LIGHT ASSEMBLY LAMP.

a. Connect the wires at the base of the lamp and set the lamp down in place.

b. Slip the clips over the edge of the lamp retaining flange and tighten the retainer screws.

c. Set the lens and motor reflector assembly back in place and install the attaching screws.

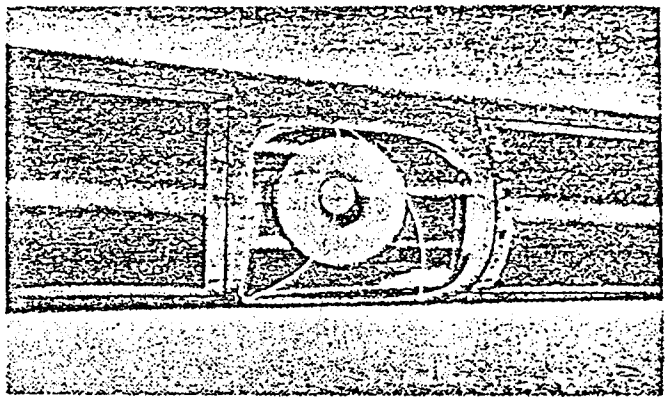

14,352

Figure 8-24. Left Landing Light Installation

8-184. LANDING LIGHTS SYSTEM. *(See figures 8-22 and 8-24.)* Some early C-47 airplanes utilize a reflector and a 24-volt, 420-watt light bulb; all other airplanes utilize a 24-volt, 600-watt sealed beam unit. One landing light assembly is installed in the leading edge of each outer wing panel. In addition to the light assemblies, each landing light circuit incorporates a control switch mounted on the pilot's center electrical panel; a control relay located in the inboard nacelle junction box, and one 5-ampere and one 35-ampere circuit breaker located in the main junction box. When the control switch is placed in the ON position, 24-volt d-c power energizes the control relay to connect the light to the main bus. The light assemblies are adjusted to project a light beam on the ground approximately 430 feet for the left landing light, and 380 feet for the right landing light forward of the nose, and on the centerline of the pilot's seat when the airplane is in a three-point ground attitude.

8-185. OPERATIONAL CHECKOUT OF LANDING LIGHTS SYSTEM.

a. Connect external power to the airplane, or if external power is not available, turn the master battery switch ON.

b. Momentarily turn the LEFT LANDING LIGHT switch to ON. The light beam will meet the ground approximately 430 feet on the centerline of the airplane. Turn the switch OFF.

c. Momentarily turn the RIGHT LANDING LIGHT switch to ON. The light beam will meet the ground approximately 380 feet on the centerline of the airplane. Turn the switch OFF.

8-186. REMOVAL AND INSTALLATION OF COMPONENTS OF LANDING LIGHTS SYSTEM.

8-187. REMOVAL OF LANDING LIGHT.

a. Open the two control circuit breakers in the main junction box, and the main power circuit breakers in the firewall junction boxes.

b. Remove the access doors located over the landing light on top of the leading edge and on top of the wing forward of the front spar.

Note

On airplanes with modified access doors, the landing light may be removed and installed through the access door.

c. On early C-47 airplanes, unscrew the light bulb from the reflector assembly.

d. On all airplanes, remove the bridle assembly, the leading edge retaining strips, and the glass.

e. Disconnect the wiring from the light assembly.

f. On early C-47 airplanes, unfasten the socket clamps and remove the reflector.

g. On all other airplanes, remove the retainer ring and the sealed beam unit.

8-188. INSTALLATION OF LANDING LIGHT.

a. Position the light assembly and secure with clamps or screws as applicable.

Note

The landing light assemblies are not interchangeable. When installing a replacement part, use only the correct part for the side on which it is to be installed. A landing light unit is correctly installed when the manufacturer's nameplate faces downward.

b. Install the leading edge glass, strips, and bridle with the mounting screws.

c. On early C-47 airplanes, screw the bulb into the reflector receptacle.

d. Install the access doors.

8-189. MAINTENANCE OF LANDING LIGHT. Replacement of the bulb, or sealed beam unit, is normally the only maintenance required. When necessary, clean and polish the light reflector as follows:

a. Remove all dust from the reflector with a soft bristle brush.

b. Moisten a piece of cheesecloth with alcohol, Federal Specification O-A-396, and dip in dry lampblack, Federal Specification TT-L-71.

c. Rub the reflector lightly to loosen all dirt.

d. After the alcohol and lampblack mixture has dried, polish the reflector with clean, dry cheesecloth.

Note

When reflector assembly is damaged, worn, or corroded, it may be replaced with sealed beam assembly type PAR-64 and associated parts.

8-190. CABIN AND COMPARTMENT LIGHTS SYSTEM. *(See figure 8-22.)* The C-47 airplanes are equipped with nine dome lights. One dome light is installed in the forward passageway, one in the navigator's compartment, one in the radio operator's compartment, four in the main cabin, one in the lavatory, and one in the tail compartment. On some airplanes, each dome light is controlled by a switch mounted near the light assembly, except for the four main cabin lights which are controlled by two switches (one located at either end of the main cabin); and on other airplanes, the lavatory light and main cabin lights are controlled by a 15-ohm, 150-watt rheostat located overhead near the forward main cabin dome light. A 25-ohm, 100-watt rheostat, located overhead in the forward passageway, controls the radio operator's, navigator's, and forward passageway dome lights. The forward dome lights are supplied power through a 5-ampere circuit breaker, and the aft dome lights through a 10-ampere circuit breaker. Both circuit breakers are located in the main junction box.

8-191. The C-117 airplanes are equipped with 12 dome lights. The four main cabin dome lights are controlled by two switches (one mounted on the pilot's center electrical panel and the other located in the forward main cabin dome light box) which override each other. The power supply from a 10-ampere circuit breaker in the main junction box is controlled by the MASTER switch located adjacent to the switch on the pilot's center electrical panel.

8-192. OPERATIONAL CHECKOUT OF CABIN AND COMPARTMENT LIGHTS SYSTEM (C-47 AIRPLANES).

a. Connect external power to the airplane or if external power is not available, turn the master battery switch ON.

b. Turn the forward passageway light slowly from OFF to BRIGHT. The forward passageway, radio operator's, and navigator's dome lights will illuminate. Turn the rheostat OFF.

c. Momentarily turn the navigator's worktable light on.

d. Turn the main cabin dome light rheostat slowly from OFF to BRIGHT. Check the lavatory, aft cabin, and the three main cabin dome lights for operation, then turn the rheostat OFF.

e. Momentarily switch on the rear compartment light.

8-193. OPERATIONAL CHECKOUT OF CABIN AND COMPARTMENT LIGHTS SYSTEM (C-117 AIRPLANES).

a. Connect external power to the airplane, or if the external power is not available, turn the master battery switch ON.

b. Momentarily switch on each of the seven compartment lights.

c. Check the forward passageway light operation and dimming by turning the control rheostat slowly from OFF to BRIGHT and then to OFF.

d. Turn the CABIN LIGHTS MASTER switch ON.

e. Turn on the cabin dome lights from the DOME LIGHTS switch on the pilot's center electrical panel.

f. Turn off the cabin dome lights from the switch in the main cabin.

g. Turn the CABIN LIGHTS MASTER switch OFF, and remove external power.

8-194. REMOVAL AND INSTALLATION OF COMPONENTS OF CABIN AND COMPARTMENT LIGHTS SYSTEM.

8-195. REMOVAL OF DOME LIGHT.

a. Open the circuit breakers in the main junction box.

b. Remove the mounting screws and the dome light lens.

c. Remove the light bulb.

d. Remove the three screws mounting the dome light to the structure.

e. Disconnect the wiring.

f. Remove the dome light.

8-196. INSTALLATION OF DOME LIGHT.

a. Connect the wiring.

b. Install the dome light with the three mounting screws.

c. Install the light bulb.

d. Install the lens with the three mounting screws.

8-197. **FLIGHT COMPARTMENT LIGHTING SYSTEM.** The flight compartment lighting system consists of six dashlights, one installed on each side of the flight compartment, to illuminate the controls; one dashlight installed on the aft side of the control pedestal to illuminate the rudder trim tab control; and three dashlights, one on either side of the instrument panel just below the windshield, and one on the forward side of the control pedestal, to floodlight the instrument panel. All of the dashlights are controlled by an ON-OFF switch, located on the pilot's center electrical panel, and receive power through a 5-ampere circuit breaker located in the main junction box. A type C-4A map light, mounted on the bulkhead aft of the co-pilot's seat, receives power through the flight compartment lights circuit breaker. The map light incorporates an integral rheostat for controlling the light intensity and an ON-OFF switch.

8-198. OPERATIONAL CHECKOUT OF FLIGHT COMPARTMENT LIGHTING SYSTEM.

a. Turn the master battery switch ON.

b. Turn the COCKPIT LIGHTS switch ON. Check each light for operation.

c. Check the extension light for operation and dimming.

d. Turn the COCKPIT LIGHTS switch OFF.

e. Turn the master battery switch OFF.

8-199. REMOVAL AND INSTALLATION OF COMPONENTS OF FLIGHT COMPARTMENT LIGHTING SYSTEM.

8-200. REMOVAL OF DASHLIGHT.

a. Open the circuit breaker in the main junction box.

b. Remove the light cover by removing the two retaining screws.

c. Disengage and remove the light bulb.

d. Remove the mounting screws attaching the light base to the supporting structure.

e. Disconnect the wiring.

f. Remove the light assembly.

8-201. INSTALLATION OF DASHLIGHT.

a. Connect the wiring to the light assembly.

b. Install the light assembly with the mounting screws.

c. Install the light bulb.

d. Install the cover.

8-202. REMOVAL OF MAP LIGHT.

a. Disconnect the wiring from the co-pilot's radio junction box.

b. Remove the light from the quick-disconnect bracket.

c. Remove the colored filter.

d. Remove the lock ring retaining the lens.

e. Remove the lens.

f. Remove the light bulb.

8-203. INSTALLATION OF MAP LIGHT.

a. Install the light bulb.

b. Install the lens and the retaining lock ring.

c. Install the colored filter.

d. Mount the light on the quick-disconnect bracket.

e. Connect the wiring to the co-pilot's radio junction box.

8-204. **INSTRUMENT LIGHTS SYSTEM.** The three electrical panels are equipped with indirect plastic panel lighting controlled by a 50-ohm, 50-watt rheostat mounted on the pilot's left electrical panel. The magnetic compass is illuminated by a small "grain-of-wheat"-type light bulb which is installed directly in the compass. The light is controlled by a 175-ohm rheostat which receives power through a 140-ohm resistor. All instrument lights are connected to the main bus through a 5-ampere circuit breaker located in the main junction box.

8-205. OPERATIONAL CHECKOUT OF INSTRUMENT LIGHTS SYSTEM.

a. Turn the master battery switch ON.

b. Turn the ELECTRICAL PANEL LIGHTS rheostat fully clockwise.

c. Check each light on all three electrical panels for operation.

d. Turn the rheostat slowly to OFF. Check the lights for dimming before they are turned off.

e. Turn the COMPASS LIGHT rheostat on slowly, and check the compass light operation and dimming.

f. Turn the master battery switch OFF.

8-206. REMOVAL AND INSTALLATION OF COMPONENTS OF INSTRUMENT LIGHTS SYSTEM.

8-207. REMOVAL OF PLASTIC PANEL LIGHT.

a. Open the circuit breaker in the main junction box.

b. Unscrew the retaining cap from the light assembly.

c. Remove the light bulb.

d. Dismount the electrical panel on which the light assembly is mounted.

e. Remove the rubber seal serving as a retainer for the light assembly.

f. Remove the light assembly from the electrical panel.

g. Unsolder the wiring and remove the light assembly.

CAUTION

DO NOT heat the terminal too long when unsoldering the wiring as the plastic lens in the light assembly will melt.

8-208. INSTALLATION OF PLASTIC PANEL LIGHT.

a. Solder the wiring to the light assembly.

CAUTION

DO NOT heat the terminal too long when soldering the wiring as the plastic lens in the light assembly will melt.

b. Align the tab on the light assembly with the key slot in the panel, and insert the light assembly.

c. Install the rubber seal to hold the light assembly securely in position.

d. Install the light bulb with the glass end first.

e. Screw on the cap.

8-209. **FLUORESCENT INSTRUMENT LIGHTS SYSTEM.** *(See figure 8-22.)* Four fluorescent light assemblies, equipped with ultraviolet filters, illuminate the instrument panel without glare causing the dial markings on the instruments to fluoresce. Each light (one is installed on each side of the pilot's compartment and two are installed on the control pedestal) receives power through a 5-ampere circuit breaker, located in the main junction box, and controlled by a dimming switch.

CAUTION

The ultraviolet energy of these lights is harmless in any permanent form, but always adjust the lights so that they do not shine in the pilot's eyes.

8-210. REMOVAL AND INSTALLATION OF COMPONENTS OF FLUORESCENT LIGHTS SYSTEM.

8-211. REMOVAL OF FLUORESCENT LIGHT.

a. Open the circuit breaker in the main junction box.

b. Loosen the two cover retaining screws.

c. Twist the cover to unlock and remove it.

d. Remove the light bulb.

e. Remove the mounting screws from the base of the light assembly.

f. Disconnect the wiring from the light assembly.

8-212. INSTALLATION OF FLUORESCENT LIGHT.

a. Connect the wiring to the light assembly.

b. Secure the light assembly to the support structure.

c. Install the light bulb.

d. Slide the cover into position and twist to lock.

e. Tighten the cover retaining screws.

8-213. REMOVAL OF FLUORESCENT LIGHT DIMMING SWITCH.

a. Open the circuit breaker in the main junction box.

b. Loosen the setscrew in the control knob and remove the knob.

c. Dismount the switch from the support structure.

d. Disconnect the electrical wiring, and remove the switch assembly.

8-214. INSTALLATION OF FLUORESCENT LIGHT DIMMING SWITCH.

a. Connect the electrical wiring.

b. Install the switch on the support structure.

c. Install the control knob and tighten the setscrew.

8-215. **READING LIGHT SYSTEM (C-117 AIRPLANES).** *(See figure 8-22.)* An individual reading light and control switch are installed in the hatrack above each passenger's seat. The reading light circuit is controlled by the CABIN LIGHTS MASTER switch mounted on the pilot's center electrical panel, and receives power from a 25-ampere circuit breaker located in the main junction box.

8-216. REMOVAL AND INSTALLATION OF COMPONENTS OF READING LIGHT SYSTEM.

8-217. REMOVAL OF READING LIGHT.

a. Open the circuit breaker in the main junction box.

b. Remove the screws which secure the reading light cover plate.

c. Remove the bayonet-type light bulb.

8-218. INSTALLATION OF READING LIGHT.

a. Install the bayonet-type light bulb.

b. Install the cover plate.

8-219. **INTERAIRCRAFT SIGNAL LIGHT.** On some airplanes, a receptacle is provided on the aft bulkhead of the pilot's compartment behind the co-pilot's seat to accommodate a type C-3A, 24-volt signal light.

8-220. **LIGHT REPLACEMENT.** (See tables 8-10 and 8-11.)

TABLE 8-10

LIGHT REPLACEMENT - EXTERIOR LIGHTING

Light Assembly	*Part Number*	*Bulb Replacement*
Landing	Dietz DO-WSX-LH or -RH	Mazda G-25, 24 volt, 420 watt, Mogul Prefocus
	AN3130-4560 with AN3148-1 Light Holder	AN3130-4560
Navigation, Tail (Yellow)	AN3092-( )	AN3121-313
Navigation, Tail (White)	AN3092-2	AN3121-313
Navigation, Wing	Grimes, Model E, No. 1285 LH or RH	AN3122-1524
Navigation, Fuselage	AN3097-2	AN3120-1047

TABLE 8-11

LIGHT REPLACEMENT - INTERIOR LIGHTING

Light Assembly	*Part Number*	*Bulb Replacement*
Plastic Panel	Grimes No. A-6165-327	AN3140-327
Generator Warning	AN3157-6	AN3121-313
Cockpit	Griff-Ho Dashlight	AN3121-313
Compass	Furnished with Compass	AN5734-2
Door Open Warning	Korry 103S	AN3121-313
Fuel Pressure Warning	Korry 103S	AN3121-313
Heat and Vent Warning	Air Force Specification 44A18454-2	AN3121-313
Oil Pressure Warning	Korry 103S	AN3121-313
Oxygen Pressure Warning	Air Force Specification 42B3593-2	AN3121-313

TABLE 8-11 (Continued)

Light Assembly	*Part Number*	*Bulb Replacement*
Parapack Release Indicator (C-47 Airplanes)	Korry 103S	AN3121-313
Parapack Warning (C-47 Airplanes)	Korry 103S	AN3121-313
Paratroop Warning (C-47 Airplanes)	Korry 103S	AN3121-313
Fire Warning	Korry 103ARP	AN3121-313
Landing Gear Warning	Air Force Specification 44A18454-2 or -3	AN3121-313
Map Reading	Type C-4A, 24-volt (Specification MIL-L-6484A)	AN3121-313
Fluorescent	AN3038-1	AN3125-1
Main Junction Box	Cannon SCF-D-O	AN3124-307
Navigator's Worktable	Type A-11 (Air Force Specification 32372)	Mazda No. 308
Reading (C-117 Airplanes)	H. A. Douglas 2116	AN3124-307
	5189002-12	AN3124-307
Passenger Warning (C-117 Airplanes)	Cannon SCF-DB	AN3124-307
Dome	Gem City HD 1001	AN3124-307
	Rosen 21	AN3131-303
Blower Warning	Air Force Specification 42B3593-1	AN3121-1818
Attendant Call (C-117 Airplanes)	Korry 103S	AN3121-313
Interaircraft Signal	C-3A 24 volt (Army Specification 94-32288)	

8-221. LANDING GEAR CIRCUITS.

8-222. GENERAL DESCRIPTION. *(See figure 8-25.)* The landing gear warning circuit alerts the flight compartment to malfunctions or unsafe conditions existing on the hydraulically actuated main landing gear. The landing gear safety circuit (some C-47 airplanes) prevents inadvertent retraction of the landing gear while the airplane weight is on the gear. Refer to Section XII for the landing gear circuit wiring diagrams.

8-223. OPERATIONAL CHECKOUT OF LANDING GEAR CIRCUITS.

a. Place the landing gear control valve in NEUTRAL and open both throttles.

b. Connect external power to the airplane. If external power is not available, turn the master battery switch ON. With power at the main bus, the green warning light will illuminate.

c. Move the landing gear control valve handle slightly out of the NEUTRAL detent towards the DOWN position. The green warning light will go out and the red warning light will illuminate.

d. With the control valve slightly out of NEUTRAL, close each throttle separately. The warning horn will sound when either throttle reaches approximately the one-quarter OPEN position.

e. With both landing gear ground locks installed and the control valve in NEUTRAL, raise the latch handle to the LATCH RAISED position. The red warning light will illuminate.

f. Return the latch handle to the POSITIVE LOCK position and remove power from the airplane.

8-224. TROUBLE SHOOTING OF LANDING GEAR CIRCUITS. Trouble shooting of the landing gear circuits follows the standard procedures outlined in paragraph 8-23.

8-225. LANDING GEAR SAFETY CIRCUIT (SOME C-47 AIRPLANES).

8-226. The landing gear safety circuit consists of a spring-loaded solenoid mounted adjacent to the landing gear latch handle on the floor between the pilot's seat; a spring-loaded switch mounted on the compensating arms of each main landing gear, and one set of contacts in each downlock switch (a component of the warning circuit). The solenoid, when not energized, is spring loaded to lock the latch handle in the POSITIVE LOCK position. Both landing gears must be down and locked, to position the downlock switch correctly, and the struts of both gears must be fully extended to close both safety switches before the solenoid energizes and unlocks the latch handle. The landing gear safety circuit receives power through a 15-ampere circuit breaker located in the main junction box. In an emergency, the pilot can disengage the solenoid manually by pushing the solenoid linkage.

8-227. REMOVAL AND INSTALLATION OF COMPONENTS OF LANDING GEAR SAFETY CIRCUIT.

8-228. LANDING GEAR SAFETY SOLENOID.

8-229. The 24-volt, intermittent duty solenoid locks the latch handle to the POSITIVE LOCK position when deenergized. When the weight of the airplane is off the landing gear, the solenoid is energized and

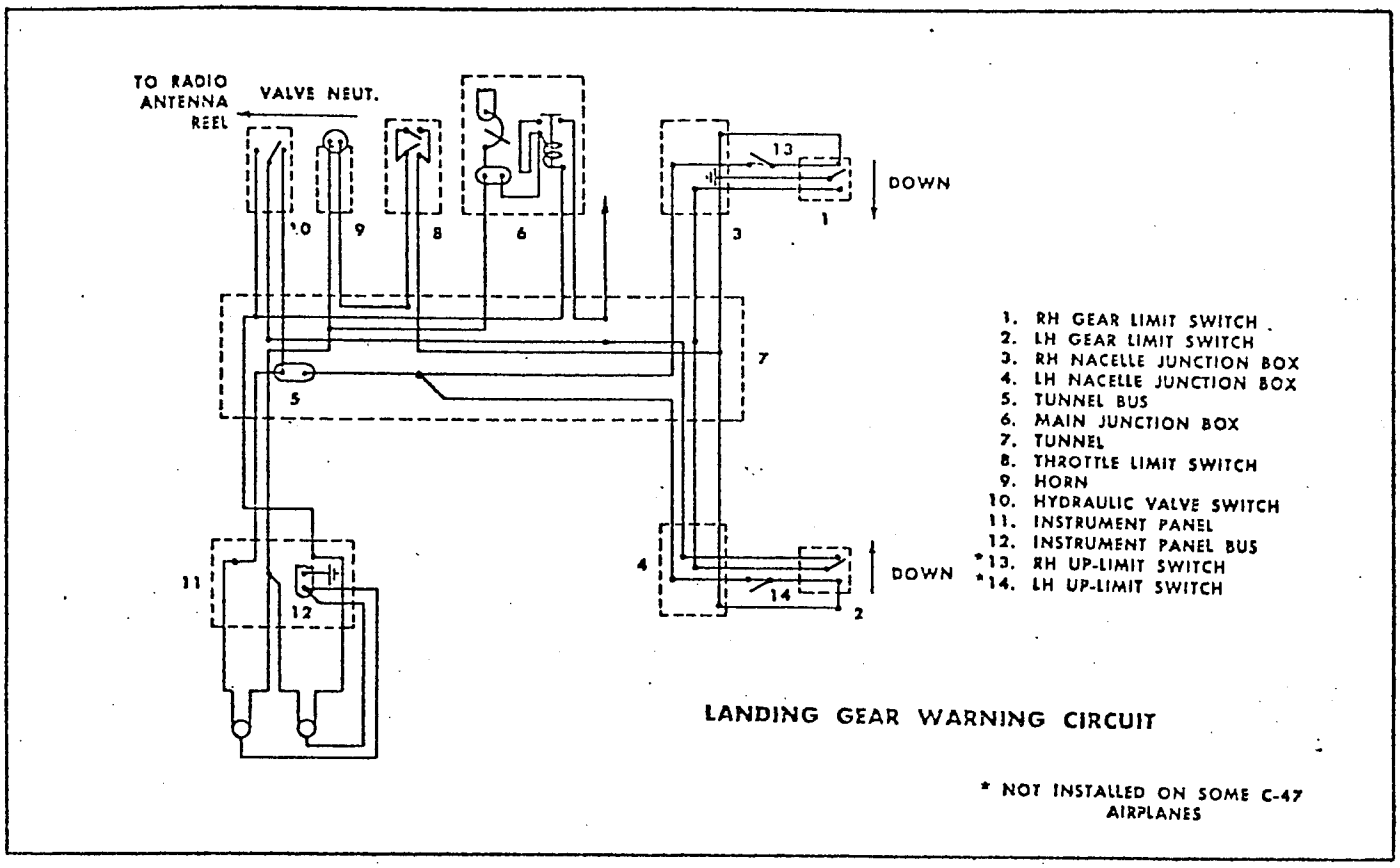

Figure 8-25. Landing Gear Circuit Schematic

14,489

releases the latch handle, which then can be raised. When the latch handle is raised to the UNLATCH position, the downlock switch is released and deenergizes the solenoid.

8-230. REMOVAL OF LANDING GEAR SAFETY SOLENOID.

a. Open the circuit breaker in the main junction box.

b. Remove the solenoid cover.

c. Remove the cotter pin and clevis pin linking the solenoid shaft to the locking catch.

d. Remove the four solenoid mounting screws, washers, and the solenoid.

e. Disconnect the wiring.

8-231. INSTALLATION OF LANDING GEAR SAFETY SOLENOID.

a. Connect the wiring.

b. Install the solenoid on the mounting bracket and secure with the four washers and screws.

c. Connect the solenoid shaft to the latching catch with the clevis pin and the cotter pin.

Note

If necessary, reduce the length of the solenoid shaft to obtain $\frac{3}{32}$ ($\pm \frac{1}{16}$) inch clearance between the catch and the shaft when fully extended.

d. Install the solenoid cover with the attaching screws.

8-232. LANDING GEAR SAFETY SWITCH.

8-233. A single-pole, double-throw limit switch is installed on the inboard compensating arm of each landing gear. The circuit is wired to the normally open side of the switch to provide a fail-safe characteristic.

8-234. REMOVAL OF LANDING GEAR SAFETY SWITCH.

a. Open the circuit breaker in the main junction box.

b. Loosen the jamnut and remove the setscrew from the switch plunger.

c. Remove the two screws and nuts mounting the switch assembly to the support bracket.

d. Remove the access plate from the switch housing by removing the attaching screws and lockwashers.

e. Remove the nut and ferrule (on airplanes with flexible conduit, remove the nut and adapter) from the switch housing.

f. Disconnect the wiring from the switch terminals.

g. Remove the switch from the housing.

8-235. INSTALLATION OF LANDING GEAR SAFETY SWITCH.

a. Connect the wiring to the switch terminals as shown in the wiring diagram, Section XII.

b. Position the switch in the housing.

c. Connect the conduit to the switch housing.

d. Install the access plate on the switch housing with the attaching screws and lockwashers.

e. Install the switch on the support bracket with the two screws and nuts.

f. Install the setscrew in the switch plunger and tighten the jamnut.

8-236. ADJUSTMENT OF LANDING GEAR SAFETY SWITCH ASSEMBLY.

a. Jack up the airplane until the main landing gear clears the ground.

b. Compress the shock strut 1 inch from the fully extended position, using a small hand jack.

c. Adjust the landing gear safety switch so that it just opens with the shock strut compressed 1 inch by adjusting the length of the setscrew.

d. Tighten the jamnuts locking the setscrew.

8-237. LANDING GEAR WARNING CIRCUIT. *(See figure 8-25.)*

8-238. The landing gear warning circuit consists of two warning light assemblies (one red and one green), two throttle limit switches, a landing gear selector valve switch, and two gear downlock limit switches. Early C-47 airplanes incorporate a light dimming switch and three resistors which are replaced by two gear-up limit switches on C-117 and late C-47 airplanes. The green light illuminates when the landing gear is locked down and the landing gear selector valve handle is in NEUTRAL. On early C-47 airplanes, the red light illuminates when either landing gear is unlocked, or the selector valve handle is out of NEUTRAL. On C-117 and late C-47 airplanes, the operation of the warning lights is identical to the early C-47 airplanes, except the red light is off when both main gears are fully retracted. The warning horn sounds when either throttle is retarded past the one-quarter open position with the landing gear not down and locked or with the selector valve handle out of NEUTRAL. On early C-47 airplanes where the warning lights illuminate continuously during flight, the light intensity can be dimmed by a switch connecting two 15-ohm resistors to the green light and one 20-ohm resistor to the red light; on C-117 and late C-47 airplanes, the up-limit switches turn all warning lights off during normal flight and eliminate the necessity for the light dimming installation. A relay, installed in the main junction box, operates the antenna reel control box warning light, in the radio operator's compartment, if the trailing antenna is extended when the airplane is preparing to land. The circuit receives power through a 15-ampere circuit breaker located in the main junction box.

8-239. REMOVAL AND INSTALLATION OF COMPONENTS OF LANDING GEAR WARNING CIRCUIT.

8-240. LANDING GEAR WARNING HORN.

8-241. The landing gear warning horn is mounted on the left side panel of the flight compartment outboard of the pilot's seat. The horn is connected to the two throttle switches and the two downlock switches, so that with the landing gear fully retracted in flight, the horn will not sound until either throttle is retarded past the one-quarter open position. On the ground, the warning horn sounds when the landing gear is locked down, either throttle is closed, and the landing gear selector valve handle is moved out of the NEUTRAL detent.

8-242. REMOVAL OF LANDING GEAR WARNING HORN.

a. Remove the four screws securing the horn to the mounting bracket, and remove the horn.

b. Disconnect the wiring from the horn.

8-243. INSTALLATION OF LANDING GEAR WARNING HORN.

a. Connect the wiring to the horn.

b. Install the horn on the mounting bracket and secure with the four mounting screws.

8-244. LANDING GEAR WARNING CIRCUIT THROTTLE SWITCHES.

8-245. The landing gear warning throttle switches are located in a dual switch box installed below the floor in the forward passageway. The sliding contacts, clamped directly to the throttle cables, are closed when the throttles are in the low rpm position.

8-246. REMOVAL OF LANDING GEAR WARNING CIRCUIT THROTTLE SWITCHES.

a. Open the circuit breaker in the main junction box.

b. Remove the forward passageway floor panel.

c. Unclamp each lever assembly from the throttle cable by removing the screw and nut from the clamp, then disengage the lever from the sliding rod.

d. Remove the cover from the switch box.

e. Disconnect the wiring from the switch terminals.

f. Remove the three mounting screws, spacers, and nuts securing the switch box to the frame.

g. Remove the switch box.

h. Remove the sliding rods.

8-247. INSTALLATION OF LANDING GEAR WARNING CIRCUIT THROTTLE SWITCHES.

a. Install the sliding rods in the switch box.

b. Install the switch box with the three screws, spacers, and nuts.

c. Connect the wiring to the switch terminals as shown in the wiring diagram, Section XII.

d. Install the cover on the switch box.

e. Engage the levers in the slots of the sliding rods and clamp the levers to the throttle cables with the two screws and nuts.

f. Install the forward passageway floor panel.

8-248. ADJUSTMENT OF LANDING GEAR WARNING THROTTLE SWITCHES.

a. Position both throttles at the one-quarter open position.

b. Loosen the clamps securing the switch levers to the throttle cables.

c. Place the landing gear selector valve out of NEUTRAL.

d. Turn the master battery switch ON.

e. Slide the switch rod along the throttle cable until the horn sounds, then secure the clamps.

f. Turn the master battery switch OFF, return the landing gear selector valve to NEUTRAL, and open the throttles.

8-249. LANDING GEAR WARNING CIRCUIT LIMIT SWITCHES. The landing gear selector valve limit switch, actuated when the handle is in the NEUTRAL detent, is installed in a switch box mounted on the hydraulic control panel.

8-250. The landing gear downlock limit switch is attached to a support located on the forward face of the wing forward spar in each nacelle, and is actuated by a lever when the mechanical safety latch handle is in the POSITIVE LOCK or SPRING LOCK position. The right downlock switch is grounded in the right nacelle junction box.

8-251. One landing gear up-limit switch is installed (C-117 and late C-47 airplanes) on the fairing of each nacelle, and actuated to OPEN by the rear brace strut. When the landing gear is fully retracted, the switches open the red warning light circuit. The red warning light remains off until either main landing gear has extended at least 3 inches. The up-limit switch does not, however, shut off the warning horn.

8-252. REMOVAL OF LANDING GEAR WARNING CIRCUIT LIMIT SWITCHES.

a. Open the circuit breaker in the main junction box.

b. Remove the setscrew from the switch plunger.

c. Remove the screws securing the switch assembly to the support structure.

d. Remove the access plate from the switch housing.

e. Disconnect and remove the electrical wiring from the switch housing.

f. Remove the switch from the housing.

8-253. INSTALLATION OF LANDING GEAR WARNING CIRCUIT LIMIT SWITCHES.

a. Connect the wiring to the switch as shown in the wiring diagram, Section XII.

b. Install the switch in the switch housing.

c. Install the access plate on the switch housing.

d. Secure the switch assembly to the supporting structure.

e. Position the wiring conduit to the correct bend radius and tighten the knurled retaining nut.

f. Install the setscrew in the switch plunger, and lock in position by tightening the jamnuts.

8-254. ADJUSTMENT OF LANDING GEAR WARNING CIRCUIT LIMIT SWITCHES. Before proceeding with the adjustments outlined in the following paragraphs, jack up the airplane until the main landing gear clears the ground.

8-255. ADJUSTMENT OF LANDING GEAR WARNING CIRCUIT DOWNLOCK SWITCH.
(See figure 8-26.)

a. After installing the switch and setscrew, check the switch for free action of the lever and spring.

b. With the landing gear truss fully down and the latch spade bottomed in the guide, adjust the mechani-

cal trip latch to secure the switch lever in a horizontal position.

c. Raise the latch spade ¾ inch. Adjust the stop screw on the lever handle to allow 7/16-inch clearance between the lever and the trip latch.

d. Adjust the setscrew on the limit switch to allow ⅛-inch clearance from the lever.

e. Raise the upper truss allowing the mechanical latch to return to the SPRING LOCK position.

f. Lower the upper truss slowly and check for 1/32-inch clearance between the trip latch and the lever, until the latch spade engages the slot in the hook of the actuating cylinder.

8-256. ADJUSTMENT OF LANDING GEAR WARNING CIRCUIT UP-LIMIT SWITCH (C-117 AND LATE C-47 AIRPLANES).

a. Adjust the clamp on the fork arm of the landing gear to align with the plunger of the switch.

b. With the landing gear retracted, position the clamp on the fork arm so it will not push the shoulder on the plunger to within ⅜ inch of the bottom of the switch.

CAUTION

Excessive overtravel of the plunger will damage the switch.

c. Adjust the setscrew on the end of the plunger and reposition the clamp on the fork arm to obtain the minimum dimension.

d. When the correct dimension is obtained, lock the setscrew on the plunger by tightening the jamnuts.

8-257. ADJUSTMENT OF LANDING GEAR WARNING CIRCUIT SELECTOR VALVE SWITCH.

a. Place the landing gear selector valve handle in the NEUTRAL detent which will depress the plunger of the switch.

b. The remaining overtravel of the plunger will be ⅛-inch minimum.

c. Adjust the length of the setscrew to obtain the minimum dimension.

d. When the dimension is obtained, lock the setscrew by tightening the jamnuts.

8-258. LANDING GEAR WARNING CIRCUIT LIGHTS.

8-259. Each of the two light assemblies installed is a dual unit on early C-47 airplanes, and a single unit on C-117 and late C-47 airplanes. The warning lights are

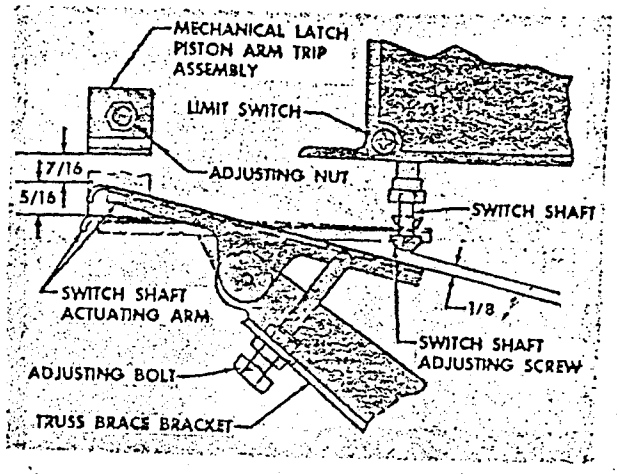

33,176

Figure 8-26. Landing Gear Warning Switch Adjustment

installed with the red light located above the green light on the right side of the instrument panel. The green warning light illuminates when the landing gear is fully down with the mechanical latch handle in the POSITIVE LOCK or SPRING LOCK position, and the selector valve handle positioned in the NEUTRAL detent. The red warning light illuminates when the latch handle is in the LATCH RAISED position, or when the selector valve handle is out of the NEUTRAL detent. On early C-47 airplanes, the red warning light illuminates continuously under normal flight conditions; therefore, early C-47 airplanes incorporate a warning light dimming switch and resistors. The C-117 and late C-47 airplanes incorporate an up-limit switch which turns off the red warning light when the landing gear is fully retracted.

8-260. REMOVAL OF LANDING GEAR WARNING CIRCUIT LIGHT.

a. Open the circuit breaker in the main junction box.

b. To gain access to the light bulbs, remove the colored lens from the light assembly.

c. Unlock and remove the bayonet-type light bulbs.

d. If necessary to replace the light assembly, two men will be required to remove the hardware attaching the light assembly to the instrument panel.

e. Carefully unsolder the wiring and remove the light assembly.

8-261. INSTALLATION OF LANDING GEAR WARNING CIRCUIT LIGHT.

a. Solder the wiring to the terminals of the light assembly as shown in the wiring diagram, Section XII.

b. Position and secure the light assembly in the instrument panel.

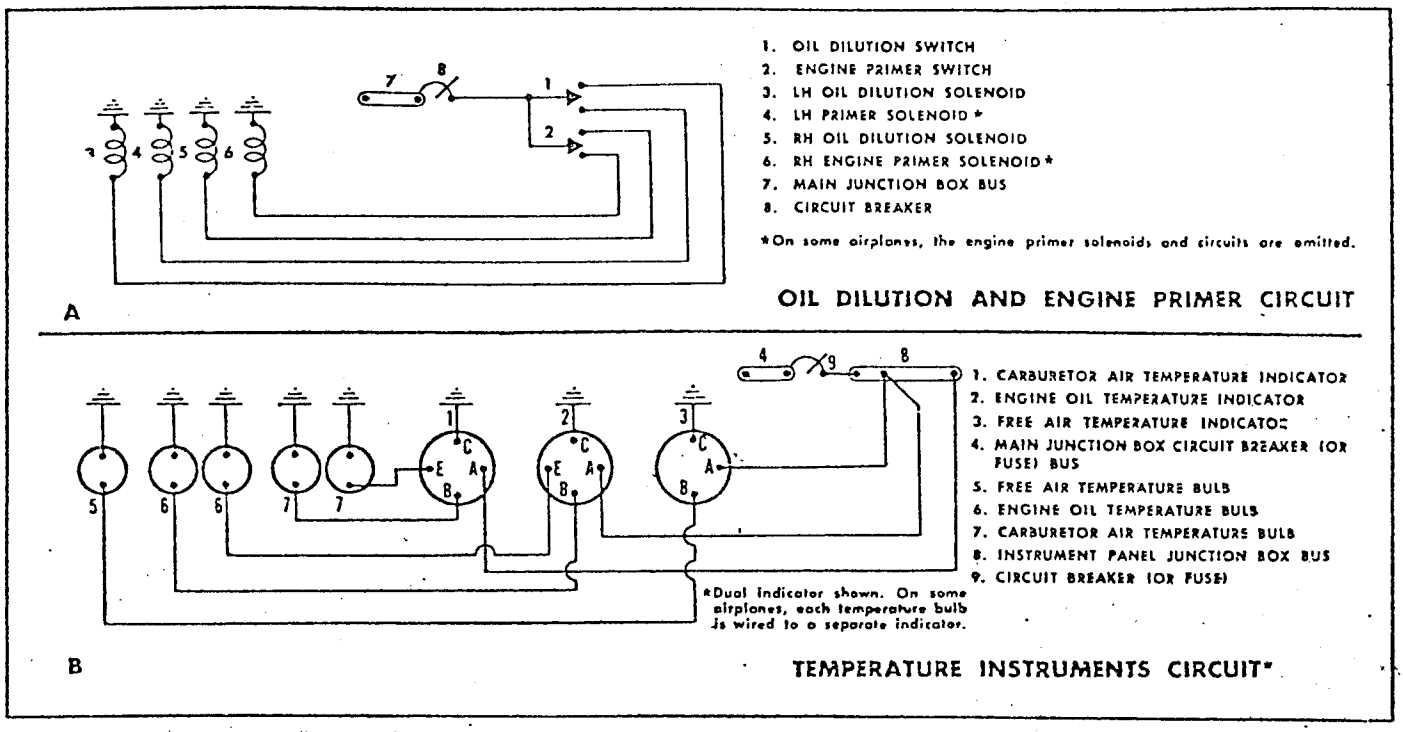

Figure 8-27. *Oil System Schematic*

33,177

c. Install the light bulbs.

d. Install the colored lens.

8-262. OIL SYSTEM CIRCUITS.

8-263. GENERAL DESCRIPTION. *(See figure 8-27.)* The oil system circuits consist of the oil temperature circuit and the oil dilution circuit. Refer to Section XII for the circuit wiring diagrams.

8-264. OIL TEMPERATURE CIRCUIT.

8-265. GENERAL DESCRIPTION. *(See figure 8-27.)* The oil temperature circuit is an integral part of the combined oil, carburetor air, and free air temperature circuit which consists of five resistance bulbs (one on the right side of each engine crankcase, one in each carburetor airscoop, and one protruding from the underside of the fuselage nose) and two dual and one single instruments mounted on the instrument panel. The circuit receives 24-volt d-c power through a 5-ampere circuit breaker located in the main junction box.

8-266. OPERATIONAL CHECKOUT OF OIL TEMPERATURE CIRCUIT.

a. Turn the master battery switch ON.

b. All indicators will assume normal position.

c. Interpolate the instrument readings relative to the estimated ambient temperature 25°C (77°F).

d. Turn the master battery switch OFF.

e. Observe the instruments. The pointers will return to the high end of scale.

8-267. TROUBLE SHOOTING OF OIL TEMPERATURE CIRCUIT. Trouble shooting procedures for the oil temperature circuit are outlined in table 8-12.

TABLE 8-12

TROUBLE SHOOTING - OIL TEMPERATURE CIRCUIT

TROUBLE	PROBABLE CAUSE	REMEDY
a. All instruments off scale high.	Circuit breaker open.	Close circuit breaker.
	Faulty wiring.	Isolate and repair.
b. One instrument off scale high.	Circuit open in bulb.	Replace bulb.
	Circuit wiring open.	Isolate and repair.
	Faulty instrument.	Replace instrument.

TABLE 8-12 (Continued)

TROUBLE	PROBABLE CAUSE	REMEDY
c. One instrument off scale low.	Short circuit in wiring.	Isolate and repair.
	Short circuit in bulb.	Replace bulb.
	Faulty instrument.	Replace instrument.
d. One instrument reads high.	Faulty bulb.	Replace bulb.
	High resistance in circuit wiring.	Isolate and repair.
	Faulty instrument.	Replace instrument.
e. One instrument reads low.	Partially shorted bulb.	Replace bulb.
	High-resistance short in circuit wiring.	Isolate and repair.
	Faulty instrument.	Replace instrument.

8-268. OIL DILUTION CIRCUIT (SOME C-47 AND C-117 AIRPLANES).

8-269. GENERAL DESCRIPTION. The oil dilution circuit consists of one spring-loaded single-pole, double-throw switch, placarded OIL DILUTION LEFT, RIGHT, mounted on the center electrical panel, to energize one solenoid valve mounted on the forward face of each firewall. The circuit receives 24-volt d-c power through a 10-ampere circuit breaker located in the main junction box.

8-270. OPERATIONAL CHECKOUT OF OIL DILUTION CIRCUIT.

a. Turn the master battery switch ON.

b. Place both mixture control levers in the IDLE CUTOFF detent.

c. Turn both fuel booster pumps ON and check the fuel pressure indicators for correct fuel pressure.

d. Momentarily turn the oil dilution switch to LEFT.

e. The left fuel pressure indicator will show a slight drop in pressure when the left oil dilution solenoid valve opens.

f. Momentarily turn the oil dilution switch to RIGHT.

g. The right fuel-pressure indicator will show a slight drop in pressure when the right oil dilution solenoid valve opens.

h. Turn off both booster pumps and turn the master battery switch OFF; leave the mixture control levers in IDLE CUTOFF.

8-271. PNEUDRAULICS CIRCUITS.

8-272. The pneudraulics circuits provide the airplane with control of the de-icing and anti-icing systems, cabin hot air heating and ventilating systems, and the fire extinguisher system. Refer to Section XII for the circuit wiring diagrams.

8-273 ANTI-ICING AND DE-ICING SYSTEMS CIRCUITS.

8-274. GENERAL DESCRIPTION. *(See figure 8-28.)* The anti-icing and de-icing systems consist of the carburetor and windshield anti-icing circuit, the propeller anti-icing pump motor and wing de-icing valve motor circuits. The anti-icing systems supply alcohol to critical surface areas to prevent formation of ice. The de-icing system removes ice formed on the leading edges of the wings, horizontal stabilizers, and vertical stabilizer.

8-275. OPERATIONAL CHECKOUT OF ANTI-ICING AND DE-ICING CIRCUITS.

8-276. TROUBLE SHOOTING OF ANTI-ICING AND DE-ICING CIRCUITS. Trouble shooting of the anti-icing and de-icing circuits is outlined in table 8-13.

TABLE 8-13
TROUBLE SHOOTING-ANTI-ICING AND DE-ICING CIRCUITS

TROUBLE	PROBABLE CAUSE	REMEDY
a. Pump motor does not operate.	Circuit breaker open.	Close circuit breaker.
	Faulty pump motor.	Replace pump motor.
	Faulty wiring.	Isolate and repair.
	Faulty switch.	Replace switch.

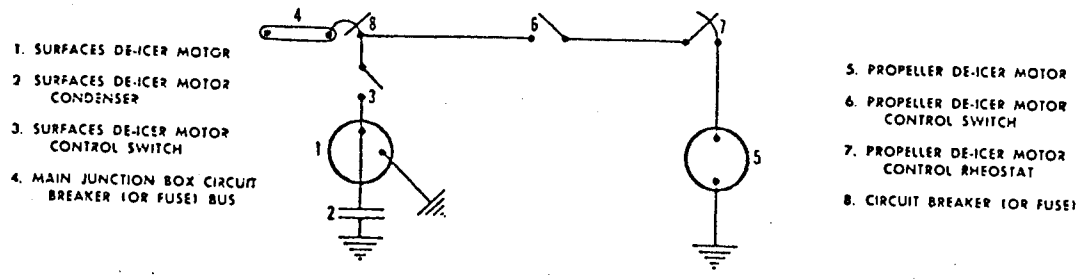

SURFACES & PROPELLER DE-ICER MOTORS CIRCUIT

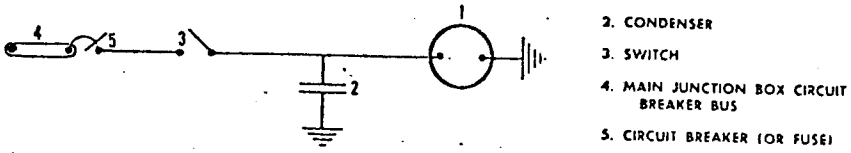

WINDSHIELD DEFROSTER BLOWER CIRCUIT (Some C-47 airplanes)

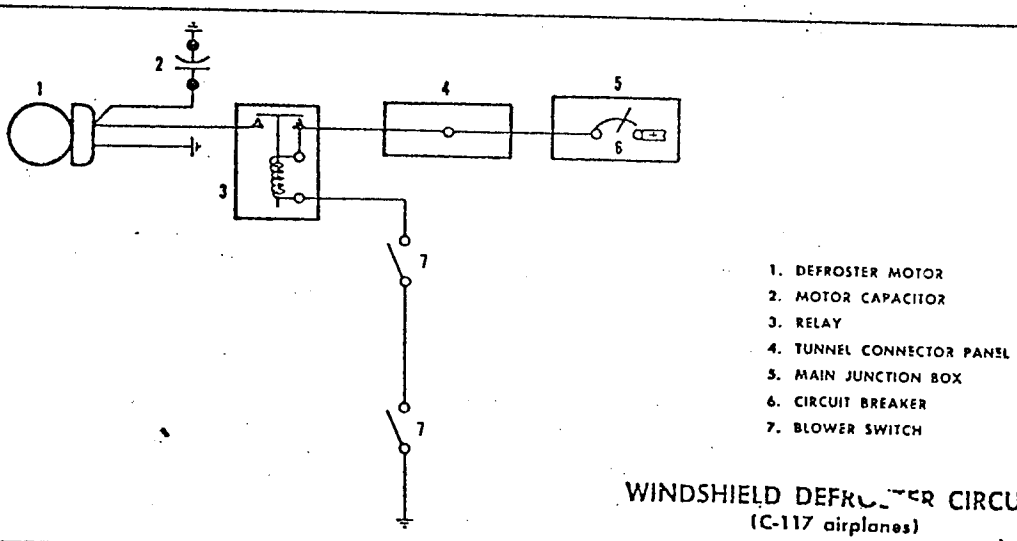

WINDSHIELD DEFROSTER CIRCUIT
(C-117 airplanes)

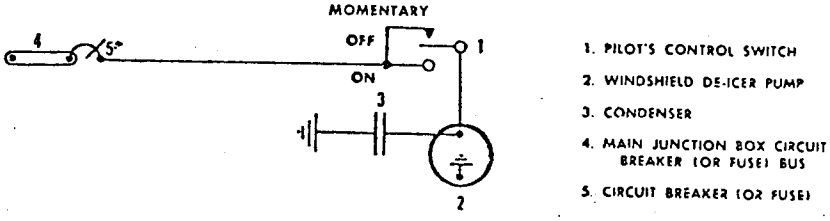

WINDSHIELD DE-ICER PUMP CIRCUIT

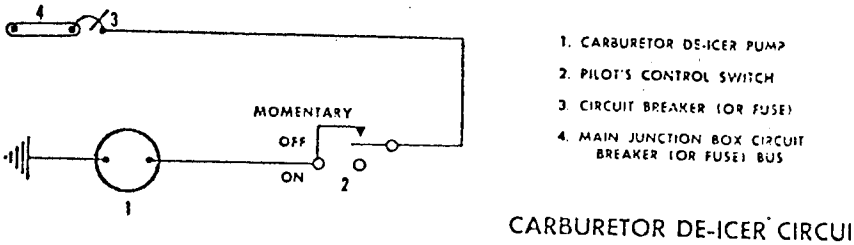

CARBURETOR DE-ICER CIRCUIT

Figure 8-28. Pneudraulics Circuits Schematic (Sheet 1 of 2)

14,353

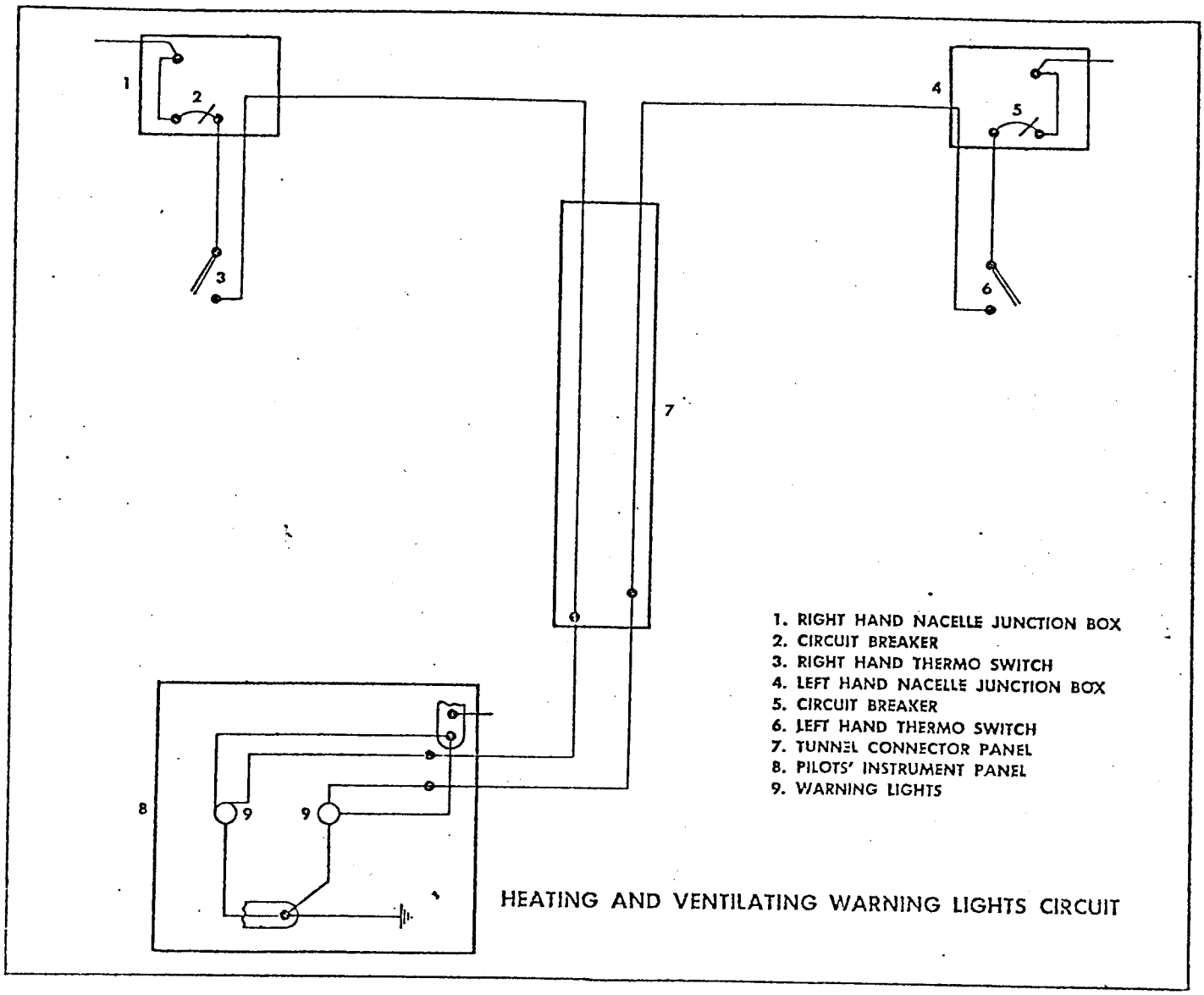

Figure 8-28. Pneudraulics Circuits Schematic (Sheet 2 of 2) 14,355

TABLE 8-13 (Continued)

TROUBLE	PROBABLE CAUSE	REMEDY
a. *(Continued)*	Faulty rheostat (propeller anti-icing pump only).	Replace rheostat.
b. Propeller pump motor runs fast regardless of rheostat position.	Faulty rheostat.	Replace rheostat.
	Faulty wiring.	Isolate and repair.

8-277. PROPELLER ANTI-ICING PUMP MOTOR CIRCUIT.

8-278. GENERAL DESCRIPTION. *(See figure 8-28.)* The propeller anti-icing circuit consists of a single-pole, single-throw switch mounted on the pilot's center electrical panel, a rheostat located adjacent to the alcohol supply tank, and the two-pole, series-wound pump motor located below the alcohol supply tank. When the control switch is turned on, the rheostat regulates the motor and the pump displacement by varying the input voltage to the motor. The circuit receives 24-volt d-c power through a 10-ampere circuit breaker located in the main junction box. Refer to Section XII for the circuit wiring diagram.

8-279. OPERATIONAL CHECKOUT OF PROPELLER ANTI-ICING PUMP MOTOR CIRCUIT.

a. Turn the master battery switch ON.

b. Turn the control switch on.

c. With the pump motor running, quickly vary the motor speed by turning the rheostat from HIGH through LOW.

d. Turn the control switch and the master battery switches to OFF.

8-280. PROPELLER ANTI-ICING PUMP MOTOR.

8-281. The propeller anti-icing pump motor is a two-pole, series-wound, explosion-proof motor. The pump section is driven by a 40:1 worm and wheel gear reduction drive. (Refer to section III.)

8-282. PROPELLER ANTI-ICING POWER RHEOSTAT. *(See figure 8-29.)*

8-283. A 50-watt, 30-ohm rheostat is secured to a bracket located on the bulkhead behind the pilot's seat. The rheostat turns clockwise from the OFF position to increase resistance, and accommodates a maximum current flow of 1.70 amperes at 24 volts dc.

8-284. REMOVAL OF PROPELLER ANTI-ICING POWER RHEOSTAT.

a. Open the circuit breaker in the main junction box.

b. Disconnect the wiring from the rheostat terminals.

c. Loosen the setscrew in the control knob and remove the knob.

d. Remove the retaining hex nut and lockwasher.

e. Remove the rheostat.

8-285. INSTALLATION OF PROPELLER ANTI-ICING POWER RHEOSTAT.

a. Align the nonturn tab of the rheostat with the drilled hole in the mounting bracket, and insert the rheostat.

b. Secure the rheostat to the mounting bracket with the lockwasher and the retaining hex nut.

c. Connect the wiring to the rheostat terminals as shown in the wiring diagram, Section XII.

d. Position the control knob on the rheostat shaft and secure by tightening the setscrew.

8-286. FLIGHT SURFACES DE-ICING VALVE MOTOR CIRCUIT.

8-287. GENERAL DESCRIPTION. *(See figure 8-28.)* A flight surface de-icing rotary distributing valve, located in the forward center wing section, is driven by a 24-volt d-c, shunt-wound motor. The rotary valve connects one de-icing port at a time to the intake air pressure and the remaining ports to the exhaust port. A complete cycle of the valve is made in approximately 40 seconds. When the de-icing control handle is turned ON, a switch in the distributor valve closes and connects the motor to the main bus through a 10-ampere circuit breaker located in the main junction box. Refer to Section XII for the circuit wiring diagram.

8-288. FLIGHT SURFACES DE-ICING VALVE MOTOR. The flight surfaces de-icing valve motor is a shunt-wound, 24-volt d-c type which drives the rotary valve through a gear reduction system. Under normal operating conditions, the motor will require a maximum of 2 amperes. (Refer to section III.)

8-289. CARBURETOR AND WINDSHIELD ANTI-ICING PUMP MOTOR CIRCUIT.

8-290. GENERAL DESCRIPTION. *(See figure 8-28.)* The carburetor and windshield anti-icing pump motor circuit consists of a single-pole, double-throw, 3-posi-

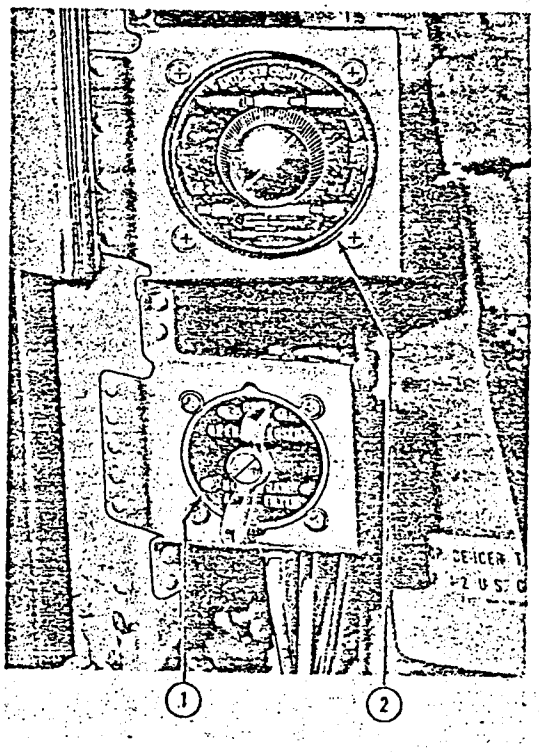

33.178

Figure 8-29. Propeller Anti-Icing Power Rheostat

Key to Figure 8-29

Item	*Nomenclature*
1.	Nonram Carburetor Air Filter Control Valve
2.	Propeller Anti-Icing Pump Motor Control Rheostat

tion carburetor anti-icer switch mounted on the right side of the pilots' upper control panel. A constant-speed motor is attached to a double outlet alcohol pump, which is located directly aft of the supply tank inside the right wing-to-fuselage fillet fairing. The control switch is placarded MOMENTARY, OFF and ON. The control switch receives 24-volt d-c power from the main bus through a 5-ampere circuit breaker located on the main junction box. Refer to Section XII for the applicable circuit wiring diagram.

8-291. OPERATIONAL CHECKOUT OF CARBURETOR AND WINDSHIELD ANTI-ICING PUMP MOTOR CIRCUIT.

a. Close the carburetor alcohol shutoff valve located at station 86 above the copilot's side window.

b. Crack open the windshield control needle valve at the bottom of the windshield vee, and close the two control valves located on either side of the flight compartment forward and below the side windows.

c. Turn the master battery switch ON.

d. Position the CARB & W/SHIELD DE-ICER switch to MOMENTARY until alcohol flows to the windshield surfaces.

e. Turn both switches off.

8-292. CARBURETOR AND WINDSHIELD ANTI-ICING PUMP MOTOR.

8-293. The carburetor and windshield anti-icing pump is driven at a constant speed by a fractional horsepower, series-wound, explosion-proof motor which normally requires 1 ampere at 27 volts dc. The motor bearings are prepacked for the service life of the motor. (Refer to section III.)

8-294. HEAT AND VENT CIRCUITS.

8-295. GENERAL DESCRIPTION. The heat and vent circuits consist of the heat and vent warning lights

TABLE 8-14
TROUBLE SHOOTING - HEAT AND VENT CIRCUITS

TROUBLE	PROBABLE CAUSE	REMEDY
a. No operation of defroster motor.	Circuit breaker open.	Close circuit breaker.
	Faulty motor.	Replace motor.
	Faulty wiring.	Isolate and repair.
	Faulty switch.	Replace switch.
b. Radio interference when defroster motor runs.	Faulty capacitor.	Replace capacitor.
	Excessive brush arcing at motor.	Replace motor.
c. Defroster motor sluggish.	Brushes sticking, worn, or arcing; high internal field resistance or open windings in armature; damaged bearings.	Replace motor.
	Resistance or poor connection in wiring.	Isolate and repair.
d. No operation of pitot heater.	Open circuit breaker.	Close circuit breaker.
	Open heater element.	Replace pitot head.
	Faulty wiring.	Isolate and repair.
	Faulty switch.	Replace switch.
e. No press-to-test of heat and vent warning light.	Faulty light bulb.	Replace light bulb.
	Faulty wiring.	Isolate and repair.
f. No operation of same light at both stations; press-to-test satisfactory.	Burned fuse.	Replace fuse.
	Faulty thermoswitch.	Replace thermoswitch.

TABLE 8-14 (Continued)

TROUBLE	PROBABLE CAUSE	REMEDY
f. (Continued)	Open wiring from nacelle junction box to terminal strip in tunnel.	Isolate and repair.
g. No operation of one light; press-to-test satisfactory.	Open wiring from tunnel terminal strip to light.	Isolate and repair.

circuit, the windshield defroster circuit, and the pitot heater circuit. The heat and vent circuits use cooling air, or electrical element heating suitably controlled. Refer to Section XII for the circuit wiring diagrams.

8-296. OPERATIONAL CHECKOUT OF HEAT AND VENT CIRCUITS.

8-297. TROUBLE SHOOTING OF HEAT AND VENT CIRCUITS. The trouble shooting procedures for the heat and vent circuits are outlined in table 8-14.

8-298. WINDSHIELD DEFROSTER CIRCUIT.

8-299. GENERAL DESCRIPTION. *(See figure 8-28.)* On C-47 airplanes, the windshield defroster circuit consists of a blower motor, installed in the navigator's compartment above the dome light, one spring-loaded single-pole, double-throw control switch, located on the heating and ventilating defrosting valve in the aft section of the navigator's compartment, and a capacitor. When the defrost valve control is placed in the EMERGENCY DEFROST position, a pin actuates the switch connecting the blower motor to 24-volt d-c power through a 20-ampere circuit breaker located in the main junction box.

8-300. On C-117 airplanes, the blower motor, located aft of the bulkhead behind the co-pilot's seat, receives power through a control relay controlled by two spring-loaded single-pole, single-throw switches connected in series. The control relay is secured to the bulkhead below the blower motor, and is energized when the HOT AIR control valve is placed in the MAX. DEFROST position, and the defrosting valve control in the EMERGENCY DEFROST BLOWER ON position.

8-301. OPERATIONAL CHECKOUT OF WINDSHIELD DEFROSTER CIRCUIT.

a. Turn the master battery switch ON.

b. Turn the defrosting valve control to EMERGENCY DEFROST.

c. Check for airflow at the windshield.

d. Turn the control and master battery switch OFF.

8-302. WINDSHIELD DEFROSTER BLOWER MOTOR.

8-303. The windshield defroster blower is driven by a ¼-horsepower, 24-volt d-c motor operating at approximately 9800 rpm. The motor is attached to the blower with screws and nuts. (Refer to section III.)

8-304. WINDSHIELD DEFROSTER BLOWER MOTOR CONTROL RELAY.

8-305. The windshield defroster blower motor is controlled by a 24-volt d-c, continuous-duty relay with a rated current capacity of 40 amperes at 29 volts, and actuated by a 110-ohm coil requiring 0.218 amperes at 24 volts.

8-306. REMOVAL OF WINDSHIELD DEFROSTER BLOWER MOTOR CONTROL RELAY.

a. Open the circuit breaker in the main junction box.

b. Disconnect the wiring from the relay terminals.

c. Remove the mounting hardware securing the relay to the bulkhead and remove the relay.

8-307. INSTALLATION OF WINDSHIELD DEFROSTER BLOWER MOTOR CONTROL RELAY.

a. Position the relay on the bulkhead and secure it with the mounting hardware.

b. Connect the electrical wiring to the relay as shown in the wiring diagram, Section XII.

8-308. HEAT AND VENT WARNING LIGHTS CIRCUIT.

8-309. GENERAL DESCRIPTION. *(See figure 8-28.)* On C-47 airplanes, two light assemblies are located on the right side of the instrument panel, and two light assemblies are located on the aft bulkhead of the radio operator's compartment. On C-117 airplanes, all four light assemblies are located on the instrument panel. The light assemblies are controlled by a thermoswitch, installed in the heat and vent system air inlet piping of each wing, on the outboard side of each nacelle. The left and right nacelle warning lights are individual circuits connected to 24-volt d-c power through a 15-ampere fuse, on C-47 airplanes, or a 5-ampere circuit breaker, on C-117 airplanes, to the power side of the landing light relay located in each nacelle junction box. When the air temperature in the inlet piping

rises to 232°C (450°F), the thermoswitch closes the warning light circuit, and the lights for that wing system illuminate; thus, both of the pilots, and the radio operator on C-47 airplanes, are alerted when to open the spill valve. Refer to Section XII for the circuit wiring diagram.

8-310. OPERATIONAL CHECKOUT OF HEAT AND VENT WARNING LIGHTS CIRCUIT. "Press-to-test" operation of the warning lights is the only checkout procedure practical under normal conditions.

8-311. REMOVAL AND INSTALLATION OF COMPONENTS OF HEAT AND VENT WARNING LIGHTS CIRCUIT.

8-312. HEAT AND VENT WARNING LIGHTS CIRCUIT THERMOSWITCH.

8-313. The heat and vent thermoswitches are thermal-sensitive elements which close the warning lights circuit whenever the cabin heating inlet temperature becomes critical.

8-314. REMOVAL OF HEAT AND VENT WARNING LIGHTS CIRCUIT THERMOSWITCH.

a. Open the circuit breaker, or remove the fuse, connecting the circuit to power in the nacelle junction box.

b. Disconnect the wiring from the thermoswitch.

c. Remove the attaching screws securing the thermoswitch to the duct, and remove the thermoswitch.

8-315. INSTALLATION OF HEAT AND VENT WARNING LIGHTS CIRCUIT THERMOSWITCH.

a. Position the thermoswitch in the duct and secure with the attaching hardware.

b. Connect the electrical wiring to the thermoswitch as shown in the wiring diagram, Section XII

8-316. FIRE EXTINGUISHER CIRCUIT.

8-317. GENERAL DESCRIPTION. A bromochloromethane (CB) fire extinguishing system consists of a container assembly, which is fitted with an explosive initiating charge, located in each nacelle; and two control switches (one for each circuit), which are located in the fire extinguisher control box installed at the floor between the pilots' seats. The engine fire extinguishing system is discharged by operating the appropriate switch to energize the explosive cartridge in the container from 24-volt d-c power through one of two circuit breakers located in the main junction box. The two circuit breakers are wired to the battery side of the battery connector relay. Refer to Section XII for the circuit wiring diagram.

8-318. OPERATIONAL CHECKOUT OF FIRE EXTINGUISHER CIRCUIT. There is no practical operational checkout procedure for the fire extinguisher circuit; therefore, before conducting any engine-run checks, or before flight, always make a visual inspection of the circuit wiring. If any question as to circuit readiness exists, perform a functional test as outlined in paragraph 8-324.

8-319. REMOVAL AND INSTALLATION OF COMPONENTS OF FIRE EXTINGUISHER CIRCUIT.

8-320. FIRE EXTINGUISHER CARTRIDGE.

8-321. The fire extinguisher system is initiated by an explosive cartridge, installed in the bonnet of the container assembly, and is detonated by an electrical current flow in excess of 1 ampere.

8-322. REMOVAL OF FIRE EXTINGUISHER CARTRIDGE.

a. Open the circuit breaker in the main junction box.

b. Disconnect the electrical wiring from the bonnet terminals.

c. Disconnect the system piping from the container.

d. Loosen the bonnet retaining nut with a strap wrench and remove the bonnet.

e. Remove the cartridge from the bonnet.

8-323. INSTALLATION OF FIRE EXTINGUISHER CARTRIDGE.

a. Install the cartridge in the bonnet so that the cartridge makes positive contact with the firing pin. Torque the cartridge from 150 to 200 inch-pounds. The cartridge nut will bottom on the valve shoulder.

b. Position the bonnet on the container and tighten the retaining nut fingertight.

c. Rotate the bonnet to align the system piping with the ports, and connect the piping.

d. Tighten the valve retaining nut and torque to approximately 75 foot-pounds with a strap wrench.

e. Connect the electrical wiring to the bonnet terminals as shown in the wiring diagram, Section XII.

8-324. FUNCTIONAL TEST OF FIRE EXTINGUISHER CIRCUIT.

a. Disconnect the wiring from the positive terminal (6-32 screw).

b. Check the cartridge continuity with a test ohm-

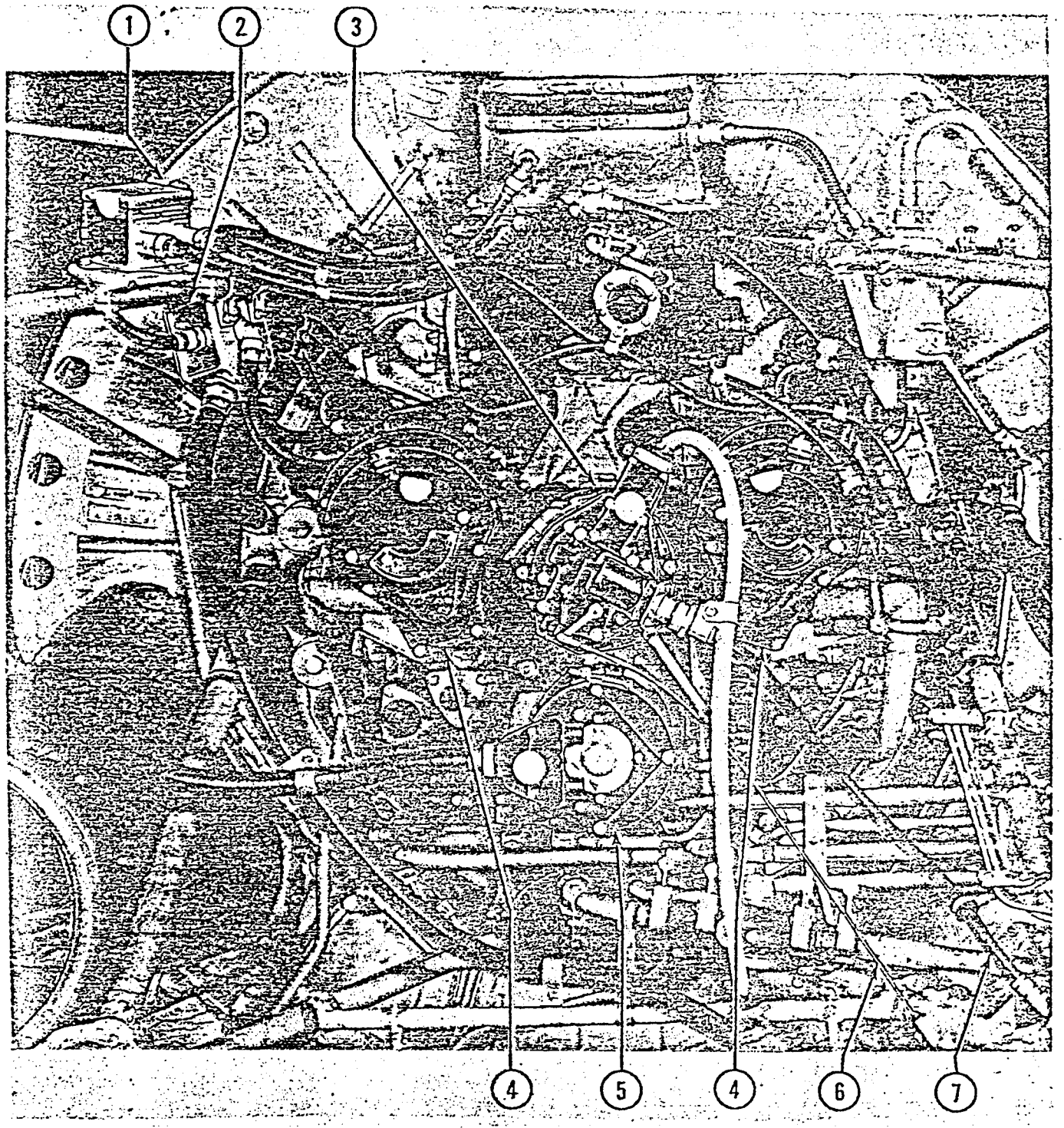

33,179

Figure 8-30. Power Plant Electrical Components

Key to Figure 8-30

Item	*Nomenclature*
1.	Induction Vibrator
2.	Engine Section Pull Box
3.	Engine Starter
4.	Magneto
5.	Generator
6.	Starter Manual Meshing Cable
7.	Starter Hand Crank Flexible Shaft

meter. Touch one lead to the terminal post and the other to ground. Replace the cartridge if the resistance indicated is greater than 1 ohm.

WARNING

Do not check the cartridge continuity unless the cartridge and bonnet are properly installed on the container. Explosion of the

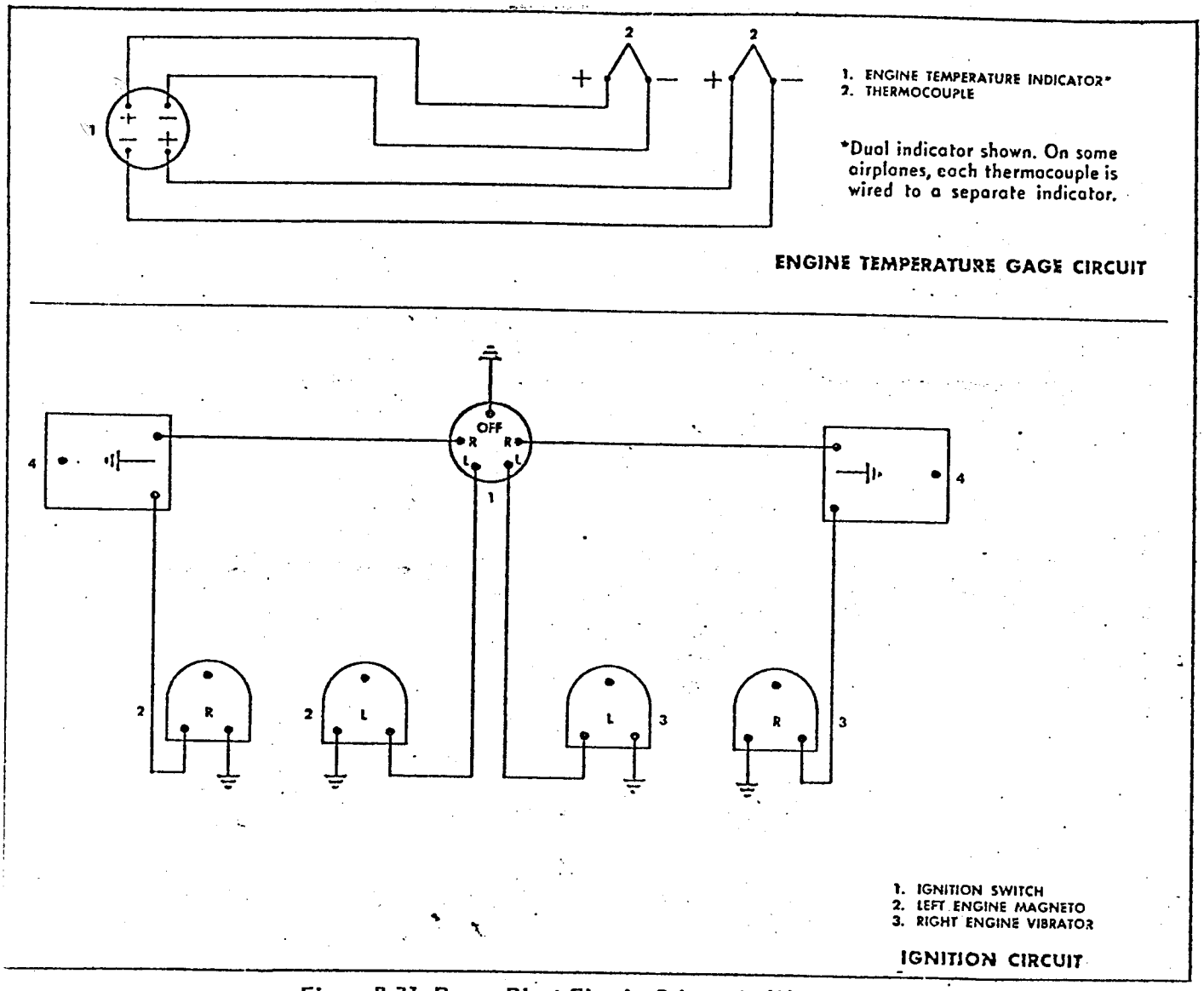

Figure 8-31. Power Plant Circuits Schematic (Sheet 1 of 2)

15.079

cartridge can kill or injure personnel. The test ohmmeter must limit the current flow to less than 1 ampere. Current flow greater than 1 ampere can detonate the cartridge.

c. Connect one lead of a d-c voltmeter to the positive side and the other lead to ground.

d. Actuate the discharge switch. The voltmeter will indicate approximately 24 volts with the aircraft batteries installed.

e. Turn the switches off and connect the wiring to the bonnet terminal.

8-325. POWER PLANT CIRCUITS.

8-326. GENERAL DESCRIPTION. *(See figure 8-31.)* The power plant circuits consist of the ignition system, starting system, propeller feathering circuit, engine primer circuit, carburetor air temperature circuit, engine tachometer circuit, and the ram-nonram air induction circuit. Refer to Section XII for the affected circuit wiring diagrams.

8-327. IGNITION SYSTEM.

8-328. GENERAL DESCRIPTION. *(See figure 8-31.)* The ignition system consists of an induction vibrator, two magnetos, ignition harness, and 28 spark plugs for each engine controlled by a dual ignition switch. Except for the induction vibrator, the ignition system is completely self-contained, requiring no power from the airplane's electrical distribution system, and is isolated from all other circuits by conduit and shielding. In the dual ignition system on each engine, the left magneto fires the rear spark plugs on both banks of cylinders, and the right magneto the front spark plugs. The two synchronized magnetos generate the high voltage supplied through two distributors and the harness assemblies to the spark plugs. The induction vibrator converts 24-volt d-c power, from the main bus, to pulsating dc, and is then boosted and distributed by the magneto. Refer to Section XII for the system wiring diagram.

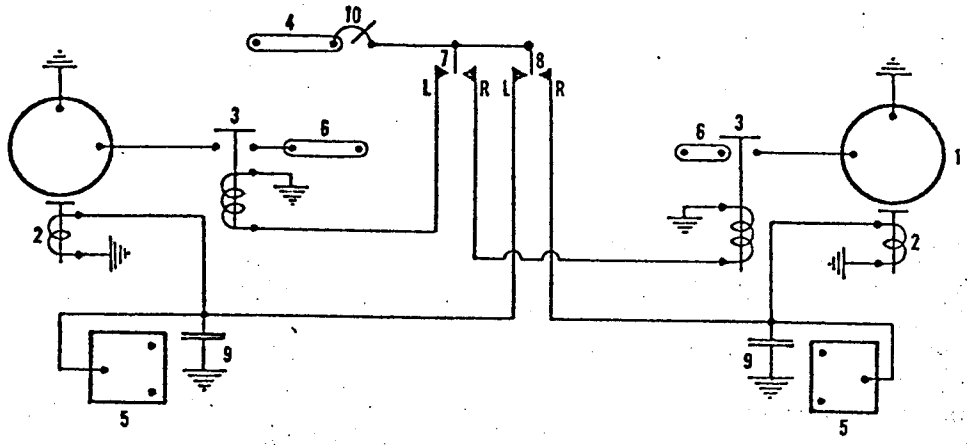

1. STARTER MOTOR
2. STARTER MESHING SOLENOID
3. STARTER RELAY
4. MAIN JUNCTION BOX CIRCUIT BREAKER (OR FUSE) BUS
5. INDUCTION VIBRATOR
6. FIREWALL JUNCTION BOX BUS BAR
7. "ENERGIZE" STARTER SWITCH
8. "MESH" STARTER SWITCH
9. CONDENSER
10. CIRCUIT BREAKER

STARTER CIRCUIT

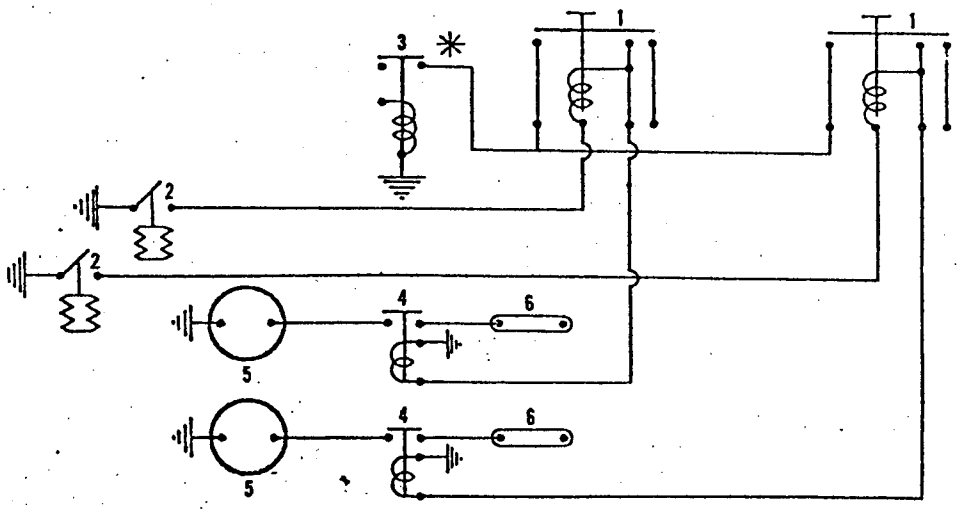

1. PROPELLER FEATHERING SWITCH
2. PRESSURE CUT-OUT SWITCH
3. BATTERY CONNECTOR RELAY
4. PROPELLER FEATHERING RELAY
5. PROPELLER FEATHERING PUMP MOTOR
6. FIREWALL JUNCTION BOX BUS

*On some airplanes, this circuit is connected to the main junction box fuse panel through a fuse.

PROPELLER FEATHERING CIRCUIT

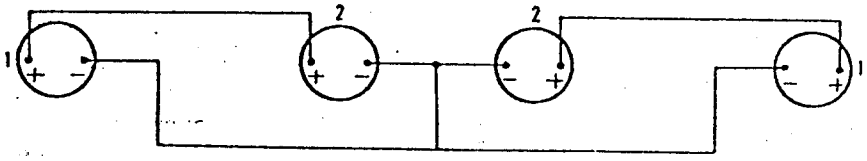

1. TACHOMETER MAGNETO
2 TACHOMETER

TACHOMETER CIRCUIT (Single Indicators)
(Some C-47 airplanes)

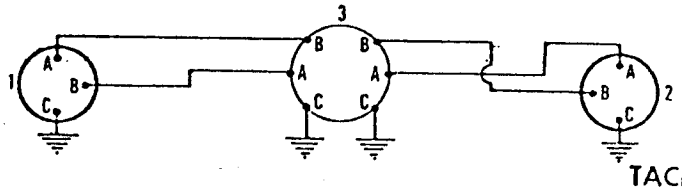

1 L.H. ENGINE TACHOMETER GENERATOR
2. R.H. ENGINE TACHOMETER GENERATOR
3 TACHOMETER (DUAL)

TACHOMETER CIRCUIT (Dual Indicator)

Figure 8-31. Power Plant Circuits Schematic (Sheet 2 of 2)

33,180

8-329. REMOVAL AND INSTALLATION OF COMPONENTS OF IGNITION SYSTEM.

8-330. IGNITION SWITCHES.

8-331. One of three types (A2A-10, B-5, or B-6) of dual ignition switches is installed in the flight compartment above the windshield vee. The switch assembly incorporates a master ON-OFF switch and two individual engine switches placarded OFF-L-R-BOTH. When the master switch is OFF, all four magnetos are grounded; when the master switch is ON, each magneto is controlled by the individual engine switch. When the individual switch is OFF, both magnetos on one engine are grounded. When the switch is at R, the left magneto is grounded and the engine operates on the front spark plugs only. When the switch is at L, the right magneto is grounded and the engine operates on the rear spark plugs only. When the switch is at BOTH, neither magneto is grounded and, therefore, all spark plugs operate.

8-332. REMOVAL OF IGNITION SWITCH.

WARNING

The magnetos are operative even though the master switch is positioned OFF or completely removed; therefore, step a must be accomplished before removing the switch assembly.

a. Disconnect the ignition harness connectors at all four magnetos.

b. Turn the master battery switch OFF.

c. Dismount the left electrical panel to gain access to the switch.

d. Remove the screws securing the switch to the support structure.

e. Move the switch into the electrical panel cavity and disconnect the electrical wiring.

f. Remove the switch.

8-333. TEST OF IGNITION SWITCH BEFORE INSTALLATION.

a. Connect one continuity test light (or ohmmeter) across both L terminals; connect a second test light across both R terminals.

b. Test each engine switch in accordance with table 8-15.

Note

When the light is on, the corresponding magneto is grounded and therefore inoperative.

c. Repeat the preceding test for the other switch.

8-334. INSTALLATION OF IGNITION SWITCH.

a. Connect the electrical wiring to the switch terminals as shown in the wiring diagram, Section XII.

b. Position the switch on the support structure and secure with the attaching screws.

c. Install and secure the left electrical panel.

TABLE 8-15
TESTING EACH ENGINE IGNITION SWITCH

Switch Position		*Lights*	
Master	*Engine*	*R*	*L*
ON	BOTH	OFF	OFF
ON	L	ON	OFF
ON	R	OFF	ON
ON	OFF	ON	ON
OFF	BOTH	ON	ON

8-335. STARTING SYSTEM.

8-336. **GENERAL DESCRIPTION.** *(See Figure 8-31.)* An electric inertia, direct-cranking starter is mounted directly on each engine accessory drive case. Each starter is controlled by a relay, located in each firewall junction box, and two control switches installed on the pilot's center electrical panel. The starter drive jaw is actuated by a solenoid attached to the starter. Each starter is provided with a manual meshing cable and handle to be used in case of solenoid failure. Each starter has a handcrank drive extension for use when the starter drive motor fails. The two spring-loaded switches are placarded ENERGIZE LEFT—RIGHT and MESH LEFT—RIGHT; the LEFT for the up position and RIGHT for the down position. When the ENERGIZE switch is closed, the control relay connects the starter drive motor to the main bus in the firewall junction box. When the MESH switch is closed, the meshing solenoid extends the starter drive jaw until the jaw engages the engine; at the same time, power is supplied to the induction vibrator to aid in starting the engine. Both control switches receive 24-volt d-c power through a 15-ampere fuse and, on some airplanes, the switches connect directly to the battery connector relay. Refer to Section XII for the starter system wiring diagram.

8-337. OPERATIONAL CHECKOUT OF STARTER SYSTEM.

a. Connect external power to the airplane, or if external power is not available, turn the master battery switch ON.

b. Before proceeding, clear the area around the propellers of personnel or equipment.

c. Close the starter ENERGIZE switch. The starter motor will operate with a steady increase in speed.

d. Close the MESH switch before the starter has been energized 20 seconds, while continuing to hold the ENERGIZE switch closed. The starter will engage the engine and turn the propeller.

8-338. TROUBLE SHOOTING OF STARTER SYSTEM.

Trouble shooting procedures for the starter system are outlined in table 8-16.

TABLE 8-16
TROUBLE SHOOTING - STARTER SYSTEM

TROUBLE	PROBABLE CAUSE	REMEDY
a. Hand cranking difficult.	Defective starter.	Replace starter.
b. Starter fails to operate or turns slowly.	Faulty wiring (loose, grounded, or shorted connections, etc).	Isolate and repair.
	Brushes binding in holder.	Free brushes.
	Worn brushes.	Replace brushes if commutator not damaged. Replace starter if commutator damaged.
	Dirty, rough, or burned commutator. Motor shorted or grounded. Clutch slipping.	Replace starter.
	Supply voltage low.	Recharge airplane batteries, or adjust external power.
	Faulty ENERGIZE switch.	Replace switch.
	Faulty relay.	Replace relay.
c. Starter does not engage.	Faulty wiring.	Isolate and repair.
	Defective solenoid or drive jaw linkage.	Replace starter.
	Faulty MESH switch.	Replace switch.
d. Relay fails to operate.	Faulty circuit wiring.	Isolate and repair.
	Faulty relay.	Replace relay.
e. Induction vibrator inoperative.	Circuit wiring faulty.	Isolate and repair.
	Faulty vibrator.	Replace vibrator.

8-339. REPLACEMENT OF STARTER BRUSHES. Replace the starter brushes when worn shorter than 5/32 inch, to insure proper operation of the starter between inspection periods. Replace worn brushes immediately, as they can cause burning of the commutator and insulation.

a. Release the four slide locks and remove the two brush cover bands.

b. Disconnect the brush leads from the brush rigging.

c. Raise the brush-retaining spring and remove the brush.

d. If the commutator is dirty or slightly rough, smooth with No. 0000 sandpaper.

e. Wrap a strip of No. 0000 sandpaper, grit-side up, around the commutator. Insert the brushes and position the springs on the brushes. Pull the sandpaper out in the direction of normal rotation. Repeat this operation until the new brushes are seated (a minimum of 75 per cent of the surface area of the brush contacts the commutator).

f. Blow all dust from the starter with clean, dry, compressed air.

g. With the brushes inserted and the retaining springs in place, check the tension of each brush-retaining spring at the point where the spring joins the top of the new brush. Replace the spring if the tension is not 24 to 28 ounces.

h. Connect the brush leads to the brush rigging.

i. Install the two brush cover bands.

8-340. STARTER RELAY.

8-341. A Type B-8 starter relay, installed in the firewall junction box of each nacelle, connects the starter

TABLE 8-17

TROUBLE SHOOTING - PROPELLER FEATHERING CIRCUIT

TROUBLE	PROBABLE CAUSE	REMEDY
a. Propeller fails to feather.	Faulty pump motor.	Replace pump assembly.
	Sheared pump coupling.	Replace pump assembly.
	Restricted oil supply to pump.	Check pump inlet for obstruction; bleed piping.
	Faulty relay.	Replace relay.
	Faulty wiring.	Isolate and repair.
	Faulty switch.	Replace switch.
b. Switch holding coil inoperative when feathering.	Open wire from control switch to pressure cutout switch.	Isolate and repair.
	Pressure cutout switch setting low.	Replace pressure switch.

motor to the main bus when the ENERGIZE switch is closed.

8-342. REMOVAL OF STARTER RELAY.

a. Lower the batteries and placard the external power receptacle as inoperative.

b. Remove the firewall junction box cover.

c. Disconnect the electrical wiring and bus bar from the relay.

d. Remove the mounting screws and the relay.

8-343. INSTALLATION OF STARTER RELAY.

a. Position the relay in the firewall junction box.

b. Connect the electrical wiring and bus bar to the relay terminals as described in the wiring diagram, Section XII.

c. Install the firewall junction box cover.

d. Restore electrical power to the airplane.

8-344. PROPELLER FEATHERING CIRCUIT.

8-345. GENERAL DESCRIPTION. *(See figure 8-31.)* The propeller feathering circuit consists of two separate circuits. Each circuit contains an electric motor-driven pump, a control relay, a control switch, and a pressure cutout switch, installed in the propeller governor. When the feathering control switch is closed, the control relay connects the pump motor to the 24-volt d-c main bus in the firewall junction box. At the same time, a holding coil in the switch is grounded and holds the switch closed until the propeller reaches the end of feathering travel, causing the pressure to build up sufficiently to open the pressure cutout switch and deenergize the holding coil. When the switch opens, the motor and relay are deenergized. Since greater oil pressure is required to unfeather the propeller, the pressure cutout switch remains open; therefore, the control switch must be held closed to unfeather the propeller. Due to the extreme importance of the propeller feathering circuit, no circuit protective devices are provided on most airplanes. Refer to Section XII for the circuit wiring diagram.

8-346. OPERATIONAL CHECKOUT OF PROPELLER FEATHERING CIRCUIT. With the engines running at 1700 rpm, depress the feathering control switch. After the engine rpm has dropped to approximately 1500 rpm, manually open the feathering control switch. Repeat this procedure for the other engine.

CAUTION

To avoid overloading the engine sump, *do not* repeat the feathering check until the engine has operated for a period of at least 2 minutes at 1000 rpm.

8-347. TROUBLE SHOOTING OF PROPELLER FEATHERING CIRCUIT. The trouble shooting procedures for the propeller feathering circuit are outlined in table 8-17.

8-348. PROPELLER FEATHERING SWITCH. *(See figure 8-32.)*

8-349. Two pushbutton propeller feathering switches, one for each circuit, are mounted on the pilot's center

electrical panel. The switch, in conjunction with the control relay and pressure cutout switch, controls the propeller feathering motor. When the switch is closed, the control relay and the switch holding coil are energized. The holding coil is grounded through the pressure cutout switch; therefore, when the pressure cutout switch opens, the holding coil is deenergized and the switch opens.

8-350. REMOVAL OF PROPELLER FEATHERING SWITCH.

a. Lower the batteries and placard the external power receptacle as inoperative.

b. Remove the screws securing the center electrical panel to the support structure, and dismount the panel.

c. Disconnect the electrical wiring from the switch terminals.

d. Remove the knob from the switch plunger by removing the attaching screw.

e. Remove the retaining nut, lockwasher, and the switch from the panel.

8-351. MAINTENANCE AND ADJUSTMENT OF PROPELLER FEATHERING SWITCH. If the switch contacts are out of alignment, adjust by carefully bending them. If the shaft and contact pin bind or stick, lubricate with a few drops of oil, Specification MIL-L-7870A. Replace the switch if any other defects exist.

8-352. INSTALLATION OF PROPELLER FEATHERING SWITCH.

a. Position the switch assembly in the panel and secure it with the retaining nut and lockwasher.

b. Install the knob and secure with the attaching screw.

c. Connect the electrical wiring as shown in the wiring diagram, Section XII.

d. Install the center electrical panel.

e. Restore electrical power to the airplane.

8-353. PROPELLER FEATHERING RELAY.

8-354. A 24-volt d-c, type B-8 propeller feathering control relay is installed in the firewall junction box of each nacelle. The relay is energized by the feathering switch, and connects the feathering pump motor to the main bus in the firewall junction box.

8-355. REMOVAL OF PROPELLER FEATHERING RELAY.

a. Lower the batteries and placard the external power receptacle as inoperative.

b. Remove the cover from the firewall junction box.

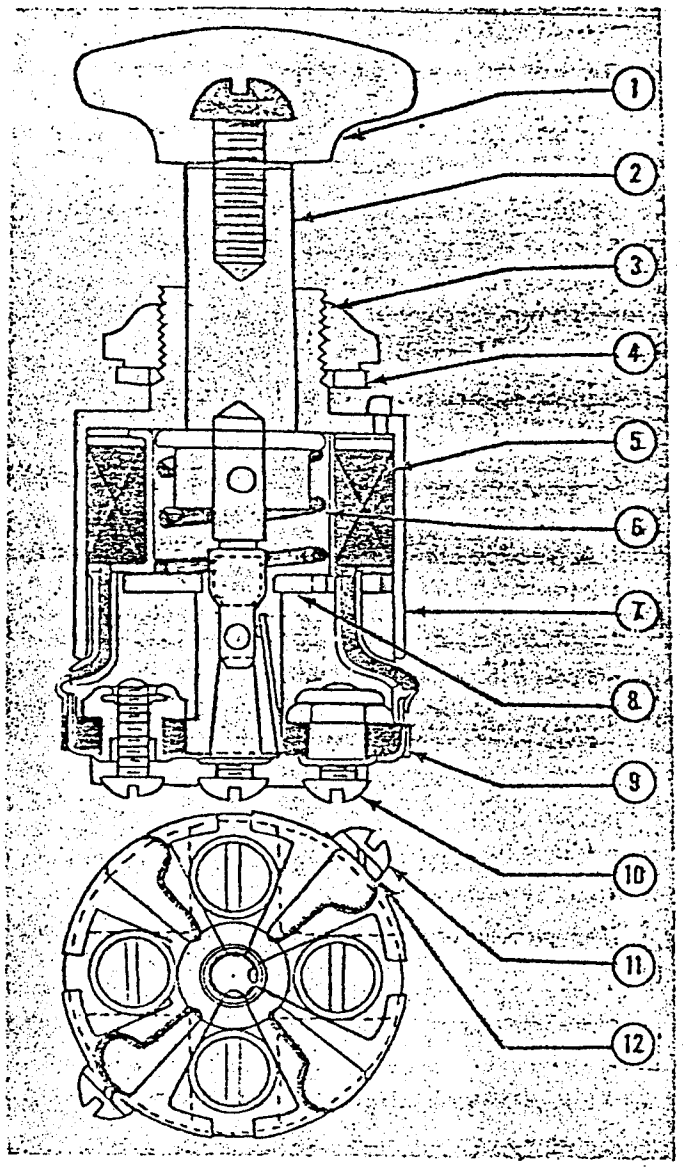

14,349

Figure 8-32. Propeller Feathering Switch

Key to Figure 8-32

Item	*Nomenclature*
1.	Pushbutton
2.	Contact Pin Shaft
3.	Retaining Nut
4.	Lockwasher
5.	Holding Coil
6.	Compression Ring
7.	Shell
8.	Spring Seat
9.	Brush Holder
10.	Terminal Screw
11.	Brush Holder Screw
12.	Lockwasher

c. Disconnect the electrical wiring from the relay terminals.

d. Remove the mounting screws and the relay.

8-356. INSTALLATION OF PROPELLER FEATHERING RELAY.

a. Position the relay and secure with the mounting screws.

b. Connect the electrical wiring as shown in the wiring diagram, Section XII.

c. Install the firewall junction box cover.

d. Restore electrical power to the airplane.

8-357. PROPELLER FEATHERING PRESSURE CUTOUT SWITCH.

8-358. A pressure cutout switch is attached to the base of each propeller governor. The switch is normally a closed-limit switch which opens when the oil pressure in the governor exceeds 400 psi, thereby opening the holding coil circuit of the feathering switch.

8-359. REMOVAL OF PROPELLER FEATHERING PRESSURE CUTOUT SWITCH.

a. Disconnect the electrical connector.

b. Remove the screws attaching the switch unit to the propeller governor base.

c. Remove the switch unit.

8-360. INSTALLATION OF PROPELLER FEATHERING PRESSURE CUTOUT SWITCH.

a. Position the switch unit on the governor base.

b. Secure the switch unit with the attaching screws.

c. Connect the electrical connector.

8-361. FUNCTIONAL TEST OF PROPELLER FEATHERING CIRCUIT. Perform the following functional test only after an engine run of sufficient duration to heat the oil system to normal operating temperature.

Note

The engine sump drain plug must be removed to prevent oil from the propeller collecting in the engine sump during the feathering cycle.

a. Immediately after stopping the engine, position a waste oil container beneath the engine sump drain and remove the drain plug.

b. Connect an external power source to the airplane with the master battery switch OFF.

c. Close the feathering control switch. The holding coil will hold the switch closed.

d. When the propeller reaches the fully feathered position, the holding coil will release the switch and the feathering pump will stop.

e. To unfeather the propeller, hold the feathering switch closed until the propeller reaches a normal cruise pitch.

f. Remove the external power and install the engine sump drain plug.

8-362. ENGINE PRIMER CIRCUIT.

8-363. GENERAL DESCRIPTION. The engine primer circuit consists of a spring-loaded, single-pole, double-throw switch placarded ENGINE PRIMER LEFT—RIGHT. The switch, installed on the pilot's center electrical panel, controls a solenoid valve mounted on the forward side of each nacelle firewall. The circuit receives 24-volt d-c power through a 10-ampere circuit breaker located in the main junction box and placarded ENG. PRIM & OIL DILUTION SOLENOIDS. When energized, the engine primer solenoid valve diverts fuel from the fuel pressure pipe to the primer distributor spider, bypassing the carburetor metering section. For the circuit wiring diagram, see Section XII.

8-364. OPERATIONAL CHECKOUT OF ENGINE PRIMER CIRCUIT.

a. Turn the master battery switch ON.

b. Place both engine mixture control levers in the IDLE CUTOFF detent.

c. Turn the fuel system selector valve ON.

d. Turn both fuel booster pumps ON. Check the fuel pressure indicators for the normal system pressure of approximately 17 psi.

e. Momentarily place the engine primer switch to LEFT (up).

f. The left fuel pressure indicator will show a slight drop in system pressure when the left engine primer solenoid valve opens.

g. Repeat steps e and f for the right engine primer checkout.

8-365. RAM-NONRAM AIR INDUCTION SYSTEM (SOME C-47 AIRPLANES).

8-366. GENERAL DESCRIPTION. An electric motor and switch assembly actuates the carburetor ram-nonram filtered air induction system. This motor, installed inside the engine accessory cowling adjacent to the carburetor airscoop, operates two doors by means of rod linkage, cables, and cams, and is controlled by two 5-position selector switches located on the left side panel of the flight compartment below the windshield. For details of the ram-nonram air induction system, refer to Section IV.

8-367. FUEL SYSTEM CIRCUITS.

8-368. GENERAL DESCRIPTION. The fuel system

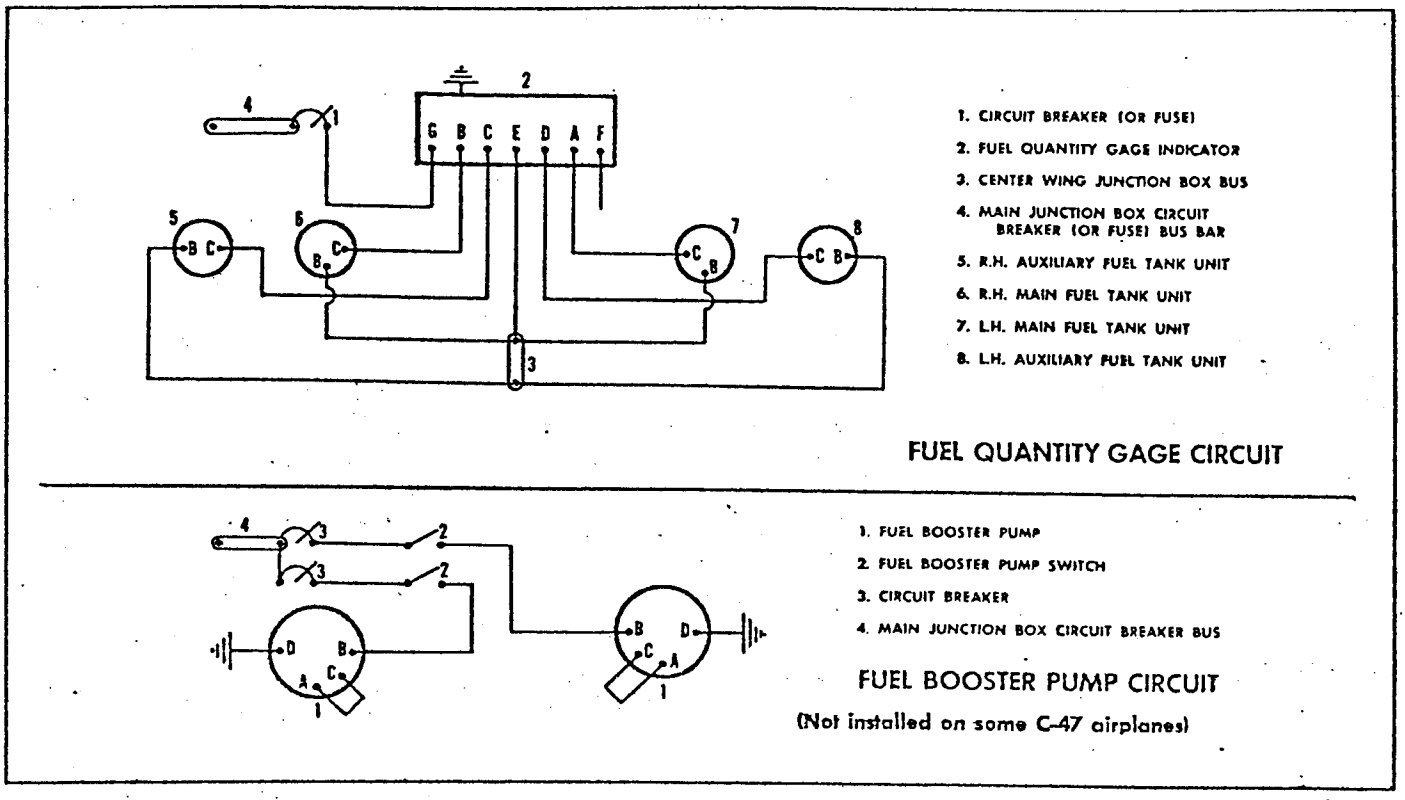

Figure 8-33. Fuel Circuits Schematic

33,187

circuits consist of the fuel quantity circuit and the fuel booster pump circuit.

8-369. FUEL QUANTITY CIRCUIT.

8-370. GENERAL DESCRIPTION. *(See figure 8-33.)* A 24-volt d-c fuel quantity indicator, installed on the right side of the instrument panel, is positioned by one of four variable-resistance tank units (one installed in each fuel tank). The circuit receives power through a 5-ampere circuit breaker located in the main junction box. Refer to Section XII for the fuel quantity circuit wiring diagram.

8-371. OPERATIONAL CHECKOUT OF FUEL QUANTITY CIRCUIT.

a. Turn the master battery switch ON.

b. Turn the tank selector switch to each of the four positions, and compare the indicator reading with the dipstick reading for each tank.

c. Turn the master battery switch OFF.

8-372. TROUBLE SHOOTING OF FUEL QUANTITY CIRCUIT. Trouble shooting procedures for the fuel quantity circuit are outlined in table 8-18.

8-373. REMOVAL AND INSTALLATION OF COMPONENTS OF FUEL QUANTITY CIRCUIT. Removal and installation procedures of the fuel quantity circuit components are outlined in the following paragraphs.

8-374. FUEL QUANTITY INDICATOR.

8-375 The fuel quantity indicator contains four separate dials which are selected for reading by one 4-position switch on the front of the indicator. Each dial is calibrated from zero to the individual tank capacity it indicates.

8-376. REMOVAL OF FUEL QUANTITY INDICATOR.

a. Remove the screws attaching the indicator to the instrument panel.

b. Disconnect the electrical connector from the indicator.

c. Remove the indicator from the instrument panel.

8-377. INSTALLATION OF FUEL QUANTITY INDICATOR.

a. Connect the electrical connector to the indicator.

b. Position the indicator in the instrument panel.

c. Secure with the mounting screws.

8-378. FUEL QUANTITY TANK UNIT. *(See figure 8-34.)*

8-379. One tank unit is installed in each of the four fuel tanks. The tank unit consists of a variable resistor assembly, adjusting screws, a moving float and linkage, a housing, an electrical connector receptacle, and a metallic bellows which prevents fuel leakage where the float linkage enters the tank unit housing. A contact arm slides along a fixed resistor as the float arm moves with the fuel level, thereby changing the current

TABLE 8-18
TROUBLE SHOOTING - FUEL QUANTITY CIRCUIT

TROUBLE	PROBABLE CAUSE	REMEDY
a. Indicator on empty in all positions.	Circuit breaker open.	Close circuit breaker.
	Faulty indicator.	Replace indicator.
	Faulty wiring (open in common wire, etc).	Isolate and repair.
b. Indicator on empty in one position.	Faulty tank unit.	Replace tank unit.
	Faulty wiring (open wiring from indicator to tank).	Isolate and repair.
c. Indicator reads high.	Faulty tank unit.	Replace tank unit.
	Faulty wiring (wiring grounded from indcator to tank unit).	Isolate and repair.

flow through the indicator. Two screws (marked R— and R+) inside the housing are for adjusting the stroke and end position of the contact arm.

8-380. REMOVAL OF FUEL QUANTITY TANK UNIT.

a. Empty the fuel tank.

b. Disconnect the electrical connector.

c. Remove the screws securing the tank unit to the supporting structure.

d. Remove the tank unit from the tank while guiding the float arm and the float through the opening in the fuel tank.

8-381. INSTALLATION OF FUEL QUANTITY TANK UNIT.

a. Insert the tank unit into the tank and position it on the support structure.

b. Secure the tank unit with the mounting screws.

c. Connect the electrical connector.

8-382. FUNCTIONAL TEST AND ADJUSTMENT OF FUEL QUANTITY CIRCUIT.

a. Open the circuit breaker in the main junction box. The indicator will read below the EMPTY gradation.

b. Close the circuit breaker and connect external power to the airplane. With the tank drained, the indicator pointer must read exactly EMPTY. If not, check that the float is resting on the bottom of the tank.

c. If the float position is satisfactory, remove the cover from the top of the tank unit housing and turn the R+ adjusting screw until the indicator reading is exactly EMPTY.

d. Move the float until it lightly touches the top of the fuel tank, and check the indicator for a full tank reading.

e. If the indicator reading is incorrect, turn the R— adjusting screw until the reading is exact.

f. Check the extreme limits of the indicator several times and trim if necessary.

g. Remove external power from the airplane and service the fuel tanks.

8-383. FUEL BOOSTER PUMP CIRCUIT.

8-384. GENERAL DESCRIPTION. *(See figure 8-33.)* Most C-47 and all C-117 airplanes incorporate a fuel booster pump circuit which consists of two separate (left and right) booster pump circuits. Each circuit consists of an electrical motor-driven fuel pump controlled by a switch located on the pilot's center electrical panel. Each circuit receives 24-volt d-c power through a 20-ampere circuit breaker located in the main junction box. Refer to Section XII for the circuit wiring diagram.

8-385. OPERATIONAL CHECKOUT OF FUEL BOOSTER PUMP CIRCUIT.

a. Connect external power to the airplane.

b. Place both engine mixture control levers in the IDLE CUTOFF detent.

c. Turn the fuel selector valves ON.

d. Turn both BOOSTER PUMP switches on, and check the fuel pressure indicators for normal system pressure (approximately 17 psi).

e. Turn the switches off and remove external power.

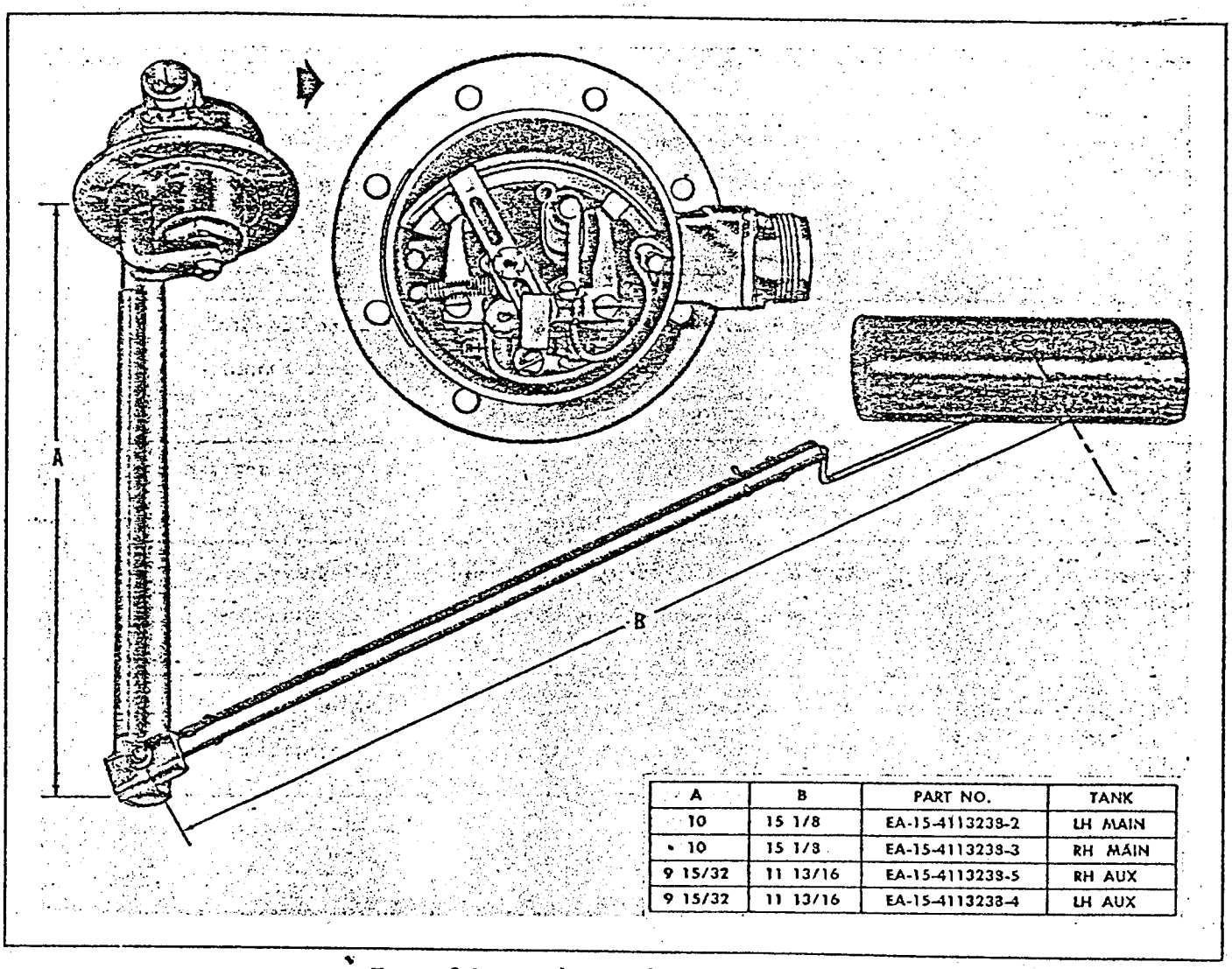

A	B	PART NO.	TANK
10	15 1/8	EA-15-4113238-2	LH MAIN
10	15 1/8	EA-15-4113238-3	RH MAIN
9 15/32	11 13/16	EA-15-4113238-5	RH AUX
9 15/32	11 13/16	EA-15-4113238-4	LH AUX

Figure 8-34. Fuel Quantity Gage Tank Unit

14,350

8-386. FUEL BOOSTER PUMP.

8-387. The fuel booster pump is driven by a 24-volt d-c, 1/8-horsepower, series-wound reversible motor. The two booster pumps are mounted on opposite sides of a bracket located in the left side of the center wing-to-fuselage joining area. (Refer to section VI.)

8-388. MAINTENANCE OF FUEL BOOSTER PUMP MOTOR. Replace the brushes if worn to within 1/16 inch of the brush holder.

8-389. WARNING SYSTEM.

8-390. **GENERAL DESCRIPTION.** The warning system provides the flight compartment with a visual and/or audible warning when an unsafe operational condition exists, or to provide the flight compartment with a means of warning or signalling the passengers. The warning system consists of an engine fire detection circuit; door-open warning circuit; emergency alarm circuit; oil and fuel pressure warning circuit (some C-47 airplanes); carbon monoxide warning circuit (C-117 airplanes); passenger warning circuit (C-117 airplanes); paratroop warning (C-47 airplanes); and a blower warning circuit. Refer to Section XII for the various circuit wiring diagrams.

8-391. **OPERATIONAL CHECKOUT OF WARNING SYSTEMS.**

a. Turn the master battery switch ON.

b. Conduct a "press-to-test" check of all warning lights.

c. Hold the fire detection TEST switch closed for 10 seconds or less. Both warning lights will illuminate.

d. Both fire warning lights will remain illuminated momentarily after releasing the TEST switch.

e. Turn the master battery switch OFF.

8-392. **TROUBLE SHOOTING OF WARNING SYSTEMS.** Trouble shooting procedures for the various warning circuits are outlined in table 8-19.

8-393. **ENGINE FIRE DETECTION CIRCUIT.**

8-394. GENERAL DESCRIPTION. *(See figure 8-35.)* Two fire detection warning lights are installed on the pilot's instrument panel to indicate a fire in the right

TABLE 8-19
TROUBLE SHOOTING - WARNING SYSTEMS

TROUBLE	PROBABLE CAUSE	REMEDY
a. Both fire warning lights inoperative on TEST.	Circuit breaker open (no press-to-test).	Close circuit breaker.
	Faulty TEST switch.	Replace switch.
	Faulty relay box.	Replace relay box.
	Open in power supply wiring.	Isolate and repair.
b. One fire warning light inoperative on TEST.	Faulty light bulb (no press-to-test).	Replace light bulb.
	Open in detector loop wiring.	Isolate and repair.
	Faulty relay box.	Replace relay box.
c. One fire warning light remains illuminated.	Faulty wiring.	Isolate and repair.
	Faulty relay box.	Replace relay box.
d. Door open warning light remains illuminated.	Door limit switch out of adjustment.	Adjust switch.
	Grounded wiring between light and switch.	Isolate and repair.
e. Carbon monoxide warning light inoperative; no press-to-test of light.	Circuit breaker open.	Close circuit breaker.
	Faulty light bulb.	Replace light bulb.
f. Carbon monoxide warning light remains on.	Faulty wiring.	Isolate and repair.
	Faulty reset switch.	Replace switch.
	Faulty signal assembly.	Replace signal assembly.

or left engine. A test-button switch, located adjacent to the warning lights, tests the two engine detector circuits and the relay box. The detector loop portion of the circuit consists of 15 thermocouple units connected in series by asbestos-insulated fire-zone wire which are installed forward of the firewall in the accessory section of each nacelle. When a fire occurs, the thermocouple generates an electrical signal which actuates the fire detector relay box (located on the radio equipment rack), which in turn illuminates the corresponding warning light. The circuit receives 24-volt d-c power through a 5-ampere circuit breaker located in the main junction box.

8-395. REMOVAL AND INSTALLATION OF COMPONENTS OF FIRE DETECTION CIRCUITS.

8-396. FIRE DETECTION RELAY BOX.

8-397. The fire detection relay box contains the circuit control relays and discriminators, and operates on 24-volts d-c, 2.4 amperes. The assembly, complete with shock-mounted base, is located on the radio equipment shelf. On some airplanes the assembly is mounted on the power systems junction box *(see figure 8-4)*.

8-398. REMOVAL OF FIRE DETECTION RELAY BOX.

a. Disconnect the two electrical connectors.

b. Disconnect the bonding strap.

c. Release the two lock fasteners and remove the relay box.

8-399. INSTALLATION OF FIRE DETECTION RELAY BOX.

a. Position the relay box on the shock-mounted base and secure by fastening the two lock fasteners.

b. Connect the bonding strap.

c. Connect the electrical connectors.

8-400. FIRE DETECTOR.

8-401. Fifteen thermocouple-type fire detectors are installed in the accessory section of each engine. The detector unit is of fixed polarity and provided with two terminal studs of different sizes to prevent improper wire connection.

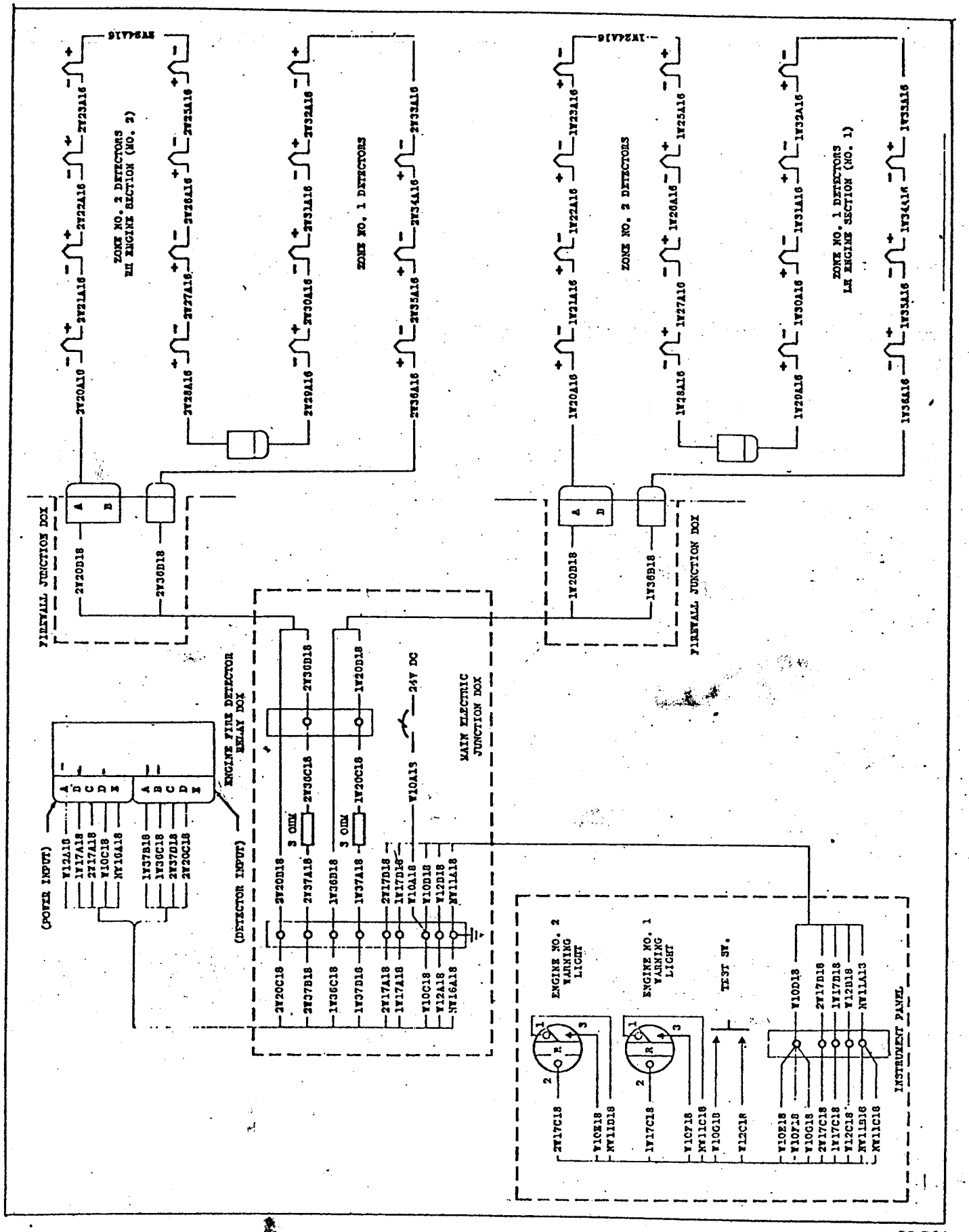

23,064

Fig. 8-35. Fire Detection Warning Circuit Schematic

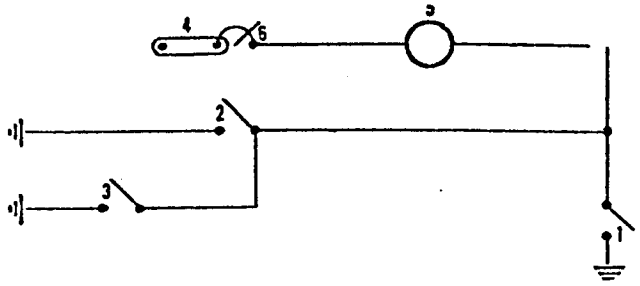

1. FORWARD DOOR WARNING SWITCH
2. AFT CARGO DOOR WARNING SWITCH
3. FORWARD CARGO DOOR WARNING SWITCH
4. MAIN JUNCTION BOX CIRCUIT BREAKER (OR FUSE) BUS
5. WARNING LIGHT
6. CIRCUIT BREAKER (OR FUSE)

DOOR-OPEN WARNING LIGHTS CIRCUIT
(C-47 AIRPLANES)

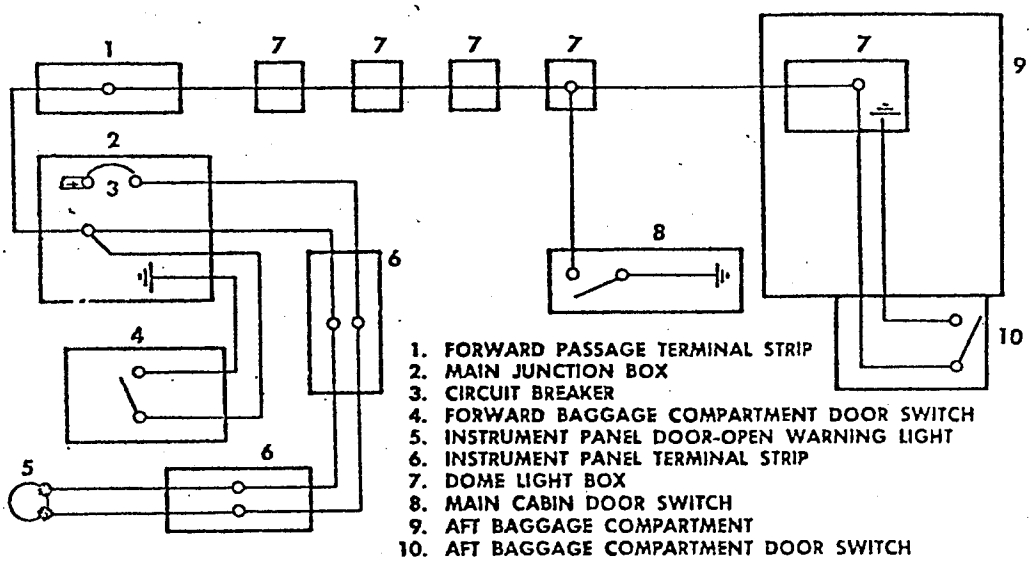

1. FORWARD PASSAGE TERMINAL STRIP
2. MAIN JUNCTION BOX
3. CIRCUIT BREAKER
4. FORWARD BAGGAGE COMPARTMENT DOOR SWITCH
5. INSTRUMENT PANEL DOOR-OPEN WARNING LIGHT
6. INSTRUMENT PANEL TERMINAL STRIP
7. DOME LIGHT BOX
8. MAIN CABIN DOOR SWITCH
9. AFT BAGGAGE COMPARTMENT
10. AFT BAGGAGE COMPARTMENT DOOR SWITCH

DOOR-OPEN WARNING LIGHTS CIRCUIT
(C-47 AIRPLANES)

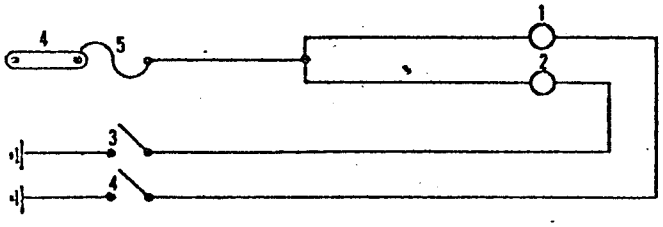

1. LH ENGINE WARNING LIGHT
2. RH ENGINE WARNING LIGHT
3. RH FIREWALL WARNING SWITCH
4. LH FIREWALL WARNING SWITCH
5. FUSE

*Fuel pressure warning lights circuit is identical to this circuit

OIL (OR FUEL*) PRESSURE WARNING LIGHTS CIRCUIT
(C-47 AIRPLANES)

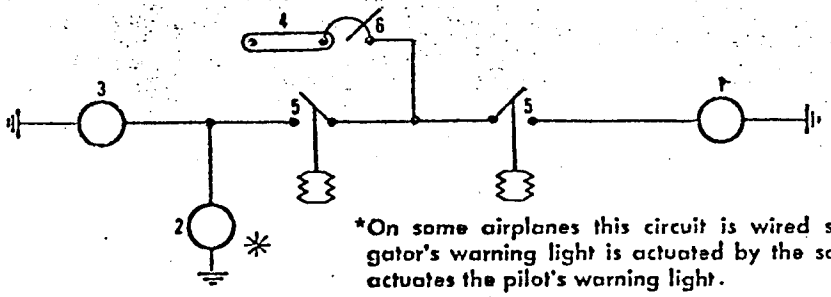

1. PILOT'S WARNING LIGHT
2. NAVIGATOR'S WARNING LIGHT*
3. CO-PILOT'S WARNING LIGHT
4. MAIN JUNCTION BOX CIRCUIT BREAKER (OR FUSE) BUS
5. OXYGEN PRESSURE SWITCH
6. CIRCUIT BREAKER

*On some airplanes this circuit is wired so that the navigator's warning light is actuated by the same switch which actuates the pilot's warning light.

OXYGEN PRESSURE WARNING LIGHTS CIRCUIT
(SOME C-47 AIRPLANES)

33,188

Figure 8-36. Warning Circuits Schematic (Sheet 1 of 3)

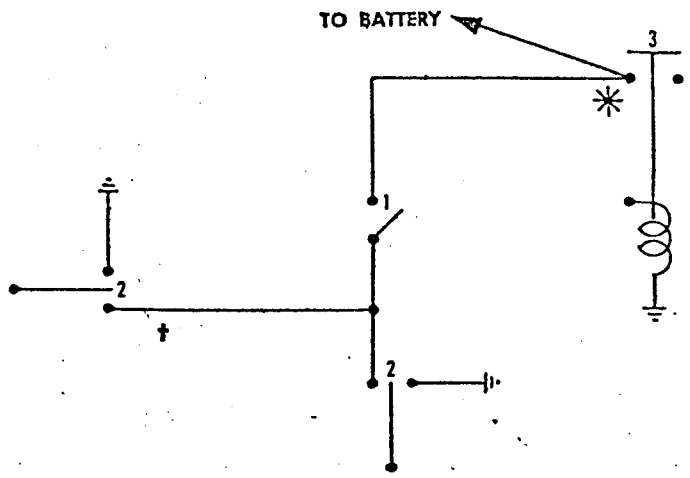

1. PILOT'S CONTROL SWITCH
2. WARNING BELL
3. BATTERY CONNECTOR RELAY

★On some airplanes, the warning bell circuit is connected to the main junction box fuse bus through a fuse.

† On some airplanes, only one alarm bell is used.

EMERGENCY ALARM CIRCUIT
(C-47 AIRPLANES)

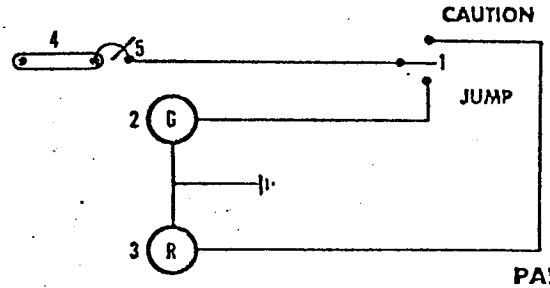

1. PILOT'S CONTROL SWITCH
2. GREEN WARNING LIGHT
3. RED WARNING LIGHT
4. MAIN JUNCTION BOX CIRCUIT BREAKER (OR FUSE) BUS
5. CIRCUIT BREAKER (OR FUSE)

PARATROOP WARNING LIGHTS CIRCUIT
(C-47 AIRPLANES)

1. RESET SWITCH
2. WARNING LIGHT
3. TUNNEL CONNECTOR PANEL
4. MAIN JUNCTION BOX
5. CIRCUIT BREAKER
6. FORWARD PASSAGEWAY TERMINAL STRIP
7. CARBON MONOXIDE SIGNAL JUNCTION BOX
8. CARBON MONOXIDE INDICATOR

CARBON MONOXIDE INDICATOR CIRCUIT
(C-117 AIRPLANES)

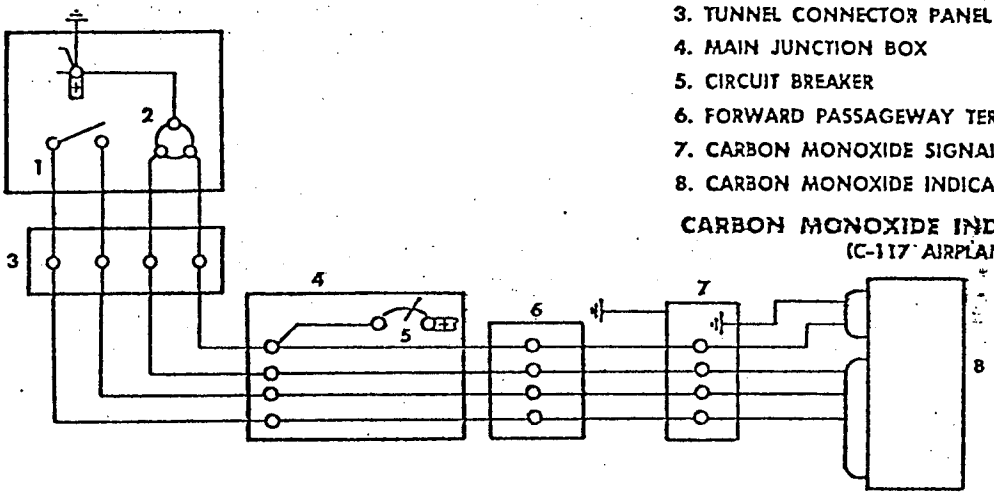

33,189

Figure 8-36. Warning Circuits Schematic (Sheet 2 of 3)

8-402. REMOVAL OF FIRE DETECTOR.

a. Remove the engine accessory cowling.

b. Dismount the detector unit.

c. Disconnect the electrical wiring and remove the detector unit.

8-403. INSTALLATION OF FIRE DETECTOR.

a. Connect the electrical wiring as shown in figure 8-35.

b. Position the fire detector on the mounting base.

c. Secure the fire detector with the mounting screws.

8-404. FUNCTIONAL TESTS OF FIRE DETECTION CIRCUIT. The functional tests for the fire detection circuit are outlined in the following paragraphs.

8-405. RESISTANCE CHECK OF FIRE DETECTION CIRCUIT.

a. Disconnect the detector input connector from the relay box.

b. Connect a low-scale test ohmmeter across the appropriate sockets (sockets A and B for the left engine; sockets C and D for the right engine). The resistance of either circuit will not exceed 6 ohms.

Note

Conduct the resistance test only when the circuit is in equilibrium. To check for circuit equilibrium, obtain a reading and reverse the test ohmmeter leads. If the circuit is in equilibrium, there will be no difference between readings. If the circuit is not in equilibrium, allow sufficient time for the detectors to cool to normal temperature before proceeding with the resistance check.

c. Check each detector circuit for freedom from ground by connecting the test ohmmeter across one socket of either circuit to ground. Repeat the check for the other circuit. The resistance for either circuit will not be less than 5000 ohms.

8-406. POLARITY TEST OF FIRE DETECTION CIRCUIT.

a. Connect the positive lead of a test milliammeter or millivoltmeter to socket A of the input plug; connect the negative lead to socket B, or for the right engine detector circuit; connect the positive lead to socket C and the negative lead to socket D.

b. Heat each thermocouple individually by placing the tip of a soldering iron directly against the tip of the detector. *Do not* short the tip of the detector to the shell when applying heat.

c. As each detector is heated, the meter will register a positive needle deflection.

CAUTION

A reversed thermocouple will not only fail to initiate the warning system, but will tend to counteract the output of other thermocouples.

8-407. ALARM CIRCUIT TEST OF FIRE DETECTION CIRCUIT.

a. Remove the alarm circuit connector from the relay box.

b. Short circuit sockets A, B, and C together.

c. Turn the master battery switch ON.

d. Operate the TEST switch. Both warning lights will illuminate.

e. Turn the master battery switch OFF and connect the electrical connectors to the relay box.

8-408. DOOR-OPEN WARNING CIRCUIT.

8-409. GENERAL DESCRIPTION. *(See figure 8-36.)* The door-open warning circuit alerts the flight compartment whenever any one of three doors is not safely closed or locked. One limit switch is attached to the flight compartment baggage door frame and is actuated by the door-locking mechanism. On C-47 airplanes, two limit switches are installed in the door jambs of the main cargo doors and both switches are actuated by the structure of the doors when closed. On C-117 airplanes, one limit switch is installed in the door frame of the main cabin door, and one switch is installed in the door frame of the aft baggage compartment door; both switches are actuated by the structure of the doors when closed. A warning light (located on the pilot's instrument panel) is grounded by any one of the door switches when the switch is not actuated by the door. The circuit receives 24-volt d-c power through a 5-ampere circuit breaker located in the main junction box. Refer to Section XII for the circuit wiring diagram.

8-410. OIL AND FUEL PRESSURE WARNING CIRCUITS.

8-411. GENERAL DESCRIPTION. *(See figure 8-37.)* Some early C-47 airplanes incorporate an oil and fuel pressure warning circuit for each engine. This circuit contains two oil-pressure warning lights and two fuel-pressure warning lights, and one pressure switch for each warning light installed on the forward side of each nacelle firewall. Either oil-pressure warning light illuminates when the respective system oil pressure drops below 50 psi. Either fuel-pressure warning light illuminates when the respective system fuel pressure

SECTION X

LANDING GEAR AND SKIS

10-1. LANDING GEAR.

10-2. **GENERAL DESCRIPTION.** *(See figures 10-1 and 10-2.)* The landing gear consists of three units: two retractable main gears with single wheels and dual brakes; and a tail wheel gear which is not retractable, but is full swiveling. Extension and retraction of the main gear is accomplished by hydraulic actuating struts which are controlled by the landing gear control lever on the hydraulic control panel.

10-3. MAIN GEAR.

Type	Two hydraulically retractable, double shock struts, single wheel units
Shock strut	Aeropneumatic
Fluid	Specification MIL-O-5606
Approximate air pressure, fully extended	160 psi
Wheels	Cast aluminum alloy
Tires	10 ply 45 x 17
Brakes	Hydraulic dual, duo-servo

10-4. TAIL WHEEL GEAR.

Type	Full swivel, nonretracting, single wheel
Shock strut	Aeropneumatic
Fluid	Specification MIL-O-5606

10-5. LANDING GEAR GROUND LOCKS. *(See figure 10-3.)*

10-6. Ground locks are provided to prevent collapsing of the main gear. The locking pin is inserted down through the truss ear and the fitting attached to the nacelle wall. The ground locks are stowed in the canvas pocket on the aft bulkhead of the main cabin compartment.

10-7. JACKING OF AIRPLANE. For special instructions on jacking the airplane under various conditions, refer to Section II.

10-8. RETRACTING MAIN GEAR WITH AIRPLANE ON JACKS. Place the airplane on jacks so that the main gear can be retracted and extended for the operational checkout of the landing gear units and the control system. Proceed as outlined in the following steps.

a. Connect the external hydraulic and electrical power supply units.

CAUTION

Clear the area around the main gear of all personnel and equipment before retracting the main gear.

b. Remove the main gear ground locks.

c. Place the mechanical safety latch control handle in the LATCH RAISED position.

d. Place the landing gear control valve handle in the UP position.

e. When the main gear is fully retracted, place the landing gear control valve handle in the NEUTRAL position.

Note

The mechanical safety latch control will automatically return to the SPRING LOCK position.

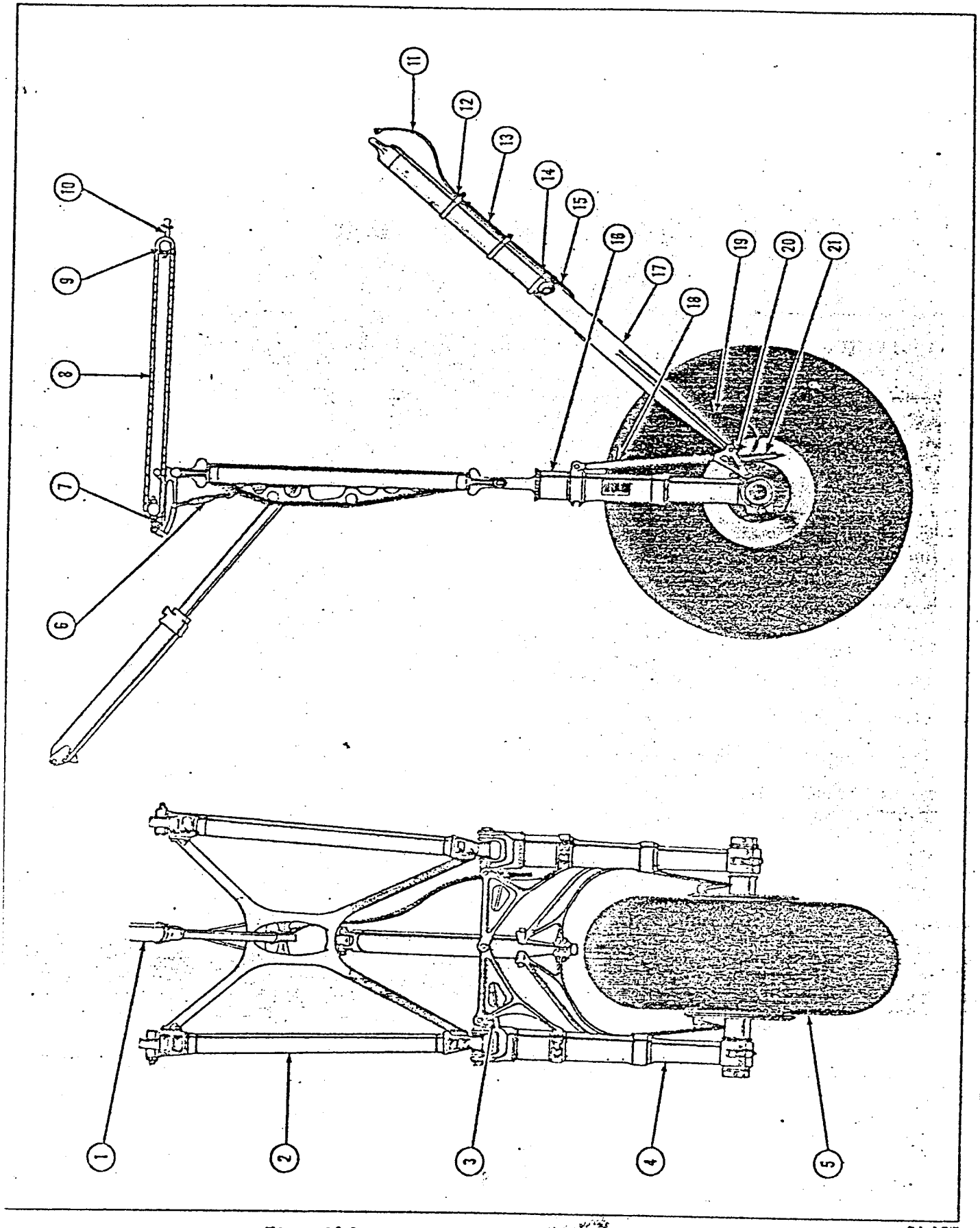

Figure 10-1. Main Landing Gear (With Bungee)

31,187

Key to Figure 10-1

Item	*Nomenclature*	*Item*	*Nomenclature*
1.	Actuating Cylinder	12.	Clamp Assembly
2.	Truss Assembly	13.	Pipe
3.	Truss Assembly	14.	Strap
4.	Shock Strut	15.	Pipe
5.	Wheel Assembly	16.	Bushing
6.	Link Assembly	17.	Rear Brace Strut Assembly
7.	Rod	18.	Arm Assembly
8.	Shock Cord	19.	Hose Assembly
9.	Yoke	20.	Link
10.	Shackle	21.	Guide
11.	Hose		

10-9. EXTENDING MAIN GEAR WITH AIRPLANE ON JACKS.

a. Move the landing gear control valve handle to the DOWN position.

b. When the main gear has been fully extended, move the landing gear control valve handle to the NEUTRAL position.

CAUTION

If the airplane is to be left standing on the ground for an extended period of time, place the landing gear control valve handle in the DOWN position to prevent damage to the landing gear hydraulic lines by thermal expansion of hydraulic fluid.

10-10. TROUBLE SHOOTING OF LANDING GEAR. (See table 10-1.)

TABLE 10-1
TROUBLE SHOOTING - LANDING GEAR

TROUBLE	PROBABLE CAUSE	REMEDY
a. Landing gear does not respond to operation of control valve although constant pressure is indicated.	Faulty control valve.	Check adjustment of, or remove and replace, control valve.
	Faulty actuating cylinder.	Check operation of actuating cylinder.
b. Shock struts do not operate smoothly.	Low air pressure.	Check air pressure; refer to paragraph 10-26.
	Packing nut overtorqued.	Loosen packing nut one-quarter turn; check for leaks.
c. Hard impact shock on landing.	Incorrect inflation.	Check for leakage of air or fluid.
d. Fluid leakage around piston of shock strut.	Packing leaking.	Replace packing.
	Damaged or pitted surface on piston.	Remove and replace strut.
e. Landing gear indicator and warning lights do not operate.	Mechanical safety latch broken or out of adjustment.	Adjust, or remove and replace, safety latch.
	Switches inoperative or out of adjustment.	Adjust, or remove and replace, switches.

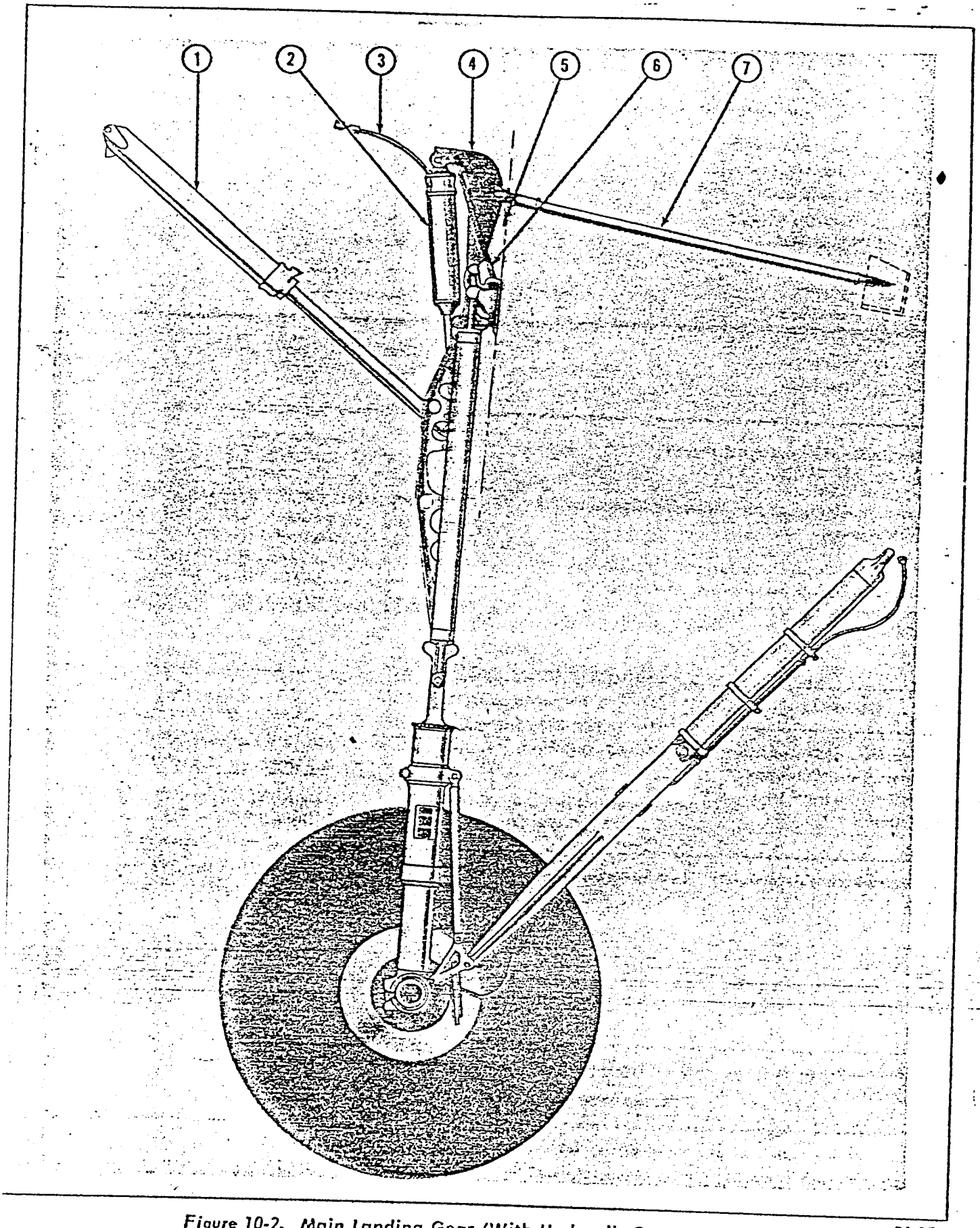

Figure 10-2. Main Landing Gear (With Hydraulic Compensator)

31,188

Key to Figure 10-2

Item	*Nomenclature*	*Item*	*Nomenclature*
1.	Actuating Cylinder	5.	Cover Assembly
2.	Compensator Cylinder	6.	Brace
3.	Hose Assembly	7.	Tie Rod Assembly
4.	Bracket		

TABLE 10-1 (Continued)

TROUBLE	PROBABLE CAUSE	REMEDY
f. Grinding noise in wheel when airplanes is towed or taxied.	Wheel bearing failure.	Remove and replace bearing.
g. Brakes inoperative.	Faulty brake control valve.	Remove and replace.
	Faulty brake actuating cylinder.	Remove and replace.
	Obstruction in hydraulic pressure piping.	Check hydraulic piping for obstruction or kinks.
	Faulty adjustment or mechanical failure between brake pedals and control valve.	Adjust, or remove and replace, pedal linkage.
	External leak in the system.	Inspect piping, fittings, and units for external leakage.
h. Dragging brakes.	Binding of pedal linkage.	Free point of binding.
	Parking brake improperly adjusted.	Adjust parking brake so that brakes work freely.
	Broken shoe return spring.	Remove and replace.
	Insufficient shoe-to-drum clearance.	Adjust brakes, refer to paragraph 10-71.
i. Brakes squeal.	Brake lining worn below rivet heads.	Remove and replace brake shoes. Remove and replace scored brake drums.
j. Tail wheel does not lock when wheel is in trail position.	Dural pin sheared.	Replace pin.
	Locking spring broken.	Replace spring.
	Faulty adjustment of cables or control handle.	Adjust cables and control handle.
k. Excessive vibration of tail wheel.	Tail wheel bearing failure.	Remove and replace bearings.
	Excessive wear of tail wheel bushings.	Rebush tail wheel gear.

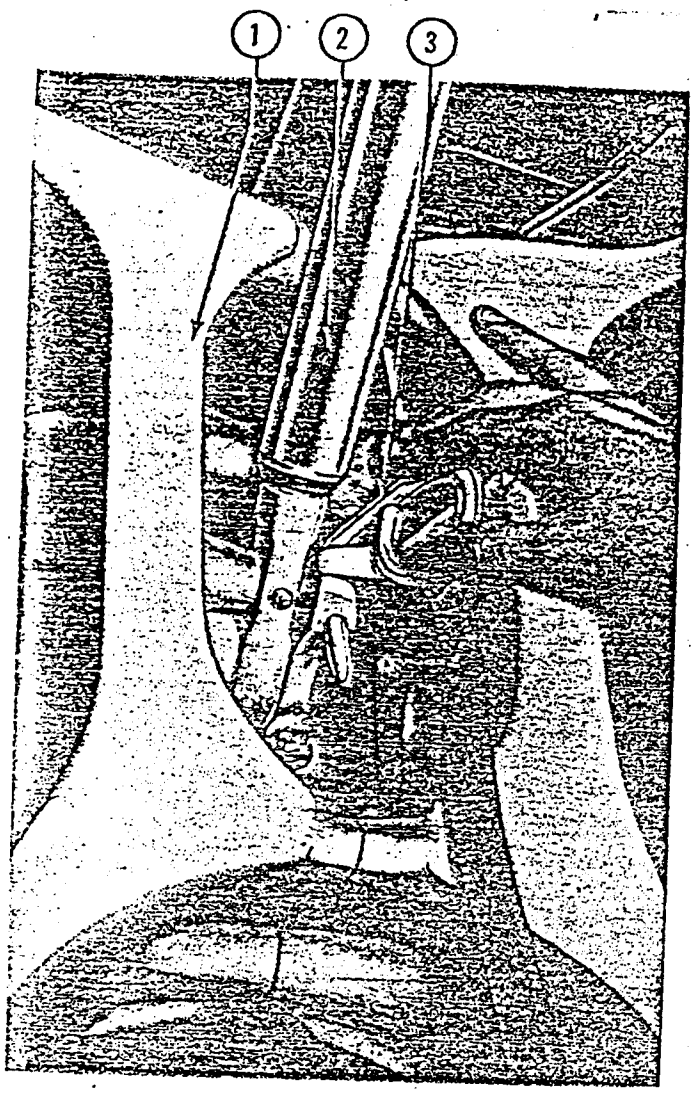

31,189

Figure 10-3. Ground Gear Lock Installed

Key to Figure 10-3

Item	*Nomenclature*
1.	Landing Gear Upper Truss
2.	Landing Gear Actuating Cylinder Piston Rod
3.	Landing Gear Ground Lock

10-11. REMOVAL, DISASSEMBLY, ASSEMBLY, AND INSTALLATION OF LANDING GEAR COMPONENTS. Removal, disassembly, assembly, and installation of the landing gear components are accomplished as outlined in the following paragraphs.

0-12. SPECIAL TOOLS AND EQUIPMENT REQUIRED. For special tools and equipment required for the landing gear, refer to the applicable figures and paragraphs as outlined in this section.

0-13. MAIN GEAR.
(See figure 10-4.)

0-14. The main single-wheel landing gear retracts forward and up into the nacelle of each wing. Each main gear consists of two oleopneumatic shock struts, trusses, links, yoke, rear brace strut, hydraulic actuating cylinder, bungee or compensator, safety latch, warning light switches, wheel, and brakes. When the gear is fully retracted, the projecting ends of the axles are held against rubber bumpers installed in the sides of the nacelles leaving a small portion of the tire projecting below the lower contour of the nacelle.

10-15. REMOVAL OF MAIN GEAR.

a. Place the airplane on jacks (see Section II).

b. Relieve the hydraulic system pressure by operating the wing flaps.

c. Remove the bungee as outlined in paragraph 10-40, or remove the hydraulic compensator as outlined in paragraph 10-44.

WARNING

Extreme care must be taken when removing the bungee or serious injury to personnel and damage to the airplane may result.

d. Disconnect the actuating cylinder piston rod from the upper truss.

e. Raise the safety latch.

f. Disconnect and cap the brake hydraulic piping at the upper end of the rear brace strut.

g. Remove the microswitch and wires from the strut.

h. Support the gear with a suitable stand.

i. Remove the bolts attaching the shock struts to the upper truss.

j. Remove the bolt attaching the upper end of the rear brace strut.

k. Remove the upper truss.

10-16. INSTALLATION OF MAIN GEAR.

a. Install the upper truss.

b. Install the bolt attaching the upper end of the rear brace strut.

c. Install the bolts attaching the shock struts to the upper truss.

Key to Figure 10-4	
Item	*Nomenclature*
1.	Landing Gear Upper Truss
2.	Rear Brace Strut
3.	Shock Absorber Strut

d. Install the microswitch and connecting wire.

e. Connect the brake hydraulic piping.

f. Connect the actuating cylinder piston rod to the upper truss.

g. Install the bungee in accordance with the procedure outlined in paragraph 10-41, or install the hydraulic compensator in accordance with the procedure outlined in paragraph 10-45.

10-17. MAIN GEAR SHOCK STRUT.

10-18. Each main gear wheel is mounted between two pneumatic-hydraulic shock absorber struts which absorb the landing and taxiing loads imposed on the airplane. Landing loads are absorbed mainly by forcing the hydraulic fluid in the strut through an orifice located in the lower cylinder of the strut. Taxiing loads are absorbed principally by the compression of the air in the upper chamber of the strut. Piping between the two struts aids in balancing the air pressure.

10-19. REMOVAL OF MAIN GEAR SHOCK STRUT.

a. Install the ground safety locks in both main gears.

b. Support the airplane on jacks.

WARNING

Do not remove the filler plug while air pressure is in the shock strut.

c. Slowly release all air pressure in the shock struts by backing off the filler plug slightly.

d. Disconnect and remove the balance piping between the struts.

e. Disconnect the rear brace strut from the shock struts.

f. Remove the axle clamp bolt from the strut to be removed.

g. Remove the bolt connecting the shock strut upper braces.

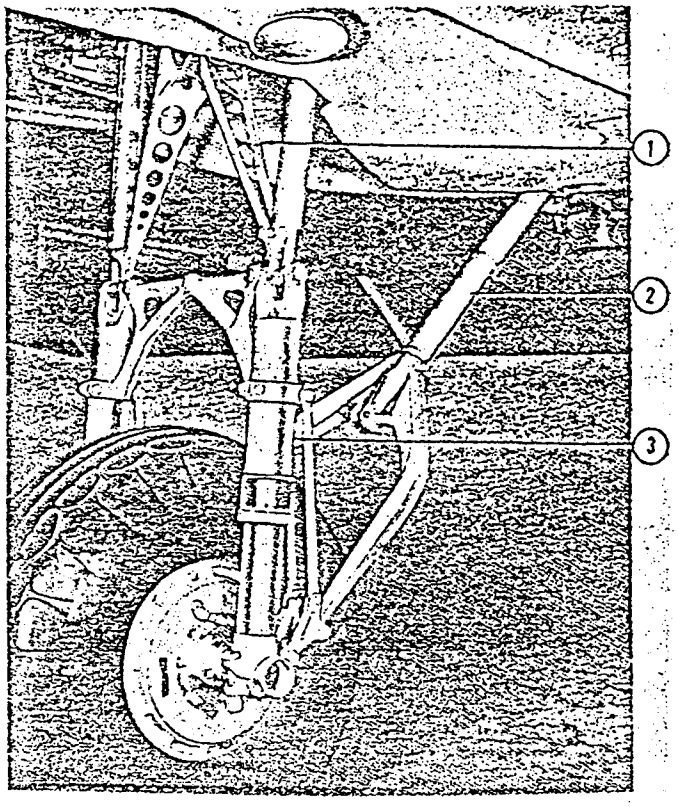

31.190

Figure 10-4. Main Landing Gear Extended

h. Remove the bolt attaching the shock strut to the upper truss, and remove the shock strut.

i. Remove the upper brace, arms, and triangular links from the shock strut.

10-20. DISASSEMBLY OF MAIN GEAR SHOCK STRUT.

Disassembly of the main gear shock strut is accomplished as outlined in the following steps.

a. Back off the filler plug slightly and release all air pressure.

WARNING

Do not remove the filler plug until all the air has been released.

b. Remove the filler plug and drain the hydraulic fluid from the strut.

c. Remove the lock ring from the bearing nut.

d. Remove the bearing nut, using service tool No. K26414 and separate the two cylinders.

e. Remove the two lockscrews from the upper bearing.

Note

The two lockscrews are staked in position. Care must be taken when removing these screws.

f. Unscrew the upper bearing from the inner cylinder and slide off all the packing gland parts.

g. Remove the metering pin from the nut and lift off the metering pin gasket and lockwasher.

Note

Do not remove the metering pin unless definite leakage has been determined.

h. Remove the lockscrew from the piston.

i. Unscrew the piston from the piston tube orifice.

10-21. ASSEMBLY OF MAIN GEAR SHOCK STRUT. Assembly of the main gear shock strut is accomplished as outlined in the following steps.

a. Place the orifice on the end of the piston tube and attach it with the piston.

b. Secure the piston with the pistol lockscrew.

c. Place the inlet gasket on the connection boss and attach the inlet connections with the bolt.

d. Position the metering pin gasket on the inner cylinder diaphragm and attach the metering pin to the diaphragm with the lockwasher and nut.

e. Tighten the metering pin to a torque of approximately 40 foot-pounds (480 inch-pounds).

f. With the open ends of the ports facing in the same direction as the open end of the inner cylinder, place the units on the inner cylinder in the following order: bearing nut, packing gland wiper ring, lower bearing, female adapter, leather V-ring packings, rubber V-ring packings, male adapter, packing washer (with the flat end facing in the same direction as the closed end of the inner cylinder), snubber valve, and the upper bearing.

g. Tighten the upper bearing and secure it with the two lockscrews.

h. Stake the lockscrews securely.

i. Lubricate all parts thoroughly with hydraulic oil, Specification MIL-O-5606, and carefully slide the inner cylinder assembly halfway into the outer cylinder assembly.

Note

Do not damage the feathered edges of the packing rings.

j. Wet the packing rings with hydraulic oil, Specification MIL-O-5606.

k. Using a piece of shim stock, install the packing rings one at a time.

l. Slide the female adapter, lower bearing, packing gland wiper ring, and bearing nut into position.

m. Tighten the bearing nut, using service tool No. K 26414, and secure it with the lock ring.

n. Service the strut as outlined in paragraph 10-26.

10-22. TEST PROCEDURE FOR MAIN GEAR SHOCK STRUT.

10-23. TEST OF MAIN GEAR SHOCK STRUT IN FLIGHT POSITION. Make a leakage test of the shock absorbing strut in the flight position (fully extended) and under normal inflation pressure. After a 1-hour test period, no leakage of fluid or loss of air pressure is permitted.

10-24. TEST OF MAIN GEAR SHOCK STRUT IN NORMAL STATIC POSITION. Make the leakage test of the shock absorbing strut in the normal static position with a normal compression load and normal air pressure (obtained when the airplane is at rest and loaded to full normal take-off weight, including crew members, passengers, and/or equipment to be carried). At the end of a 1-hour test period, no appreciable leakage of fluid or loss of air pressure is permitted.

10-25. INSTALLATION OF MAIN GEAR SHOCK STRUT.

a. Install the upper brace, arms, and triangular links on the shock strut.

b. Position the strut and install the bolt attaching the shock strut to the upper truss.

c. Install the bolt connecting the shock strut to the upper braces.

d. Install the axle clamp.

e. Connect the rear brace strut to the shock struts.

f. Connect the balance piping between the struts.

g. Fill the strut with fluid and air as outlined in paragraph 10-26.

10-26. SERVICING MAIN GEAR SHOCK STRUT. Servicing of the main gear shock strut is accomplished as outlined in the following steps.

a. Use hydraulic fluid, Specification MIL-O-5606, for filling the shock strut.

b. To check the fluid level, or fill the strut, loosen the filler plug slightly and allow the air to escape slowly.

CAUTION

Do not depress the valve core to deflate the strut.

WARNING

Do not completely remove the filler plug until the strut is fully compressed.

c. Remove the filler plug.

d. Fluid level is to be at the lower edge of the filler opening when the strut is fully compressed.

WARNING

Inflate the shock struts with compressed air or nitrogen only. DO NOT use oxygen, hydrogen, acetylene, etc, or serious damage will result.

e. When filling an empty strut, move the strut through its full stroke two or three times to remove the trapped air.

f. Actual air pressure required to inflate the shock strut depends upon three factors: the actual load on the strut, the friction on the packing, and the binding friction due to stresses imposed on the strut. Do not attempt to measure the shock strut air pressure with a gage, as air in the strut is of high pressure and low volume. Apply air until the strut is extended 4 ($\pm \frac{1}{4}$) inches, measured from the top edge of the axle to the bottom edge of the packing nut, with the airplane fuel and oil tanks full. Move the airplane back and forth several feet to overcome packing friction before making a final check.

g. Use air valve caps, painted yellow, and install with a torque of 15 to 25 inch-pounds.

h. If there is any indication of fluid leakage at the packing gland nut, release the air pressure completely.

i. Tighten the gland nut, using the Douglas No. K26414 service tool.

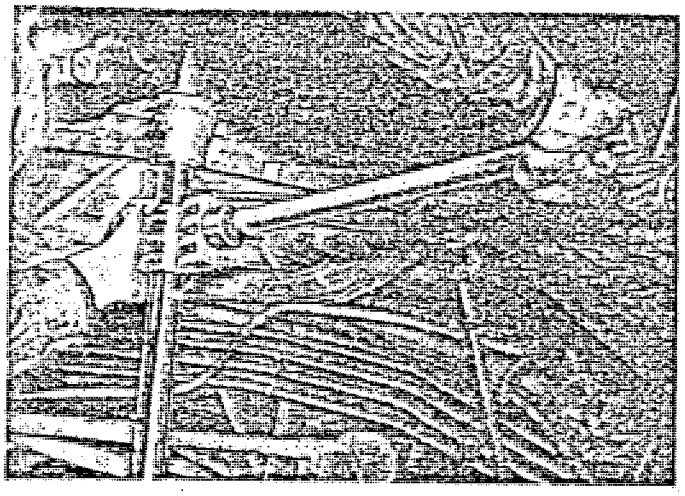

31,191

Figure 10-5. Use of Piston Rod Clamp (Service Tool No. K21714)

j. If there is still indication of packing failure, remove and replace the shock strut assembly.

10-27. LANDING GEAR ACTUATING CYLINDER.

(See figures 10-1 and 10-2.)

10-28. The landing gear actuating cylinder, attached to the nacelle structure aft of the firewall, extends through an indentation in the oil tank, and is bolted to the upper truss of the landing gear. When hydraulic fluid under pressure is directed to the upper end of the actuating cylinder, the piston rod extends and lowers the landing gear. When hydraulic fluid under pressure is directed to the lower end of the actuating cylinder, the piston rod retracts, pulling the landing gear up into the nacelle. The actuating cylinder mechanism includes a dashpot which serves as a shock absorber so that the actuating cylinder piston comes to rest slowly at the end of the retracting stroke, without damage to the attaching structure. The dashpot traps some of the hydraulic fluid at the end of the retracting stroke and the fluid is forced through a hole in the dashpot, absorbing the energy and converting it into heat in the same manner as a shock absorbing unit.

10-29. REMOVAL OF LANDING GEAR ACTUATING CYLINDER.

a. Install the ground safety pins in both landing gear upper trusses.

b. Relieve the hydraulic system pressure by operating the wing flaps.

c. Disconnect and cap the flexible hoses at the connections located at the top of the nacelle.

d. Support the actuating cylinder and remove the attaching bolt from the nacelle structure.

e. Remove the bolt attaching the actuating cylinder piston rod to the landing gear upper truss.

f. Move the landing gear mechanical safety latch control handle to the LATCH RAISED position and remove the actuating cylinder.

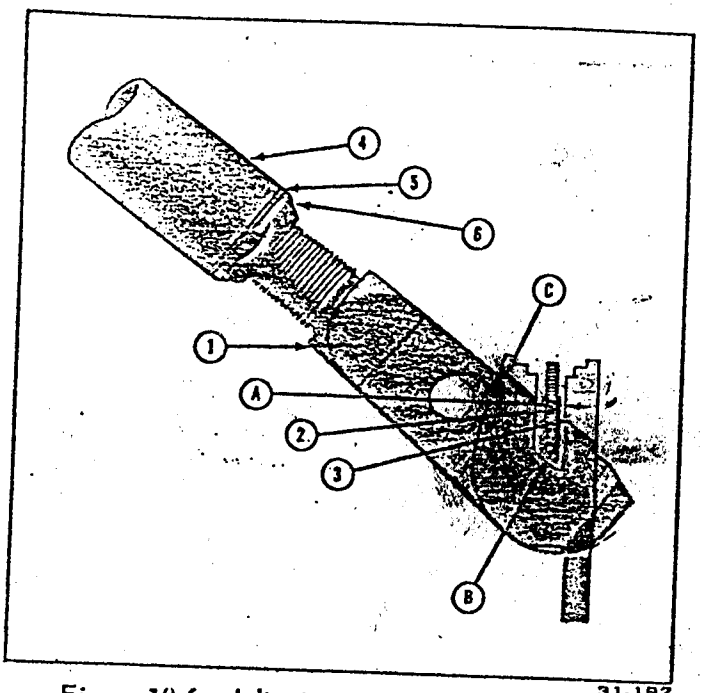

Figure 10-6. Adjustment of Actuating Cylinder Hook and Safety Latch Guide (Sheet 1 of 2)

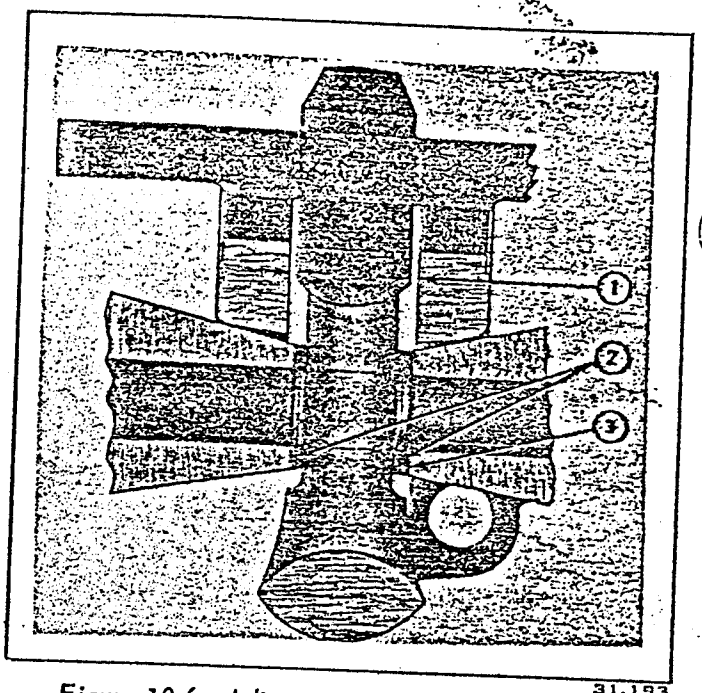

Figure 10-6. Adjustment of Actuating Cylinder Hook and Safety Latch Guide (Sheet 2 of 2)

Key to Figure 10-6 (Sheet 1 of 2)

Item	*Nomenclature*
1.	Hook
A.	$\frac{1}{64}$- to $\frac{1}{32}$-Inch Clearance with Full Down Pressure in Landing Gear Hydraulic System. Flush to $\frac{1}{32}$ Inch with No Down Pressure
2.	Latch
3.	Guide
B.	$\frac{1}{64}$- to $\frac{1}{32}$-Inch Clearance
4.	Piston Rod
5.	Lockwasher
6.	Lock Nut
C.	$\frac{3}{32}$-Inch Minimum Clearance with Latch Control Handle in the LATCH RAISED Position

Key to Figure 10-6 (Sheet 2 of 2)

Item	*Nomenclature*
1.	Minimum Clearance Either Side — 0.035 Inch
2.	Spacing Washers
3.	Allowable Side Play — 0.010 Inch

10-30. INSTALLATION OF LANDING GEAR ACTUATING CYLINDER.

a. Position the actuating cylinder and install the bolt attaching the piston rod to the upper truss.

b. Install the bolt attaching the cylinder to the nacelle structure.

c. Connect the flexible hoses at the connections located at the top of the nacelle.

10-31. ADJUSTMENT OF LANDING GEAR ACTUATING CYLINDER.

a. Unstake the lockwasher from the nut and piston rod.

b. Hold the actuating cylinder piston rod with a strap wrench *(see figure 10-5)*.

c. Loosen the lock nut and turn it down sufficiently so that the piston rod can be turned to adjust the hook end.

d. Apply full DOWN pressure to the gear and place the safety latch handle in the LATCH RAISED position.

e. Note the relationship of the aft face of the hook slot with the aft face of the guide slots. Follow closely the dimensions shown in figure 10-6.

f. Relieve the hydraulic system pressure by operating the wing flaps.

g. Place the landing gear control valve in the DOWN position.

h. Turn the actuating cylinder piston rod until the proper adjustment is obtained.

Note

One complete turn of the piston rod will lengthen or shorten it $\frac{1}{16}$ inch.

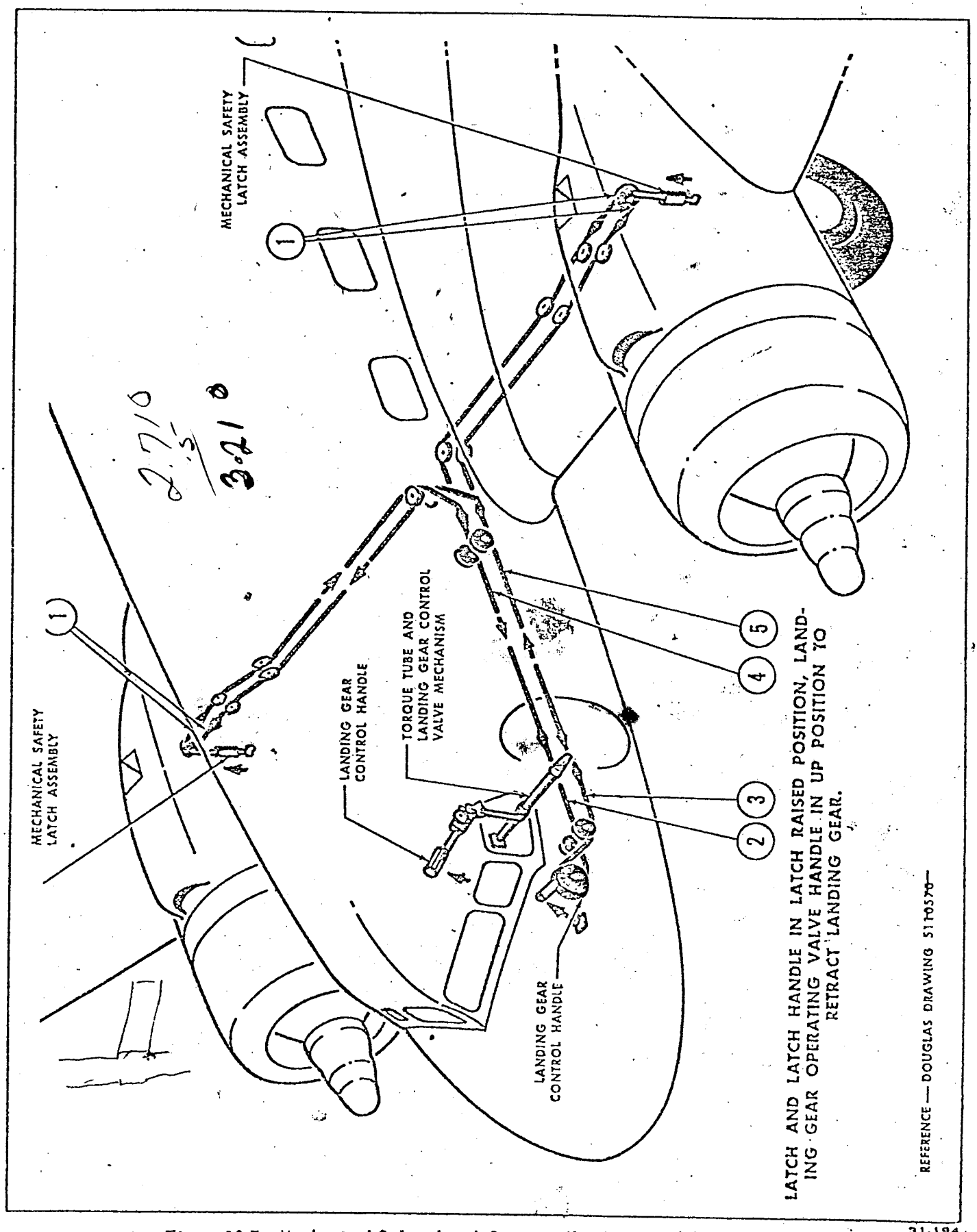

Figure 10-7. Mechanical Safety Latch System - Key Drawing (Sheet 1 of 2)

CABLE REF NO.	DOUGLAS CABLE ASSEMBLY DRAWING NO.	NO. REQD	TYPE	CABLE LENGTH		CABLE SIZE	FITTINGS			
				(L_1)	(L_2)		(1)	(2)	(3)	(4)
1	2117032-1	1	A	232 L_3 110 1/2	121 1/2	3/32 dia 7x7 flex	1028931L	1028931L		
2	2117032-4	1	A	226 L_3 116	110	3/32 dia 7x7 flex	1028931L	1028931L		
3	1117031-1	1	B	23 3/4		3/32 dia 7x7 flex	1028931L			
4	1117031-3	1	B	32 3/4		3/32 dia 7x7 flex	1028931R			

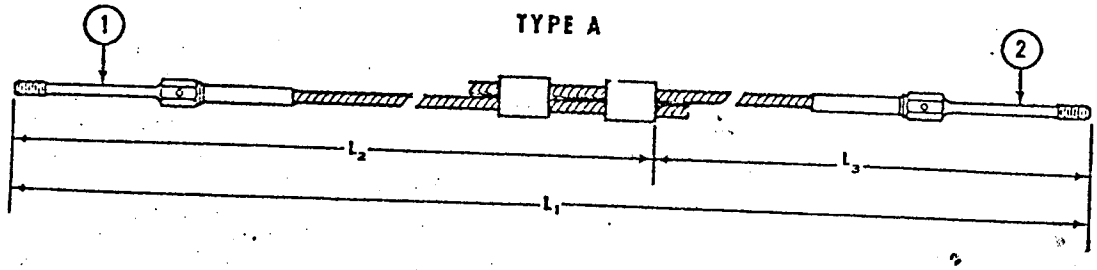

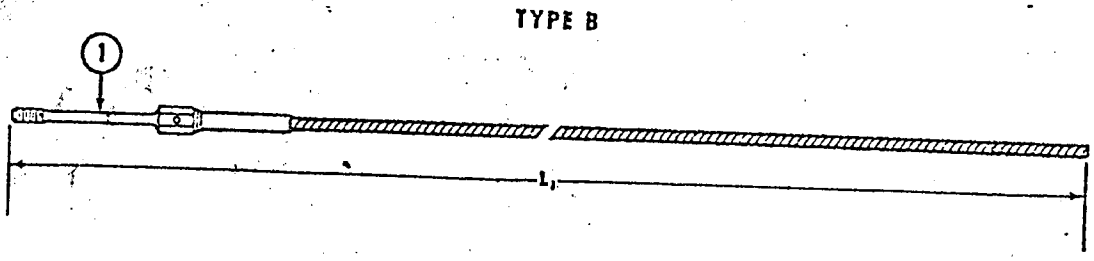

Figure 10-7. Mechanical Safety Latch System - Cable Chart and Cable Assemblies (Sheet 2 of 2)

31.195

i. After the correct length has been obtained, unscrew the piston rod 1/8 inch and tighten the lock nut snugly. Tighten the piston rod 1/8 inch against the lock nut. This will insure that the piston rod hook is located in the exact position.

j. Again check the adjustment.

k. Safety the lockwasher by punching lightly into the slots in the lock nut and piston rod.

l. Remove the strap wrench.

10-32. MECHANICAL SAFETY LATCH SYSTEM.

(See figure 10-7.)

10-33. A spring-loaded mechanical safety latch *(see figure 10-8)*, installed in each nacelle on the forward side of the wing front spar, automatically latches when the landing gear is fully extended, by engaging a slot *(see figure 10-9)* in the lower end of the actuating cylinder piston rod. Latches for both gears are controlled simultaneously by cables connected to the single control handle *(see figures 10-10 and 10-11)* located on the floor to the right of the pilot's seat. The control handle

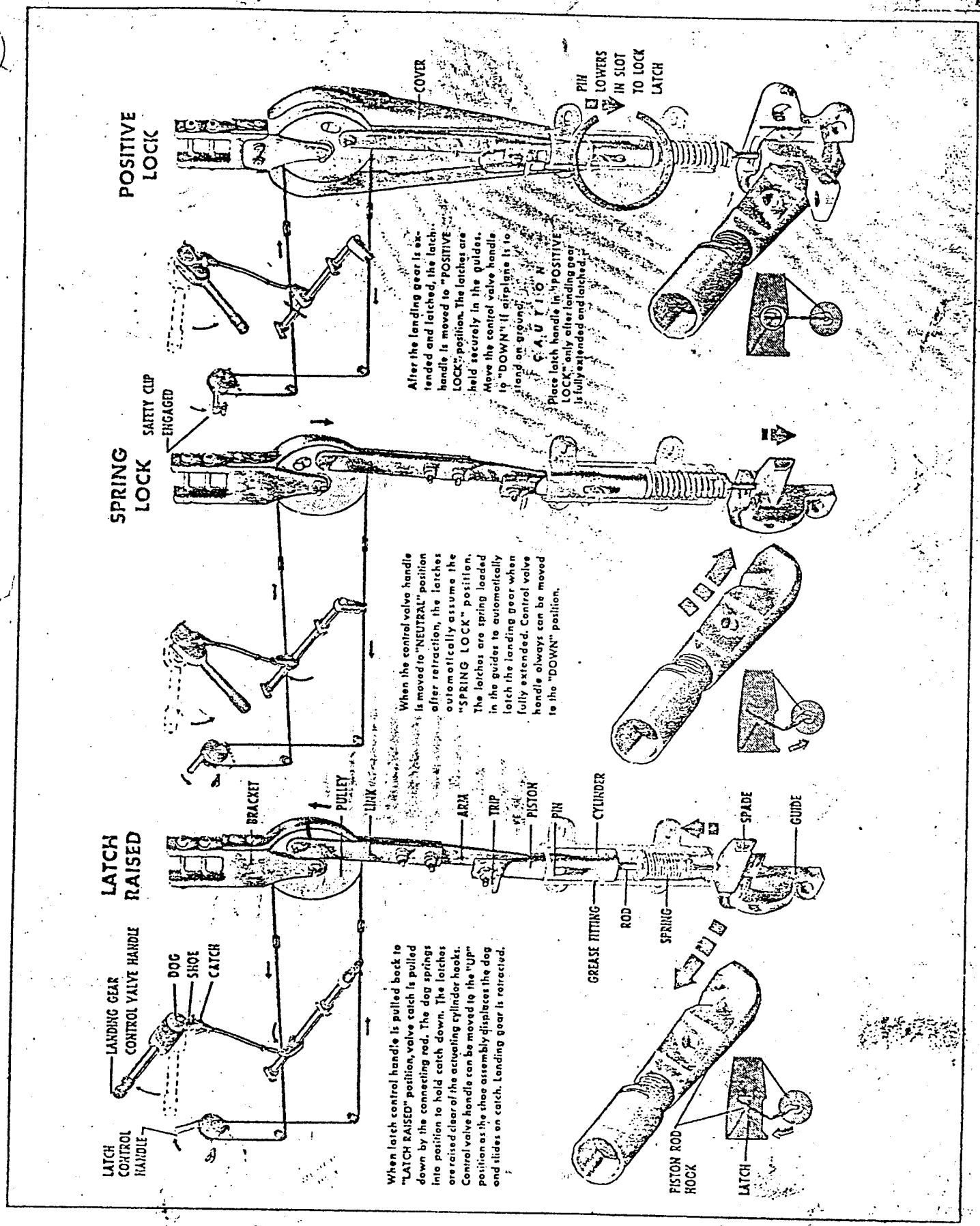

Figure 10-8. Operation of Mechanical Safety Latch

31,195

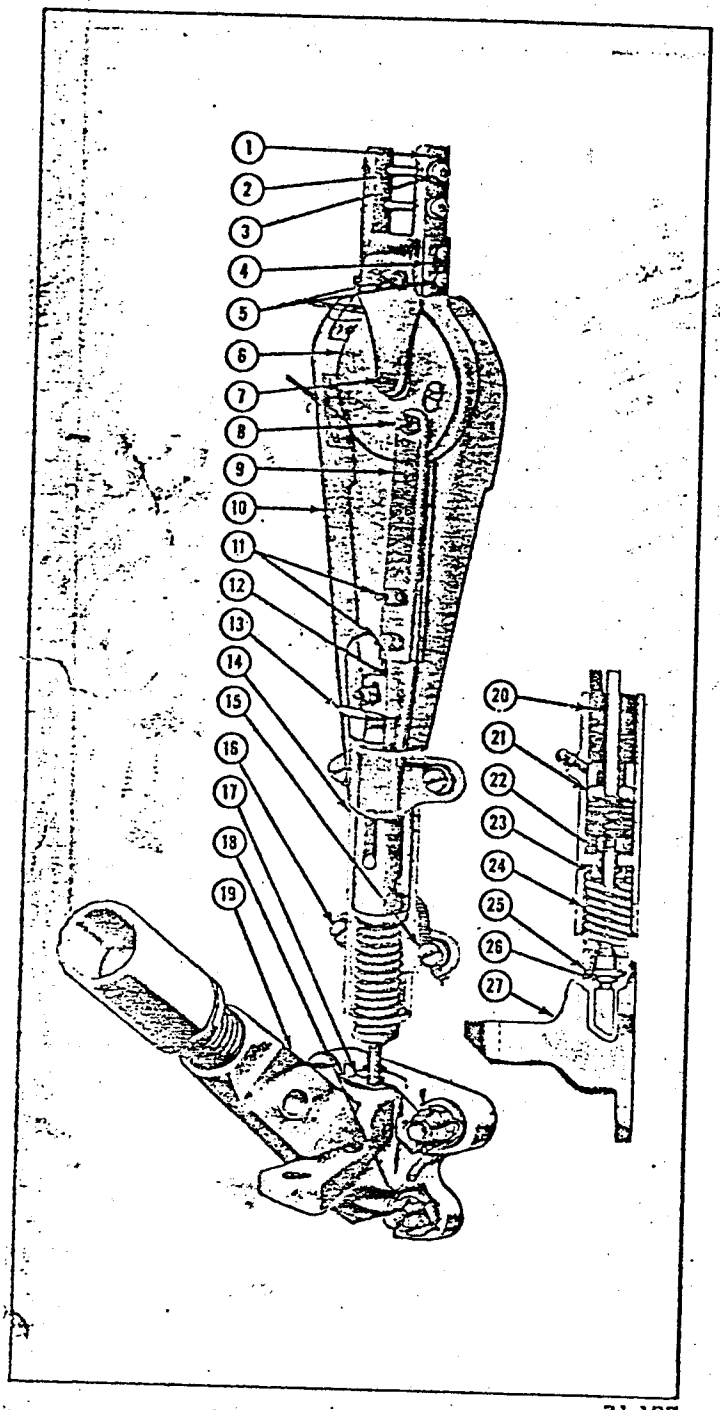

31,197

Figure 10-9. Mechanical Safety Latch Assembly

Key to Figure 10-9

Item	Nomenclature
1.	Bracket
2.	Washer (shim as necessary to provide 0.015-inch maximum play)
3.	Bolt, Washer and Nut
4.	Guard
5.	Screw and Lockwire
6.	Pulley Assembly
7.	Bolt, Nut and Cotter
8.	Bolt, Bushing, Washer, Nut and Cotter
9.	Link
10.	Cover
11.	Bolt, Shim, Washer and Nut
12.	Arm Assembly
13.	Trip
14.	Cylinder Assembly
15.	Screw, Washer and Lockwire
16.	Nut and Washer
17.	Latch
18.	Nut, Washer, and Lockwire
19.	Landing-Gear Actuating Cylinder Hook
20.	Piston
21.	Pin
22.	Rod
23.	Retainer and Felt Washer
24.	Spring
25.	Nut
26.	Nut
27.	Guide

has three positions: LATCH RAISED, which releases the landing gear for retraction; SPRING LOCK, which receives and latches the landing gear actuating cylinder hook (landing gear extended); and POSITIVE LOCK, for locking the actuating cylinder piston rod hook when the gear is completely extended. The control handle is connected by linkage to a catch and dog *(see figure 10-12)* on the landing gear control valve. The catch and dog prevent the control valve from being moved into the UP position if the mechanical safety latch is in the POSITIVE LOCK or SPRING LOCK position.

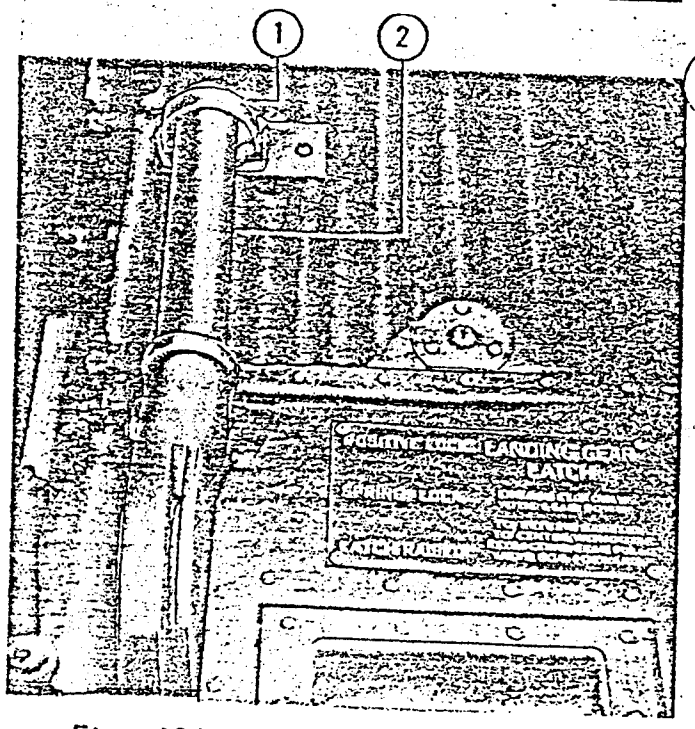

Figure 10-10. Mechanical Safety Latch Control Handle (C-47 Airplanes) 31,198

Key to Figure 10-10

Item	Nomenclature
1.	Positive Locking Clip
2.	Safety Latch Control Handle

10-34. REMOVAL OF MECHANICAL SAFETY LATCH SYSTEM.

a. Remove the bolts attaching the linkage to the catch and dog mechanism on the landing gear control valve.

b. Disassemble the turnbuckles and remove the cable controls.

c. Remove the latch and other components, as necessary, by removing the attaching bolts.

10-35. INSTALLATION OF MECHANICAL SAFETY LATCH SYSTEM.

a. Securely bolt all pulley brackets and components to the structure.

b. Install the control cables and turnbuckles. Safety the turnbuckles with lockwire.

c. Install the bolts attaching the linkage to the catch and dog mechanism on the landing gear control valve.

10-36. ADJUSTMENT OF LATCH GUIDE.

a. Position the hook on the landing gear actuating piston rod centered in the latch guide.

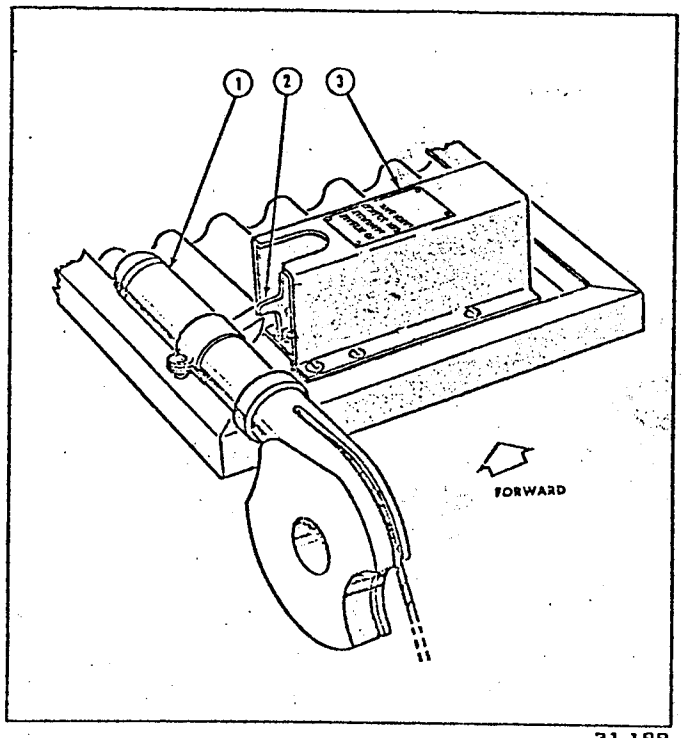

31,199

Figure 10-11. Mechanical Safety Latch Control Handle (C-117 Airplanes)

Key to Figure 10-11

Item	*Nomenclature*
1.	Safety Latch Control Handle
2.	Solenoid Catch
3.	Solenoid Cover

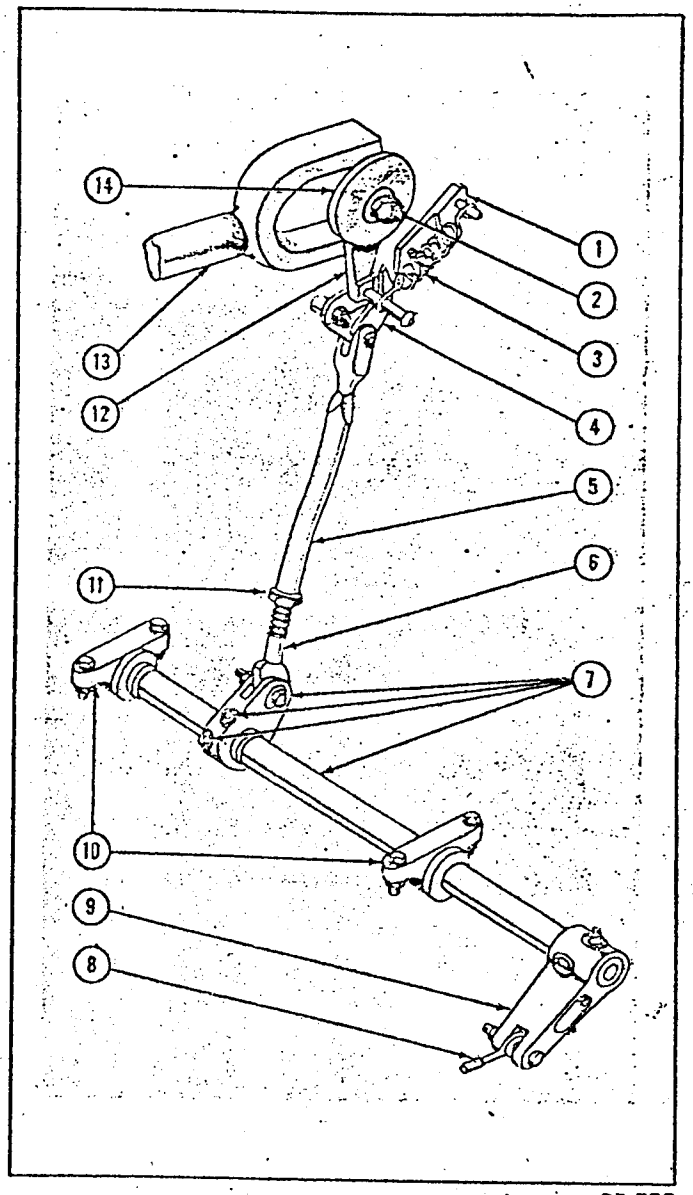

33,000

Figure 10-12. Mechanical Safety Latch—Torque Tube and Control Valve Mechanism

Key to Figure 10-12

Item	*Nomenclature*
1.	Shoe Assembly
2.	Cap Nut
3.	Spring
4.	Cam Assembly
5.	Connecting Rod
6.	Eyebolt Assembly
7.	Torque Tube Assembly
8.	Pin Eye — RH
9.	Arm
10.	Bearing Assembly
11.	Nut
12.	Dog Assembly
13.	Handle Assembly
14.	Bushing

b. The guide can be moved to the right or left by loosening the attaching nuts.

c. Any movement of the guide requires a similar movement in the latch mechanism. Oversize holes allow movement of the latch by loosening the attaching nuts.

d. To make further adjustment shift the position of the spacing washers between the hook and the landing gear upper truss. Follow closely all dimensions called for in figure 10-6.

e. Move the latch guide up or down to obtain the proper position with respect to the bottom face of the hook slot. The bottom face of the hook slot will be 1/64 to 1/32 inch below the face of the latch guide slots *(see figure 10-6)*.

10-37. ADJUSTMENT OF LATCH CONTROL SYSTEM.

a. Adjust all turnbuckles in the nacelles and fuselage area so that the threads are just covered.

b. Place latch control handle in the LATCH RAISED position and note the position of the latches in nacelles.

c. Adjust the nacelle cables until both latches are in the same position.

d. Release the latches to the SPRING LOCK position. The cable tension in the nacelle is 30 pounds.

e. Check the latch handle for 3/8- to 1/2-inch spring-back in the POSITIVE LOCK position. This can be increased by loosening the turnbuckles on the LATCH RAISED cable and tightening the rear turnbuckle on the POSITIVE LOCK cable located beneath the flight compartment floor. (Adjust only the rear turnbuckle on the POSITIVE LOCK cable.) Tension of the cables in the SPRING LOCK position at this station is approximately 60 pounds.

f. Place the control handle in the SPRING LOCK position. Adjust the forward and aft turnbuckles on the positive lock cable so that the arm *(see figure 10-12)* on the torque tube is perpendicular to the floor of the compartment.

Note

Since there is a slight amount of free play in the SPRING LOCK position, place the handle in the forward portion of the free-play area while making this adjustment.

g. Place the landing gear control valve in the NEUTRAL position, and adjust the connecting rod to give 1/16-inch clearance between the dog and catch at the valve when the latch control handle is held fully back.

h. Release the latch handle and it will remain in the LATCH RAISED position. Check for a 3/32-inch clearance of the latches above the strut hook. (This can be seen with a small mirror and a flashlight.)

i. Pull forward on the knob of the latch dog at the landing gear control valve and the latches will release into the SPRING LOCK position. The latch handle will be positioned at an angle of approximately 30 degrees from the floor and the latches will be fully down in the guides.

j. On C-117 airplanes, place the latch handle fully down and clip it in the POSITIVE LOCK position. On C-47 airplanes, the safety solenoid will automatically engage the latch handle. It will then be impossible to force the latches up with a screwdriver or similar tool.

k. With the latch handle in the LATCH RAISED position, move the landing gear control valve to the DOWN position. The stop will prevent the dog from passing and will engage it by 1/16 inch *(see figure 10-13)*. Move the control valve back to the NEUTRAL position.

l. Check the relation of the faces of the valve shoe and valve catch *(see figure 10-13)*. Shift the washers at the catch to obtain proper operation.

10-38. BUNGEE.

10-39. The bungee, used on earlier airplanes, consists of six loops of elastic shock cord mounted on a forward yoke connected to the upper truss by a rod and an aft yoke mounted in the rear of the nacelle. The bungee cords are stretched by the extension of the landing gear and aid in balancing the weight of the landing gear. The bungee also assists the landing gear actuating cylinder to retract the landing gear.

10-40. REMOVAL OF BUNGEE.

a. Support the airplane on jacks.

b. Obtain the bungee spreader bar *(see figure 10-14)*.

WARNING

Extreme care must be taken when removing the bungee or serious injury to personnel and damage to the airplane will result.

10-34. REMOVAL OF MECHANICAL SAFETY LATCH SYSTEM.

a. Remove the bolts attaching the linkage to the catch and dog mechanism on the landing gear control valve.

b. Disassemble the turnbuckles and remove the cable controls.

c. Remove the latch and other components, as necessary, by removing the attaching bolts.

10-35. INSTALLATION OF MECHANICAL SAFETY LATCH SYSTEM.

a. Securely bolt all pulley brackets and components to the structure.

b. Install the control cables and turnbuckles. Safety the turnbuckles with lockwire.

c. Install the bolts attaching the linkage to the catch and dog mechanism on the landing gear control valve.

10-36. ADJUSTMENT OF LATCH GUIDE.

a. Position the hook on the landing gear actuating piston rod centered in the latch guide.

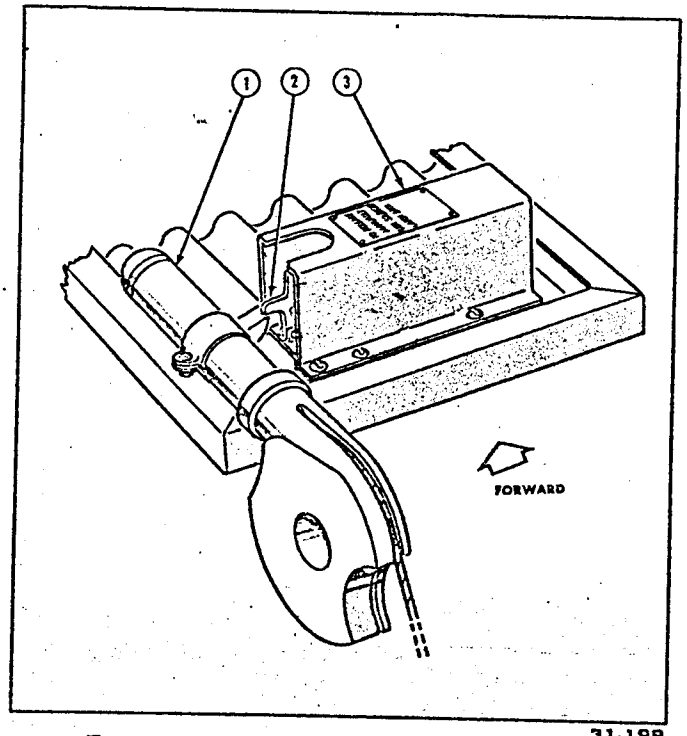

31,199

Figure 10-11. Mechanical Safety Latch Control Handle (C-117 Airplanes)

Key to Figure 10-11

Item	Nomenclature
1.	Safety Latch Control Handle
2.	Solenoid Catch
3.	Solenoid Cover

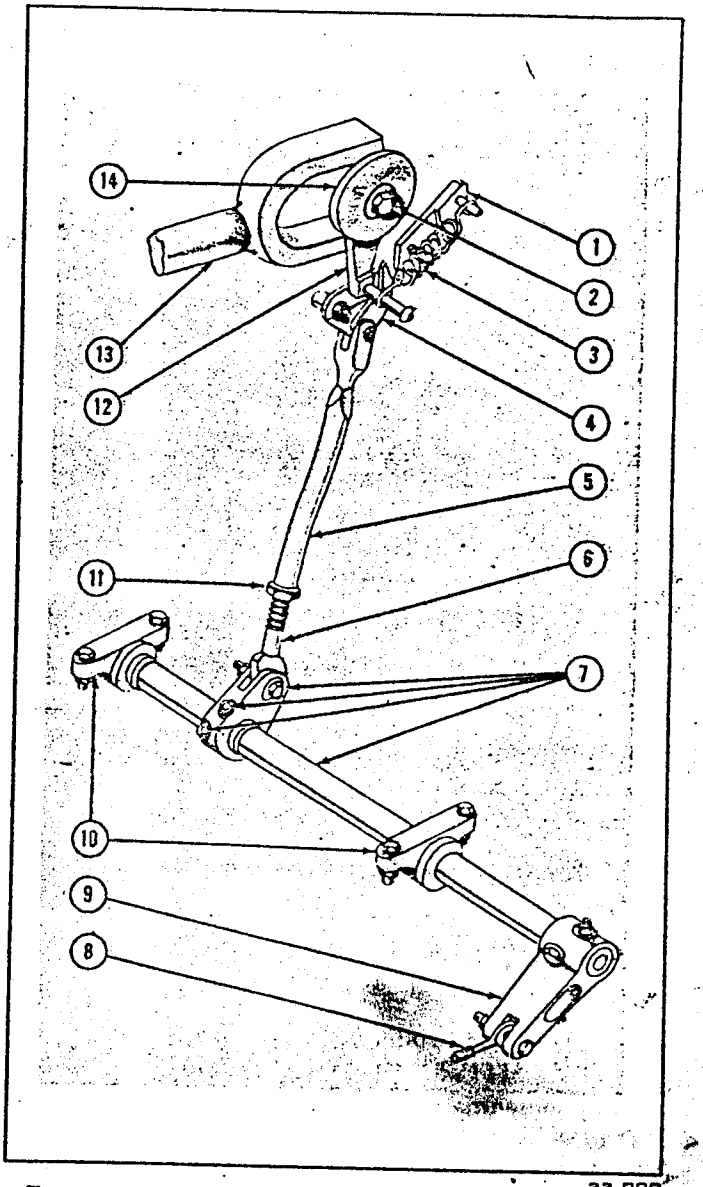

33,000

Figure 10-12. Mechanical Safety Latch—Torque Tube and Control Valve Mechanism

Key to Figure 10-12

Item	Nomenclature
1.	Shoe Assembly
2.	Cap Nut
3.	Spring
4.	Cam Assembly
5.	Connecting Rod
6.	Eyebolt Assembly
7.	Torque Tube Assembly
8.	Pin Eye — RH
9.	Arm
10.	Bearing Assembly
11.	Nut
12.	Dog Assembly
13.	Handle Assembly
14.	Bushing

b. The guide can be moved to the right or left by loosening the attaching nuts.

c. Any movement of the guide requires a similar movement in the latch mechanism. Oversize holes allow movement of the latch by loosening the attaching nuts.

d. To make further adjustment shift the position of the spacing washers between the hook and the landing gear upper truss. Follow closely all dimensions called for in figure 10-6.

e. Move the latch guide up or down to obtain the proper position with respect to the bottom face of the hook slot. The bottom face of the hook slot will be 1/64 to 1/32 inch below the face of the latch guide slots *(see figure 10-6)*.

10-37. ADJUSTMENT OF LATCH CONTROL SYSTEM.

a. Adjust all turnbuckles in the nacelles and fuselage area so that the threads are just covered.

b. Place latch control handle in the LATCH RAISED position and note the position of the latches in nacelles.

c. Adjust the nacelle cables until both latches are in the same position.

d. Release the latches to the SPRING LOCK position. The cable tension in the nacelle is 30 pounds.

e. Check the latch handle for 3/8- to 1/2-inch spring-back in the POSITIVE LOCK position. This can be increased by loosening the turnbuckles on the LATCH RAISED cable and tightening the rear turnbuckle on the POSITIVE LOCK cable located beneath the flight compartment floor. (Adjust only the rear turnbuckle on the POSITIVE LOCK cable.) Tension of the cables in the SPRING LOCK position at this station is approximately 60 pounds.

f. Place the control handle in the SPRING LOCK position. Adjust the forward and aft turnbuckles on the positive lock cable so that the arm *(see figure 10-12)* on the torque tube is perpendicular to the floor of the compartment.

Note

Since there is a slight amount of free play in the SPRING LOCK position, place the handle in the forward portion of the free-play area while making this adjustment.

g. Place the landing gear control valve in the NEUTRAL position, and adjust the connecting rod to give 1/16-inch clearance between the dog and catch at the valve when the latch control handle is held fully back.

h. Release the latch handle and it will remain in the LATCH RAISED position. Check for a 3/32-inch clearance of the latches above the strut hook. (This can be seen with a small mirror and a flashlight.)

i. Pull forward on the knob of the latch dog at the landing gear control valve and the latches will release into the SPRING LOCK position. The latch handle will be positioned at an angle of approximately 30 degrees from the floor and the latches will be fully down in the guides.

j. On C-117 airplanes, place the latch handle fully down and clip it in the POSITIVE LOCK position. On C-47 airplanes, the safety solenoid will automatically engage the latch handle. It will then be impossible to force the latches up with a screwdriver or similar tool.

k. With the latch handle in the LATCH RAISED position, move the landing gear control valve to the DOWN position. The stop will prevent the dog from passing and will engage it by 1/16 inch *(see figure 10-13)*. Move the control valve back to the NEUTRAL position.

l. Check the relation of the faces of the valve shoe and valve catch *(see figure 10-13)*. Shift the washers at the catch to obtain proper operation.

10-38. BUNGEE.

10-39. The bungee, used on earlier airplanes, consists of six loops of elastic shock cord mounted on a forward yoke connected to the upper truss by a rod and an aft yoke mounted in the rear of the nacelle. The bungee cords are stretched by the extension of the landing gear and aid in balancing the weight of the landing gear. The bungee also assists the landing gear actuating cylinder to retract the landing gear.

10-40. REMOVAL OF BUNGEE.

a. Support the airplane on jacks.

b. Obtain the bungee spreader bar *(see figure 10-14)*.

WARNING

Extreme care must be taken when removing the bungee or serious injury to personnel and damage to the airplane will result.

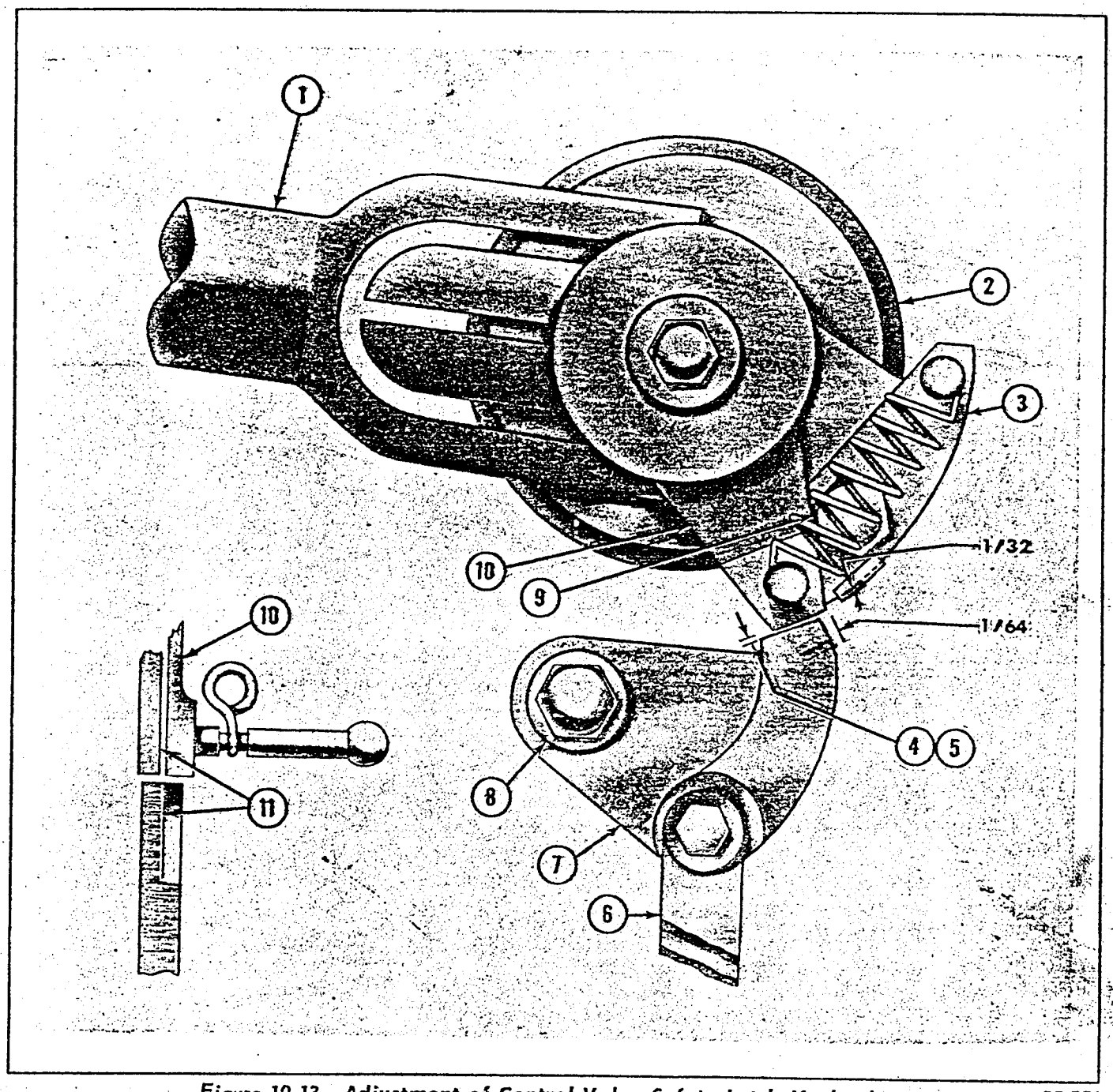

Figure 10-13. Adjustment of Control Valve Safety Latch Mechanism

33,001

Key to Figure 10-13

Item	Nomenclature	Item	Nomenclature
1.	Landing Gear Control Valve Handle Full Back in LATCH RAISED Position	6.	Rod — Adjust to Obtain Dimension Given in Items 4 & 5
2.	Landing Gear Control Valve	7.	Catch
3.	Shoe	8.	Washers — Use as Necessary to Obtain Dimensions Given in Item 11 For Faces of Catch and Shoe
4.	1/16 Inch — Measured when Latch Handle is Held Back in LATCH RAISED Position	9.	Flat Side of Bolt Head Must Engage Aft Side of Dog as Shown
5.	Stop Must Engage Dog by 1/16 Inch Minimum with Control Valve Handle in DOWN Position and Latch Handle in LATCH RAISED Position	10.	Dog
		11.	These Faces Must Be Flush Within 1/32 Inch

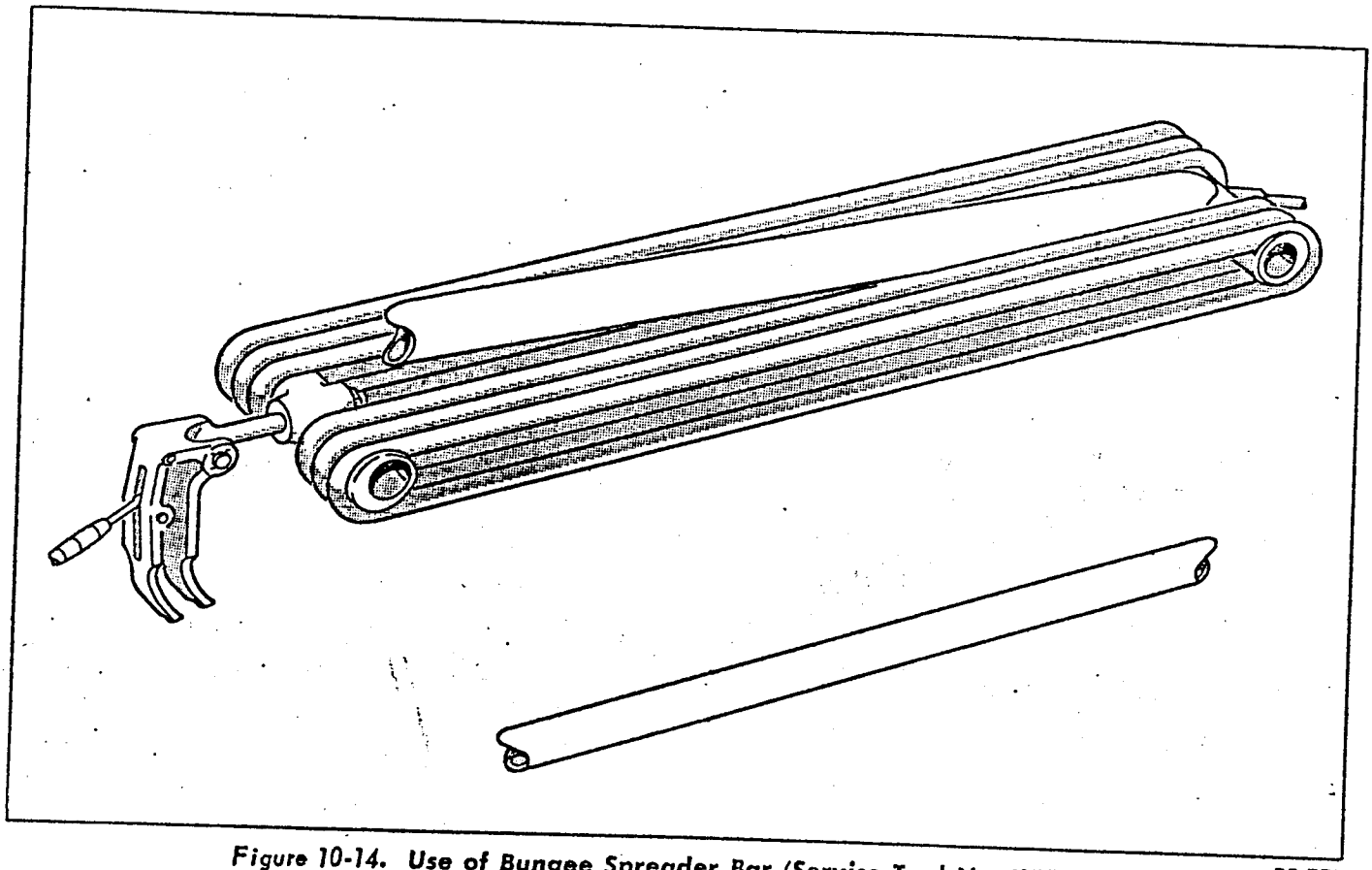

Figure 10-14. Use of Bungee Spreader Bar (Service Tool No. K51902)

33,002

c. Extend the landing gear.

d. Place one end of the bungee spreader bar on the center of the rear bungee yoke.

e. Reduce the hydraulic system pressure by operating the wing flaps.

f. Place the safety latch control handle in the LATCH RAISED position, and the landing gear control valve handle in the UP position.

g. Retract the gear slowly by operating the hydraulic hand pump until the forward end of the spreader bar engages the bungee forward yoke, relieving the tension on the bungee yokes *(see figure 10-15.)*

h. Place the landing gear control valve handle in the NEUTRAL position.

i. Remove the bolts attaching the bungee yokes and remove the spreader bar, shock cord, and the fitting as a unit *(see figure 10-16).*

CAUTION

Do not lower the gear without providing support after the bungee has been removed.

j. Use a chain hoist, hydraulic jack, or suitable power equipment to stretch the shock cords sufficiently to free the spreader bar *(see figure 10-17).*

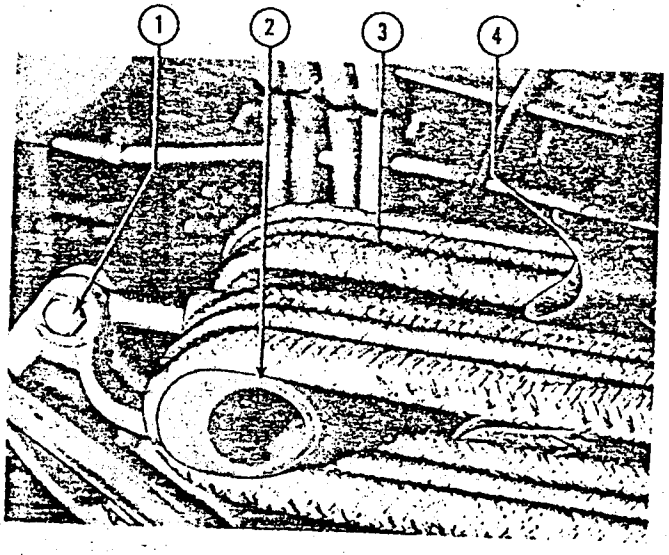

Figure 10-15. Bungee Spreader Bar in Place Before Retraction of Landing Gear

33,003

Key to Figure 10-15

Item	*Nomenclature*
1.	Bungee Forward Yoke Attaching Bolt
2.	Bungee Forward Yoke
3.	Bungee Shock Cords
4.	Bungee Spreader Bar

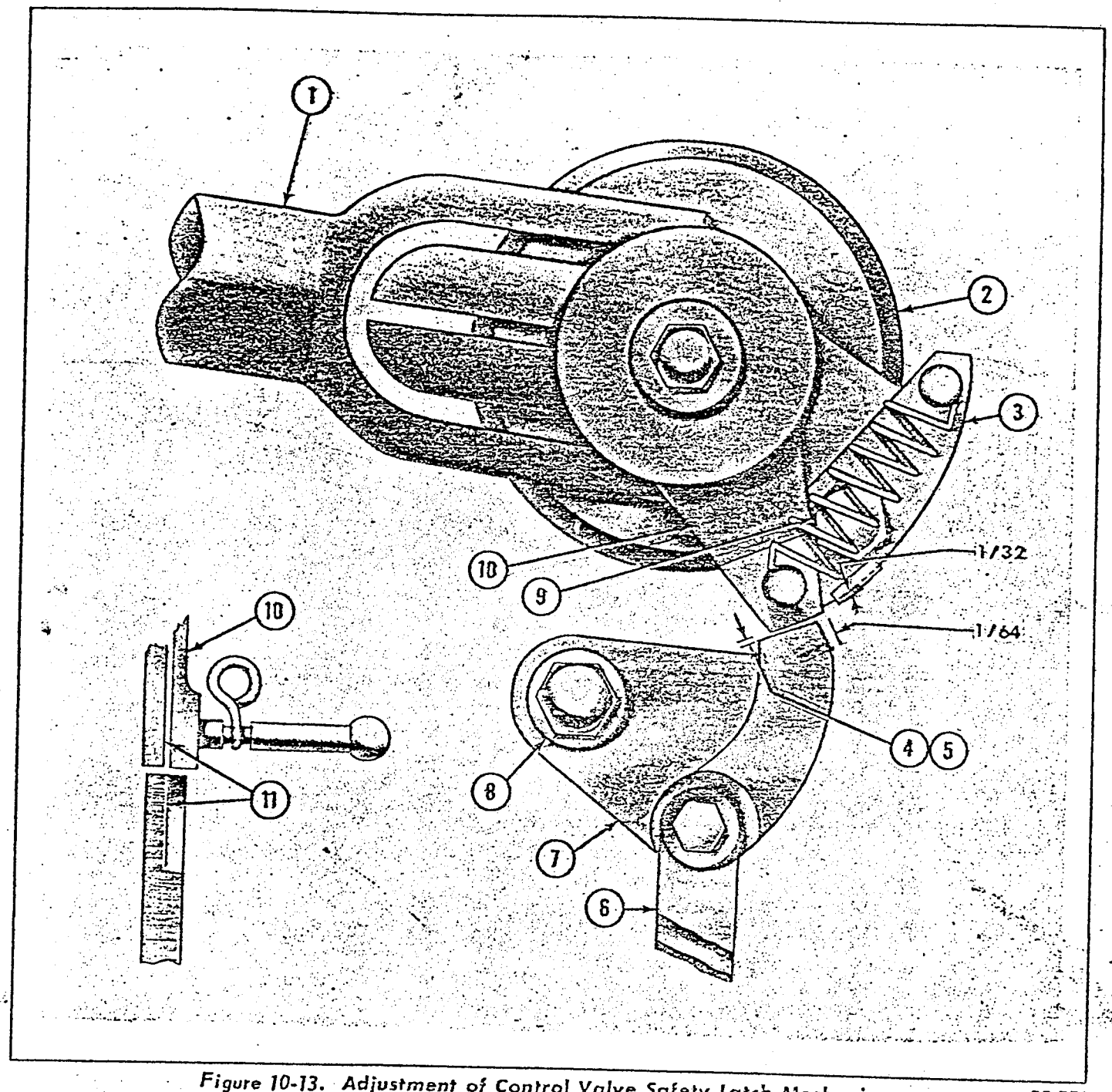

Figure 10-13. Adjustment of Control Valve Safety Latch Mechanism

33,001

Key to Figure 10-13

Item	Nomenclature
1.	Landing Gear Control Valve Handle Full Back in LATCH RAISED Position
2.	Landing Gear Control Valve
3.	Shoe
4.	1/16 Inch — Measured when Latch Handle is Held Back in LATCH RAISED Position
5.	Stop Must Engage Dog by 1/16 Inch Minimum with Control Valve Handle in DOWN Position and Latch Handle in LATCH RAISED Position
6.	Rod — Adjust to Obtain Dimension Given in Items 4 & 5
7.	Catch
8.	Washers — Use as Necessary to Obtain Dimensions Given in Item 11 For Faces of Catch and Shoe
9.	Flat Side of Bolt Head Must Engage Aft Side of Dog as Shown
10.	Dog
11.	These Faces Must Be Flush Within 1/32 Inch

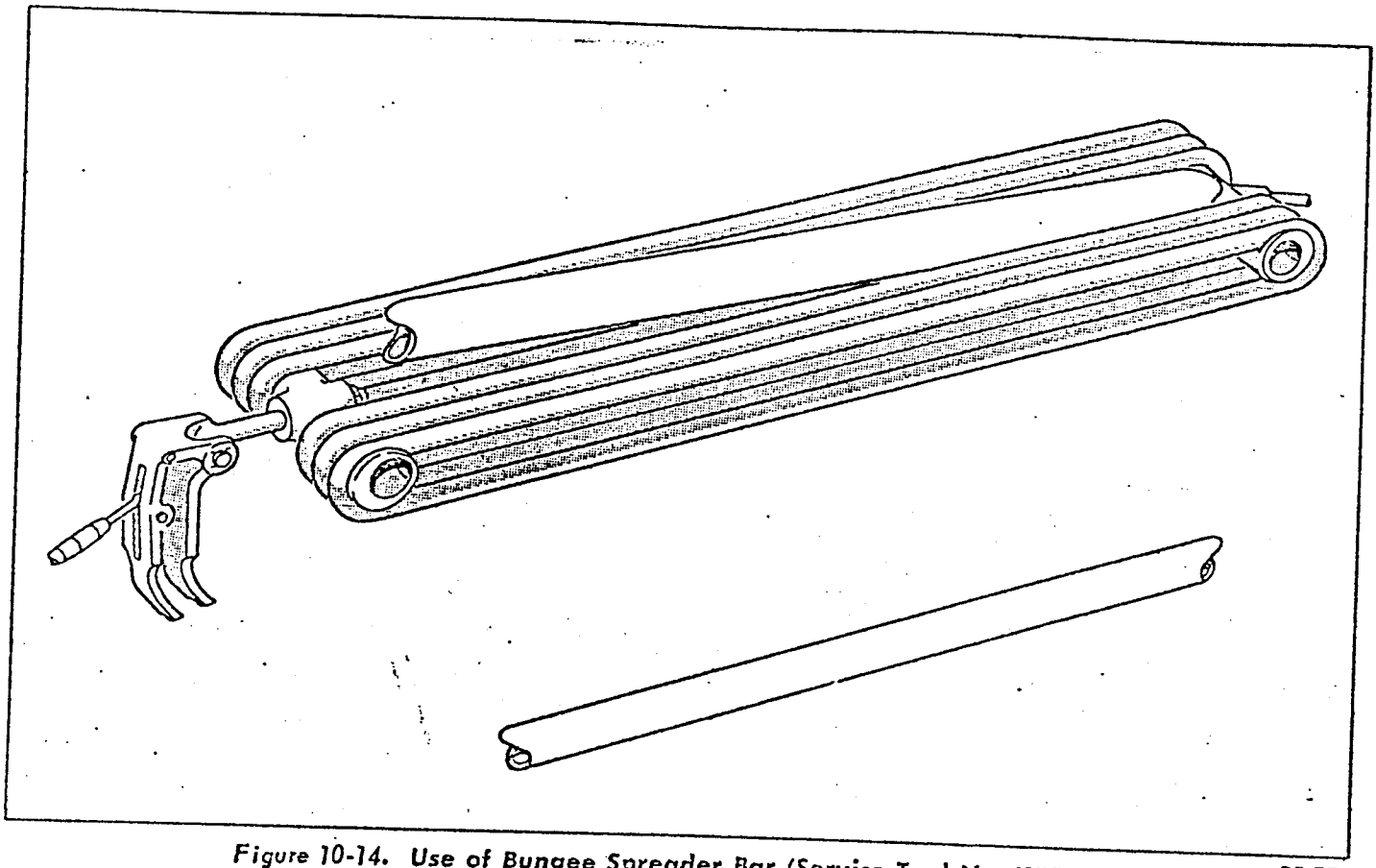

Figure 10-14. Use of Bungee Spreader Bar (Service Tool No. K51902)

33,002

c. Extend the landing gear.

d. Place one end of the bungee spreader bar on the center of the rear bungee yoke.

e. Reduce the hydraulic system pressure by operating the wing flaps.

f. Place the safety latch control handle in the LATCH RAISED position, and the landing gear control valve handle in the UP position.

g. Retract the gear slowly by operating the hydraulic hand pump until the forward end of the spreader bar engages the bungee forward yoke, relieving the tension on the bungee yokes *(see figure 10-15.)*

h. Place the landing gear control valve handle in the NEUTRAL position.

i. Remove the bolts attaching the bungee yokes and remove the spreader bar, shock cord, and the fitting as a unit *(see figure 10-16).*

CAUTION

Do not lower the gear without providing support after the bungee has been removed.

j. Use a chain hoist, hydraulic jack, or suitable power equipment to stretch the shock cords sufficiently to free the spreader bar *(see figure 10-17).*

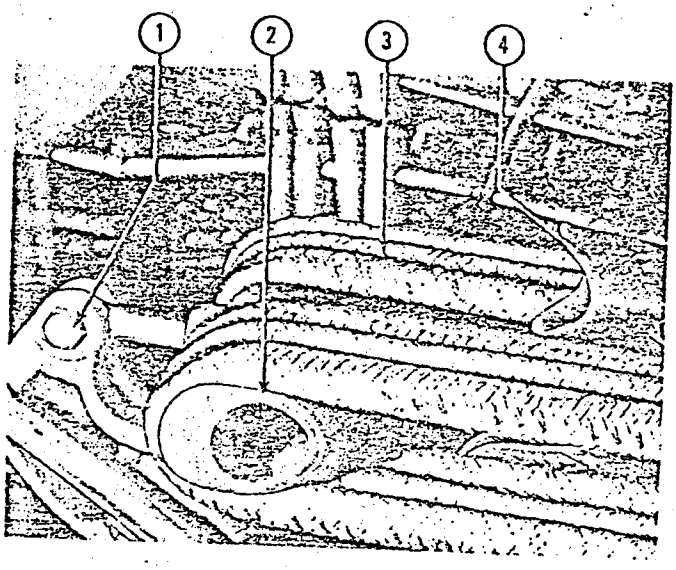

Figure 10-15. Bungee Spreader Bar in Place Before Retraction of Landing Gear

33,003

Key to Figure 10-15

Item	*Nomenclature*
1.	Bungee Forward Yoke Attaching Bolt
2.	Bungee Forward Yoke
3.	Bungee Shock Cords
4.	Bungee Spreader Bar

k. Relieve the tension on the shock cords, and remove them from the yokes and fittings.

10-41. INSTALLATION OF BUNGEE.

a. Position the bungee cords over the yokes.

b. Use a chain hoist, hydraulic jack, or suitable power equipment to stretch the shock cords, and insert the spreader bar *(see figure 10-14)*.

c. Position the bungee unit and install the bolts, attaching the yokes.

d. Place the landing gear control valve handle in the DOWN position, and extend the gear to the full down position by operating the hydraulic hand pump.

Note

Support the spreader bar as the gear extends.

CAUTION

Do not allow gasoline or oil to contact the bungee cords, when servicing in the nacelle areas.

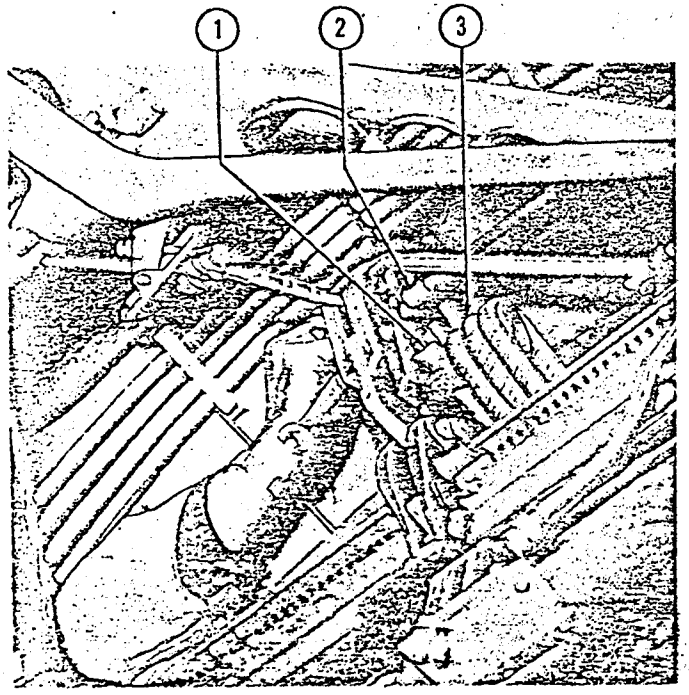

33,005

Figure 10-16. Removing Bolt from Bungee Forward Yoke

Key to Figure 10-16

Item	*Nomenclature*
1.	Bungee Forward Yoke
2.	Socket Wrench
3.	Bungee Elastic Shock Cords

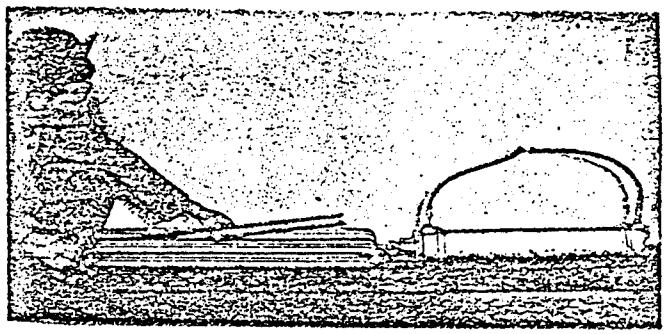

33,004

Figure 10-17. Spreading Bungee with Hydraulic Jack

10-42. HYDRAULIC COMPENSATOR.
(See figure 10-18.)

10-43. On later airplanes, the landing gear bungee has been replaced by a hydraulic compensator to provide faster retraction of the landing gear. The compensator is a hydraulic cylinder, bolted to a bracket located on the wing front spar, with the cylinder piston rod attached to the landing gear upper truss. A flexible hose connects the lower end of the compensator to the landing gear hydraulic UP piping.

10-44. REMOVAL OF HYDRAULIC COMPENSATOR.

a. Install the ground safety locks.

b. Relieve the hydraulic system pressure by operating the wing flaps.

c. Disconnect and cap the flexible hose from the compensator cylinder.

d. Remove the attaching bolts and the cylinder.

10-45. INSTALLATION OF HYDRAULIC COMPENSATOR.

a. Position the compensator cylinder and install the two bolts.

b. Connect the flexible hose to the cylinder.

10-46. ADJUSTMENT OF HYDRAULIC COMPENSATOR.

a. Lengthen or shorten bolt D *(see figure 10-19)* until a minimum of $\frac{1}{16}$ inch is obtained at B, and C.

b. Secure bolt D *(see figure 10-19)* with the lock nut.

c. Remove the bolt attaching the compensator piston rod to the upper truss. Check the piston rod for $\frac{1}{8}$-inch overtravel which is required to prevent bottoming of the piston.

d. In the fully retracted position, the forward travel of the compensator cylinder is approximately 11 inches. In this position, check A *(see figure 10-19)* for $\frac{1}{8}$-inch minimum clearance between the cylinder upper end and the vacuum line assembly located in the upper nacelle.

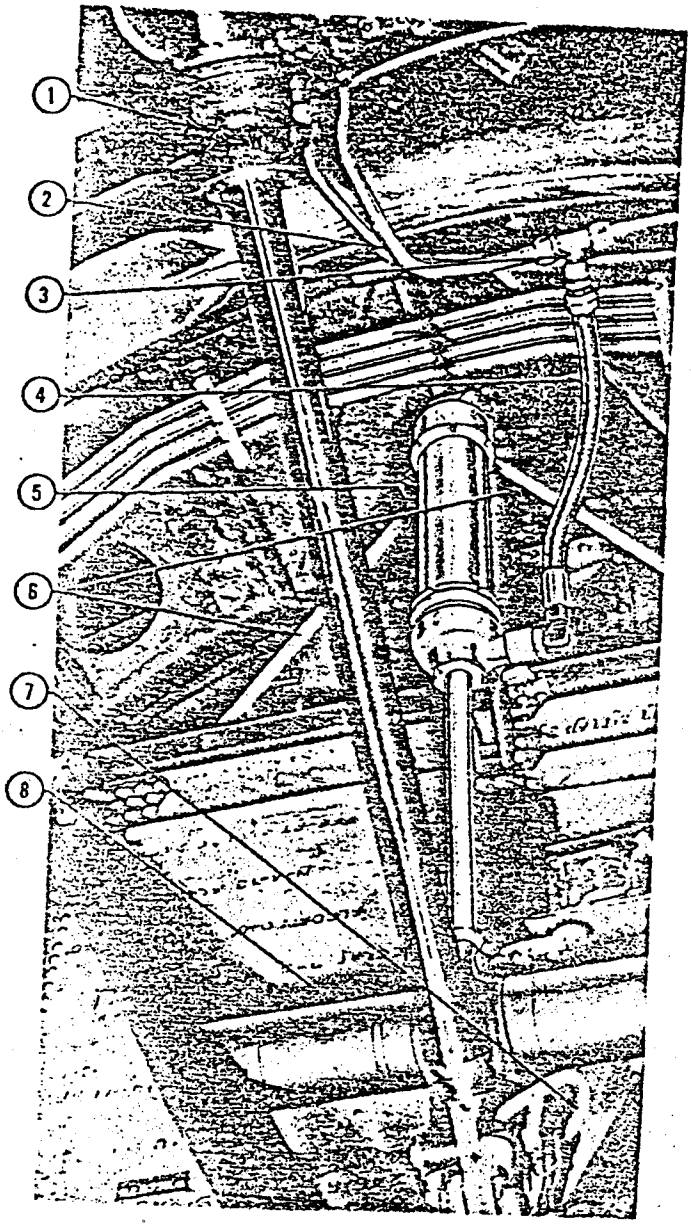

Figure 10-18. Landing Gear Hydraulic Compensator 33,006

Key to Figure 10-18

Item	*Nomenclature*
1.	Landing Gear Actuating Cylinder
2.	Landing Gear Up Piping
3.	Tee
4.	Flexible Hose
5.	Hydraulic Compensator Cylinder
6.	Braces
7.	Ground Safety Pin
8.	Landing Gear Upper Truss

e. Install the bolt attaching the piston rod to the upper truss.

10-47. LANDING GEAR POSITION INDICATING AND WARNING SYSTEM. The landing gear position indi-

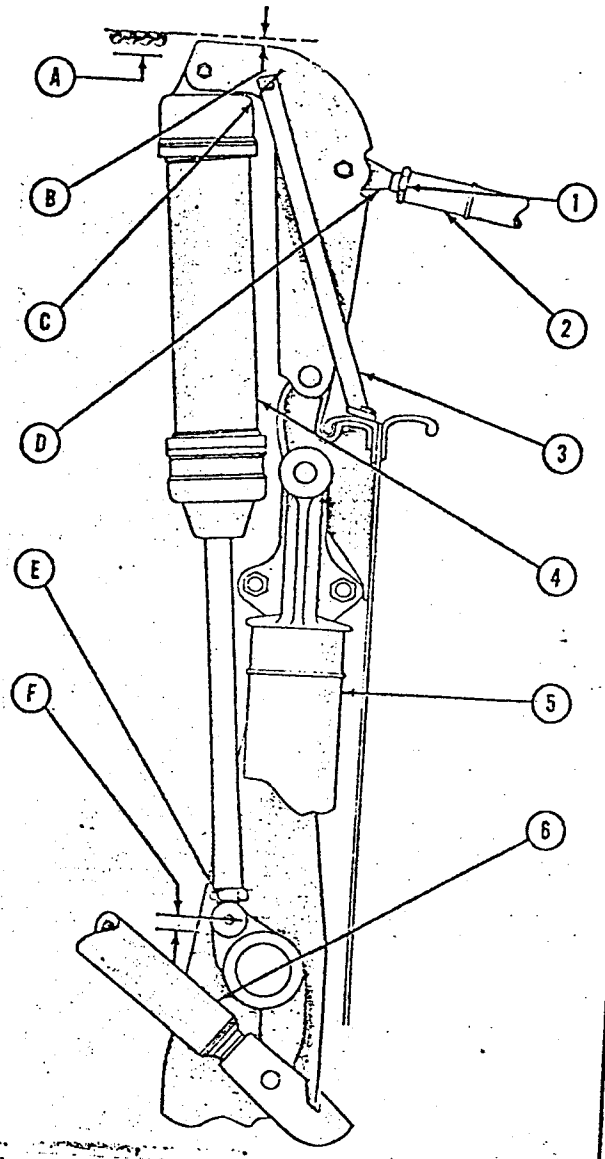

Notes:

A. 1/8-inch minimum clearance between vacuum lines in nacelle and cylinder cap when the landing gear is fully retracted.

B. 1/16-inch minimum clearance.

C. 1/16-inch minimum clearance.

D. Bolt.

E. Piston rod end-compensator cylinder.

F. 1/8-inch overtravel of compensator piston rod.

Figure 10-19. Landing Gear Hydraulic Compensator Adjustment 33,007

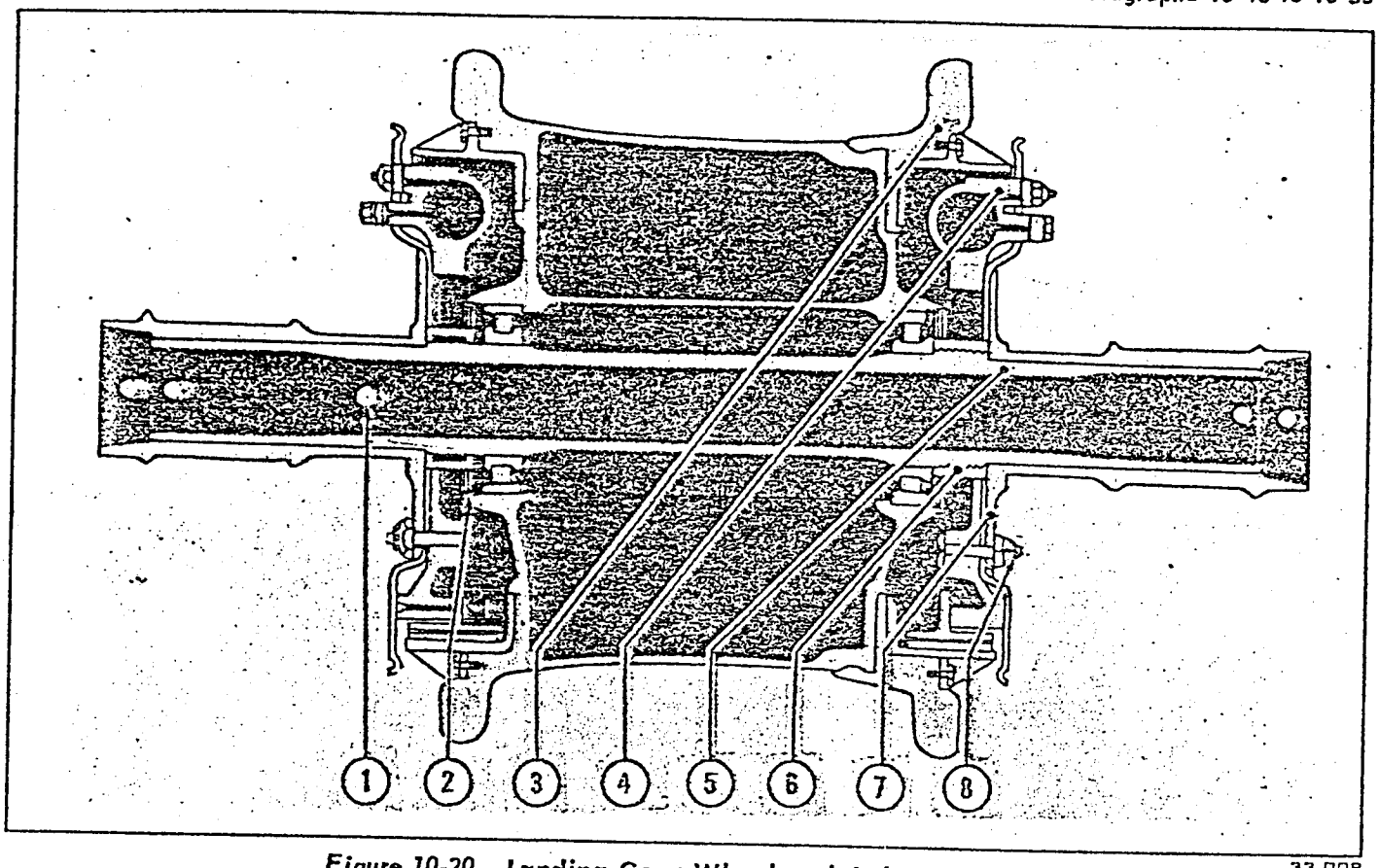

Figure 10-20. Landing Gear Wheel and Axle Assembly

33,008

Key to Figure 10-19

Item	Nomenclature
1.	Lock Nut
2.	Rod Assembly
3.	Brace — Install Square Ends Up
4.	Landing Gear Hydraulic Compensator Cylinder
5.	Landing Gear Upper Truss
6.	Landing Gear Actuating Cylinder Piston Rod

Key to Figure 10-20

Item	Nomenclature
1.	Bolt, Washer, Nut, and Cotter
2.	Washers (use as necessary to center wheel)
3.	Wheel
4.	Duo-Servo Brake
5.	Axle Assembly
6.	Adjusting Collar (Axle Nut), Collar Retaining Screw and Lockwasher
7.	Brake Torque Collar
8.	Bolt, Nut, Washer, and Cotter

cating and warning system consists of the landing gear control valve, landing gear indicator lights, and the landing gear warning horn.

10-48. LANDING GEAR CONTROL VALVE.

10-49. The landing gear control valve, located on the hydraulic control panel, is a 3-position, 4-port valve. Placarded positions for control are DOWN, NEUTRAL, and UP.

10-50. REMOVAL OF LANDING GEAR CONTROL VALVE.

a. Relieve the hydraulic system pressure by operating the wing flaps.

b. Disconnect and cap the hydraulic piping.

c. Remove the cotter pin, nut, and bolt attaching the landing gear safety latch assembly to the control valve.

d. Remove the four attaching bolts and the valve.

10-51. INSTALLATION OF LANDING GEAR CONTROL VALVE.

a. Install the control valve on the control panel with the four attaching bolts.

b. Position the safety latch assembly and install the bolt, nut, and cotter pin.

c. Connect the hydraulic piping to the control valve.

10-52. LANDING GEAR INDICATOR LIGHTS.

10-53. The landing gear indicator lights are located on the right side of the main instrument panel. The green light will illuminate when both main landing gears are down and locked and the control lever is in

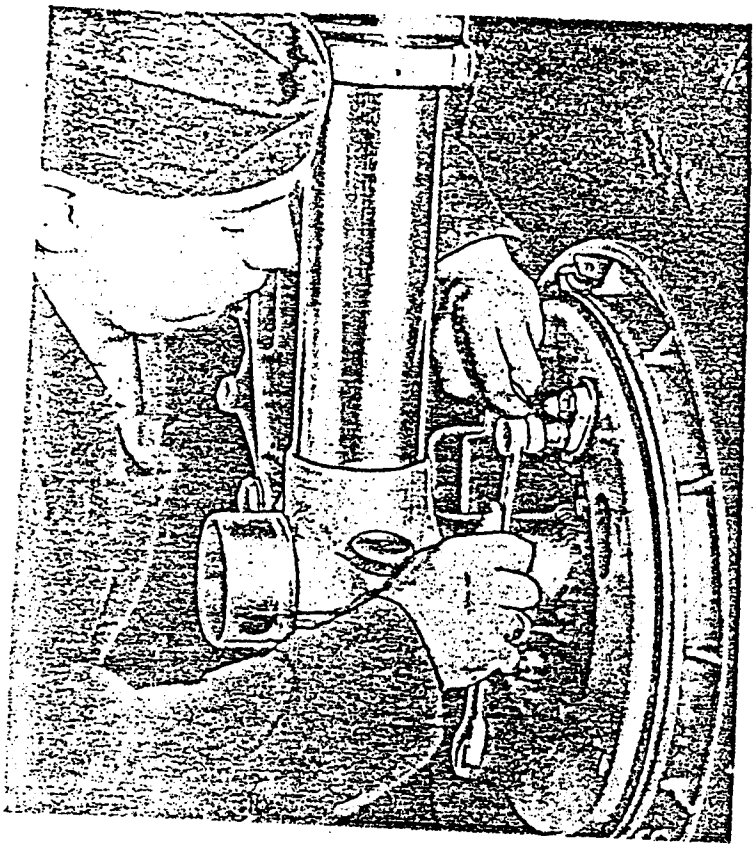

Figure 10-21. Brake Hydraulic Hose Connection 33,009

the NEUTRAL position. The red light will illuminate when the gear or control lever is in any other position.

10-54. REMOVAL AND INSTALLATION OF LANDING GEAR INDICATOR LIGHTS. For removal and installation of the landing gear indicator lights, refer to Section VIII.

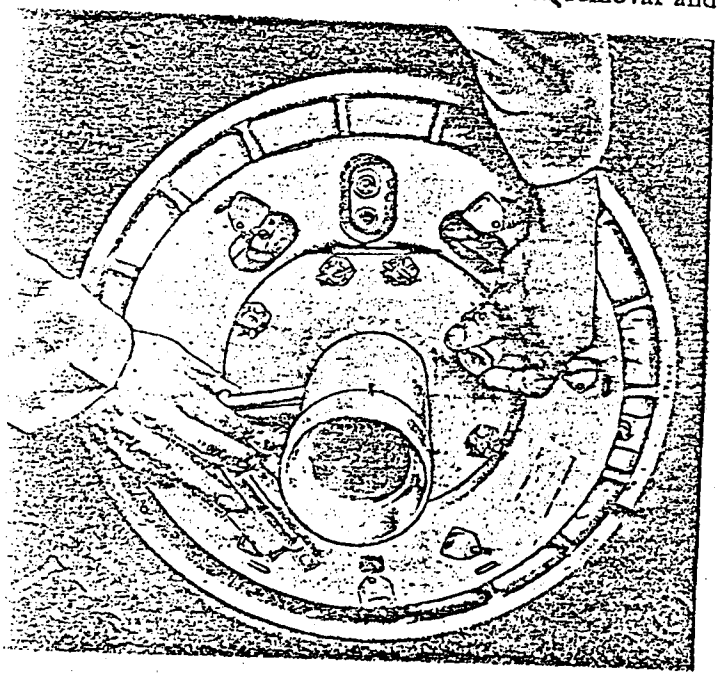

Figure 10-22. Removing Brake Torque Collar Attaching Bolts. 33,010

10-55. LANDING GEAR WARNING HORN.

10-56. The landing gear warning horn, located in the flight compartment to the left of the pilot's seat, will sound when one or both throttles are positioned less than approximaely one-quarter open and the gear is not down and locked.

10-57. REMOVAL AND INSTALLATION OF LANDING GEAR WARNING HORN. For removal and installation of the landing gear warning horn, refer to Section VIII.

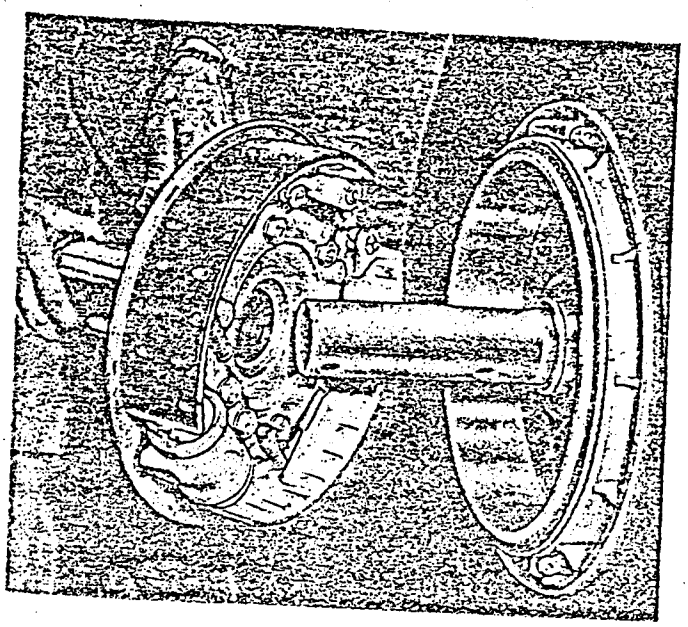

Figure 10-23. Removing Torque Collar and Brake Assembly from Axle 33,011

10-58. ADJUSTMENT OF LANDING GEAR WARNING HORN.

a. Turn the master battery switch ON.

b. Move both throttle controls to the closed position.

c. Move the landing gear control lever to the DOWN position. If the warning horn fails to sound, refer to Section VIII for trouble shooting and adjustment procedures.

10-59. WHEELS AND AXLES.
(See figure 10-20.)

10-60. The main landing gear wheels, interchangeable right and left, are the flat-base, rim type cast from aluminum alloy. The wheel consists of four major parts: the wheel assembly, the demountable rim flange, the brake drums, and the axle assembly. The split-type demountable rim flange is attached to the wheel casting by a key and special locking bolts.

10-61. REMOVAL OF WHEELS AND AXLES.

a. Support the airplane on jacks.

b. Reduce the hydraulic system pressure by operating the wing flaps.

c. Place the safety latch control handle in the LATCH RAISED position and the landing gear control valve handle in the UP position.

d. Close the shutoff valve from the hand pump to the pressure accumulator.

e. Retract the gear approximately 6 inches by operating the hydraulic hand pump.

f. Return the landing gear control handle to NEUTRAL.

g. Disconnect and cap the flexible hydraulic hoses from the brake actuating cylinders *(see figure 10-21).*

h. Remove the axle bolts and clamps.

i. Roll the wheel and axle assembly clear of the shock struts.

10-62. INSTALLATION OF WHEELS AND AXLES.

a. Roll the wheel and axle assembly into position.

b. Install the axle clamps and bolts.

c. Connect the flexible hydraulic hoses to the brake actuating cylinders.

d. Bleed the brakes as outlined in paragraph 10-80.

e. Open the shutoff valve from the hand pump to the pressure accumulator.

f. Return the landing gear control valve handle to the DOWN position, and the safety latch control handle to the POSITIVE LOCK position.

g. Be sure that the ground safety locks are installed before removing the jacks.

CAUTION

Make certain that the keys in the shock strut piston clamps are engaged in the keyways in the brake torque collars. These keys transmit the breaking torque and if they are not in place complete failure of the brakes will result.

10-63. REMOVAL OF WHEELS FROM AXLES.

a. Remove the brake torque collar bolts *(see figure 10-22).*

b. Slide each brake and torque collar assembly from the axle *(see figure 10-23).*

c. Cut the safetywire and remove the lockscrew from the main axle nut *(see figure 10-24).*

d. Loosen the axle nut, using service tool No. K20101 *(see figure 10-25).*

e. Remove the axle nut as shown in figure 10-26.

f. Slide the axle out of the wheel *(see figure 10-27).*

Note

Whenever the wheels are removed from the airplane, the wheel bearings should be cleaned, inspected, and re-lubricated.

10-64. REMOVAL OF WHEEL BEARINGS.

a. Remove the snap retaining ring *(see figure 10-29.)*

b. Lift out the grease retainers and the bearing assembly *(see figure 10-28).*

c. Clean the wheel bearings with solvent, Federal Specification P-S-661, and dry with compressed air.

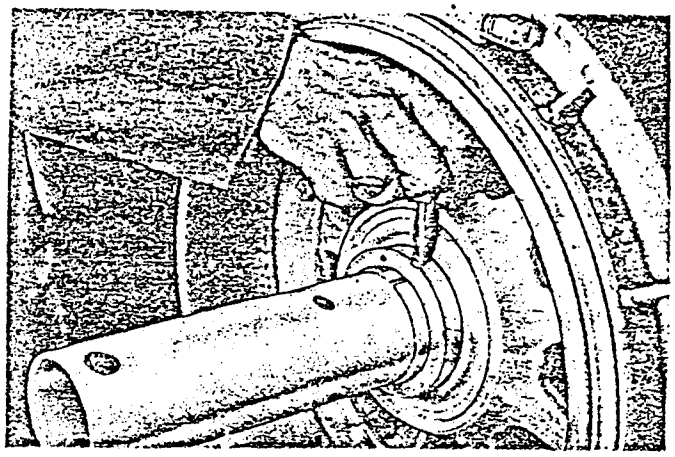

Figure 10-24. Removing Main Landing Gear Axle Nut Lockscrew M-7

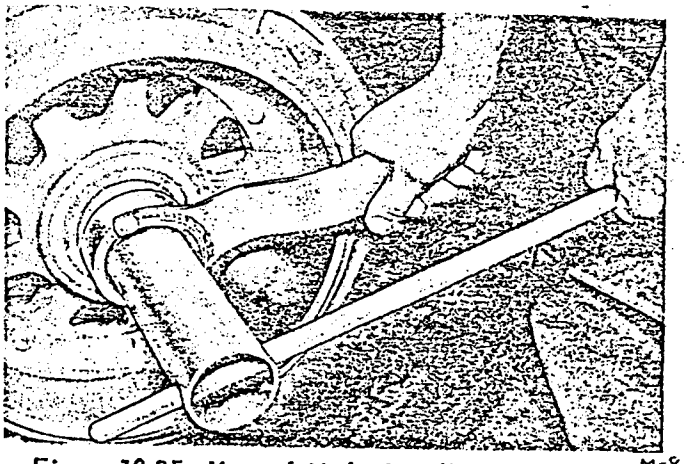

Figure 10-25. Use of Main Landing Gear Axle Nut Wrench (Service Tool No. K20101) M-8

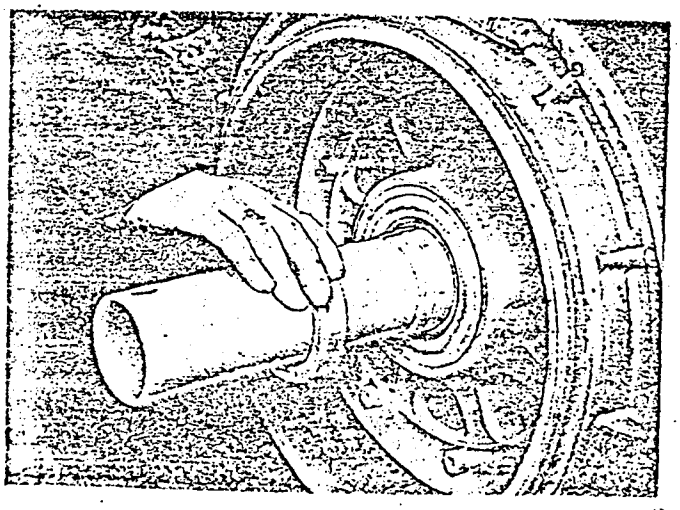

Figure 10-26. Removal of Axle Nut M-9

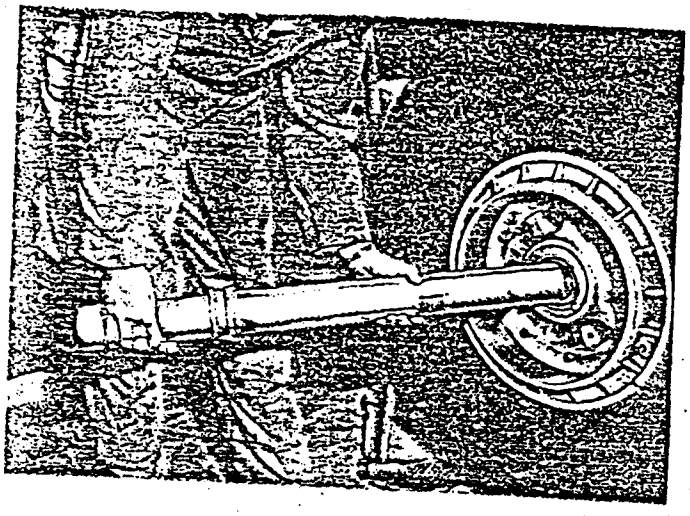

33,015
Figure 10-27. Removing Axle from Wheel

10-65. INSTALLATION OF WHEEL BEARINGS.

a. Pack the bearing with grease, Specification MIL-G-25760, by forcing the grease into and around the rollers and the cone.

b. Install the bearing, grease retainer washer, felt grease retainer, felt washer, and secure them with the snap retaining ring.

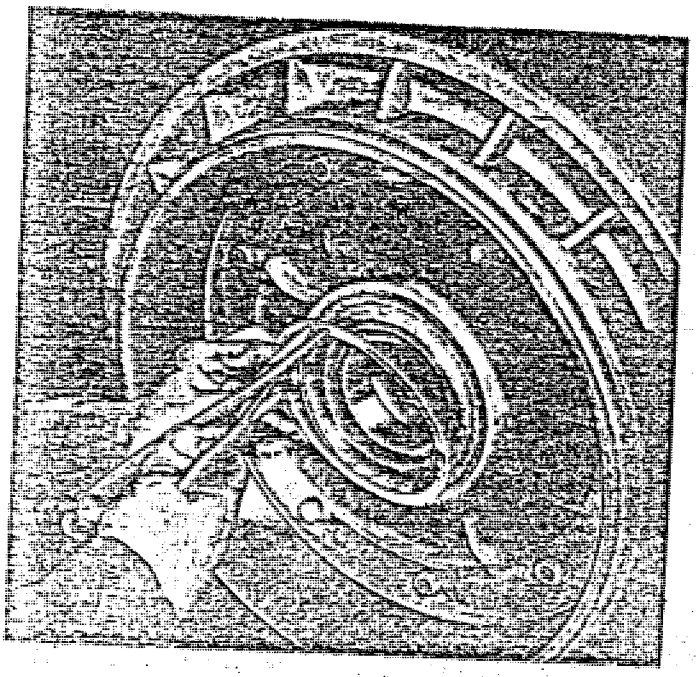

33,016
Figure 10-28. Removing Bearing Retaining Snap Ring

10-66. INSTALLATION OF WHEELS ON AXLES.

a. Install three 1/32-inch spacers between the fixed axle collar and the wheel.

b. Mount the wheel and bearing assembly on the axle with the fixed end of the wheel against the fixed axle collar.

c. Install the lockwasher and axle nut.

d. Tighten the axle nut until a slight bearing drag is noticed while slowly turning the wheel by hand.

e. Back off the nut until the wheel turns freely without bearing drag.

Note

Check the wheel for sideplay after making the preceding adjustment.

f. Tighten the axle nut setscrew and safety it with lockwire.

g. Place both brake and brake torque collar assemblies in position on the axle.

Note

If the spacing between the dust cover and the edge of the brake drum is less than 3/32 inch, or more than 3/16 inch, disassemble the wheel and axle and add or remove 1/32-inch shims as required.

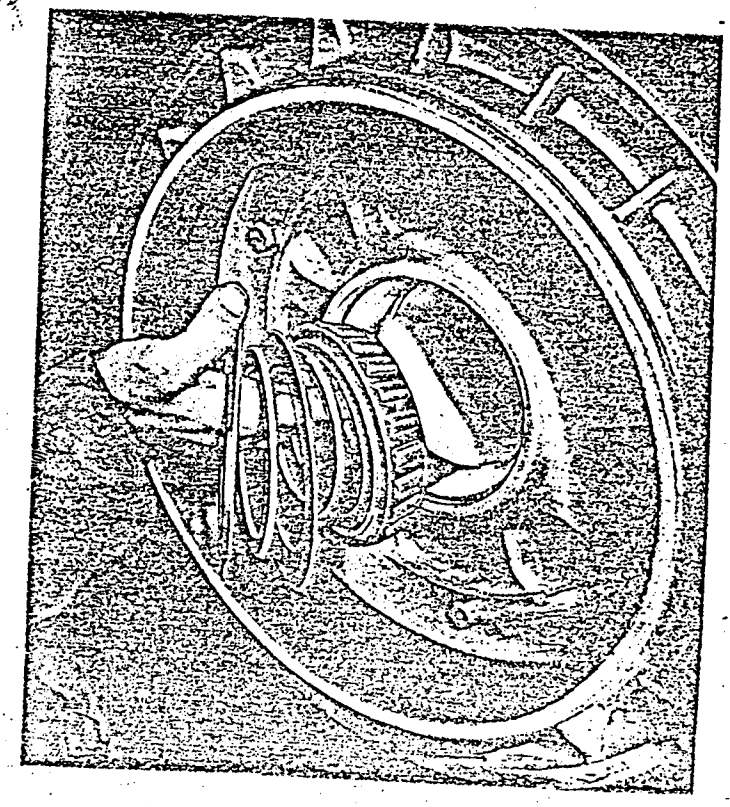

33,017
Figure 10-29. Removing Wheel Bearing and Grease Retainers

10-67. BRAKE ASSEMBLIES.
(See figure 10-30.)

10-68. Hydraulically actuated dual brakes are installed on each main landing gear wheel. Each brake is bolted to a brake torque collar which is bolted to the wheel. Brake operating pressure can be applied independently, or simultaneously, by toe pressure on the rudder brake pedals.

Key to Figure 10-30

Item	*Nomenclature*
1.	Brake Shoe
2.	Brake Shoe Pulldown Spring
3.	Brake Shoe Holddown Spring Assembly
4.	Attaching Bolt – Brake Spider and Torque Collar
5.	Balance Spring and Star Wheel Adjusting Screw
6.	Brake Spider
7.	Major Adjusting Screw
8.	Brake Actuating Cylinder
9.	Brake Shoe Return Spring

10-69. REMOVAL OF BRAKE ASSEMBLY.

a. Remove the wheels and axles as outlined in paragraph 10-61.

b. Remove the balancing spring as shown in figure 10-31.

c. Strike the right brake shoe *(see figure 10-32)* to obtain clearance for removing the left shoe holddown spring.

d. Remove the left holddown spring *(see figure 10-33)*.

e. Strike the left brake shoe and remove the right holddown spring.

f. Remove the brake shoe pulldown springs *(see figure 10-34)*.

g. Lift the brake shoes *(see figure10-35)* and collapse the shoe ring *(see figure 10-36.)*

h. Remove the brake shoes *(see figure10-37)*, and the anchor caps will drop free.

i. Remove the actuating piston and cup assemblies *(see figure 10-38)*.

Note

Protect the brake cylinder during and after removal and installation to prevent the entrance of foreign objects.

10-70. INSTALLATION OF BRAKE ASSEMBLY.

a. Open the brake bleeder valve.

b. Install the piston and cup assemblies in the brake cylinder *(see figure 10-39)*.

c. Install the anchor caps and brake shoes *(see figure 10-40)* on the torque spider.

d. Extend and force down the show ring *(see figures 10-41 and 10-42)*.

e. Install the brake shoe pulldown springs *(see figure 10-43)*.

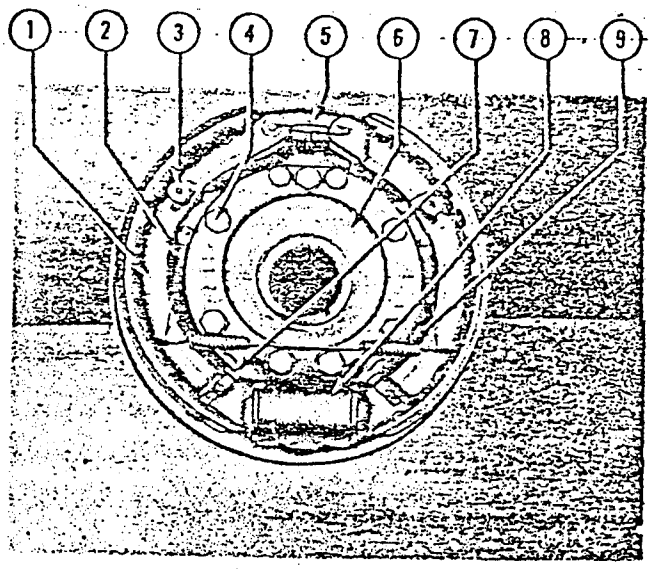

Figure 10-30. Brake Assembly Complete 33,018

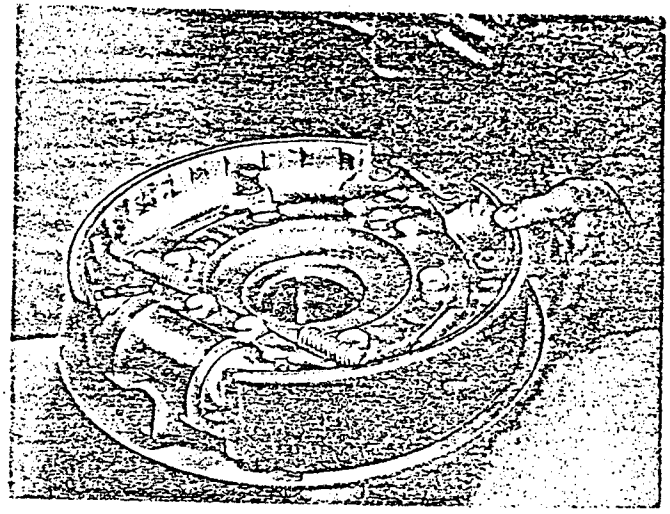

Figure 10-31. Removing Brake Shoe Balancing Spring 33,019

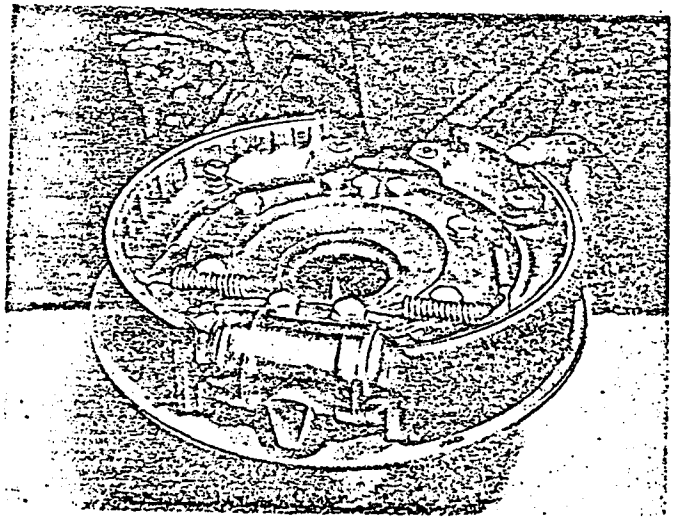

Figure 10-32. Striking Right Brake Shoe 33,020

f. Install the brake shoe holddown springs *(see figure 10-44).*

g. Place the balancing spring on the brake shoes.

10-71. ADJUSTMENT OF BRAKE ASSEMBLIES.

a. Place short jacks under the main wheel axles of the airplane.

b. Rotate the star wheel *(see figure 10-45)* until the brake is dragging.

Note

The desired brake clearance is 0.010 inch. This clearance must be uniform and equal at all four slots.

c. Set the tentative equal clearance of 0.010 inch at slots S and Z by adjustment of the major adjusting screws *(see figure 10-45).*

d. Rotate the star wheel until the 0.010-inch dimension is met at slots A, B, S, and Z.

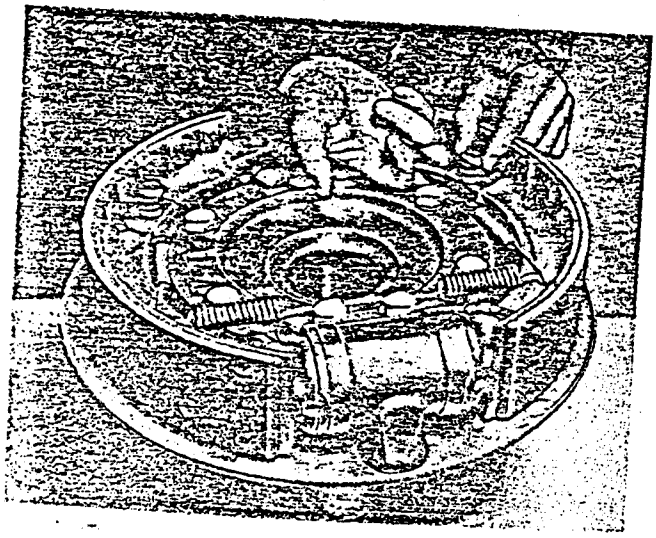

Figure 10-33. Removing Brake Shoe Holddown Spring 33,021

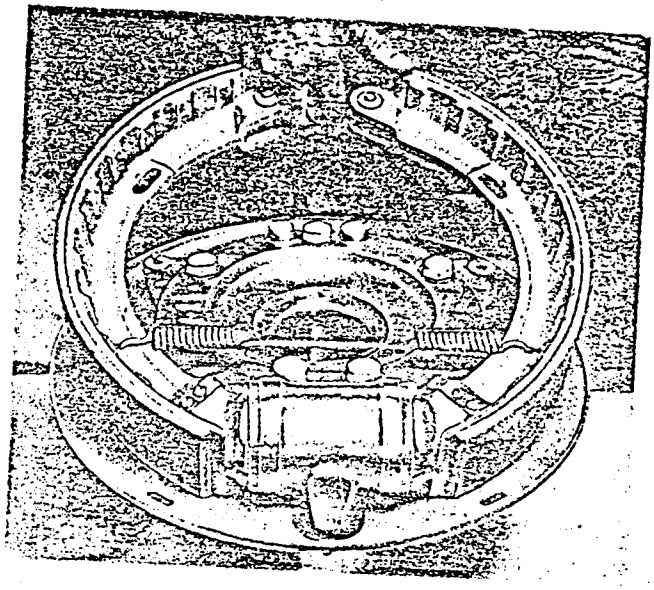

Figure 10-35. Lifting Brake Shoes 33,023

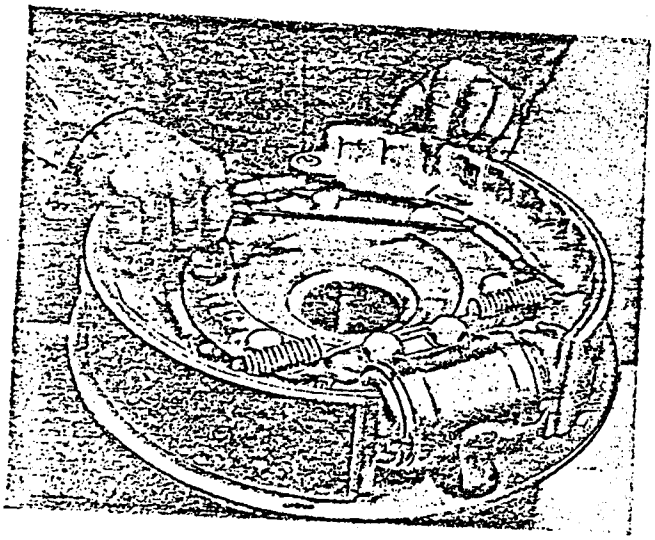

Figure 10-34. Removing Brake Shoe Pulldown Spring 33,022

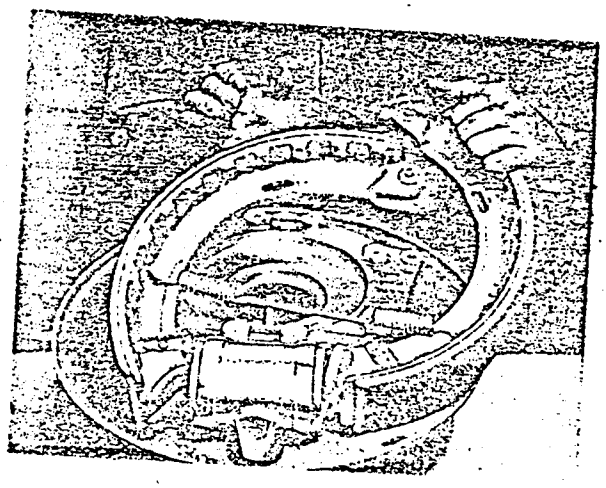

Figure 10-36. Collapsing Brake Shoes 33,024

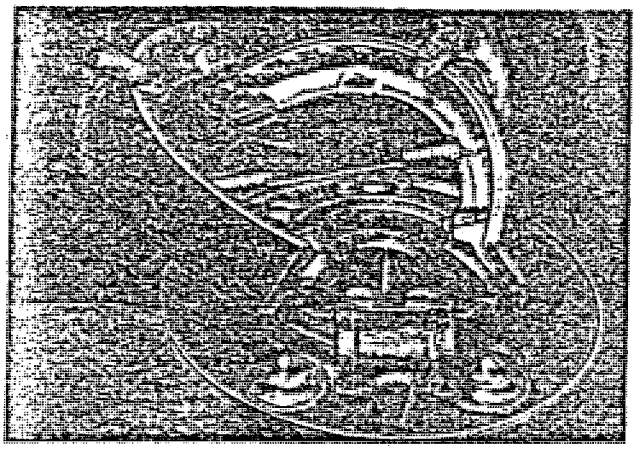

33,025

Figure 10-37. Removing Brake Shoes

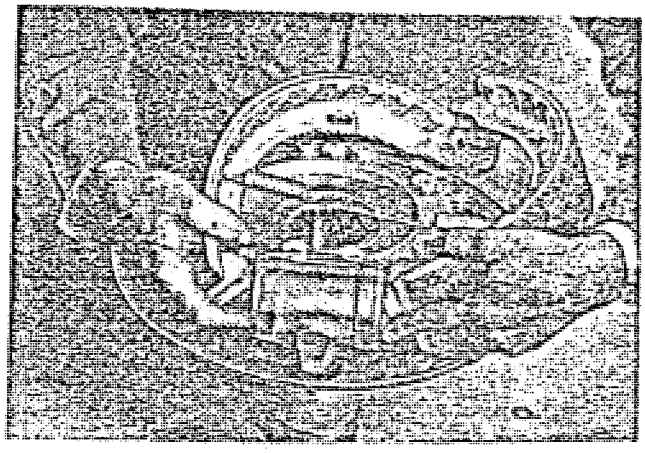

33,028

Figure 10-40. Installing Brake Shoes on Spider

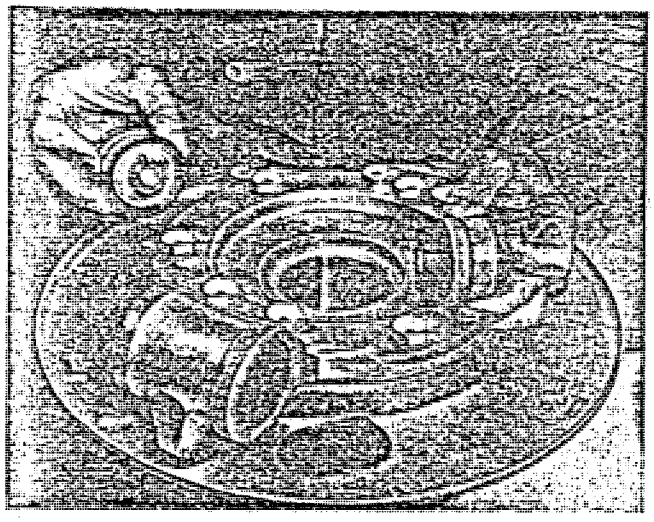

33,026

Figure 10-38. Removing Brake Actuating Pistons

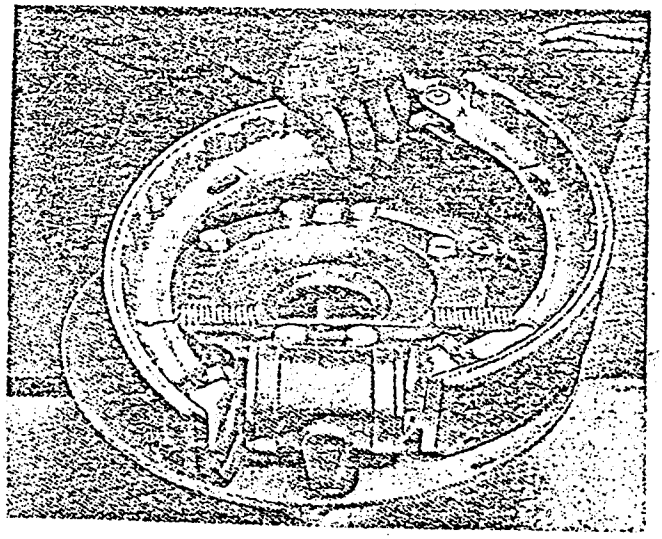

Figure 10-41. Extending Brake Shoes

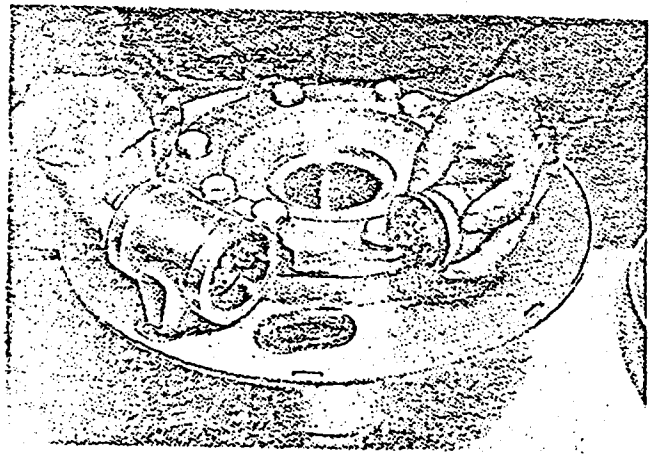

33,027

Figure 10-39. Installing Piston and Cup Assemblies

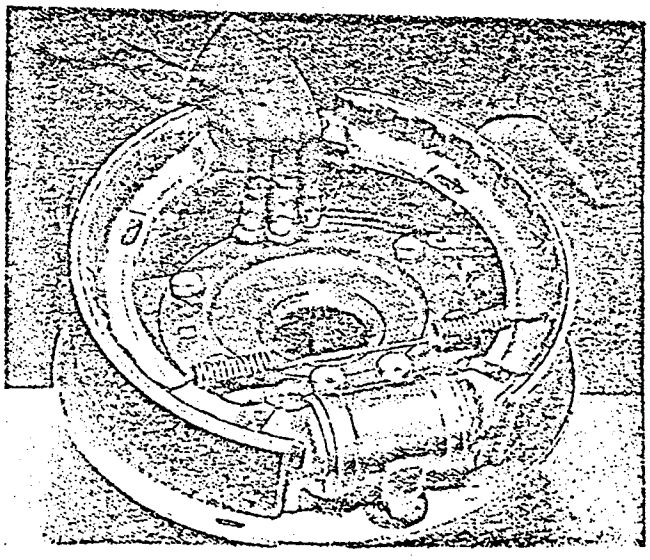

Figure 10-42. Installing Brake Shoe Ring

10-72. ADJUSTMENT OF RUDDER BRAKE PEDAL. For adjustment of the rudder brake pedal refer to figure 3-62.

10-73. BLEEDING OF BRAKES.

Note

Keep the free end of the bleeder hose submerged in hydraulic fluid during the entire bleeding operation and until after the bleeder valve has been closed to prevent air being drawn back into the hydraulic system piping.

a. Fill the hydraulic fluid reservoir to the proper level.

b. Remove the screw from the bleeder fitting on both the inboard and outboard brake of one wheel.

c. Attach the bleeder hoses to the bleeder valves *(see figure 10-46)*.

d. Operate the brake pedals several times to force fluid into the hydraulic piping and brakes.

e. Set the brake pedal to maintain a constant pressure at the brake.

f. Open the bleeder fitting *(see figure 10-46)*.

g. Allow fluid and air to escape into a clean container.

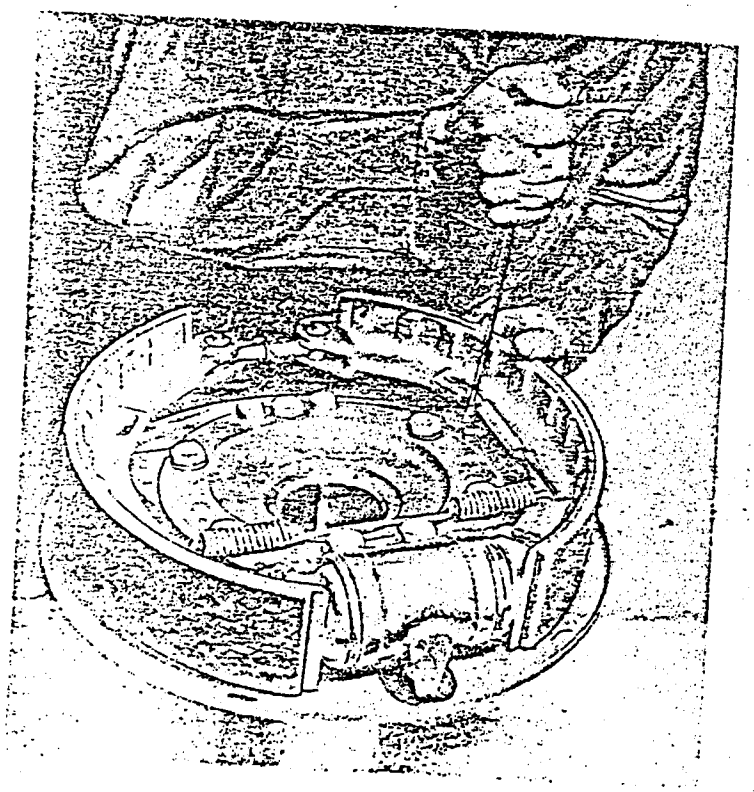

Figure 10-43. Installing Brake Shoe Pulldown Spring 33,031

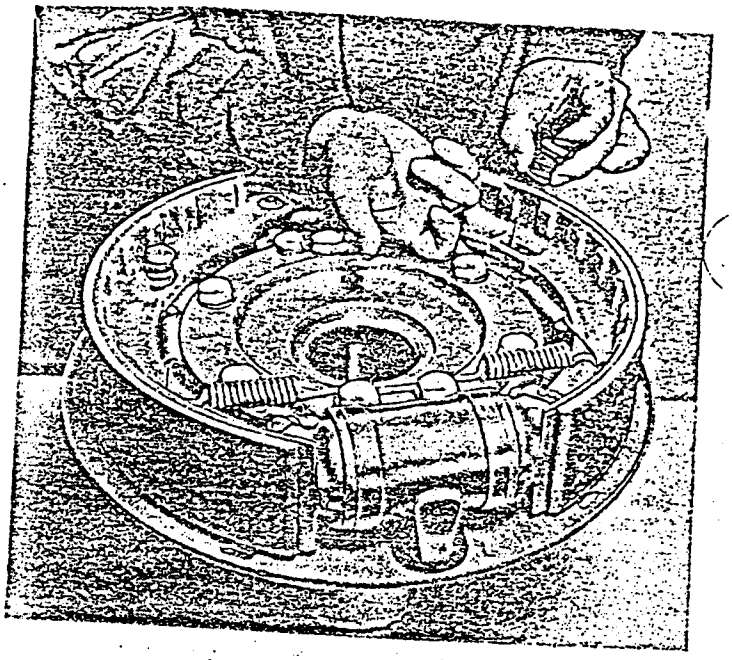

Figure 10-44. Installing Brake Shoe Holddown Spring 33,032

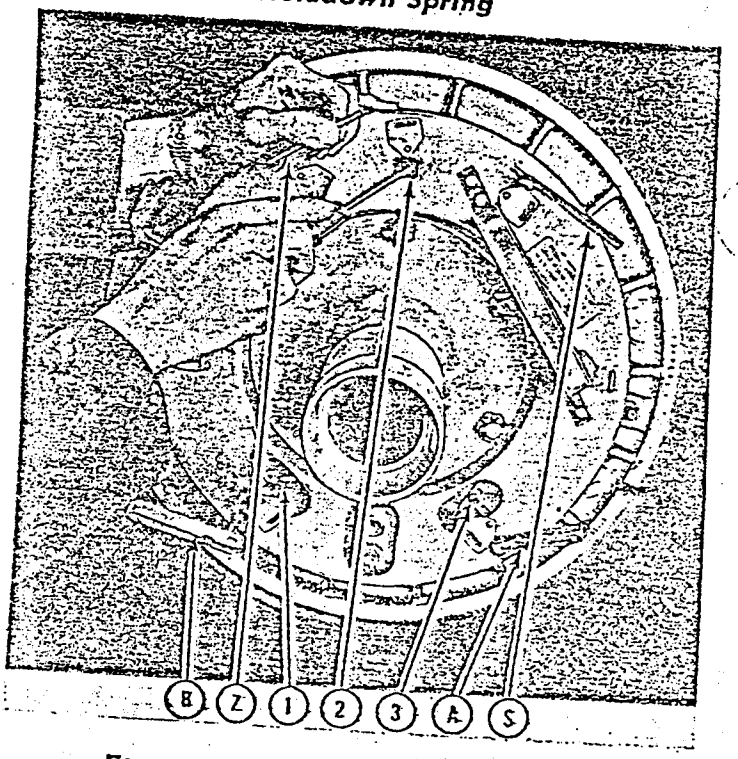

Figure 10-45. Adusting Brake Shoes 33,033

Key to Figure 10-45

Item	*Nomenclature*
1.	Major Adjusting Screw
2.	Star Wheel Adjusting Screw
3.	Major Adjusting Screw

B, Z, S, and A are feeler gages in locations specified in text.

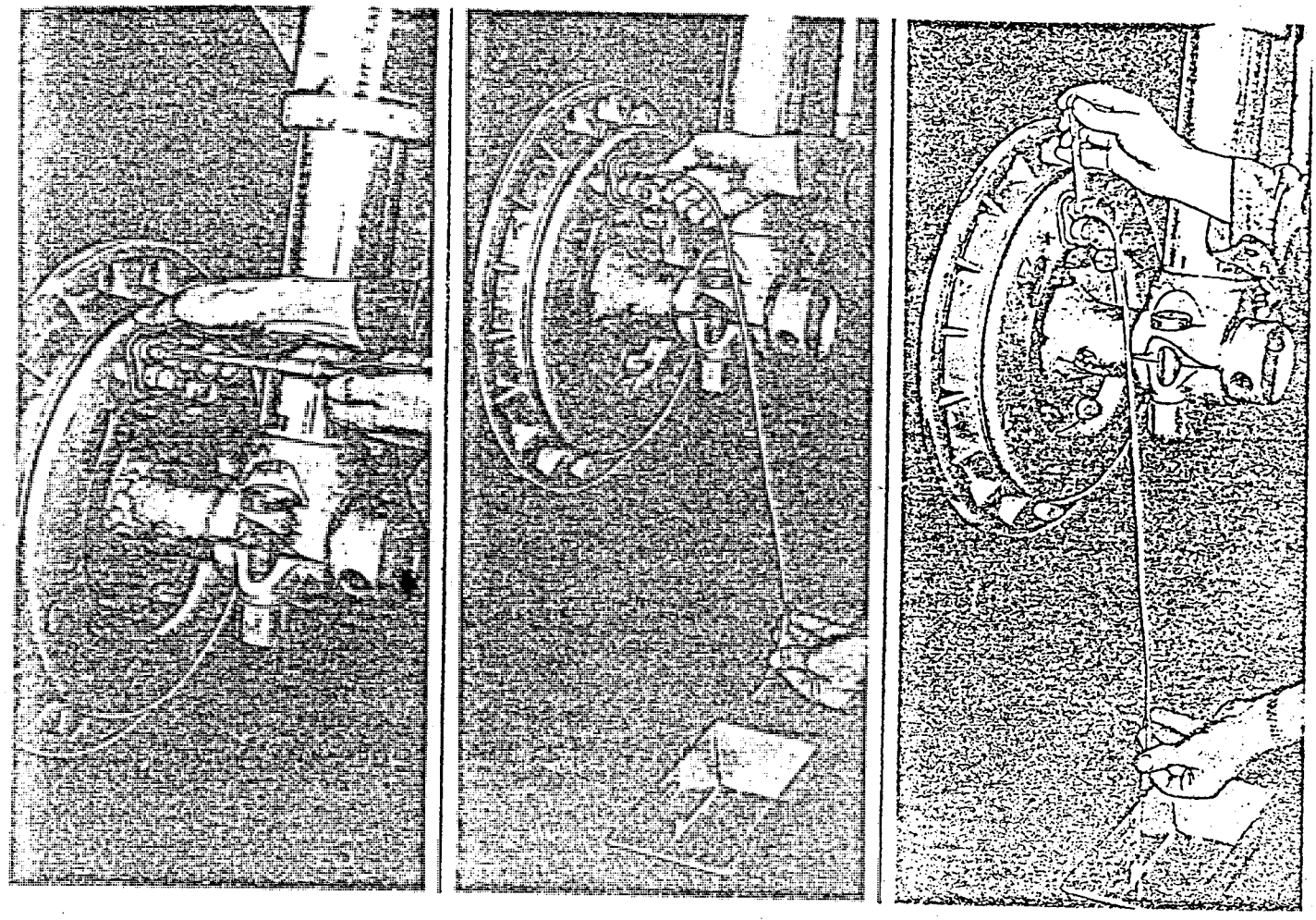

Figure 10-46. Bleeding Brake Hydraulic System

33,034

h. Close the bleeder fitting.

Note

Apply toe pressure to the rudder pedals. The pedal action will be hard. If spongy action is noted, repeat steps d through h until desired hard action is obtained.

i. Remove the bleeder hoses and install the screws in the bleeder fittings.

j. Refill the hydraulic fluid reservoir to the proper level.

10-74. FLIGHT WHEEL BRAKE.

10-75. A flight wheel brake, attached to the rear face of the firewall in each nacelle *(see figure 10-47)*, consists of a length of heavy flexible belting fastened at each end to the firewall and faced with small steel plates. When the landing gear is retracted into the nacelle, the brake automatically contacts the tire tread causing sufficient braking action to stop the rotation of the wheel.

10-76. REMOVAL OF FLIGHT WHEEL BRAKE. Remove the attaching bolts and the flight wheel brake.

10-77. INSTALLATION OF FLIGHT WHEEL BRAKE.

a. Position the flight wheel brake.

b. Install the attaching bolts.

10-78. PARKING BRAKE MECHANISM. *(See figure 10-48.)*

10-79. Setting the main wheel brakes for parking is accomplished by means of the manually operated plunger control mounted on the lower portion of the control pedestal *(see figure 10-50)*. The parking brake mechanism is a locking device that holds the rudder brake pedals in the depressed or operating position. To set the parking brake, depress the rudder brake pedals and pull out the parking brake control knob. Release the rudder brake pedals before releasing the parking brake control knob. The hydraulic system pressure gage should indicate a minimum of 500 psi for satisfactory parking brake operation. To release the parking brake, apply toe pressure on the rudder

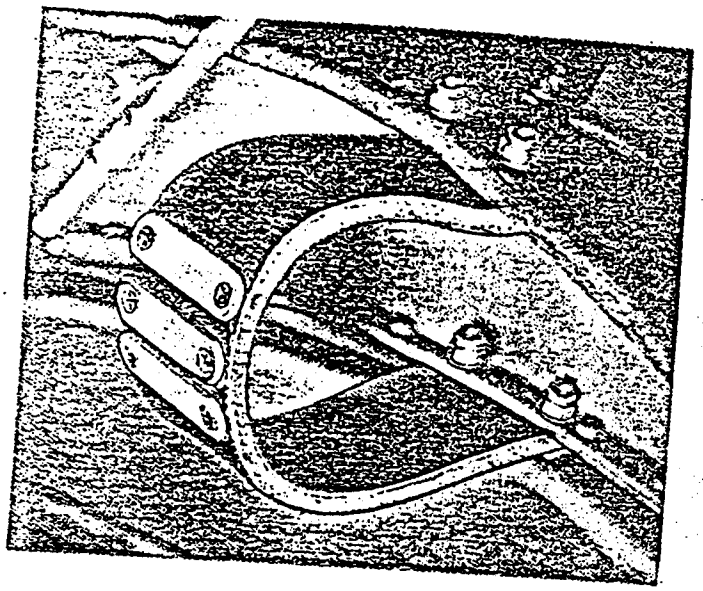

Figure 10-47. Flight Wheel Brake 33,036

brake pedals. It is not possible to lock or unlock the brakes on each wheel separately, as the brakes on both wheels are set simultaneously.

10-80. REMOVAL OF PARKING BRAKE MECHANISM.

a. Remove the bolt and lift the rod handle from the arm.

b. Unhook the two springs from the shaft assembly to the pilot's rudder pedal brake rods.

c. Remove the rod assemblies from the pilot's rudder pedal brake rods.

d. Remove the bolts and lift out the shaft assembly.

10-81. INSTALLATION OF PARKING BRAKE MECHANISM.

a. Position the shaft assembly and install the attaching bolts.

b. Attach the rod assemblies to the pilot's rudder pedal brake rods.

c. Connect the two springs from the shaft assembly to the pilot's rudder pedal brake rods.

d. Position the rod handle and install the bolt through the rod and the arm.

10-82. ADJUSTMENT OF PARKING BRAKE MECHANISM. Adjustment of the parking brake mechanism is accomplished simultaneously with the adjustment of the rudder brake pedals as outlined in paragraph 10-71 *(see figure 3-62)*.

10-83. MAIN LANDING GEAR TIRES.

10-84. The main landing gear wheels mount 10-ply, 45 x 17.00-16 tires, which encase 45 x 17.00 16 Type I inner tubes.

10-85. REMOVAL OF MAIN LANDING GEAR TIRE.

a. Remove wheel assembly as outlined in paragraph 10-61.

b. Allow the tire to deflate and remove the valve core.

c. Break tire beads loose from the wheel assembly by using standard Air Force bead breaker.

d. Place the wheel with the demountable flange side up. Dismantle and remove flange.

e. Turn wheel and tire assembly over and place on locally manufactured wooden block as shown in figure 10-48.

Warning

Locally manufactured block and wheel assembly will be encased by a metal safety cage to prevent personnal injury.

f. Using a 16 inch extension hose assembly which will extend through the safety cage onto valve stem, inflate tube with approximately 15 pounds of air pressure. This will push bead of tire completely off the wheel.

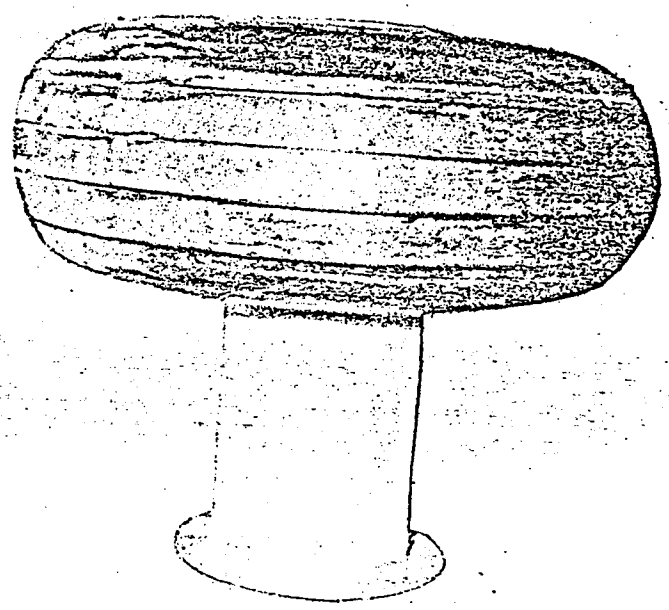

Figure 10-48. Main Landing Gear Tire Removal

Note

No valve core is installed in valve stem or extension during this procedure.

g. Release air and push valve stem into casing. Tire is now easily removed from the wheel.

10-86. INSTALLATION OF MAIN LANDING GEAR TIRE.

Note

Do not use powdered soapstone, talc, or lubricant of any kind on the tube, tire, tire beads, or wheel rim flanges.

a. Place the tube in the tire and align the red balance markers on the tube and casing.

b. Inflate the tube until it is rounded out and free of wrinkles.

c. Lay the casing on the wheel and align the valve stem with the valve stem hole in the wheel.

d. Push the valve stem into the casing and behind the bead to prevent the stem catching on the wheel.

e. Work the first bead on the wheel as far as possible and then the other bead far enough to clear the seat of the removable flange.

f. Install both halves of the removable flange and locate the notches on the flanges over the small lug on the wheel.

g. Secure the removable flange with the attaching bolts and torque the nuts from 95 to 110 inch-pounds.

h. Safety the nuts with lockwire.

i. Pull the valve stem through the hole in the wheel, using a suitable valve stem fishing tool, and install the washer and nut.

j. Before installing the valve core, inflate the tire enough to force the beads into place on the tapered bead seats.

k. Allow the tire to deflate completely and install the valve core.

l. Inflate the tire to the proper pressure, tighten the valve stem nut, and install the valve cap.

m. Install the wheel assembly as outlined in paragraph 10-62.

10-87. SERVICING OF LANDING GEAR TIRES. Correct inflation of the landing gear tires is an important procedure to obtain maximum wear from the tires. Overinflation will result in excessive center tread wear and underinflation will cause damage to the casing side walls. Inflate the main landing gear and tail wheel tires to the pressures outlined in the following chart.

Note

When a tire gage is not available, inflate the tires using the deflection method. If a deflection gage is not available, inflate the tires until the edge of the nonskid design, or molded deflection marker, barely touches the ground with the airplane resting on a smooth level surface. Check tire inflation daily.

Note

Tire pressure will increase as wheel assembly or ambient air temperatures increase. After the tire pressure has been checked and adjusted under stable temperature conditions during the preflight inspection, the tire pressure should not be decreased any time during the day. However, the tire pressure should be checked prior to each flight and increased as aircraft gross weight is increased.

10-88. TAIL WHEEL GEAR.
(See figures 10-52 and 10-53.)

10-89. A full swiveling, nonretracting, tail wheel assembly is installed at fuselage station 650. Major components of the tail wheel gear consist of the wheel and axle, tire, aeropneumatic strut, fork, spindle, and wheel locking device *(see figure 10-54.)*

Figure 10-49. Parking Brake Assembly

33,037

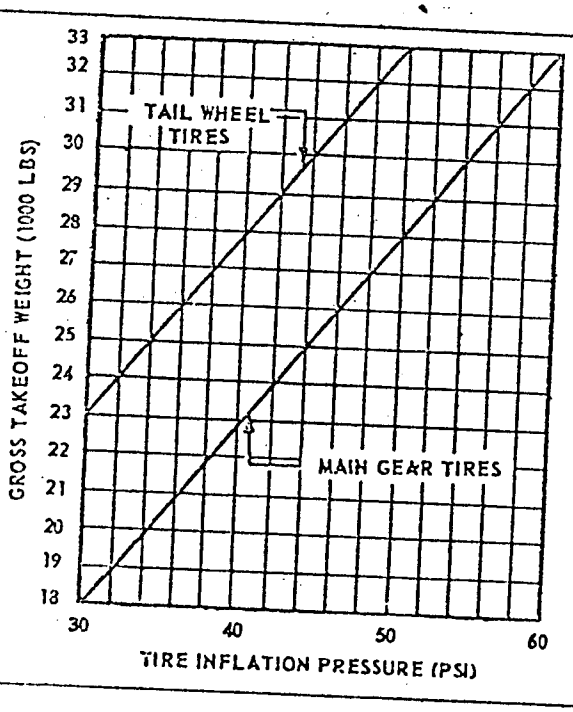

A. Minimum pressure for tail and main gear tires: 30 PSI.

b. Maximum pressure for tail and main gear tires: 60 PSI.

c. Maximum static load on tail wheel tire: 4,500 Lbs.

d. Maximum static load on main gear tire: 16,000 Lbs.

e. Vertical deflection under the static loads and inflation pressures specified shall be 35 1 - 4% the main and tail wheels and tires become critical for strength at 33,000 Lbs gross weight.

Figure 10-50. Tire Inflation Chart

V2-61

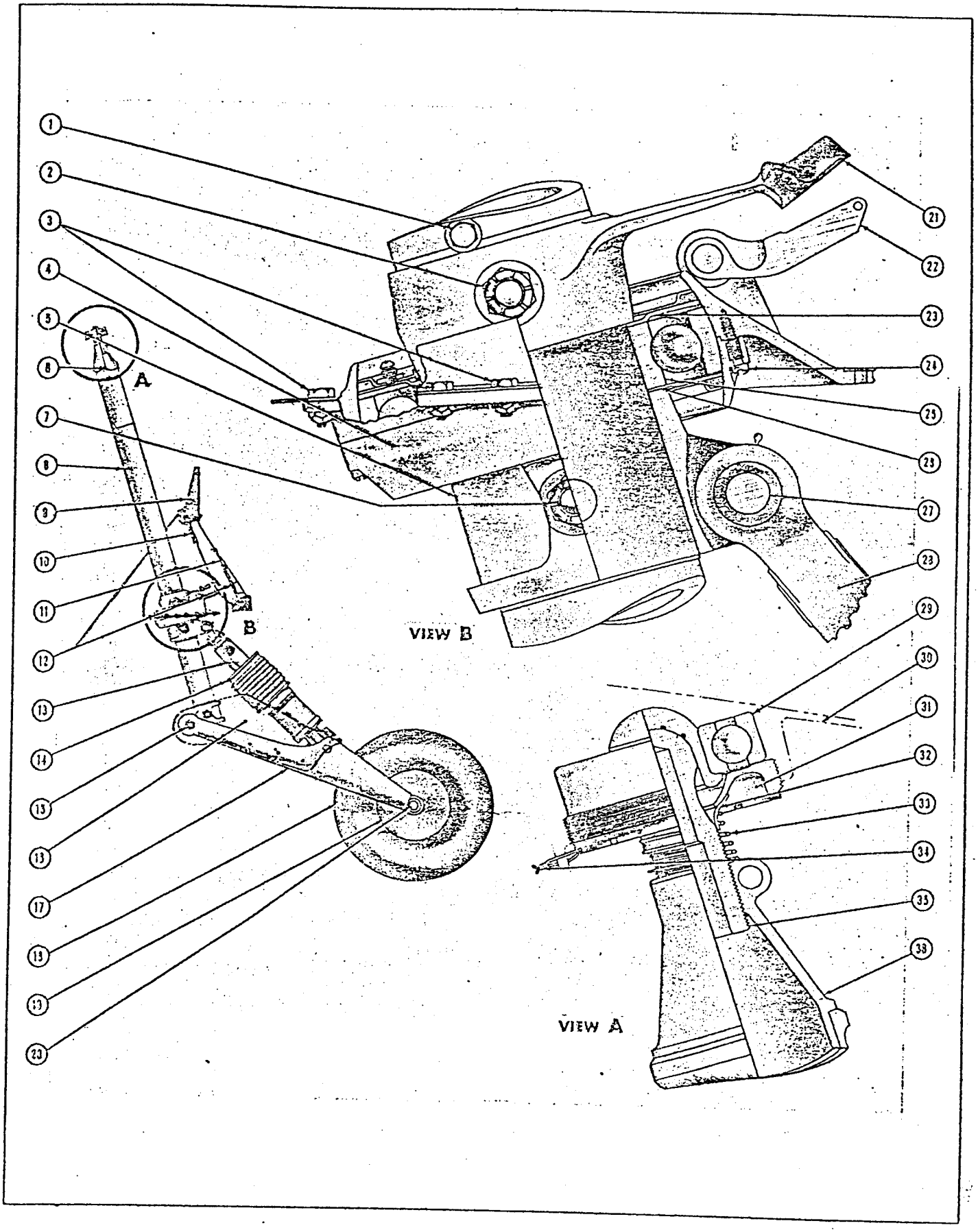

Figure 10-54. Tail Wheel Gear Installation

33.041

Key to Figure 10-54

Item	Nomenclature
1.	Bolt
2.	Pin
3.	Bolt
4.	Housing Assembly
5.	Lug
6.	Pin
7.	Pin
8.	Spindle Assembly
9.	Link
10.	Spring
11.	Cable Assembly
12.	Spring
13.	Shock Strut Assembly
14.	Dust Excluder
15.	Bolt
16.	Fairing
17.	Tail Wheel Fork
18.	Tire
19.	Wheel Assembly
20.	Axle Assembly
21.	Collar
22.	Lock
23.	Seal Assembly
24.	Screw
25.	Bearing
26.	Seal Assembly
27.	Bolt
28.	Link Assembly
29.	Bearing Assembly
30.	Fitting
31.	Cap
32.	Sleeve
33.	Spring
34.	Lockwire
35.	Ball
36.	End

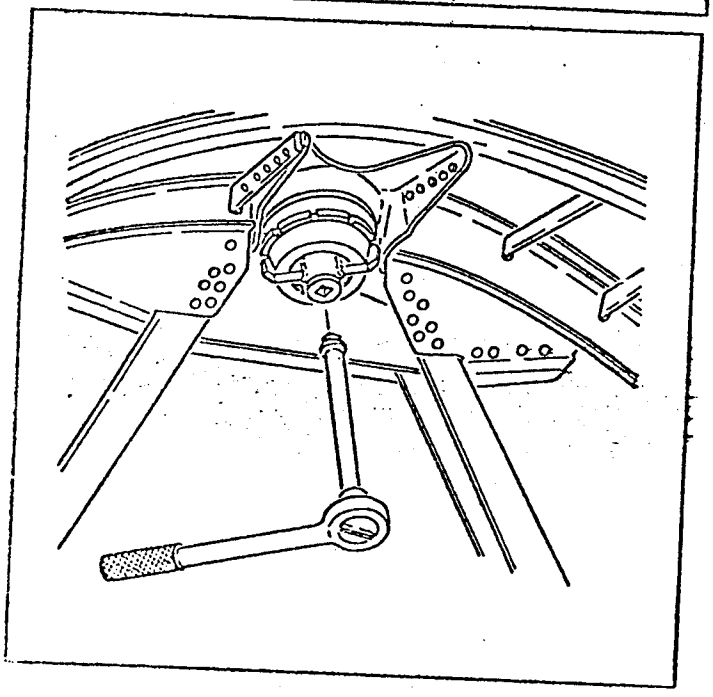

33,042

Figure 10-55. Use of Tail Wheel Spindle Cap Wrench (Service Tool No. K20901)

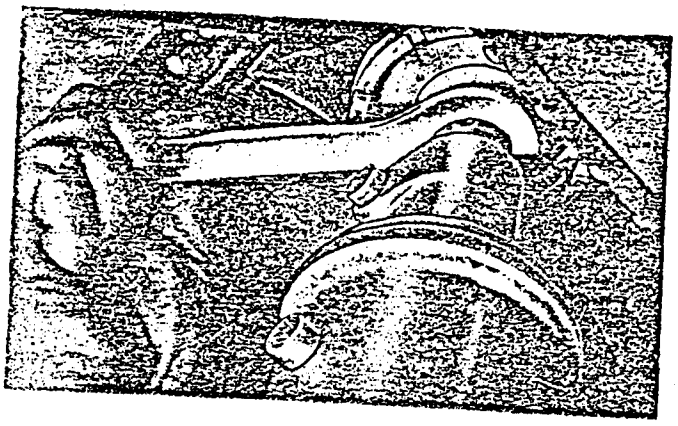

33,043

Figure 10-56. Use of Tail Wheel Spindle Ball End Spanner Wrench (Service Tool No. K20801)

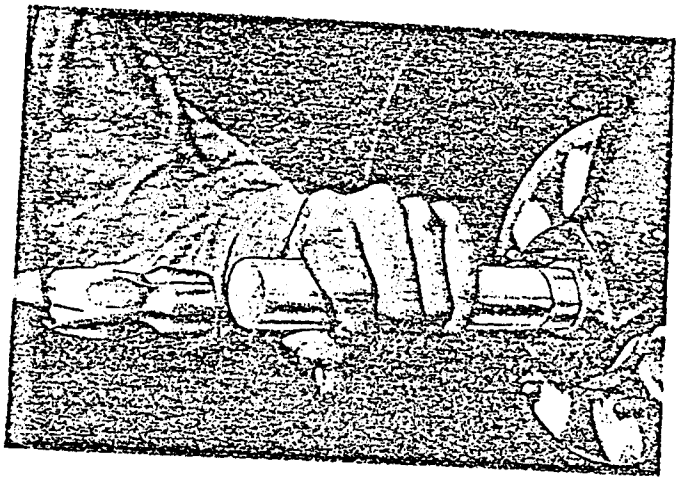

33,044

Figure 10-57. Removing Tail Wheel Axle

10-96. REMOVAL OF TAIL WHEEL BEARINGS.

a. Remove the wheel assembly as outlined in paragraph 10-94.

b. Remove the snap ring, grease retainers, washers, and bearing assembly.

c. Clean the bearings and components parts with solvent, Federal Specification P-S-661, and dry thoroughly with compressed air.

10-97. INSTALLATION OF TAIL WHEEL BEARINGS.

a. Pack the bearings with grease, Specification MIL-L-3545, by forcing the grease into and around the rollers and the cone.

b. Install the grease fitting, grease retainer washer, cup, cone and rollers, grease retainer washer, grease retainer felt, outer grease retainer, and secure them with the snap ring.

c. Install the wheel assembly as outlined in paragraph 10-95.

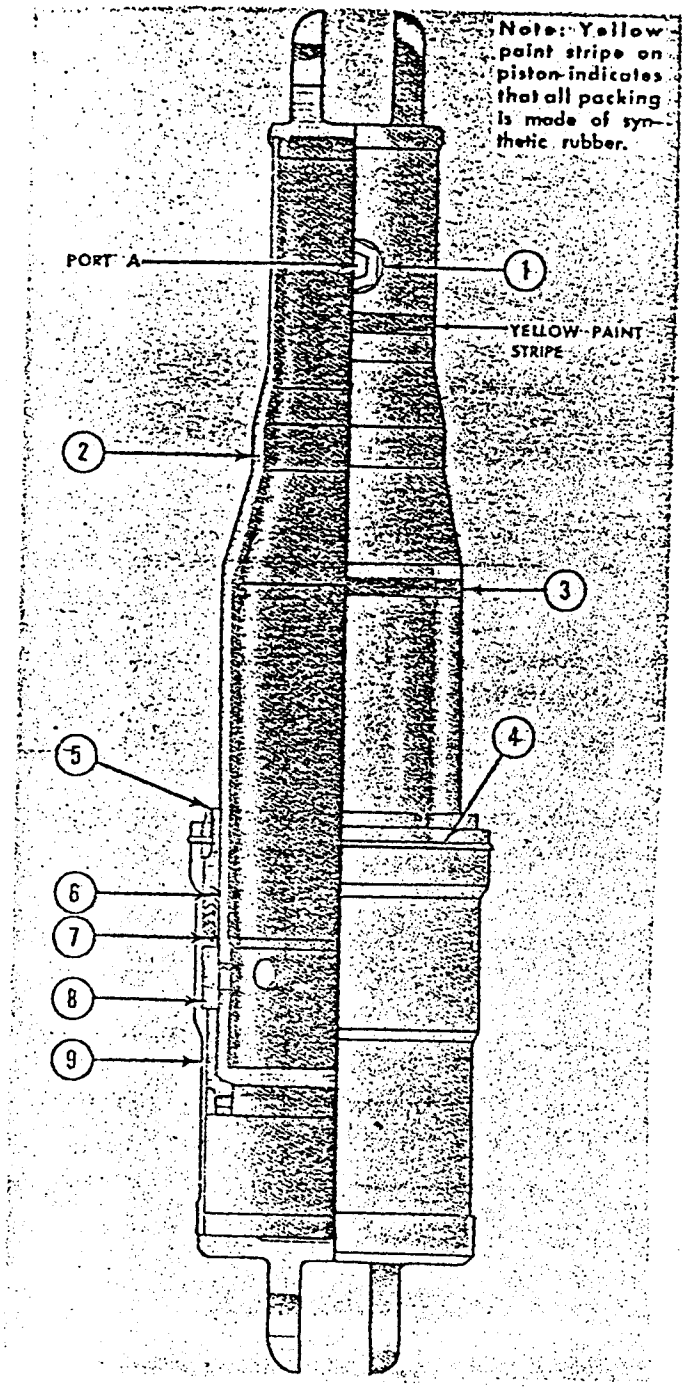

Figure 10-58. Tail Wheel Shock Absorber Strut Assembly

Key to Figure 10-58

Item	*Nomenclature*
1.	Valve Assembly
2.	Piston Assembly
3.	Red Paint Stripe, Reference
4.	Lock Bolt or Lock Ring
5.	Packing Nut
6.	Packing
7.	Ring
8.	Retainer
9.	Cylinder

10-98. ADJUSTMENT OF TAIL WHEEL BEARINGS.

a. Spin the wheel by hand and tighten the axle nut until a slight bearing drag is evident.

b. Back off the axle nut one castellation and insert the cotter pin.

Note

Before securing the cotter pin check the wheel for antibearing drag and sideplay.

c. Secure the cotter pin.

10-99. TAIL WHEEL TIRE.

10-100. The tail wheel tire mounts one Type III, Class 2, 22 x 9.00 x 6 inner tube.

10-101. REMOVAL OF TAIL WHEEL TIRE.

a. Remove the tail wheel as outlined in paragraph 10-94.

b. Completely deflate the tire and remove the valve core.

c. Remove the bolts securing the wheel halves.

d. Work the wheel halves from the tire beads.

10-102. INSTALLATION OF TAIL WHEEL TIRE.

Note

Do not use powdered soapstone, talc, or lubricant of any kind on the tube, tire or wheel flanges.

a. Place the tube in the tire and inflate until it is rounded out and free of wrinkles.

b. Slip the tire beads over the wheel flanges and install the bolts through the wheel halves.

c. Before installing the valve core, inflate the tire to the proper pressure to force the tire beads into place on the wheel.

d. Allow the tire to completely deflate and install the valve core.

e. Inflate the tire to the proper pressure, and install the valve cap (see paragraph 10-87).

10-103. TAIL WHEEL FORK.

10-104. The tail wheel fork is a support casting that mounts the tail wheel and is connected to the spindle and shock absorber strut.

10-105. REMOVAL OF TAIL WHEEL FORK.

a. Raise the tail of the airplane as described in Section II.

b. Remove the fairing from the fork.

c. Remove the wheel as outlined in paragraph 10-94.

CAUTION

Support the fork to prevent it from dropping when the shock absorber strut is disconnected.

d. Remove the screw, pin, and washers attaching the shock strut to the fork.

e. Remove the cotter pin, spacers, and bolt attaching the fork to the spindle and remove the fork.

10-106. INSTALLATION OF TAIL WHEEL FORK.

a. Connect the fork to the spindle with the bolt, spacers, and nut. Secure the nut with a cotter pin.

b. Install the pin, screw, and washers, attaching the shock strut to the fork.

c. Secure the fairing to the fork.

d. Install the wheel as outlined in paragraph 10-95.

10-107. TAIL WHEEL SHOCK ABSORBER STRUT.
(See figure 10-58.)

10-108. The tail wheel shock absorber strut is attached at the upper end to the spindle and at the lower end to the tail wheel fork. Impact loads on the tail wheel strut are absorbed by forcing the hydraulic fluid in the strut through a hole located in the strut piston. Taxiing loads are absorbed mainly by the compression of the air in the upper chamber of the strut.

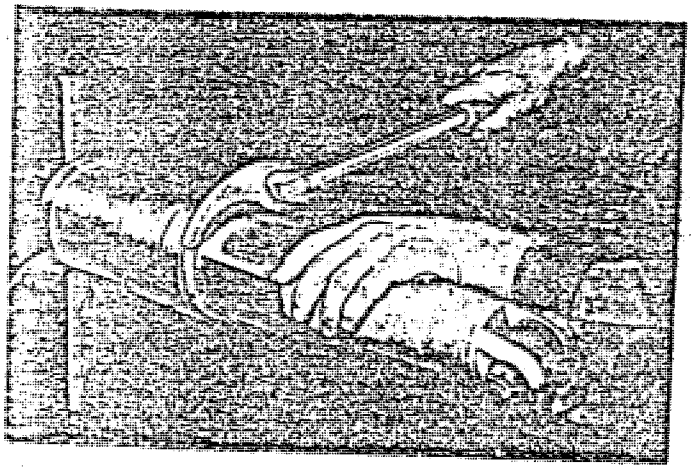

33,046

Figure 10-59. Use of Tail Wheel Shock Absorber Strut Packing Nut Spanner Wrench (Service Tool No. K26413)

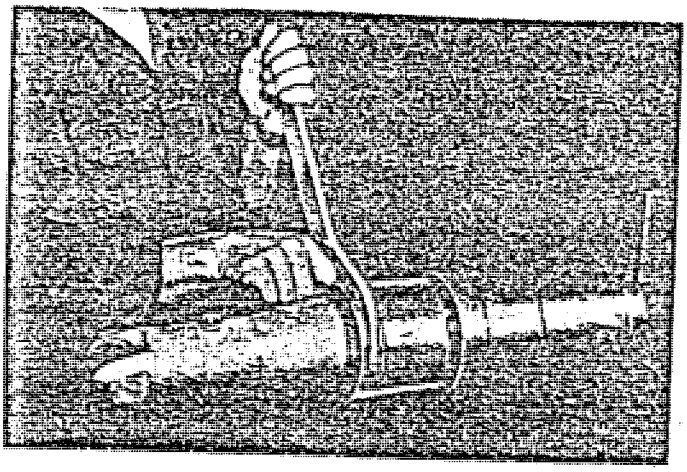

33,047

Figure 10-60. Use of Tail Wheel Shock Absorber Strut Interior Packing Gland Wrench (Service Tool No. K20501)

10-109. REMOVAL OF TAIL WHEEL SHOCK ABSORBER STRUT.

a. Raise the tail of the airplane as outlined in Section II.

b. Block the tail wheel so that it will not drop after the shock absorber strut has been removed.

c. Remove the fairing from the tail wheel fork.

d. Remove the bolts attaching the shock strut to the spindle and the tail wheel fork.

10-110. DISASSEMBLY OF TAIL WHEEL SHOCK ABSORBER STRUT. Disassembly of the tail wheel shock absorber strut is accomplished as outlined in the following steps.

WARNING

Relieve all air pressure before disassembly of the shock strut.

a. Loosen the filler plug slightly to relieve the air pressure.

CAUTION

Do not release the air pressure by depressing the valve core.

b. On C-47A airplanes, unscrew the setscrew in the packing adjustment nut.

c. On C-47B airplanes, remove the lock ring on the packing adjustment nut.

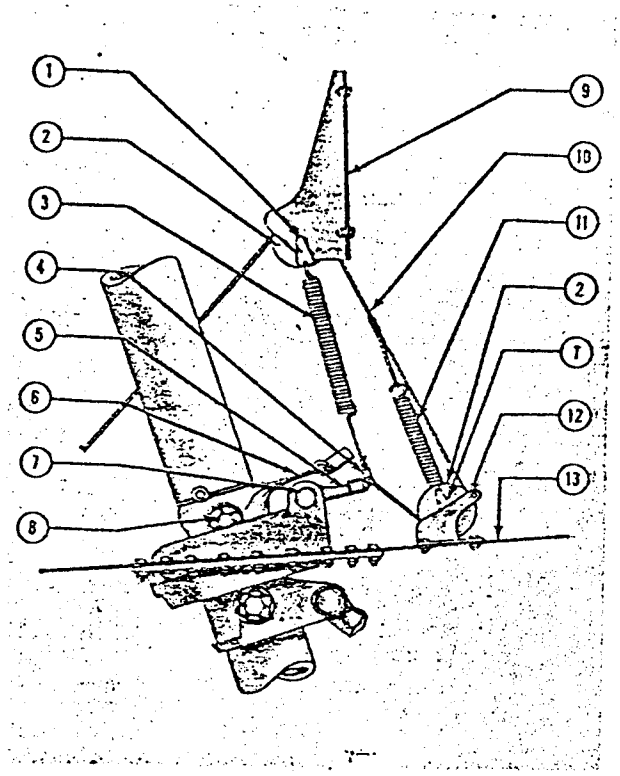

33,048

Figure 10-61. Tail Wheel Lock Mechanism

Key to Figure 10-61

Item	*Nomenclature*
1.	Link
2.	Pulley
3.	Spring
4.	Link, Pin, and Cotter
5.	Lock
6.	Collar
7.	Bolt, Nut, and Cotter
8.	Pin, Nut, Washer, and Cotter
9.	Bracket and Cotter
10.	Cable Assembly
11.	Spring
12.	Bracket
13.	Support Plate

d. Remove the packing adjustment nut, using service tool No. K26413 *(see figure 10-59).*

Note

Avoid scratching or nicking the chrome-plated portion of the piston.

e. Lift out the packing with a suitable blunt packing tool.

f. Remove the male backup ring.

g. Unscrew the interior packing gland nut from the cylinder, using service tool No. K20501 *(see figure 10-60).*

h. Pull the piston assembly from the cylinder.

10-111. ASSEMBLY OF TAIL WHEEL SHOCK ABSORBER STRUT. Assembly of the tail wheel shock absorber strut is accomplished as outlined in the following steps.

a. Insert the piston assembly into the cylinder.

b. Install the interior packing gland nut with service tool No. K20501 *(see figure 10-60).*

c. Position the male backup ring.

Note

When installing the packing use shim material to protect the edges of the packing from sharp corners and threads.

d. Wet the packing with hydraulic oil, Specification MIL-O-5606, and install one packing at a time.

e. Install the packing adjustment nut and tighten with service tool No. K26413 *(see figure 10-59).*

Note

Tighten the packing adjustment nut only as necessary to prevent leakage.

f. On C-47A airplanes, tighten the setscrew in the packing adjustment nut.

g. On C-47B airplanes, install the lock ring on the packing adjustment nut.

h. Service the strut as outlined in paragraph 10-114.

10-112. TEST PROCEDURE FOR TAIL WHEEL SHOCK ABSORBER STRUT. The test procedure for the tail wheel shock absorber strut is performed as outlined in table 10-2.

TABLE 10-2
TEST PROCEDURE - TAIL WHEEL SHOCK ABSORBER STRUT

Test Port	*Pressure Psi*	*Position of Strut*	*Allowable Leakage*
A	3000 Oil	Vertical	None in 3 minutes
A	610 Air	Vertical	None in 4 hours
A	610 Air	Horizontal	None in 4 hours

10-113. INSTALLATION OF TAIL WHEEL SHOCK ABSORBER STRUT.

a. Position the tail wheel shock absorber strut and install the bolts, attaching the strut to the spindle and fork.

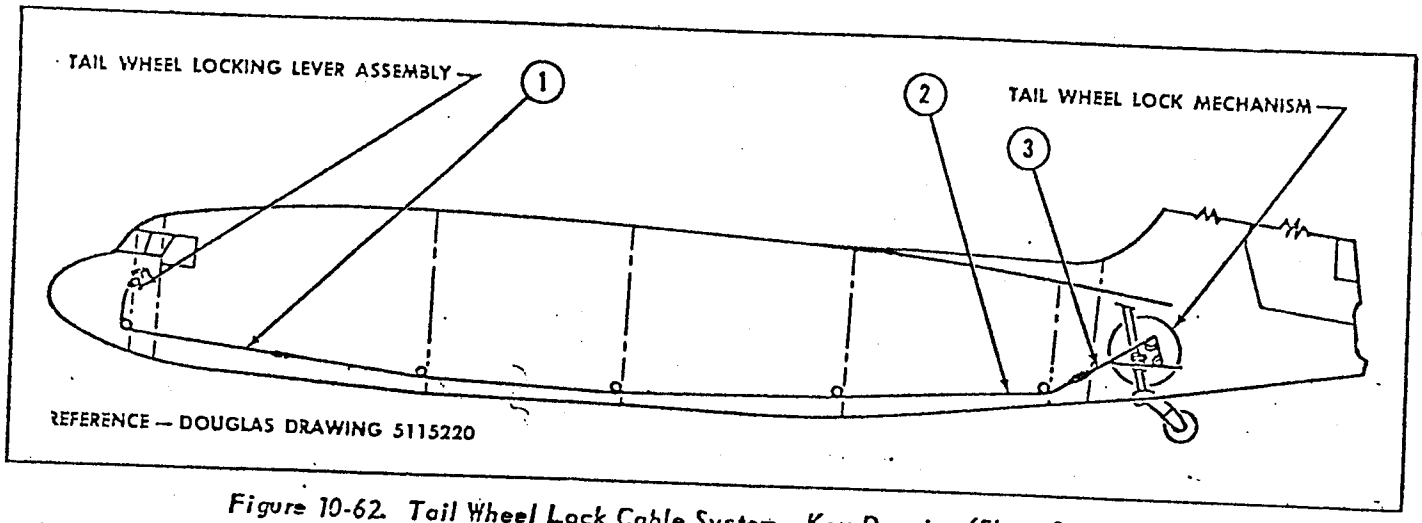

Figure 10-62. Tail Wheel Lock Cable System - Key Drawing (Sheet 1 of 2)

33,049

b. Install the fairing on the tail wheel fork.

10-114. SERVICING TAIL WHEEL SHOCK ABSORBER STRUT.

a. Use hydraulic fluid, Specification MIL-O-5606, to fill the shock strut.

b. To check the fluid level, or fill the strut, loosen the filler plug and allow the air to escape slowly.

CAUTION

Do not depress the valve core to deflate the strut.

WARNING

Do not completely remove the filler plug until the strut is fully compressed, or serious injury will result to personnel or airplane.

c. Fluid level will be at the lower edge of the filler opening when the strut is fully compressed.

WARNING

Inflate the shock strut with compressed air or nitrogen only. Do not use oxygen, hydrogen, acetylene, etc, or serious damage will result.

d. When filling an empty strut, move it through full stroke two or three times to remove the trapped air.

e. Apply air through the air valve until the red line on the piston tube is located 1¼ (±¼) inches from the packing adjustment nut.

CAUTION

Do not exceed maximum tail strut pressure of 300 psi with strut in either normal or further compressed position. If strut is further extended, air pressure must be decreased.

f. Install the air valve cap, painted yellow, and secure it with a torque of 15 to 25 inch-pounds.

10-115. TAIL WHEEL LOCKING MECHANISM.
(See figures 10-61 and 10-62.)

10-116. The spring-operated lock for the tail wheel is a locking key hinged to the fuselage structure. The key is pulled from the slot by the attached cable connected to the control handle, located on the control pedestal, allowing the tail wheel spindle to turn freely. A spring again locks the wheel assembly when the control handle is released. A duralumin pin secures the slotted fitting to the spindle, and, in the event of excessive side load on the tail wheel, the pin will shear, allowing the tail wheel gear to swing free before damage occurs to the fuselage structure in the area. The lock engages only when the tail wheel is in the trailing position.

10-117. REMOVAL OF TAIL WHEEL LOCKING MECHANISM.

a. Place the tail wheel lock control handle in the locked position.

b. Remove the bolt through the lock link and the upper spring.

c. Remove the bolt through the cable clevis, link, and lock.

d. Remove the bolt attaching the lock to the spindle housing, slide the lock aft, and remove it.

CABLE REF NO.	DOUGLAS CABLE ASSEMBLY DRAWING NO.	NO. REQD	TYPE	CABLE LENGTH (L_1)	CABLE LENGTH (L_2)	CABLE SIZE	FITTINGS (1)	FITTINGS (2)	FITTINGS (3)	FITTINGS (4)
1	2118996	1	A	118		3/32 dia 7x7 flex.	1116245 16D	52049219-16D-3L		
2	2074407EF	1	B	488		3/32 dia 7x7 flex.	AN669L 3LH	AN669L3RH		
3	2118995	1	C	51 1/2		3/32 dia 7x7 flex.	AN669L3 RH	1-1605T3 1-1625C3		
	*2118995-4					*1/16 dia 7x7 flex.	*AN668-2			

TYPE A

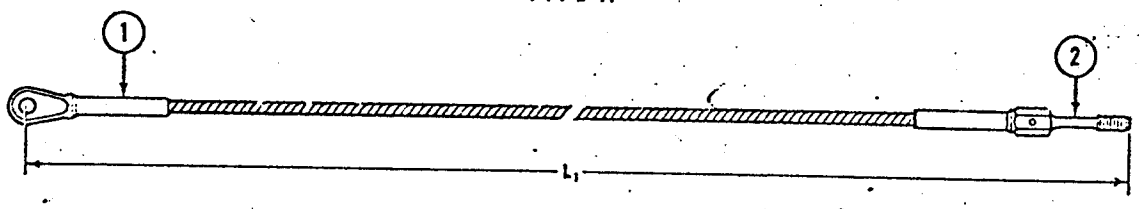

TYPE B

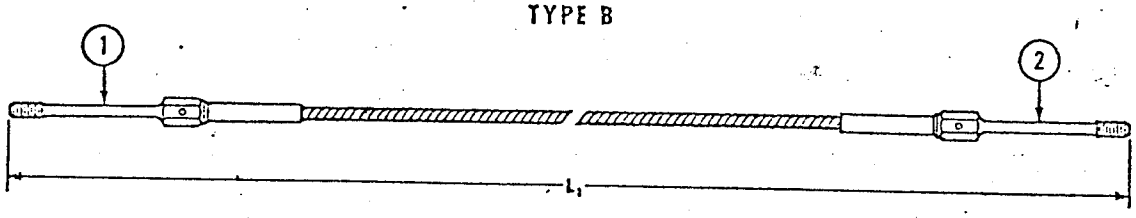

TYPE C

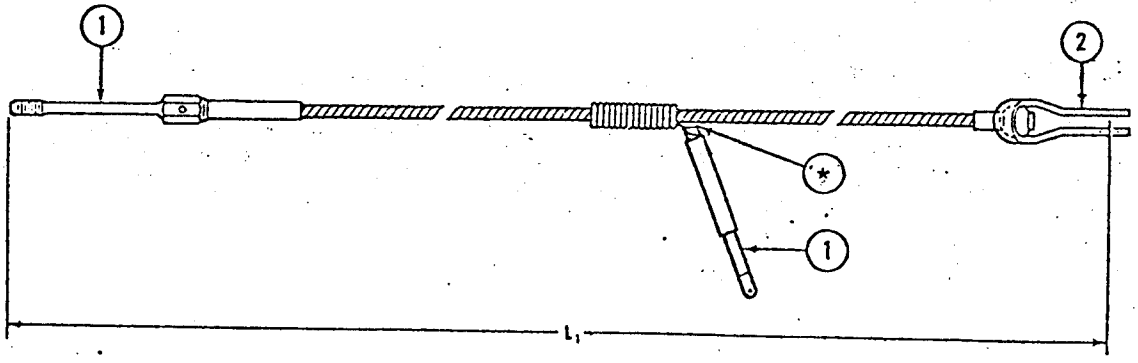

Figure 10-62. Tail Wheel Lock Cable System - Cable Chart and Cable Assemblies (Sheet 2 of 2)

33,050

10-118. INSTALLATION OF TAIL WHEEL LOCKING MECHANISM.

a. Insert the lock in the spindle housing and install the bolt.

b. Position the cable clevis and link to the lock and install the bolt.

c. Connect the upper spring to the link with the attaching bolt.

10-119. ADJUSTMENT OF TAIL WHEEL LOCKING MECHANISM. Adjust the tail wheel locking mechanism as outlined in the following steps.

a. Place the lock control handle in the locked position.

b. Turn the barrel of the forward cable turnbuckle until the threads of the cable end fittings are covered, and safety the turnbuckle with lockwire.

c. Adjust the cable rear turnbuckle until there is a minimum amount of slack aft of the splice to insure complete bottoming of the lock.

d. Place the handle on the control pedestal in the unlocked position, and adjust the rear turnbuckle to obtain 1/8-inch minimum clearance between the lock and the mating part on the tail wheel spindle, and 3/32-inch minimum clearance between the aft cable end and the pulley.

e. Safety the turnbuckle with lockwire.

10-120. AIRPLANE SKIS.

10-121. GENERAL DESCRIPTION. *(See figures 10-63 and 10-64.)* The main skis may be extended or retracted on the main wheels, permitting the airplane to take off and land on a clear runway, as well as on one covered with ice or snow. When the main skis are retracted on the main wheels, the tires extend approximately 8 inches below the bottom surfaces of the skis. Extension and retraction of the skis on the wheels are accomplished hydraulically. The main skis are extended and retracted on the wheels by means of a special control system which is separate from that which controls extension and retraction of the landing gear.

10-122. The following paragraphs provide instructions for the operation, lubrication, maintenance, installation, testing, and modifications prior to installation of the airplane skis for C-47 and C-117 airplanes. Ski installation for takeoff and landing on snow or ice-covered terrain are to be made only on C-47 and C-117 airplanes incorporating modified hydraulic engine pump selection system and relocated power plant oil coolers.

10-123. During flight, when the main landing gear is extended, the main skis are held in the proper position by means of aerodynamic riggers. These riggers consist of airfoils attached to the aft section of the skis. The main skis are allowed a maximum pitching range, from normal, of approximately 20 degrees negative to 15 degrees positive, thus enabling the skis to follow uneven terrain during takeoff, taxiing, or landing. The pitching range is controlled by limiting cables installed forward and aft to prevent the skis from traveling beyond their maximum safe operating limits. When the main landing gear is up and the skis are retracted on the wheels, the skis rest against the bottom of each nacelle. Two rubber bumper pads are installed on each ski to prevent vibration or damage when the skis and landing gear are both retracted. The tail ski is not retractable. The tail ski is prevented from pitching beyond the safe angles of incidence and lateral rotation by means of the limiting cables installed forward and aft. The main skis are designed for a gross weight capacity of 15,000 pounds each and the tail ski is designed for a gross weight capacity of 4000 pounds.

10-124. The main skis are approximately 13 feet 11 inches long and weigh approximately 469 pounds. The tail ski is approximately 5 feet 8¼ inches long and weighs approximately 46 pounds. The skis are installed on the airplane as shown in figure A-2. Each main ski is attached to an axle stub and tube which extends through the airplane axle and is held in position by means of special bushings inserted in the brake torque collars. Hydraulic fittings at the inboard side of each ski are connected to the airplane hydraulic system. The tail ski is attached by a special axle which installs through the existing airplane axle. A mechanical rigger is bolted to the front of the tail ski and to the tail wheel strut.

10-125. MAIN SKIS.

10-126. The lefthand and right hand main skis are similar in construction, the differences being in their retracting mechanisms and related parts. They are not interchangeable. Each ski is a welded and riveted assembly consisting basically of the ski bottom section, channels, and saddles. The ski assemblies are reinforced internally by diaphragm sections spaced at approximate 1-foot intervals. A steel skeg is bolted to the rear of each ski runner. The saddles are riveted to the ski channels and are attached to the front and rear torque tubes, the aerodynamic rigger, and the retracting arms.

10-127. The front torque tube is welded to the front saddles as an integral part of the ski. The rear torque tube is bolted to the saddles so that it can be removed to facilitate ski installation. The aerodynamic rigger and retracting arms are also bolted to the saddles.

10-128. The axle stub and tube passes through the airplane axle and is retained in a centered position by two bushings which fit into a specially machined recess in each brake torque collar. Four torque collar clamp locks are supplied with each set of skis to

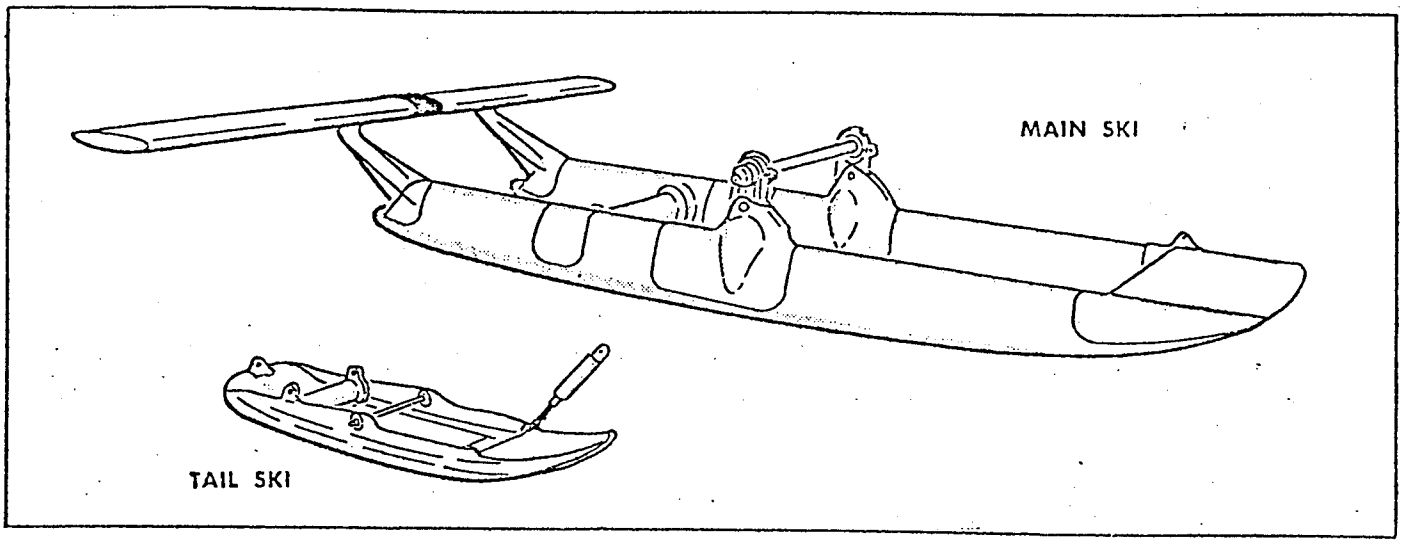

Figure 10-63. Main and Tail Skis

V2-41

replace the existing bolts securing the brake torque collar to the axle.

10-129. A retracting arm assembly, consisting of an arm, a collar, and a retaining ring, is bolted to each end of the axle stub and tube and to the ski pedestal *(see figure 10-65)*. The four retracting arms are not interchangeable. The inboard retracting arm is attached to a hydraulic cylinder located within the ski. The cylinder is connected to two hydraulic fittings, located on top of the inboard channel by means of flexible hose. Access to the hydraulic cylinder is obtained by removing a cover plate from the bottom of the ski assembly. A smaller plate, located on the inboard side of the ski, can be removed to gain access to the bolt attaching the cylinder to the retracting arms.

10-130. The aerodynamic rigger is an airfoil unit, bolted to the rear saddles, incorporating two mounting arms which fit into the clevis at the rear of each saddle. Two bolts with check nuts are provided for adjusting the rigger as required. When the proper adjustment is completed, a hole is drilled through the rigger arm and clevis, and a bolt inserted to hold the rigger securely in position. A rubber bumper, extending longitudinally around the middle of the rigger, prevents contact with the airplane structure. A similar rubber bumper is installed on the front section of the ski assembly.

10-131. TAIL SKI.

10-132. The tail ski is a welded and riveted assembly consisting basically of the ski bottom section and two longitudinal members reinforced by two torque tubes. The ski is attached to the airplane by installing a special axle through the existing airplane axle. Two adapter bushings fit inside the tail wheel axle to serve as bearings for the tail ski axle and replace the standard tail wheel towing lugs.

10-133. The tail ski mechanical rigger is bolted to the tail wheel strut and to the mounting lug located on the left side of the front torque tube. An eyebolt, attached to the piston rod of the rigger, provides for a small amount of adjustment. The rigger assembly consists of a preloaded spring to resist movement in either direction between the end fittings.

10-134. HYDRAULIC INSTALLATION. Hydraulic pressure and return hose assemblies are connected to each ski from the airplane hydraulic system piping as shown in figure 10-66. A control valve, installed in the flight compartment, operates the skis.

10-135. TROUBLE SHOOTING OF AIRPLANE SKIS. Trouble shooting of the airplane skis is accomplished as outlined in table 10-3.

TABLE 10-3
TROUBLE SHOOTING - AIRPLANE SKIS

TROUBLE	PROBABLE CAUSE	REMEDY
a. Main skis do not maintain proper angle of incidence.	Aerodynamic rigger not adjusted correctly.	Adjust rigger.
b. Tail ski does not maintain proper angle of incidence.	Defective or broken spring in rigger.	Replace spring.

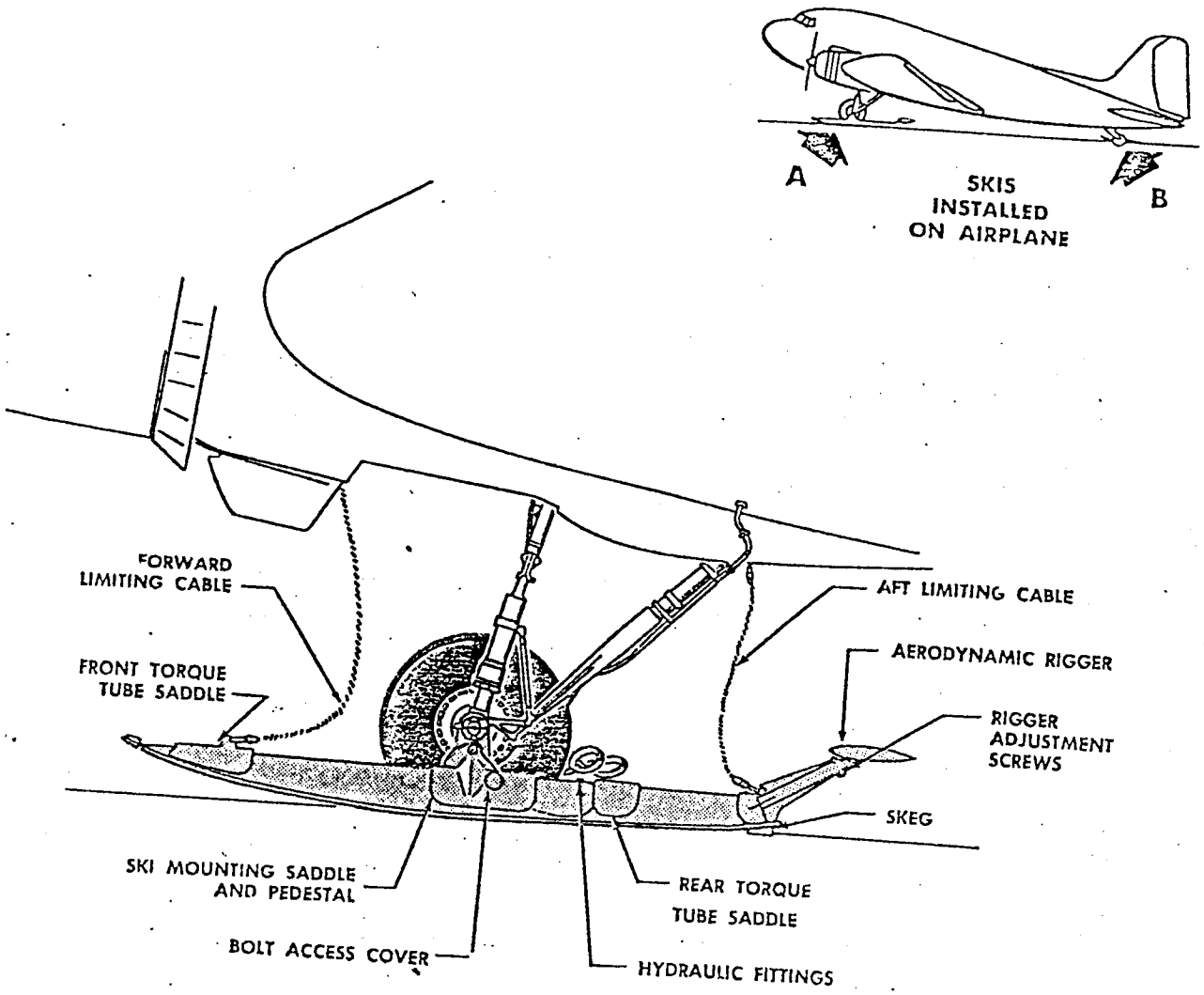

VIEW A
MAIN SKI

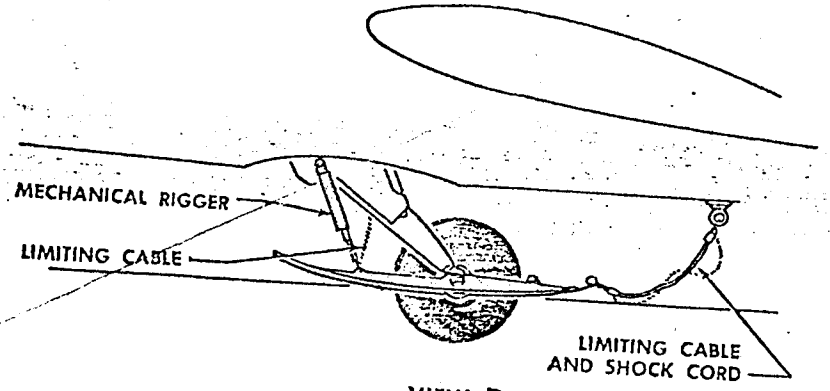

VIEW B
TAIL SKI

Figure 10-64. Main and Tail Skis Installed

31,169

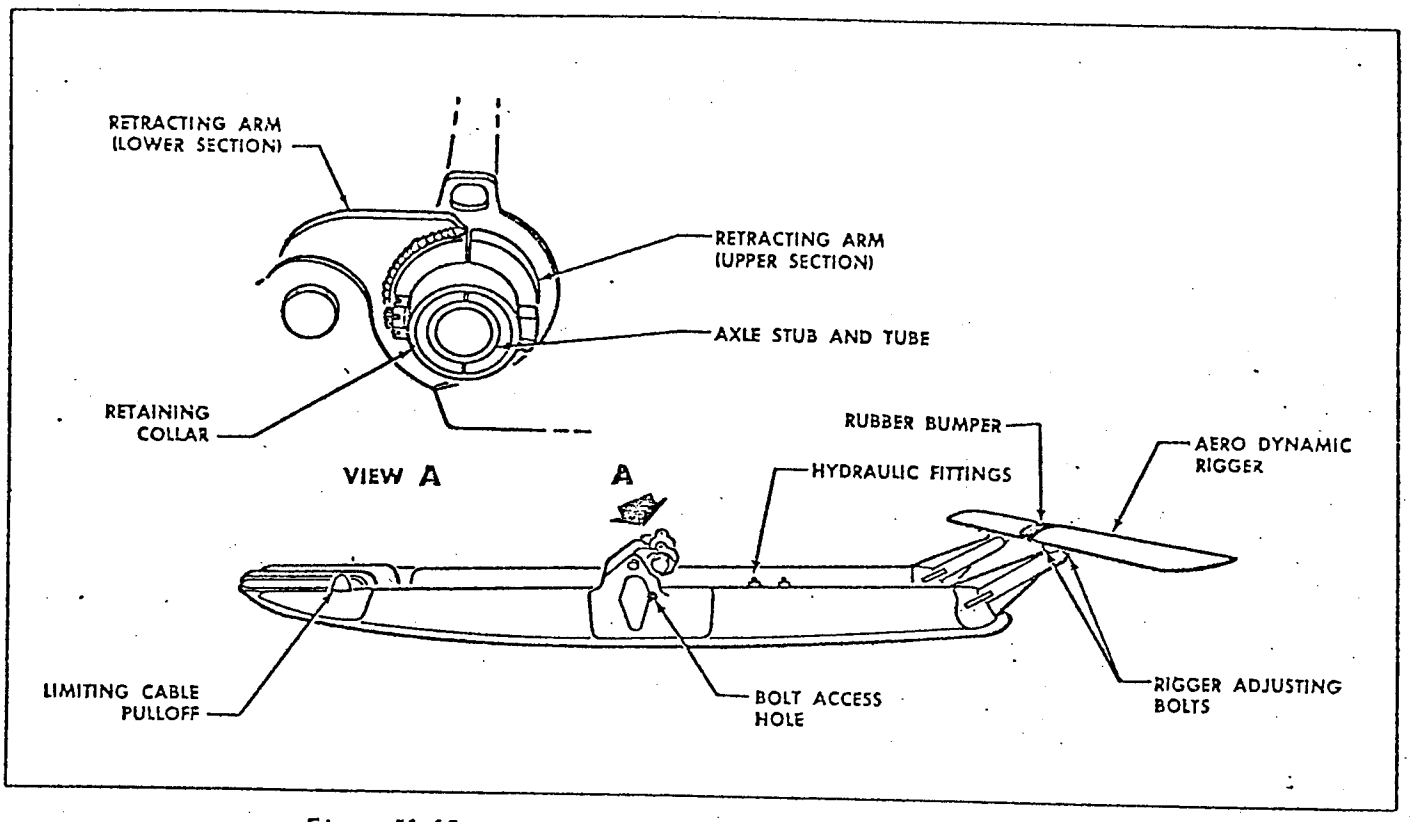

Figure 10-65. Main Ski Retracting Arm and Attaching Parts

V2-42

TABLE 10-3 (Continued)

TROUBLE	PROBABLE CAUSE	REMEDY
c. Main skis will not retract.	Hydraulic system failure.	Check hydraulic system.
	Stoppage in pipes.	Check that pipes are not clogged.
	Defective cylinder.	Replace cylinder.
	Excessive airspeed.	Retract gear below 120 mph.
d. Main skis vibrate in flight.	Stops on retracting arm collar do not contact rubber bumpers.	Adjust bumpers.
	Rubber bumpers worn.	Replace bumpers.
e. Main skis creep downward when retracted.	Control valve not in NEUTRAL.	Place valve handle in NEUTRAL.
	Defective control valve.	Replace valve.
	Defective seals in cylinder.	Replace seals.
	Leakage in hydraulic pipes.	Check pipes.

10-136. LUBRICATION OF AIRPLANE SKIS. *(See figure 10-67.)* Lubrication of the airplane skis is accomplished as outlined in the following paragraphs.

10-137. DAILY LUBRICATION OF AIRPLANE SKIS. Apply a few drops of oil, Specification MIL-L-7870, to the tail ski rigger end fittings.

10-138. 50-HOUR LUBRICATION OF AIRPLANE SKIS.

a. Lubricate the retracting arm pivot bolts and the cylinder attaching bolts.

b. Remove the bolts, clean with solvent, Federal Specification P-S-661, and coat with grease, Specification MIL-G-7118.

Key to Figure 10-65.

Item	Nomenclature	Item	Nomenclature
1.	Selector Valve Handle	13.	Gasket
2.	Self-Locking Nut	14.	Flared Tube Union
3.	Washer	15.	Flared Tube Elbow
4.	Selector Valve Mounting Bracket	16.	Retaining Nut
5.	Selector Valve	17.	Hose Assembly
6.	Coupling Nut	18.	Nacelle
7.	Coupling Sleeve	19.	Main Landing Gear
8.	Tee	20.	Torque Collar Clamp Lock
9.	Coupling Nut	21.	Self-Locking Nut
10.	Coupling Sleeve	22.	Washer
11.	Tee	23.	Bolt
12.	Flared Tube Union		

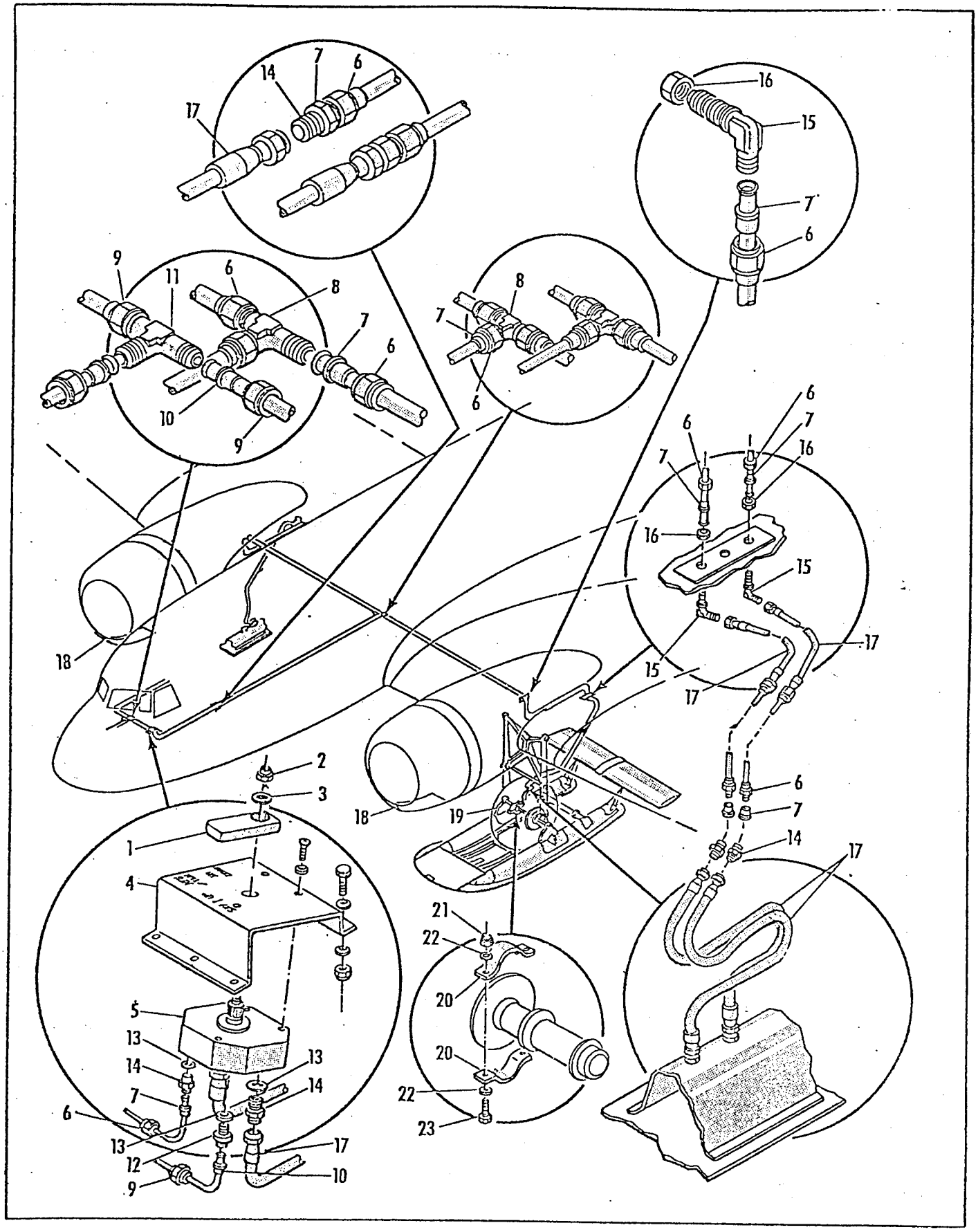

Figure 10-66. Main Ski Hydraulic Installation Details

V2-43

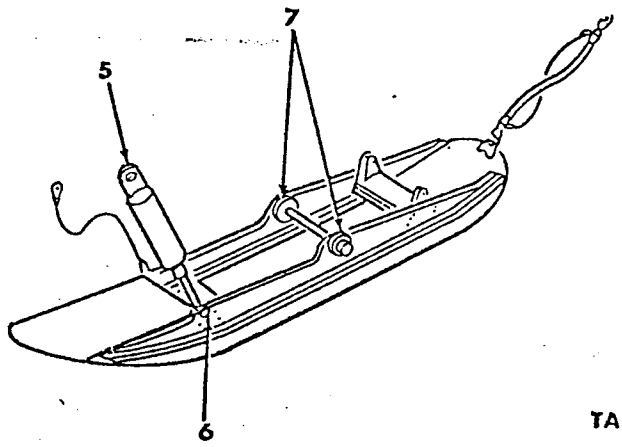

TAIL SKI

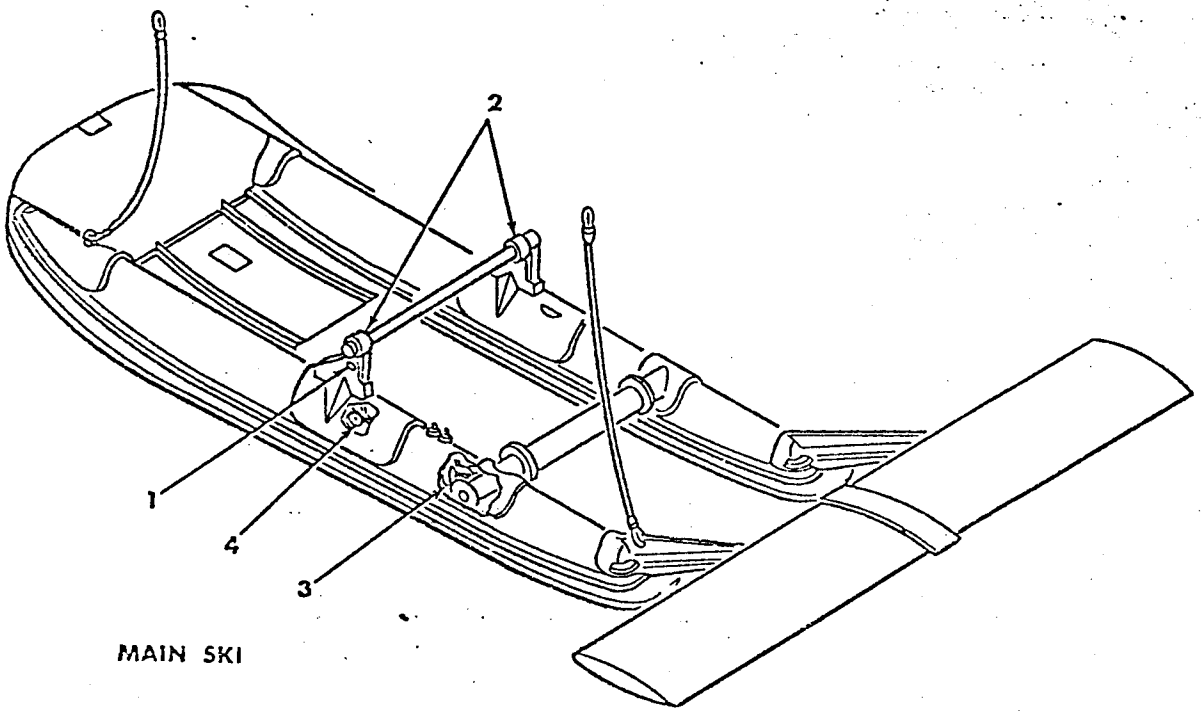

MAIN SKI

Index	Item	Lubricant	Specification
1	Arm Pivot	Grease, Low Temperature	MIL-G-7118
2	Axle Bushings	Grease, Low Temperature	MIL-G-7118
3	Hydraulic Cylinder Pull-Off	Grease, Low Temperature	MIL-G-7118
4	Arm-Cylinder Attachment	Grease, Low Temperature	MIL-G-7118
5	Rigger Attachment Point (Upper)	Oil, Lubricating	MIL-L-7870
6	Rigger Attachment Point (Lower)	Oil, Lubricating	MIL-L-7870
7	Axle Bushings	Grease, Low Temperature	MIL-G-7118

Figure 10-67. Lubrication Chart

V2-44

10-139. 200-HOUR LUBRICATION OF AIRPLANE SKIS.

a. Remove the main ski axle. Clean and inspect the bronze axle bushings, and coat with grease, Specification MIL-G-7118.

b. Remove the tail ski. Clean the bushings and bearings with solvent, Federal Specification P-S-661, and coat with grease, Specification MIL-G-7118.

Note

The tail ski rigger is lubricated at the factory with grease, Specification MIL-G-7118, and requires no further lubrication until it is disassembled.

10-140. **OPERATION OF AIRPLANE SKIS.** During take-off, flight, and landing, the main skis are positioned in the proper attitude by aerodynamic riggers, and the tail ski position is held by a mechanical rigger. The main skis can extend or retract on the wheels only with the landing gear in the extended position. The tires protrude through the ski bottom section when the ski is in the extended position to facilitate the use of differential braking. The passage of the extended portion of the tire through the snow creates additional drag which, for normal ski operation, is not prohibitive. Under certain adverse conditions, such as extremely wet snow or operation from high altitudes, the drag created by the protruding wheel is excessive. The following alternate methods are used to eliminate excessive drag.

a. Remove the wheels.

Note

The positioning of plates over the wheel orifice will not improve the operation, as the well thereby created will collect large quantities of flying snow.

b. Decrease the tire pressure to 15 psi and maintain this pressure to insure the proper seating of the tire bead on the wheel rim.

CAUTION

The methods described in step a or b, to eliminate excessive drag, must be used only when operating the airplane on snow-covered terrain with the skis extended.

c. The use of smooth tread tires also decreases snow drag. Do not use this method if operation on ice is anticipated, as smooth tires provide poor braking action. For the best braking action, use ice grip tires and maintain normal tire pressure.

10-141. MAIN SKI RIGGERS.

10-142. The aerodynamic rigger is a fixed airfoil section, preset to hold the main skis at the proper angle of direction. The rigger is adjustable, but once it is properly set, there is no need for additional adjustment.

10-143. MAIN SKI RETRACTING MECHANISM *(See figure 10-68.)*

10-144. The hydraulic actuating cylinder of each main ski assembly is attached to the inboard retracting arm. Both retracting arms are bolted to the axle stub and tube. Any movement of the inboard arm produces an identical movement of the outboard arm. When the cylinder piston is fully retracted, the ski is located in the extended position. As the hydraulic pressure extends the piston, the retracting arms move forward, lifting the ski a maximum travel of approximately 4½ inches. When the skis are retracted, the stops on the arm retaining collars are positioned directly above the axle. The stops contact the rubber bumpers on the nacelles when the skis and landing gear are both retracted.

10-145. MAIN SKI HYDRAULIC SYSTEM. *(See figure 10-68.)* Pressure and return pipes route from the hydraulic system to a control valve, and from the valve to the A and B fittings on each cylinder. When the valve control handle is positioned to SKI UP, the pressure is directed to the A (aft) cylinder port, thus extending the cylinder piston. When the handle is turned to SKI DOWN, pressure is directed to the B (forward) cylinder port, thus retracting the piston. When the handle is positioned at NEUTRAL, the pressure and return fluid are locked in the pipes, preventing the skis moving from the set position.

10-146. TAIL SKI RIGGER. *(See figure 10-69.)*

10-147. The tail ski mechanical rigger is normally located in the neutral (flight) position. Rigger barrel lug (1) is bolted to the left side of the tail wheel strut, and eyebolt (7) on the piston (6) is attached to the ski. Upward movement of the ski nose forces the piston rod (6) inward, pressing the inner compression rod (4) against the spring (5). Downward movement of the ski nose pulls the pistons (6 and 3) outward, pressing the flange (2) against the spring (5). When outside force is not exerted on the ski, the spring-loaded rigger will maintain neutral position.

10-148. LIMITING CABLES.

10-149. The limiting cables, installed forward and aft on all skis, prevent any travel beyond a safe maximum pitching distance.

10-150. PREVENTION OF FREEZEDOWN. To prevent freezedown from occurring, do not allow the airplane to come to a stop at the end of a taxi run. Keep the airplane moving and allow it to stop after taxiing slowly for a short distance. Park the airplane in a regular parking area; avoid parking it in the snow or on

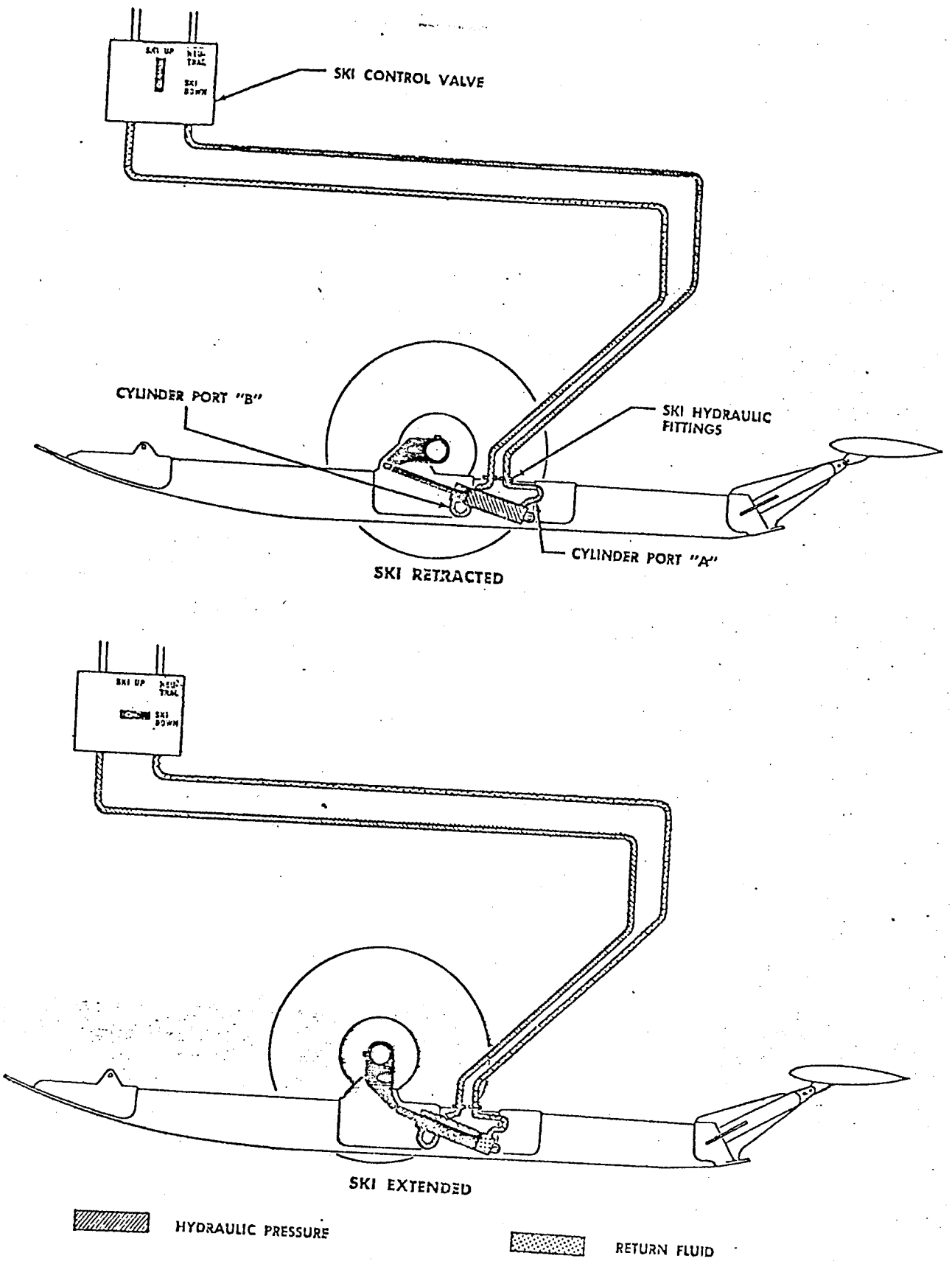

Figure 10-68. Main Ski Extension and Retraction

31,173

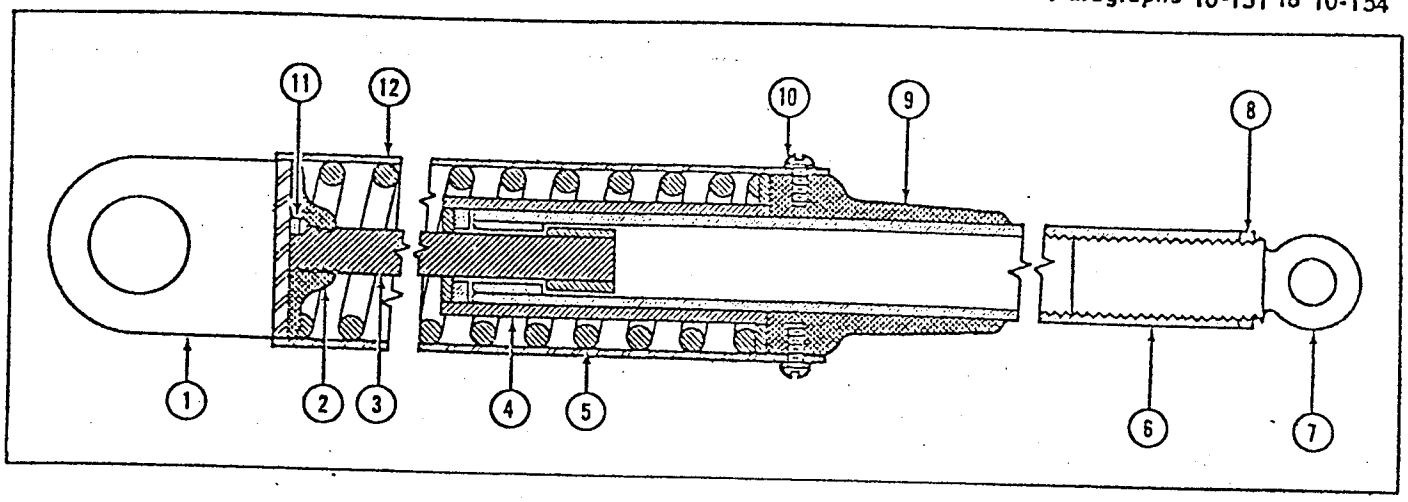

Figure 10-69. Tail Ski Rigger

31,174

Key to Figure 10-69

Item	Nomenclature	Item	Nomenclature
1.	Barrel Lug	7.	Eyebolt
2.	Piston Rod Flange	8.	Lock Nut.
3.	Upper Piston Rod	9.	Piston Rod Guide End
4.	Inner Compression Rod	10.	End Attaching Screws
5.	Rigger Spring	11.	Upper Rod Setscrew
6.	Lower Piston Rod	12.	Barrel

an upslope area. Park the airplane with the skis in the SKI UP position whenever possible to avoid freeze-down.

10-151. REMOVAL AND INSTALLATION OF COMPONENTS OF SKIS. Removal and installation of the components of the main and tail skis are accomplished as outlined in the following paragraphs. Disassembly, cleaning, and lubrication procedures are outlined where applicable.

10-152. REMOVAL OF MAIN SKI HYDRAULIC CYLINDER.
(See figure 10-70.)

a. Place the handle of the ski control valve at NEUTRAL.

b. Remove the bolt cover plate (48) and the bottom cutout plate (50).

c. Remove the screw and bolt through the bolt access hole.

d. Remove the cotter pin (56), nut (57), washer (58), and bolt (59).

e. Remove the cylinder through the bottom access hole and disconnect the flexible hoses (62 and 65) from the hydraulic cylinder. Have a receptacle available to catch the hydraulic fluid.

10-153. INSTALLATION OF MAIN SKI HYDRAULIC CYLINDER.

a. Install the cylinder through the bottom access hole.

b. Attach the flexible hoses (62 and 65) to the hydraulic cylinder. The aft hose (62) connects to the A (aft) cylinder port, and the forward hose (65) connects to the B (forward) cylinder port *(see figure 10-68.)*

Note

Be sure that the cylinder to be installed includes the proper end fitting *(see figure 10-70)*. The cylinder in the left ski requires an end fitting, AWSR 3190-1, and the cylinder in the right ski, an AWSR 3190 fitting.

c. Attach the cylinder to the pulloff fitting with a bolt (59), washer (58), and nut (57). Install and secure the cotter pin (56).

10-154. REMOVAL OF AERODYNAMIC RIGGER.
(See figure 10-70.)

a. Loosen the nuts (33) and the adjusting bolts (32).

b. Remove the cotter pins (28), nuts (29), washers (30), and bolts (31).

c. Supporting the rigger at both sides, remove the rigger arms from the clevises.

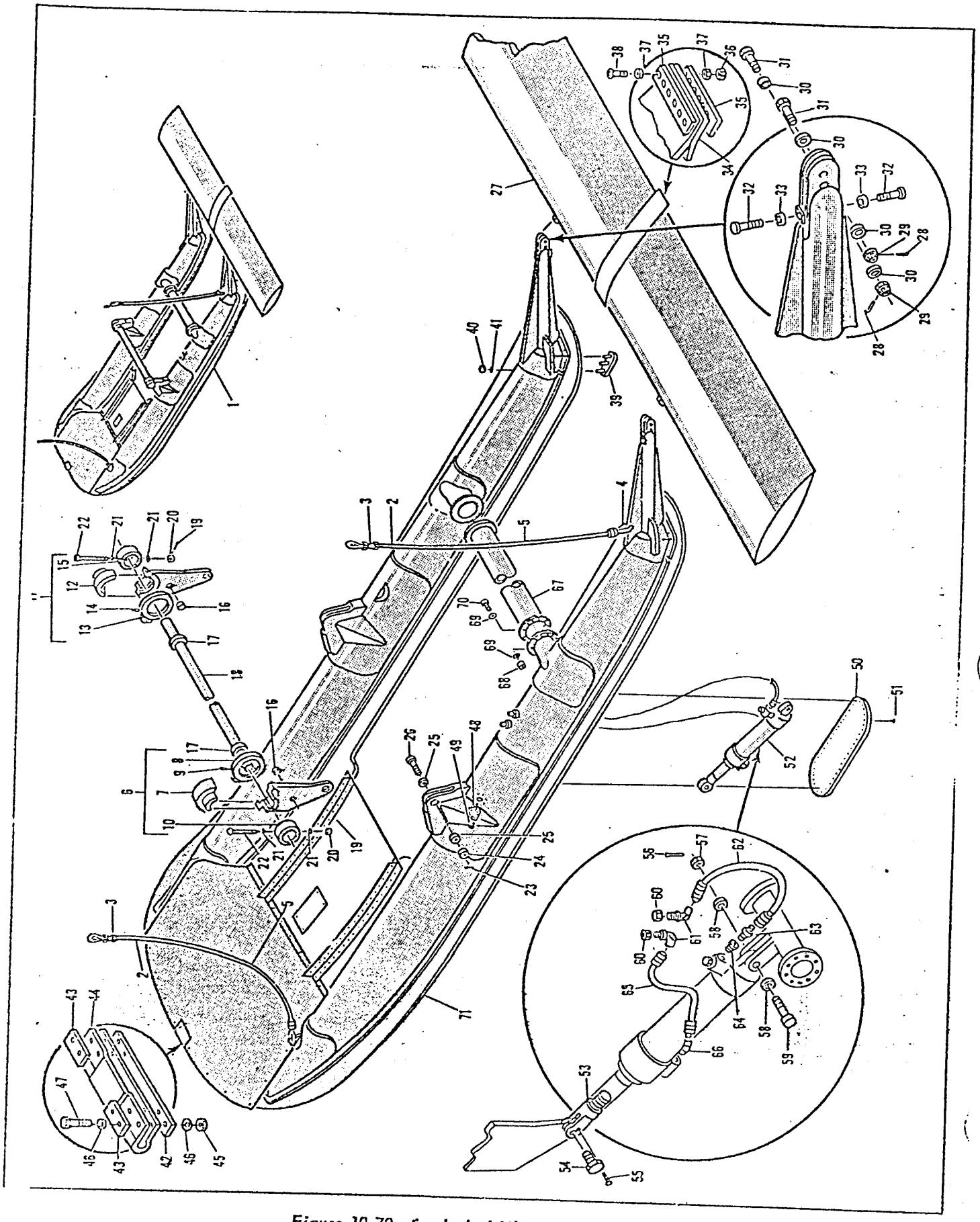

Figure 10-70. Exploded View of Main Ski

V2-7

10-155. INSTALLATION OF AERODYNAMIC RIGGER.

a. Support the rigger from both sides and install the rigger arms in the clevises.

b. Install the bolts (31), washers (30), and nuts (29). Install and secure the cotter pins (28).

c. Install and adjust the bolts (32) and tighten the nuts (33).

10-156. REMOVAL OF TAIL SKI RIGGER. *(See figure 10-71.)*

a. Remove the upper bolt, washer, and nut from the tail wheel strut.

b. Remove nut (17), washers (18), bushing (19), and bolt (20).

c. Remove the tail ski rigger.

10-157. DISASSEMBLY OF TAIL SKI RIGGER. *(See figure 10-71.)*

a. Loosen the lock nut (21) and remove the eyebolt (22).

b. Remove the piston rod guide end (23) by detaching the screws (24) and washers (25).

c. Remove the rigger barrel (26), permanently mark the position of the flange (27) on the upper piston rod (30), in order that it may be set in the same position for assembly, and then detach the flange from the rod (30) by removing the screw (28) and the spring (29).

d. Slide the upper piston rod (30) through the center of the lower piston rod (31), and remove the inner compression rod (32).

10-158. CLEANING OF TAIL SKI RIGGER. Keep all bushings and bearing surfaces clean and well lubricated. If the tail ski rigger is disassembled, soak all parts thoroughly in an approved solvent before reassembly.

10-159. LUBRICATION OF TAIL SKI RIGGER. Before reassembling the tail ski rigger, lubricate the spring, rods, and the inside of the barrel with grease, Specification MIL-G-7118.

10-160. ASSEMBLY AND INSTALLATION OF TAIL SKI RIGGER. *(See figure 10-71.)*

a. Slide the upper piston rod (30) through the center of the lower piston (31), and install the inner compression rod (32) over the upper end of the rod (31).

b. Install the spring, compressing it so that the flange (27) can be screwed onto the end of the rod (30) to the exact location indicated by the mark applied during disassembly. After installation, insert the setscrews (28) in the flange.

c. Slide the barrel (26) over the flange (27). Install the piston rod guide end (23) with screws (24) and washers (25).

d. Install the eyebolt (22) and tighten the lock nut (21).

e. Install the tail ski rigger.

10-161. **MODIFICATIONS PRIOR TO INSTALLATION OF MAIN SKIS.** Before the main skis can be installed, modifications must be made to the airplane which include installation of main landing gear wheel axle spacer bushings, installation of nacelle reinforcing plates, installation of ski hydraulic system, modification to the airplane's hydraulic system engine pump selector system, and relocating the power plant oil coolers.

10-162. INSTALLATION OF MAIN LANDING GEAR WHEEL AXLE SPACER BUSHINGS. *(See figures 10-70 and 10-72.)* In order to accommodate the axle spacer bushings, the following rework will be required:

a. Jack up the airplane.

b. Remove the brake torque collars and wheels.

c. Machine the collars, as indicated in figure 10-72.

d. Install the axle spacer bushings *(17, figure 10-70)*, by pressing them into the machined recess in the brake torque collar.

e. Remove the wheel axle, and then remove the bolt or rivet securing the fixed bearing retaining collar on the wheel axle. Drill and tap the hole to receive either a $\frac{5}{16}$- or a $\frac{7}{16}$-inch cap screw, depending on the size of the existing hole, and secure a $\frac{1}{2}$-inch long cap screw of the proper size. This bolt must not protrude into the center of the airplane axle to interfere with the installation of the ski axle, which passes through the center of the airplane axle.

f. Install the wheels and brake torque collars, fastening the collars to the axle with the torque collar clamp locks supplied with the skis. The clamp locks replace the bolts which secured the brake torque collars to the axles.

g. Remove the jacks from the airplane.

10-163. INSTALLATION OF NACELLE REINFORCING PLATES.

a. Fabricate two $4\frac{1}{2}$- by $1\frac{3}{4}$-inch reinforcing plates from .050 2024 T4AL material.

b. Rivet the two reinforcing plates to the bottom of the nacelles, next to the drag strut, inboard of the nacelle centerline.

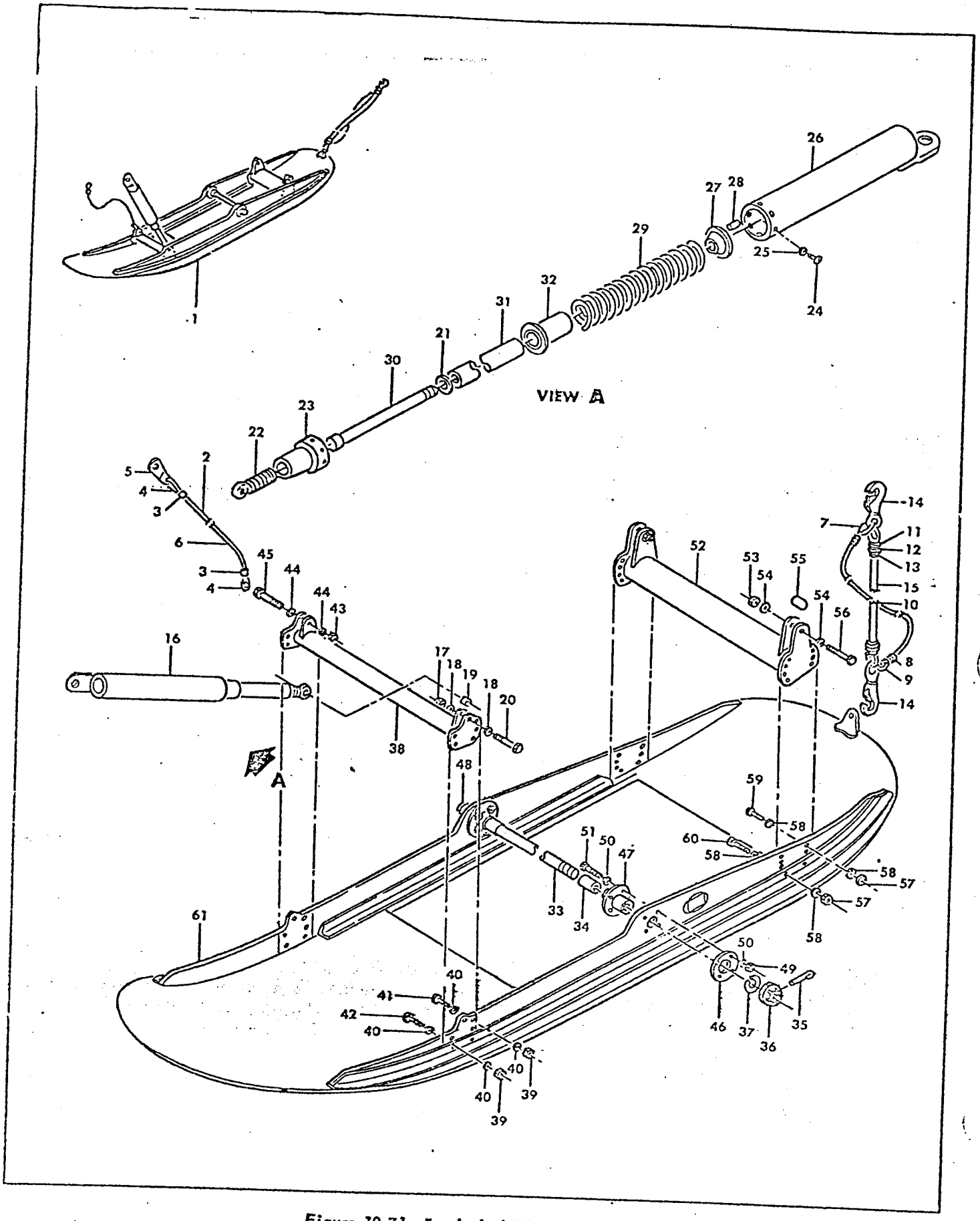

Figure 10-71. Exploded View of Tail Ski

31,176

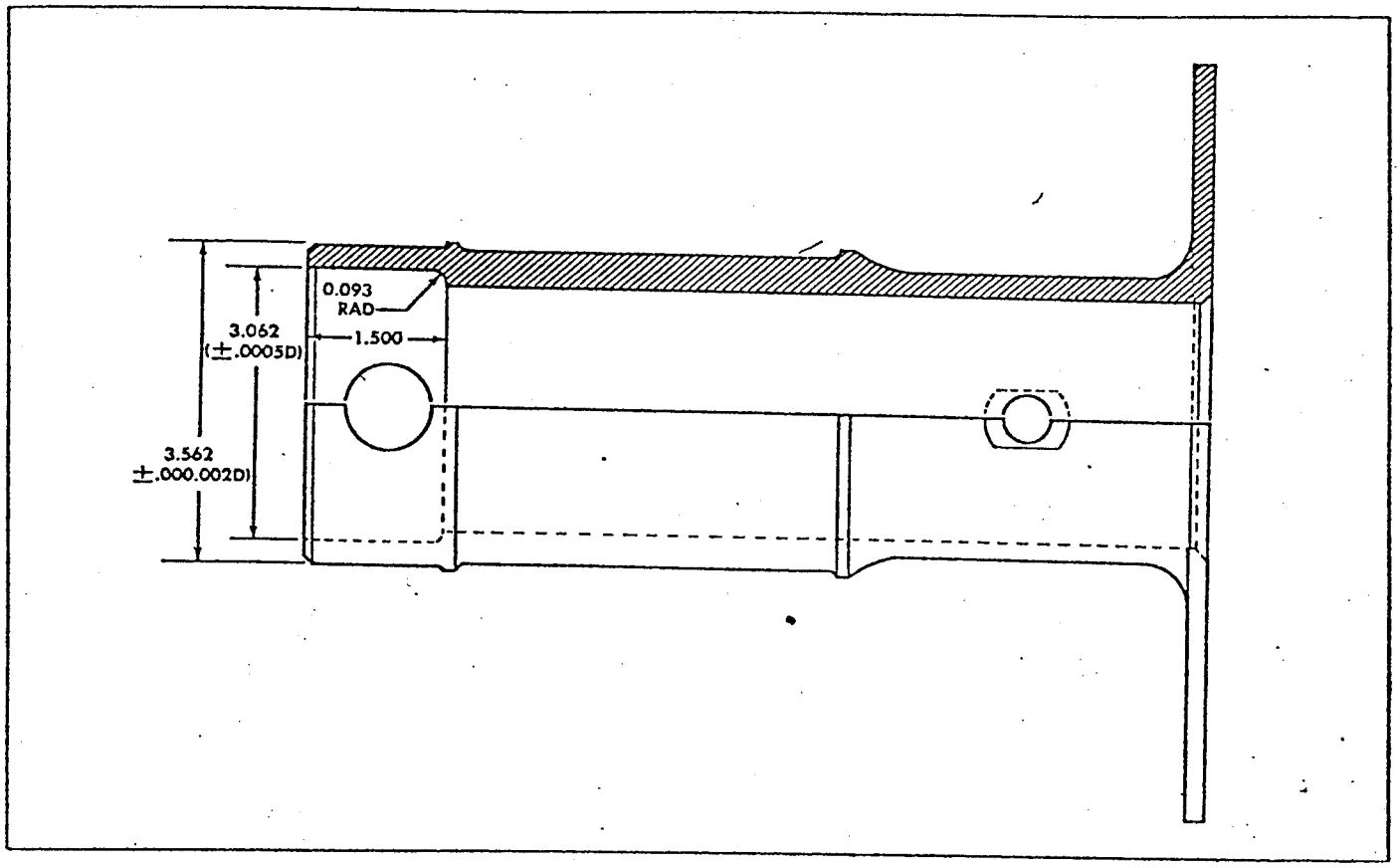

Figure 10-72. Specification for Machining Brake Torque Collars

31,177

c. Route the airplane brake hydraulic pipes in each nacelle so that they pass through the center hole in the reinforcing plates.

d. Install the striker plates on the airplane nacelles. To attach the striker plates, pick up the existing rivet pattern.

10-164. INSTALLATION OF SKI HYDRAULIC SYSTEM.
(See figure 10-66.)

a. Mount the selector valve and bracket on the removable floor panel in the flight compartment to the left of the pedestal.

b. Cut a hole in the flooring to accommodate the hydraulic piping to the valve and connect the pressure and return line to the airplane's hydraulic system.

c. Safety the ski control valve in NEUTRAL to prevent the flow of fluid through the valve during the ski installation.

d. Install the up pressure and down pressure pipes from the selector valve aft to a point just forward of the front wing spar and install tee fittings.

e. Install the lines from the tee fittings out through each nacelle and through the reinforcing plates.

f. Connect the lines to the pressure hoses of the ski assembly.

CAUTION

The ski control selector valve handle must be safetied in the NEUTRAL position and hose assemblies on the drag strut must be plugged whenever the skis are not installed.

10-165. ALTERNATE INSTALLATION FOR SKI HYDRAULIC SYSTEM (UTILIZING BLOWER CONTROL VALVE.) In accomplishing the installation of the ski hydraulic system on airplanes which have had the blower shift system disconnected, the hydraulic ski retracting mechanism can be connected to the blower shift hydraulic system fittings installed.

a. Disconnect the blower shift pipes at the point of passage from the wing root into the wheel well of the engine nacelle. The pipes leading forward from this point to the firewall are then capped and remain installed.

b. Install a reducer fitting (5/16 to 1/4 inch) on the existing blower pipes to accommodate the 5/16-inch tubing and fittings furnished with the ski installation kit.

c. Rivet a reinforcing patch to the airplane plating just below and forward of the installed hydraulic pipes and the two 90-degree bulkhead fittings.

d. Install two hydraulic pipes (5/16-inch aluminum tubing) to the blower pipes at the exterior of the nacelle, on the lower inboard side, and route them along the fairing between the nacelle and lower wing surface to the point of the drag strut attachment.

e. Fabricate and rivet a bracket to the airplane, and install two additional 90-degree bulkhead fittings.

f. Attach the pipes to the underside of the wing with clamps secured with blind rivets to minimize any vibration.

g. Fabricate a placard and attach it to the blower selector valve cover plate to indicate the SKI UP, SKI DOWN, and NEUTRAL positions.

h. Install light bulbs in the high-blower indicators located at the pilot's left side panel, to indicate extension and retraction of the main skis.

10-166. MODIFICATION OF HYDRAULIC SYSTEM ENGINE PUMP SELECTION SYSTEM. *(See figure 10-73.)* In accomplishing the modification to the engine pump selection system to permit the pilot to select engine pump pressure by either the right engine pump or both engine pumps in order to decrease the time required for various operations such as wheel and ski retraction, the engine pump selection system should be reworked as follows:

a. Relieve the hydraulic system pressure until the main system gage reads zero psi.

b. Remove the shield from the hydraulic system panel.

c. Remove the floor in the baggage compartment aft of the hydraulic panel.

d. Disconnect the right engine pump pressure line from the aft port of the selector valve.

e. Install a permanent cap on the aft port of the selector valve.

f. Cut the right engine pump pressure line above the adel block next to the selector valve and also below the second adel block. Leave the remainder of the line in the adel blocks for a spacer.

g. Remove the elbow from the upstream side of the filter and install a tee fitting.

h. Install a check valve in the right engine pump pressure line. Connect the line to the tee fitting in the filter making certain that the flow arrow on the check valve points toward the filter.

i. Remove the union nearest the selector valve in the left engine pump pressure line and replace it with a check valve with the flow arrow pointing toward the selector valve.

j. Install the floor in the baggage compartment aft of the hydraulic panel.

k. Enlarge the cutout in the shield as required and install the shield around the hydraulic panel.

l. Change the placard on the selector valve as shown in figure 10-73.

10-167. RELOCATION OF POWER PLANT OIL COOLERS. *(See figures 10-74 and 10-75.)*

a. Remove the power plant accessory cowling.

b. Drain the power plant oil system.

c. Remove the fire detector from the power plant oil cooler and install it on the lower side of the firewall. *(See figure 10-74.)*

d. Disconnect the hoses from the oil cooler.

e. Remove the oil cooler and mounting brackets.

f. Plug the mounting holes in the firewall.

g. Place the oil cooler in position on the upper inboard side of the power plant cowling.

h. Cut out the upper cowling to fit around the oil cooler. *(See figure 10-75.)*

i. Position the oil cooler so that the cowling will fit.

j. Secure the power plant oil cooler brackets.

k. Reroute the hoses as shown in figure 10-74.

l. Install the cowling.

CAUTION

DO NOT USE A-30000L MAIN SKIS WITH FILLER PLATE INSTALLED UNTIL OIL COOLERS HAVE BEEN RELOCATED.

10-168. ATTACHING MAIN SKIS TO AIRPLANE. *(See figure 10-70.)*

a. Insert the axle stub and tube (18) through the center of the airplane axle until it protrudes equally on both sides.

b. Remove the aerodynamic rigger (27) from the skis by detaching the cotter pins (28), nuts (29), washers (30), and bolts (31).

c. Remove the rear torque tube (67) by detaching the nuts (68), washers (69), and bolts (70).

d. Place the two retaining collars (8 and 13), one over each brake torque collar, with the bevel facing out from the wheel.

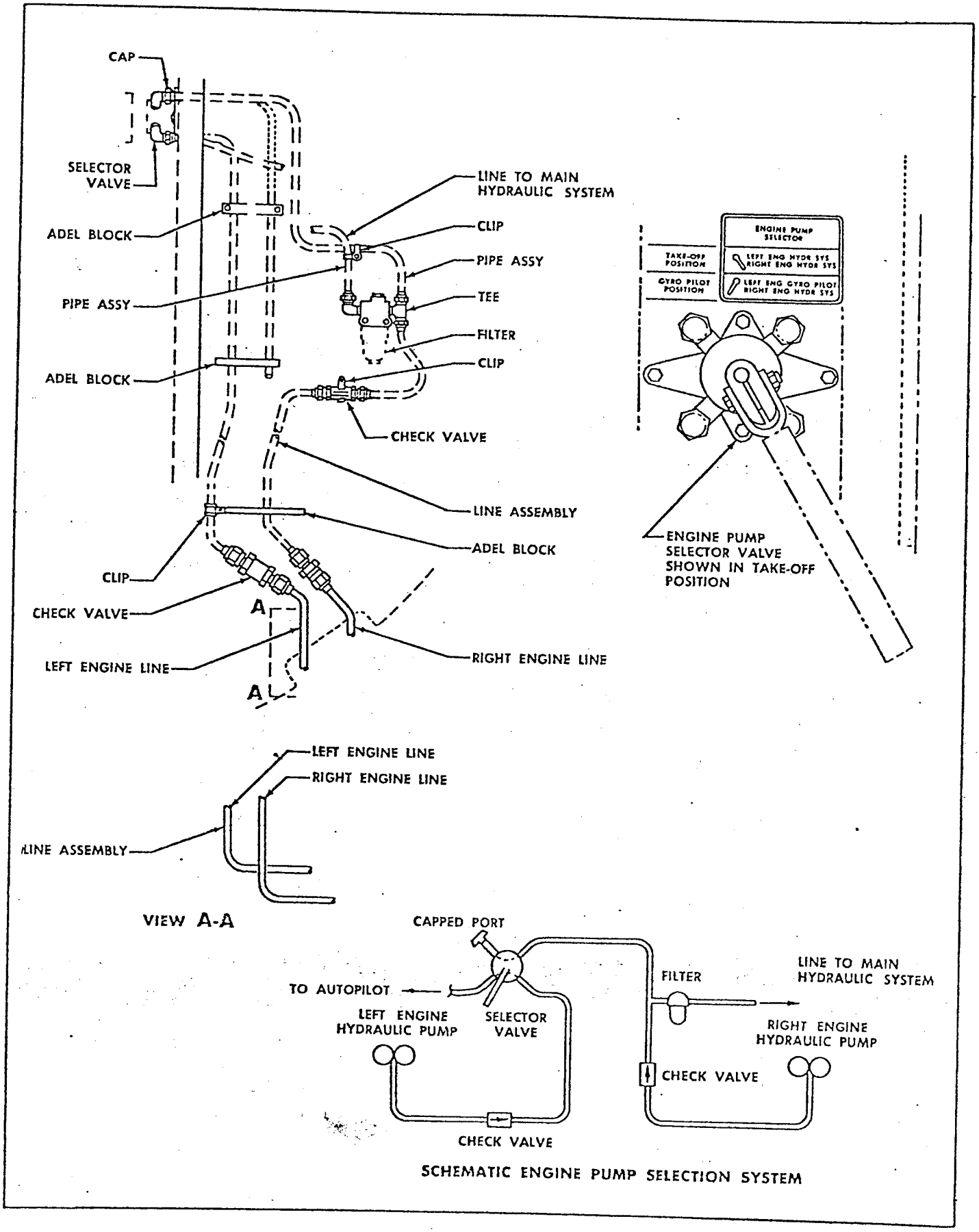

Figure 10-73. Hydraulic Engine Pump Selection System—Ski Configuration

V2-8

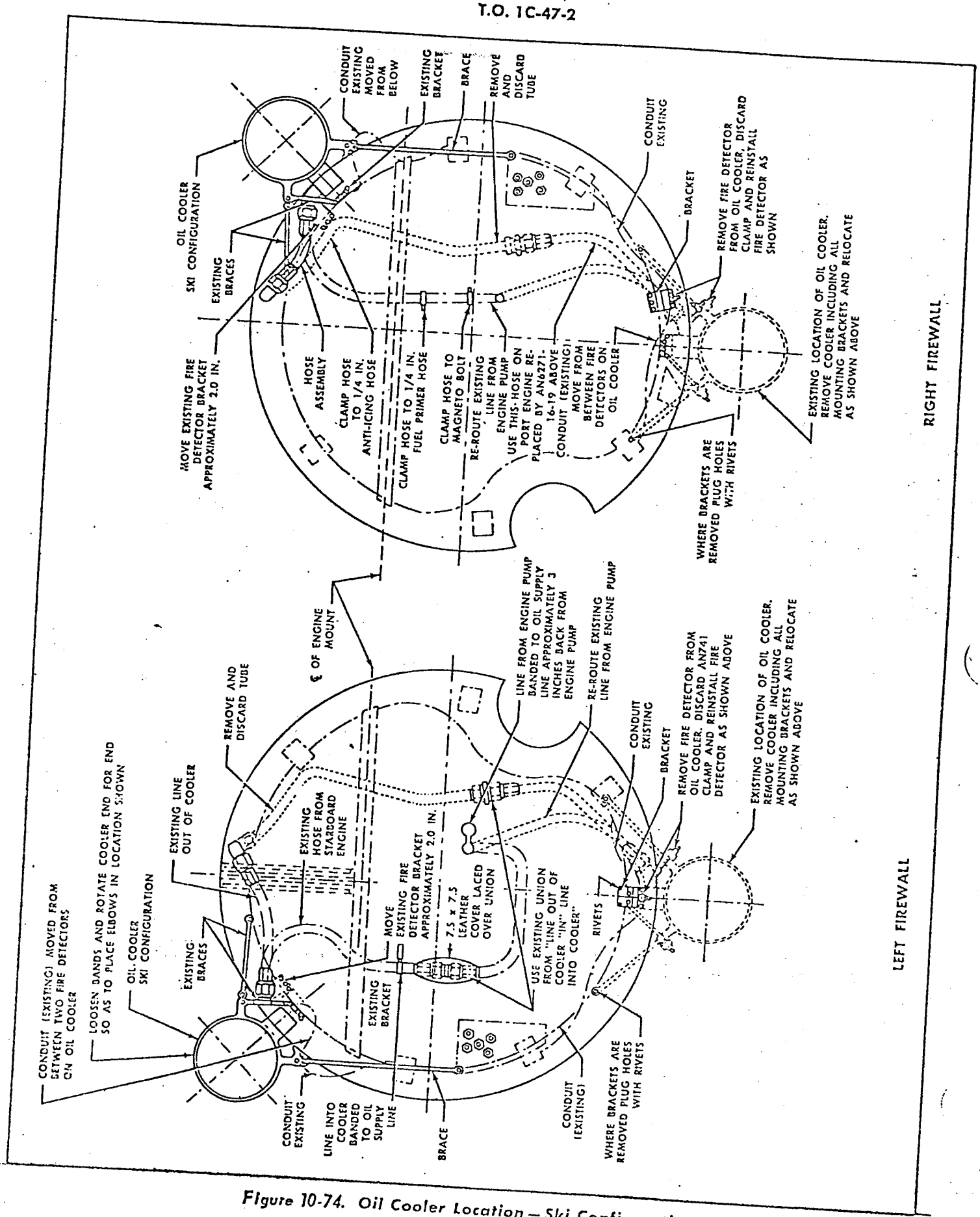

Figure 10-74. Oil Cooler Location — Ski Configuration

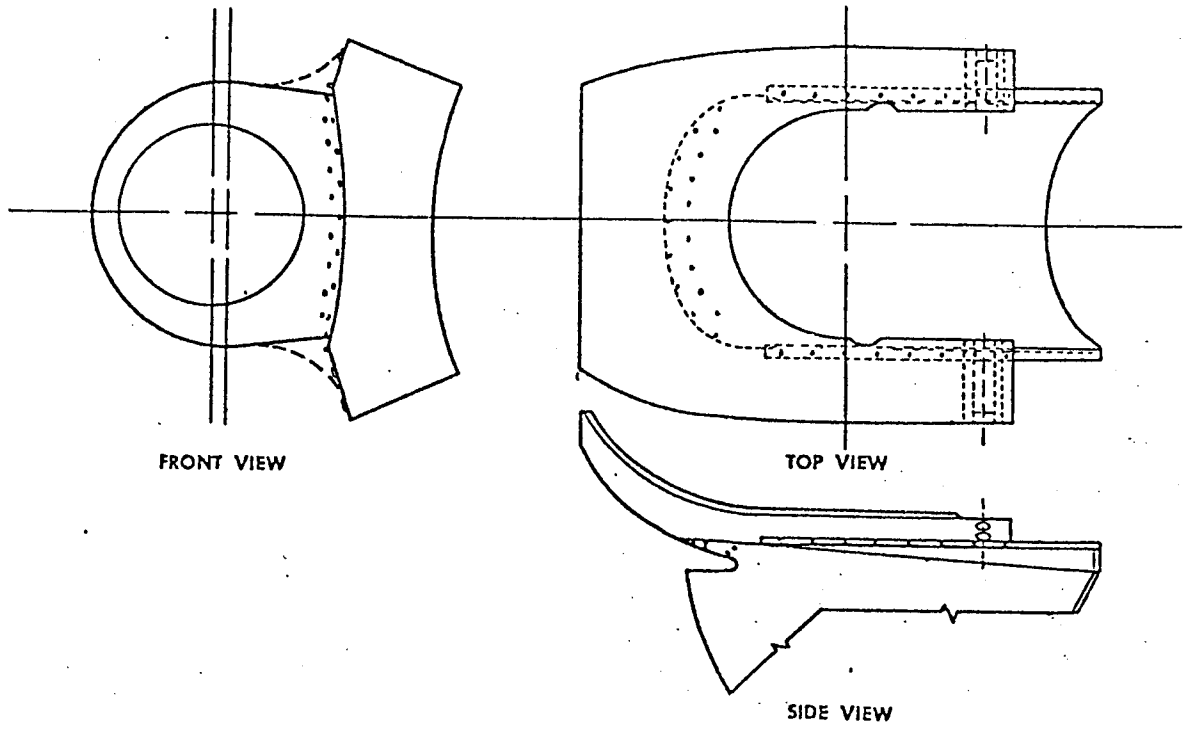

MODIFIED TOP COWLING WITH OIL COOLER FAIRING

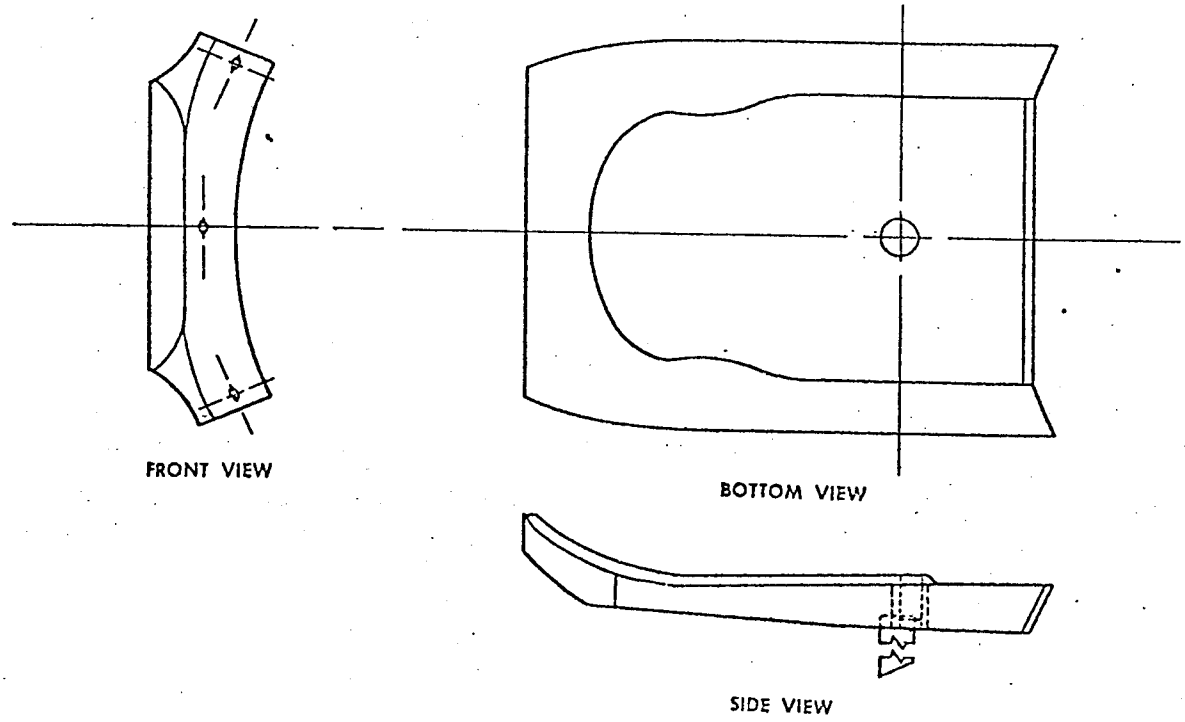

MODIFIED LOWER COWLING

Figure 10-75. Modified Engine Cowling—Ski Configuration

V2-45

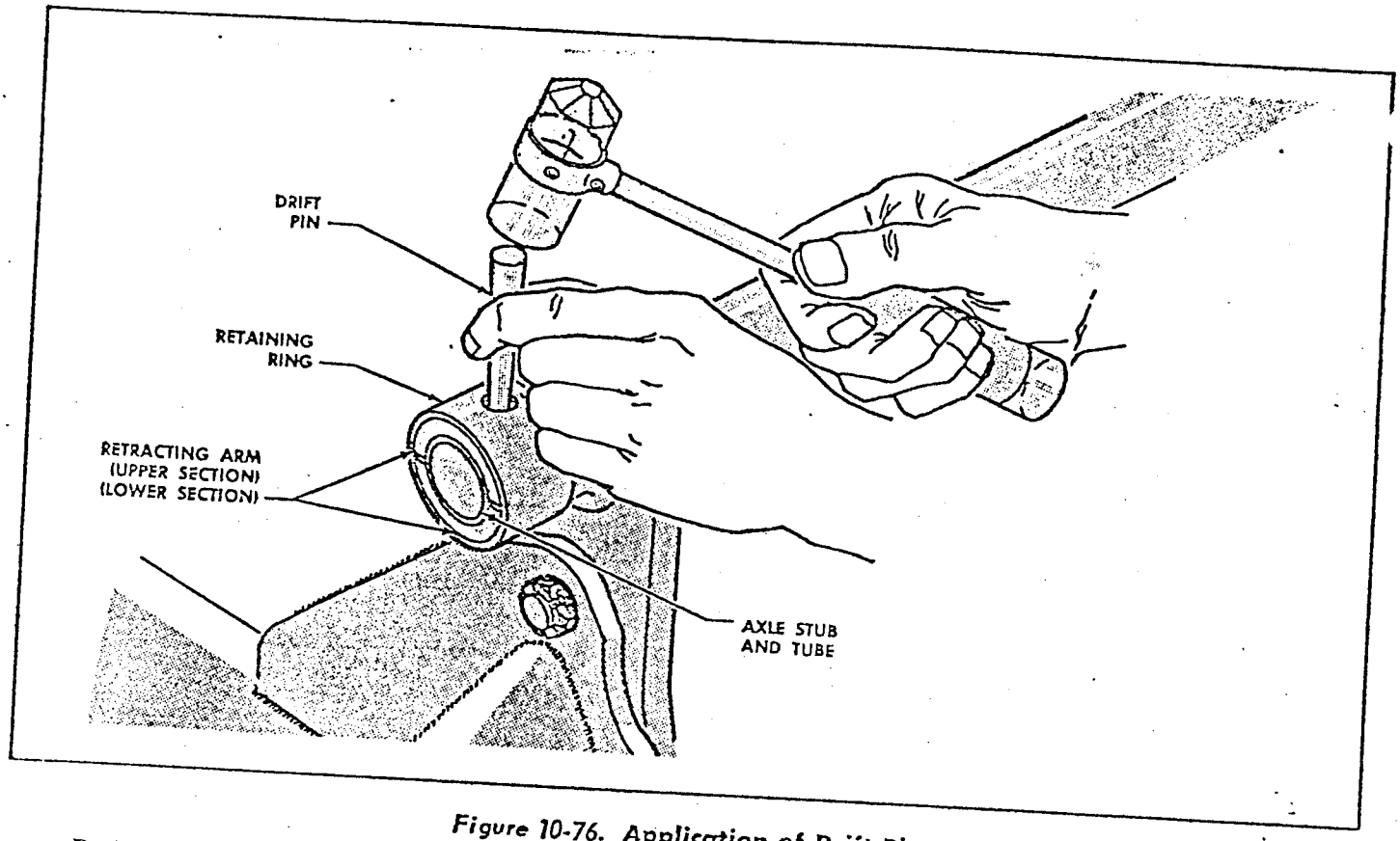

Figure 10-76. Application of Drift Pin

31,178

e. Position the ski so that the airplane wheel is located in the center of the ski. Hydraulic fittings are to be located on the inboard side.

f. Lift the ski 1 or 2 inches with blocks or jacks, locating the lower half of the split-lock caps on the retracting arms to the axle stub and tube and aligning the bolt holes in both parts.

g. Position the upper half of each split-lock cap; slide the collars (8 and 13) over the two halves, and tighten the setscrews.

Note

Position the retaining arm collars (8 and 13) with the lugs 90 degrees forward from vertical with the skis fully extended. The lugs will then be located directly above the axle stub and tube when the skis are retracted.

h. Install the retaining rings (10 and 15). Align the bolt holes, using a soft mallet to tap and slide the rings into proper position. If the bolt holes do not align after the rings have been installed, use a drift pin to move the holes into alignment *(see figure 10-76)*.

i. Insert bolt (22, figure 10-70) through the holes in the rings, arm, and axle. Install washers (21) and nuts (20). Tighten the nuts and secure them with cotter pins (19).

j. Install the rear torque tube (67) with bolts (70), washers (69), and nuts (68).

k. Install the rigger (27) with bolts (31), washers (30), nuts (29), and cotter pins (28). Adjust the rigger as outlined in paragraph 10-171.

l. Attach the limiting cables of the ski to the airplane. The forward cables attach to the lower inboard engine support lug and the aft cables to the drag strut attachment lug.

m. Connect the hydraulic hose assemblies to the fittings on the ski. The SKI UP pressure hose connects to the aft fitting, and the SKI DOWN hose connects to the forward fitting.

10-169. INSTALLATION OF TAIL SKI.

(See figure 10-71.)

a. Place a jack under the tail of the airplane.

b. Remove the tow lugs from the tail wheel axle and install the bronze bushings (34).

c. Position the ski under the wheel and raise it until the axle hole in the ski aligns with the center of the airplane axle. Install the ski axle (33) through the ski axle hole and into the bushings installed in the airplane axle and then through the opposite ski axle hole. After the axle is positioned, secure it with washers (37), nuts (36), and cotter pins (35).

d. Remove the upper bolt from the tail wheel strut and also remove enough washers to allow attachment of the limiting cable (2) on the right side of the

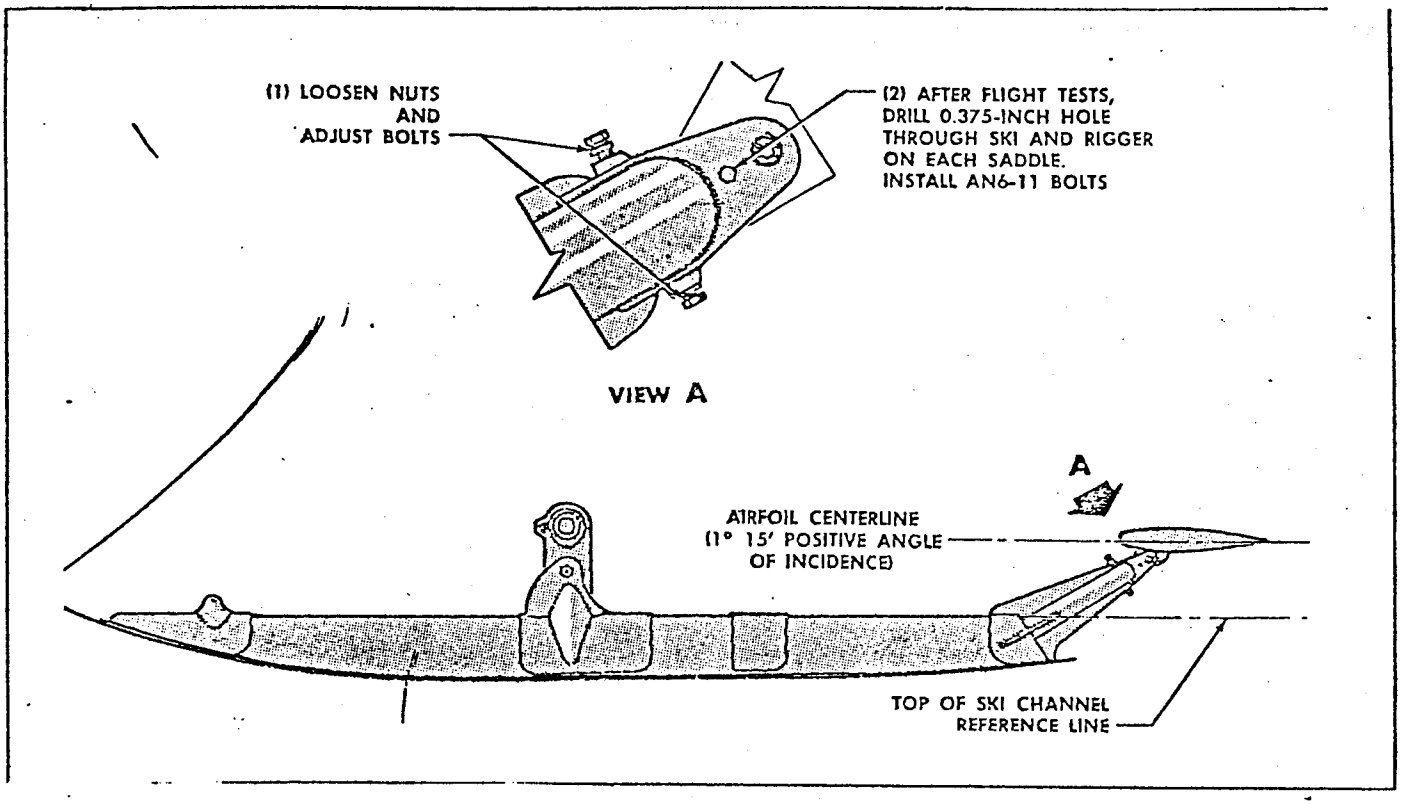

31,179

Figure 10-77. Aerodynamic Rigger Adjustment

strut and the tail ski rigger (16) on the left side of the strut. Reinstall and secure the upper bolt in the tail wheel strut.

e. Attach the lower end of the rigger to the ski with the bolt (20), bushing (19), washers (18), and nut (17).

Note

The proper angle of incidence for the tail ski is determined by the length of the mechanical rigger. The length of the rigger from center to center of the holes located at each end should be $18\frac{3}{16}$ ($\pm\frac{1}{8}$) inches. Adjustment can be made by freeing the lock nut and then screwing the eyebolt in or out to obtain the specified length. Reset the lock nut on the eyebolt.

f. Attach the rear limiting cable (7) to the aft airplane jack pad, and to the cable pull-off fitting located at the rear of the tail ski.

10-170. TEST AND ADJUSTMENT OF AIRPLANE SKIS. Test and adjustment of the airplane skis are accomplished as outlined in the following paragraphs.

10-171. TEST AND ADJUSTMENT OF MAIN SKI ANGLE OF INCIDENCE.

a. After the skis have been installed, extend and adjust the aerodynamic rigger by means of the adjustment bolts *(32, figure 10-70)*. Adjust the rigger so that the centerline of the airfoil has an approximate 1-degree positive angle of incidence with respect to the top surface of the ski channels. A wood template is furnished to facilitate this adjustment. Tighten the check nuts and the rigger attaching nuts securely, after the angle of incidence has been established. Safety the attaching nuts with lockwire.

b. Test the skis during take-off, flight, and landing. Weight and balance factors may require a change in the ski angle of incidence for optimum performance. After the most satisfactory setting is definitely established, drill a 0.375-inch hole through each ski clevis and rigger attaching arm, as shown in figure 10-77, just forward and slightly below the rigger attaching bolt. Install a bolt, washer, and nut. Tighten securely and safety. This procedure will eliminate further adjustment and testing of the skis in case they are removed and then later installed on the airplane.

10-172. TESTING MAIN SKI RETRACTING MECHANISM. Station an observer to watch the movement of the skis when extended and retracted and operate the main ski retracting mechanism in the flight compartment. The skis should operate quickly and smoothly between the two positions. Note that the flexible hose assembles do not kink or bind and remain clear of the ski at all times. Tape the hoses together

just above the ski connections, if necessary. Make certain that the pressure and return pipes are properly connected by noting if the skis respond correctly to the SKI UP and SKI DOWN locations on the control valve.

10-173. TEST AND ADJUSTMENT OF TAIL SKI RIGGER OPERATION. The proper angle of incidence for the tail ski is determined by proper adjustment of the tail ski rigger. Check the operation of the rigger by operating the ski up and down and observing whether or not the ski returns to the neutral position of the rigger.

10-174. TEST AND ADJUSTMENT OF MAIN SKI LIMITING CABLES. The main ski limiting cables should be set with the oleo strut in the static position; the forward cable will check the negative pitching of the skis at —20 degrees, and the aft cable will check the positive pitching of the ski at +15 degrees. These angles of the ski are relative to the thrust line, measured on the top side of the ski bottom, on the flat portion of the ski aft of center. In the event that the cables need to be altered in length to meet these requirements, they can be adjusted by loosening the safe-line clamps *(3, figure 10-70)*, sliding the cable, and then tightening the clamp nuts.

Note

The tail ski limiting cables are fabricated to the required length at the factory and are not adjustable.

SECTION XI

FLIGHT CONTROLS

11-1. FLIGHT CONTROL SYSTEMS.

11-2. GENERAL DESCRIPTION. *(See figure 11-1.)* The movable flight control surfaces of the airplane, controlled by the pilot and co-pilot, consist of wing flaps, rudder and trim tab, elevator and trim tab, and aileron and trim tab (trim tab on the right aileron only). All of these surfaces, except the wing flaps, are operated manually. The wing flaps are hydraulically operated. An autopilot provides automatic control if desired. External "off neutral" control locks are used to prevent damage to the control surfaces and linkage from gusts and high-velocity wind.

11-3. CONTROL CABLES.

11-4. Airplane cables are made from high-tensile strength wires which are grouped and formed into strands. These strands are put through a preforming process, which forms them into the shape they will have in the finished cable. As a result of this preforming process, the cables do not have a tendency to fray or unlay when they are cut. Cable construction is designated by numbers. The first number denotes the number of wires in the strand; for example, a 7 x 19 cable is composed of 7 strands with 19 wires in each strand. The diameter of a cable is the diameter of the circle that will enclose the cable. To obtain an accurate measurement of the diameter of a cable, rotate the gage completely around it.

Fittings are swaged onto the cables with a swaging machine. The sleeves of the fitting, being softer than the cables, are pressed hard enough to cause the inside of the sleeve to take the shape of the cable. After a fitting has been swaged to a cable, it cannot be removed and used again.

11-5. INSPECTION OF SURFACE CONTROLS. Inspect the surface controls at regular intervals and after exposure to severe operating conditions. A thorough inspection of the surface controls includes the following operations.

a. Check the security and condition of all pulley brackets.

b. Make certain that all pulley guard pins are in place.

c. Inspect all guides, pulleys, pulley attach bolts and pulley flanges for cracks, wear and improper alignment. Replace any that are found defective.

d. Inspect all pulley bearings for general condition.

e. Check that all cotter pins are secure.

f. Inspect the fairleads and rubstrips for cracks and wear and improper alignment. Replace any that are worn or damaged.

g. Inspect all turnbuckles for proper safetying *(see figure 11-2)*.

h. Examine the control cables for broken wires, fraying, untwisting, improper alignment of cable drums and pulleys, wavy appearance, and proper tension. Rust, dust, or dirt at the point of operation will tend to shorten the life of the cable. A cable passing around a pulley will weaken from fatigue caused by bending, internal friction, and the wearing of wires passing over one another. To check the cables for broken wires, run a cloth dampened with general purpose low-temperature oil, Specification MIL-L-7870, over them. The cloth will help to prevent injury to the hands from broken wires. Replace any control cables that contain more than six broken wires within 1 inch of cable length. Before a new cable is installed, it should be preloaded to 60 per cent of its rated strength and the tension held for 1 minute. This operation will preset the cable length.

Note

Cable assemblies received from the Douglas Aircraft Company have been prestretched and this operation will not be necessary.

i. Inspect all bearings, screws, torque tubes, connecting rods, horns and support brackets for loose or missing bolts, elongated bolt holes, cracks, security, proper safetying and evidence of wear or binding.

j. Check hinges including hinge bearings, eye bolts and attachments, including clevises and clevis attach bolts of all surfaces for cracks, wear and security of attachments.

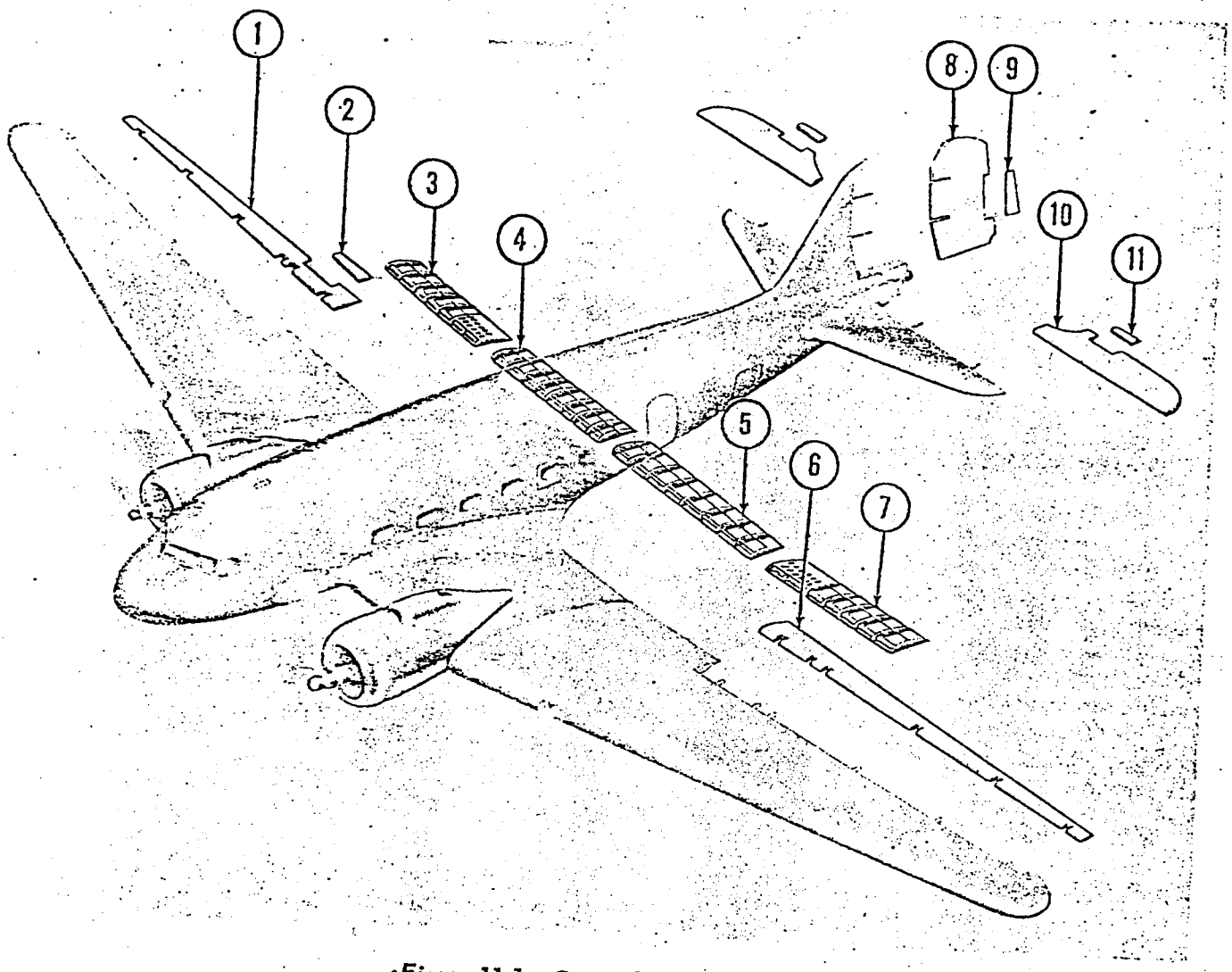

Figure 11-1. Control Surfaces

33,117

Key to Figure 11-1

Item	Nomenclature	Item	Nomenclature
1.	Right Aileron	7.	Left Outer Wing Flap
2.	Aileron Trim Tab	8.	Rudder
3.	Right Outer Wing Flap	9.	Rudder Trim Tab
4.	Right Center Wing Flap	10.	Elevator
5.	Left Center Wing Flap	11.	Elevator Trim Tab
6.	Left Aileron		

k. Examine all rod ends, bellcranks, hinge bearings, and cable end fittings for roughness, wear, corrosion, and misalignment. Replace all defective parts.

l. Inspect all actuating pushrods, and check that enough clevis threads are engaged to prevent a safety-wire from being passed through the pushrod inspection hole.

m. Operate each control system and check for free movement of controls, bellcranks, pulleys, levers, and drums; also check the cables for correct tension (*see figure 11-3*). Check for the correct degree of travel, direction of movement, and unrestricted travel in the control units.

n. Inspect the control units for damage or corrosion, and for proper clearance.

o. During removal, installation and rigging of the cables, the corrosion preventive, Specification MIL-C-16173, is inadvertently wiped off. Refer to Section II for proper application of corrosion preventives and lubrication of the flight controls.

p. Inspect bonding straps for condition and security.

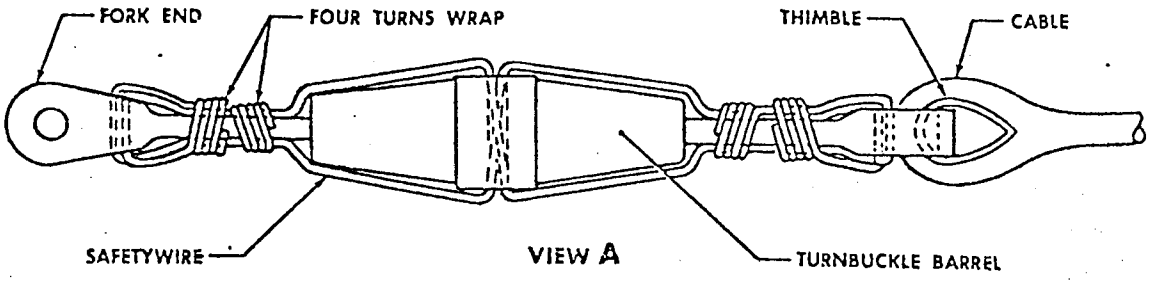

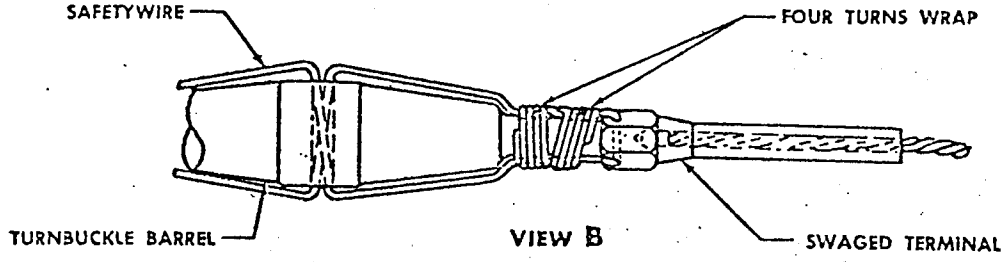

TURNBUCKLE SAFETYING REQUIREMENTS

CABLE SIZE (INCH)	MINIMUM NOMINAL DIAMETER OF WIRE INCONEL (INCH)	*ZINC COATED STEEL (INCH)
1/16	0.020	0.032
3/32 or 1/8	0.032	0.041
5/32 and greater	0.040	0.047

MATERIAL	SPECIFICATIONS
Nickel-Chromium-Iron Alloy (Inconel)	Federal QQ-W-390, Condition A, Annealed
*Carbon Steel-Zinc Coated	Federal QQ-W-461, Type 11, Annealed

*Zinc coated steel wire may be used in case of critical shortage only.

DOUBLE WRAP SAFETYING PROCEDURE

1. The assembled turnbuckle should show the last thread on each turnbuckle shank as flush with the end of the barrel. This is considered the best position of the shanks relative to the barrel. The shank may be threaded into the barrel to any depth (no threads visible), provided enough room is left on the shank for the prescribed safetying procedure outlined in steps 2 through 8. However, not more than three threads may be exposed on the threaded portion of the turnbuckle shank except for threads on AN666 terminals. AN666 terminals may project from the barrel as follows:

Cable Diameter (Inch)	Thread Extension Maximum (Inch)
1/16-3/32	0.75
1/8 -7/32	0.85
1/4 -5/16	1.00

2. Cut two lengths of the specified wire (see charts), each equal to four times the length of the turnbuckle.
3. Pass the two wires through the hole in the hole in the center of the turnbuckle and bend the ends 90 degrees toward the ends of the turnbuckle.
4. Pass the ends of the wires through the eye of the turnbuckle, or through the yokes of the fork ends, whichever is applicable. (For swaged or soldered turnbuckle ends, see step 8, following.)
5. Bend the ends of both wires back toward the center of the turnbuckle and wrap each end of one wire four times around the shank, binding the wrapping wires in place.
6. Wrap the ends of the second wire four times around the shank in the opposite direction from the first wire.
7. Clip the ends of the wire and bend them closely in place. The finished safety is shown in view A.

   Note

   If the above method exposes the wire passing through the eye to chafing, the wire should be put through the thimble of the cable or some other suitable attachment point.
8. For swaged or soldered turnbuckle ends, pass one wire through the hole in the terminal, loop it over the free end of the other wire and wrap both ends as shown in view B.

33,118

Figure 11-2. Turnbuckle Safetying Procedure

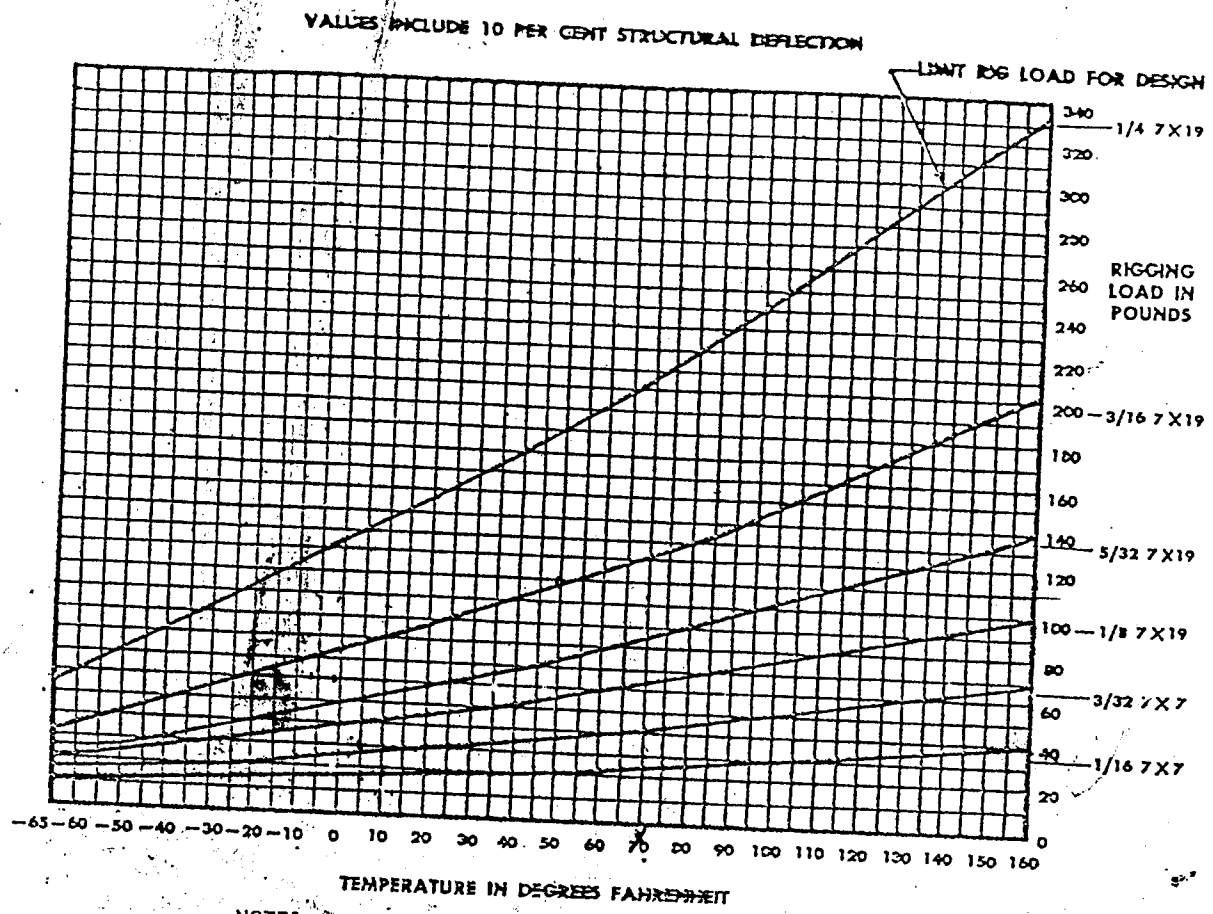

NOTES:

1. RELIABLE TENSION METERS MUST BE USED FOR ADJUSTING THE RIGGING LOADS AND THE ACCURACY OF THE RIGGING LOAD MAINTAINED WITH 10 PER CENT ON 1/8-INCH CABLES AND LARGER, AND WITHIN 5 POUNDS ON 3/32- AND 1/16-INCH CABLES.

2. IN CASES WHERE TWO CABLES JOIN A THIRD, THE LOAD ON THE THIRD CABLE WILL BE THE SUM OF THE LOADS OF THE FIRST TWO CABLES. TENSION ON THIRD CABLE SHALL BE DERIVED FROM CHART. TENSION ON CABLES ONE AND TWO SHALL BE EQUALLY DIVIDED TAKING INTO CONSIDERATION CABLE SIZE.

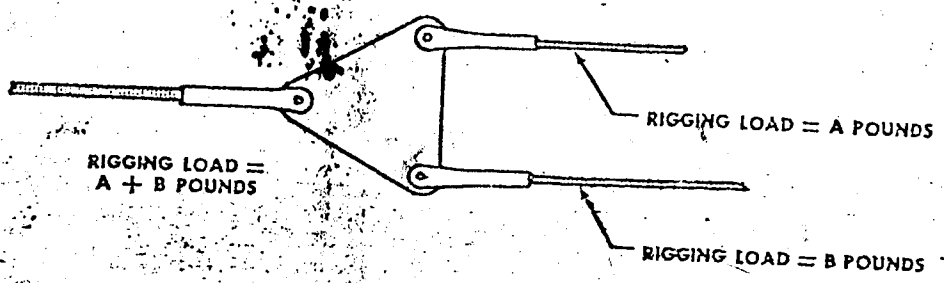

EXAMPLE OF DOUBLE SYSTEM RIGGING LOADS

Figure 11-3. Cable Rigging Tension Chart

33.119

11-6. PULLEYS AND PULLEY BRACKETS.

11-7. Pulleys are used throughout the airplane to change the direction of control cable routing. Brackets fastened to the structure of the airplane support the pulleys in position. Guard pins are used to maintain proper cable position in regard to pulleys.

11-8. FAIRLEADS AND RUBSTRIPS.

11-9. Fairleads and rubstrips are used throughout the airplane to prevent damage to cables due to their rubbing on the edge of holes and cutouts.

11-10. REMOVAL OF FAIRLEADS. Remove split fairleads by releasing the fairlead sections from the structure. To remove solid fairleads, release necessary cables at the nearest turnbuckles, remove the fairlead grommets, and pull the cables through the fairlead. Remove the fairlead.

11-11. INSTALLATION OF FAIRLEADS. Install split fairlead sections at appropriate locations in the airplane. To install solid fairleads, secure the fairlead in the proper position and route the affected cables through the fairlead. Tension the cables in accordance with the Cable Rigging Tension Chart *(see figure 11-3)*, and safety the turnbuckles.

11-12. WING FLAP SYSTEM.

11-13. **GENERAL DESCRIPTION.** The four metal wing flaps are the split-trailing-edge type and extend between the inboard ends of the ailerons. They are hinged to the underside of the airplane and are hydraulically operated to function as a single unit. The down movement of the flaps is 45 (±2) degrees.

11-14. **TROUBLE SHOOTING OF WING FLAP SYSTEM.** Trouble shooting of the wing flap system is accomplished as outlined in table 11-1.

11-15. **REMOVAL AND INSTALLATION OF WING FLAP SYSTEM COMPONENTS.**

11-16. REMOVAL OF WING FLAP OPERATING RODS.

a. Extend the flaps to the FULL DOWN position.

b. Disconnect the turnbuckles from all sections of the flap operating rods.

c. Remove the flap operating rods in sections. Remove the center section rod first, then remove the remaining sections of the rods.

11-17. INSTALLATION OF WING FLAP OPERATING RODS.

a. Install all sections of the flap operating rods.

b. Connect all the turnbuckles to the flap operating rods.

c. Retract the flaps to the NORMAL (faired) position.

11-18. REMOVAL OF WING FLAP.

a. Extend the flaps to FULL DOWN position.

b. Disconnect the turnbuckles from the flap-operating rods.

c. Support the flap (two men required) and pull the hinge pins.

d. Remove the flap by a gentle downward pull.

11-19. INSTALLATION OF WING FLAP.

a. Position the flap by interlocking the hinge tabs.

b. Align the hinge tabs and insert the hinge pin.

c. Connect the turnbuckles to the flap operating rods.

11-20. **OPERATIONAL TEST AND ADJUSTMENT OF WING FLAP SYSTEM.**

a. Check the alignment, movement, and travel of the hydraulic cylinder by sliding the cylinder rod forward and aft before connecting the flap-operating rods.

TABLE 11-1

TROUBLE SHOOTING - WING FLAP SYSTEM

TROUBLE	PROBABLE CAUSE	REMEDY
a. Uneven travel of flaps.	Lock nut at actuating tube union in center or outer wing has loosened, lengthening actuating rod.	Readjust actuating rod and tighten lock nut.
b. Flaps sluggish or fail to operate.	Aft bushing on hydraulic cylinder rod is out of line and binding rod.	Bend bushing into correct position.
	Internal leakage in actuating cylinder.	Install new cylinder.
c. Flap flutters.	Flaps not flush against trailing edge of wing.	Adjust turnbuckles so flaps will be snug with trailing edge of wing.
d. Flaps droop.	Fluid leakage at control valve on hydraulic control panel.	Tighten plug screw on valve. If not effective, install new valve.

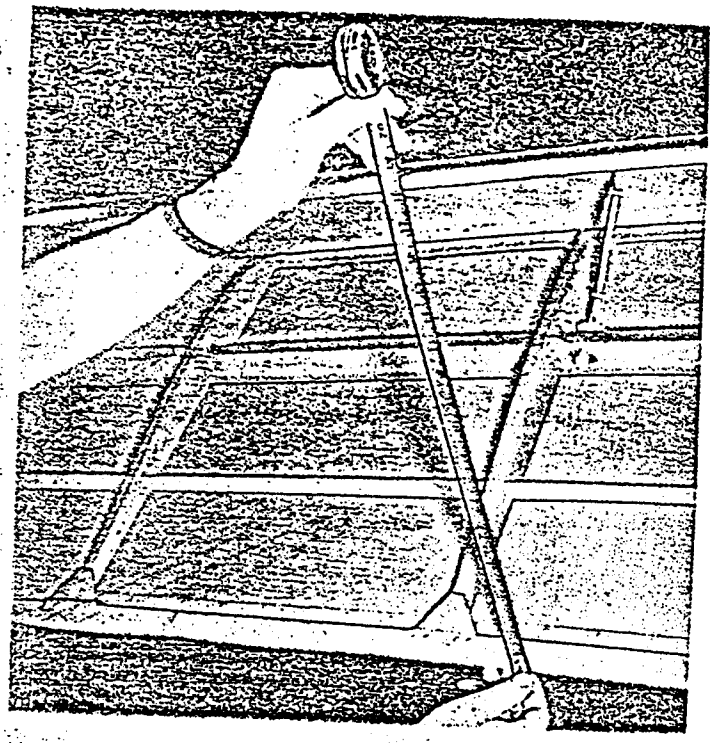

33,120

Figure 11-4. Wing Flap Travel Measurement

b. Connect the flap-operating rods to the actuating cylinder and take up the adjustment to make the rod as short as possible.

c. Connect all turnbuckles from the rod to the flap. Adjust the turnbuckles until the trailing edge of the flaps is approximately 18½ inches (45 [±2] degrees) below the trailing edge of the wing *(see figure 11-4)*.

d. Adjust the flap-operating rod until the angle of the turnbuckles to the rod is approximately 75 degrees. Distance between the nuts at the center wing union is approximately ⅞ inch. Distance between the rod ends in the outer wing is approximately 1½ inches.

e. With the hand pump, slowly pump the flaps into the UP position. Adjust the flap rods so that all surfaces have equal travel, and the trailing edges are in line Tighten the turnbuckles until the flaps press lightly on the felt pads in the FULL UP position.

CAUTION

Do not preload the wing flaps with the actuating cylinder. When the flaps are pressing lightly against the felt pads, the actuating cylinder is completely "bottomed."

11-21. RUDDER CONTROL SYSTEM.

11-22. GENERAL DESCRIPTION. *(See figure 11-5.)* The rudder control system consists of the rudder, the rudder trim tab, rudder pedals, and the connecting cables. Rudder movement is controlled by rudder pedals *(see figure 11-6)* which are adjustable forward and aft to accommodate pilots of varying stature. The pedals are connected to two torque tubes, with a horn attached to each tube. Cables extend aft from the horns to the empennage, where they connect to the rudder torque tube. Rudder pedal action is synchronized by a bus cable *(see figure 11-6)* extending forward from the rudder pedal torque tube horns to a special pulley. Rudder movement is limited by a rudder stop cable assembly *(see figure 11-5)* located in the fuselage aft section. The assembly, which is separate from the rudder control system, extends from a bracket *(see figure 11-5)* on the top surface of the horizontal stabilizer to the rudder torque tube horns. Movement of the rudder pedals is limited by the horns, which have adjustable bolts that strike against stops on the fuselage structure.

11-23. TROUBLE SHOOTING OF RUDDER CONTROL SYSTEM. Trouble shooting of the rudder control system is accomplished as outlined in table 11-2.

TABLE 11-2
TROUBLE SHOOTING - RUDDER CONTROL SYSTEM

TROUBLE	PROBABLE CAUSE	REMEDY
a. Rudder moves too far.	Improper adjustment of stops at rudder pedals.	Reset stops.
	Cables in rudder stop assembly loosened due to broken safetywire on turnbuckle.	Check rudder stop cable turnbuckles for broken safetywire; restore cables to proper tension.
b. Binding of rudder or rudder pedals.	Misalignment of cables through pulleys.	Realign pulleys.
c. Slippage of cables.	Insufficient tension.	Tension cables.

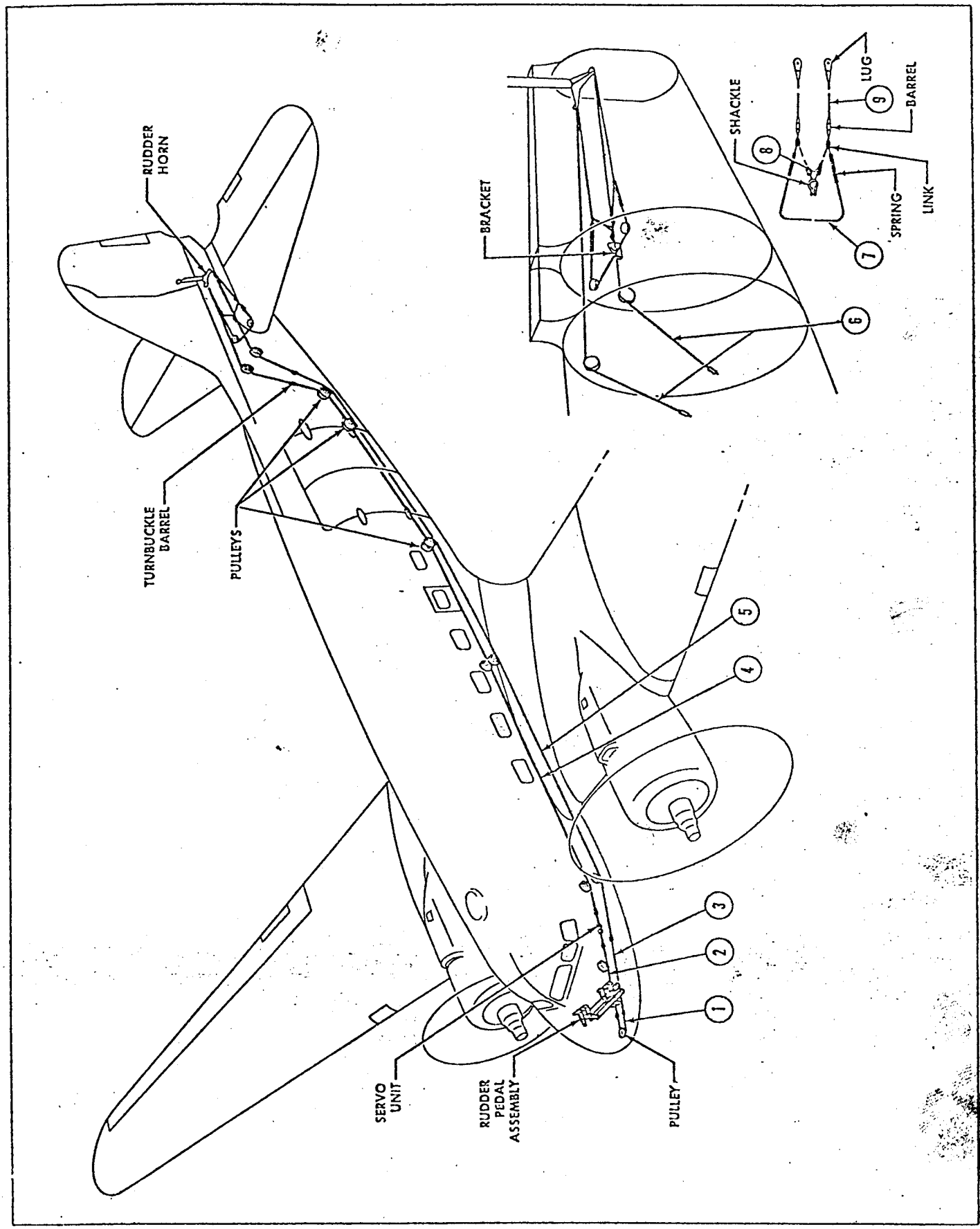

33.121

Figure 11-5. Rudder Controls - Key Drawing (Sheet 1 of 2)

CABLE REF. NO.	DOUGLAS CABLE ASSEMBLY DRAWING NO.	NO. REQD	TYPE	CABLE LENGTH (L_1)	CABLE LENGTH (L_2)	CABLE SIZE	FITTINGS (1)	FITTINGS (2)	FITTINGS (3)	FITTINGS (4)
1	2074410CG	1	A	34 3/8		3/16 dia 7 x 19 flex.	AN669S6LH	AN668-6		
2	2074410CG	1	A	50 3/4		3/16 dia 7 x 19 flex.	AN669S6LH	AN668-6		
3	2074410FG	1	A	57 3/8		3/16 dia 7 x 19 flex.	AN669L6RH	AN668-6		
4	2074410CE	1	B	504 1/8		3/16 dia 7 x 19 flex.	AN669S6LH	AN669L6RH		
5	2074410EE	1	B	530 3/4		3/16 dia 7 x 19 flex.	AN669L6LH	AN669L6LH		
6	2074410FG	2	A	112 1/4		3/16 dia 7 x 19 flex.	AN669L6RH	AN668-6		
7	2074406EE	1	C	52 13/16		1/16 dia 7 x 7 flex.	AN668-2	AN668-2		
8	2074408GH	2	C	7 3/32		1/8 dia 7 x 19 flex.	AN668-4	AN667-4		
9	2074408CS	2	D	38 1/16		1/8 dia 7 x 19 flex.	2049220 -24S-L	1-160ST4	1-162SC4	

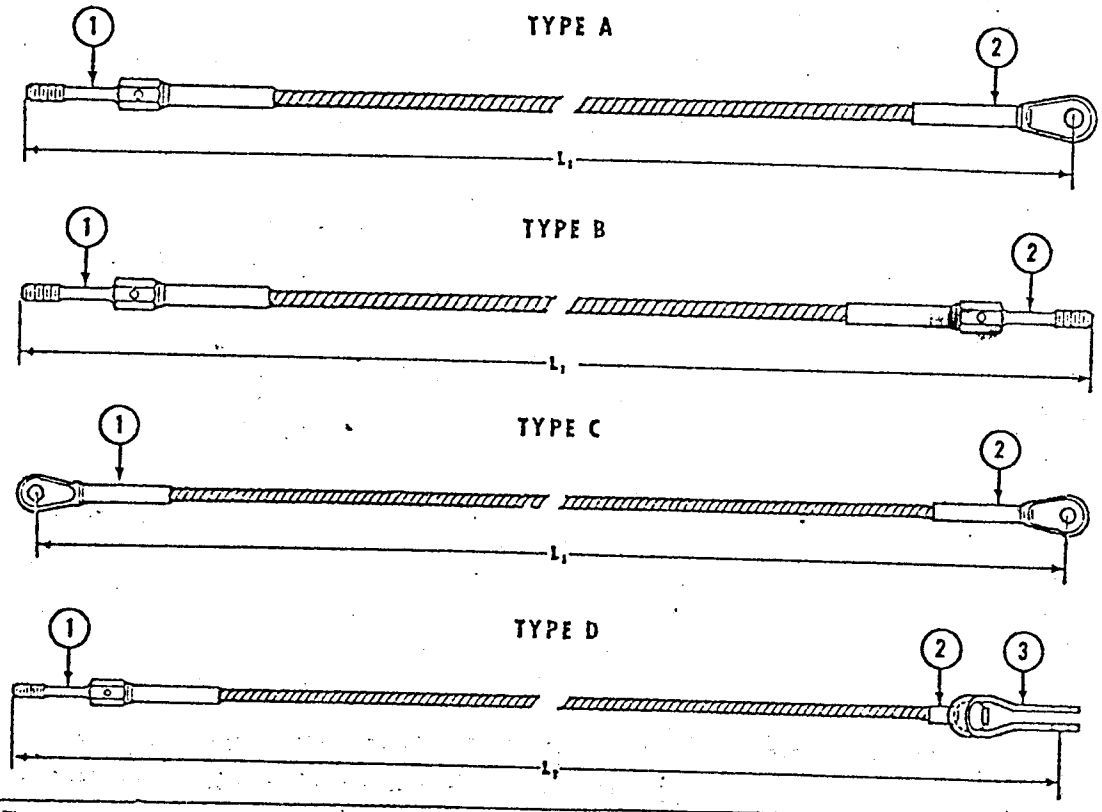

Figure 11-5. Rudder Controls - Cable Chart and Cable Assemblies (Sheet 2 of 2)

33,122

11-24. REMOVAL AND INSTALLATION OF RUDDER CONTROL SYSTEM COMPONENTS.

11-25. RUDDER.

11-26. The rudder is constructed of aluminum alloy and is fabric covered. It is statically and dynamically balanced by means of weights built into the structure. Rudder motion left or right from neutral is 29½ (±1) degrees, or 26½ (±¼) inches.

11-27. REMOVAL OF RUDDER.

Note

Three men are required for this operation.

a. Tape the tab drums on both the control pedestal and the rudder to prevent the cables from unwinding *(see figure 11-7)* or install cable locking clamps *(see figure 11-8)*. Tie the cables forward of the disconnect point to the fuselage structure, and those aft to the rudder assembly.

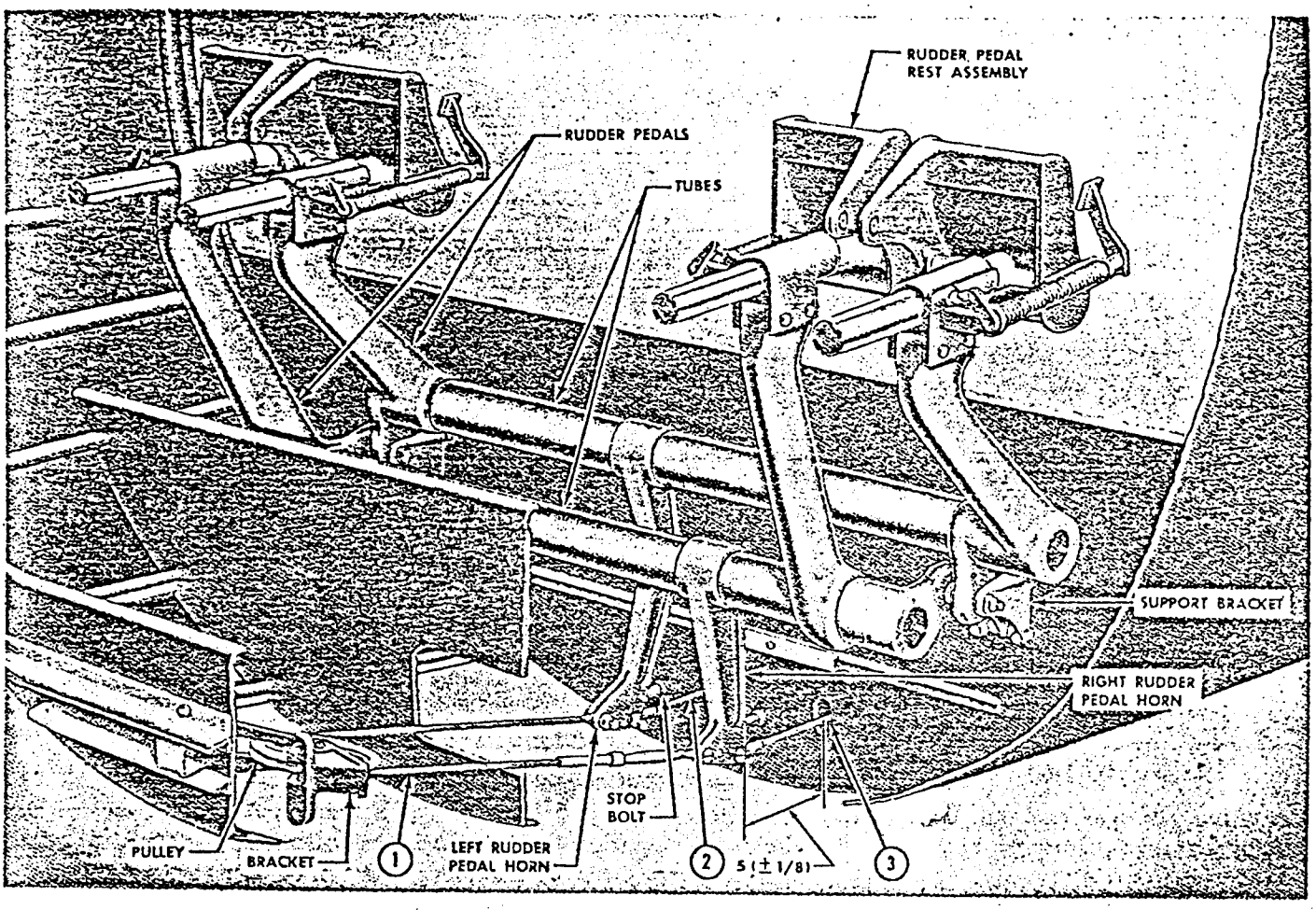

Figure 11-6. Rudder Pedal Mechanism (Sheet 1 of 2)

33.123

b. Disconnect the rudder tab cables at the turnbuckles *(see figure 11-5)* located on the left side of the fuselage above the tail wheel.

c. Remove the guard pin from the pulley attached to the fuselage structure above and at about the center of the horizontal stabilizer.

d. Remove the bolts which attach the rudder to the rudder torque tube.

e. Remove the bonding strips from the rudder.

f. Remove the cotter pins and nuts from the eyebolts at the hinge points.

g. Remove the rudder by tipping it at the top to clear the horn, and then lowering it.

11-28. INSTALLATION OF RUDDER.

Note

Three men are required for this operation.

a. Position the rudder.

b. Align the eyebolts at the hinge points and install the bolts, nuts, and cotter pins.

c. Install the bonding strips.

d. Position the rudder and rudder torque tube and install the bolts.

e. Position the tab cables around the pulley attached to the fuselage above and about the center of the horizontal stabilizer, and install the guard pins.

f. Connect the tab cables at the turnbuckles and safety them.

g. Safety the clevis located on the aft end of the rudder-stop cable to the rudder primary control cable, by passing one end of the safetywire through the opening in the fork of the stop cable clevis end fitting, and then around the cable end fitting on the primary rudder control cable to form a single loop. Accomplish this on both sides of the rudder horn. Use a 0.041-inch diameter soft steel zinc-coated wire.

h. Remove the tape from the drums and tension the cables.

11-29. REMOVAL OF RUDDER PEDAL.

a. Gain access to the rudder pedals by raising the upper hinged fairing on the fuselage nose.

b. Remove the two structural stiffeners located between stations 29½ and 40.

CABLE REF. NO.	DOUGLAS CABLE ASSEMBLY DRAWING NO.	NO. REQD	TYPE	CABLE LENGTH (L_1)	CABLE LENGTH (L_2)	CABLE SIZE	FITTINGS (1)	FITTINGS (2)	FITTINGS (3)	FITTINGS (4)
1	2074410CG	1	A	50 3/4		3/16 dia 7 x 19 flex.	AN66956LH	AN668-6		
2	2074410FG	1	A	57 3/8		3/16 dia 7 x 19 flex.	AN669L6RH	AN668-6		
3	2074410CG	1	A	34 3/8		3/16 dia 7 x 19 flex.	AN66956LH	AN668-6		

TYPE A

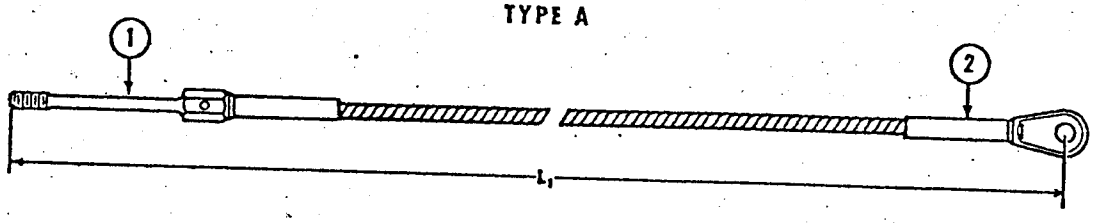

Figure 11-6. Rudder Pedal Mechanism - Cable Chart and Cable Assemblies (Sheet 2 of 2)

33,124

c. Remove the four rods that connect the rudder pedals to the brake torque tubes.

d. Detach the blocks which support the piping located forward of the rudder pedals. This will allow the lines to be raised slightly when the pedal mechanism is removed.

Note

It is not necessary to disconnect any lines to remove or install the rudder pedal mechanism.

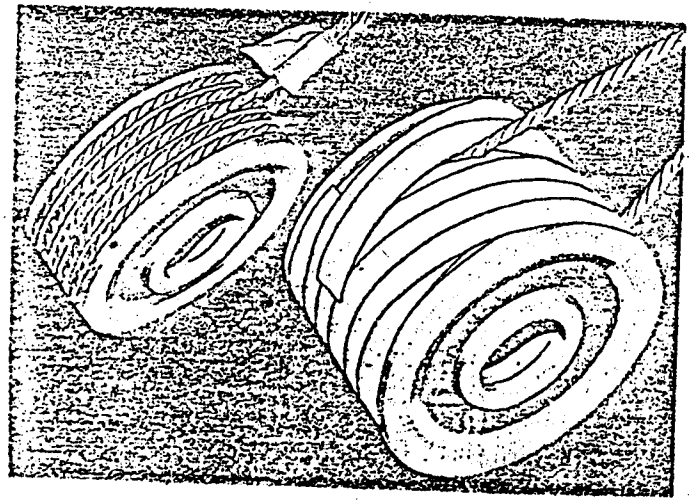

33,125

Figure 11-7. Trim Tab Drum Taping Procedure

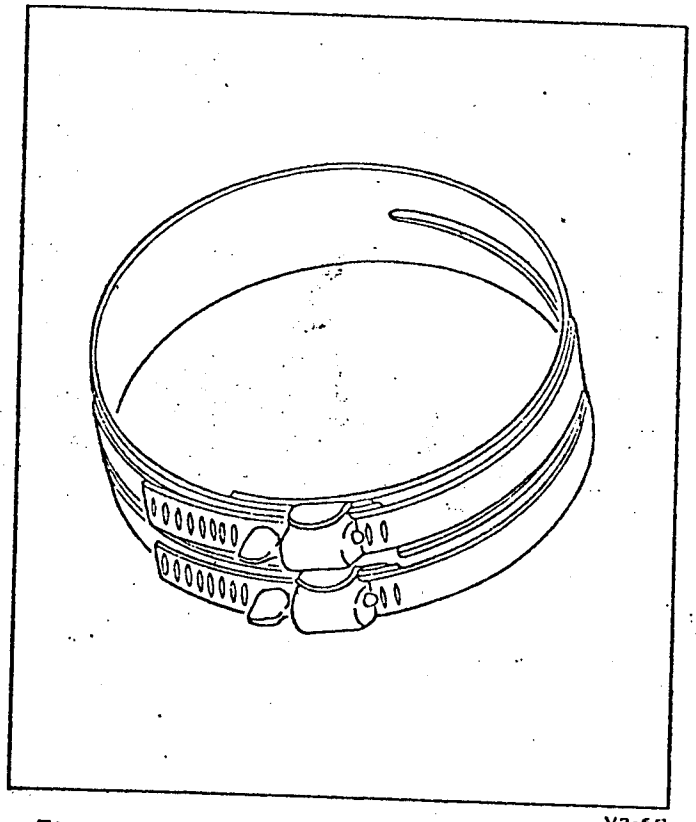

V2-60

Figure 11-8. Trim Tab Drum Cable Locking Clamp

e. Gain access to the horns by removing the door on the underside of the fuselage, and disconnect the rudder bus cables and the rudder control cables from the horns *(see figure 11-6)*.

f. Remove the bolts *(see figure 11-6)* from the two rudder pedal brackets, and remove the bushings. This will free both the left and right pedal assemblies.

g. Remove the pedals from the arms on the left side.

h. Loosen the aft ends of the two braces which extend from the brake valve at station 29½ to station 40. This will allow clearance for the removal of the pedal mechanism.

i. Remove the right pedal assembly by working it out through the right side of the flight compartment.

j. Remove the left pedal assembly in the same manner.

11-30. REWORK OF RUDDER PEDALS. Prior to installation of the rudder pedals, rework as described in the following steps.

a. Examine each of the four pedals for evidence of looseness between the rudder pedal slide tube support and the rudder pedal assembly. If looseness exists, the bolt holes in the slide tube support are elongated.

b. Drill out the elongated holes to 19/64 inch and line ream to 0.3125 inch.

c. Make 0.3127-inch OD bushings from 4130 steel, or 2024-T aluminum alloy. If the bushings are made from steel, cadmium plate to approximately 0.0003-inch thick, or zinc plate to approximately 0.0004-inch thick.

d. Press the bushings into the holes and line ream to 0.1875-inch ID.

e. Apply a coat of zinc chromate primer to the ends of the bushings, and allow a fillet of primer to form around the outer circumference of bushings.

f. At the attachment of the rudder pedal slide tube support to the rudder pedal assembly, install an additional bolt in the existing hole between the two holes now having bolts installed. This bolt installation will be accomplished on each of the four rudder pedal installations.

11-31. INSTALLATION OF RUDDER PEDAL.

a. Work the rudder pedal assemblies down through the right side of the flight compartment and install the bushings and bolts through the rudder pedals and brackets.

b. Connect the pedals to the arms on the right and left sides.

c. Connect the rudder bus cables and the rudder control cables to the horns.

d. Install the aft ends of the two braces at stations 29½ and 40.

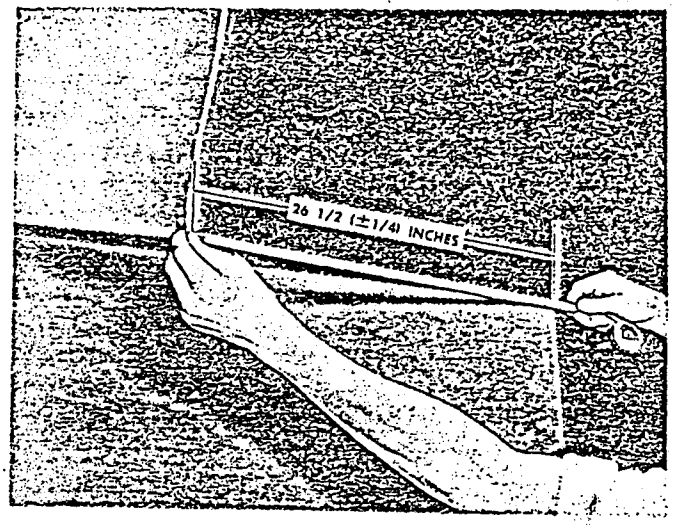

Figure 11-9. Rudder Travel Measurement

e. Position the piping and attach the supporting blocks.

f. Connect the rudder pedals to the brake torque tubes.

g. Install the two structural stiffeners between stations 29½ and 40.

11-32. OPERATIONAL TEST AND ADJUSTMENT OF RUDDER CONTROL SYSTEM.

a. Place the rudder pedals in the full aft adjustment position.

Note

The ends of the splined shafts will be flush with the forward side of the arms.

b. Secure the rudder in the neutral position.

Note

Before making a rudder adjustment, the dimensions shown in figure 11-6 must be met. The rudder pedal must be in neutral and the synchronizing cable connected. *(See figure 3-62.)*

c. Obtain proper cable tension by adjusting the rudder cable turnbuckles.

d. Align the rudder pedals by means of the turnbuckles in the aft section, tightening one turnbuckle and loosening the other.

e. Adjust the front bumper stops *(see figure 11-6)* on the rudder pedal horns to obtain a rudder travel of 27 inches, right and left.

f. Shorten the rudder stop cables *(see figure 11-5)* in in the aft section to obtain a final rudder travel of 26½ (±¼) inches *(see figure 11-9)*.

11-33. RUDDER TRIM TAB SYSTEM.

11-34. **GENERAL DESCRIPTION.** A movable trim tab is installed on the trailing edge of the rudder. Right and left movement of the trim tab is controlled by a crank mounted on the control pedestal. A graduated dial indicator indicates the degree of tab. The tab control cables are wound around a drum on the control crankshaft in the pedestal. The cables are routed over pulleys below the pilot's compartment floor, and aft to the rudder tab operating mechanism drum. The correct travel of the tab, right and left from neutral, is 2¾ (±⅛) inches or 12 (±½) degrees.

11-35. **TROUBLE SHOOTING OF RUDDER TRIM TAB SYSTEM.** Trouble shooting of the rudder trim tab system is accomplished as outlined in table 11-3.

11-36. **REMOVAL AND INSTALLATION OF RUDDER TRIM TAB.**

11-37. REMOVAL OF RUDDER TRIM TAB.

a. Disconnect the actuating tube from the tab by removing the clevis bolt.

b. Remove the center hinge bolt.

c. Peel off the patches which cover the access openings located in the rudder fabric beside the upper and lower hinge points.

d. Remove the bolts from the two end hinges, and remove the tab.

11-38. INSTALLATION OF RUDDER TRIM TAB.

a. Position the tab and install the two bolts through the end hinges.

b. Recover the access holes in the rudder fabric. Refer to the applicable volume for structural repair.

c. Install the center hinge bolt.

d. Connect the actuating tube to the tab with the clevis bolt.

11-39. **OPERATIONAL TEST AND ADJUSTMENT OF RUDDER TRIM TAB SYSTEM.**

a. Adjust cable tension at the turnbuckles *(see figure 11-10)* in accordance with the Cable Rigging Tension Chart *(see figure 11-3)*.

b. Place the tab in the neutral position and set the tab indicator at ZERO.

c. Check the rudder trim tab for full movement and proper direction of travel in relation to cockpit control.

Note

Incorrect movement of the tab may be traced to improper cable lengths. Travel of the cables is limited to the proper distance at the factory by means of stop lugs which are soldered to the cables. The lugs, which are located at the first bulkhead aft of the servo unit, strike against fixed fairleads attached to the fuselage structure.

d. Secure all turnbuckles with safetywire.

11-40. ELEVATOR CONTROL SYSTEM.

11-41. **GENERAL DESCRIPTION.** *(See figures 11-11 and 11-12.)* The two elevators consist of aluminum alloy frames covered with fabric. Each elevator is hinged to the horizontal stabilizer at two points and is counterbalanced by weights built into the elevator structure. An adjustable trim tab of all-metal construction is installed on the trailing edge of each elevator. Upward motion of the elevators is 30 (±½) degrees, or 12 (±⅛) inches. Downward motion of the elevators is 20 (±½) degrees, or 8 (±⅛) inches. The dual control columns are located in the flight compartment and are attached to the bulkhead under the flight compartment flooring. Forward and aft movement of the control column controls the travel of the elevators. Forward travel of the control column is limited by an adjustable stop located on the fuselage structure in the path of the torque tube horn. Aft travel of the column is limited by stop bolts on the upper elbows of the column.

TABLE 11-3
TROUBLE SHOOTING - RUDDER TRIM TAB SYSTEM

TROUBLE	PROBABLE CAUSE	REMEDY
a. Tab moves too far.	Soldered stop lugs located on cable at first bulkhead aft of servo unit are loose.	Remove and replace stop lugs.
b. Tab flutters.	Play in tab drum in rudder.	Tighten adjustment nut on tab drum.

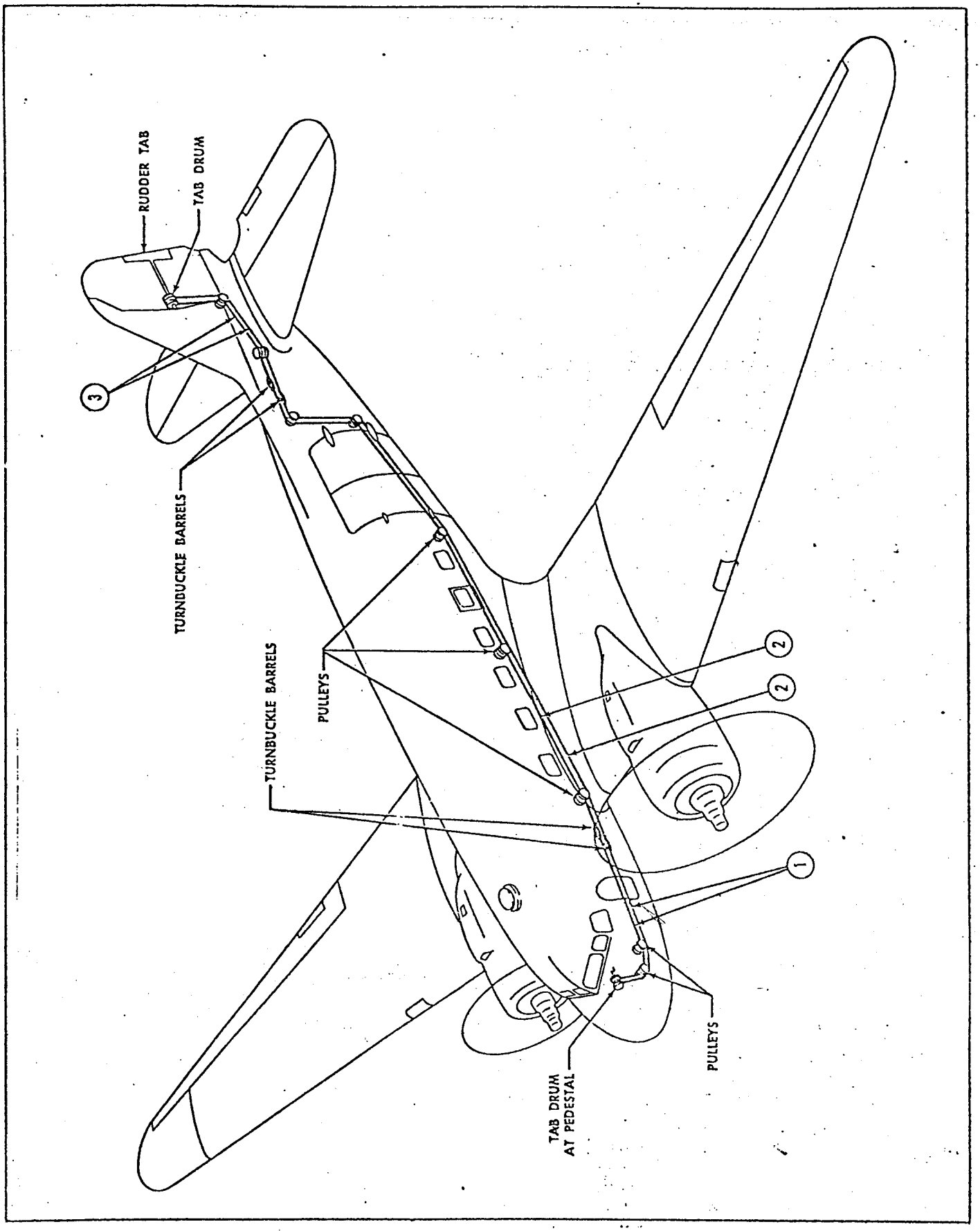

Figure 11-10. Rudder Trim Tab Controls - Key Drawing (Sheet 1 of 2)

33,127

CABLE REF. NO.	DOUGLAS CABLE ASSEMBLY DRAWING NO.	NO. REQD	TYPE	CABLE LENGTH (L_1)	CABLE LENGTH (L_2)	CABLE SIZE	FITTINGS (1)	FITTINGS (2)	FITTINGS (3)	FITTINGS (4)
1	2115350	1	A	379		1/16 dia 7 x 7 flex.	2049220-8DS-2R	2049220-8DS-2R		
2	2074406CD	2	A	488 3/16		1/16 dia 7 x 7 flex.	AN66952LH	AN66952RH		
3	2074406CC	1	A	346 1/2		1/16 dia 7 x 7 flex.	AN66952LH	AN66952LH		

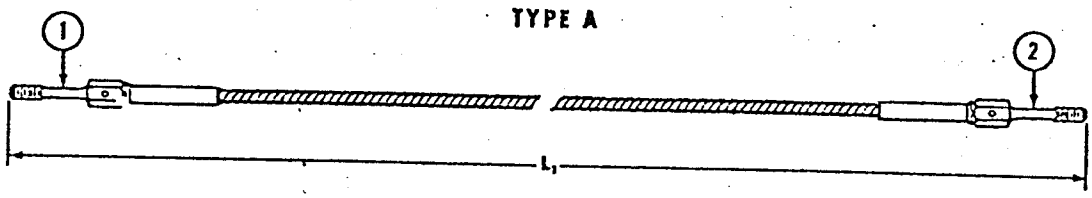

Figure 11-10. Rudder Trim Tab Controls - Cable Chart and Cable Assemblies (Sheet 2 of 2)

33,128

TABLE 11-4

TROUBLE SHOOTING - ELEVATOR CONTROL SYSTEM

TROUBLE	PROBABLE CAUSE	REMEDY
a. Incorrect travel.	Stop in empennage loose and out of adjustment.	Reset stop, tighten lock nut, and install safetywire.
	Stop loose on control column horn.	Reset stop and tighten lock nut. Restore cables to tension recommended in Cable Rigging Tension Chart.
	Broken safetywires on turnbuckle barrels at servo unit or in aft section.	Replace safetywire.
	Elevator torque tube inverted (short horn on top).	Reverse torque tube.
b. Control column hits instrument panel, or stop bracket in flight compartment.	Loose stop or turnbuckles.	Rerig elevator controls.

11-42. TROUBLE SHOOTING OF ELEVATOR CONTROL SYSTEM. Trouble shooting of the elevator control system is accomplished as outlined in table 11-4.

11-43. REMOVAL AND INSTALLATION OF ELEVATOR CONTROLS.

11-44. REMOVAL OF ELEVATOR.

a. Disconnect the elevator trim tab control cables at the turnbuckles located in the aft section of the fuselage.

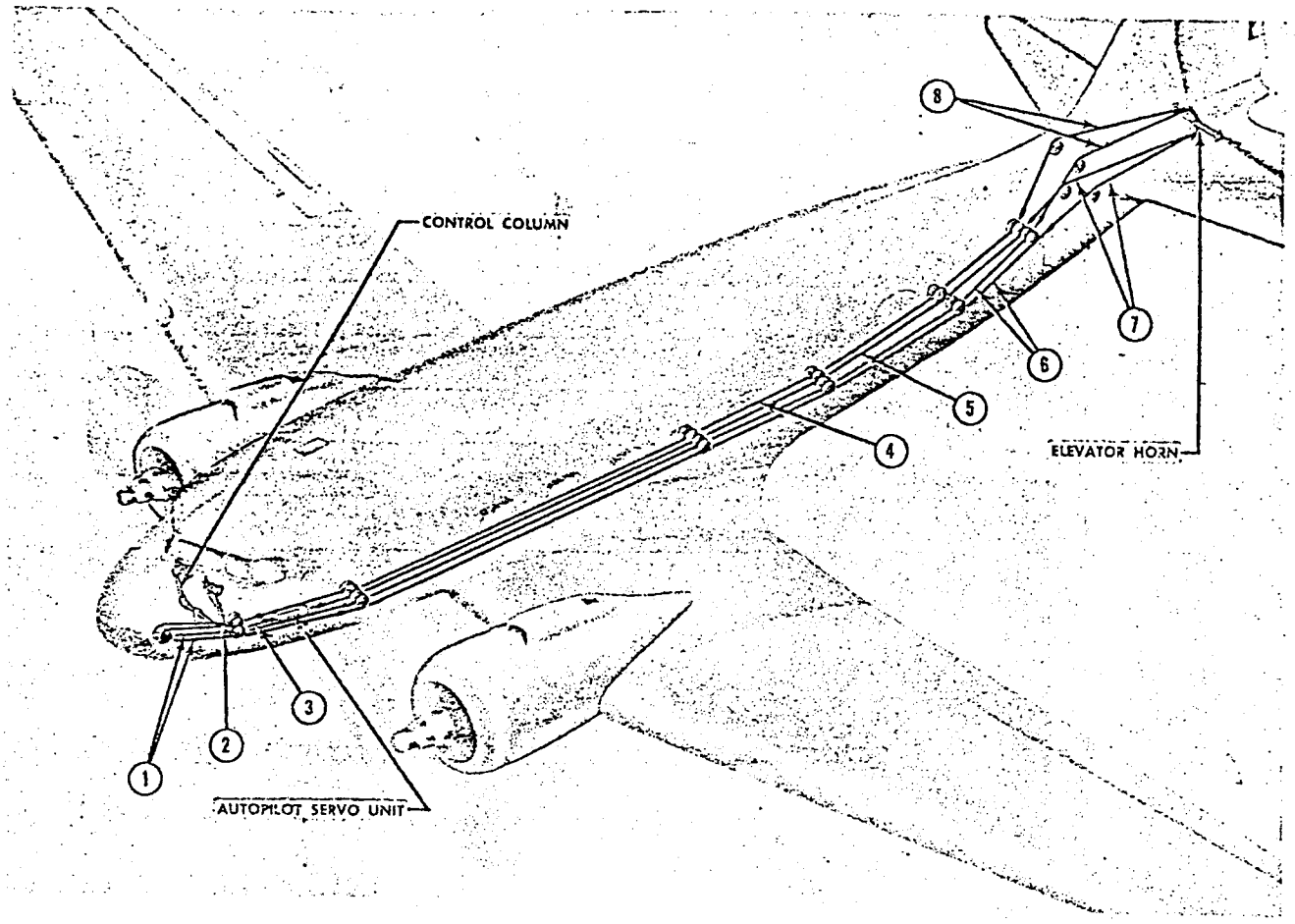

Figure 11-11. Elevator Controls - Key Drawing (Sheet 1 of 2)

33,129

Note

There are four cables at this point, two for each elevator tab.

b. Disconnect the elevator control cables from the elevator horn.

Note

Tape or clamp the tab drums and the control pedestal drum, and fasten the cable ends to prevent the cables from unwinding. *(See figures 11-7 and 11-8).*

c. Detach the elevator pulleys located in the fuselage at the forward end of the horizontal stabilizer.

d. Remove the guard pins from the tab pulleys attached to a bracket on the aft edge of the horizontal stabilizer.

e. Remove the bolts connecting the elevator to the elevator torque tube.

f. Detach the bonding strips at the elevator hinge points.

g. Remove the cotter pins and nuts from the eyebolts at the hinge points (two men are required).

h. Remove the left elevator by pulling it down, and then aft.

i. Remove the right elevator by lifting it up, and then aft.

11-45. INSTALLATION OF ELEVATOR.

Note

Before installing the elevator, check that the elevator torque tube is installed properly, with the short cable-attach horn down.

a. Position the elevators and install the eyebolts, nuts, and cotter pins at the hinge points.

b. Attach the bonding strips at the hinge points.

c. Install the elevators to the elevator torque tube.

d. Install the cables and guard pins in the tab pulleys attached to a bracket on the aft edge of the horizontal stabilizer.

e. Install the pulleys, located in the fuselage at the forward end of the horizontal stabilizer.

f. Connect the elevator cables to the elevator horn.

g. Connect the tab control cables at the turnbuckles.

h. Remove the tape from the drums.

CABLE REF. NO.	DOUGLAS CABLE ASSEMBLY DRAWING NO.	NO. REQD	TYPE	CABLE LENGTH (L_1)	CABLE LENGTH (L_2)	CABLE SIZE	FITTINGS (1)	FITTINGS (2)	FITTINGS (3)	FITTINGS (4)
1	2074410FG	1	A	59 7/8		3/16 dia 7 x 19 flex.	AN669L6RH	AN668-6		
2	2074410FG	1	A	103 7/8		3/16 dia 7 x 19 flex.	AN669L6RH	AN668-6		
3	2074410CG	1	A	29 1/2		3/16 dia 7 x 19 flex.	AN669L6RH	AN668-6		
4	2074410EE	1	B	480 1/8		3/16 dia 7 x 19 flex.	AN669L6LH	AN669L6LH		
5	2074410CE	1	B	479 1/8		3/16 dia 7 x 19 flex.	AN669S6LH	AN669L6LH		
6	2074410EE	1	B	485 1/2		3/16 dia 7 x 19 flex.	AN669L6LH	AN669L6LH		
7	2074410FH	1	A	126 7/8		3/16 dia 7 x 19 flex.	AN669L6RH	AN667-6		
8	2074410FH	1	A	155 1/2		3/16 dia 7 x 19 flex.	AN669L6RH	AN667-6		

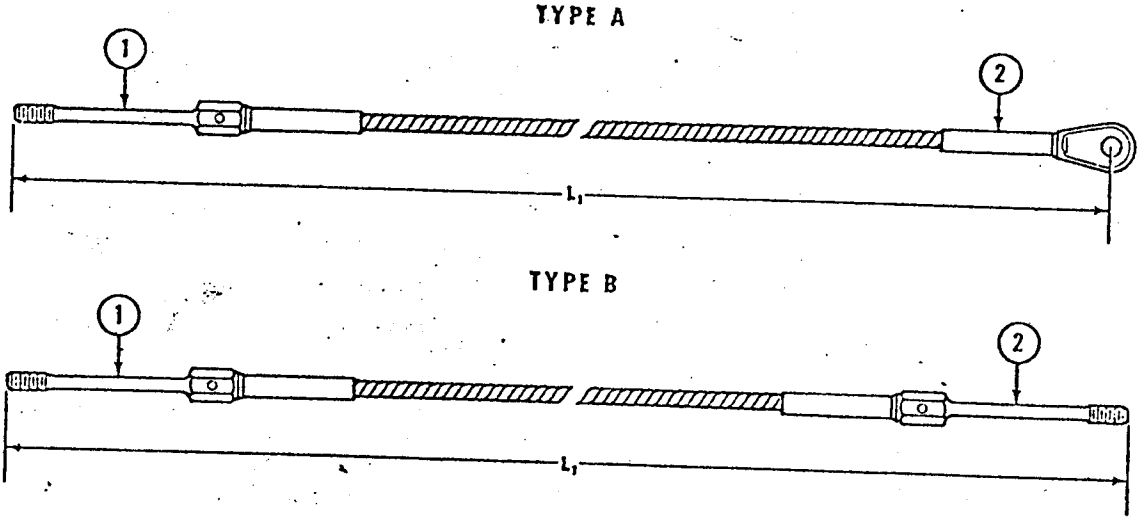

Figure 11-11. Elevator Controls - Cable Chart and Cable Assemblies (Sheet 2 of 2)

33,130

11-46. OPERATIONAL TEST AND ADJUSTMENT OF ELEVATOR CONTROL SYSTEM.

a. Place the elevators in the DOWN position and adjust the cable tension in accordance with the Cable Rigging Tension Chart *(see figure 11-3)*. Add approximately 10 pounds tension (three points on the tensiometer) to each of the lower elevator cables.

b. Adjust the stop on the bulkhead, aft of the control column horn to provide a clearance of from 1 to 1½ inches between the control column and the instrument panel when the column is in the forward position.

c. Adjust the DOWN movement of the elevators to 8 (±⅛) inches, or 20 (±½) degrees, by loosening the upper pair of turnbuckles in the aft section, and tightening the lower pair. Set the rubber cushion stop so that the elevator horn compresses it approximately ¼ inch.

Key to Figure 11-12

Item	*Nomenclature*
1.	Elbow and Cover Plate
2.	Elbow
3.	Tube
4.	Cable Assembly
5.	Horn Assembly
6.	Bumper Stop
7.	Tube

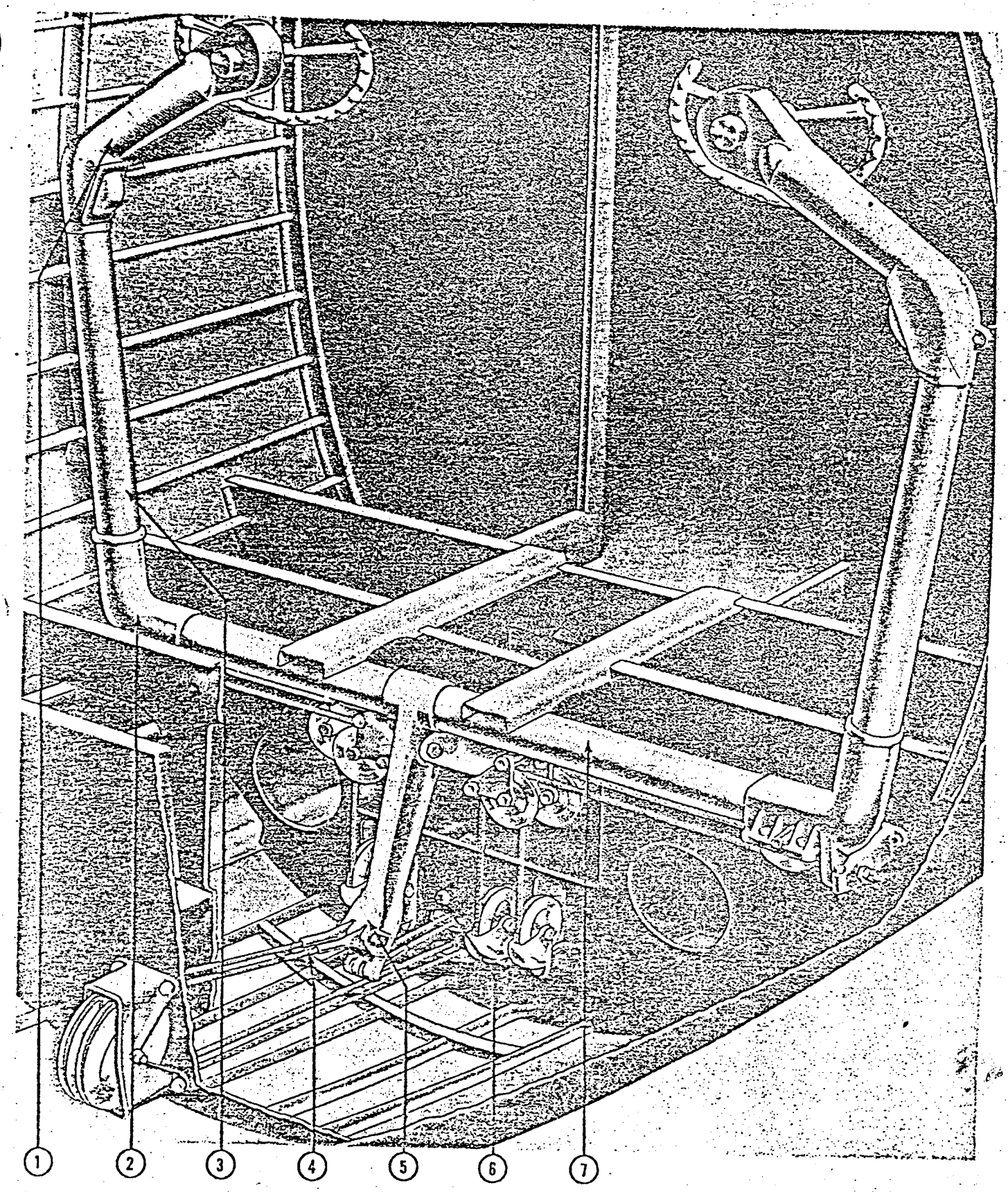

Figure 11-12. Control Column Installed

V2-50

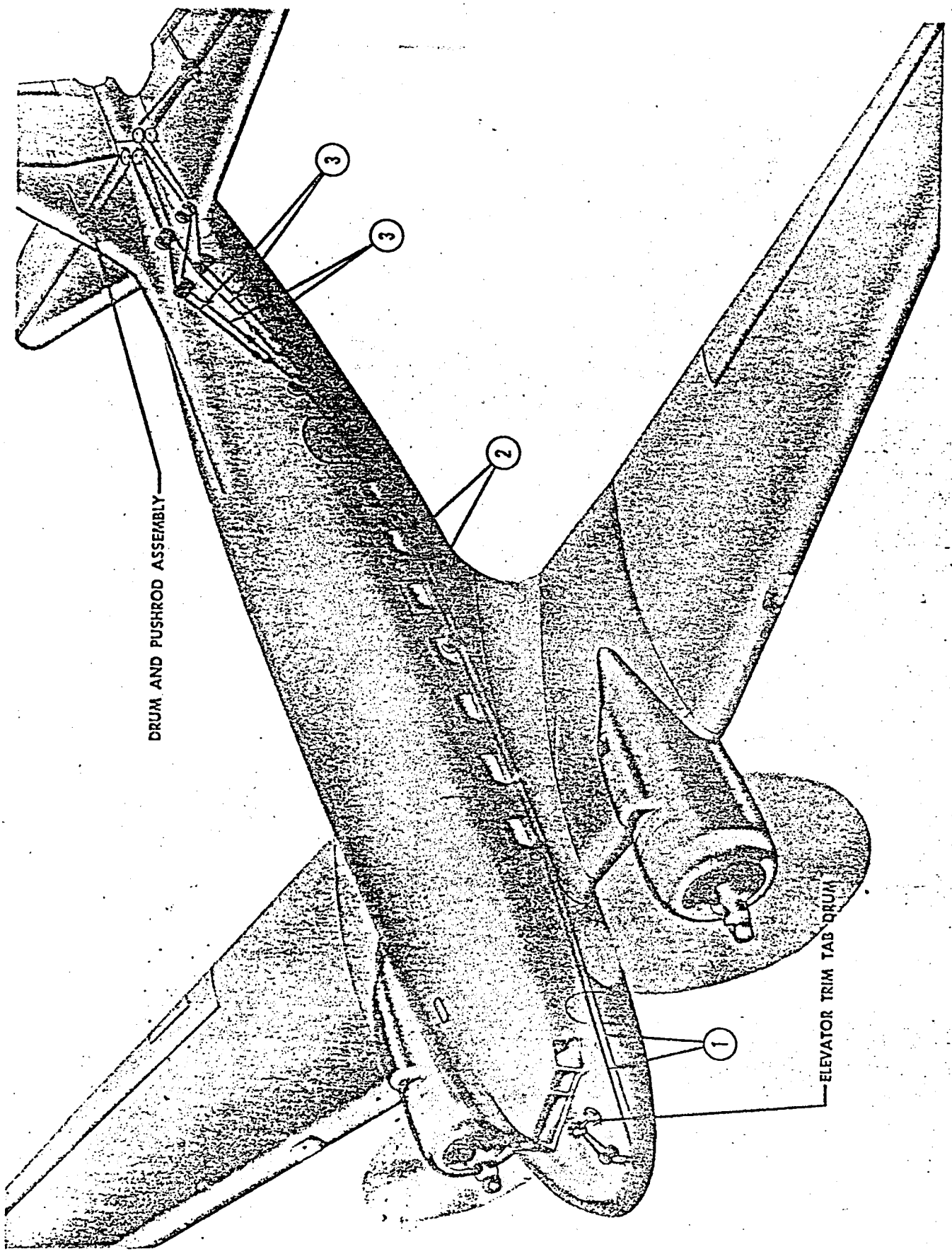

Figure 11-13. Elevator Trim Tab Controls - Key Drawing (Sheet 1 of 2)

33,132

CABLE REF. NO.	DOUGLAS CABLE ASSEMBLY DRAWING NO.	NO. REQD	TYPE	CABLE LENGTH (L_1)	CABLE LENGTH (L_2)	CABLE SIZE	FITTINGS (1)	FITTINGS (2)	FITTINGS (3)	FITTINGS (4)
1	3115353-1	1	A	132		3/32 dia 7 x 7 flex.	2049219-16D-3R	2049219-16D-3R		
2	2074407EH	2	B	479 3/8	112 3/8	3/32 dia 7 x 7 flex.	AN669L3LH	139670-1	AN667-3	
3	2074406CC	2	A	497		1/16 dia 7 x 7 flex.	AN66952LH	AN66952LH		

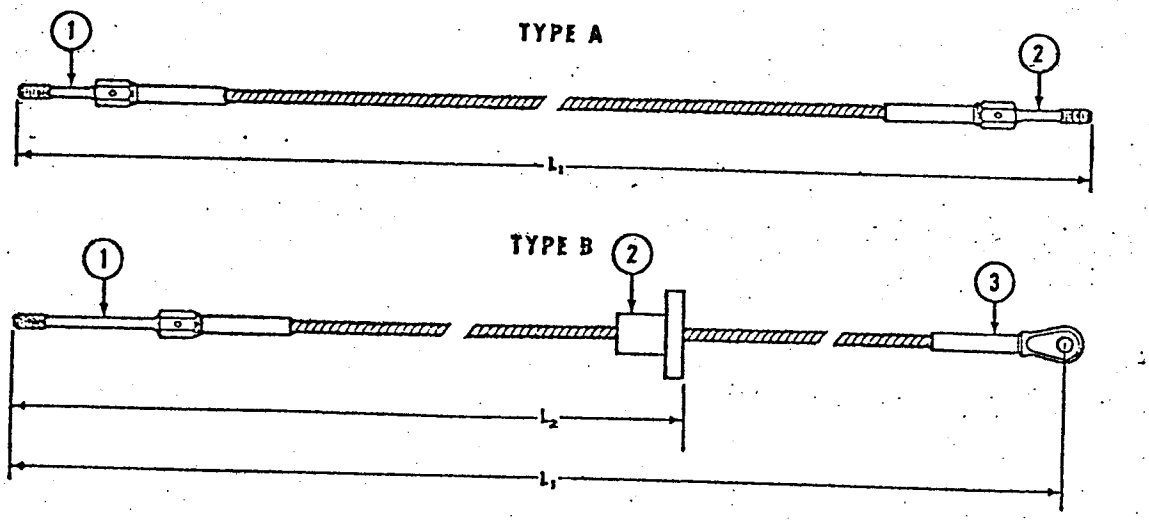

33,133

Figure 11-13. Elevator Trim Tab Controls - Cable Chart and Cable Assemblies (Sheet 2 of 2)

d. Adjust the UP movement of the elevators to 12 (±⅛) inches, or 30 (±½) degrees, by turning the two stop bolts on the control column, and the cushion stop in the aft section. Allow a clearance of ¼ inch between the stop bolts on the control column and the fixed stops located on each side of the fuselage, when the column is in the aft position and the elevator horn in the aft section is compressing the cushion stop about ¼ inch.

e. Secure all turnbuckles with steel safetywire.

11-47. ELEVATOR TRIM TAB SYSTEM.

11-48. GENERAL DESCRIPTION. *(See figure 11-13.)* Elevator trim tab motion is controlled by a wheel *(see figure 11-14)* installed on the control pedestal. Forward rotation of the wheel raises the tab and forces the airplane nose down when the airplane is in flight. Rearward rotation of the wheel lowers the tab and raises the nose of the airplane when it is in flight. A graduated dial located on the control pedestal beside the tab control wheel *(see figure 11-14)*, indicates the effect of the tab movement on the longitudinal attitude of the airplane when it is in flight. The tab control cables are wound around a drum on the control wheel shaft within the pedestal and extend downward to pulleys located below the flight compartment floor. The cables continue aft to the empennage, where they diverge into each elevator and wind around the drums of the tab-operating mechanisms.

11-49. TROUBLE SHOOTING OF ELEVATOR TRIM TAB SYSTEM. Trouble shooting of the elevator trim tab system is accomplished as outlined in table 11-5.

TABLE 11-5.
TROUBLE SHOOTING - ELEVATOR TRIM TAB SYSTEM

TROUBLE	PROBABLE CAUSE	REMEDY
a. Tabs move too far.	Soldered stop lugs located on cables in fuselage below lavatory bulkhead have come off.	Replace stop lugs and solder after readjusting tab travel.

TABLE 11-5 (Continued)

TROUBLE	PROBABLE CAUSE	REMEDY
a. (Continued)	Elevator tab cables are too loose.	Tighten drum adjustment nut.
b. Tab flutters.	Play in tab drum in elevator.	Tighten drum adjustment nut.

11-50. REMOVAL AND INSTALLATION OF ELEVATOR TRIM TAB SYSTEM.

11-51. REMOVAL OF ELEVATOR TRIM TAB.

a. Disconnect the tab actuating tube from the elevator by removing the bolt.

b. Remove the bolt from the tab center hinge.

c. Peel off the patches covering the small access openings located in the elevator fabric beside the inner and outer hinge points; or plexiglass access inspection panel.

d. Remove the bolts from the two end hinges.

e. Remove the elevator tab.

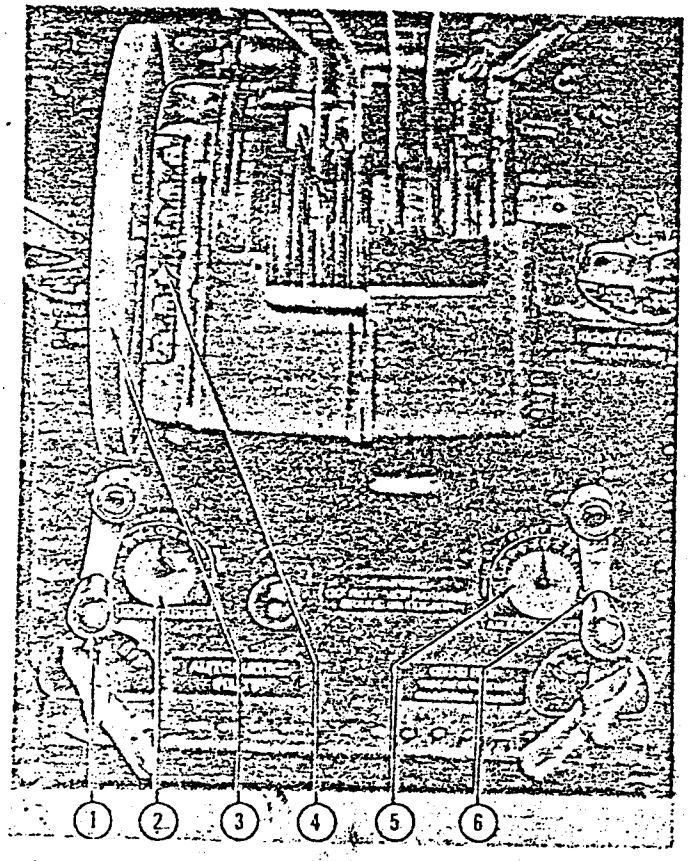

33.134

Figure 11-14. Trim Tab Controls on Pedestal

Key to Figure 11-14

Item	*Nomenclature*
1.	Rudder Tab Control Crank
2.	Rudder Tab Indicator Plate
3.	Elevator Tab Control Hand Wheel
4.	Elevator Tab Control Indicator Plate
5.	Aileron Tab Control Indicator Plate
6.	Aileron Tab Control Crank

WARNING

If Trim Tab Drum in Pedestal and Tab Drum in Wing are removed, insure that each cable is held in place on drum with tape until reinstalled on aircraft. Cables not wound on drums properly will cause Trim Tab to work in reverse. Take care to ensure that the adjustment of the Aileron Trim Tab Control Screw is not inadvertently changed.

11-52. INSTALLATION OF ELEVATOR TRIM TAB.

a. Position the tab and install the bolts in the two end hinge points. Shim with washers as necessary, to prevent strain in the elevator ribs.

b. Re-cover the access holes in the elevator fabric.

c. Install the bolt in the tab center hinge.

d. Connect the tab actuating tube to the elevator with the bolt.

11-53. OPERATIONAL TEST AND ADJUSTMENT OF ELEVATOR TRIM TAB SYSTEM.

a. Adjust cable tension at the turnbuckles in accordance with the Cable Rigging Tension Chart *(see figure 11-3)*.

Note

With the elevator trim tab cables properly installed, the left side cable, between the control pedestal in the cockpit and the link in the rear fuselage section, will move forward and the right side cable will move aft when the elevator tab control is moved to the nose-up position. This will not preclude the possibility of crossed cables, but will serve as a guide during installation and rigging of the cables.

b. Tighten the forward turnbuckles until all threads are covered, then add 12 turns.

c. Place the tabs in the neutral position, and set the indicator to ZERO.

d. Check the tabs for proper movement *(see figure 11-15)*. Correct movement, UP or DOWN, is 1⅝ (±⅛) inches, or 12 (±½) degrees.

Note

If tab movement is incorrect, the difficulty may be traced to improper cable length. Travel of the cables is limited to the proper distance by stop lugs soldered to the cables in the fuselage below the lavatory bulkhead. The lugs strike fixed fairleads on the fuselage structure.

e. Secure all turnbuckles with steel safetywire.

11-54. AILERON CONTROL SYSTEM.

11-55. GENERAL DESCRIPTION. *(See figure 11-16.)* Aileron movement is controlled by means of dual-control wheels mounted on the dual-control column *(see figure 11-17)*. Wheel motion is transmitted to the aileron cables by means of a sprocket and chain *(see figure 11-17)* attached to the shaft of each wheel. The aileron cables are attached to the chains in the upper elbows of the column. From this point, the cables are guided on pulleys to the base of the column and aft through the fuselage to the center wing. The cables from each wheel are joined by means of links in the center wing and directed to the aileron master differential horn. From the horn, the cables extend outboard through each wing and connect to the aileron actuating cranks. The cranks are linked to the ailerons by means of push-pull tube assemblies. Movement of the control wheels and the ailerons is limited by stops *(see figure 11-17)* provided on the chains in the control column elbows. One of the aileron control cables is linked with the autopilot servo unit *(see figure 11-17)* located beneath the companionway floor.

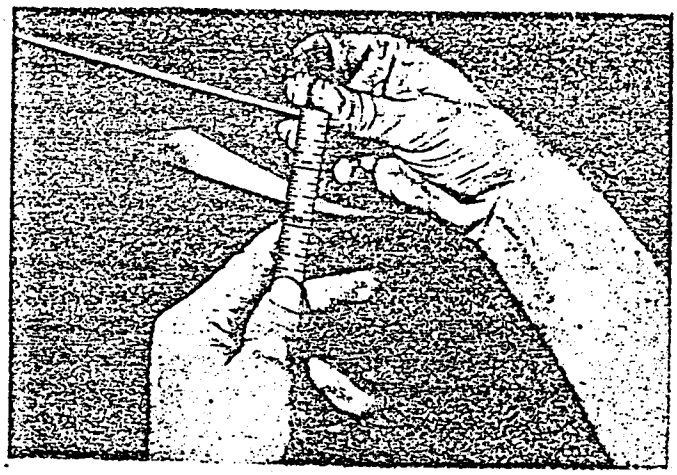

33,135

Figure 11-15. Elevator Trim Tab Travel Measurement

11-56. AILERONS.
(See figures 11-18 and 11-19.)

11-57. The two ailerons consist of aluminum alloy frames which are covered with fabric. Each aileron is hinged to the wing at six points, and is counterbalanced by weights built into the aileron structure. An adjustable metal trim tab is installed on the right aileron. A fixed trim tab, consisting of a metal strip, projects from the trailing edge of the left aileron. Up motion of the aileron is 27 (±½) degrees, or 13 (±⅛) inches. Down motion is 18 (±2) degrees, or 8 (±½) inches. Aileron droop when the airplane is on the ground is 1½ (±½) degrees, or ⅞ (±⅛) inch. The ailerons are controlled by the aileron control wheel mechanism, which is mounted on the control column in the flight compartment. The control mechanism consists of a wheel, a bronze sprocket and shaft, a roller chain with two stops attached, and two control cables.

11-58. TROUBLE SHOOTING OF AILERON CONTROL SYSTEM. Trouble shooting of the aileron control system is accomplished as outlined in table 11-6.

TABLE 11-6
TROUBLE SHOOTING - AILERON CONTROL SYSTEM

TROUBLE	PROBABLE CAUSE	REMEDY
a. Improper travel.	Cables stretched.	Restore cables to proper tension.
	Master differential horn off neutral.	Restore cables to proper tension.
b. Incorrect aileron droop.	Misadjustment of inboard bellcrank actuating rod in outer wing panel.	Shorten or lengthen inboard actuating rod.
c. Servo unit bottoms.	Servo unit not centered when aileron controls are in neutral.	Restore servo unit to correct neutral position by shortening or lengthening cables at servo unit.
d. Chains bind in control wheels.	Aileron cables rigged too tightly.	Loosen cables slightly at turnbuckles located beneath companionway floor.
e. Aileron twists.	Outboard bellcrank actuating rod out of adjustment.	Readjust outboard bellcrank actuating rod.

11-59. REMOVAL AND INSTALLATION OF AILERON CONTROL SYSTEM COMPONENTS. Removal and installation of the aileron control system components are accomplished as outlined in the following paragraphs.

11-60. REMOVAL OF AILERON.

a. Remove the screws from the hinged aileron gap covers.

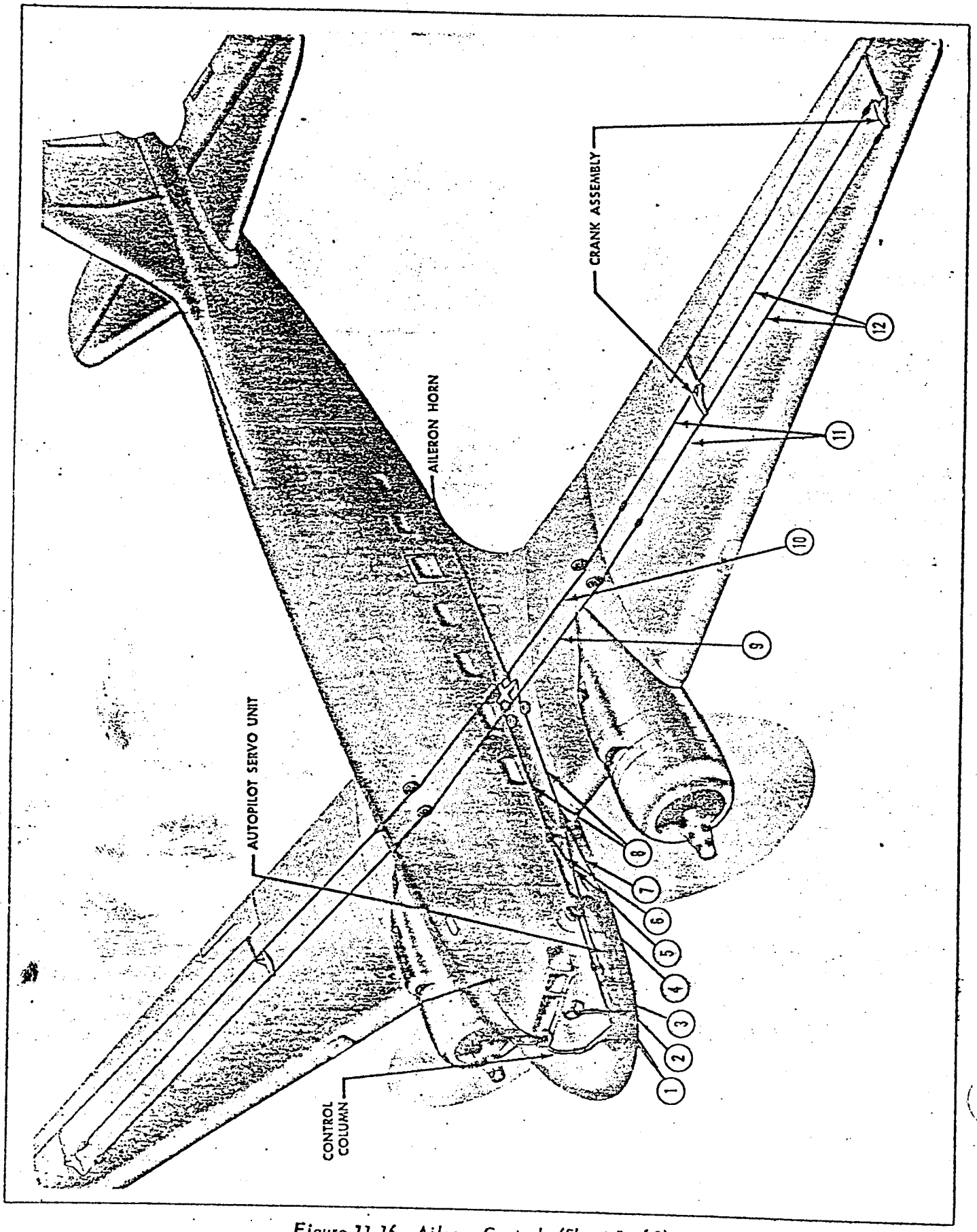

Figure 11-16. Aileron Controls (Sheet 1 of 2)

33,136

CABLE REF. NO.	DOUGLAS CABLE ASSEMBLY DRAWING NO.	NO. REQD	TYPE	CABLE LENGTH (L_1)	CABLE LENGTH (L_2)	CABLE SIZE	FITTINGS (1)	FITTINGS (2)	FITTINGS (3)	FITTINGS (4)
1	2074410FO	2	A	94 7/8		3/16 dia 7 x 19 flex.	AN669L6RH			
2	2074410FO	1	A	122 7/8		3/16 dia 7 x 19 flex.	AN669L6RH			
3	2074410CO	1	A	92 3/8		3/16 dia 7 x 19 flex.	AN669S6LH			
4	2074410EG	1	B	112 3/4		3/16 dia 7 x 19 flex.	AN669L6LH	AN668-6		
5	2074410EG	1	B	87 5/8		3/16 dia 7 x 19 flex.	AN669L6LH	AN668-6		
6	2074410CG	1	B	89 1/2		3/16 dia 7 x 19 flex.	AN669S6LH	AN668-6		
7	2074410EG	1	B	117 1/8		3/16 dia 7 x 19 flex.	AN669L6LH	AN668-6		
8	2074410GG	2	C	86 3/16		3/16 dia 7 x 19 flex.	AN668-6	AN668-6		
9	2074410FH	2	B	167 5/8		3/16 dia 7 x 19 flex.	AN669L6RH	AN667-6		
10	2074410FH	2	B	166 5/8		3/16 dia 7 x 19 flex.	AN669L6RH	AN667-6		
11	2074410EG	4	B	89 5/8		3/16 dia 7 x 19 flex.	AN669L6LH	AN668-6		
12	2074410EG	4	B	156 5/8		3/16 dia 7 x 19 flex.	AN669L6LH	AN668-6		

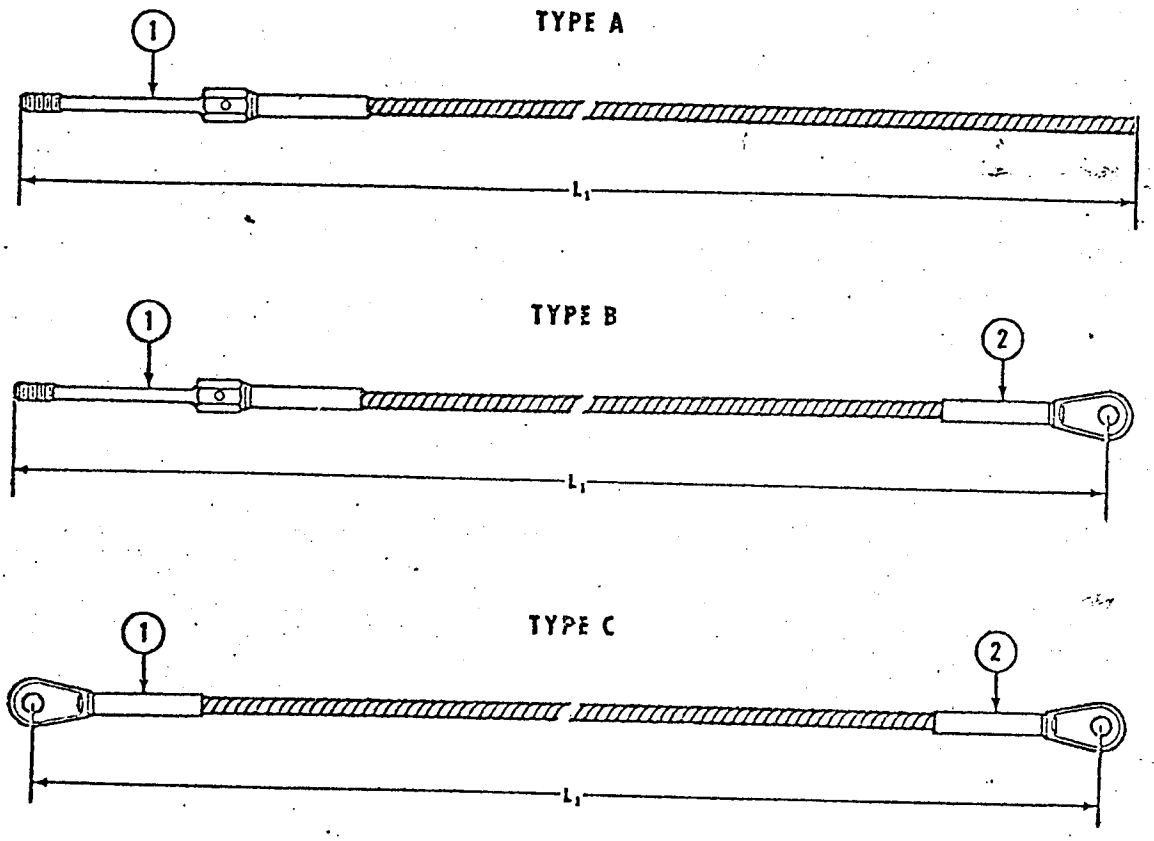

Figure 11-16. Aileron Controls - Cable Chart and Cable Assemblies (Sheet 2 of 2)

33,137

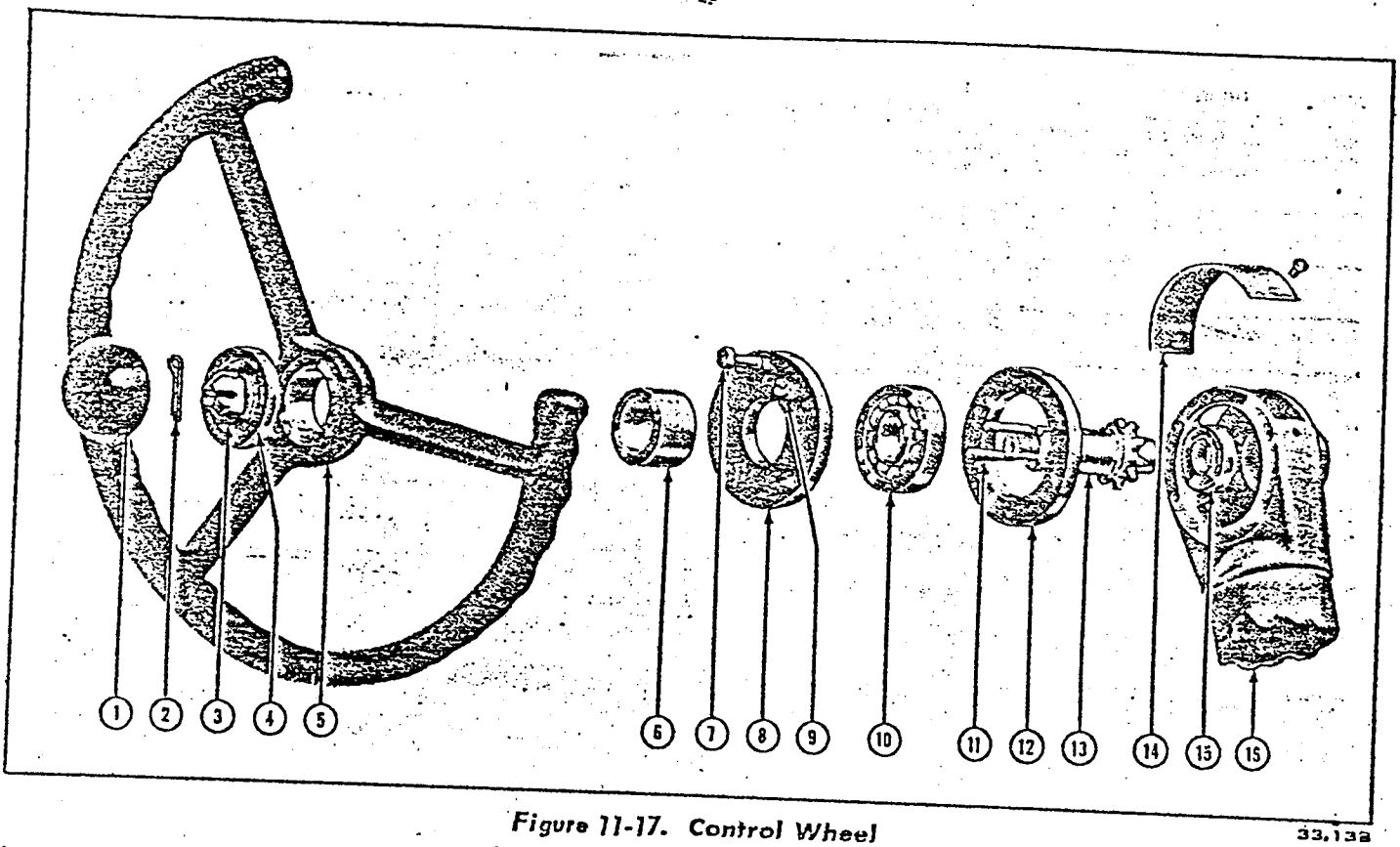

Figure 11-17. Control Wheel

33.132

Key to Figure 11-17

Item	Nomenclature	Item	Nomenclature
1.	Cap, Screw and Washers	9.	Zerk Fitting
2.	Cotter	10.	Ball Bearing
3.	Nut	11.	Key
4.	Washer	12.	Housing
5.	Wheel	13.	Sprocket
6.	Sleeve	14.	Plate, Screw and Lock Washer
7.	Bolt, Washer and Wire	15.	Ball Bearing
8.	Cap – Control Column Head Bearing	16.	Head Assembly

b. Disconnect the aileron trim tab operating arm (right aileron only).

CAUTION

Take care to insure that the adjustment of the aileron tab control screw is not inadvertently changed.

c. Detach the two aileron control rods by removing the bolts from each control rod clevis.

d. Detach the bonding strips on the inboard and outboard hinges.

e. Remove the cotter pins and nuts from the eyebolts at the six aileron hinge points. Start at the center of the aileron and work toward the ends. (Two men are required.)

f. Remove the aileron by pulling it aft.

11-61. INSTALLATION OF AILERON.

a. Position the aileron and install the eyebolts, nuts, and cotter pins at the six hinge points.

b. Attach the bonding strips on the inboard and outboard hinges.

c. Attach the two aileron control rods, with bolts, to each control rod clevis.

d. Connect the aileron trim tab operating arm (right aileron only).

e. Replace the screws in the aileron hinge gap covers.

11-62. OPERATIONAL TEST AND ADJUSTMENT OF AILERON CONTROL SYSTEM.

a. Open the aileron master differential horn access cover from the bottom side of the center wing section.

b. Open the aileron control cable and bellcrank covers on the underside of the outer wing panels.

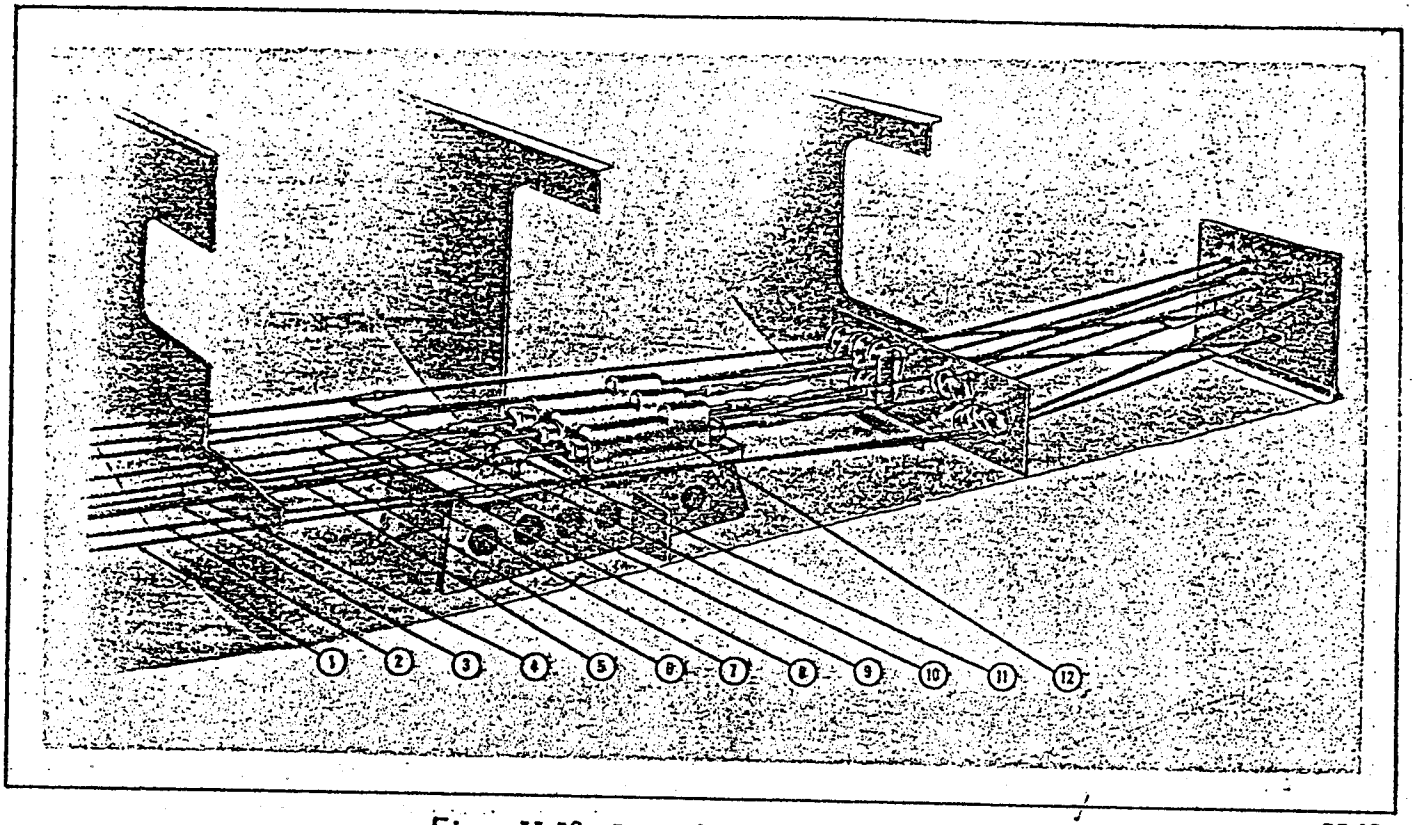

Figure 11-18. Control Cables at Servo Unit

33,139

Key to Figure 11-18

Item	Nomenclature	Item	Nomenclature
1.	LH Rudder Cable	7.	LH Upper Elevator Cable
2.	LH Outer Aileron Cable	8.	RH Upper Elevator Cable
3.	RH Inner Aileron Cable	9.	LH Inner Aileron Cable
4.	LH Lower Elevator Cable	10.	RH Outer Aileron Cable
5.	RH Lower Elevator Cable	11.	Link and Clevis
6.	RH Rudder Cable	12.	Servo Unit (simplified view)

c. Secure the aileron master differential horn in the neutral position, that is, with the horn arm lying in a forward and aft position. Accomplish this by inserting two blocks of wood *(see figure 11-20)* between the aft end of the horn arm and the corners of the lower web.

d. Check the control wheels in the flight compartment for neutral position. The center spokes must be vertical. If the wheels are not synchronized with the master differential horn, compensate by adjusting the turnbuckles *(see figure 11-18)* located beneath the companionway floor. Cable tension can be maintained during adjustment by tightening the one turnbuckle the same number of turns the other is loosened.

e. Check all cables extending between the differential crank and the control wheels for proper tension. Use a tensiometer and thermometer in accordance with the Cable Rigging Tension Chart *(see figure 11-3)*.

f. Check security of the blocks being used to hold the master differential horn in the neutral position.

g. Exert normal pressure upon the control wheel in both directions. If tension is not immediately felt, the cables are too loose and retensioning will be necessary.

CAUTION

Adjust the aileron turnbuckles so that the aileron servo unit *(see figure 11-18)* is in the neutral position when the ailerons are in neutral. The shaft will project an equal distance from each end of the servo unit.

h. Remove the blocks from the master differential horn.

i. Turn the control wheel the full distance in both directions. The control wheel should rotate freely without noticeable binding or grinding of the chains on the sprocket wheels inside the control columns. If binding or grinding occurs, the cables are rigged too tight and a slight loosening of all five turnbuckles beneath the

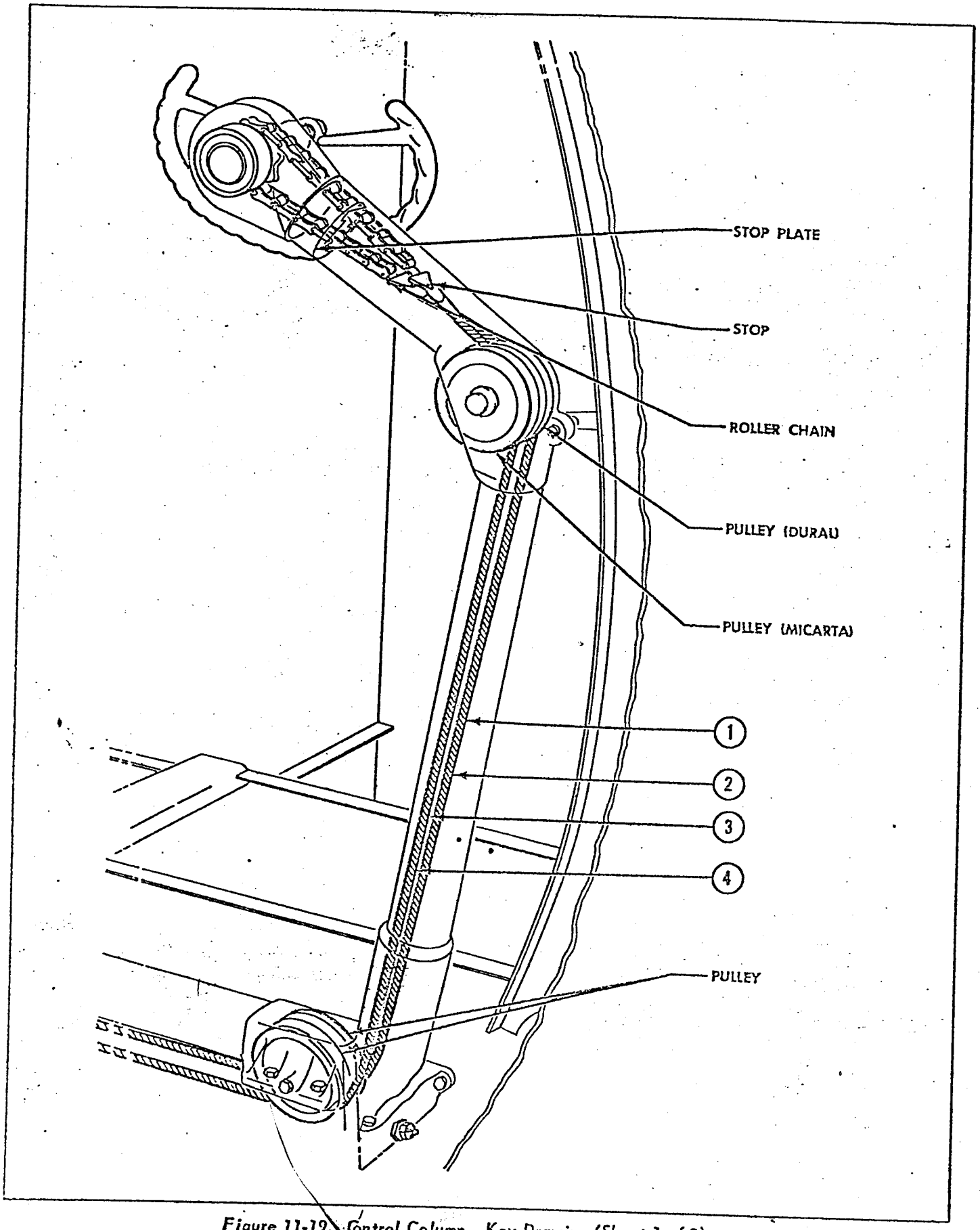

Figure 11-19. Control Column - Key Drawing (Sheet 1 of 2)

33,140

CABLE REF. NO.	DOUGLAS CABLE ASSEMBLY DRAWING NO.	NO. REQD	TYPE	CABLE LENGTH (L_1)	CABLE LENGTH (L_2)	CABLE SIZE	FITTINGS (1)	FITTINGS (2)	FITTINGS (3)	FITTINGS (4)
1	2074410FO left column	1	A	122 7/8		3/16 dia 7 x 19 flex.	AN669L6RH			
2	2074410FO right column	1	A	94 7/8		3/16 dia 7 x 19 flex.	AN669L6RH			
3	2074410CO left column	1	A	92 3/8		3/16 dia. 7 x 19 flex.	AN669S6LH			
4	2074410FO right column	1	A	94 7/8		3/16 dia 7 x 19 flex.	AN669L6RH			

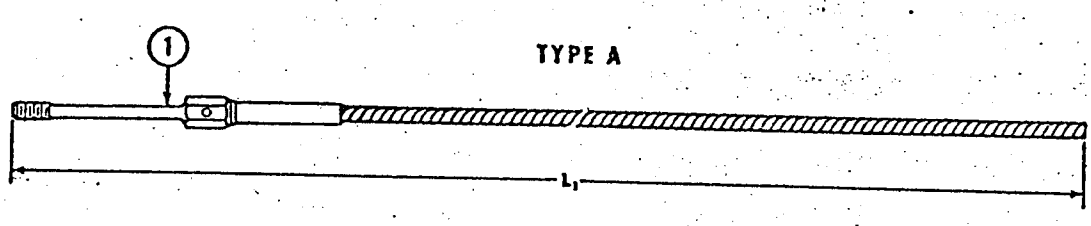

33.141

Figure 11-19. Control Column - Cable Chart and Cable Assemblies (Sheet 2 of 2)

companionway floor will be necessary. The servo unit should not bottom on either end when the wheel is rotated in both directions.

j. Replace the blocks to hold the master differential horn in the neutral position.

k. Remove the outboard bellcrank actuating rod *(see figure 11-21)* by detaching the clevis bolt attaching the rod to the bellcrank, thus loosening the jamnut on the aft end of the rod. Unscrew the rod from the eyebolt.

l. Disconnect the inboard bellcrank actuating rod from the bellcrank. It will not be necessary to disconnect the aft end of this rod.

CAUTION

To prevent possible damage to the fabric in the leading edge of the aileron, support the aileron so that the trailing edge will not drop down when the actuating rods are disconnected.

m. Check the tension of the cables extending from the master differential horn to the inboard bellcrank and, if necessary, make an adjustment in accordance with the Cable Rigging Tension Chart *(see figure 11-3)*. Maintain the forward and aft arm of the bellcrank in a position parallel with that of the master differential horn.

Note

The wing rib may be used as a reference point to parallel the bellcrank with the master differential horn.

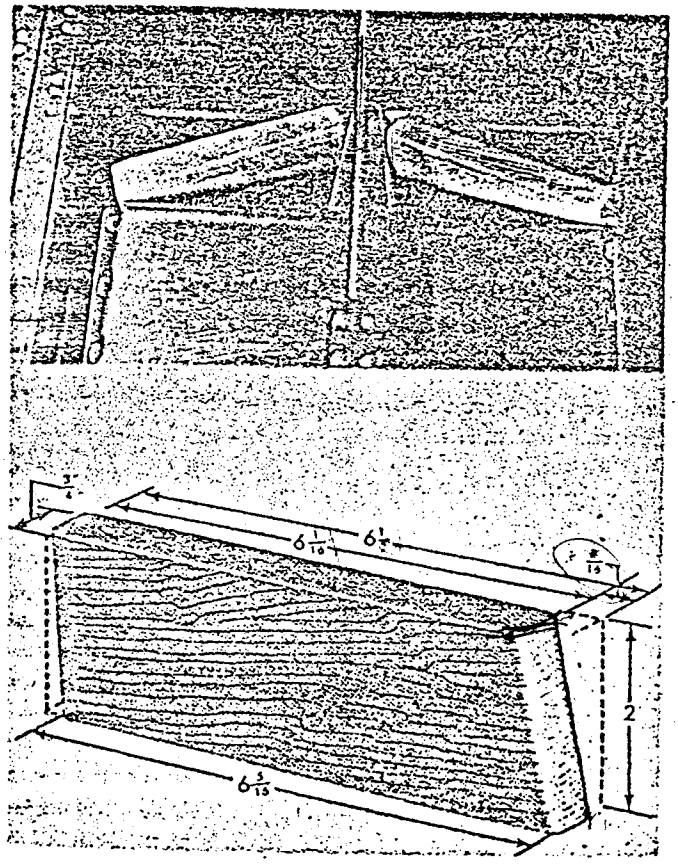

33.142

Figure 11-20. Use of Wood Blocks to Secure Aileron Master Differential Horn in Neutral

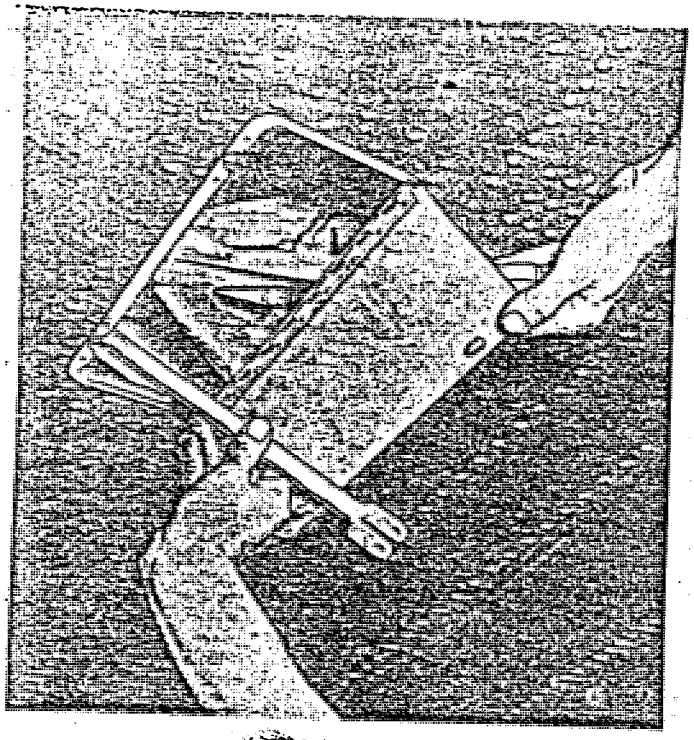

Figure 11-2[illegible] Aileron Outboard Bellcrank Actuating Rod 33.143

n. Connect the inboard actuating rod.

o. Check the aileron for the neutral or droop position. This must be 7/8 (±1/8) inch below the trailing edge of the wing, measured at the inboard tip of the aileron. If adjustment is necessary, lengthen or shorten the inboard bellcrank actuating rod. One complete turn of the rod raises or lowers the aileron 1/4 inch.

p. Remove the blocks from the master differential horn and the support from the aileron; check the aileron travel by revolving one of the control wheels.

q. If the aileron travel is too short, loosen the aft cable and tighten the forward cable. If the travel exceeds requirements, loosen the forward cable and tighten the aft cable.

r. Check the tension of the aileron cables between the inboard and outboard bellcranks and, if necessary, make an adjustment at the turnbuckles.

s. Replace the outboard actuating rod. Adjust the cable lengths and the rod length so that the clevis bolt rides free, without binding, when the aileron is placed in the UP, DOWN, and NEUTRAL positions.

11-63. AILERON TRIM TAB.

11-64. GENERAL DESCRIPTION. The right aileron is equipped with a movable trim tab *(see figure 11-1)* which is operated by a crank *(see figure 11-14)* located on the control pedestal. Clockwise rotation of the control crank lowers the tab, forcing the aileron up and the wing down when the airplane is in flight. Counterclockwise rotation of the control crank raises the tab, forcing the aileron down and the wing up. A graduated dial *(see figure 11-14)*, which indicates the effect of the tab movement on the lateral attitude of the airplane when in flight, is located beside the control crank. The tab control cables *(see figure 11-22)* are wound around a drum on the control crankshaft within the pedestal and pass over a set of pulleys located below the flight compartment floor. From this point, the cables continue aft to the center wing section and outboard to the drum of the tab operating mechanism in the outer wing. The tab stops, consisting of cable lugs striking fixed fairleads, are located in the outer wing panel. The tab stops are not adjustable.

11-65. TROUBLE SHOOTING OF AILERON TRIM TAB. Trouble shooting of the aileron trim tab is accomplished as outlined in table 11-7.

11-66. REMOVAL AND INSTALLATION OF AILERON TRIM TAB. Removal and installation of the aileron trim tab are accomplished as outlined in the following paragraphs.

11-67. REMOVAL OF AILERON TRIM TAB.

a. Remove the screws and fairing located on the leading edge of the aileron forward of the tab.

b. Detach the tab actuating rod from the aileron by removing the clevis bolt.

c. Remove the horizontal hinge pin.

d. Remove the tab with the actuating rod attached.

11-68. INSTALLATION OF AILERON TRIM TAB.

a. Position the tab with the actuating rod attached.

TABLE 11-7
TROUBLE SHOOTING - AILERON TRIM TAB

TROUBLE	PROBABLE CAUSE	REMEDY
a. Tab moves too far.	Soldered stop lugs located on cables in fuselage below lavatory bulkhead have come off.	Replace stop lugs and solder after readjusting tab movement.
b. Tab flutters.	Play in tab drum in elevator.	Tighten drum adjustment nut.

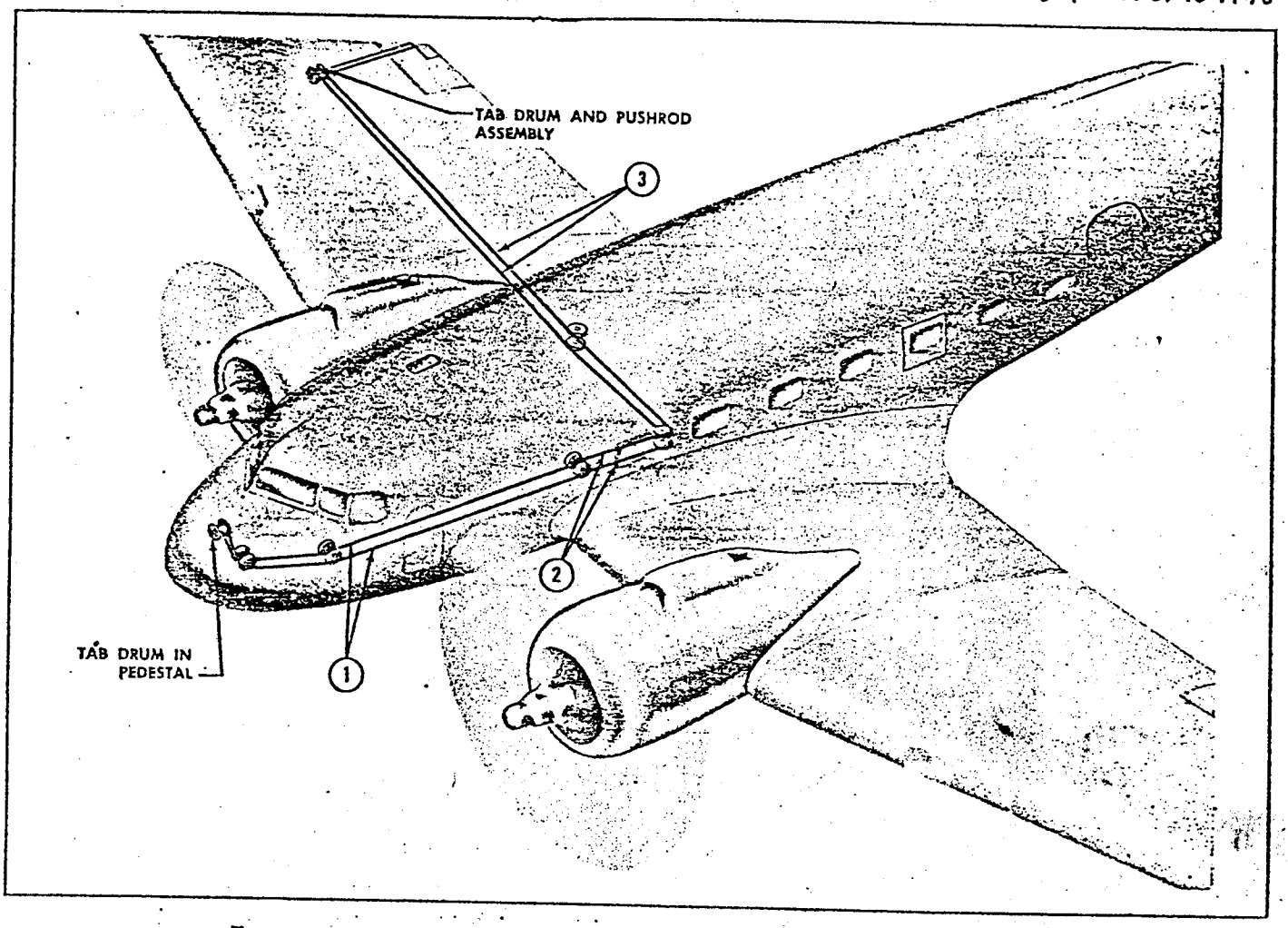

Figure 11-22. Aileron Trim Tab Controls - Key Drawing (Sheet 1 of 2)

33,144

b. Install the horizontal hinge pin.

c. Attach the tab actuating rod to the aileron with the clevis bolt.

d. Position the fairing and install the screws.

11-69. **OPERATIONAL TEST AND ADJUSTMENT OF AILERON TRIM TAB.** Perform the operational test and adjustment of the aileron trim tab as outlined in the following steps.

a. Obtain the proper cable tension by regulating the turnbuckles.

b. Open the inboard cable access door in the outer wing.

c. Manually align the two fixed stops attached to the tab cables just outboard of the turnbuckles.

d. With the two stops aligned, the trim tab should be in the neutral position. If not, bring the tab to neutral by lengthening or shortening the tab actuating rod.

Note

With Tab in neutral position, move aileron upward, noting any tab movement. If tab moves upward, shorten tab screw (actuator) rod assembly and lengthen tab attaching rod assembly. If tab moves downward, reverse rod adjusting procedures.

e. Check the tab for proper travel by pushing and pulling the cables until they are halted by the stops. If the tab travel is incorrect, adjust by loosening one turnbuckle and tightening the other. Correct travel, up and down, is 2 ($\pm\frac{1}{8}$) inches, or $12\frac{1}{2}$ ($\pm\frac{1}{2}$) degrees.

f. Check the indicator on the control pedestal. If the pointer is not in the ZERO position, reset the pointer by loosening the screw in the center of the dial.

11-70. REMOVAL OF CONTROL COLUMN.

a. Secure the elevators and ailerons in the neutral position.

b. Remove the pilot's and co-pilot's seats.

CABLE REF. NO.	DOUGLAS CABLE ASSEMBLY DRAWING NO.	NO. REQD	TYPE	CABLE LENGTH (L_1)	CABLE LENGTH (L_2)	CABLE SIZE	FITTINGS (1)	FITTINGS (2)	FITTINGS (3)	FITTINGS (4)
1	2115350-3	1	A	379		1/16 dia 7 x 7 flex.	2049220-8DS-2R	2049220-8DS-2R		
2	2074406CD	2	A	286 1/2		1/16 dia 7 x 7 flex.	AN66952LH	AN66952RH		
3	20744066CC	1	A	323 15/16		1/16 dia 7 x 7 flex.	AN66952LH	AN66952LH		

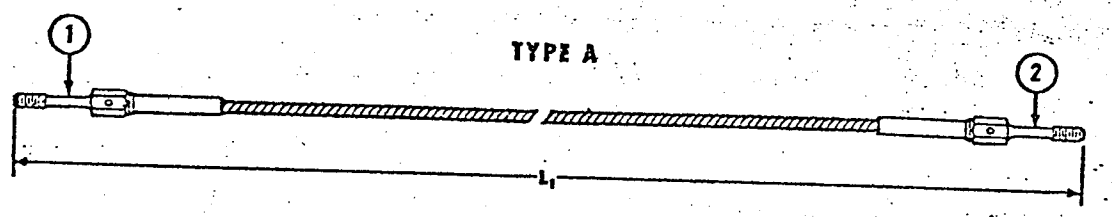

Figure 11-22. Aileron Trim Tab Controls - Cable Chart and Cable Assemblies (Sheet 2 of 2)

33,145

c. Remove the flooring from the flight compartment and the companionway, aft to station 136½.

d. Remove the landing gear mechanical latch control attached to the left floor channel.

e. Disconnect the landing gear mechanical latch cable at the torque tube, installed below the floor beams aft of station 86.

f. Remove the two floor channels from the flight compartment.

g. Remove the eight aileron guide pulleys installed beneath the control column torque tube.

h. Disconnect the aileron cables at the turnbuckles located beneath the floor beams aft of the flight compartment.

Note

Secure the cables to prevent loss of rigging.

i. Turn the control column wheels to the extreme right or left position and tie them to the column.

Note

This will secure the chains on the sprockets in the control column heads so that a chain cannot jump on the sprocket and throw one wheel out of synchronization with the other.

j. Detach the two elevator cables from the elevator horn.

k. Remove the canvas boots clamped to the bottom elbows of the column.

l. Remove the three hinge bolts attaching the control column assembly to the fuselage structure.

m. Lift out the entire control column assembly.

11-71. INSTALLATION OF CONTROL COLUMN.

a. Position the control column and install the three hinge bolts in the fuselage structure.

b. Install the canvas boots to the bottom elbows of the column.

c. Attach the two elevator cables to the elevator horn.

d. Free the control column wheels, and attach the aileron cables.

e. Install the eight aileron guide pulleys beneath the control column torque tube.

f. Install the two floor channels in the flight compartment.

g. Connect the landing gear mechanical latch cable to the torque tube installed below the floor beams aft of station 86.

h. Install the landing gear mechanical latch control to the left floor channel.

i. Install the flooring in the pilot's compartment and the companionway.

j. Install the pilot's and co-pilot's seats.

k. Free the elevators and ailerons.

11-72. REMOVAL OF CONTROL WHEEL MECHANISM.

a. Secure the ailerons in the neutral position.

b. Disconnect the control cables at the turnbuckles located under the companionway floor.

c. Remove the cover mounted on the top of the control column.

d. Cut the safetywire and remove the six bolts through the wheel shaft.

Note

Mark or tag the sprocket tooth that engages the chain, and also the chain, to insure proper synchronization when installing.

e. Lift the roller chain until the chain is free of the bronze sprocket.

f. Remove the complete wheel and sprocket assembly by pulling aft on the wheel.

CAUTION

Do not allow the chain and cable to drop into the control column.

g. Lift the chain until the stops strike the stop plate. Give the chain a quarter-turn so that the stops can be drawn through the stop plate opening.

h. Fasten the cables to the control column head so that they will not drop down into the control column when disconnected.

i. Disconnect the chain from the cable by removing the two bolts.

Note

Tag or mark one end of the chain and the corresponding cable to facilitate correct installation.

11-73. INSTALLATION OF CONTROL WHEEL MECHANISM.

a. Connect the chain to the cable with the two bolts (heads of bolts facing each other).

CAUTION

Do not cross the cables in the control column.

b. Turn the chain and insert the stops in the stop plate openings.

c. Lift the chain and insert the wheel and sprocket assembly.

Note

To synchronize the controls, fit the roller chain on the marked sprocket tooth.

d. Install the six bolts through the wheel shaft and safety as required.

e. Install the cover on the top of the control column.

f. Connect the control cables at the turnbuckles under the companionway floor.

g. Remove the locks from the ailerons.

11-74. OPERATIONAL TEST AND ADJUSTMENT OF CONTROL WHEEL. Perform the operational test and adjustment of the control wheel as outlined in the following steps.

a. Adjust the travel of the aileron control wheel and cables at the turnbuckles (paragraph 11-62).

b. Adjust cable tension in accordance with the Cable Rigging Tension Chart *(see figure 11-3)*.

c. Check the control wheel for full travel, right and left.

SECTION XII

WIRING

12-1. GENERAL AIRPLANE WIRING INFORMATION.

12-2. **GENERAL DESCRIPTION.** The purpose of the wiring data section is to furnish airplane maintenance personnel with information on the wiring of electrical and electronic equipment on the airplane. This section contains information on wiring and wire specifications, a chart of wiring symbols, the wiring diagrams, and an alphabetical table of the wiring diagrams. The wiring diagrams should be referred to in conjunction with the text as outlined in this technical order for the specific system on which maintenance work is being performed, during trouble shooting, inspection, repair, and checkout procedures of all electrical and electronics systems. Wires are identified on the diagrams by code letters and numbers which are the same as those used on the airplane.

12-3. WIRING IDENTIFICATION. The number and letter system for electrical wire identification is used on all wiring diagrams for use on the airplane. This system is designed to speed electrical maintenance operations. One or two letters are used to identify the circuit or system, followed by the basic wire number. Whenever the continuity of the wire is broken by the use of a terminal on a terminal panel, a relay, switch, electrical connector, or other items of equipment, the different segments of wire are given a letter, which follows the basic wire number. The size of the wire follows next and, if the wire is that part of the circuit that terminates in structure ground, the wire number terminates with the letter N. A typical wire number is P216A-20. The letter P indicates that the wire is part of the power system. The basic wire number is 216, and the particular segment of the wire is No. 20 gage. The different circuit letter designations are listed in the following:

BW	Passenger Warning Sign
D, DA	Propeller De-Icer Motor, Wing De-Icer Valve Motor
DC	Carburetor and Windshield De-Icer
DH	Pitot Heater
DW	Windshield Defroster
EH	Tachometer
F	Flux Gate Compass
GS	Landing Gear Safety Solenoid
H	Parapack
HB	Buffet Hot-Cup Receptacle
JA	Fuel Quantity
JP	Fuel Booster Pump
K	Attendant Signal
L, LH, LN	Cabin and Compartment Dome Lights
LA	Cockpit Lights
LD	Cabin Dome Lights
LL	Compartment Lights
LR	Reading Lights
M	Ignition
N	Navigation Lights
NA, NB	Landing Lights
NP	Passing Lights
P	Radio, Power Feeds and Inverter
P, PB, PH, PK	Battery, Power Feed and Ground Power
PA, PF, PJ	Generator
RA	Glide Slope
RC	Marker Beacon
RL, TA	Liaison Communication
RN	Radio Compass

RN	VHF Navigation System
RU	UHF Communication
RV	VHF Communication
RZ	Interphone
S, SA, SB	Starter Induction Vibrator
SR	Propeller Feathering Pump
SX	IFF Equipment
T	Engine Temperature Thermocouple
TA, TB, TD, TF	Carburetor Air Temperature, Oil Temperature and Free Air Temperature
TS	Heat and Vent Warning
W	Landing Gear Warning Signal
WB	Bail-Out Signal
WC	Carbon Monoxide Indicator
WD	Door Open Warning Signal
WP	Paratroop Warning Signal
WX	Blower Warning
Y	Panel, Compass and Instrument Lights
YA	Fluorescent Lighting
ZP, ZE	Engine Primer and Oil Dilution Solenoid

12-4. WIRING. Wire size in the electrical system ranges from No. 0 to No. 22. Since the size of an electrical wire decreases as the gage number increases, the No. 0 is the largest wire and the No. 22 is the smallest. Four factors determine the current-carrying capacity of any electrical wire: its length, cross-sectional area, material, and temperature. Wire material in airplane wiring may be either aluminum or tinned copper. Aluminum wires are identified as such on the wiring diagrams. All wires not identified as aluminum on the diagram are either tinned copper, or thermocouple leads, which are identified with a symbol representing the alloy of which they are made. All airplane wires are made up of small wires bundled together, to increase flexibility. The sum of the cross-sectional areas of the individual small wires indicates the gage of the wire. Aluminum wire may be used to replace copper wire, provided the cross-sectional area of the aluminum wire so used is approximately 1.8 times the cross-sectional area of the copper wire being replaced. Thermocouple leads are generally of two kinds; either an iron wire and a constantan wire, or a chromel wire and an alumel wire. The last three materials are special alloys having particular electrical characteristics, and are frequently used in airplane circuits.

CAUTION

Do not replace thermocouple leads of one kind with leads of another kind. Always use an exact replacement, as indicated on the appropriate wiring diagram. Very erratic temperature indications will result if the wrong type of thermocouple leads are installed. Thermocouple leads are color-coded. Iron constanstan leads have the wires coded yellow and black. Chromel-alumel leads are coded green and white. Always check the wiring diagram for the correct kind of leads before making a replacement.

12-5. Shielded wire is used in the electrical system to reduce electrostatic radio disturbance and interaction between the magnetic fields of operating circuits. Shielded wire may be of the single-conductor or multiple-conductor type. Always consult the applicable wiring diagram before making replacements, to insure that the correct type of wire is used.

12-6. TERMINAL CONNECTORS. Wire junctions which do not terminate in pin-and-socket type connector plugs are lugged for fastening to the terminal strips with solderless connectors. There are solderless connectors for all sizes of airplane wire. The terminals are pretinned, and are installed by slipping them over the ends of the airplane wire, after the insulation has been removed, and staking them on by means of pressure applied by a special tool. This tool makes a small rectangular indenture in the side of the lug and clamps it firmly to the wire. This type of connection facilitates rapid repair and creates a low-resistance connection of great mechanical security.

12-7. AIRPLANE ELECTRICAL SOLDERING. Where it is necessary to repair an electrical solder-type joint, as in the back of a pin-and-socket type connector, use a nonacid rosin soldering flux. Apply sufficient heat to the soldering point to insure complete electrical bondings, as surface soldering can result in a high-resistance connection. Do not allow surplus solder to form tips, as these may cause a shorted condition between plug pins.

12-8. ELECTRICAL WIRING REPAIRS. If an electrical wire is broken or damaged, replace the entire wire between the nearest two junctions with a wire of the same gage and length, with equivalent insulation. Wire may be replaced, in conditions of emergency, by splicing, soldering, and taping the break. In certain installations such as thermocouple leads, the

resistance change caused by changing the length of the wire is too critical to make it practical to attempt repair.

12-9. When removing airplane wire insulation, great care must be taken not to damage the wire. Nicking or cutting strands may result in insufficient carrying capacity because of decreased cross-sectional area, or possible vibrational failure. Airplane wire may be carefully stripped with a knife, but a standard wire-stripping tool is preferable.

CAUTION

When soldering airplane wire, always use rosin flux. Do not use acid flux, as its corrosive effect may cause eventual failure.

Note

When replacing an airplane wire, install the same size as that used in the original installation, or, in an emergency, the next size larger. Installing a smaller wire than that for which the circuit has been designed may result in a burned-out wire or excessive voltage drop, causing failure or malfunctioning of the unit.

12-10. **BONDING.** Bonding is the process of mechanically connecting certain metal parts in such a way that they make a good electrical contact. The objectives of bonding are to provide a low-resistance current path for the electrical equipment which uses the airplane structure as a return path, to provide good conductivity between surfaces acting as shields, to reduce radio noise, and to eliminate fire hazards which might be caused by static electricity generating and discharging in the form of sparks. Therefore, when removing and replacing any unit on the airplane, whether it is electrical or structural, make certain that it is installed correctly, not only regarding mechanical connections and operation, but also regarding electrical bonding.

12-11. Three separate conditions are usually encountered in bonding: use of the contacting parts with conducting finishes, or surface conditions which may be bonded without stripping or removing of surfaces; use of contacting parts from which nonconducting finishes must be removed; and use of replaceable parts between dissimilar metals to limit the corrosion that contact between dissimilar metals produces. Flexible bond jumpers of plated Phosphorbronze are provided for bonding items of equipment that are mounted on rubber vibration dampers.

12-12. BONDING PARTS WITH CONDUCTING FINISHES. Bare metal or surfaces plated with chromium, cadmium, copper, solder tin, or zinc are usually satisfactory for bonding without additional finishing. Chemically treated magnesium surfaces and certain graphite pigment preparations are also satisfactory for bonding. Specifications do not ordinarily require additional bonding in these cases. Certain types of joining methods also obviate the necessity for bonding. When permanent metal joints are made by welding, soldering, sweating, riveting, bolting, or fastening with taper pins, the assembly need not be bonded, regardless of the exterior finish.

12-13. BONDING PARTS WITH NONCONDUCTING SURFACES. Certain finishes and surface treatment, such as paints, anodics, Alrok, oxides, stains, phosphates, and dyes, act as nonconductors and must be removed or some extra connection employed as outlined in the following steps.

a. Use a wash thinner or other suitable solvent to remove paints, stains, and dyes from contacting metal surfaces; do not use sandpaper, metal wool, a wire brush, or a file.

b. Use fine sandpaper or metal wool to remove anodic, Alrok, and phosphate finishes from contacting metal surfaces.

c. Do not remove the protective finish from magnesium. Bonding of magnesium parts should be accomplished only through the use of star washers on bolts or screw heads and on nuts.

12-14. BONDING DISSIMILAR METAL CONTACTS. Dissimilar metals in contact with each other can set up an electrolytic action which corrodes the metals. Therefore, dissimilar metals should be separated and bonded by replaceable parts. Corrosion is then limited to the replaceable parts, and the conducting surfaces of the permanent parts are protected. Whenever possible, dissimilar metals should be separated by washers at points of electrical contact. Where brass, bronze, copper, nickel plating, Monel, or silver-solder surfaces contact either aluminum or various types of steel, use cadmium-plated parts to separate aluminum and steel. In all cases, use replaceable parts of the same type as those installed in the original assembly.

12-15. ELECTRICAL SYMBOLS. For a complete explanation of all graphic symbols used in the wiring diagrams, see figure 12-1.

12-16. PNEUDRAULICS WIRING DIAGRAMS.

12-17. **GENERAL DESCRIPTION.** Table 12-1 lists wiring diagrams used with the pneudraulics systems. Diagrams which concern more than one system will be found in the section to which they primarily apply. To locate wiring diagrams used on more than one system, refer to the alphabetical index.

TABLE 12-1
PNEUDRAULICS WIRING DIAGRAM LIST

Figure No.	Title
12-2.	Carburetor and Windshield De-Icer
12-3.	CB Type Fire Extinguisher Circuit
12-4.	CB Type Fire Extinguisher Circuit (Airplanes with Bus Priority System)
12-5.	Heat and Vent Warning Light Circuit (C-47 Series Only)
12-6.	Heat and Vent Warning Light Circuit (C-117 Series Only)
12-7.	Propeller De-Icer Motor, Wing De-Icer Valve Motor Circuit
12-8.	Windshield Defroster Circuit (C-47 Series Only)
12-9.	Windshield Defroster Circuit (C-117 Series Only)

12-18. POWER PLANT WIRING DIAGRAMS.

12-19. GENERAL DESCRIPTION. Table 12-2 lists wiring diagrams used with the power plant and its components. Diagrams which concern more than one system will be found in the section to which they primarily apply. To locate wiring diagrams used on more than one system, refer to the alphabetical index.

TABLE 12-2
POWER PLANT WIRING DIAGRAM LIST

Figure No.	Title
12-10.	Carburetor Air Induction Circuit
12-11.	Engine Primer and Oil Dilution Solenoid Circuit
12-12.	Ignition Circuit
12-13.	Propeller Feathering Pump Circuit

12-20. FUEL SYSTEM WIRING DIAGRAMS.

12-21. GENERAL DESCRIPTION. Table 12-3 is the wiring diagram used with the fuel system. Diagrams which concern more than one system will be found in the section to which they primarily apply. To locate wiring diagrams used on more than one system, refer to the alphabetical index.

TABLE 12-3
FUEL SYSTEM WIRING DIAGRAM

Figure No.	Title
12-14.	Fuel Booster Pump

12-22. INSTRUMENT WIRING DIAGRAMS.

12-23. GENERAL DESCRIPTION. Table 12-4 lists wiring diagrams used with the instruments on the airplane. Diagrams which concern more than one system will be found in the section to which they primarily apply. To locate wiring diagrams used on more than one system, refer to the alphabetical index.

TABLE 12-4
INSTRUMENT WIRING DIAGRAM LIST

Figure No.	Title
12-15.	Carburetor Air Temperature, Oil Temperature, and Free Air Temperature Circuit
12-16.	Engine Temperature Thermocouple Circuit
12-17.	Fuel Quantity Circuit
12-18.	Pitot Heater Circuit
12-19.	Tachometer Circuit

12-24. ELECTRICAL SYSTEM WIRING DIAGRAMS.

12-25. GENERAL DESCRIPTION. Table 12-5 lists wiring diagrams used with the electrical system. Diagrams which concern more than one system will be found in the section to which they primarily apply. To locate wiring diagrams used on more than one system, refer to the alphabetical index.

TABLE 12-5
ELECTRICAL SYSTEM WIRING DIAGRAM LIST

Figure No.	Title
12-20.	Battery, Power Feeds, and Ground Power Circuit
12-21.	Blower Warning Circuit
12-22.	Anticollision Lights (Red Rotating Beacon)
12-23.	Cabin and Compartment Dome Lights Circuit (C-47 Series Only)

TABLE 12-5 (Continued)

Figure No.	Title
12-24.	Cabin Dome Lights Circuit (C-117 Series Only)
12-25.	Cockpit Lighting Circuit (C-47 Series Only)
12-26.	Cockpit Lighting Circuit (C-117 Series Only)
12-27.	Compartment Lights Circuit (C-117 Series Only)
12-28.	Door Open Warning Signal Circuit (C-47 Series Only)
12-29.	Door Open Warning Signal Circuit (C-117 Series Only)
12-30.	Fluorescent Lighting Circuit
12-31.	Generator
12-32.	Generator Wiring Circuit (Airplanes with Bus Priority System)
12-33.	Accessory Power Plant
12-34.	Landing Lights Circuit
12-35.	Passenger Warning Sign Circuit (C-117 Series Only)
12-36.	Passing Lights Circuit
12-37.	Panel, Compass and Instrument Lights Circuit
12-38.	Reading Lights Circuit (C-117 Series Only)
12-39.	Navigation Lights (C-47 Series Only)
12-40.	Navigation Lights Circuit (C-117 Series Only)
12-41.	Starter Induction Vibrator Circuit
12-42.	Power Distribution Circuit (Airplanes with Bus Priority System)
12-43.	Instrument Lighting Circuit (Airplanes with Bus Priority System)
12-44.	Inverter Wiring Circuit (Airplanes with Bus Priority System)

12-26. RADIO, COMMUNICATION AND NAVIGATION WIRING DIAGRAMS.

12-27. GENERAL DESCRIPTION. Table 12-6 lists the wiring diagrams used with the radio, communication and navigation equipment. Diagrams which concern more than one system will be found in the section to which they primarily apply. To locate wiring diagrams used on more than one system, refer to the alphabetical index.

TABLE 12-6

RADIO, COMMUNICATION, AND NAVIGATION WIRING DIAGRAM LIST

Figure No.	Title
12-45.	Flux Gate Compass Circuit
12-46.	Glide Slope—AN/ARN-18 Circuit
12-47.	IFF Equipment—AN/APX-6
12-48.	IFF Equipment AN/APX-25
12-49.	Interphone—RC-36-B Circuit (C-47 Series Only)
12-50.	Interphone—AIC-3 Circuit (C-47 Series Only)
12-51.	Interphone—AIC-3 Circuit (C-117 Series Only)
12-52.	Liaison Communication —AN/ARC-8 Circuit
12-53.	Marker Beacon — RC-193 Circuit
12-54.	Radio Compass — AN/ARN-7 Circuit

TABLE 12-6 (Continued)

Figure No.	Title
12-55.	Radio Compass Circuit (Airplanes with Dual AN/ARN-6)
12-56.	Radio Power Feeds and Inverter Circuit
12-57.	UHF Communication—AN/ARC-27 Circuit
12-58.	VHF Communication — AN/ARC-3 Circuit
12-59.	VHF Navigation System—AN/ARN-14 Circuit
12-60.	TACAN AN/ARN-21
12-61.	TACAN/VOR Switching

12-28. LANDING GEAR WIRING DIAGRAMS.

12-29. GENERAL DESCRIPTION. Table 12-7 is the wiring diagram used with the landing gear. Diagrams which concern more than one system will be found in the section to which they primarily apply. To locate wiring diagrams used on more than one system, refer to the alphabetical index.

TABLE 12-7

LANDING GEAR WIRING DIAGRAM LIST

Figure No.	Title
12-62.	Landing Gear Warning Circuit
12-63.	Landing Gear Safety Solenoid Circuit (C-47 Series Only)

12-30. MISCELLANEOUS WIRING DIAGRAMS.

12-31. GENERAL DESCRIPTION. Table 12-8 lists miscellaneous wiring diagrams used on the aircraft. Diagrams which concern more than one system will be found in the section to which they primarily apply. To locate wiring diagrams used on more than one system, refer to the alphabetical index.

TABLE 12-8

MISCELLANEOUS WIRING DIAGRAM LIST

Figure No.	Title
12-64.	Attendant Signal Circuit (C-117 Series Only)
12-65.	Bail-Out Signal Circuit (C-47 Series Only)
12-66.	Buffet Hot Cup Receptacle Circuit (C-117 Series Only)
12-67.	Carbon Monoxide Indicator Circuit (C-117 Series Only)
12-68.	Parapack Circuit (C-47 Series Only)
12-69.	Paratroop Warning Signal Circuit (C-47 Series Only)

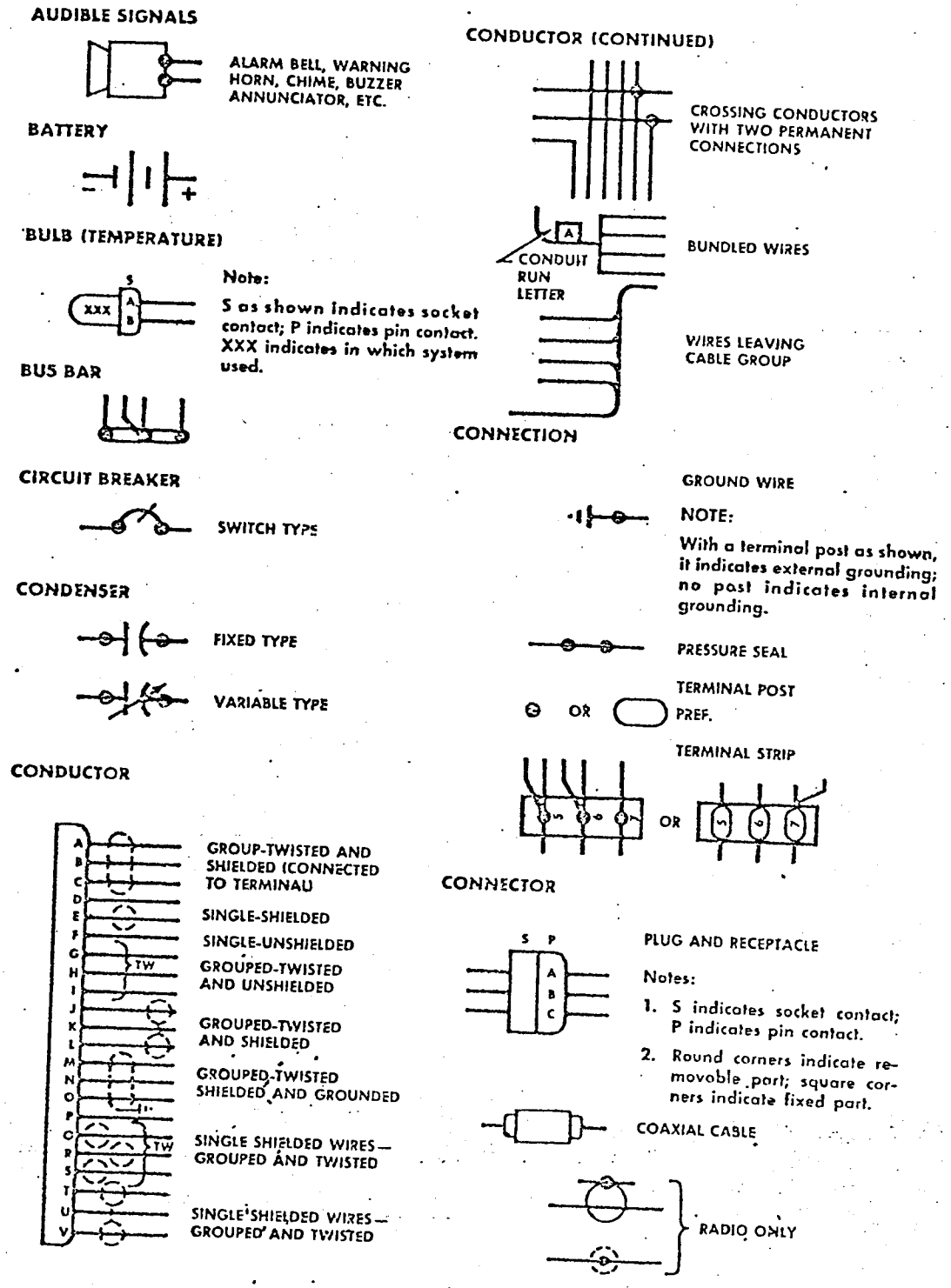

Figure 12-1. Electrical Symbols (Sheet 1 of 4)

31,108

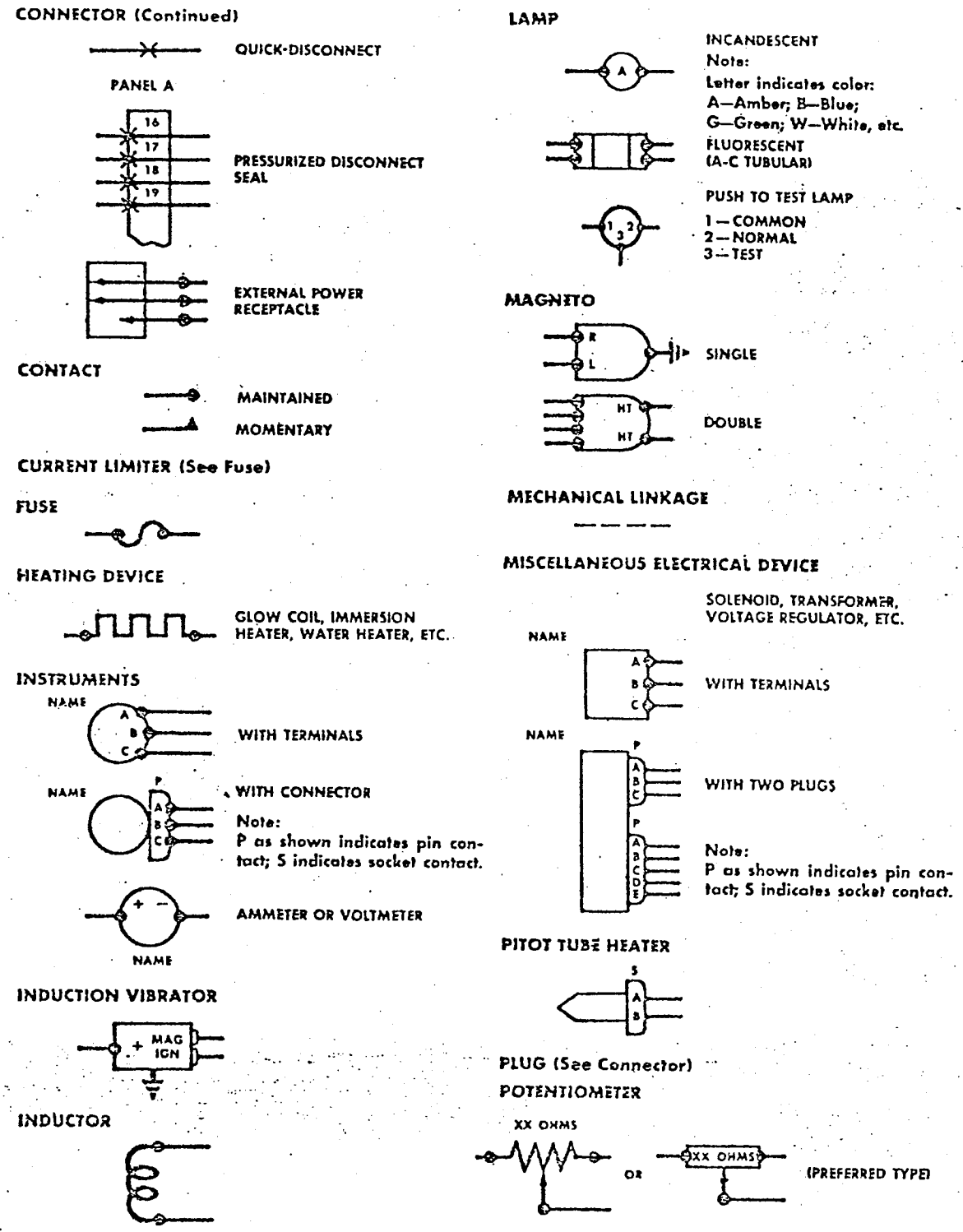

Figure 12-1. Electrical Symbols (Sheet 2 of 4)

31,107

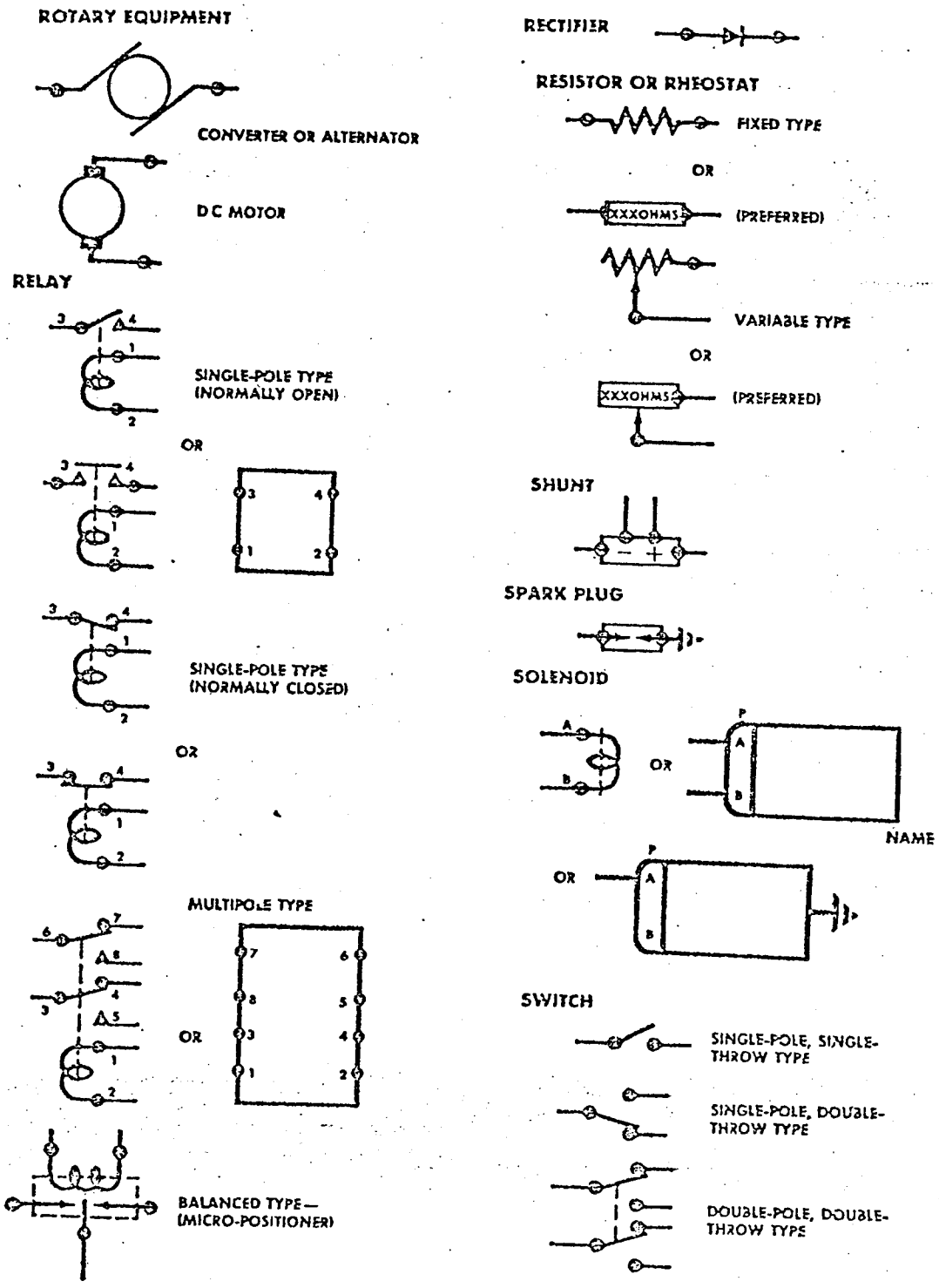

Figure 12-1. Electrical Symbols (Sheet 3 of 4)

31,108

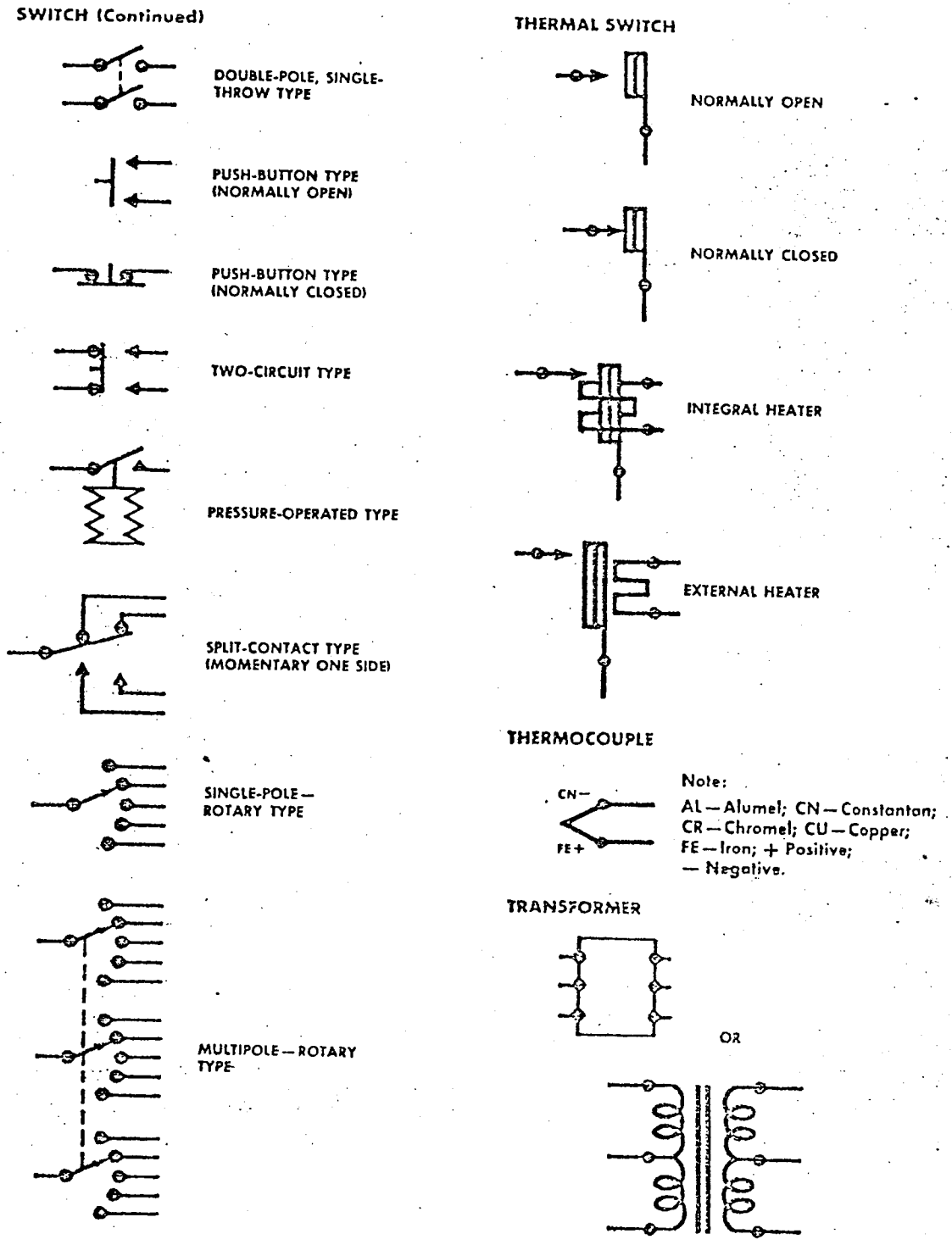

Figure 12-1. Electrical Symbols (Sheet 4 of 4)

31,109

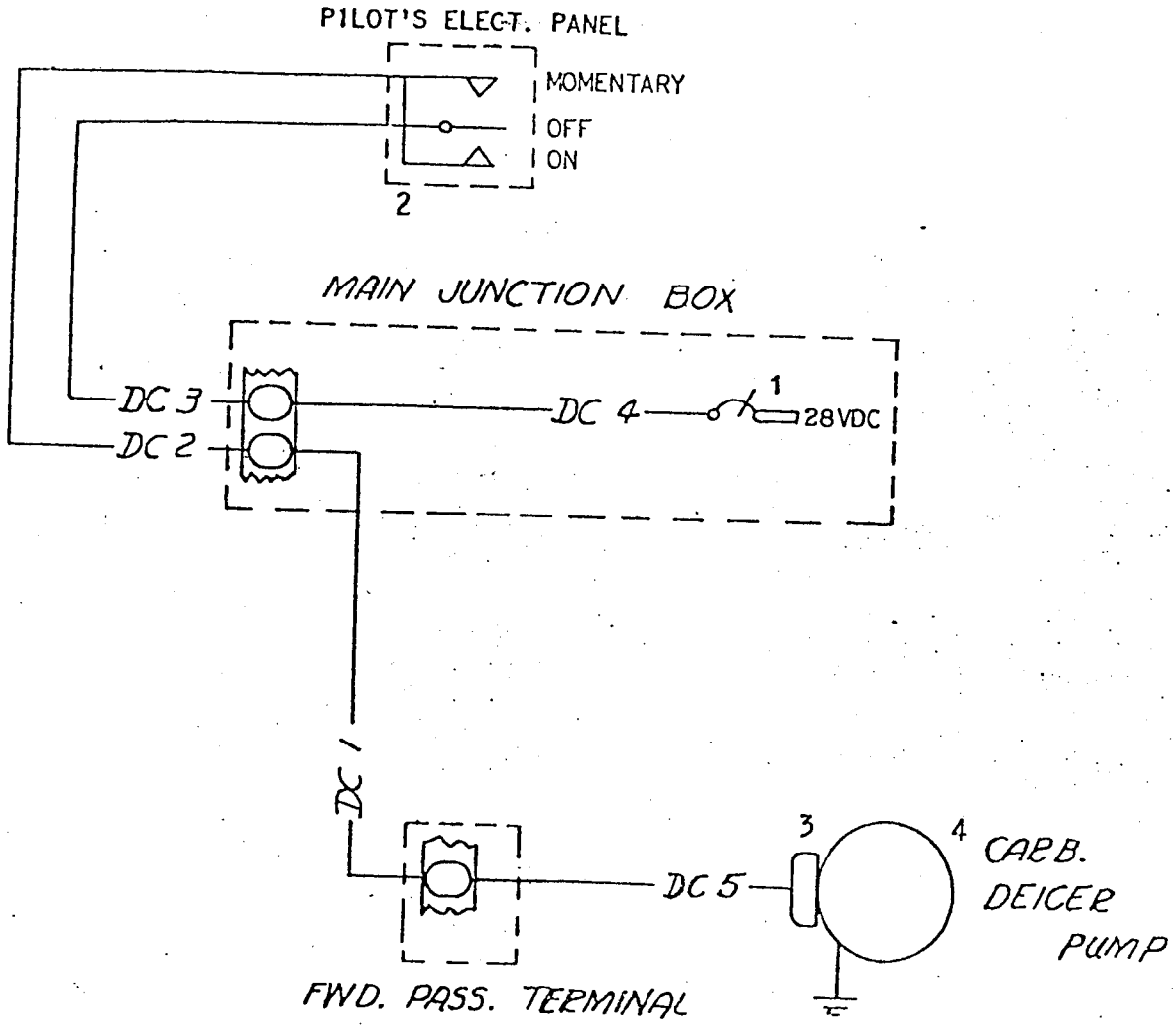

EQUIPMENT		
ITEM NO.	DESCRIPTION	PART NUMBER
1	CIRCUIT BREAKER	AN3160-5
2	SWITCH	AN3021-6
3	PLUG	AN3106-12S-4S
4	PUMP	400-7 (WELDON)

WIRE TABLE

WIRE NO.	SIZE
DC1	18
DC2	18
DC3	18
DC4	18
DC5	18

REF 5209957:27.0

31.110

Figure 12-2. Carburetor and Windshield De-Icer

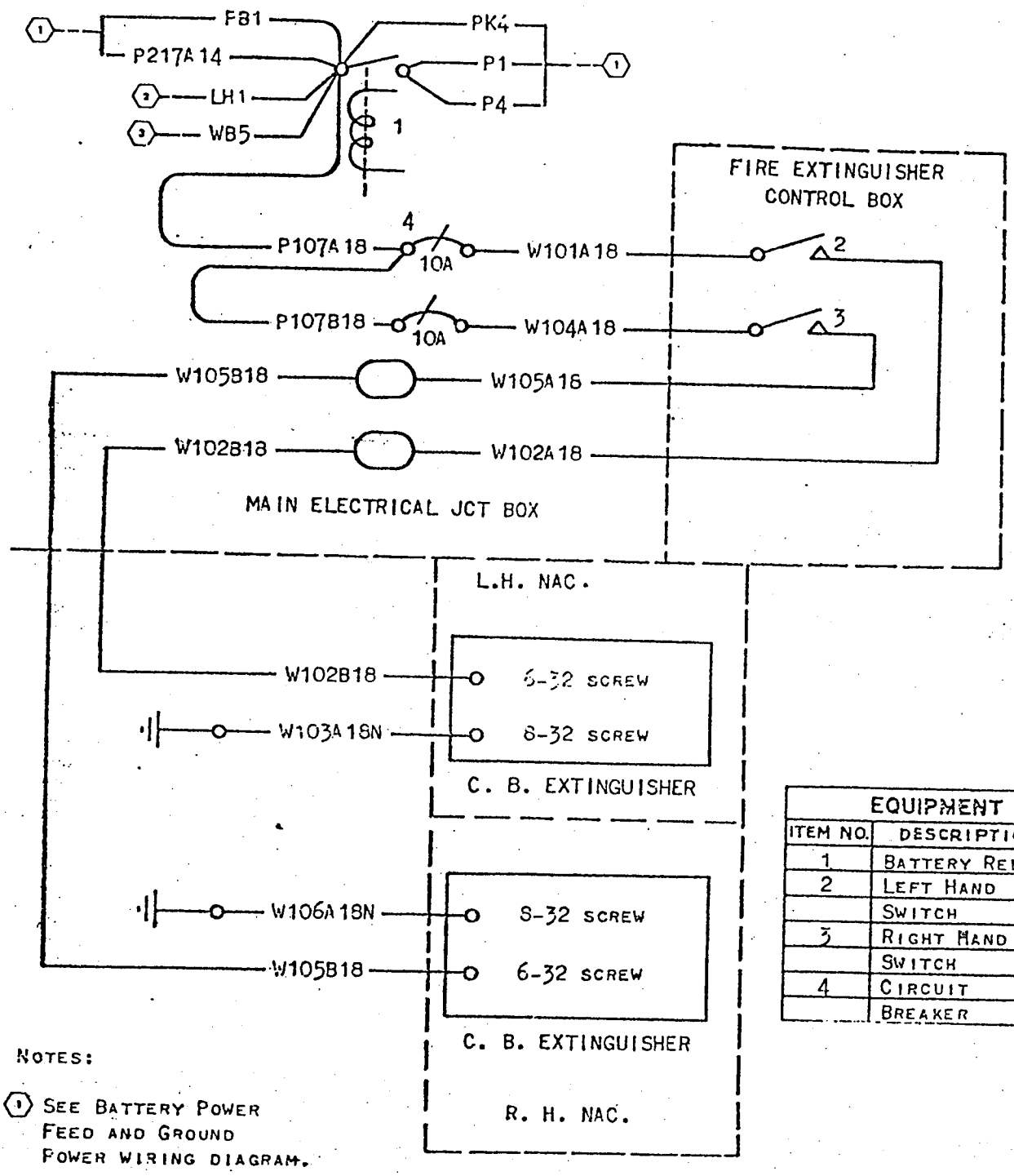

EQUIPMENT	
ITEM NO.	DESCRIPTION
1	BATTERY RELAY
2	LEFT HAND
	SWITCH
3	RIGHT HAND
	SWITCH
4	CIRCUIT
	BREAKER

NOTES:

(1) SEE BATTERY POWER FEED AND GROUND POWER WIRING DIAGRAM.

(2) SEE CABIN AND COMPARTMENT DOME LIGHTS WIRING DIAGRAM.

(3) SEE BAIL-OUT SIGNAL WIRING DIAGRAM.

Figure 12-3. CB Type Fire Extinguisher Circuit

31,111

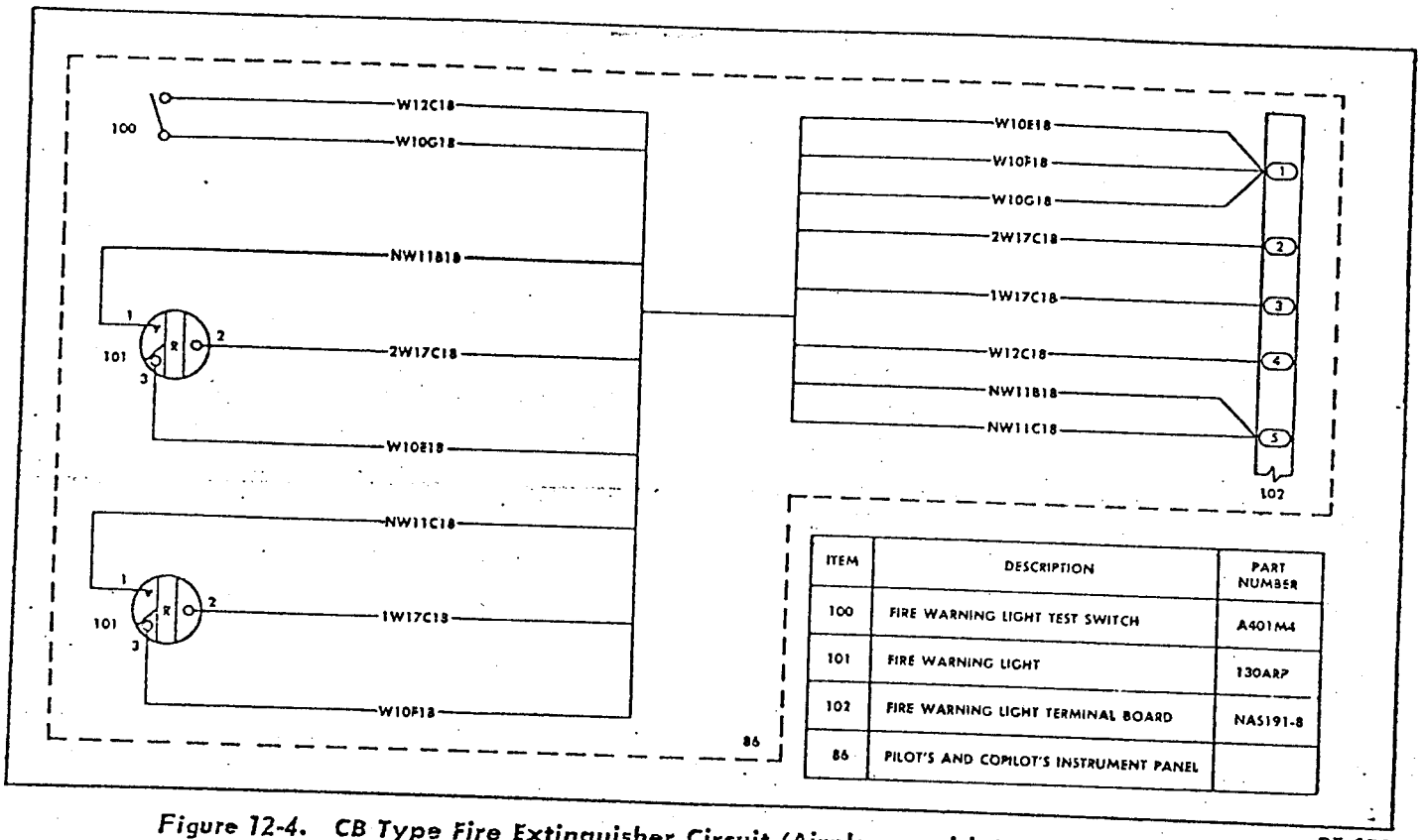

ITEM	DESCRIPTION	PART NUMBER
100	FIRE WARNING LIGHT TEST SWITCH	A401M4
101	FIRE WARNING LIGHT	130ARP
102	FIRE WARNING LIGHT TERMINAL BOARD	NAS191-8
86	PILOT'S AND COPILOT'S INSTRUMENT PANEL	

35,622

Figure 12-4. CB Type Fire Extinguisher Circuit (Airplanes with Bus Priority System)

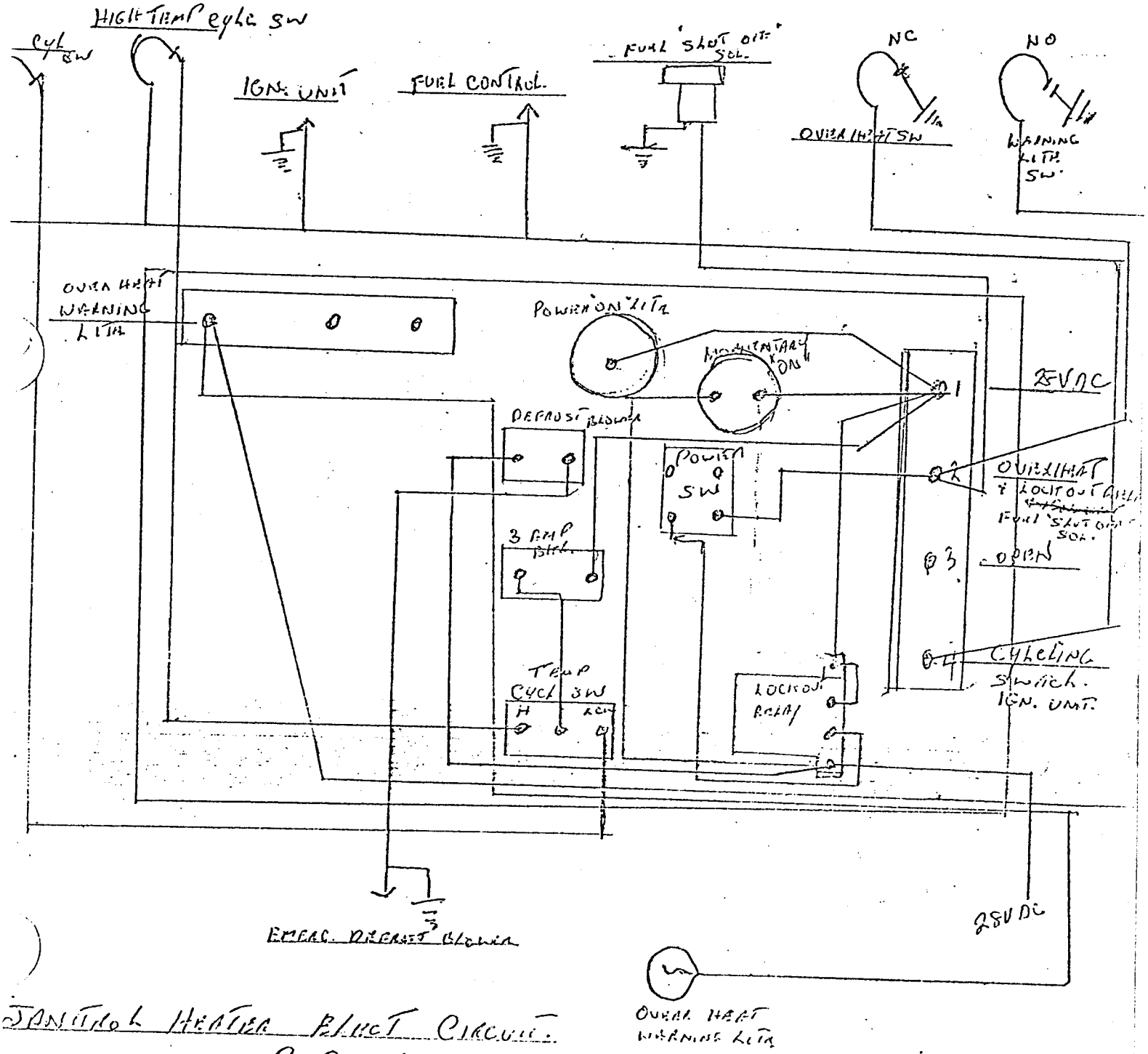

JANITROL HEATER PILOT CIRCUIT.

C. GCZG

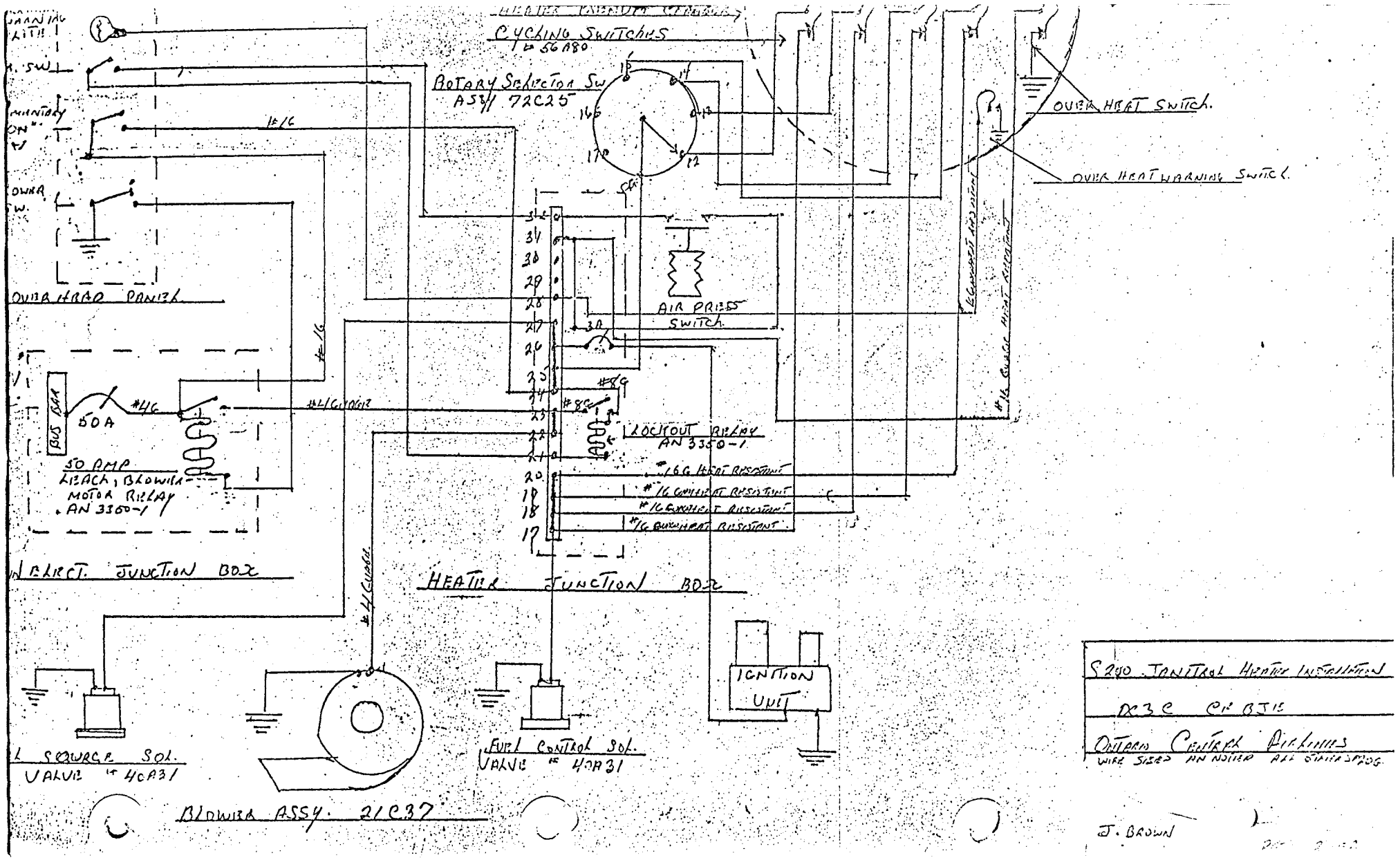

S290 JANITROL HEATER INSTALLATION

DX3C CP BJ15

ONTARIO CENTRAL AIRLINES

WIRE SIZES AN NOTED ALL OTHER SPEC.

J. BROWN

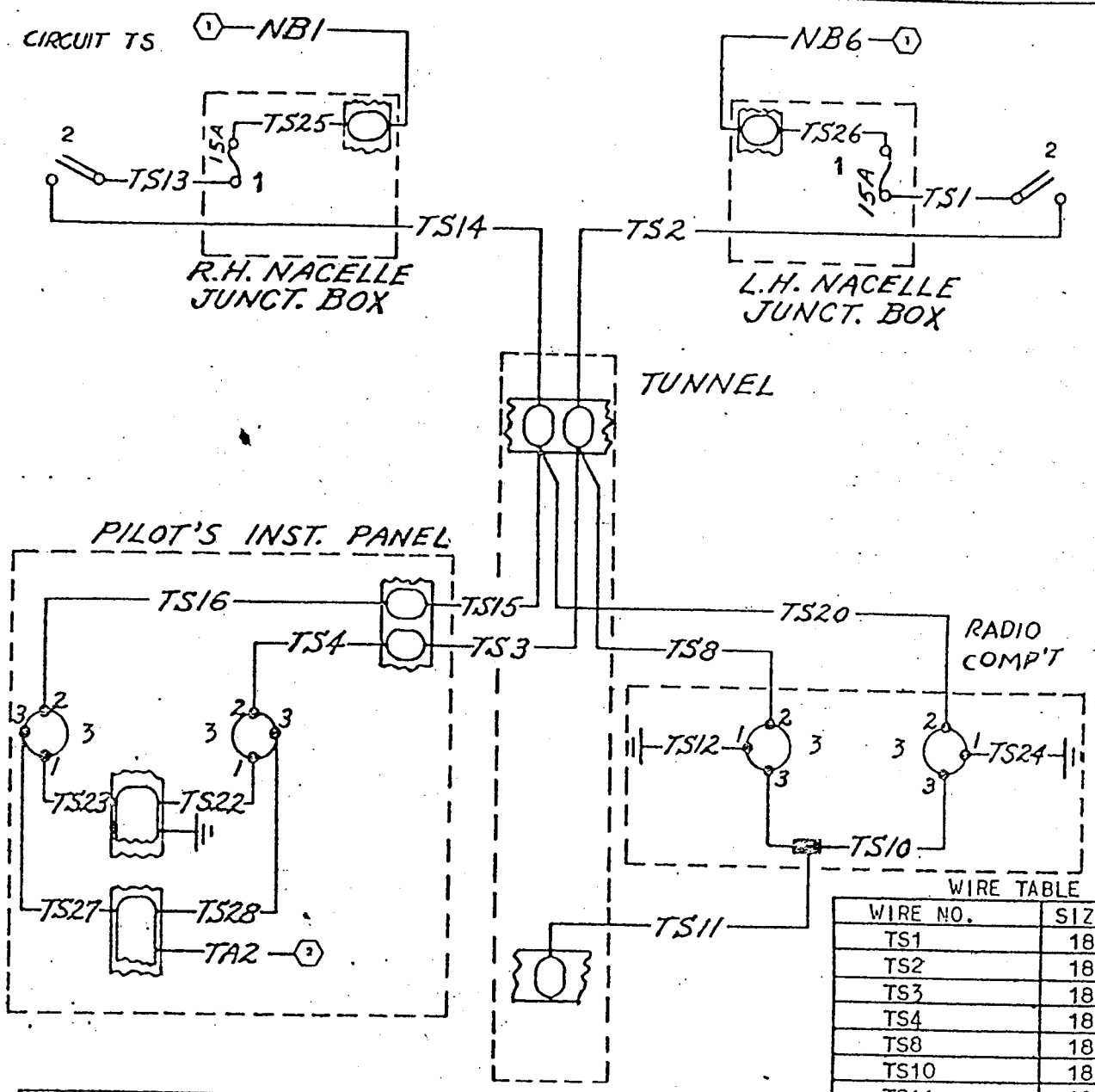

EQUIPMENT		
ITEM NO.	DESCRIPTION	PART NUMBER
1	FUSE	5AG (LITTLE FUSE)
2	SWITCH-THERMO	732-1F (FENWAL)
3	LIGHT	AAF44A18454-2

WIRE TABLE

WIRE NO.	SIZE
TS1	18
TS2	18
TS3	18
TS4	18
TS8	18
TS10	18
TS11	18
TS12	18
TS13	18
TS14	18
TS15	18
TS16	18
TS20	18
TS22	18
TS23	18
TS24	18
TS25	18
TS26	18
TS27	18
TS28	18

NOTES:

(1) SEE LANDING LIGHT SYSTEM WIRING DIAGRAM.

(2) SEE CARBURETOR AIR TEMPERATURE, OIL TEMPERATURE WIRING DIAGRAM.

REF 5209957:17.0

Figure 12-5. Heat and Vent Warning Light Circuit (C-47 Series Only)

31.112

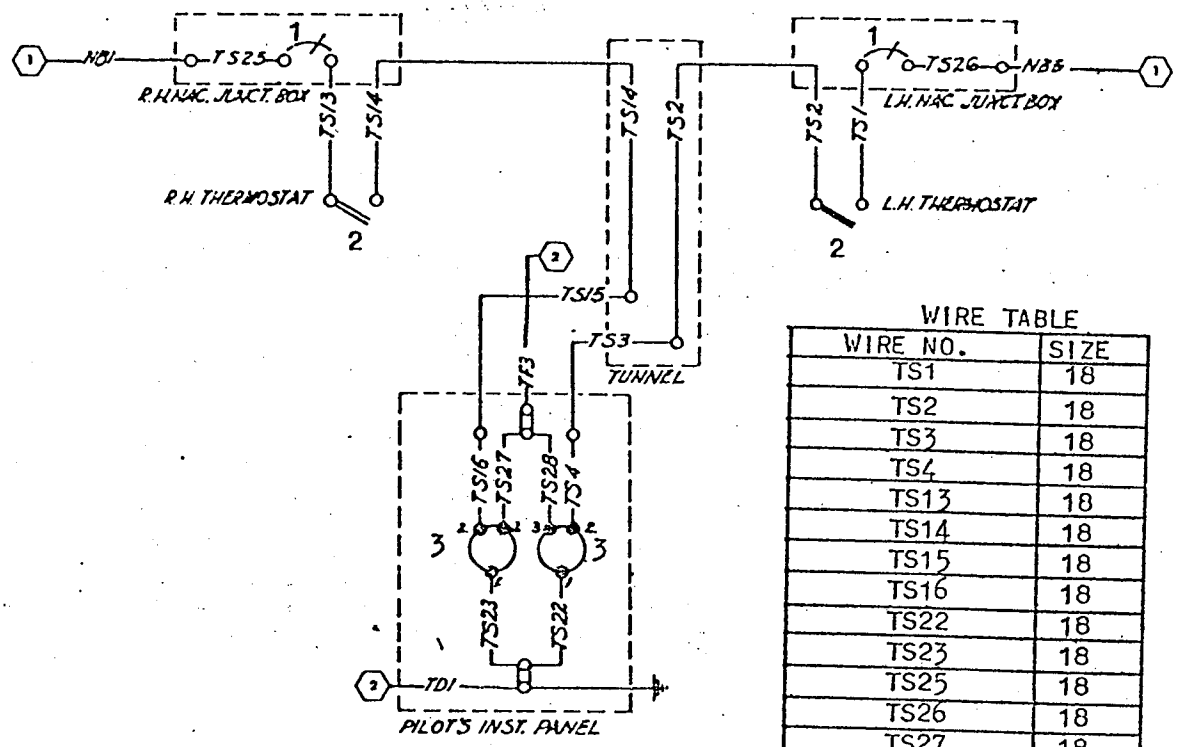

WIRE TABLE

WIRE NO.	SIZE
TS1	18
TS2	18
TS3	18
TS4	18
TS13	18
TS14	18
TS15	18
TS16	18
TS22	18
TS23	18
TS25	18
TS26	18
TS27	18
TS28	18

EQUIPMENT

ITEM NO.	DESCRIPTION	PART NUMBER
1	CIRCUIT BREAKER	AN3160-5
2	THERMOSWITCH	732-1F (FENWAL)
3	LIGHT	AAF44A18454-2

NOTES:

(1) SEE LANDING LIGHT WIRING DIAGRAM.

(2) SEE CARBURETOR, OIL AND FREE AIR TEMPERATURE WIRING DIAGRAM.

REF 7483358:28.0

31,113

Figure 12-6. Heat and Vent Warning Light Circuit (C-117 Series Only)

CIRCUIT DA,D

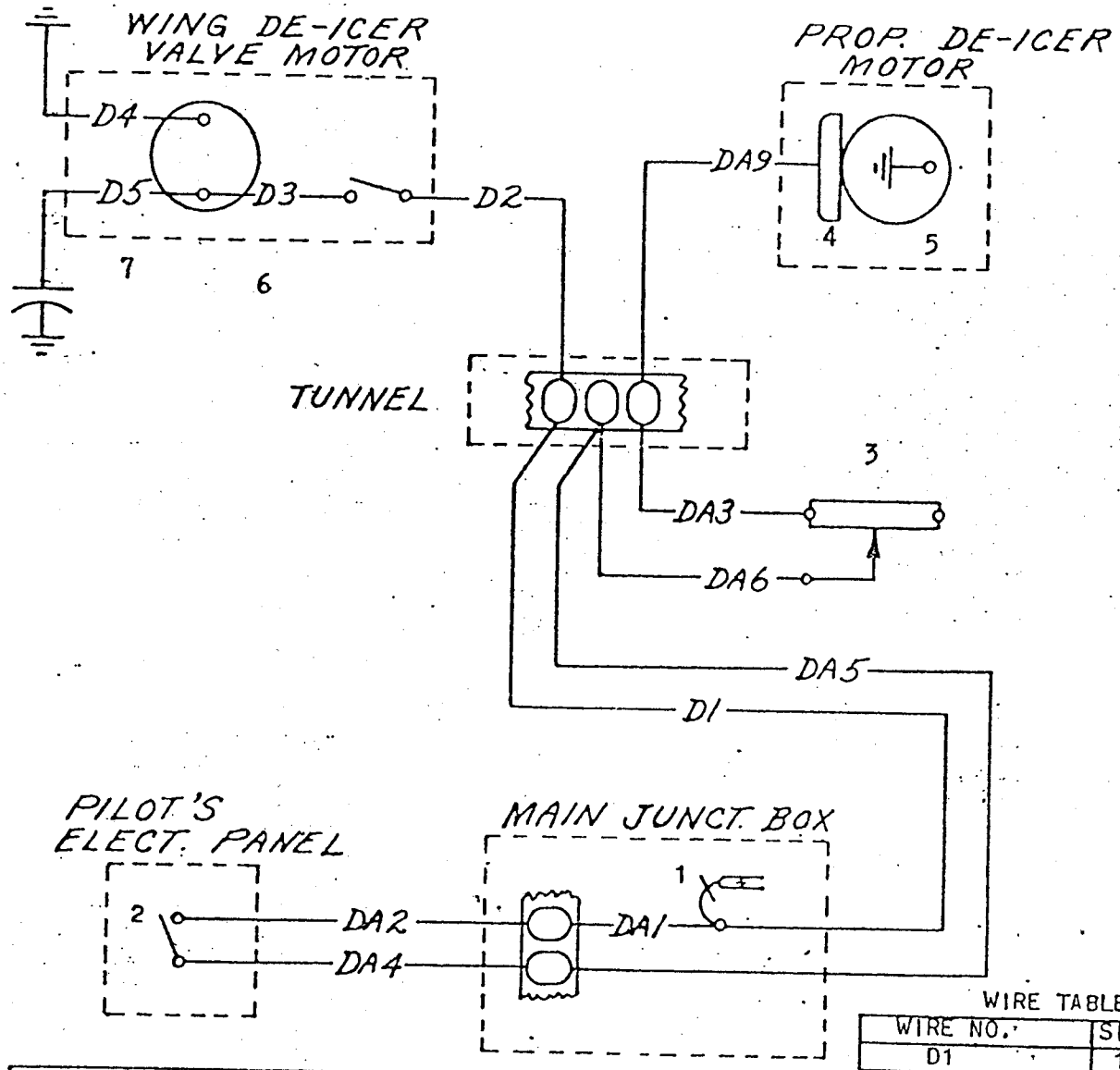

EQUIPMENT		
ITEM NO.	DESCRIPTION	PART NUMBER
1	CIRCUIT BREAKER	AN3160-10
2	SWITCH	11TS1-21 (MICRO SWITCH CO.)
3	RHEOSTAT	FURNISH WITH PUMP (OHMITE)
4	PLUG	AN3108-12-4S
5	MOTOR	100-A (WELDON)
6	VALVE MOTOR	FURNISHED WITH VALVE (ECLIPSE)
7	CAPACITOR	CA-275X

WIRE TABLE

WIRE NO.	SIZE
D1	18
D2	18
D3	18
D4	18
D5	16
DA1	18
DA2	18
DA3	18
DA4	18
DA5	18
DA6	18
DA9	18

REF 5209957:49.0A

Figure 12-7. Propeller De-icer Motor, Wing De-icer Valve Motor Circuit

31,114

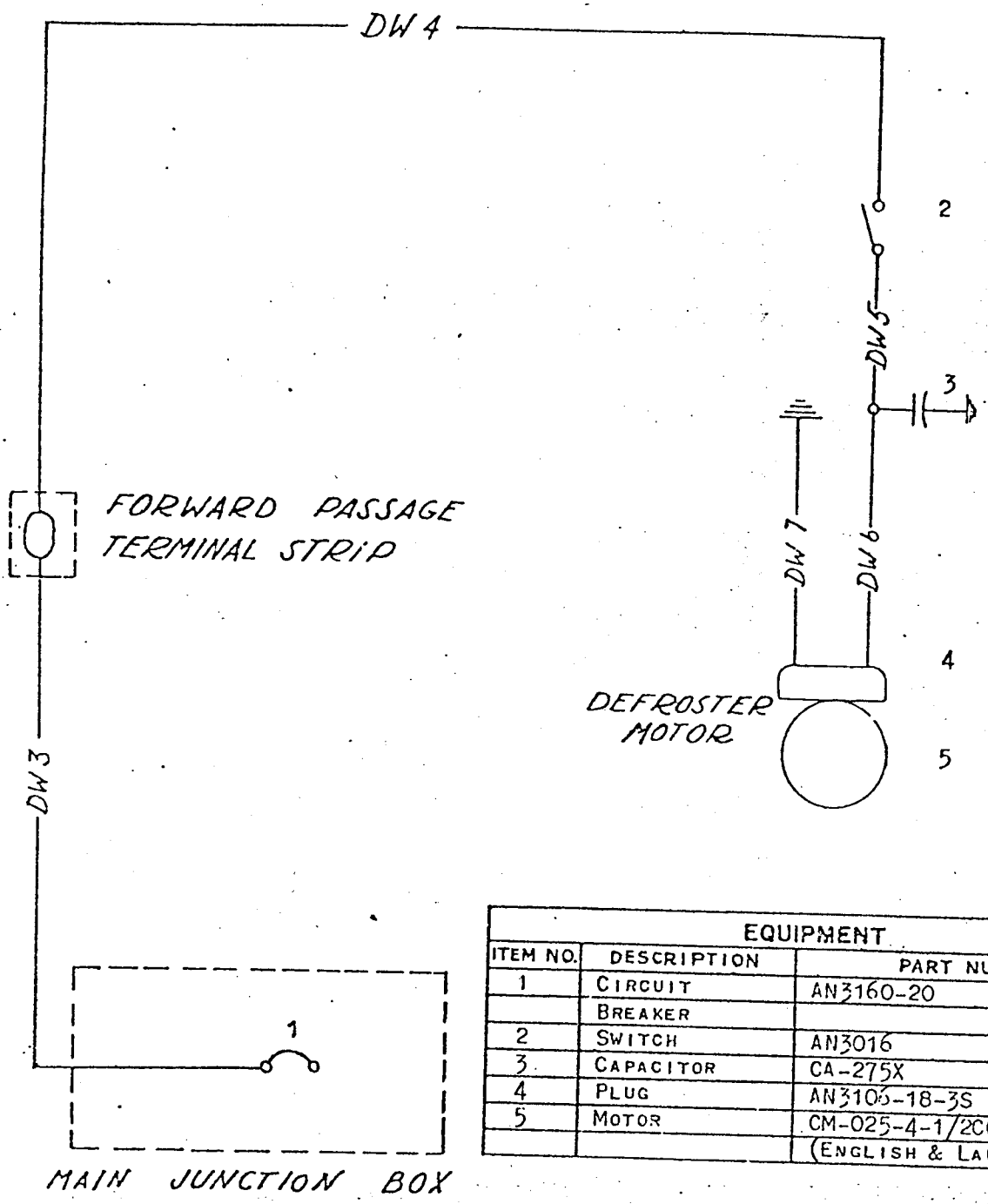

EQUIPMENT		
ITEM NO.	DESCRIPTION	PART NUMBER
1	CIRCUIT	AN3160-20
	BREAKER	
2	SWITCH	AN3016
3	CAPACITOR	CA-275X
4	PLUG	AN3106-18-3S
5	MOTOR	CM-025-4-1/2CC
		(ENGLISH & LAUER)

WIRE TABLE

WIRE NO.	SIZE
DW3	16
DW4	16
DW5	16
DW6	16
DW7	16

REF 5209957:48.0

Figure 12-8. Windshield Defroster Circuit (C-47 Series Only)

31,115

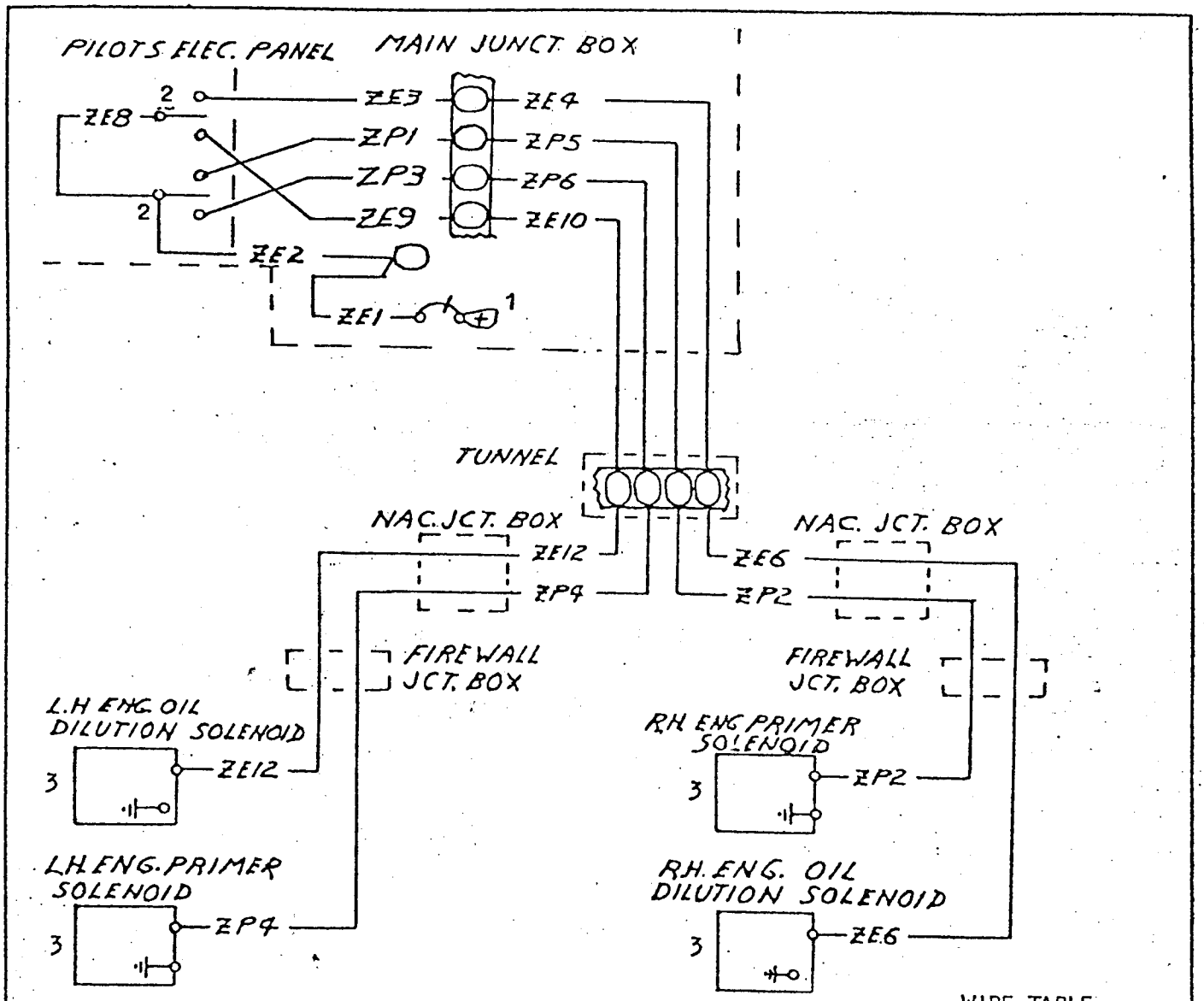

WIRE TABLE

WIRE NO.	SIZE
ZE1	18
ZE2	18
ZE3	18
ZE4	18
ZE6	18
ZE8	18
ZE9	18
ZE10	18
ZE12	18
ZP1	18
ZP2	18
ZP3	18
ZP4	18
ZP5	18
ZP6	18

EQUIPMENT

ITEM NO.	DESCRIPTION	PART NUMBER
1	CIRCUIT BREAKER	AN3160-15
2	SWITCH	AN3021-7
3	SOLENOID	AC37D6210

REF 7403356:22.A

31,118

Figure 12-11. Engine Primer and Oil Dilution Solenoid Circuit

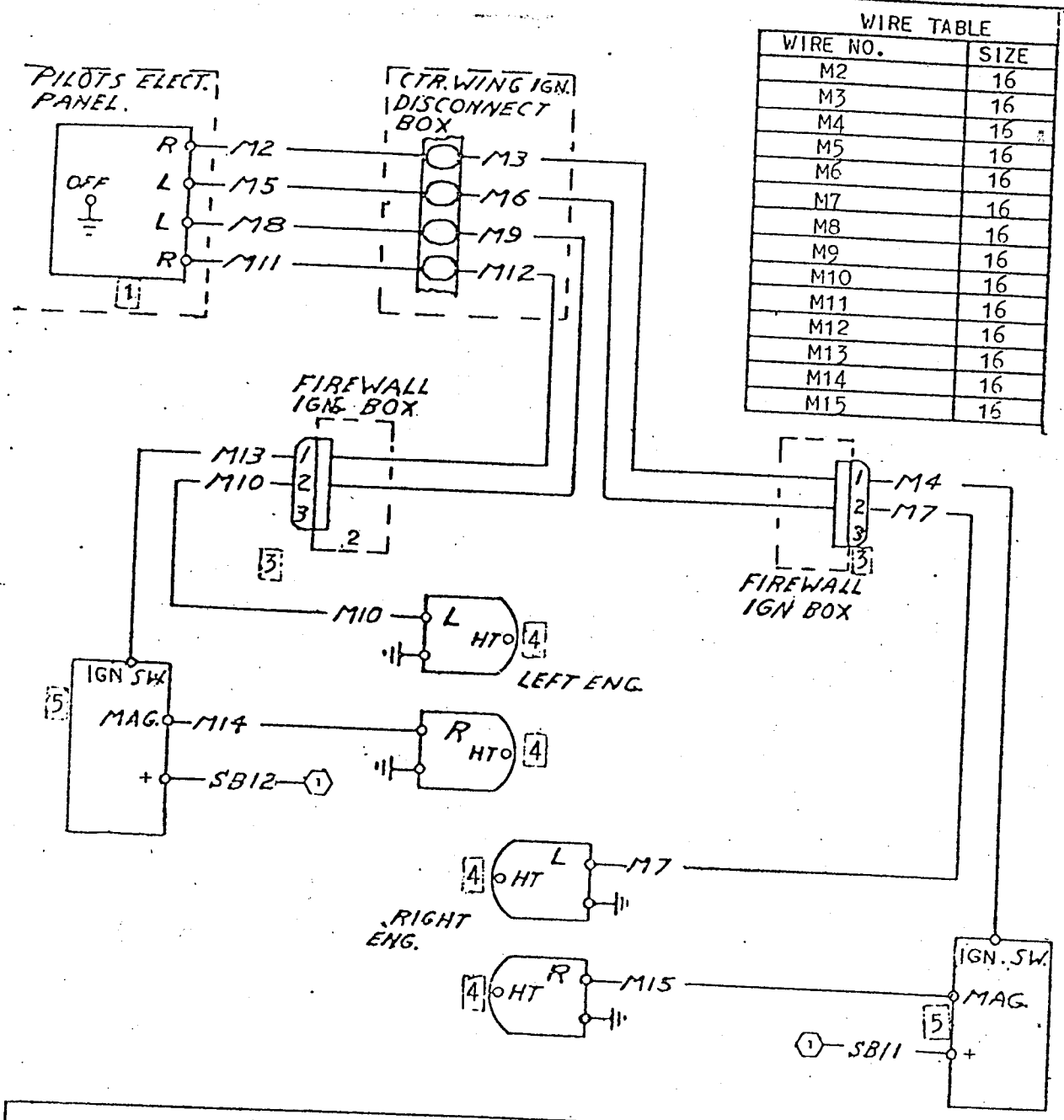

WIRE TABLE

WIRE NO.	SIZE
M2	16
M3	16
M4	16
M5	16
M6	16
M7	16
M8	16
M9	16
M10	16
M11	16
M12	16
M13	16
M14	16
M15	16

EQUIPMENT

ITEM NO.	DESCRIPTION	PART NUMBER
1	SWITCH-IGNITION	94-32428 TYPE B-6
2	RECEPTACLE	SK-L3-32SL (CANNON)
3	PLUG	SK-L3-21-3/8B (CANNON)
4	MAGNETO-	SF-14LU-7 (BOSCH)
	IGNITION	
5	VIBRATOR- INDUCTION	AN 4181-1 (VJS24A1)

NOTE:

(1) SEE STARTER INDUCTION VIBRATOR WIRING DIAGRAM.

REF 7483358:29.0

Figure 12-12. Ignition Circuit

31.115

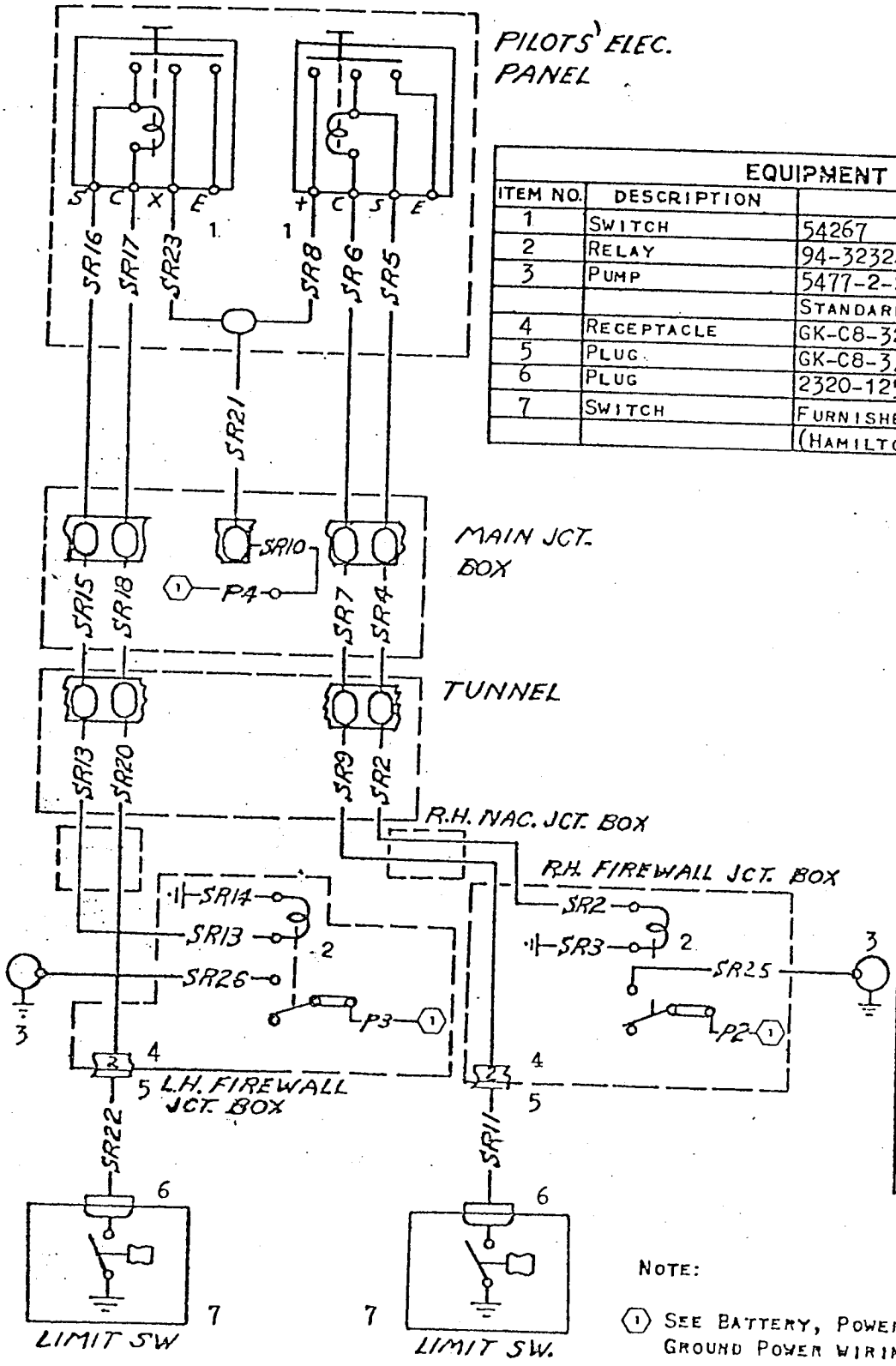

EQUIPMENT		
ITEM NO.	DESCRIPTION	PART NUMBER
1	SWITCH	54267
2	RELAY	94-32324-8 (B4)
3	PUMP	5477-2-21 (HAMILTON-STANDARD)
4	RECEPTACLE	GK-C8-32SL (CANNON)
5	PLUG	GK-C8-3/48 (CANNON)
6	PLUG	2320-125-45 (CANNON)
7	SWITCH	FURNISHED WITH PROPELLER (HAMILTON-STANDARD)

WIRE TABLE

WIRE NO.	SIZE
SR2	18
SR3	18
SR4	18
SR5	18
SR6	18
SR7	18
SR8	18
SR9	18
SR10	18
SR11	18
SR13	18
SR14	18
SR15	18
SR16	18
SR17	18
SR18	18
SR20	18
SR21	18
SR22	18
SR23	18
SR25	4
SR26	4

NOTE:

(1) SEE BATTERY, POWER FEEDS AND GROUND POWER WIRING DIAGRAM.

REF 5209957:18.0A

Figure 12-13. Propeller Feathering Pump Circuit

31.120

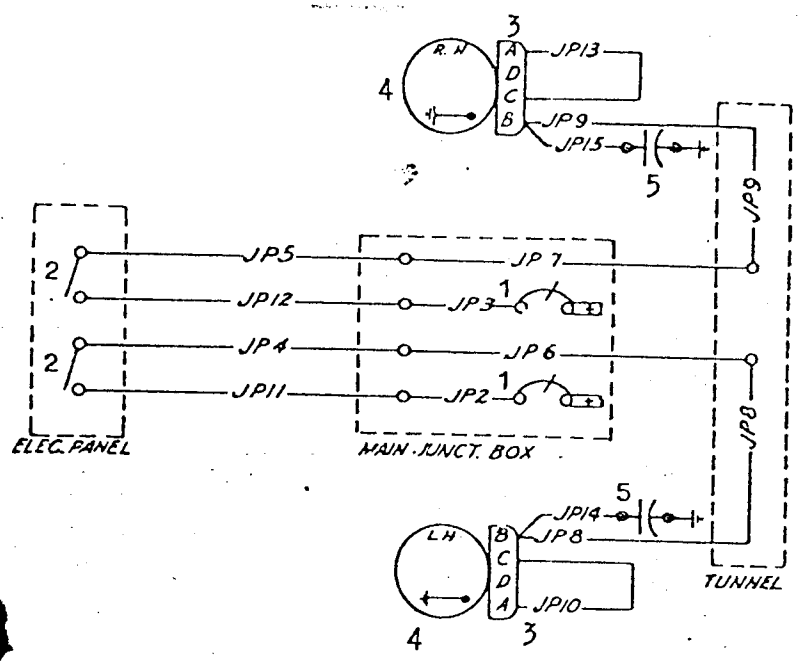

EQUIPMENT		
ITEM NO.	DESCRIPTION	PART NUMBER
1	CIRCUIT BREAKER	AN3160-20
2	SWITCH (MICRO)	AN3021-2 Co.)
3	PLUG	AN3106-18-4P
4	MOTOR	4949A (DELCO)
5	CAPACITOR	CA-275X (4MFD)

WIRE TABLE

WIRE NO.	SIZE
JP2	16
JP3	16
JP4	16
JP5	16
JP6	16
JP7	16
JP8	16
JP9	16
JP10	16
JP11	16
JP12	16
JP13	16
JP15	16
JP14	16

REF 7483358:25.0

Figure 12-14. Fuel Booster Pump

31.121

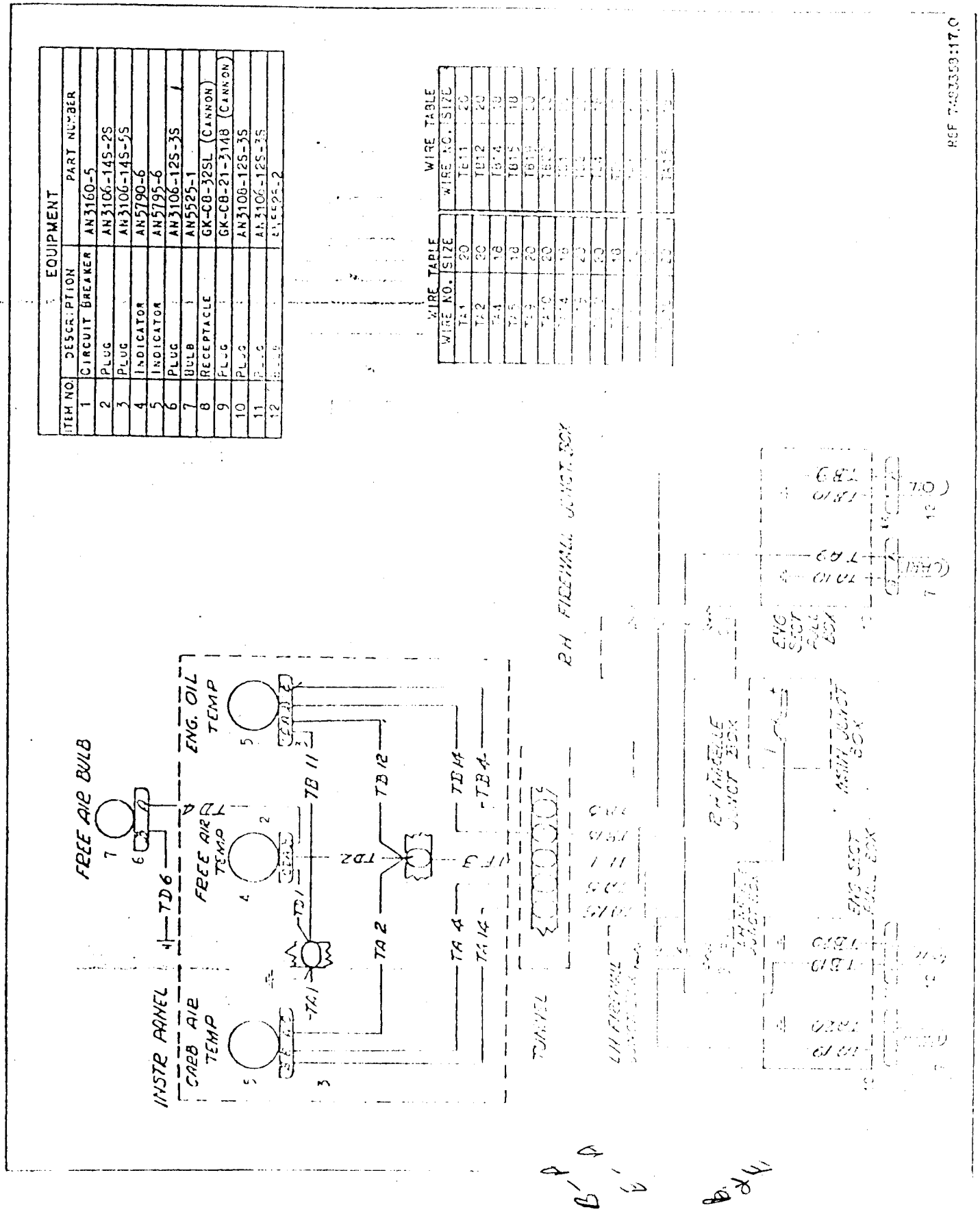

Figure 12-15. Carburetor Air Temperature, Oil Temperature, and Free Air Temperature Circuit

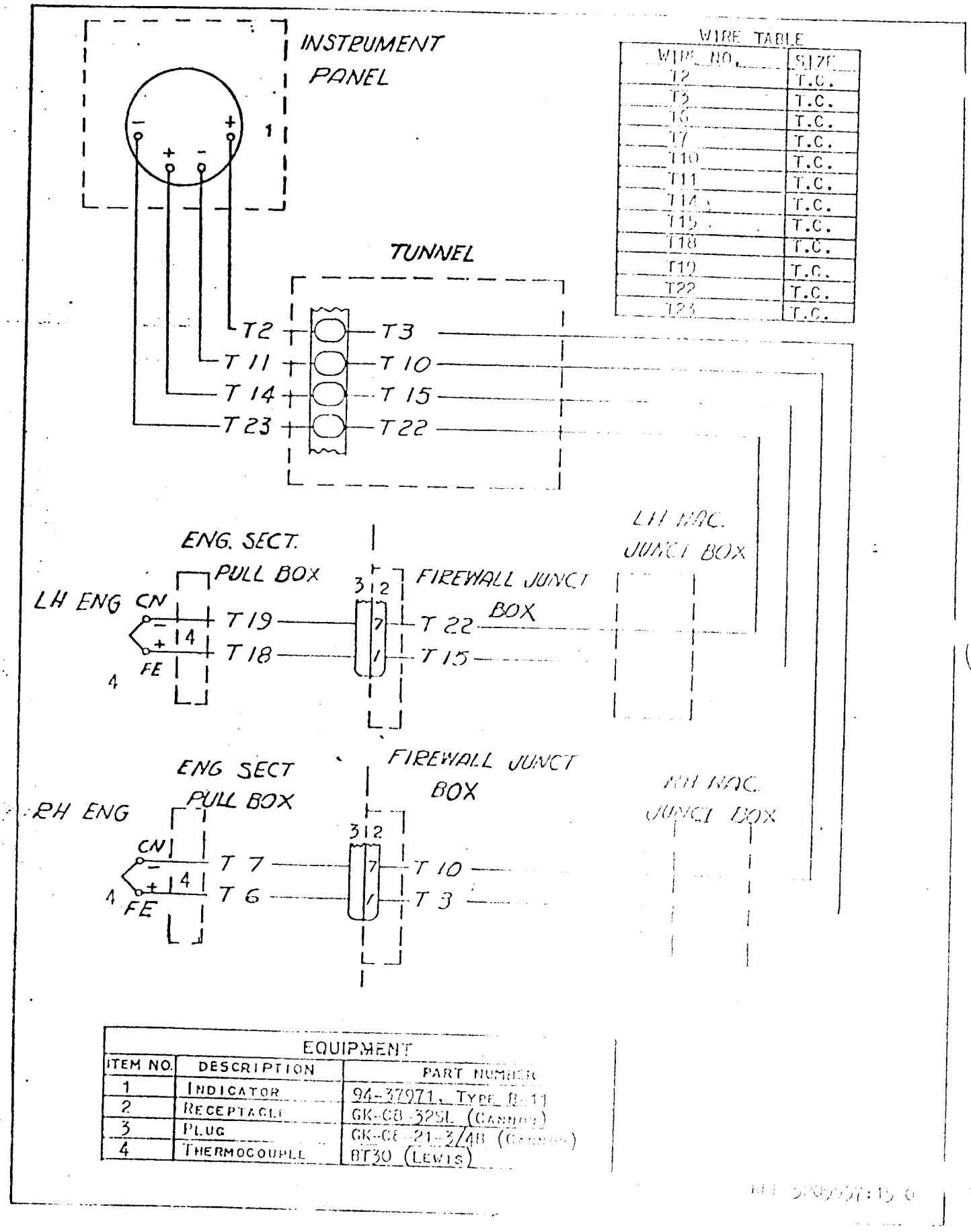

WIRE TABLE

WIRE NO.	SIZE
T2	T.C.
T3	T.C.
T6	T.C.
T7	T.C.
T10	T.C.
T11	T.C.
T14	T.C.
T15	T.C.
T18	T.C.
T19	T.C.
T22	T.C.
T23	T.C.

EQUIPMENT

ITEM NO.	DESCRIPTION	PART NUMBER
1	INDICATOR	94-37971, TYPE B-11
2	RECEPTACLE	GK-C8-32SL (CANNON)
3	PLUG	GK-C8-21-3/4B (CANNON)
4	THERMOCOUPLE	BT30 (LEWIS)

Figure 12-16. Engine Temperature Thermocouple Circuit

6.
Tx. B & E,
C & D

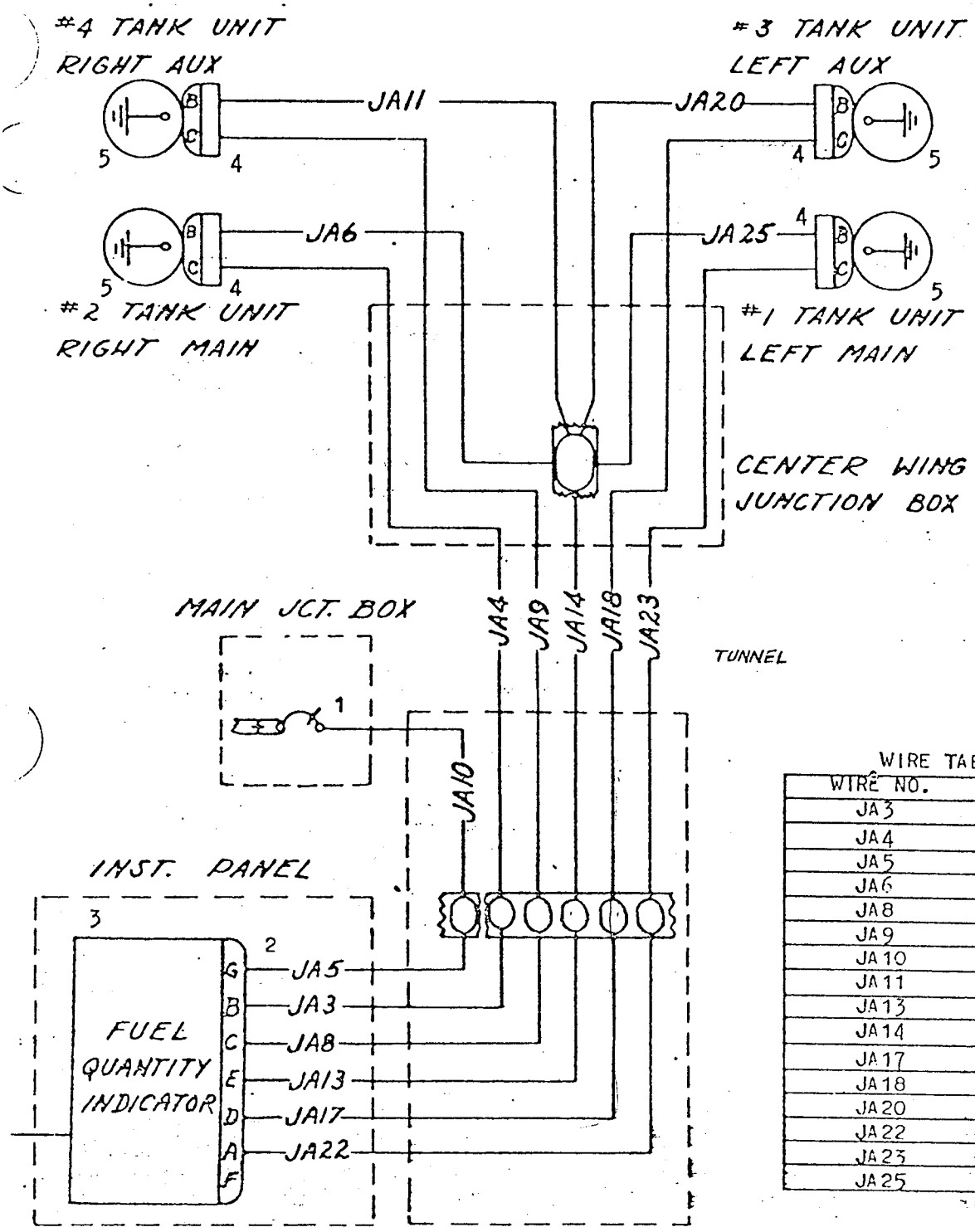

WIRE TABLE

WIRE NO.	SIZE
JA3	20
JA4	20
JA5	20
JA6	20
JA8	20
JA9	20
JA10	20
JA11	20
JA13	20
JA14	20
JA17	20
JA18	20
JA20	20
JA22	20
JA23	20
JA25	20

EQUIPMENT			EQUIPMENT		
ITEM NO.	DESCRIPTION	PART NUMBER	ITEM NO.	DESCRIPTION	PART NUMBER
1	CIRCUIT BREAKER	AN3160-5	4	PLUG	AN3106-14S-1S
2	PLUG	AN3106-16S-1S	5	TANK UNIT (FUEL QUANTITY)	EA-15 (LIQUIDOMETER)
3	INDICATOR (FUEL QUANTITY)	EA-48-5-24 (LIQUIDOMETER)			

REF 7483358:2F

31,124

Figure 12-17. Fuel Quantity Circuit

EQUIPMENT		
ITEM NO.	DESCRIPTION	PART NUMBER
1	SWITCH	11TS1-21 (MICRO-SWITCH Co.)
2	CIRCUIT BREAKER	AN3160-10
3	HEATER-PITOT	AC94-27874-A (D-2)

WIRE TABLE

WIRE NO.	SIZE
DH1	14
DH2	14
DH3	14
DH4	14
DH5	14
DH6	14
DH7	14
DH8	14
DH9	14
DH10	14
DH11	14
DH12	14

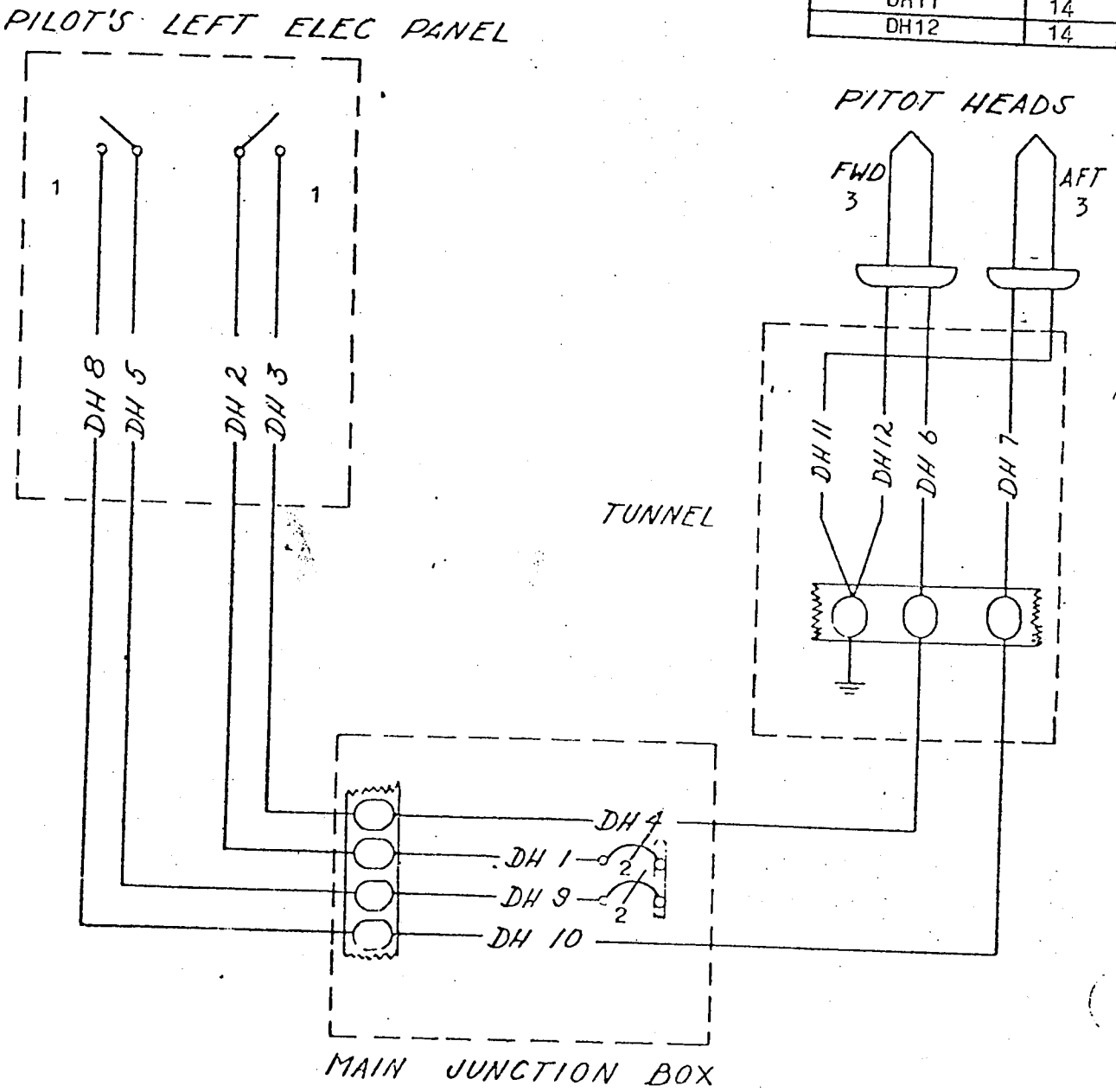

REF 5809957:44

Figure 12-18. Pitot Heater Circuit

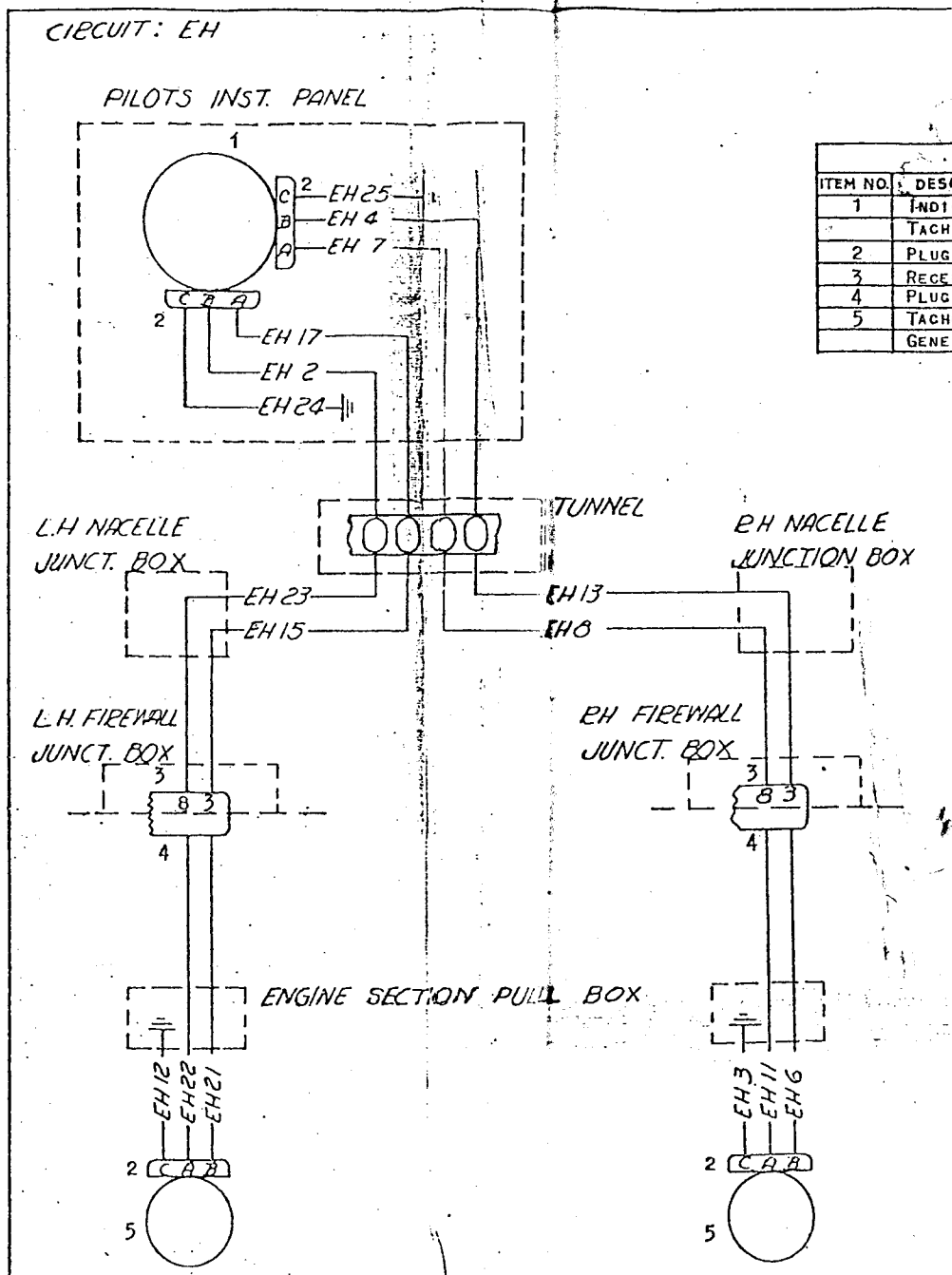

EQUIPMENT		
ITEM NO.	DESCRIPTION	PART NUMBER
1	INDICATOR-TACHOMETER	94-27355 TYPE E-14
2	PLUG	AN3106-14S-1S
3	RECEPTACLE	GK-C8-32SL (CANNON)
4	PLUG	GK-C8-21-3/4B (CANNON)
5	TACHOMETER-GENERATOR	94-27355 TYPE E-14

WIRE TABLE

WIRE NO.	SIZE
EH 2	18
EH 3	18
EH 4	18
EH 6	18
EH 7	18
EH 8	18
EH 11	18
EH 12	18
EH 13	18
EH 15	18
EH 17	18
EH 21	18
EH 22	18
EH 23	18
EH 24	18
EH 25	18

REF 5209957:1340

Figure 12-19. Tachometer Circuit

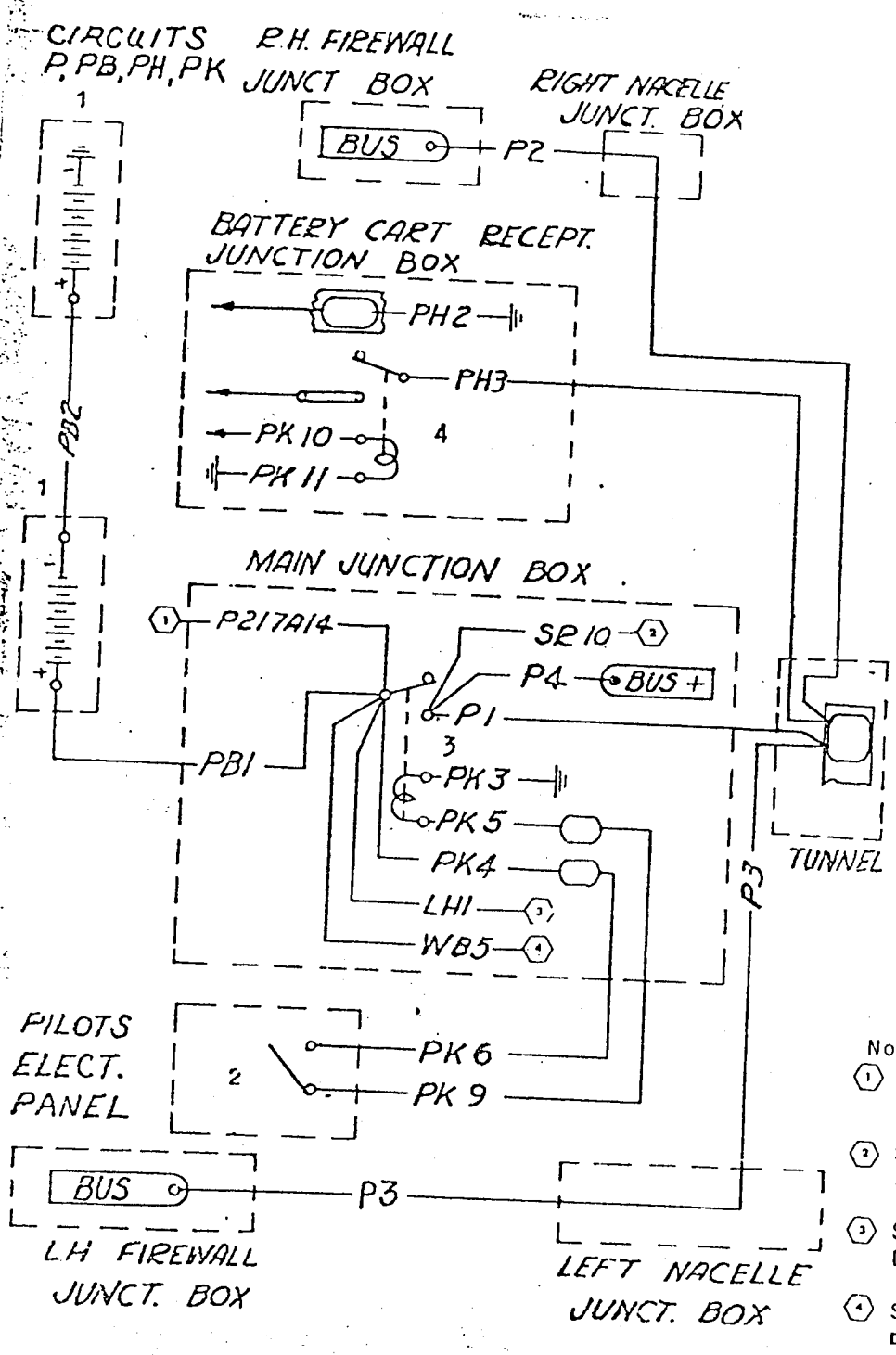

WIRE TABLE

WIRE NO.	SIZE
P1	00
P2	00
P4	00
PB1	00
PB2	00
PH2	00
PH3	00
PK4	18
PK5	18
PK6	18
PK9	18
PK10	18
PK11	18
PK3	18
P3	00

NOTES:

1. SEE RADIO POWER FEEDS AND INVERTER WIRING DIAGRAM.
2. SEE PROPELLER FEATHERING PUMP WIRING DIAGRAM.
3. SEE CABIN AND COMPARTMENT DOME LIGHT WIRING DIAGRAM.
4. SEE BAIL-OUT SIGNAL WIRING DIAGRAM.

EQUIPMENT

ITEM NO.	DESCRIPTION	PART NUMBER
1	BATTERY	88AH (EXIDE)
2	SWITCH	11TS1-21 (MICRO-SWITCH CO.)
3	RELAY	94-32324-A (B4)
4	RELAY	7220-24 (LEACH)

REF 520957:10.0A

Figure 12-20. Battery, Power Feeds, and Ground Power Circuit

31,127

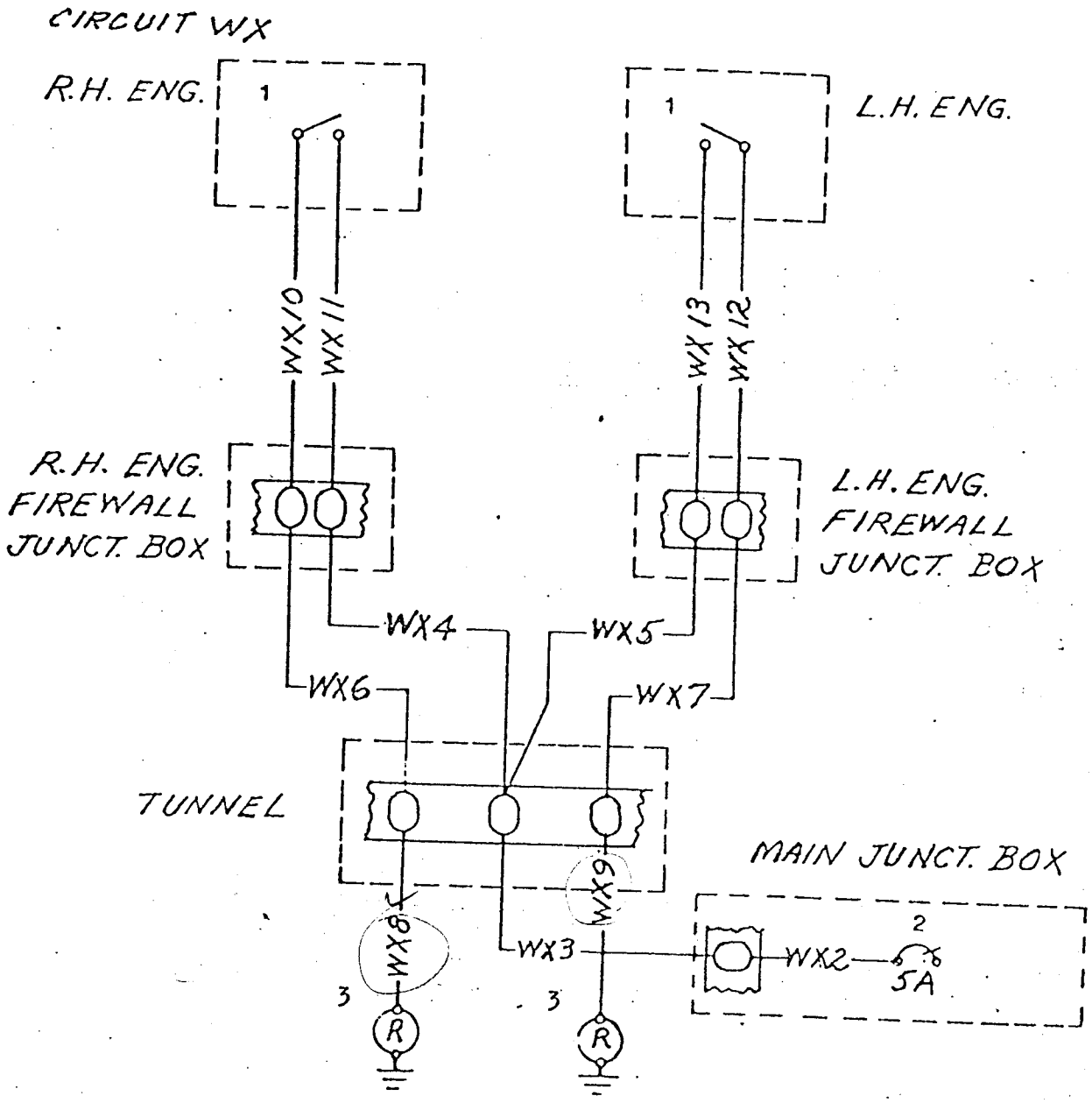

WIRE TABLE

WIRE NO.	SIZE
WX2	18
WX3	18
WX4	18
WX5	18
WX6	18
WX7	18
WX8	18
WX9	18
WX10	18
WX11	18
WX12	18
WX13	18

EQUIPMENT

ITEM NO.	DESCRIPTION	PART NUMBER
1	SWITCH	ES-4 MODEL "D" (EXHIBIT SUPPLY)
2	CIRCUIT BREAKER	AN3160-5
3	LIGHT	4283593-1

REF 5209957:50.0

Figure 12-21. Blower Warning Circuit

31,128

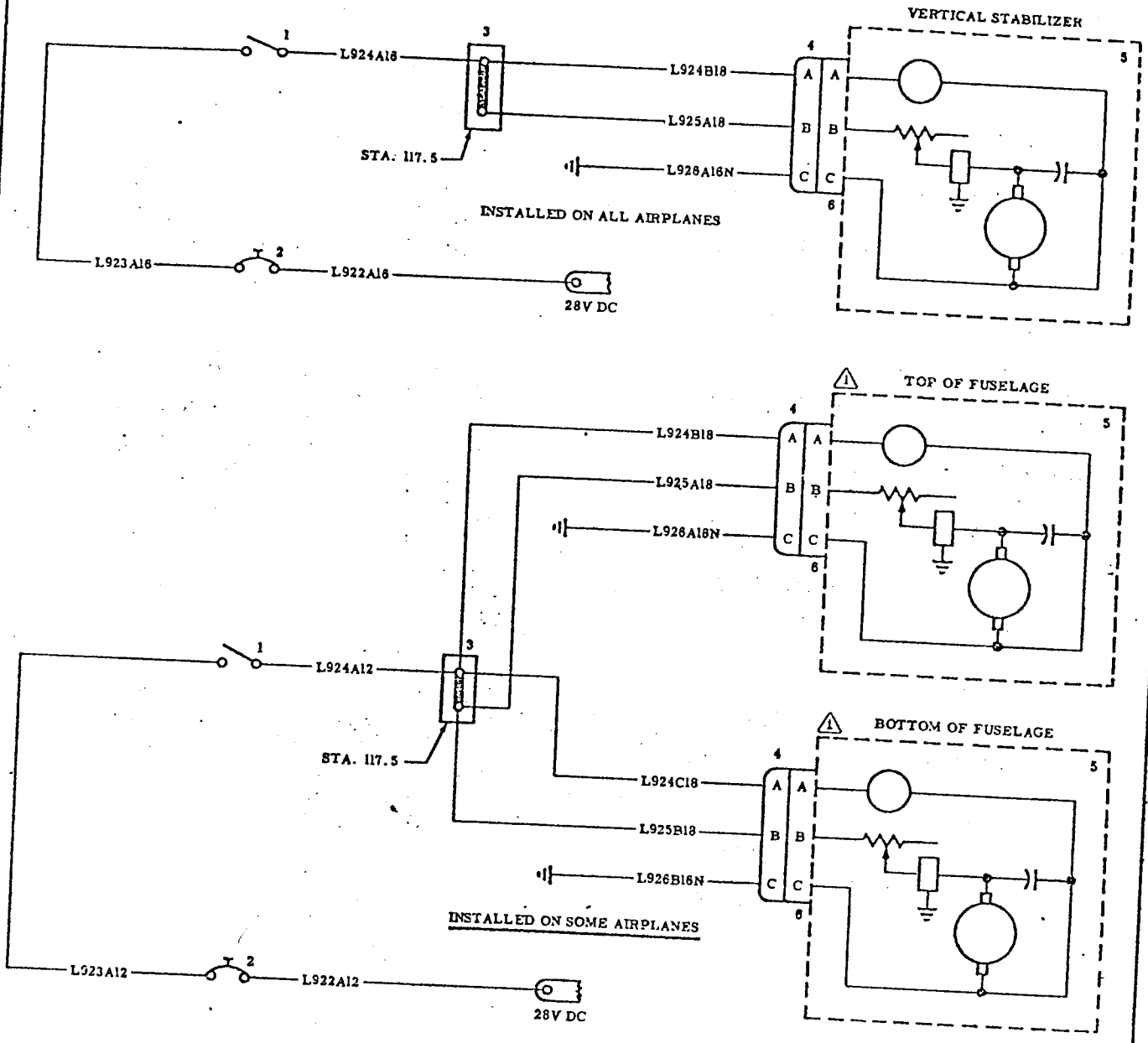

ITEM	DESCRIPTION	PART NO.
1	SWITCH	AN3022-2
2	CIRCUIT BREAKER	MS25017-10
3	TERMINAL STRIP	AN3436-2-2( ) AN3433-2-2
4	PLUG	AN3106A-105L-3S
5	LIGHT ASSEMBLY	GRIMES G6985-8
6	RECEPTACLE	AN3106A-10SL-3S

Notes:

1. These lights shall be installed in conjunction with the vertical stabilizer anticollision light on some airplanes at the discretion of the base commander.

Figure 12-22. Anticollision Light (Red Rotating Beacon)

40.275

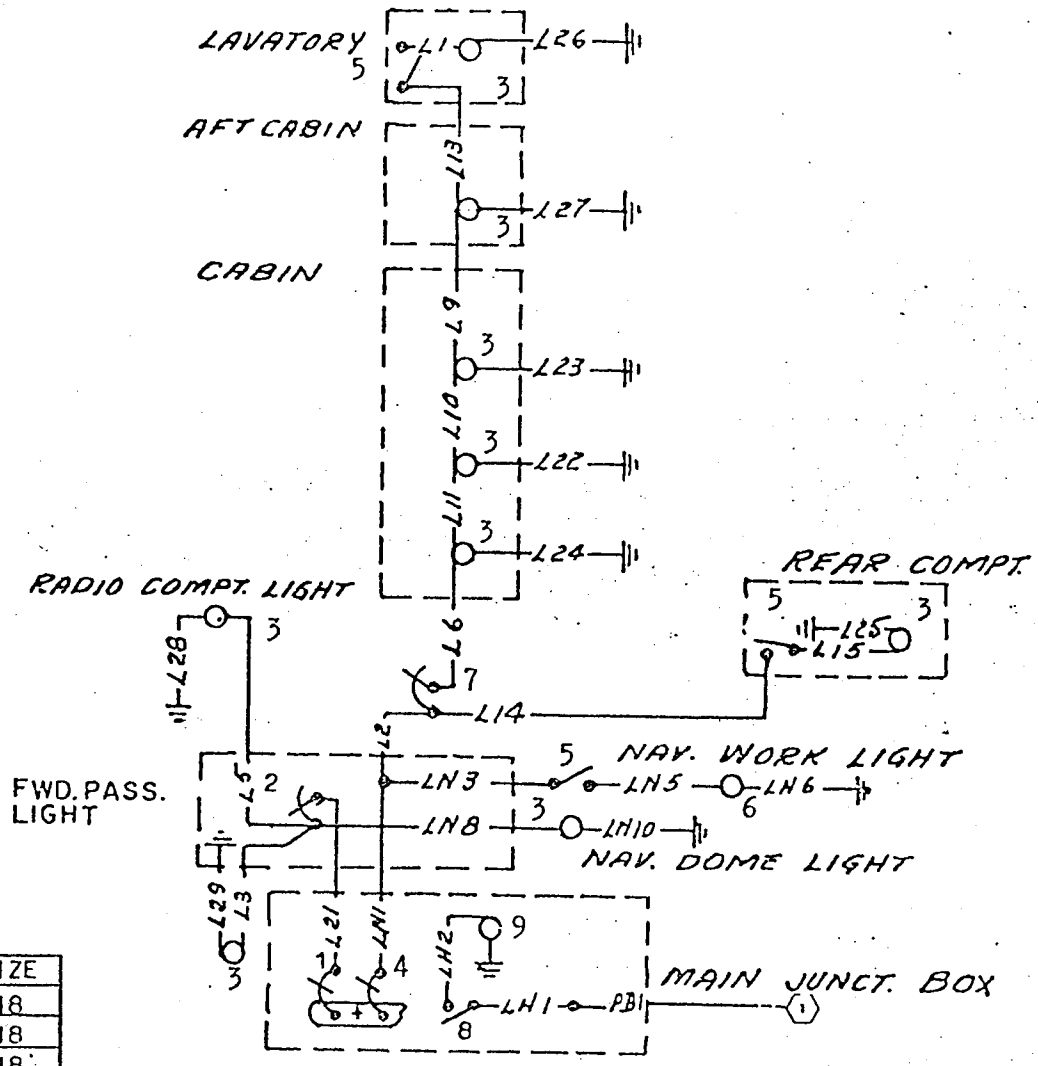

WIRE TABLE

WIRE NO.	SIZE
LH1	18
LH2	18
LN1	18
LN3	18
LN5	18
LN6	18
LN8	18
L21	18
LN10	18
L1	18
L2	18
L3	18
L5	18
L6	18
L9	18
L10	18
L11	18
L23	18
L13	18
L14	18
L15	18
L24	18
L22	18

EQUIPMENT

ITEM NO.	DESCRIPTION	PART NUMBER
1	CIRCUIT BREAKER	AN3160-5
2	RHEOSTAT	MODEL "K" 352 (OHMITE)
3	LIGHT	HD 1001 (GEM CITY)
4	CIRCUIT BREAKER	AN3160-10
5	SWITCH	8201 (CUTLER-HAMMER)
6	LIGHT	AC 32372 TYPE A-11
7	RHEOSTAT	MODEL "L" 352 (OHMITE)
8	SWITCH	8401 (CUTLER-HAMMER)
9	LIGHT	SCF-D-O (CANNON)

NOTE:

(1) SEE BATTERY, POWER FEEDS, AND GROUND POWER WIRING DIAGRAM.

REF 5209957:57.0

Figure 12-23. Cabin and Compartment Dome Lights Circuit (C-47 Series Only)

31,129

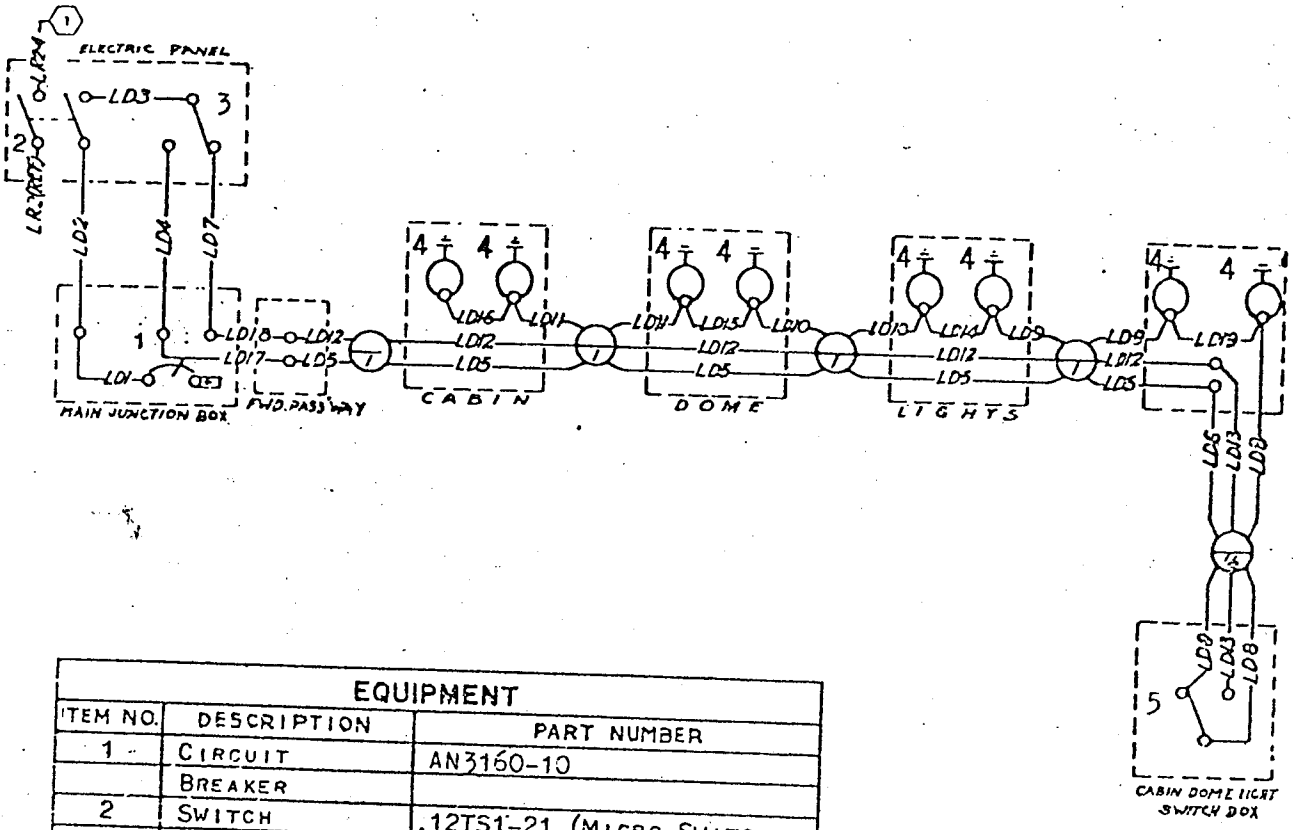

EQUIPMENT		
ITEM NO.	DESCRIPTION	PART NUMBER
1	CIRCUIT BREAKER	AN3160-10
2	SWITCH	.12TS1-21 (MICRO-SWITCH Co.)
3	SWITCH	AN3021-3
4	LIGHT	SCF-D8-0 (CANNON)
5	SWITCH	8210 (CUTLER-HAMMER)

NOTE:

(1) SEE READING LIGHTS WIRING DIAGRAM.

REF 7483358:15.0A

Figure 12-24. Cabin Dome Lights Circuit (C-117 Series Only)

31,130

WIRE TABLE

WIRE NO.	SIZE
LA1	18
LA4	18
LA5	18
LA6	18
LA7	18
LA8	18
LA2	18
LA11	18
LA9 & LA10 ARE FURNISHED WITH LIGHT	

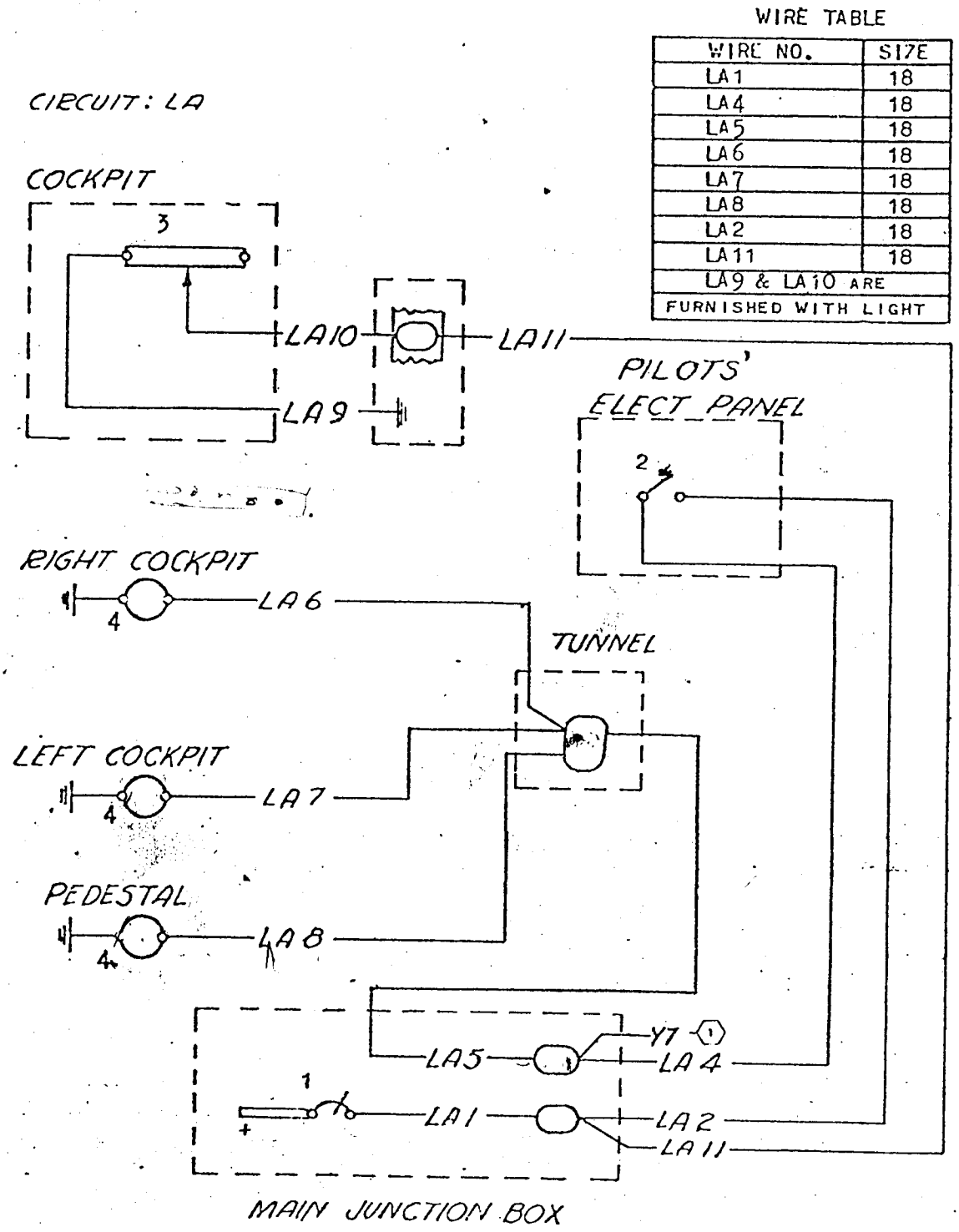

EQUIPMENT		
ITEM NO.	DESCRIPTION	PART NUMBER
1	CIRCUIT BREAKER	AN3160-5 (5 AMP.)
2	SWITCH	11TS1-21 (MICRO SWITCH CO.)
3	LIGHT	AC94-52294A (C-424V)
4	LIGHT	2130136 (DOUGLAS)

NOTE:

(1) SEE PANEL, COMPASS AND INSTRUMENT LIGHTS WIRING DIAGRAM.

REF 5209957:46.08

31,131

Figure 12-25. Cockpit Lighting Circuit (C-47 Series Only)

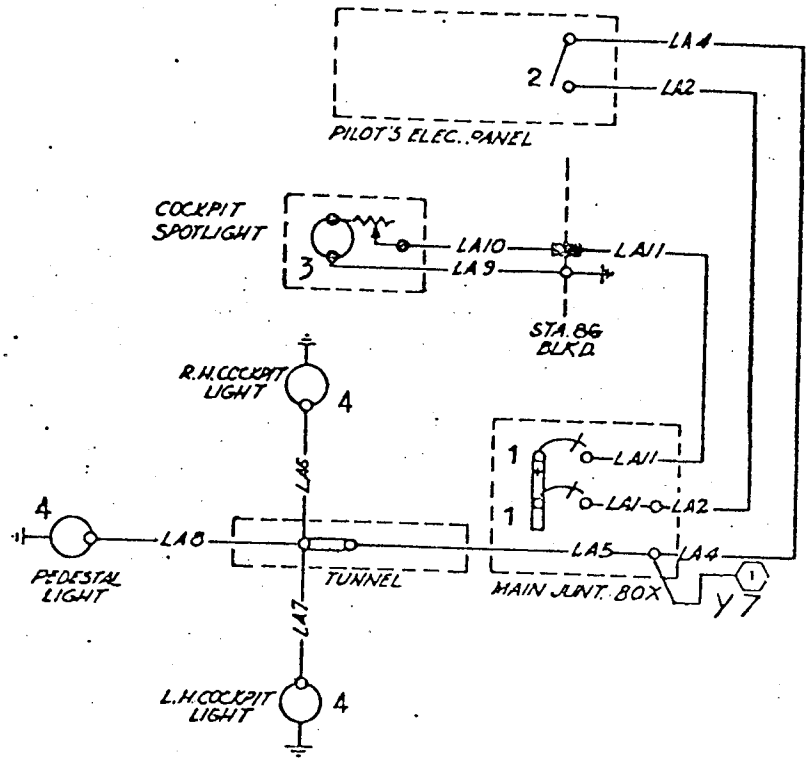

EQUIPMENT		
ITEM NO.	DESCRIPTION	PART NUMBER
1	CIRCUIT BREAKER	AN3160-5
2	SWITCH	11TS1-21 (MICRO-SWITCH
		Co.)
3	LIGHT	AC-94-32294-A (C-424V)
4	LIGHT	2130136 (DOUGLAS)

WIRE TABLE

WIRE NO.	SIZE
LA1	18
LA2	18
LA4	18
LA6	18
LA7	18
LA8	18
LA11	18
LA5	18
LA 9 & 10 ARE	
FURNISHED WITH	
THE LIGHT	

NOTE:

(1) SEE PANEL, COMPASS AND INSTRUMENT LIGHT WIRING DIAGRAM.

REF 7483358:20.0E

31,132

Figure 12-26. Cockpit Lighting Circuit (C-117 Series Only)

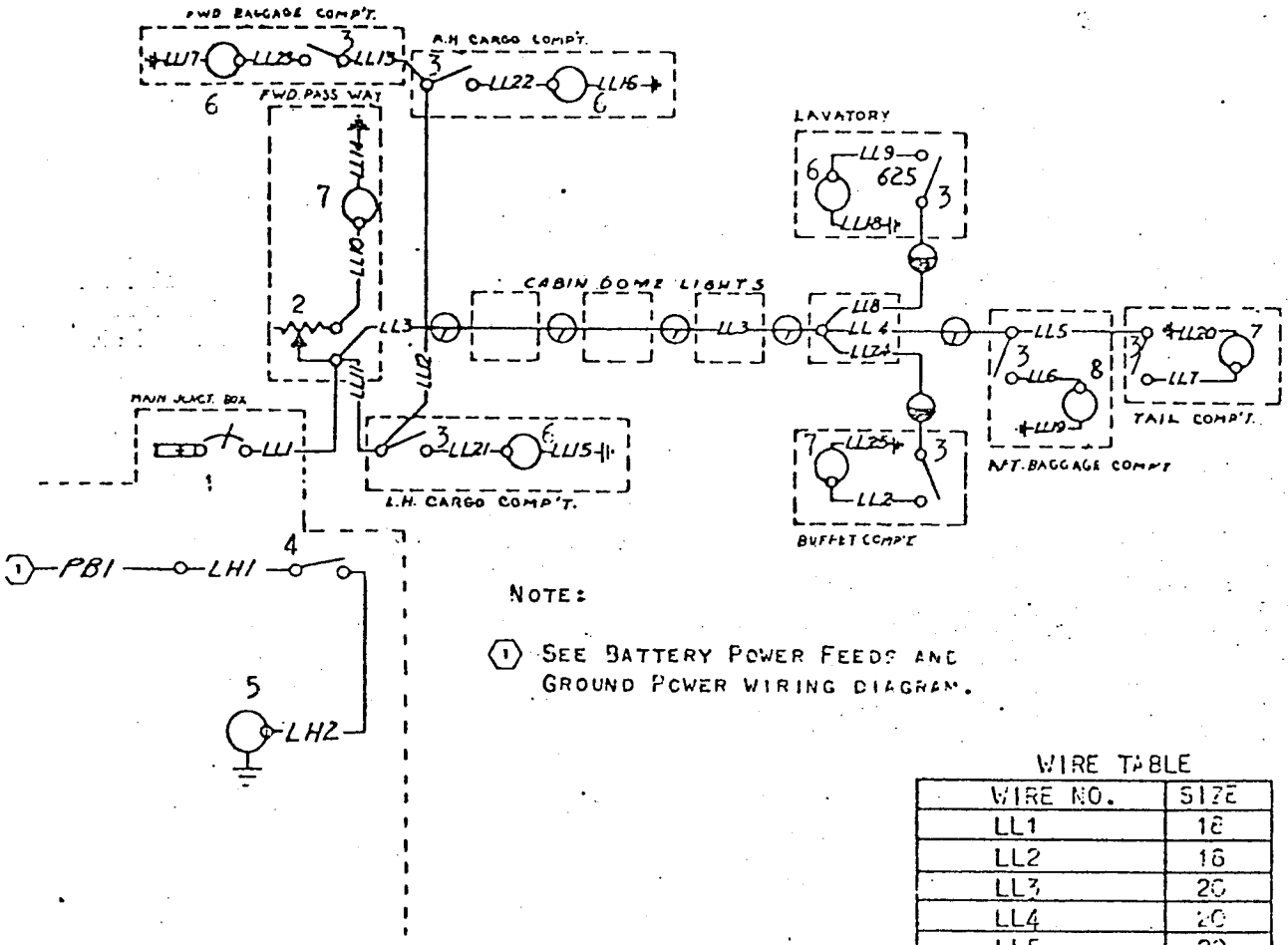

NOTE:

(1) SEE BATTERY POWER FEEDS AND GROUND POWER WIRING DIAGRAM.

WIRE TABLE

WIRE NO.	SIZE
LL1	18
LL2	18
LL3	20
LL4	20
LL5	20
LL6	20
LL7	20
LL8	20
LL9	20
LL10	20
LL11	20
LL12	20
LL13	20
LL14	20
LL15	20
LL16	20
LL17	20
LL18	20
LL19	20
LL20	20
LL21	20
LL22	20
LL23	20
LL24	20
LL25	20
LH1	18
LH2	18

EQUIPMENT		
ITEM NO.	DESCRIPTION	PART NUMBER
1	CIRCUIT BREAKER	AN3160-10
2	RHEOSTAT	NAF 1099-100-25
3	SWITCH	8201 (CUTLER-HAMMER)
4	SWITCH	8410 (CUTLER HAMMER)
5	LIGHT	SCF-D-0 (CANNON)
6	LIGHT	DOU-20 (ROSEN)
7	LIGHT	HD-1001 (GEM CITY)
8	LIGHT	DOU-21 (ROSEN)

REF 7433359:19.0A

31,133

Figure 12-27. Compartment Lights Circuit (C-117 Series Only)

CIRCUIT: WD

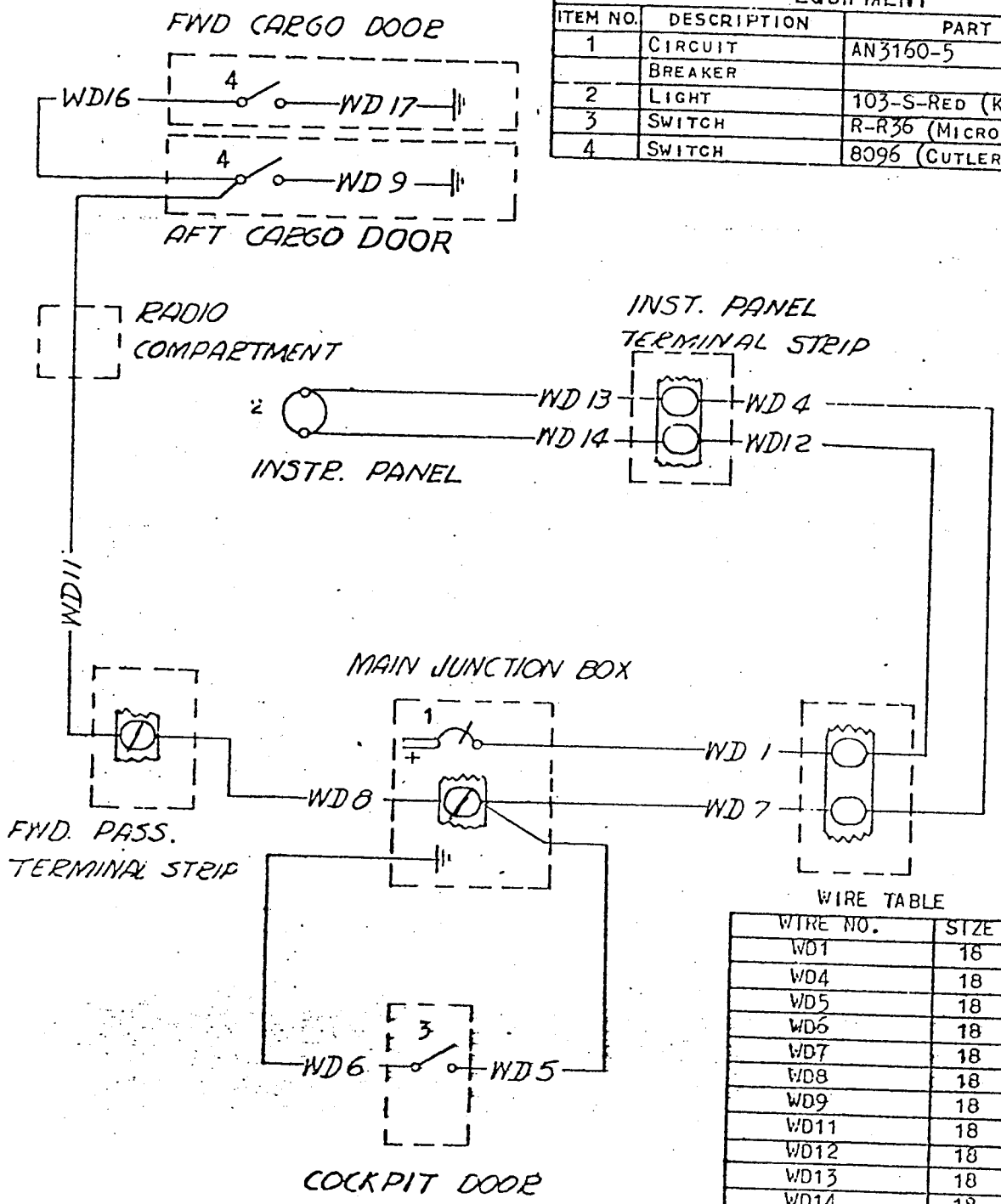

EQUIPMENT		
ITEM NO.	DESCRIPTION	PART NUMBER
1	CIRCUIT BREAKER	AN3160-5
2	LIGHT	103-S-RED (KORRY)
3	SWITCH	R-R36 (MICRO-SWITCH CO)
4	SWITCH	8096 (CUTLER-HAMMER)

WIRE TABLE

WIRE NO.	SIZE
WD1	18
WD4	18
WD5	18
WD6	18
WD7	18
WD8	18
WD9	18
WD11	18
WD12	18
WD13	18
WD14	18
WD16	18
WD17	18

REF 5209957:23.0

Figure 12-28. Door Open Warning Signal Circuit (C-47 Series Only)

31,134

Key to Figure 12-32

Item	Nomenclature
39.	Generator (P-1)
40.	Left Engine Nacelle
41.	Connector (FWF-M3-23-1B)
42.	Connector (FWF-DM3-32SL-1)
43.	Bottom Terminal Board, Tunnel Aft Connector Panel
44.	Generator Field Control Relay (M-2)
45.	Connector (AN3108-24-7S)
46.	*Generator Overvoltage Relay (E2 or RYU-1/A)
48.	Terminal Board Relay Panel
49.	[illegible] Regulator
50.	Main Bus
51.	Main Electrical Junction Box
52.	Reverse Current Relay (A-700A)
53.	Voltmeter Selector Switch (AN3211-1)
54.	Generator Failure Relay (AN3211-1)
55.	Voltmeter (AN3203V30)
56.	Left Generator Failure Warning Light
57.	Copilot's Electrical Panel
58.	Loadmeter (C-1)
59.	Generator Equalizer Resistor (1016-C-44B9004-2)
60.	Bus (54B131107-1)
61.	Right Generator Failure Warning Circuit Breaker
62.	Left Generator Control Switch (AN3227-5)
63.	Right Generator Control Switch (AN3227-5)
64.	Power Systems Control Panel
65.	Left Generator Circuit Breakers
103.	Generator Control Relay Panel

*All overvoltage relays must be of the same type (E2 or RYU-1/A).

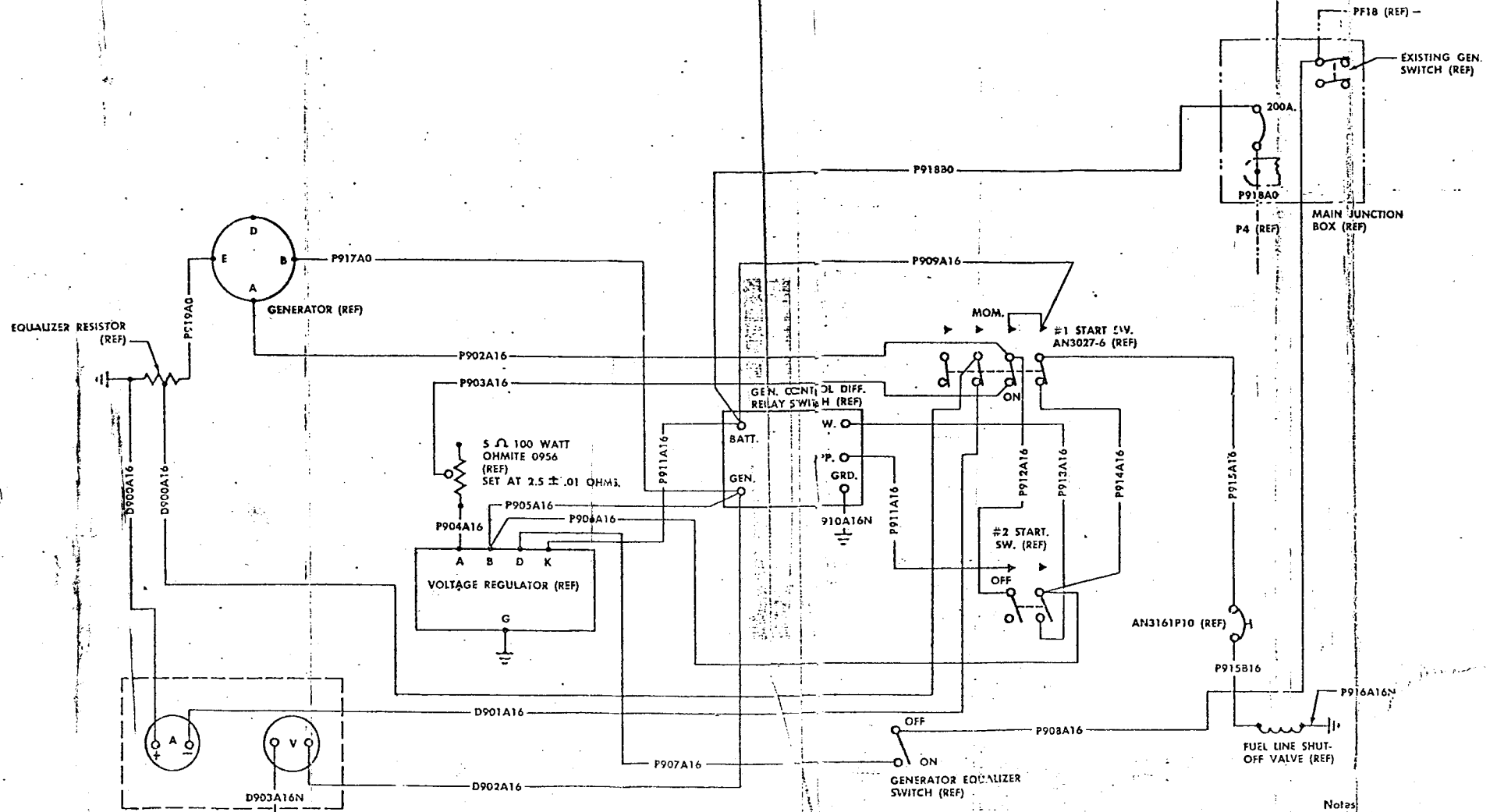

Notes:

1. Cable spec. AN-J-C-48
   Use terminals AN659-18 8 req'd
   AN659-4 44 req'd
2. This wiring diagram use with installation 49K7056 (Ref.)
3. Installed on some airplanes.

Figure 12-33. Accessory Power Plant

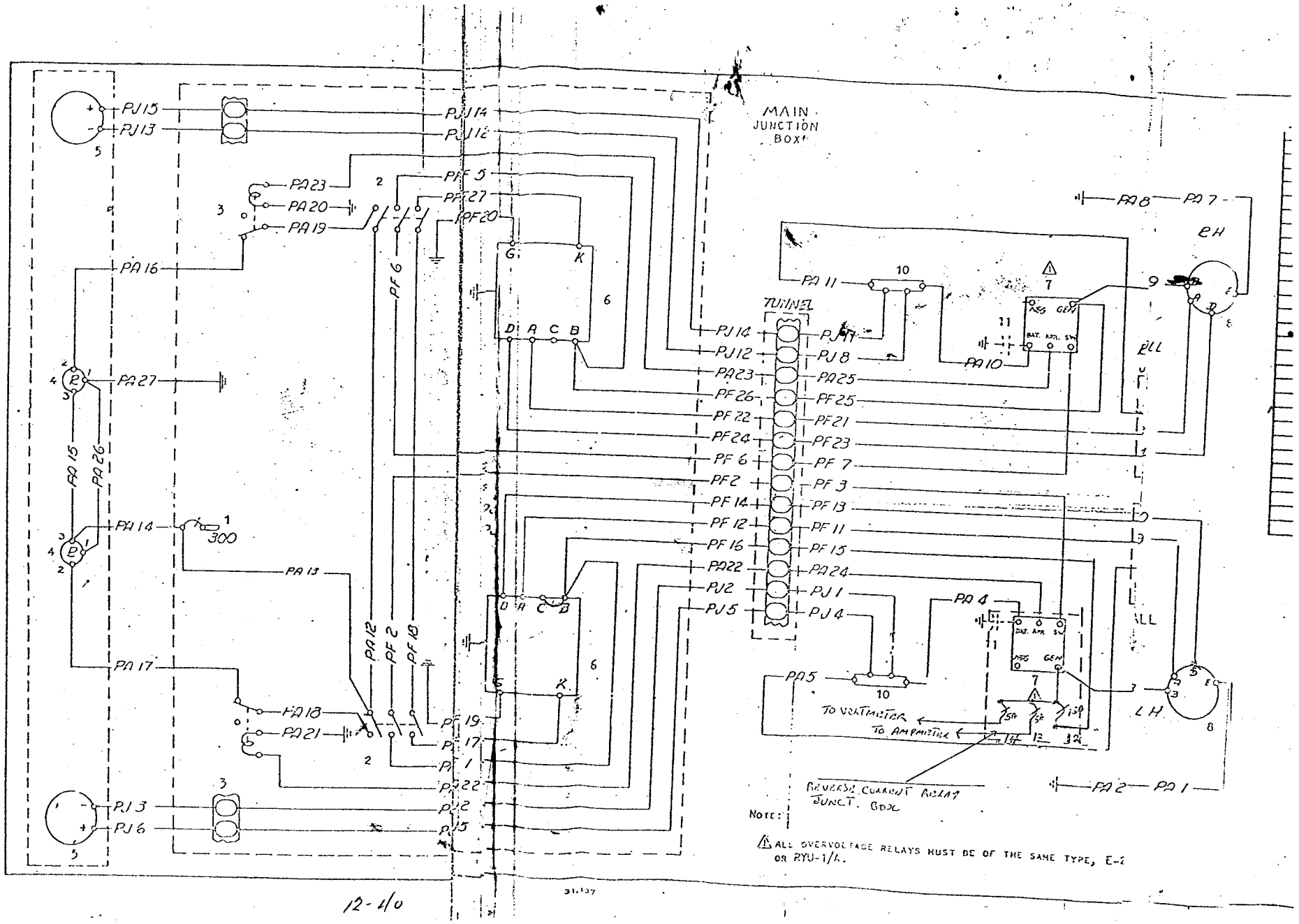
MAIN JUNCTION BOX
TUNNEL
PJ15
PJ13
PJ14
PJ12
PA23
PA20
PA19
PF5
PF27
PF20
PA16
PF6
PA27
PA15
PA26
PA14
300
PA13
PA17
PA12
PF2
PF18
PA18
PA21
PF19
PF17
PF1
PA22
PJ2
PJ5
PJ3
PJ6
PA11
PA10
PA8
PA7
EH
ELL
PJ11
PJ8
PA25
PF25
PF21
PF23
PF7
PF3
PF13
PF11
PF15
PA24
PJ1
PJ4
PA4
PA5
LH
PA2
PA1
TO VOLTMETER
TO AMPMETER
REVERSE CURRENT RELAY JUNCT. BOX
NOTE:
ALL OVERVOLTAGE RELAYS MUST BE OF THE SAME TYPE, E-2 OR RYU-1/A.
31.137

12-40

WIRE TABLE

WIRE NO.	SIZE
PF3	18
PF4	18
PF5	18
PF6	18
PF7	18
PF8	14
PF9	14
PF10	16
PF11	14
PF12	14
PF13	16
PF14	16
PF15	14
PF16	14
PF17	16
PF18	16
PF19	18
PF20	18
PF21	14
PF22	14
PF23	16
PF24	16
PF25	14
PF26	14
PF27	16
PJ1	16
PJ2	16
PJ3	16

WIRE TABLE

WIRE NO.	SIZE
PA1	2
PA2	2
PA3	2
PA4	2
PA5	2
PA7	2
PA8	2
PA9	2
PA10	2
PA11	2
PA12	20
PA13	20
PA14	20
PA15	20
PA16	20
PA17	20
PA18	20
PA19	20
PA20	20
PA21	20
PA22	20
PA23	20
PA24	20
PA25	20
PA26	20
PA27	20
PF1	18
PF2	18

WIRE TABLE

WIRE NO.	SIZE
PJ4	16
PJ6	16
PJ8	16
PJ11	16
PJ12	16
PJ13	16
PJ14	16
PJ15	16

EQUIPMENT

ITEM NO.	DESCRIPTION	PART NUMBER
1	CIRCUIT BREAKER	AN3160-5
2	SWITCH	AN3226-2
3	RELAY	AN3314-1
4	LIGHT	AN3157-6
5	AMMETER	94-32204 (F-1)
6	REGULATOR	94-32276-4
7	RELAY	TYPE E-2 OR RYU-1/A
8	GENERATOR	95-32274 (0-1)
9	RESISTOR	AV01051 (AVIA)
10	SHUNT	AC94-32204
11	CAPACITOR	CA-27X
12	CIRCUIT BREAKER	— FIELD OR CKT SERIES
13	" "	— AMMETER
14	" "	— VOLTMETER

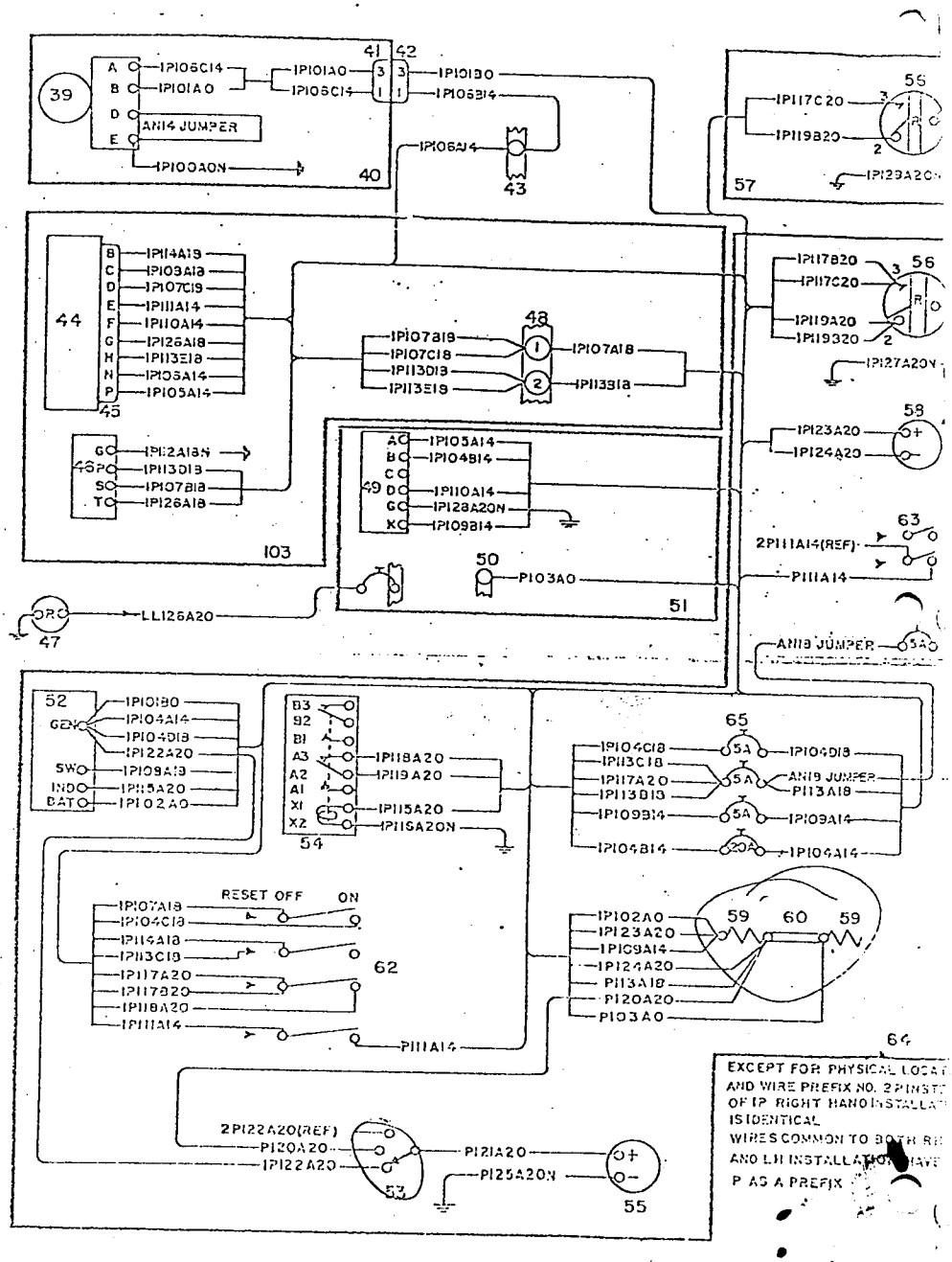

Figure 12-32. Generator Wiring Circuit (Airplanes with Bus Priority System)

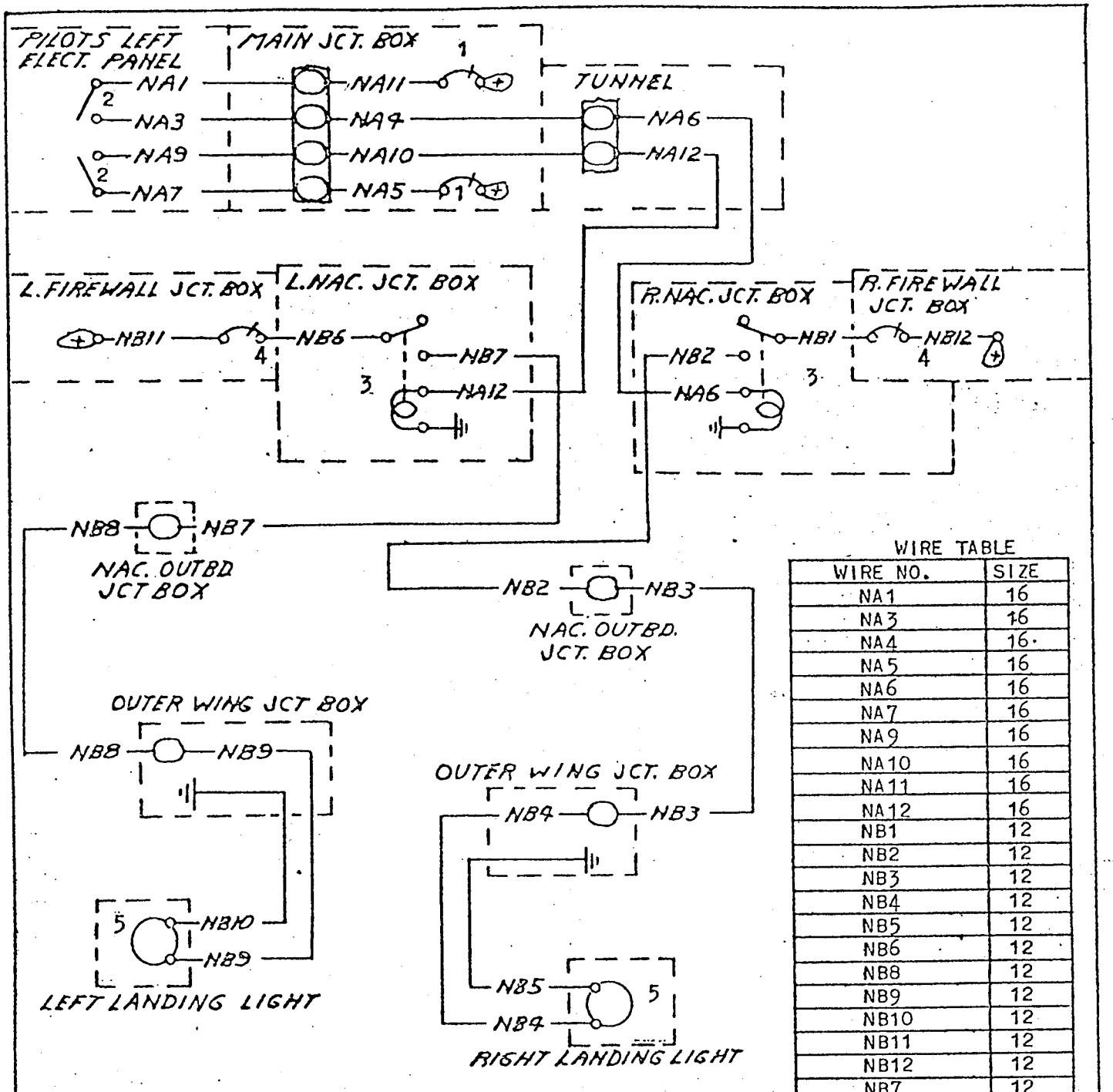

WIRE TABLE

WIRE NO.	SIZE
NA1	16
NA3	16
NA4	16
NA5	16
NA6	16
NA7	16
NA9	16
NA10	16
NA11	16
NA12	16
NB1	12
NB2	12
NB3	12
NB4	12
NB5	12
NB6	12
NB8	12
NB9	12
NB10	12
NB11	12
NB12	12
NB7	12

EQUIPMENT

ITEM NO.	DESCRIPTION	PART NUMBER
1	CIRCUIT	AN3160-5
	BREAKER	
2	SWITCH	11TS1-21 (MICRO-SWITCH
		CO.)
3	RELAY	5055 (LEACH)
4	CIRCUIT	AN3160-35
	BREAKER	
5	LIGHT	PAR-64

REF 7483358:30.0A

31,138

Figure 12-34. Landing Lights Circuit

WIRE TABLE

WIRE NO.	SIZE
BW1	20
BW2	20
BW3	20
BW4	20
BW5	20
BW6	20
BW7	20
BW8	20
BW9	20
BW10	20
BW11	20
BW12	20

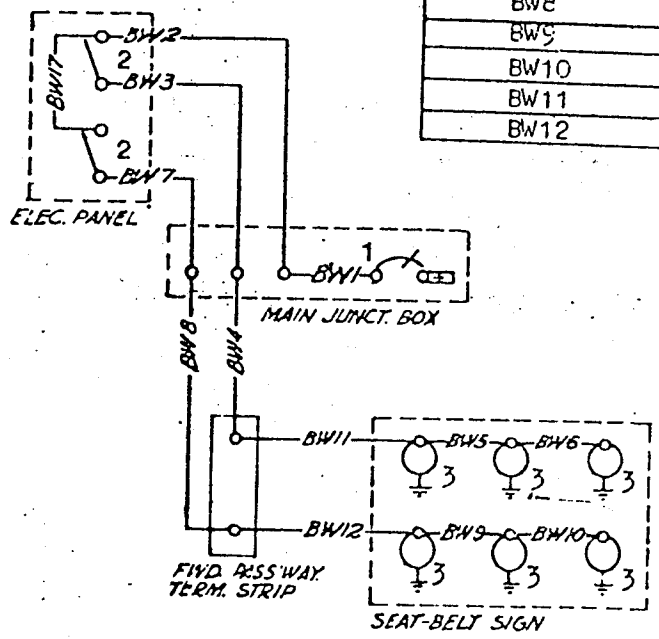

EQUIPMENT		
ITEM NO.	DESCRIPTION	PART NUMBER
1	CIRCUIT BREAKER	AN3160-5
2	SWITCH	11TS1-21 (MICRO SWITCH Co.)
3	LIGHT	SCF-DB-C (CANNON)

REF 7483358:33.0A

31,139

Figure 12-35. Passenger Warning Sign Circuit (C-117 Series Only)

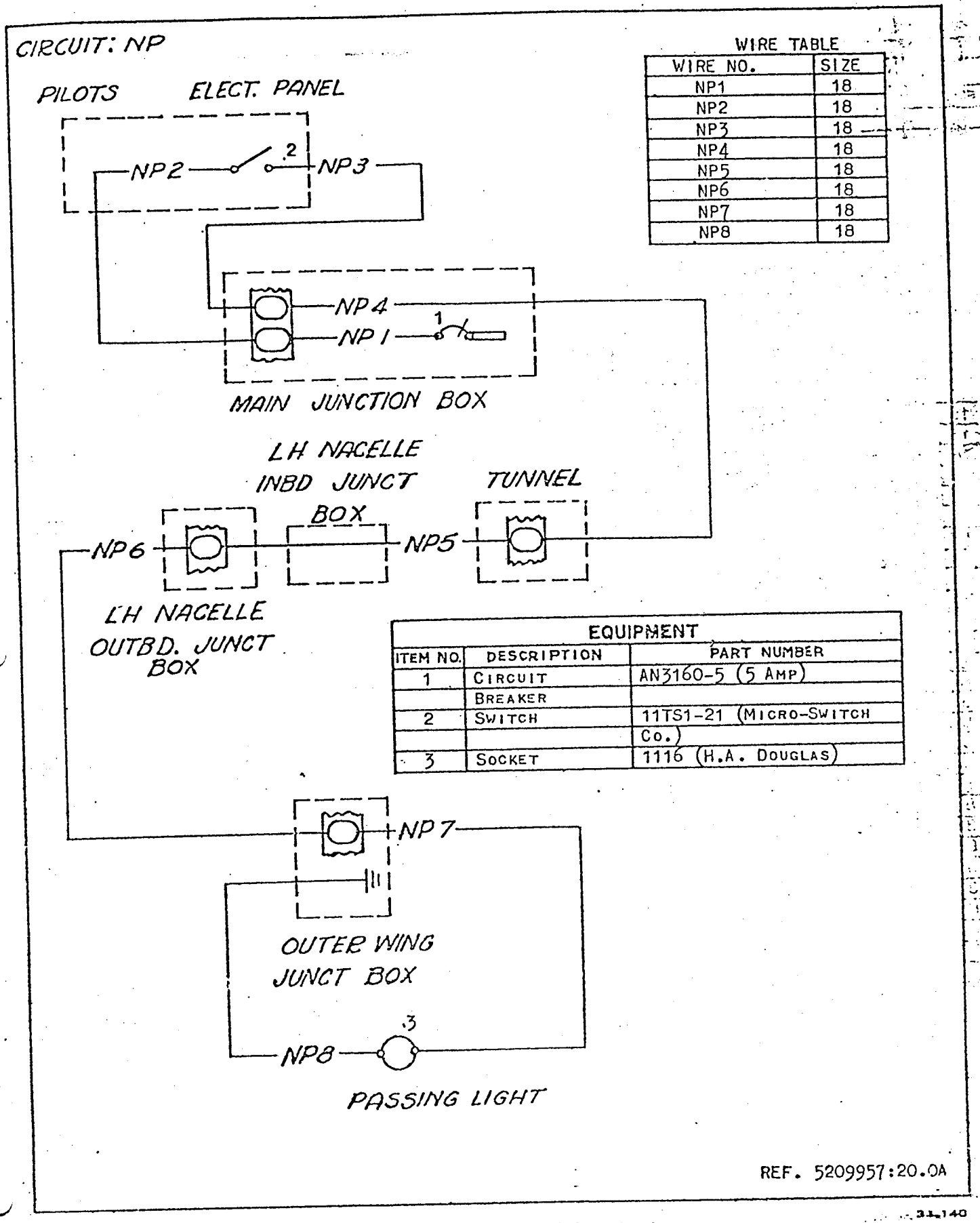

WIRE TABLE

WIRE NO.	SIZE
NP1	18
NP2	18
NP3	18
NP4	18
NP5	18
NP6	18
NP7	18
NP8	18

EQUIPMENT

ITEM NO.	DESCRIPTION	PART NUMBER
1	CIRCUIT	AN3160-5 (5 AMP)
	BREAKER	
2	SWITCH	11TS1-21 (MICRO-SWITCH
		CO.)
3	SOCKET	1116 (H.A. DOUGLAS)

Figure 12-36. Passing Lights Circuit

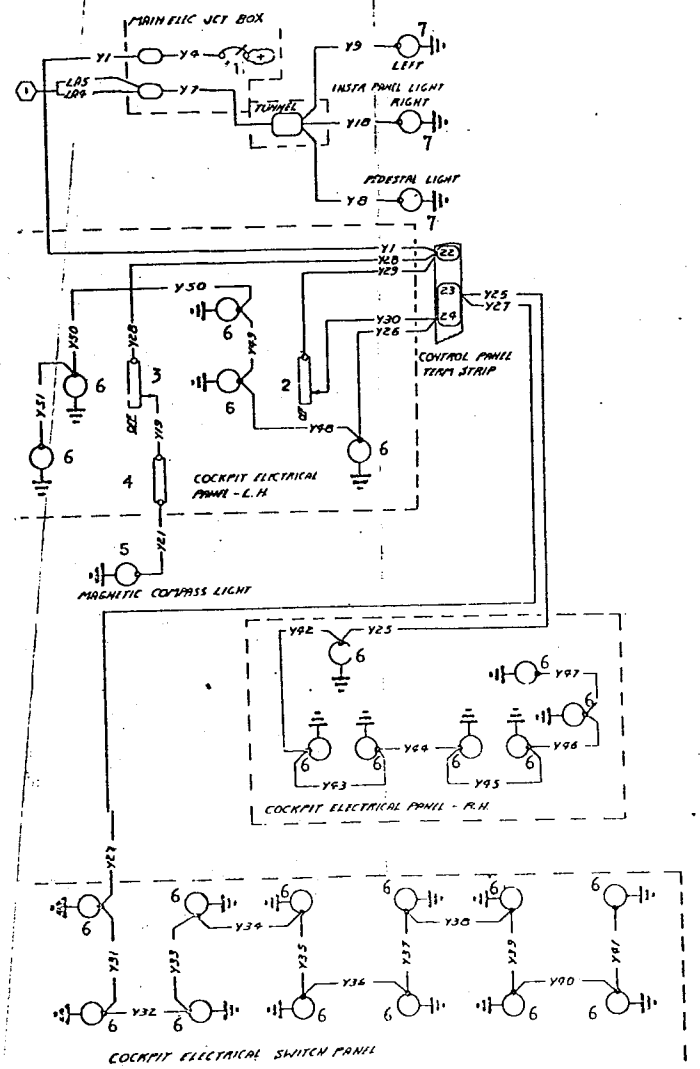

EQUIPMENT		
ITEM NO.	DESCRIPTION	PART NUMBER
1	CIRCUIT BREAKER	AN3160-5
2	RHEOSTAT	AN3155-50-50
3	RHEOSTAT	MODEL "H" 352 (OHMITE)
4	RESISTOR	AC37A5222-13
5	LIGHT	FURNISHED WITH COMPASS (PIONEER)
6	LIGHT	A6165-327 (GRIMES MANUFACTURING CO.)
7	LIGHT	2130136

WIRE TABLE

WIRE NO.	SIZE
Y7	18
Y8	18
Y9	18
Y18	18
Y19	18
Y21	18
Y25	18
Y26	18
Y27	18
Y28	18
Y29	18
Y30	18
Y31	18
Y32	18
Y33	18
Y34	18
Y35	18
Y36	18
Y37	18
Y38	18
Y39	18
Y40	18
Y41	18
Y42	18
Y43	18
Y44	18
Y45	18
Y46	18

WIRE TABLE

WIRE NO.	SIZE
Y47	18
Y48	18
Y49	18
Y50	18
Y51	18

NOTE:

(1) SEE COCKPIT LIGHTS SYSTEM WIRING DIAGRAM.

REF 5209957:47.0

31,141

Figure 12-27. Panel, Compass and Instrument Lights Circuit

WIRE TABLE

WIRE NO.	SIZE
LR1	14
LR2	14
LR3	16
LR4	16
LR5	16
LR6	16
LR7	16
LR8	16
LT9	16
LR10	16
LR11	16
LR12	16
LR13	16
LR14	16
LR15	16
LR17	16
LR18	16
LR19	16
LR20	16
LR21	16
LR22	16
LR23	16
LR24	14
LR25	14
LR26	16
LR27	16
LR28	16

EQUIPMENT

ITEM NO.	DESCRIPTION	PART NUMBER
1	CIRCUIT BREAKER	AN3160-25
2	SWITCH	12TS1-21 (MICRO-SWITCH Co.)
3	SWITCH	8907K502 (CUTLER-HAMMER)
4	LIGHT SOCKET	TYPE SC
5	LIGHT SOCKET	2116 (H.A. DOUGLAS)

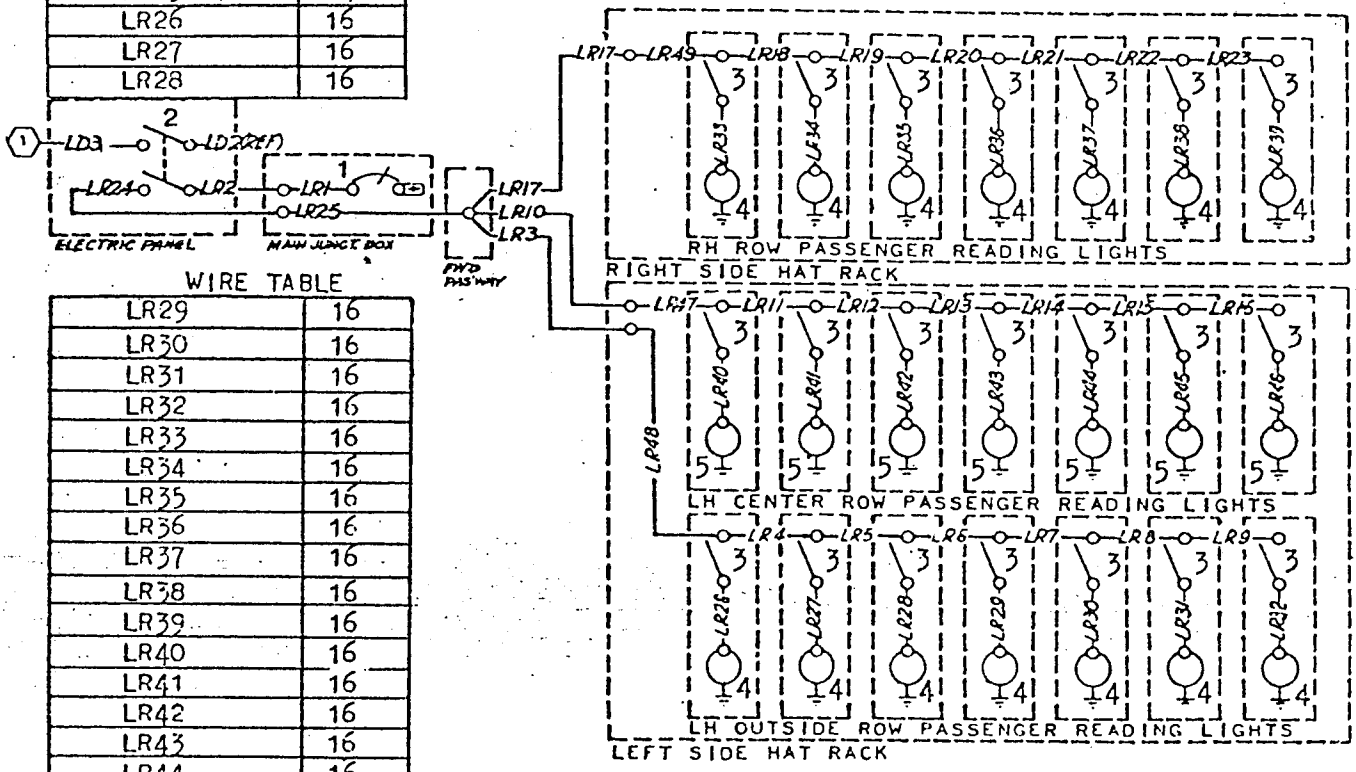

WIRE TABLE

LR29	16
LR30	16
LR31	16
LR32	16
LR33	16
LR34	16
LR35	16
LR36	16
LR37	16
LR38	16
LR39	16
LR40	16
LR41	16
LR42	16
LR43	16
LR44	16
LR45	16
LR46	16
LR47	16
LR48	16
LR49	16

NOTE:

(1) SEE CABIN DOME LIGHTS WIRING DIAGRAM.

REF 7483358:39.0

31,142

Figure 12-38. Reading Lights Circuit (C-117 Series Only)

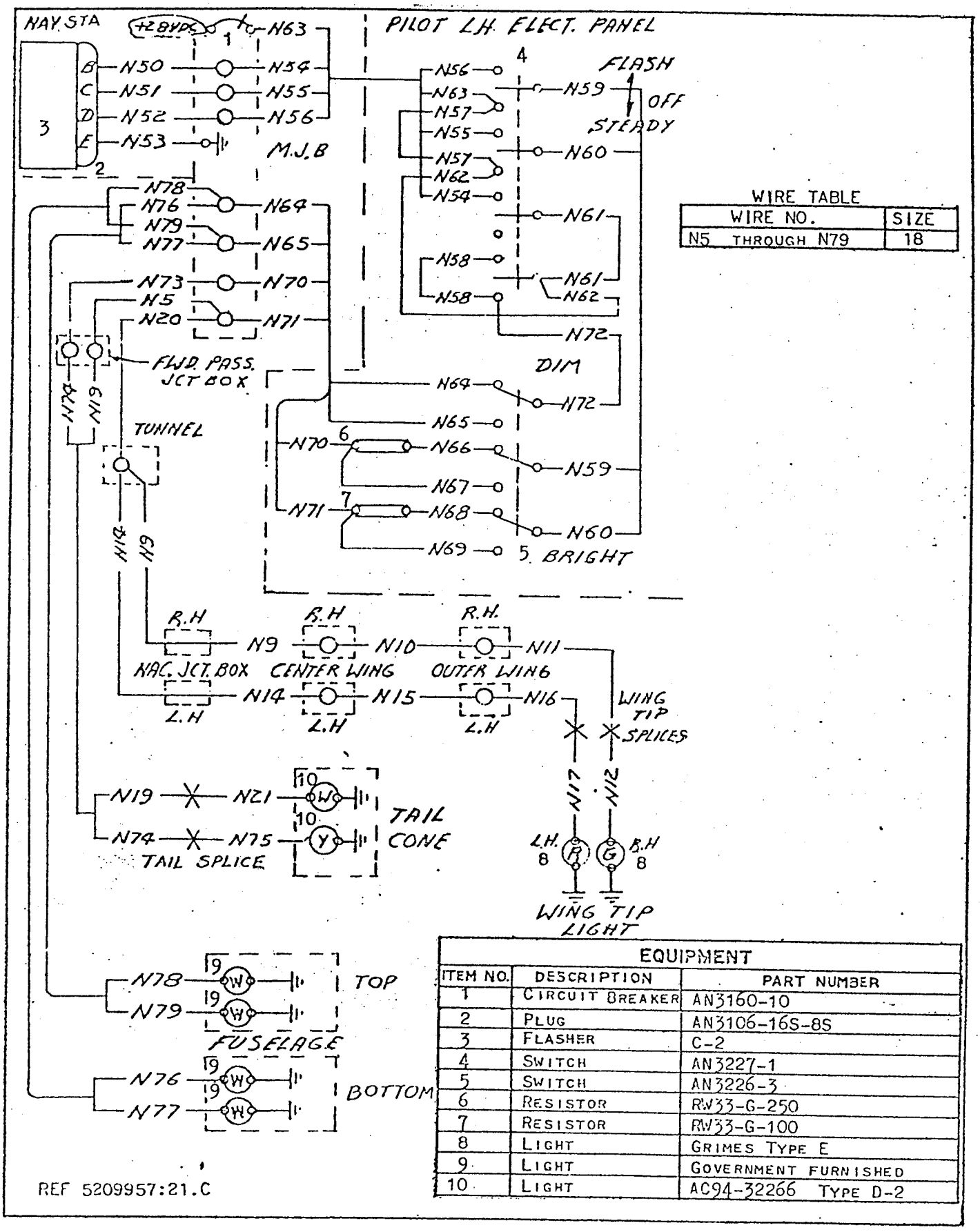

WIRE TABLE

WIRE NO.	SIZE
N5 THROUGH N79	18

EQUIPMENT

ITEM NO.	DESCRIPTION	PART NUMBER
1	CIRCUIT BREAKER	AN3160-10
2	PLUG	AN3106-16S-8S
3	FLASHER	C-2
4	SWITCH	AN3227-1
5	SWITCH	AN3226-3
6	RESISTOR	RW33-G-250
7	RESISTOR	RW33-G-100
8	LIGHT	GRIMES TYPE E
9	LIGHT	GOVERNMENT FURNISHED
10	LIGHT	AC94-32266 TYPE D-2

Figure 12-39. Navigation Lights (C-47 Series Only)

31.143

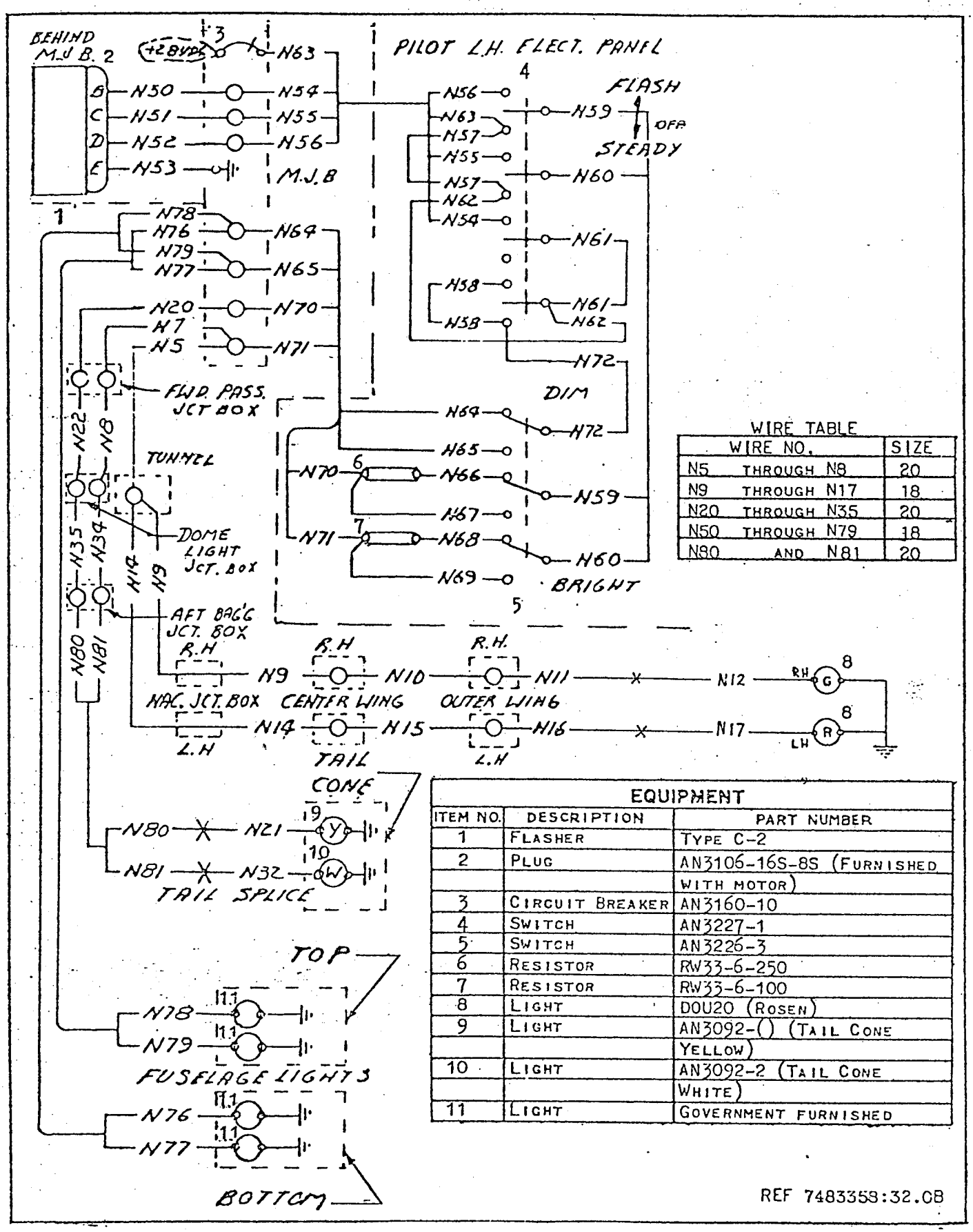

WIRE TABLE		
WIRE NO.		SIZE
N5	THROUGH N8	20
N9	THROUGH N17	18
N20	THROUGH N35	20
N50	THROUGH N79	18
N80	AND N81	20

EQUIPMENT		
ITEM NO.	DESCRIPTION	PART NUMBER
1	FLASHER	TYPE C-2
2	PLUG	AN3106-16S-8S (FURNISHED WITH MOTOR)
3	CIRCUIT BREAKER	AN3160-10
4	SWITCH	AN3227-1
5	SWITCH	AN3226-3
6	RESISTOR	RW33-6-250
7	RESISTOR	RW33-6-100
8	LIGHT	DOU20 (ROSEN)
9	LIGHT	AN3092-() (TAIL CONE YELLOW)
10	LIGHT	AN3092-2 (TAIL CONE WHITE)
11	LIGHT	GOVERNMENT FURNISHED

31.144

Figure 12-40. Navigation Lights Circuit (C-117 Series Only)

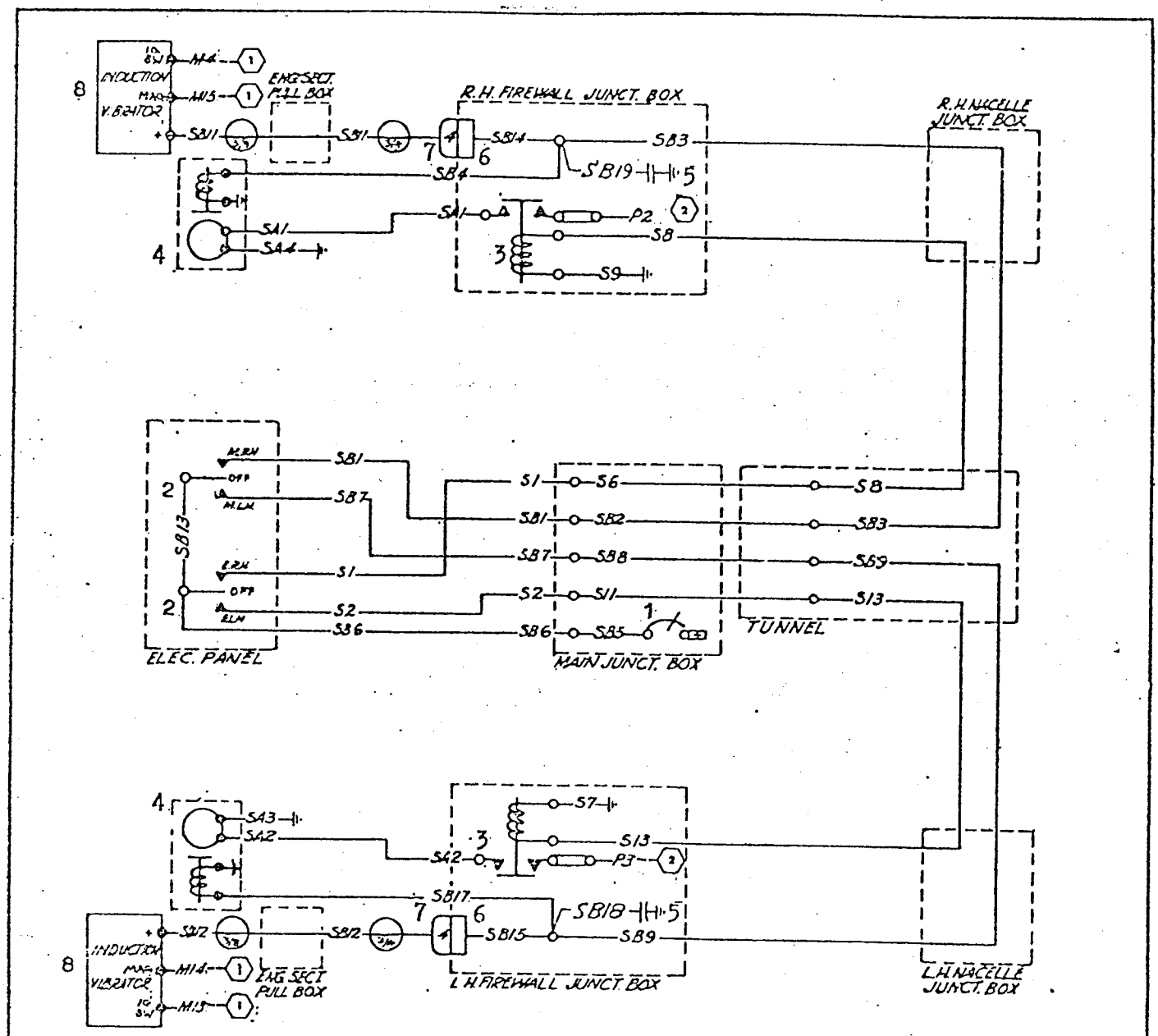

EQUIPMENT		
ITEM NO.	DESCRIPTION	PART NUMBER
1	CIRCUIT BREAKER	AN3160-20
2	SWITCH	AN-3021-7
3	RELAY	94-32424-A (B-8)
4	STARTER	JH-3R (JACK & HEINTZ)
5	CAPACITOR	CA-275X (4MFD)
6	RECEPTACLE	GK-C8-32SL (CANNON)
7	PLUG	GK-C8-213/4B (CANNON)
8	INDUCTION VIBRATOR	VJS 24A1 OR AN4181-1

WIRE TABLE

WIRE NO.			SIZE
S1	THROUGH	S13	16
SA1	THROUGH	SA4	4
SB1	THROUGH	SB19	16

REF 7483358:43.0

Figure 12-41. Starter Induction Vibrator Circuit

31,145

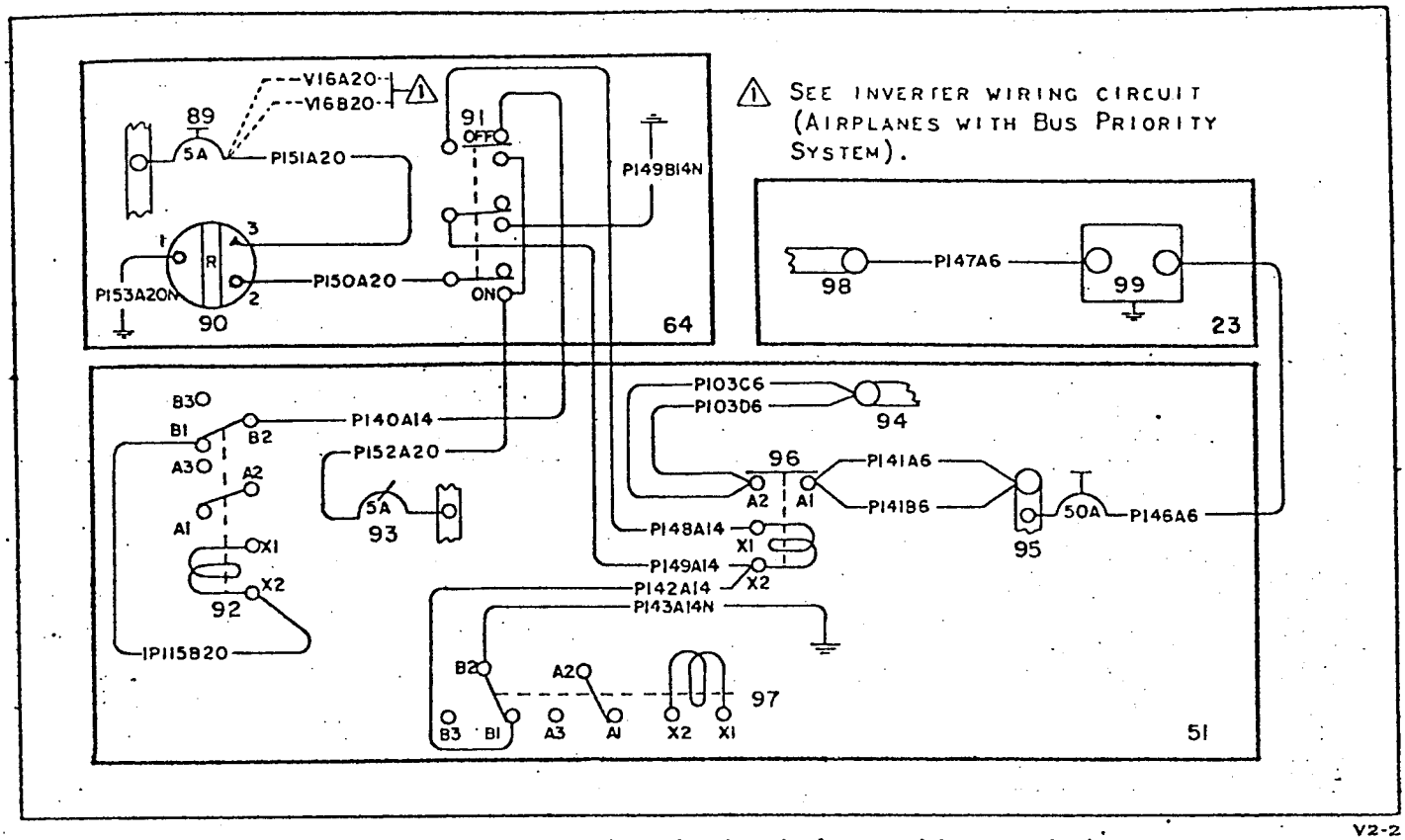

V2-2

Figure 12-42. Power Distribution Circuit (Airplanes with Bus Priority System)

Key to Figure 12-42

Item	Nomenclature	Item	Nomenclature
23.	Radio Junction Shield	93.	Instrument Light Circuit Breaker (MS25005-5)
51.	Main Electrical Junction Box	94.	28 Volt No. 1 Bus
64.	Power Systems Control Panel	95.	28 Volt No. 2 Bus
89.	Inverter Control Circuit Breaker (MS25005-5)	96.	Bus Priority Relay (AN3370-2)
90.	Ground Test Power Light (AN3157-2)	97.	Right Generator Failure Relay (AN3311-1)
91.	Ground Test Power Switch (AN3226-3)	98.	No. 2 Radio Bus
92.	Left Generator Failure Relay (AN3311-1)	99.	Noise Filter (RF3-75)

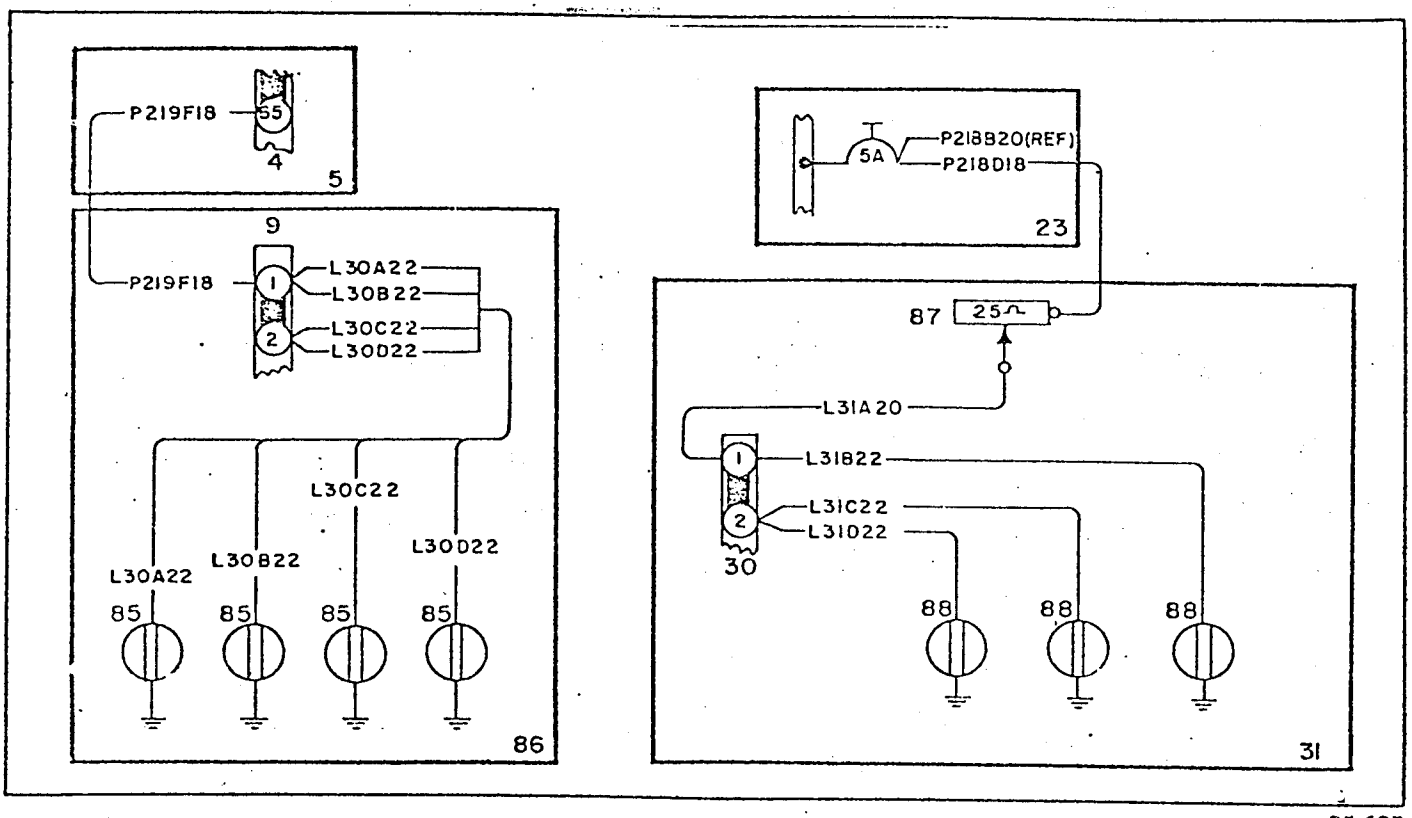

35,625

Figure 12-43. Instrument Lighting Circuit (Airplanes with Bus Priority System)

Key to Figure 12-43

Item	Nomenclature	Item	Nomenclature
4.	Overhead Panel Terminal Board	31.	Navigator's Instrument Panel
5.	Pilot's Overhead Control Panel	85.	Indicator Light (ID250ARN – MS25010-4)
9.	Compass Terminal Board	86.	Pilot's and Copilot's Instrument Panel
23.	Radio Junction Shield	87.	Navigator's Light Rheostat (AN3155-25-25)
30.	Navigator's Instrument Panel Terminal Board	88.	Navigator's Panel Light (MS25010-4)

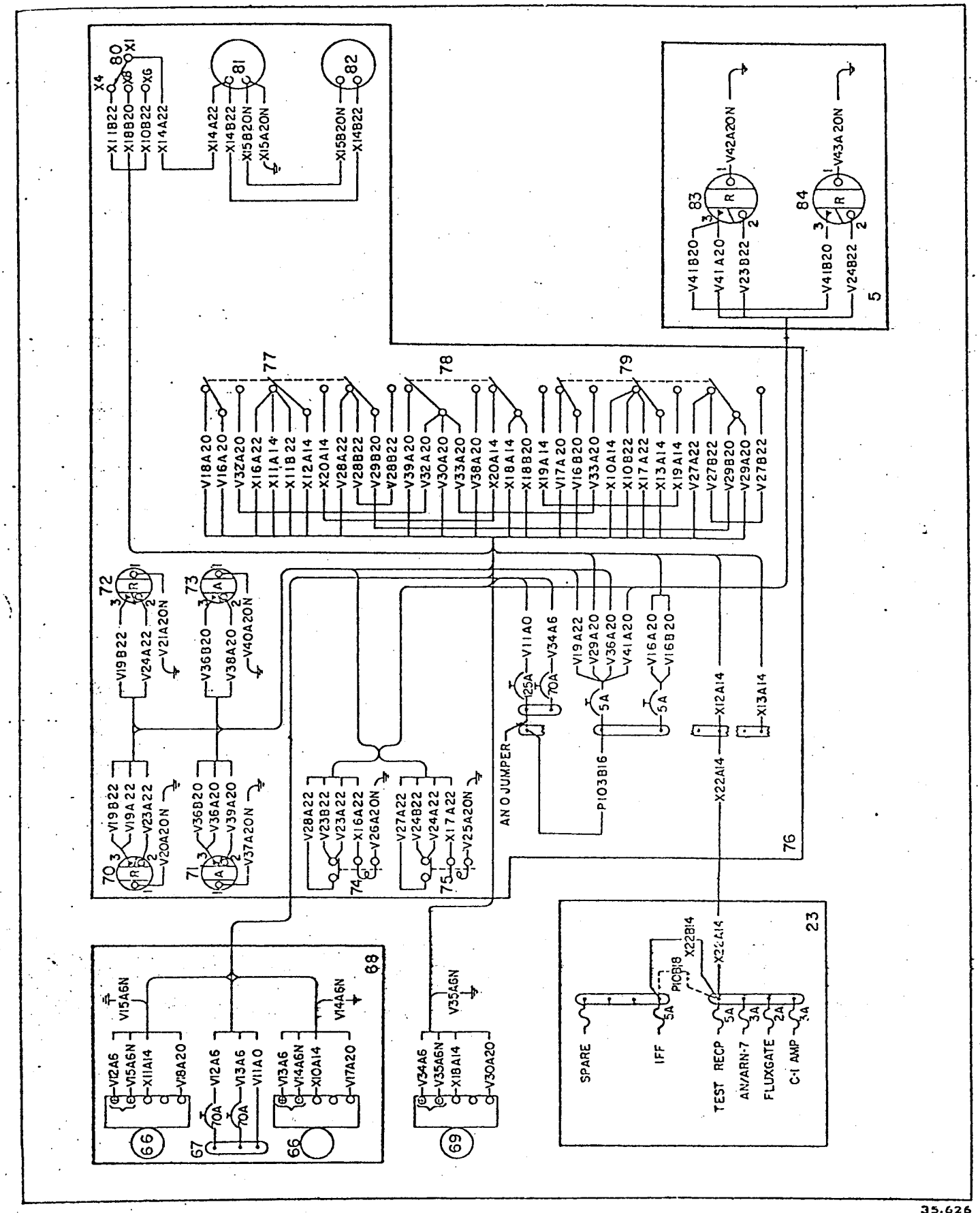

35,626

Figure 12-44. Inverter Wiring Circuit (Airplanes with Bus Priority System)

Key to Figure 12-44

Item	Nomenclature
5.	Pilot's Overhead Control Panel
23.	Radio Junction Shield
66.	Inverter [PU-16( ) or AN3514-1]
67.	28 Volt D-C Bus
68.	Inverter Compartment
69.	Spare Inverter [PU-16( ) or AN3514-1]
70.	No. 1 Inverter Failure Warning Light (AN3157-6)
71.	Spare Inverter on No. 1 Bus Indicator (AN3157-8)
72.	No. 2 Inverter Failure Warning Light (AN3157-6)
73.	Spare Inverter on No. 2 Bus Indicator (AN3157-8)
74.	Inverter Failure Warning No. 1 Relay (AAF44B15874)
75.	Inverter Failure Warning No. 2 Relay (AAF44B15874)
76.	Power System Junction Shield
77.	No. 1 Inverter Switch (AN3226-1)
78.	Spare Inverter Transfer Switch (AN3023-3)
79.	No. 2 Inverter Switch (AN3226-1)
80.	Inverter Meter Selector Switch (AN3211-1)
81.	Voltmeter (AN3202-1)
82.	Frequency Meter (8AW59FAA1)
83.	No. 1 Inverter Failure Warning Light (AN3157-2)
84.	No. 2 Inverter Failure Warning Light (AN3157-2)

WIRE TABLE

WIRE NO.	SIZE
HB1	10
HB2	10
HB3	10
HB4	14

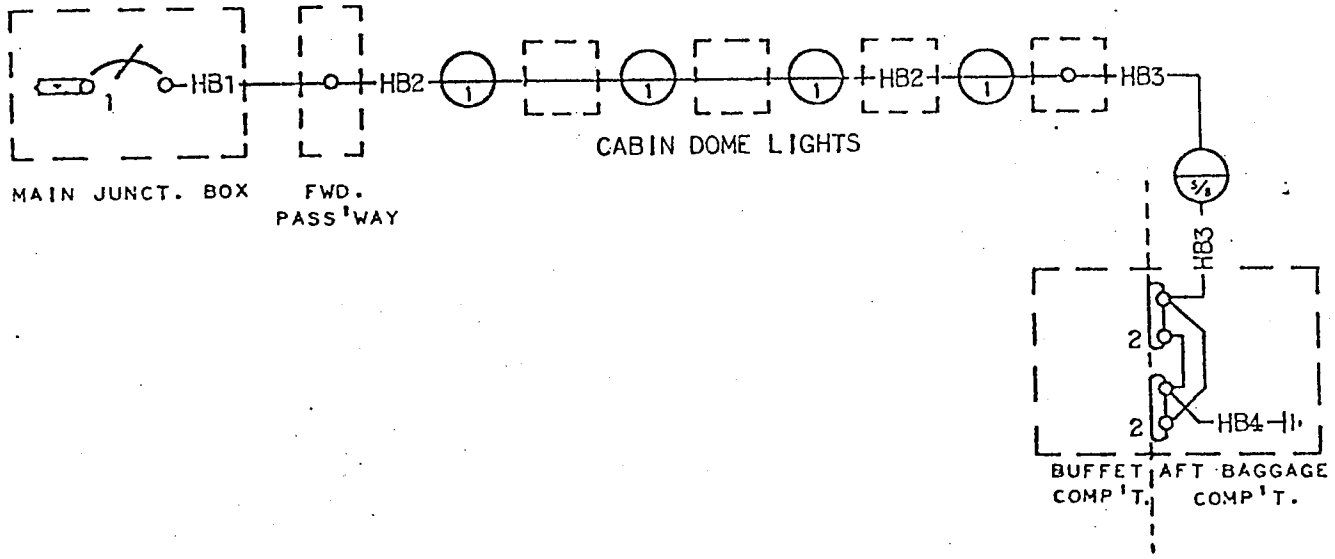

EQUIPMENT		
ITEM NO.	DESCRIPTION	PART NUMBER
1	CIRCUIT BREAKER	AN3160-35
2	RECEPTACLES	STANDARD

REF 7483358:14.0

31,163

Figure 12-66. Buffet Hot Cup Receptacle Circuit (C-117 Series Only)

EQUIPMENT		
ITEM NO.	DESCRIPTION	PART NUMBER
1	CIRCUIT BREAKER	AN3160-5
2	LIGHT	AAF44A18454-2
3	SWITCH	9390-0 (FURNISHED WITH INDICATOR)
4	PLUG (POWER)	AN3106-145-9S
5	PLUG (INDICATOR)	AN3106-145-6P
6	SIGNAL ASSEMBLY	SK-1557-1 (MINE SAFETY APPLIANCES)

WIRE TABLE

WIRE NO.	SIZE
WC1	20
WC2	20
WC3	20
WC4	20
WC5	20
WC6	20
WC7	20
WC8	20
WC9	20
WC10	20
WC11	20
WC12	20
WC13	20
WC14	20
WC15	20
WC16	20
WC17	20
WC18	20
WC19	20
WC20	20
WC21	20
WC22	20
WC23	20
WC24	20

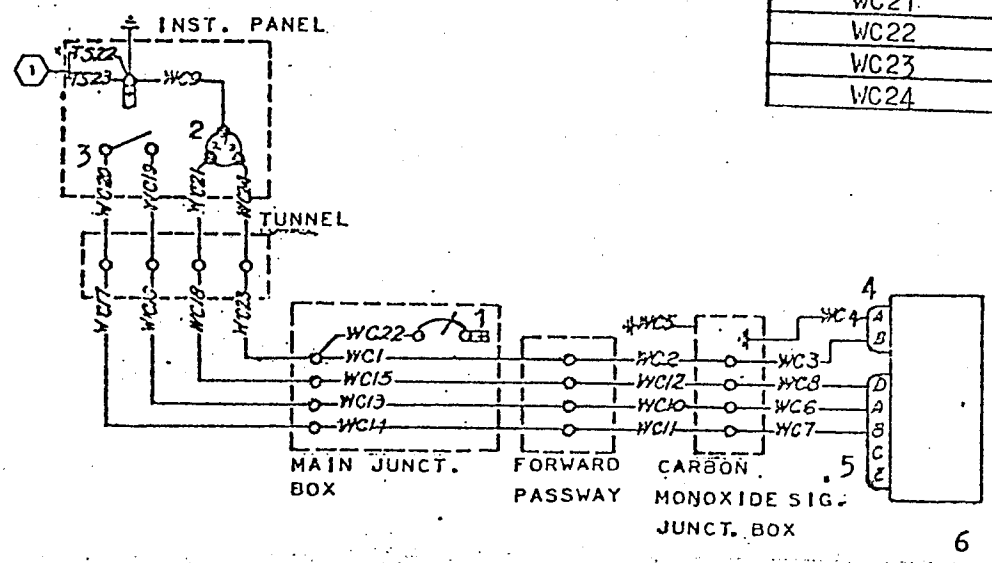

NOTE:

(1) SEE HEAT AND VENT WARNING WIRING DIAGRAM.

REF 7483358:16.0

Figure 12-67. Carbon Monoxide Indicator Circuit (C-117 Series Only)

34.164

ALPHABETICAL INDEX

Section and Page No.

A

Accessory Power Plant 12-42
Accumulator, hydraulic system pressure 3-22
Accumulator, test procedure for
hydraulic system pressure 3-24
A-c power 1-19
A-c power system 8-35
functional test and adjustment 8-36
*inverter 8-36
operational checkout 8-35
trouble shooting 8-35
Actuators valves packing winterization 2-119
Adjustment of Control Valve Safety
Latch Mechanism 10-17
Aerodynamic Rigger Adjustment 10-61
Aileron
Controls 11-22
controls 1-23
dust excluder 2-20
Master Differential Horn, Use of Wood
Blocks to Secure in Neutral 11-27
Outboard Bellcrank Actuating Rod 11-28
Aileron control system 11-21
operational test and adjustment 11-24
trouble shooting 11-21
Ailerons 1-23, 11-21
Aileron trim tab 1-23, 11-28
Controls 11-29
operational test and adjustment 11-29
trouble shooting 11-28
Aileron trim tab indicator 7-35
operational test and adjustment 7-36
operational test and checkout 7-35
trouble shooting 7-35
Air eliminator, test after installation of steam
heating system 3-91
Airframe 1-5
Airframe group maintenance 2-48
Air mixture control, heating system, steam 3-88
Airplane 1-1
electrical soldering 8-2, 12-2
fuel truck, grounding 2-23
hoisting complete 2-1
jacking 10-1
Leveling from Nose to Tail 2-25
Leveling from Wing Tip to Wing Tip 2-25
markings for winterization 2-123
servicing 1-5
skis 10-42
storage, treatment of hydraulic system during 3-8
wiring information, general 12-1

Italics indicate illustrations.
Indicates items discussed under two or more airplane effectivity groups.

Section and Page No.

Air vacuum system 7-55
Alarm circuit test of fire detection circuit 8-80
Alcohol spray winterization 2-120
Altimeters 1-17
operational test and checkout 7-6
trouble shooting 7-6
Ammeters 7-42
generator 8-32
generator, adjustment 8-32
Amplifier, interphone, AM/26A/AIC-3 9-32
Amplifier, interphone, AM/26/AIC 9-33
Analysis sheet, engine conditioning 5-4
AN/APX-6 IFF Components 9-30
**Antennas* 9-2, 9-3
Antennas
glide slope, AN/ARN-18 9-27
IFF radar 9-29
Installation (Airplanes with Dual AN/ARN-6
Radio) 9-4
liaison 9-26
*loop 9-20
marker beacon 9-31
sense 9-21
sense, blade, AN/ARN-6 9-21
sense, wire, AN/ARN-6 9-21
UHF, AT-256/ARC-27 9-24
VHF receiver-transmitter, AN/ARC-3 9-9
VOR navigation, ARN-14 9-14
Anticollision Light Installation 8-46
Anticollision Light (Red Rotating Beacon) 12-30
Anti-icing and de-icing circuits,
operational checkout 8-58
Anti-icing and de-icing circuits, trouble shooting 8-58
Anti-icing and de-icing systems circuits 8-58
Anti-icing and de-icing systems, servicing 2-30
Anti-icing power rheostat, propeller 8-61
Anti-icing pump 1-11
Anti-icing pump motor
carburetor and windshield 8-61
circuit, carburetor and windshield 8-61
circuit, propeller 8-60
propeller 8-61
Anti-icing systems 1-11, 3-129
electric pump, windshield and carburetor 3-135
manifold and distributor piping, carburetor 3-137
propeller 1-11, 3-138
slinger ring and feeder tube assembly, propeller 3-141
supply tank, windshield 3-132
windshield 1-11, 3-132
Anti-icing winterization 2-120
Areas 1-1
Arrangement for Towing from Front 2-13
Astrodome, navigator's 7-59
Astrodome curtain 2-105
Automatic radio compass, test 9-22

Section and Page No.

A (Cont'd)

Autopilot
emergency shutoff valve 7-57
engaging lever 7-56
followup system cable 7-55
Followup System — Key Drawing 7-56
Hydraulic Fluid Filter 7-53
winterization 2-123
Autopilot hydraulic fluid system 7-51
bleeding air 7-51
check valves 7-52
Autopilot System 7-46
Autopilot system 1-21,7-45
control units 7-50
functional test and adjustment 7-58
operational checkout 7-47
trouble shooting 7-50
Auxiliary Check Valve Installed 3-116
Axle Nut, Removal 10-23
Axle, Removing from Wheel 10-24

B

Baggage compartment, forward 2-94
Baggage compartment, rear 2-95
Bail-Out Signal Circuit 12-78
Batteries 8-20
Batteries, servicing 2-28
Battery
Battery Elevator 8-21
elevator 8-22
elevator, inspection and maintenance 8-22
inspection and maintenance 8-20
Power Feeds, and Ground Power Circuit 12-28
switch, master 8-23
Battery connector relay 8-22
inspection and maintenance 8-22
test before installation 8-22
Battery system 1-19,8-20
Schematic 8-19
trouble shooting 8-20
Beam Installation 6-24
Bearings, lubrication of open-type 2-35
Blade-angle limit adjustment 4-119
Blower
Clutch Desludging Equipment 4-39
clutch selector valve 4-40
Clutch Selector Valve Conversion for Flushing 4-40
Control and Clutch Selector Valves 4-38
drain valve 4-38
heating and ventilating system electric defrosting, hot air 3-103
motor control relay, windshield defroster 8-63
motor, windshield defroster 8-63
Warning Circuit 12-79
warning circuit 8-81
Boiler, heating system, steam 3-86
Boiler Installed 3-91
Bolt torque values, power plant 2-89
Bonding 1-19,8-1,12-3
dissimilar metal contacts 8-2
fuel discharge nozzle to airplane 2-21
Fuel Discharge Nozzle to Airplane 2-25
Layout — Ferry Fuel System 6-28
parts with conducting finishes 8-1
parts with nonconducting surfaces 8-2
Typical Examples 6-29

Section and Page No.

Brake
Actuating Pistons, Removing 10-27
assemblies 1-22,10-24
assemblies, adjustment 10-26
Control, Parking 10-33
Control Valve Assembly 3-79
Control Valve, Operation 3-81
Control Valve Test Connections 3-82
flight wheel 1-22,10-29
Hydraulic Hose Connection 10-22
Hydraulic System 3-77
Hydraulic System, Bleeding 10-29
mechanism, parking 10-29
pedal, rudder, adjustment 10-28
system, hydraulic 1-11
Torque Collar Attaching Bolts, Removing 10-22
Torque Collars, Specification for Machining 10-55
Brake assembly
Complete 10-25
Parking 10-32
Torque Collar, Removing from Axle 10-22
Brakes, bleeding 10-28
Brake shoe
Balancing Spring, Removing 10-25
Holddown Spring, Installing 10-28
Holddown Spring, Removing 10-26
Pulldown Spring, Installing 10-28
Pulldown Spring, Removing 10-26
Ring, Installing 10-27
Striking Right 10-25
Brake shoes
Adjusting 10-28
Collapsing 10-26
Extending 10-27
Installing on Spider 10-27
Lifting 10-26
Removing 10-27
Brakes, hydraulic system, bleeding 3-74
Brakes, parking 1-5
Brake system self-sealing couplings, hydraulic 3-78
Breaker Assembly — Scintilla and American Bosch Magnetos 4-101
Breaker points, inspection and cleaning 5-32
Bromochloromethane (CB) Bottle Temperature Pressure Chart 3-144
Buffet
Hot Cup Receptacle Circuit 2-106
hot cup receptacle circuit 12-79
Bungee 8-85
Forward Yoke, Removing Bolt 1-21,10-16
Spreader Bar 10-19
Spreader Bar in Place Before Retraction of Landing Gear 2-48
Spreader Bar (Service Tool No. K51902), Use 10-18
Spreading with Hydraulic Jack 10-19

C

Cabin
Cold Air Control and Carbon Monoxide Unit 3-108
compartment 1-5
Dome Lights Circuit 12-32
entrance step 2-113
flooring 2-108
lining 2-108

Italics indicate illustrations.

Section and Page No.

C (Cont'd)

Cabin *(Continued)*
Looking Aft, Main 2-98
Looking Forward, Main 2-96
main 2-94
seats 2-106
section flooring 2-99
Ventilator and Heat Controls 3-105
Cabin and compartment
Dome Lights Circuit 12-31
lights system 8-48
lights system, operational checkout 8-48
Cable Rigging Tension Chart 11-4
Cables
autopilot followup system 7-55
control 11-1
fuel firewall shutoff valves and control 6-12
limiting 10-49
Cable tension winterization 2-121
Capacitor, generator noise 8-33
Carbon Pile Voltage Regulator 8-29
Carburetor 1-13,4-73,5-25
gaskets, plugs, and connections check 5-26
heat and alcohol anti-icing systems winterization 2-116
Idle Adjustment Details 4-82
Idle Adjustments 5-28
Installed 4-151
Throttle Control Arm 4-6
Upper Accessory Cowling Installations 4-152
Windshield De-icer 12-10
Carburetor air
Control System 4-7
Induction Circuit 12-18
induction controls 4-9
induction systems 1-13,4-85
temperature indicating system 1-18,7-35
Temperature, Oil Temperature, and Free Air Temperature Circuit 12-23
Carburetor and windshield anti-icing pump motor 8-62
circuit 8-61
circuit, operational checkout 8-62
Carburetor anti-icing system 3-137
control valve 3-137
Manifold and Carburetor Duct 3-137
manifold and distributor piping 3-137
Relief Valve (Exploded View) 3-137
Card holder, compass correction 2-113
Cargo
compartment 1-5,2-89
Compartment, Main 2-96
compartment winterization 2-119
section flooring 2-99
Cargo door
emergency panel 2-97
handle guard 2-113
Inside 2-100
small 2-97
Carpeting 2-108
CB Fire Extinguisher System Control Panel 3-142
CB Fire Extinguisher Unit — Nacelle Piping and Wiring 3-143
**CB Type Fire Extinguisher Circuit* 12-12
Center Wing — Bottom View 2-79
Center Wing Installation 2-83
Center Wing — Top View 2-80
Checklist holder, pilot's 2-113
Checks
acceleration 5-7
accelerator pump 5-27
audible blowby 5-5
carburetor gaskets, plugs, and connections 5-26
carburetor pressure 5-4
discharge nozzle 5-27
emergency fuel shutoff valve 5-25
engine analyzer 5-98
engine pre-installation 4-41
fuel fill valve 5-25
fuel pump 5-26
fuel selector valve 5-26
full throttle (takeoff power) 5-7
idle mixture and speed 5-7
ignition harness 5-33
ignition switch 5-7
ignition system 5-7
liquid lock 5-5
magneto-to-engine timing 5-31
mixture control assembly, manual 5-25
oil dilution valve 5-26
Pilot's Seat 2-102
pilot's seat 2-97
primer system 5-26
propeller 5-7
stability 5-7
valve 4-75
vapor separators 5-25
Chocks Installed at Main Wheels 2-15
Circuits
anti-icing and de-icing systems 8-58
buffet hot cup receptacle 8-85
emergency alarm 8-81
engine primer 8-72
fire extinguisher 8-64
fuel quantity 8-73
fuel system 8-72
heat and vent 8-62
indicator, carbon monoxide 8-82
landing gear 1-19,8-52
landing gear safety 8-52
miscellaneous 8-82
oil dilution 8-58
oil system 8-57
oil temperature 8-57
oxygen pressure warning 8-82
parapack 8-82
paratroop warning 8-81
passenger warning 8-81
pneudraulics 8-58
power plant 8-66
propeller feathering 8-70
protection 8-1
Schematic, Miscellaneous 8-85
signal, attendant 8-85
temperature, free air 8-85
trouble shooting of propeller feathering 8-70
windshield defroster 8-63
Clamps, clips 3-8
Cleaning 9-1
Cleaning of tail ski rigger 10-53
Clevis Sling 2-69
Clips and clamps 3-8
Clocks 7-42

Italics indicate illustrations.

**Indicates items discussed under two or more airplane effectivity groups.*

Section and Page No.

C (Cont'd)

Cockpit Lighting Circuit 12-33,12-34
Cold weather operation, covers, protective 2-123
Cold weather operation, tires and tubes 2-123
Collector ring, exhaust 4-104
Color coding, power plant quick-disconnect 4-1
Communications equipment
  liaison 1-20,9-24
  UHF command 1-20,9-23
  VHF 1-20,9-2
Compartment
  baggage, forward 2-94
  baggage, rear 2-95
  cargo 2-92
  flight 2-92
  lavatory 2-92
  radio 2-92
  tail 2-94
Compass
  amplifier, gyro flux gate 7-22
  control head, radio 9-20
  correction card holder 2-113
  definitions, magnetic 7-27
  flux gate readings, plotting curve 7-23
  gyro flux gate, ground swinging 7-24
  gyro flux gate, swinging and compensating 7-23
  master indicator, gyro flux gate 7-21
  radio (ADF) equipment 1-20,9-19
  repeater indicator, gyro flux gate 7-22
  Swinging Chart 7-27
  system, gyro flux gate 1-17,7-21
  System, Remote Indicating 7-29
  transmitter, gyro flux gate 7-22
Compasses, magnetic and remote-indicating
  air swinging 7-30
  ground swinging 7-28
  ground swinging, on a prepared base 7-30
  swinging and compensating 7-27
Compass, magnetic 1-17,7-18
  operational test and checkout 7-18
  preliminary instructions prior to swinging 7-27
  trouble shooting 7-18
Compass, remote-indicating magnetic 7-18
  functional test and adjustment 7-18
  trouble shooting 7-18
Compensator, landing gear hydraulic 3-69
Compression check procedure, MK-1 compression tester 5-22
Compression check procedure, S-1 compression tester 5-24
Conditioning, power plant 5-1
Configurations, engine 4-12
Constant-Speed Control (Propeller Governor) Linkage 4-10
Connectors, terminal 12-2
Container for miscellaneous items, canvas 2-113
Containers, data 2-113
Control
  boxes, interphone 9-32
  cables 11-1
  Cables at Servo Unit 11-25
  direction finder, AN/ARN-6 9-22
  mount assembly, gyro 7-51
  Surfaces 11-2
  surfaces, settings and ranges of movement 1-4
  system winterization 2-121
  valves 4-72
  Valves on Long Range Fuel System 6-27
  Wheel 11-24
  Wheel Column Lubrication Fitting 2-78
  wheel, operational test and adjustment 11-31
Control box
  Five Button Plunger 3-101
  parapack 8-84
  Three-Button Plunger 3-91
Control Column 11-26
Control column 1-23
Control Column Installed 11-17
Control panels
  hydraulic 1-11
  Junction Boxes 8-9
  VHF remote, C-404A/A 9-8
  VOR navigation, C-996/A 9-14
Controls
  carburetor air induction 4-9
  cowl flap 4-9
  de-icing system 3-120
  engine mixture 4-7
  inspection of surface 11-1
  power plant 4-2
  propeller 4-9
  throttle 4-4
Control systems
  aileron 11-21
  elevator 11-12
  flight 11-1
  rudder 11-6
Control units
  autopilot system 9-50
  gyro, bank-and-climb 9-50
  gyro, directional 9-50
Cooler
  assembly, oil 4-72
  oil 4-72
Co-Pilot's Area, Right View 9-10
Coupling unit, CU-65/ARN-6 9-22
Course indicator, ID-250/ARN 9-22
Covers
  cold weather operation, protective 2-12
  engine 2-19
  propeller 2-20
  protective 2-19
  wing 2-20
Cowl flaps 4-11
  Actuating Cylinder Assembly 3-51
  Actuating Cylinder Installed 3-52
  actuating cylinders 3-50
  controls 4-9
  Control Valve and Bracket Assembly 3-49
  Control Valve Assembly 3-48
  Control Valve Assembly Installed 3-50
  control valves 3-47
  cylinder dust excluder 2-19
  Hydraulic System 3-47
  hydraulic system 1-11,3-46
Cowling and cowl flaps 4-10
Cowling Plug — Air Filter Duct 4-16
Crankshaft position, establishing 5-37
Crew compartment winterization 2-119
Cross-Feed Valve Control 6-12
Cross-Feed Valve Installed 6-13
Cross-feed valves, maintenance, repair, and replacement 6-9
Crowfoot Square Drive Wrenches (K-21901 through K-21924) 2-59

Italics indicate illustrations.

Section and Page No.

C (Cont'd)

Curtains
- astrodome 2-105
- flight compartment 2-104
- navigator's and radio operator's window 2-105

Cylinder
- deflectors 4-35
- engine 5-30
- maintenance 5-26
- *Priming Pipes Installed* 4-96

Cylinders
- cowl flap actuating 3-50
- engine 4-32
- *Hook and Safety Latch Guide, Adjustment of Actuating* 10-10
- hydraulic brake system actuating 3-75
- landing gear actuating 3-65, 10-9
- landing gear actuating, adjustment 10-10
- oxygen 1-5
- oxygen system, low-pressure constant-flow 3-159
- ram-nonram type (hydraulic) actuating 4-90
- *Removal and Installation* 4-32
- test procedure for cowl flap actuating 3-50
- test procedure for wing flap hydraulic system actuating 3-59
- wing flap hydraulic system actuating 3-57

D

Data cases, map 2-113
Data containers 2-113
D-c power distribution 1-19
Deflectors, cylinder 4-35
Defroster blower winterization 2-120
Defueling and refueling 6-23

De-icing
- *Boot From Vertical Stabilizer, Detachment* 2-86
- **Control Handle Installed* 3-119, 3-121
- *Control Unit (OFF Flow), Surface* 3-119
- *Control Unit (ON Flow), Surface* 3-118
- *Fluid Nozzles* 2-31
- pump 1-11
- vacuum pump, test before installation 3-113
- valve motor circuit, flight surfaces 8-61
- valve motor, flight surfaces 8-61
- application method 2-33
- characteristics and precautions 2-34

De-icing boots 1-11, 3-121
- heavy cleaning 3-127
- *Removal, Repair, and Installation* 3-122
- resurfacing 3-127
- storing 3-127
- test after installation 3-129

De-icing pressure
- gage 7-35
- system, functional test and adjustment 7-35
- system, trouble shooting 7-35

De-icing system 1-11, 3-109
- air filter 3-119
- auxiliary valve 3-129
- check valves (pressure pipe) 3-115
- *Check Valve, Surface* 3-112
- controls 3-120
- distributor valve 3-116
- *Distributor Valve, Surface* 3-116
- distributor valve, test after installation 3-119
- drain cock 3-129
- *Oil Separator* 3-115
- oil separator 3-115
- piping 3-129
- pressure gage 3-120
- *Surface* 3-110
- vacuum pumps 3-112
- vacuum pump, test after installation 3-115

Demountable Power Plant, Complete —
- *Front Section* 4-159
- *R-1830-90D, Rear Section* 4-158
- *R-1830-92, Rear Section* 4-160

Depreservation, preoiling 5-2
Depreservation run 5-3
Dimensions and leading particulars, principal 1-1
Dimensions, General 1-2
Direct Drive Starter 2-120
Direction finder control, AN/ARN-6 9-22
Disc-type pressure oil strainer assembly 4-58
Distributor Valve and System Detail 3-117
Door-open warning circuit 8-80
**Door Open Warning Signal Circuit* 12-36, 12-37
Drain cock, de-icing system 3-129
Drain cock, windshield and carburetor anti-icing system 3-136
Drift Pin, Application 10-60
Drinking cup container 2-104

Drinking water
- *Provisions* 2-104
- receiver 2-104
- tank 2-104
- tank piping 2-104
- tap 2-104

Ducts, flexible hose, and outlets, hot air heating and ventilating system 3-103
Ducts, Hot Air System, Five-Way Branch 3-95

Dust excluder
- aileron 2-20
- cowl flap cylinder 2-20
- main landing gear shock strut 2-20
- nacelle 2-20
- nonram air filter 2-20
- plug assembly, muff-type 2-20

Dynamotor
- DY-66/ARN-14 9-14
- liaison transmitter, DY-17/ART-13 9-25
- receiver, Y-22A-AN/ARC-3 9-4
- transmitter, DY-21A/ARC-3 9-9

E

Electrical
- flight instruments winterization 2-121
- *Flight Instrument Wiring Instructions* 2-122
- inverters 1-19
- *Junction Box, Main* 8-13
- junction box, main 8-12
- *Load Analysis Graph* 8-6
- *Load Analysis — Starting Load Data* 8-8
- power distribution and supply 8-12
- soldering, airplane 8-2, 12-2
- *Symbols* 12-6
- symbols 12-3

Electrical control panel
- pilot's center 8-17

Italics indicate illustrations.

**Indicates items discussed under two or more airplane effectivity groups.*

Section and Page No.

E (Cont'd)

Electrical control panel *(Continued)*
pilot's left 8-15
pilot's right 8-17
Electrical system 1-19,8-1
inspection 8-3
winterization 2-119
wiring diagram list 12-4
wiring diagrams 12-4
Electrical wiring repairs 8-2,12-2
Electric Booster Pumps 6-19
Electric booster pumps 6-18
Electric booster pumps, test after installation 6-18
Elevator
battery 8-22
Controls 11-15
Trim Tab Controls 11-18
Trim Tab Travel Measurement 11-21
Elevator control system 11-12
operational test and adjustment 11-16
trouble shooting 11-14
Elevators 1-22
Elevator trim tab indicator 7-36
functional test and checkout 7-36
operational test and adjustment 7-37
trouble shooting 7-36
Elevator trim tabs 1-23
Elevator trim tab system 11-19
operational test and adjustment 11-20
trouble shooting 11-19
Eliminators, heating system air, steam 3-92
Emergency
alarm circuit 8-81
alarm circuit, operational checkout 8-81
entrance 2-97
Entrances — Cut-Through Areas 2-101
equipment 2-112
Exits 2-99
*exits 2-95
fire ax 2-109
hatch, pilots' 2-113
panel, cargo door 2-97
Spill Valve (Above Wing Hoist) 3-97
window 2-97
Empennage 1-5,2-76
Empennage Moored 2-19
Engine 4-11
analyzer 5-38
assembly, hoisting 2-2
Assembly Sling 2-5
Components in Shipping Container 4-128
conditioning analysis sheet 5-11
conditioning maintenance 5-22
configurations 4-12
covers 2-19
Cowl Flap Operating Cylinder End Wrench (K20401) 2-54
Cowling and Cowl Flaps 4-15
Cylinder Numbering and Firing Order 4-29
cylinder temperature indicating system 1-18,7-40
discrepancy analysis list 5-22
fire detection circuit 8-75
fuel pressure indicating system 1-20,7-34
fuel pressure indicator, trouble shooting 7-34
Hoisting Methods 4-129
ignition system 1-15
inspection 5-43
Installations Forward of Diaphragm 4-137
instrument systems 1-17,7-31
intake pipes 4-30
interchanging 4-14
manifold pressure system 1-18
mixture controls 4-7
Modified Cowling — Ski Configuration 10-59
Mount 4-18
mount 4-11
Mount and Cowling Inner Ring Attachments 4-144
Mounting Bolt Installation 4-19
oil-pressure indicating system 1-18,7-33
oil pressure indicating system, trouble shooting 7-33
Oil Pressure Relief System Schematic 4-61
oil pump 1-15
Oil System Flow Chart 4-56
oil system maintenance 5-22
oil temperature indicating system 1-18,7-35
primer system 4-95
operational check 5-4
overspeeding 5-43
pushrods 4-19
ratings 5-1
rear case 4-43
Rear Section and Diaphragm Installations 4-131
Rear View 4-28
rocker arms and covers 4-30
Section 4-20
Section Breather and Drainpiping — Aft of Inner Ring Assembly 4-149
Section Controls, Rigging 4-13
section of nacelle 1-13
section pull box 8-15
Shipping Container 4-126
shipping container 4-127
Sling (K-13201) 2-68
superchargers 1-15
Temperature Thermocouple Circuit 12-24
thermocouple circuit 7-40
Engine cylinders 4-32
Compression Tester, Type S-1 5-23
Engine-Driven Fuel Pump 4-75
Engine-driven fuel pump 4-81,6-16
adjustment 5-28
Showing Pressure Adjusting Screw 6-17
test after installation 6-17
Engine-driven hydraulic pump 3-40
Disassembled and Assembled 3-44
Installed 3-43
Selector Valve 3-20
selector valve 3-18
Engine primer
circuit 8-72
circuit, operational checkout 8-72
Oil Dilution Solenoid Circuit 12-19
solenoid 6-22
system 1-15

Italics indicate illustrations.

*Indicates items discussed under two or more airplane effectivity groups.

Section and Page No.

E (Cont'd)

Engines 1-13
Exhaust
Plug Assembly 2-25
system 4-104
tailpipe 4-106
Tailpipe Installed 4-105
Exhaust collector ring 4-104
Assembled, Installing 4-143
Disassembled 4-142
Installed 4-104
*Exits, emergency 2-95
Exploded View of Main Ski 10-52
Exploded View of Tail Ski 10-54

F

Fairleads and rubstrips 11-5
Feathering Pump and Electric Motor Assembly, Auxiliary Hydraulic 4-125
Filters
Air, (Oil Separator) and Filter (Cutaway View) 3-120
de-icing system air 3-119
fuel 2-26
hydraulic 3-45
hydraulic fluid 9-52
interphone 9-33
propeller anti-icing system fluid 3-140
test procedure for hydraulic 3-46
vacuum air 7-39
windshield and carburetor anti-icing system fluid 3-132
winterization 2-119
Fire ax, emergency 2-113
Fire detection circuit
alarm circuit test 8-80
engine 8-75
functional tests 8-80
polarity test 8-80
Fire detection relay box 8-76
Fire Detection Warning Circuit Schematic 8-77
Fire detector 8-76
Fire extinguisher cartridge 8-64
Fire extinguisher circuit 8-64
CB Type 12-11
functional test 8-64
operational checkout 8-64
Fire extinguisher, hand 2-112
Fire extinguisher system 1-11, 3-142
Firewall Junction Box 8-13
Firewall junction boxes 8-14
First aid kits 2-112
Flare container, signal 2-111
Flares 2-111
Flasher unit, navigation lights 8-48
Flight and navigation instruments 1-16, 7-3
Flight and navigation system winterization 2-121
Flight compartment 2-92
cabin, flooring between 2-107
cabin heat winterization 2-119
curtains 2-104
flooring 2-99
lighting system 8-49
light system, operational checkout 8-49
Flight control systems 1-22, 11-1
Flight Steward's Station 2-108
Flight surfaces de-icing valve motor 8-61
Flight surfaces de-icing valve motor circuit 8-61
Flight wheel brake 1-22
Fluid de-icing and defrosting 2-30
application method 2-33
characteristics and precautions 2-34
Fluid for de-icing and defrosting, application 2-33
Flux gate compass
Circuit 12-55
gyro, air swinging 7-21
gyro, erecting 7-19
readings, plotting curve 7-18
Four-Cable Outer Wing Sling 2-4
Freezedown, prevention 10-49
Fuel 1-4
Fuel and induction system maintenance 5-25
Fuel booster pump 8-75
circuit 8-74
circuit, operational checkout 8-74
motors 6-19
Fuel Circuits Schematic 8-73
Fuel Discharge Nozzle to Airplane, Bonding 2-25
Fuel discharge nozzle to airplane, bonding 2-21
Fuel feed system 6-7
Fuel filters 2-26
Fuel firewall shutoff valves and control cables 6-12
Fuel nozzle, bonding 1-5
Fuel Piping and Fittings, Ferry 6-26
Fuel pressure
gage pipe 6-21
indicating system 6-21
Warning Switch 8-82
Fuel provisions 1-5
Fuel pump, engine-driven 4-79, 6-16
Fuel Quantity Circuit 12-25
Fuel quantity circuit 8-73
functional test and adjustment 8-74
operational checkout 8-73
trouble shooting 8-73
Fuel Quantity Gage Tank Unit 8-75
Fuel quantity indicating system 6-23
Fuel quantity indicator 1-18, 7-33, 8-73
functional test and adjustment 7-33
trouble shooting 7-33
Fuel quantity tank unit 8-73
Fuel, servicing 2-21
Fuel Shutoff Control System 6-15
Fuel Shutoff Valves 6-14
Fuel Strainer 6-21
Fuel strainers 6-19
Disassembled 6-20
test after installation 6-21
winterization 2-116
Fuel system 1-16, 4-79, 6-1
bonding, long range (ferry) 6-27
circuits 8-72
Components and Controls 6-10
Components Inside Nacelle 6-12
Components on Firewall 4-81, 6-13
Firewall 6-22
Flow Diagram 6-4
long range (ferry) 1-16, 6-23
long range (ferry), test 6-27
Schematic Diagram 6-3
trouble shooting 6-1

Italics indicate illustrations.
Indicates items discussed under two or more airplane effectivity groups.

Section and Page No.

F (Cont'd)

Fuel system *(Continued)*
winterization 2-116
wiring diagrams 12-4
Fuel tanks
capacity 2-24
Drain Cock 6-6
draining 6-23
Drain Points 2-26
drain sump winterization 2-116
filling 6-23
Fittings on Top of Center Wing 6-7
Installed 6-2
location 2-23
main and auxiliary 6-5
number 2-23
selector valve indicator, adjustment 6-9
selector valves 6-7
selector valves, maintenance, repair, and replacement 6-8
Strap Puller (K-35401) 2-56
Sump Drain Wrench (K-21601) 2-57
Sump Drain Wrench in Operation 6-7
Fuel truck and airplane, grounding 2-23
Fuel truck, grounding 1-5
Fuel used, kind 2-24
Functional test
AN/AIC-3 interphone system 9-32
fire detection circuit 8-80
fire extinguisher circuit 8-64
generator system 8-33
leakage, of oxygen system 3-160
low-pressure constant-flow oxygen system 3-161
low-pressure demand oxygen system 3-160
pitot-static system 7-42
propeller feathering circuit 8-72
propeller feathering system 4-127
reverse-current relay cut-in voltage 8-30
starting system 4-111
Functional test and adjustment
*a-c power system 8-36
airspeed indicator 7-6
attitude indicator 7-18
autopilot system 7-58
de-icing pressure system 7-35
directional indicator 7-16
free air temperature indicating system 7-38
fuel quantity circuit 8-74
generator system 8-33
radio compass equipment 9-22
remote-indicating magnetic compass 7-18
turn and slip indicator 7-15
UHF command communications equipment 9-23
VHF communications equipment 9-11
VOR navigation equipment 9-15
wing flap indicator 7-38
Functional test and checkout of elevator trim tab indicator 7-36
Furnishings 2-100, 2-105
Fuselage 1-5, 2-89
floors 2-99
hoisting 2-1
lining 2-105
Sling, Inverted Vee 2-3
tunnel generator circuit junction box 8-15

Section and Page No.

G

Gage
de-icing pressure 7-35
de-icing system pressure 3-120
heating system pressure, steam 13-92
hydraulic pressure 3-40
oxygen system pressure, low-pressure 3-158
oxygen system pressure, low-pressure constant flow 3-160
winterization, pressure 2-118
Generator 12-39
*Generator 1-19, 8-27
ammeter 8-32
ammeter, adjustment 8-32
current limiters 8-33
equalizing resistor 8-33
field, flashing 8-28
inspection and maintenance 8-27
main line switch 8-33
noise capacitor 8-33
reverse-current relay 8-29
voltage regulator 8-28
wiring circuit 12-40
Generator system 1-19, 8-23
functional test 8-33
functional test and adjustment 8-33
in-flight paralleling adjustment 8-34
operational checkout 8-25
paralleling adjustment 8-34
Schematic 8-24
trouble shooting 8-25
voltage, adjustment 8-34
Glide Slope — AN/ARN-18 Circuit 12-56
Glide slope antenna, AN/ARN-18 9-27
Glide slope equipment 1-20, 9-26
operational checkout 9-26
trouble shooting 9-26
Glide slope indicator 1-17
Ground Gear Lock Installed 10-6
Ground handling 2-1
Ground handling, taxiing 2-12
Ground locks 1-21
Ground locks, landing gear 10-1
Ground preheat winterization 2-118
Gyro
control mount assembly 7-51
control unit, bank-and-climb 7-50
control unit directional 7-50
Gyro flux gate compass
adjusting compensating mechanism 7-26
adjusting compensating mechanism by turning airplane 7-26
air swinging 7-25
air swinging by celestial bearings 7-25
air swinging by terrestrial bearings 7-25
amplifier 7-22
ground swinging 7-24
ground swinging by sighting on airplane 7-24

Italics indicate illustrations.
**Indicates items discussed under two or more airplane effectivity groups.*

Section and Page No.

G (Cont'd)

Gyro flux gate compass *(Continued)*
ground swinging using compass rose 7-24
ground swinging using pelorus 7-24
master indicator 7-21
remote electrical caging drive and switch box 7-23
repeater indicator 7-22
swinging and compensating 7-23
system 1-17, 7-21
system, trouble shooting 7-21
transmitter 7-22

H

Harness and wiring, ignition system 4-102
Harness, personnel retaining 2-116
Heat and vent circuits 8-62
operational checkout 8-63
trouble shooting 8-63
Heat and Vent Warning Light Circuit 12-13
Heat and vent warning lights circuit 8-63
operational checkout 8-64
thermoswitch 8-64
Heater, heating and ventilating system
auxiliary, hot air 3-103
Heat exchangers
Attaching Muff-Type 3-99
*heating and ventilating system muff-type, hot air 3-102, 3-106
heating system muff-type, hot air 3-96
Installing Muff-Type 3-106
Heating and ventilating systems 1-7 3-80
auxiliary heater, hot air 3-103
carbon monoxide indicator, hot air 3-108
Control Box, Located Behind Co-Pilot 3-104
*controls and valves, hot air 3-103, 3-107
ducts, flexible hose, and outlets, hot air 3-103
ducts, flexible hose, outlets, vents, and airscoops, hot air 3-106
*electric defrosting blower, hot air 3-103, 3-107
*electric defrosting blower, hot air, test after installation 3-103, 3-107
**Hot Air* 3-84, 3-85, 3-89
*hot air 1-7, 3-93, 3-102, 3-103
*mixing valve assembly (mixing chamber), hot air 3-102, 3-106
*muff-type heat exchanger, hot air 3-102, 3-106
Steam 3-87
steam 1-7, 3-81
*thermoswitches and warning lights, hot air 3-103, 3-107
*windshield defrosting shields, hot air 3-103, 3-107
Heating system
air eliminators, steam 3-91
air mixture control, steam 3-88
boiler, steam 3-86
controls and valves, hot air 3-100
controls, steam 3-88
ducts, flexible hose, and outlets, hot air 3-99
emergency defroster windshields, hot air 3-100
muff-type heat exchangers, hot air 3-96
outlets, ducts, pipes, hose, and insulation, steam 3-93
pressure gage, steam 3-92
pressure regulator, steam 3-92
radiator, steam 3-88
shutoff valve control, steam 3-90
steam traps, steam 3-92

Italics indicate illustrations.
**Indicates items discussed under two or more airplane effectivity groups.*

Section and Page No.

thermoswitches and warning lights, hot air 3-100
valves, steam 3-92
water supply tanks, steam 3-86
windshield defrosting shields, steam 3-93
Hoisting
complete airplane 2-1
engine assembly 2-2
Fuselage 2-3
fuselage 2-1
Horizontal Stabilizer 2-5
horizontal stabilizer 2-2
outer wing panels 2-1
Points 2-2
propeller 2-3
provisions 1-5, 2-1
Rudder 2-5
rudder 2-2
Sling Link 2-69
Vertical Stabilizer 2-5
vertical stabilizer 2-2
Hollow Cap Screw and Nut Hex Adapters (K-22201 through K-22209) 2-63
Horizontal Stabilizer, Installation 2-85
Horizontal Stabilizer Sling (K-10801) 2-65
Hot Air System 3-101
Components Above Navigator's Compartment and Passageway 3-98
Components Above Pilot's Seat 3-97
Looking Aft 3-97
Navigator's Compartment 3-102
Outlets and Controls, Radio Operator's Compartment 3-96
Outlets, Navigator's Compartment 3-96
Hot fuel priming system 4-96
Hot fuel priming unit
Assembly 4-97
Installed — Left Nacelle 4-98
Installed — Right Nacelle 4-99
Hydraulic
compensator 1-21, 10-19
compensator, adjustment 10-19
Cylinder Piston Rod Clamp (Substitute for K-21713 and K-21714) 2-49
Cylinder Piston Rod Friction Wrench (K-21713 and K-21714) 2-51
Engine Pump Selection System — Ski Configuration 10-57
Filter 3-46
filter 3-45
piping 3-4
piping, inspection 3-4
Pump Selector Valve Rotor 3-21
Pump Selector Valve, Timing 3-21
windshield wiper 1-13
Hydraulic, brake, system 1-11 3-70
actuating cylinder 3-75
check valve 3-78
self-sealing couplings 3-78
Hydraulic control panel 1-11, 3-17
Front View 3-18
Rear View 3-19
Test Connections 3-19
test procedures 3-17
Hydraulic fluid
drain trap 7-52
filter 7-52
pressure gage 7-51
Pressure Gage, Operation 3-42
Pressure Gages Installed 3-43
pressure regulator 7-52

Section and Page No.

H (Cont'd)

Hydraulic fluid system, autopilot 7-51
bleeding air 7-51
check valves 7-52
Hydraulic hand pump 3-34
*Assembly 3-35,3-36
Packing Nut Spanner Wrench, Use 3-38
Hydraulic pressure
gage 3-40
indicating system 1-18,7-34
indicating system, trouble shooting 7-35
Regulator and Fittings 3-26
**Regulator, Removal* 3-26,3-27,3-30
Regulator Valve Nut Wrench (K-21201) 2-55
*Hydraulic system 1-11,3-1,3-2,3-3
airplane storage, treatment 3-8
brakes, bleeding 3-74
components winterization 2-118
cowl flap 1-11
engine pump selection system, modification 10-56
fluid reservoir 3-32
Fluid Reservoir Assembly 3-32
maintenance procedures, general 3-1
packings and gaskets 3-4
Pressure Accumulator 3-23
pressure accumulator 3-22
*pressure regulator 3-25,3-29
Pressure Regulator Assembly 3-25
pressure relief valve 3-33
Pressure Relief Valve Assembly 3-34
servicing 2-28
**Supply, Pressure, and Return* 3-5
test 3-8
Test Connections 3-9
wing flap 1-11

I

Idle mixture adjustment procedure 5-28
Idle speed adjustment 5-27
IFF
control unit 9-29
Equipment—AN/APX-6 Circuit 12-57
radar antenna 9-29
radar receiver-transmitter, RT-82/APX-6 9-27
IFF radar equipment 1-21,9-27
operational checkout 9-27
trouble shooting 9-27
Ignition
Circuit 12-20
switches 8-68
Timing Template 5-31
Ignition analysis 5-8
Ignition system 4-98,8-66
harness and wiring 4-102
Lead Clamp and Conduit Support Locations 4-100
maintenance 5-28
Spa...
Immersion heaters winterization 2-116
Indicating and operation of power plant 4-10
Indicator Circuit, Carbon Monoxide 12-80
Indicator circuit, carbon monoxide 8-82
Indicators
aileron trim tab 7-35
airspeed 1-17,7-4
airspeed, trouble shooting 7-5
attitude 1-17,7-16
course, ID-250/ARN 9-22
directional 1-17,7-16
elevator trim tab 7-36
fuel quantity 1-18,7-38,8-73
glide slope 1-17
heating and ventilating system carbon monoxide, hot air 3-108
marker beacon 9-31
oil pressure 4-77
oil temperature 4-78
oxygen system flow, low-pressure 3-158
radio, AN/ARN-18 9-27
radio compass 9-20
radio magnetic 7-36
rudder trim tab .....
test after installation of hot air heating and ventilating system carbon monoxide 3-109
turn-and-slip 1-17,7-14
vertical velocity 7-8
VOR navigation receiver, ARN-14 9-14
wing flap 7-37
winterization, directional 2-123
Induction vibrator 4-107
Inflight paralleling adjustment of generator system 8-34
Inspection
electrical system 8-3
engine 5-43
oil system 5-43
overboost condition, engine 5-44
provisions, access 1-4
surface controls 11-1
Inspection and maintenance
battery 8-20
battery connector relay 8-22
battery elevator 8-22
generator 8-27
voltage regulator 8-29
Inspection doors and cover plates
Bottom 1-6
**Left Side* 1-9,1-10
**Right Side* 1-9,1-10
Top 1-8
Instrument
Lighting Circuit 12-52
limit marking, method 7-3
limit markings 7-3
Panel 7-2,9-16
panel 1-16,7-1
System, Pitot-Static 7-4
Tubing at Panel, Pitot-Static 7-5
Instrument lights system 8-50
fluorescent 8-50
operational checkout 8-50
Instruments 1-16,7-1
flight and navigation 1-16,7-3
miscellaneous 7-59
wiring diagram list 12-4
Instrument systems
engine 1-17,7-31
operational test and checkout 7-1
trouble shooting 7-1
Internal Timing, Checking 5-30

Italics indicate illustrations.
**Indicates items discussed under two or more airplane effectivity groups.*

Section and Page No.

I (Cont'd)

Interphone
*AIC-3 Circuit 12-60, 12-61
amplifier, AM/26A/AIC-3 9-32
amplifier, AM-26/AIC 9-33
control boxes 9-32
Control Panel 9-31
filters 9-33
jack boxes, BC-1366M 9-33
RC-36-B Circuit 12-59
Interphone system, AN/AIC-3 9-31
functional test 9-32
operational checkout 9-31
trouble shooting 9-32
Interphone system, RC-36B 9-32
operational checkout 9-32
Interphone systems 1-20
*Inverter, a-c power system 8-36
Inverters, electrical 1-19
Inverter Wiring Circuit 12-53

J

Jack boxes, interphone, BC-1366M 9-33
Jacking
forward section using wing jacks 2-6
main wheel axles 2-9
Mooring Diagram 2-7
precautions 2-4
provisions 1-5, 2-4
tail section 2-9
Jack Installed at Tail 2-11
Jacks Installed at Knuckles of Rear Brace Strut 2-10
Jacks Installed at Main Wheel Axle 2-11
Jig for Pressure Testing of Metallic Fuel Tanks 6-6
Junction boxes 1-19
electrical, main 8-12
firewall 8-14
fuselage tunnel generator circuit 8-15
J-68/ARC-3 power 9-9
nacelle 8-14
parapacks 8-15
power systems 8-13
wing, center 8-14
wing, outer 8-14

K

Kits, first aid 2-112

L

Landing gear 1-21, 10-1
control valve 3-63, 10-21
Control Valve, Timing 3-66
ground locks 10-1
Hydraulic System 3-64
hydraulic system 3-63
indicator lights 10-21
Operation 3-73
position indicating and warning system 1-22, 10-20
Retracting Cylinder and Wing Flap Operating Cylinder Packing Wrench (K-20001) 2-51

Italics indicate illustrations.

*Indicates items discussed under two or more airplane effectivity groups.

Section and Page No.

safety circuit 8-52
safety solenoid 8-52
Safety Solenoid Circuit 12-76
safety switch 8-53
safety switch assembly, adjustment 8-54
tires, servicing 10-31
trouble shooting 10-3
warning horn 8-54, 10-22
warning horn, adjustment 10-22
warning horn, removal and installation of 10-22
Warning Switch Adjustment 8-56
warning throttle switches, adjustment 8-55
Wheel and Axle Assembly 10-21
wiring diagram list 12-5
wiring diagrams 12-5
Landing gear actuating cylinder 3-65, 10-9
adjustment 10-10
Assembly 3-70
Dashpot Wrench 3-72
Housing Wrench 3-72
Piston Rod Packing Nut Wrench 3-72
test procedure 3-69
Landing gear and wing flap
Control Valve Assembly 3-68
Valve Assembly 3-67
Valve Rotor 3-67
Landing gear circuits 1-19, 8-52
operational checkout 8-52
Schematic 8-53
trouble shooting 8-52
Landing Gear Hydraulic Compensator 10-20
Landing gear hydraulic compensator 3-69
Adjustment 10-20
Assembly 3-74
test before installation 3-70
Landing Gear Warning Circuit 12-75
Landing gear warning circuit 8-54
lights 8-56
limit switches 8-55
limit switches, adjustment 8-55
selector valve switch, adjustment 8-56
throttle switches 8-54
up-limit switch, adjustment 8-56
Landing lights
Circuit 12-43
Installation, Left 8-47
operational checkout 8-47
system 8-47
Latch control system, adjustment 10-16
Latch guide, adjustment 10-15
*Lavatory Compartment 2-102, 2-105
*Lavatory compartment 2-92, 2-100, 2-105
Lavatory flooring 2-100, 2-107
Leveling 1-5, 2-20
Lever, autopilot engaging 7-56
Liaison
antenna 9-25
Communication — AN/ARC-8 Circuit 12-62
receiver, BC-348 9-25
transmitter dynamotor, DY-17/ART-13 9-25
transmitting equipment, T-47A/ART-13 9-25
Liaison communication equipment 1-20, 9-24
operational checkout 9-25
Lighting Circuit, Fluorescent 12-38
*Lighting Locations 8-38, 8-40

Section and Page No.

L (Cont'd)

Lighting systems 8-39
flight compartment 8-49
operational checkout 8-40
Schematic 8-41
trouble shooting 8-40
Lights
landing gear indicator 10-21
landing gear warning circuit 8-56
replacement 8-51
signal, interaircraft 8-51
Lights circuit
Compartment 12-35
heat and vent warning 8-63
Landing 12-43
Navigation 12 48,12-49
Passing 12-45
Reading 12-47
thermoswitch, heat and vent warning 8-64
Limiters, generator current 8-33
Linkage to Constant Speed Control (Propeller Governor) 4-9
Link assembly, shock strut restraining 2-8
Long range (ferry) fuel system 1-16,6-23
bonding 6-29
test 6-29
Long Range Fuel Tank Installation 6-25
Lubricant
Landing Gear Actuating Cylinder Piston Rod Hook, Application 2-76
Landing Gear Assembly, Application 2-76
Tail Wheel Gear — Lower Shock Strut Fitting Being Serviced, Application 2-76
Wing Flaps Actuating Rod, Application 2-48
Wing Flaps Actuating Rod Universal Joint, Application 2-48
Lubricating Open-Type Bearing 2-77
Lubrication 1-5,2-33,9-1
airplane skis 10-45
bearings 2-35
Chart 2-36,10-48
dusty and sandy climates 2-35
instructions, general 2-35
open-type bearings 2-35
requirements for various climatic conditions 2-35
requirements, miscellaneous 2-35
salt air climates 2-35
tail ski rigger 10-53
winterization, general 2-123
Lugs, terminal 8-2

M

Magnetic and remote-indicating compasses
air swinging 7-30
ground swinging 7-28
ground swinging on a prepared base 7-30
swinging and compensating 7-27
Magnetic compass 1-17
definitions 7-27
preliminary instructions prior to swinging 7-27
Magneto
Blast Tubes Installed — Forward of Diaphragm 4-146
Cam Follower, Lubrication — Wide or Narrow Felt 5-33
Installed 4-103
Magnetos 1-15,4-99,5-31
Main and Tail Skis Installed 10-44
Main Electrical Junction Box (Original Configuration) 8-13
Main gear 1-21,10-1,10-6
extending with airplane on jacks 10-3
retracting with airplane on jacks 10-1
tires 1-22,10-30
Main gear shock struts 1-21,10-7
servicing 10-8
test in flight position 10-8
test in normal static 10-8
test procedure 10-8
Main landing gear
Axle Nut Lockscrew, Removing 10-23
Axle Nut Wrench (K-20101) 2-49
Axle Nut Wrench, Use 10-23
Extended 10-7
Jacking Points 2-8
Moored to Permanent Installations 2-19
Retracting Cylinder Wrench (K-21101) 2-53
shock strut dust excluder 2-20
(With Bungee) 10-2
(With Hydraulic Compensator) 10-4
Main skis 10-42
attaching to airplane 10 56
Extension and Retraction 10-50
Hydraulic Installation Details 10-47
hydraulic system 10-49
Retracting Arm and Attaching Parts 10-45
retracting mechanism 10-49
riggers 10-49
Maintenance procedures for hydraulic system, general 3-1
Major Components of C-47 Airplanes 1-12
Major Components of C-117 Airplanes 1-14
Manifold assembly, oxygen system, low-pressure constant-flow 3-160
Manifold pressure
excessive 5-44
indicating system 1-20,7-32
indicating system, trouble shooting 7-32
System 7-33
system 4-98
Manifold, vacuum 7-44
Map and data cases 2-113
Marker beacon
antenna 9-31
indicator 9-31
RC-193 Circuit 12-63
receiver, BC-1333 9-29
Marker beacon equipment 1-21,9-29
operational checkout 9-29
Mechanical Safety Latch System 10-11
Metal particles in oil 5-40
Miscellaneous equipment 2-113
Mixer boxes, 51C-2575 9-33
Mixing Chamber Operation 3-94
Mixing valve assembly (mixing chamber), heating and ventilating system, hot air 3-106
Mixture Control System 4-4
Modifications prior to installation of main skis 10-53
Mooring 1-5,2-14
Arrangements, Side View 2-18
Tiedown Equipment 2-20
Grid Pattern, 30-Foot 2-17

Italics indicate illustrations.

Section and Page No.

N

Nacelle
dust excluder 2-20
Dust Excluder and Exhaust Plug Assembly — Installed 2-23
engine section 1-13
Fitting with Sling Cable Attached 2-4
Hot Air Installation 3-105
junction boxes 8-14
Sling, Two-Cable 2-2
Navigation equipment, VOR 1-20,9-11
Navigation Lights 12-48
Navigation lights
flasher unit 8-47
system 8-41
system, operational checkout 8-41
Navigator's
astrodome 7-59
Compartment Hot Air System 3-103
Oxygen Equipment 3-154
radio operator's window curtains 2-105
**Station* 9-17,9-18
stool 2-98
table 2-98
Table and Carpet 2-102
Nonram air filter dust excluder 2-20
Nonram Air Filter Dust Excluder — Installed 2-23

O

Oil 1-4
consumption 4-48
Consumption Chart 4-47
emergency shutoff valve 4-78
Flow and Propeller Feathering System 4-53
**Flow through Cooler* 4-73,4-74
Inlet Pad Modification 2-117
lubricating 1-5
pressure indicator 4-77
Pump, Main 4-63
pump, main 4-57
separator, de-icing system 3-116
separator, test before installation of de-icing system 3-116
suction line drain winterization sump, main 2-116
Sump, Main — Removal and Installation 4-67
**Tank Diagram* 4-70,4-71
**Tank Preparation for Filling* 2-27
tanks 4-69
tanks, servicing 2-26
Oil and fuel pressure warning circuits 8-80
Oil cooler 1-16,4-72
assembly 4-72
Drain Plug 2-28
Installed 4-72
Location — Ski Configuration 10-58
Oil dilution
circuit 8-58
circuit, operational checkout 8-58
Fuel Pipes 4-78
solenoid 6-21
solenoid valve 4-77
winterization 2-116
Oil Pressure Relief Valves 4-64
Oil pressure relief valves 4-63
Oil strainer 4-57
assembly, pressure, disc-type 4-58
Assembly, Servicing 4-59
bypass valve 4-62
Oil system 1-16,4-46
circuits 8-57
Control Levers and Instruments 4-73
**Fluid Flow* 4-54,4-55
inspection 5-43
Instruments 4-80
Original C-47 4-48
Original C-47A 4-49
Schematic 8-57
winterization 2-116
With Surge Valve on Firewall 4-51
With Type D-8 Surge Valve 4-50
Oil temperature
Gage Resistance Bulb — Installation 8-40
indicator 4-78
Regulator with Type D-8 Surge Valve 4-75
Oil temperature circuit 8-57
operational checkout 8-57
trouble shooting 8-57
Operational check of compression tester — type S-1 5-22
Operational check of engine 5-4
Operational checkouts
a-c power system 8-35
AN/AIC-3 interphone system 9-31
anti-icing and de-icing circuits 8-58
autopilot system 7-47
carburetor and windshield anti-icing pump motor circuit 8-62
emergency alarm circuit 8-81
engine primer circuit 8-72
fire extinguisher circuit 8-64
flight compartment light system 8-49
fuel booster pump circuit 8-74
fuel quantity circuit 8-73
generator system 8-25
9-26
heat and vent circuits 8-63
heat and vent warning lights circuit 8-64
IFF radar equipment 9-27
instrument lights system 8-50
landing gear circuits 8-52
landing lights 8-47
liaison communication equipment 9-25
lighting systems 8-40
marker beacon equipment 9-29
navigation lights system 8-41
oil dilution circuit 8-58
oil temperature circuit 8-57
oxygen system 3-147
priority bus generator system 8-25
propeller anti-icing pump motor circuit 8-60
propeller feathering circuit 8-70
radio compass (ADF) equipment 9-19
RC-36B interphone system 9-32
starter system 8-68
starting system 4-106
UHF command communications equipment 9-23
VHF communications equipment 9-2
VOR navigation equipment 9-11
warning systems 8-75
windshield defroster circuit 8-63
Operational tests and adjustments
aileron control system 11-24

Italics indicate illustrations.

**Indicates items discussed under two or more airplane effectivity groups.*

O (Cont'd)

	Section and Page No.
Operational tests and adjustments *(Continued)*	
aileron trim tab	11-29
aileron trim tab indicator	7-36
altimeter	7-6
attitude indicator	7-17
control wheel	11-31
elevator control system	11-16
elevator trim tab indicator	7-37
elevator trim tab system	11-20
free air temperature indicating system	7-38
instrument systems	7-1
magnetic compass	7-18
rudder control system	11-11
rudder trim tab indicator	7-36
rudder trim tab system	11-12
tachometer system	7-31
turn-and-slip indicator	7-14
vertical velocity indicator	7-8
wing flap indicator	7-37
wing flap system	11-5
Operation of airplane skis	10-49
Operation of ram-nonram filter-type (electrical) system	4-90
Outer Wing Panel Sling (K-10101)	2-64
Overhead Radio Control Panels (Airplanes with Dual AN/ARN-6 Radio)	9-9
Overspeeding, engine	5-43
Overvoltage relays	8-32
Oxygen	
cylinders	1-5
Cylinders Installed	3-154
Filler Valve	3-157
Filler Valve Unit	3-157
Hose Assemblies for Winterization, Examination	2-121
hose assemblies winterization	2-121
Pressure Correction Graph	3-161
pressure warning circuit	8-82
Oxygen system	1-18,3-147
check valves, low-pressure	3-156
cylinders, low-pressure constant-flow	3-159
cylinders, low-pressure demand	3-151,3-153
demand regulators, low-pressure	3-157
filler valves, low-pressure	3-157
five cylinders, low-pressure demand	3-151
flow indicator, low-pressure	3-158
instrument panel, low-pressure constant-flow	3-159
Low-Pressure	3-146
low-pressure constant-flow	3-159
Low-Pressure Demand and Constant Flow	3-150
manifold assembly, low-pressure constant-flow	3-160
pipes and fittings	3-154
pipes and fittings, storing	3-156
portable equipment, low-pressure	3-159
pressure gage, low-pressure	3-158
pressure gage, low-pressure constant-flow	3-160
purging	3-162
servicing low-pressure constant-flow	3-160
servicing low-pressure demand	3-153
shutoff valves, low-pressure	3-156
test, leakage	3-160
three cylinders, low-pressure demand	3-153
valves, low-pressure	3-156
valves, low-pressure, testing	3-157
warning light, low-pressure	3-159
winterization	3-162
Oxygen systems	7-45
Low-Pressure	3-146
low-pressure demand	3-151
Low-Pressure Demand and Constant Flow	3-152
Oxygen tanks and portable cylinders, servicing	2-34

P

	Section and Page No.
Panel, hydraulic control	3-17
Panel, oxygen system instrument, low-pressure constant-flow	3-159
Parapack	
auxiliary switch box	8-84
Circuit	12-81
Circuit Schematic	8-83
control box	8-84
control relays	8-84
Junction Box, Aft	8-16
Junction Box, Center	8-16
junction boxes	8-15
release mechanism	8-82
Paratroop warning circuit	8-81
Parking	2-12
Parts list for flight instrument winterization	2-122
Passengers' Compartment — View Looking Forward	2-107
Passengers' Station, Equipment	2-108
Passenger warning circuit	8-81
*Personnel accommodations	2-100,2-105
Personnel retaining harness	2-116
Personnel Retaining Harness Hanger and Stowage Bag (C-47 Airplanes Except AC and DC Configurations)	2-115
Phase adapter winterization	2-122
Pilot	
Area, Left View —	9-8
center electrical control panel	8-18
check list holder	2-113
**Compartment*	2-94,2-95
**Electrical Control Panels*	8-17,8-19
emergency hatch	2-97
Heat Outlet	3-99
Hot Air Control (Some C-47 Airplanes)	3-96
left electrical control panel	8-16
right electrical control panel	8-18
Seat	2-102
seats	2-97
UHF communication transmitter-receiver control unit, C-628/ARC-27	9-23
Pipe, fuel pressure gage	6-21
Pipes and fittings, oxygen system	3-154
Pipes and fittings, oxygen system, storing	3-156
Pipes, engine intake	4-30
Piping	2-86
Bend Chart	2-89
bending	2-89
cutting	2-89
de-icing system	3-130
flaring	2-89
Flaring Dimensions	2-89
hydraulic	3-4
hydraulic, inspection	3-4
Identification Chart — New Style	2-88
Identification Chart — Old Style	2-87
material	2-89
Method of Tying	2-90
method of tying	2-89
template	2-86
size and length	2-86

Italics indicate illustrations.

*Indicates items discussed under two or more airplane effectivity groups.

Section and Page No.

P (Cont'd)

Piston and Cup Assemblies, Installing 10-27
Piston Rod Clamp (Service Tool No. K21714), Use 10-9
Pistons and piston pins 4-36
Pitot Heater Circuit 12-26
Pitot-static system 1-18,7-41
functional test 7-42
trouble shooting 7-41
Plug assembly, muff-type dust excluder 2-20
Pneudraulics
circuits 8-56
Circuits Schematic 8-59
wiring diagram list 12-4
wiring diagrams 12-3
Power
distribution and supply, electrical 8-12
Distribution Circuit 12-51
distribution system 8-12
External 8-24
For Turn-and-Slip Indicators, Identification 7-15
loading data 8-12
receptacle, external 1-19,8-24
sources 1-20,9-1
systems junction box 8-14
Systems Junction Box (Airplanes with Bus Priority System) 8-10
Systems Junction Box Control Panel (Airplanes with Bus Priority System) 8-11
Power plant 1-13,3-1
bolt torque values 2-89
buildup 4-127
Fire Extinguisher Spray Ring 3-145
circuits 8-66
Circuits Schematic 8-66
conditioning 5-1
controls 4-2
Electrical Components 8-65
indicating and operation 4-10
lubrication winterization 2-116
oil coolers, relocation 10-56
winterization, auxiliary 2-119
wiring diagram list 12-4
wiring diagrams 12-4
Preoiling and depreservation 5-2
Preservation of carburetor for shipment 4-45
Preservation of engine for shipment 4-45
Pressure
gage, hydraulic fluid 7-51
indicating systems 7-33
relief valve 4-74
Priming System — Early Engines 4-96
Principle of Electrically and Manually Operated Ram-Nonram Air Induction Systems 4-86
Principle of Hydraulically Operated Ram-Nonram Air Induction System 4-87
Principle of the Ram and Ram Filter Air Induction Systems 4-84
Propeller 1-15
Assembly 4-111
Blade Angle Check 4-114
Control Engine Bracket 4-12
controls 4-9
covers 2-20
De-icer Motor, Wing De-icer Valve Motor Circuit 12-15
Dome Assembly 4-117
hoisting 2-3
Hub and Blades Assembly 4-115
Installation Procedure 4-113
Repair — Minor Damage 4-121
system 4-111
Valve Assembly and Anti-Icing Pipe Installation 4-116
winterization 2-120
Propeller anti-icing
Feeder Tube Assembly and Piping Installed 4-121
Power Rheostat 8-64
power rheostat 8-61
Slinger Ring and Feeder Tube Assembly 3-141
Propeller anti-icing pump motor 8-61
circuit 8-60
circuit, operational checkout 8-60
Propeller Anti-Icing System 3-132
Propeller anti-icing system 1-11,3-138
fluid filter 3-140
Fluid Supply Tank and Rheostat 3-138
Major Components 3-140
pump 3-140
Pump Showing Operation 3-139
pump, test after installation 3-140
shutoff valve 3-141
slinger ring and feeder tube assembly 3-141
supply tank 3-138
supply tank, test before installation 3-138
Propeller feathering
Accessories Installation, Typical 4-14
Oil System 4-52
pressure cutout switch 8-72
pump 4-126
Pump Circuit 12-21
relay 8-71
Switch 8-71
switch 8-70
Propeller feathering circuit 8-70
functional test 8-72
operational checkout 8-70
Propeller governor 4-124
Disassembled 4-122
Governor Controls, and Piping Installed 4-147
Propellers 1-4
Pull box, engine section 8-15
Pulleys and pulley brackets 11-5
Pump
circuit, fuel booster 8-74
Control, Wobble 6-16
motors, fuel booster 6-19
selector valve, engine-driven hydraulic 3-18
Pumps
de-icing system vacuum 3-112
electric booster 6-19
electric booster, test after installation 6-19
engine-driven fuel 4-79,6-16
engine-driven fuel, test after installation 6-17
engine-driven hydraulic 3-40
engine oil 1-15
fuel booster 8-75
hydraulic hand 3-34
*hydraulic hand, test procedure 3-37,3-38
oil, main 4-57
propeller anti-icing system 3-138
propeller feathering 4-126
vacuum 7-44
Wobble 6-16
wobble 6-13
wobble, test after installation 6-16

Italics indicate illustrations.

*Indicates items discussed under two or more airplane effectivity groups.

Section and Page No.

P (Cont'd)

Pumps Disassembled (C-47 and Early C-47A Airplanes), Wobble 6-17
Pump-to-Pressure Accumulator Shutoff Valve, Hand 3-39
Pump-to-pressure accumulator shutoff valve, hand 3-38
Pushrods and Covers — Removal and Installation 4-31
Pushrods, engine 4-19
Pyrotechnic pistol (M-8) 2-109
firing 2-109
firing mount 2-109
holster 2-111
loading 2-109
signal flare ammunition 2-111
signals and flares used, general precautions in handling 2-111
Pyrotechnics 1-7,2-109

R

Radar equipment, IFF 1-21,9-27
Radar receiver-transmitter, IFF, RT-82/APX-6 9-27
Radiator, heating system, steam 3-88
Radio 1-19,9-1
compartment 2-92
equipment racks 9-1
magnetic indicators 9-20
Power Feeds and Inverter Circuit 12-68
Rack, Main 9-6
servicing procedures, general 9-1
Radio, communication, and navigation wiring diagram list 12-5
Radio, communication and navigation wiring diagrams 12-5
Radio compass
AN/ARN-7 Circuit 12-64
Circuit (Airplanes with Dual AN/ARN-6) 12-65
control head 9-20
equipment, functional test and adjustment 9-22
Radio compass (ADF) equipment 1-20,9-19
Junction Box (Airplanes with Dual AN/ARN-6 Radio) 9-7
operational checkout 9-19
trouble shooting 9-19
Radio operator
chair 2-98
Station 9-28
table 2-98
Ram and ram-nonram type systems, air filters 4-95
Ram filtered-type system 4-88
Ram Filter-Type Airscoop 4-88
Ram-nonram
Assembly, Electrically Operated 4-91
Assembly, Manually Operated 4-94
filter-type (electrical) system 4-90
filter-type (manual) system 4-93
Ram-nonram type
actuating cylinder (hydraulic) 4-90
Airscoop 4-89
system (hydraulic) 4-88
Ram-type system 4-88
Ratings, engine 5-1
Rear case, engine 4-43
Receiver dynamotor, Y-22A-AN/ARC-3 9-4
Receivers
liaison, BC-348 9-25
marker beacon, BC-1333 9-29
VHF, R-77AN/ARC-3 9-4
VOR navigation, R-252/ARN-14 9-14
Receiver-transmitter, VHF, AN/ARC-3 1-20
Refueling, defueling 6-23
Regulator End, Removal 3-27
Regulators
generator voltage 8-28
generator voltage, inspection and maintenance 8-29
heating system pressure, steam 3-92
hydraulic fluid pressure 7-52
*hydraulic system pressure 3-25,3-29
*hydraulic system pressure, test procedure 3-29,3-31
oxygen system demand, low-pressure 3-157
Schematic Hookup for Testing, out of Airplanes 3-31
steam heating system pressure, test before installation 3-92
voltage 1-19
Relay box, fire detection 8-76
Relays
battery connector 8-22
battery connector, test before installation 8-22
General Electric Reverse-Current 8-31
generator reverse-current 8-29
Leece-Neville Reverse-Current 8-31
overvoltage 8-32
parapack control 8-84
propeller feathering 8-71
reverse-current 8-31
reverse-current, functional test and adjustment of generator 8-30
starter 8-69
Westinghouse Reverse-Current 8-32
Removal of engines, reasons 5-40
**Replenishment Diagram* 2-29,2-32
Reservoir, hydraulic system fluid 3-32
Reservoir, test procedure for hydraulic system fluid.... 3-33
Resistor, generator equalizing 8-33
Rocker arms and covers, engine 4-30
Rocker-box
drain sump 4-66
Drain Sump and Front Scavenge Pump 4-68
Drain System — Early Engines 4-69
Rubstrips, fairleads 11-5
Rudder 1-22,11-9
brake pedal, adjustment 10-28
Brake Pedal Adjustment Mechanism 3-76
Controls 11-7
hoisting 2-2
Pedal Mechanism 11-9
Sling (K-10901) 2-67
Stop — Cable Attachment 2-85
Travel Measurement 11-11
Rudder control system 1-22,11-6
operational test and adjustment 11-11
trouble shooting 11-6
Rudder trim tab 1-22
Rudder Trim Tab Controls 11-13
Rudder trim tab system 11-12
operational test and adjustment 7-36
operational test and checkout 7-36
trouble shooting 7-36
Rudder trim tab indicator 7-36
operational test and adjustment 11-12
trouble shooting 11-12

Italics indicate illustrations.
**Indicates items discussed under two or more airplane effectivity groups.*

Section and Page No.

S

Safety Belt Installation 2-113
Safety belt rings 2-112
Safety belts 2-112
Safety latch
Assembly, Mechanical 10-14
Control Handle, Mechanical 10-14, 10-25
Operation of Mechanical 10-13
System, Mechanical 10-11
system, mechanical 1-21, 10-12
Torque Tube and Control Valve Mechanism, Mechanical 10-15
Seats
cabin 2-106
check-pilot's 2-106
pilots' 2-97
Wired in Up Position, Personnel 6-24
Selector Valve Control 6-9
Servicing 2-22
airplane 1-5
anti-icing and de-icing systems 2-30
batteries 2-28
hydraulic system 2-28
landing gear tires 10-31
low-pressure constant-flow oxygen system 3-160
low-pressure demand oxygen system 3-153
main gear shock strut 10-8
oil tanks 2-26
oxygen tanks and portable cylinders 2-34
procedures, radio, general 9-1
shock struts 2-30
steam heating system 2-35
tail wheel shock absorber strut 10-40
tires 2-28
with fuel 2-21
Servo Unit 7-54
Servo unit 7-53
Servo Unit Installed 7-55
Shipping container, engine 4-127
Shipping Container, Removing or Replacing Upper Half 4-127
Shock absorber strut, tail wheel 1-22, 10-38
Shock strut
main gear 1-21, 10-7
main gear, test procedure 10-8
restraining link assembly 2-8
Restraining Link, Installing 2-9
Restraining Links Installed, Two 2-10
Restraining Links Stowed 2-11
servicing 2-30
Shoring methods 2-10
Signal
Circuit, Attendant 12-77
circuit, attendant 8-85
flare ammunition for pyrotechnic pistol (M-8) 2-111
flare container 2-111
light, interaircraft 8-51
Signals 2-111
Signals and flares used in pyrotechnic pistol (M-8), general precautions in handling 2-111
Signals, cartridge (paper and brass) — type 2-111
Signals, rimless (aluminum) — type 2-111
Ski
angle of incidence, test and adjustment of main 10-61
limiting cables, test and adjustment of main 10-62
retracting mechanism, main 10-49
retracting mechanism, main, testing 10-61
Ski rigger
tail 10-49
tail, cleaning 10-53
tail, lubrication 10-53
tail, test and adjustment 10-62
Ski riggers, main 10-49
Skis
airplane 10-42
main 10-42
Main and Tail 10-43
tail 10-43
Sling
Attached to Fuselage Fitting 2-3
Cable Attached to Outer Wing Panel 2-4
Lifting Propeller in Horizontal Position, Three-Loop 2-6
Lifting Propeller in Vertical Position, Two-Loop 2-6
Solenoids
engine primer 6-22
landing gear safety 8-52
oil dilution 6-21
Solenoid valve, oil dilution 4-77
Spanner (Half-Moon) Square Drive Wrenches (K-26409, K-26410, K-26413, K-26414) 2-60
Spark plug copper runout 5-59
Spark Plug Precautions 5-43
Spark plugs 1-15, 4-104, 5-35
Special tools and equipment 2-35
Spreader Attachment of Fuselage Sling 2-3
Stabilizers
hoisting horizontal 2-2
hoisting vertical 2-2
horizontal 1-1, 2-76
vertical 2-85
Generator Crowfoot Wrench (K-32308) 2-57
Induction Vibrator Circuit 12-50
relay 8-69
Starter and Generator Brace Installation 4-145
Starters winterization 2-119
Starter system 1-15
operational checkout 8-68
trouble shooting 8-68
Starting system 4-106, 8-68
Static system, test 7-42
Station Diagram 1-3
Steam heating system, servicing 2-35
Stowage Location of Emergency and Miscellaneous Equipment 2-114
Stowage of Loose Items 2-22
Strainer, oil 4-57
Strap Wrench (K-30503) 2-58
Suction Line Drain Modification 2-117
Sump, oil, main 4-66
Sump, rocker-box drain 4-66
Surface-control locks, off neutral 2-113
Surge protection valve 4-74

Italics indicate illustrations.

Section and Page No.

S (Cont'd)

Surge Protection Valve—Type D-8 4-76
Surge Valve Installed on Firewall 4-75
Switch assembly, landing gear safety, adjustment 8-54
Switch box, parapack auxiliary 8-84
Switches
battery, master 8-23
generator main line 8-33
ignition 8-68
landing gear safety 8-53
landing gear warning circuit downlock, adjustment 8-55
landing gear warning circuit selector valve, adjustment 8-56
landing gear warning circuit limit 8-55
landing gear warning circuit limit, adjustment 8-55
landing gear warning circuit throttle 8-54
landing gear warning circuit up-limit, adjustment .. 8-56
landing gear warning throttle, adjustment 8-55
propeller feathering 8-70
propeller feathering pressure cutout 8-72
Systems
a-c power 8-35
actuating assembly, windshield wiper 3-164
air vacuum 7-55
analysis 5-11
anti-icing 1-11,3-129
autopilot 1-21,7-45
battery 1-19,8-18
carburetor air induction 1-13,3-164,4-85
carburetor anti-icing 3-137
cowl flap hydraulic 3-46
de-icing 1-11,3-109
electrical 1-19,8-1
engine fuel pressure indicating 1-19,7-34
engine ignition 1-15
engine manifold pressure 1-15
engine oil-pressure indicating 1-18,7-33
engine primer 1-15,4-95
exhaust 4-104
fire extinguisher 1-11,3-142
five cylinders, oxygen, low-pressure demand 3-151
flight control 1-22
fuel 1-16,6-1
fuel feed 6-7
fuel pressure indicating 6-21
fuel quantity indicating 6-23
generator 1-19,8-23
generator, paralleling adjustment 8-34
heating and ventilating 1-7,3-80
*heating and ventilating, hot air 1-7,3-102,3-103
heating and ventilating, steam 1-7,3-81
hot fuel priming 4-76
hydraulic 1-11,3-1
hydraulic brake 3-70
hydraulic pressure indicating 1-18,7-34
ignition 4-98,8-66
instrument lights 8-50
instrument lights, fluorescent 8-50
interphone 1-20
interphone, AN/AIC-3 9-31
interphone, RC-36B 9-32
landing gear hydraulic 3-63
landing gear position indicating and warning 1-22,10-20
latch control, adjustment 10-16
lighting 8-39
light, reading 8-51
main ski hydraulic 10-49
manifold pressure 4-98
manifold pressure indicating 1-18,7-32
oil 1-16,4-46
oxygen 1-18,3-147,7-45
oxygen, low-pressure constant-flow 3-159
oxygen, low-pressure demand 3-151
oxygen, purging 3-162
pitot-static 1-18,7-41
position indicating 7-35
power distribution 8-12
pressure indicating 7-33
propeller 4-111
propeller anti-icing 1-11,3-138
ram and ram-nonram type, air filter 4-95
ram filtered-type 4-88
ram-nonram filter-type (electrical) 4-90
ram-nonram filter-type (manual) 4-93
ram-nonram type (hydraulic) 4-88
ram-type 4-88
reading light 8-51
rudder control 1-22
safety latch, mechanical 1-21,10-12
starter 1-15
starting 4-106,8-68
static, test 7-42
tachometer 1-18,7-31
temperature indicating 1-18,7-38
temperature indicating, free air 1-18,7-38
three cylinders, oxygen, low-pressure demand 3-153
vacuum 1-18,7-42
warning 8-75
windshield anti-icing 1-11
windshield and carburetor anti-icing 3-132
windshield wiper 3-162
wing flap 11-5
wing flap hydraulic 3-51
wing flap hydraulic system indicating 3-62
wiring charts 2-113

T

Tacan 12-74
Tacan/Vor Switching 12-71
Circuit 12-27

Circuit 12-27

Tachometer system 1-18,7-31
operational test and checkout 7-31
trouble shooting 7-31
Tail
compartment 2-94
cone 2-94
Hoist Hooked to Permanent Fitting 2-4
Jack Cone Installed 2-11
section, jacking 2-9
ski 10-43
Ski Rigger 10-51
ski rigger 10-49
stand 2-10
Stand Installed, Collapsible 2-12
Tow Bar in Use 2-14
Tailpipe, exhaust 4-106
Tail wheel 1-22,10-34
Axle, Removing 10-36
bearings, adjustment 10-37
fork 10-37

Italics indicate illustrations.

*Indicates items discussed under two or more airplane effectivity groups.

Section and Page No.

T (Cont'd)

Tail wheel *(Continued)*
locking mechanism 1-22,10-40
locking mechanism, adjustment 10-42
Shock Strut Packing Gland Nut Wrench (K-20501) 2-55
Spindle Ball End Spanner Wrench (Service Tool No. K20801), Use 10-36
Spindle Ball End Wrench (K-20801) 2-49
Spindle Cap Wrench (K-20901) 2-50
Spindle Cap Wrench (Service Tool No. K20901), Use 10-36
tire 10-37
Tail Wheel Gear 10-33
Tail wheel gear 1-22,10-1,10-31
Installation 10-35
Installation, Looking Aft 10-34
Tail wheel lock
Cable System 10-40
Lever 2-15
Mechanism 10-39
Tail wheel shock absorber strut 1-22,10-38
Assembly 10-37
Interior Packing Gland Wrench (Service Tool No. K20501), Use 10-38
Packing Nut Spanner Wrench (Service Tool No. K26413), Use 10-38
servicing 10-40
Tank
drinking water 2-104
Main Water, Installed 3-90
piping, drinking water 2-104
propeller anti-icing system supply 3-138
Selector Valve Installed 6-8
unit, fuel quantity 8-73
*washing water 2-103,2-106
Tanks
alcohol 1-5
heating system water supply, steam 3-86
oil 4-69
Tanks, fuel
capacity 2-24
draining 6-23
filling 6-23
location 2-23
main and auxiliary 6-5
number 2-23
Taxiing for ground handling 2-12
Temperature circuit, free air 8-85
Temperature considerations 2-35
Temperature indicating system 1-18,7-38
carburetor air 7-39
carburetor air trouble shooting 7-39
engine cylinder 1-18,7-40
engine cylinder trouble shooting 7-41
engine oil 1-18,7-39
engine oil trouble shooting 7-39
free air 1-18,7-38
free air, funtional test and adjustment 7-38
free air, operational test and checkout 7-38
free air trouble shooting 7-38
Terminal connectors 1-25
Test
automatic radio compass 9-22
cylinder compression 5-22
hydraulic system 3-8
oxygen system, leakage 3-162

Italics indicate illustrations.
Indicates items discussed under two or more airplane effectivity groups.

Section and Page No.

Test after installation
de-icing boots 3-129
de-icing system distributor valve 3-119
de-icing system vacuum pump 3-115
hot air heating and ventilating system carbon monoxide indicator 3-109
hot air heating and ventilating system controls and valves 3-107
*hot air heating and ventilating system electric defrosting blower 3-103,3-107
hot air heating system controls and valves 3-100
propeller anti-icing system pump 3-140
steam heating system air eliminator 3-91
Test and adjustment
airplane skis 10-61
main ski angle of incidence 10-61
main ski limiting cables 10-62
tail ski rigger operation 10-62
Test before installation
de-icing system oil separator 3-115
de-icing vacuum pump 3-113
hot air heating and ventilating system carbon monoxide indicator 3-108
landing gear hydraulic compensator 3-70
propeller anti-icing system supply tank 3-138
steam heating system pressure regulator 3-92
windshield anti-icing system supply tank 3-132
Testing main ski retracting mechanism 10-61
Testing of low-pressure oxygen system valves 3-157
Test procedure
check valve 3-40
cowl flap actuating cylinders 3-50
*cowl flap control valve 3-48,3-49
disconnect valve 3-39
hydraulic brake system check valve 3-78
hydraulic brake system control valve 3-73
hydraulic control panel 3-17
hydraulic filter 3-46
*hydraulic hand pump 3;37,3-38
hydraulic system fluid reservoir 3-33
hydraulic system pressure accumulator 3-24
*hydraulic system pressure regulator 3-29,3-31
hydraulic system pressure relief valve 3-33
landing gear actuating cylinder 3-69
wing flap control valve 3-56
wing flap hydraulic system actuating cylinder 3-59
wing flap hydraulic system relief valve 3-60
Thermostatic valve 4-75
Throttle controls 4-4
Throttle Control System 4-2
Time-Rite Indicator 5-30
Time-rite indicator, crankshaft position by use of, establishing 5-37
Time-rite indicator, location of spark advance position 5-30
Timing and Synchronizing Magnetos 5-29
Tire Inflation Chart 10-32
Tires and tubes for cold weather operation 2-123
Toilet, chemical disposal-type 2-100, 2-105

Torque
Calculating with Hand Scales 2-90
loads, BT-nut 2-92
loads, fitting installation, and B-nut installation in windshield wiper system 3-164
recommendations in inch-pounds for nuts, bolts, and screws, power plant, general 4-2
Table, Illustrated 1-12
values 8-2
values, bolt, power plant 2-89
values for power plant installa[illegible] T-nut ..... [illegible]

T (Cont'd)

	Section and Page No.
Torquing nut with ordinary wrench	2-89
Tow Bar to Tail Wheel Axle, Attaching	2-14
Towing	1-5,2-11
Towing from Front, Arrangement	2-13
Towing from Front, Attachments	2-14
Transmitter	
dynamotor, DY-21A/ARC-3	9-9
gyro flux gate using test, adjusting compensating mechanism	7-26
power supply, VHF receiver, AN/ARC-3	9-9
VHF, T-67/ARC-3	9-9
Transmitter-receiver	
control unit, UHF communication, C-626/ARC-27	9-23
T-67/ARC-3	1-20
UHF communication, RT-178/ARC-27	9-23
Transmitting equipment, liaison, T-47A/ART-13	9-25
Traps, heating system steam	3-92
Trim tab	
aileron	11-28
Controls on Pedestal	11-20
Drum Cable Locking Clamp	11-11
Drum Taping Procedure	11-10
system, elevator	11-19
system, rudder	11-12
Trouble shooting	8-3
a-c power system	8-35
aileron control system	11-21
aileron trim tab	11-28
aileron trim tab indicator	7-35
airplane skis	10-43
airspeed indicator	7-5
altimeter	7-6
AN/AIC-3 interphone system	9-32
anti-icing and de-icing circuits	8-59
anti-icing system	3-129
attitude indicator	7-17
autopilot system	7-50
battery system	8-18
carburetor air induction systems	4-85
carburetor air temperature indicating system	7-39
de-icing pressure system	7-35
de-icing system	3-109
directional indicator	7-16
elevator control system	11-14
elevator trim tab indicator	7-36
elevator trim tab system	11-19
engine cylinder temperature indicating system	7-41
engine fuel pressure indicator	7-34
engine oil pressure indicating system	7-33
engine oil temperature indicating system	7-39
free air temperature indicating system	7-38
fuel quantity circuit	8-73
fuel system	6-1
generator system	8-26
glide slope equipment	9-26
gyro flux gate compass system	7-21
heat and vent circuits	8-63
*hot air heating and ventilating system	3-102,3-105
hot air heating system	3-95
hydraulic pressure indicating system	7-35
hydraulic system	3-8
IFF radar equipment	9-27
instrument systems	7-1
landing gear	10-3
landing gear circuits	8-52
lighting system	8-40
magnetic compass	7-18
manifold pressure indicating system	7-32
oil temperature circuit	8-57
oxygen system	3-147
pitot-static system	7-41
propeller feathering circuit	8-70
propeller system and controls	4-111
radio compass (ADF) equipment	9-19
remote-indicating magnetic compass	7-18
rudder control system	11-6
rudder trim tab indicator	7-36
rudder trim tab system	11-12
starter system	8-68
steam heating and ventilating system	3-82
tachometer system	7-31
turn-and-slip indicator	7-14
vacuum system	7-44
vertical velocity indicator	7-8
VHF communications equipment	9-2
VOR navigation equipment	9-12
warning systems	8-75
windshield wiper system	3-162
wing flap indicator	7-37
wing flap system	11-5
Turnbuckle Safetying Procedure	11-3

U

	Section and Page No.
UHF antenna, AT-256/ARC-27	9-23
UHF command communication equipment	1-20,9-23
functional test and adjustment	9-24
operational checkout	9-23
UHF communication	
AN/ARC-27 Circuit	12-70
transmitter-receiver control unit, C-626/ARC-27	9-23
transmitter-receiver control unit, pilot's, C-628/ARC-27	9-23
transmitter-receiver, RT-178/ARC-27	9-23
Universal Tail Stand (K-12402)	2-62
Urinal	2-100

V

	Section and Page No.
Vacuum	
air filter	7-44
check valves	7-44
manifold	7-44
Pump (Cutaway View)	3-114
Pump Installed	3-113
pumps	7-44
relief valve	7-44
Vacuum system	1-18,7-42
Air Filter	7-45
Instruments and Autopilot	7-43
Relief Valve	3-112,7-45
trouble shooting	7-44
Valve	
Action (C-47 Airplanes), Typical Check	3-156
Adjusting Table	5-39
Clearances, Adjusting	4-37
control heating system shutoff, steam	3-90
indicator, adjustment of crossfeed	6-11
indicator, fuel tank selector, adjustment	6-9
system maintenance	5-36
winterization, air	2-119
winterization, surge	2-116
Valves	
airspeed	4-37
	7-56

Italics indicate illustrations.
*Indicates items discussed under two or more airplane effectivity groups.

	Section and Page No.
W (Cont'd)	
*Windshield defrosting shields, heating and ventilating system, hot air	3-103, 3-107
Windshield defrosting shields, heating system, steam	3-93
Windshields, heating system emergency defroster, hot air	3-100
Windshield wiper, hydraulic	1-13
Windshield Wipers Installed	3-163
Windshield wipers winterization	2-120
Windshield wiper system	3-162
actuating assembly	3-164
needle control valve	3-164
torque loads, fitting installation, and B-nut installation	3-164
trouble shooting	3-163
Wind Velocities in Knots	2-16
Wing	1-5, 2-46
Attachment of Outer	2-81
center	2-55
covers	2-20
empennage de-icing winterization	2-120
Fairing, Removal of Outboard	2-80
Jack Installed	2-8
Jack Pad and Two Auxiliary Lifting Points	2-8
junction boxes, center	8-15
junction boxes, outer	8-15
Moored	2-19
panels, hoisting, outer	2-1
panels, outer	2-48
Stand Installed	2-12
Tip, Installation of Predrilled	2-82
tips	2-54
Wing flap	
Control Valve, Timing	3-56
Operating Tube Union	2-80
orifice check valve	3-61
Relief Valve Assembly	3-61
Relief Valve Assembly (Disconnect Locations Indicated), Removal	3-61
Travel Measurement	11-6
Wing flap actuating cylinder	
**Assembly*	3-58, 3-59
Dash-Pot Wrench (K-22101)	2-54
Installed	3-57
Piston Rod Packing Nut Wrench (Service Tool No. K20001)	3-60
Wing Flap Hydraulic System	3-53
Wing flap hydraulic system	1-11, 3-15
actuating cylinder	3-57
Bypass Flow	3-55
control valve	3-52
indicating system	3-62
Normal Flow	3-54
relief valve	3-60
Wing Flap Indicator	3-62
Wing flap indicator	7-37
functional test and adjustment	7-38
operational test and checkout	7-37
trouble shooting	7-37
Wing flaps	1-22
Wing flap system	11-5
operational test and adjustment	11-5
trouble shooting	11-5
Wings	1-1
Winterization	2-116, 7-1
actuators and valves packing	2-119
airplane markings	2-123
alcohol spray	2-120
anti-icing	2-120
autopilot	2-123
cable tension	2-121
carburetor heat and alcohol anti-icing systems	2-116
cargo compartment	2-119
control system	2-121
crew compartment	2-119
defroster blower	2-120
directional indicator	2-123
electrical flight instruments	2-121
electrical system	2-119
filter	2-119
flight and navigation system	2-121
flight compartment and cabin heat	2-119
fuel strainer	2-116
fuel system	2-116
fuel tank drain sump	2-116
gage, pressure	2-118
ground preheat	2-118
hydraulic system components	2-118
immersion heaters	2-116
lubrication, general	2-123
oil dilution	2-116
oil suction line drain	2-116
oil system	2-116
oxygen hose assemblies	2-121
oxygen system	3-162
parts list for flight instrument	2-122
phase adapter	2-122
power plant, auxiliary	2-119
power plant lubrication	2-116
procedures	1-7
propeller	2-120
starters	2-119
valve, air	2-119
valve, surge	2-116
windshield de-icing and defrosting	2-120
windshield wipers	2-120
wing and empennage de-icing	2-120
Wire identification	1-23, 12-1
Wiring	1-23, 12-2
charts, system	2-113
data	1-23
data, miscellaneous	1-23
identification, original	8-12
information, airplane, general	12-1
repairs, electrical	8-2, 12-2
Wiring diagram list	
electrical system	12-4
instruments	12-4
landing gear	12-5
miscellaneous	12-5
pneudraulics	12-4
power plant	12-4
radio, communication, and navigation	12-5
Wiring diagrams	
book, circuit	2-116
electrical system	12-4
fuel system	12-4
landing gear	12-5
miscellaneous	12-5
pneudraulics	12-3
power plant	12-4
radio, communication, and navigation	12-5

Italics indicate illustrations.

**Indicates items discussed under two or more airplane effectivity groups.*

V (Cont'd)

	Section and Page No.
Valves *(Continued)*	
autopilot emergency shutoff	7-57
blower clutch selector	4-40
blower drain	4-38
carburetor anti-icing system control	3-137
check	3-40,4-75
check, test procedure	3-40
control	4-72
cowl flap control	3-48
cross-feed	6-9
de-icing system auxiliary	3-129
de-icing system check (pressure pipe)	3-115
de-icing system distributor	3-116
disconnect	3-39
fuel tank selector	6-7
fuel tank selector, maintenance, repair, and replacement	6-8
*heating and ventilating system controls, hot air	3-103,3-107
heating system controls, hot air	3-100
heating system, steam	3-92
hydraulic brake system check	3-78
hydraulic system pressure relief	3-33
landing gear control	3-63,10-21
oil dilution solenoid	4-77
oil emergency shutoff	4-78
oil pressure relief	4-63
oil strainer bypass	4-62
oxygen system check, low-pressure	3-156
oxygen system filler, low-pressure	3-157
oxygen system, low-pressure	3-156
oxygen system shutoff, low-pressure	3-156
pressure relief	4-74
propeller anti-icing system shutoff	3-141
pump-to-pressure accumulator shutoff, hand	3-38
surge protection	4-74
thermostatic	4-75
vacuum check	7-44
vacuum relief	7-44
windshield and carburetor anti-icing system control needle	3-136
windshield and carburetor anti-icing system relief	3-136
windshield anti-icing system shutoff	3-132
windshield wiper system needle control	3-164
wing flap hydraulic system control	3-52
wing flap hydraulic system relief	3-60
wing flap orifice check	3-61
Vertical and Horizontal Stabilizers	2-84
Vertical Stabilizer, Installation	2-86
Vertical Stabilizer Sling (K-10701)	2-66
VHF	
Communication — AN/ARC-3 Circuit	12-71
Navigation System — AN/ARN-14 Circuit	12-72
receiver and transmitter power supply, AN/ARC-3	9-9
receiver, R-77AN/ARC-3	9-4
receiver-transmitter antenna, AN/ARC-3	9-11
receiver-transmitter, AN/ARC-3	1-20
remote control panel, C-404A/A	9-8
transmitter, T-67/ARC-3	9-9
VHF communications equipment	1-20,9-2
functional test and adjustment	9-11
operational checkout	9-2
trouble shooting	9-2
Vibration analysis	5-11
Vibrator, induction	4-107
VOR navigation	
antenna, ARN-14	9-15
control panel, C-996/A	9-14
receiver indicators, ARN-14	9-14
receiver, R-252/ARN-14	9-14
VOR navigation equipment	1-20,9-11
functional test and adjustment	9-15
operational checkout	9-11
trouble shooting	9-12

W

	Section and Page No.
Walkways	2-21
Warmup procedure	5-5
Warning circuits	
blower	8-81
door-open	8-80
landing gear	8-54
oil and fuel pressure	8-80
Schematic	8-81
Warning horn, landing gear	8-55,10-22
adjustment	10-22
removal and installation	10-22
Warning lights	
*heating and ventilating system thermoswitches, hot air	3-103,3-107
heating system thermoswitches, hot air	3-100
oxygen system, low-pressure	3-159
Warning Signal Circuit, Paratroop	12-82
Warning Sign Circuit, Passenger	12-44
Warning systems	8-75
operational checkout	8-75
trouble shooting	8-75
Washbasin	2-99
*Washbasin	2-102,2-103
Cabinet	2-103
*cabinet	2-103,2-106
*Washing water tank	2-103,2-106
Wheel	
axles, jacking at main	2-10
Bearing and Grease Retainers, Removing	10-24
Brake, Flight	10-30
brake, flight	10-29
Ready for Removal	2-10
Wheels and axles	1-22,10-22
Window, emergency	2-97
Windshield and carburetor	
Alcohol Anti-Icing System Filter	3-134
Alcohol Anti-Icing System Pump	3-136
Anti-Icing System	3-133
anti-icing system	3-132
control needle valve	3-136
drain cock	3-136
electric pump	3-135
fluid filter	3-132
relief valve	3-136
Windshield anti-icing system	1-11,3-132
shutoff valve	3-132
supply tank	3-132
supply tank, test before installation	3-132
Windshield defroster	2-113
blower motor	8-63
blower motor control relay	8-63
**Circuit*	12-16,12-17
circuit	8-63
circuit, operational checkout	8-63
Shield Installed	3-93
Windshield Defrosters	2-116

Italics indicate illustrations.

*Indicates items discussed under two or more airplane effectivity groups.