THIS PUBLICATION IS INCOMPLETE WITHOUT T.O. 1C-5A-1-1

FLIGHT MANUAL

USAF SERIES

C-5A

AIRPLANES

AF33(657)-15053
F33657-71-A-0083
CEI NO. MA0001A
DETAIL SPEC NO. CP40002B
PART NO. 4M00000-101A

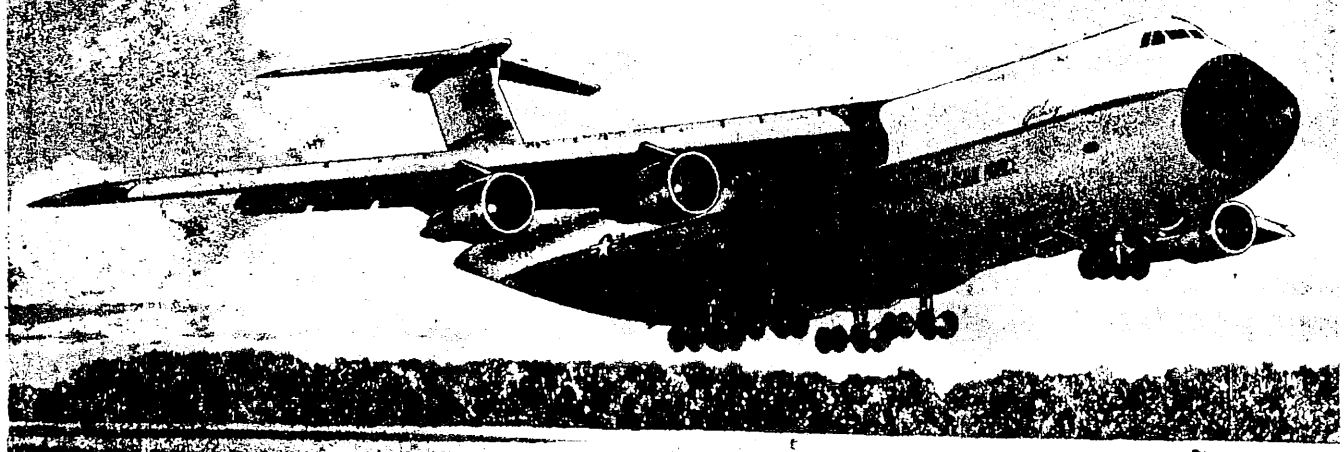

CHANGE NOTICE

LATEST CHANGED PAGES SUPERSEDE THE SAME PAGES OF PREVIOUS DATE

Insert changed pages into basic publication. Destroy superseded pages.

THIS PUBLICATION INCORPORATES SAFETY SUPPLEMENTS T.O. 1C-5A-1SS-81 AND OPERATIONAL SUPPLEMENTS T.O. 1C-5A-1S-79, -80 AND -82.

SEE TECHNICAL ORDER INDEX T.O. 0-1-1-3 AND ITS SUPPLEMENTS FOR CURRENT STATUS OF FLIGHT MANUALS, SAFETY SUPPLEMENTS, OPERATIONAL SUPPLEMENTS AND FLIGHT CREW CHECKLISTS.

COMMANDERS ARE RESPONSIBLE FOR BRINGING THIS PUBLICATION TO THE ATTENTION OF ALL AIR FORCE PERSONNEL CLEARED FOR OPERATION OF SUBJECT AIRPLANE.

PUBLISHED UNDER AUTHORITY OF THE SECRETARY OF THE AIR FORCE

15 JUNE 1973
CHANGE 1 - 7 AUGUST 1973

AIR FORCE 30 OCT. 73 — 3800

LIST OF EFFECTIVE PAGES (CONT)

INSERT LATEST CHANGED PAGES. DESTROY SUPERSEDED PAGES

Page No.	Change No.
1-291 - 1-294	0
1-295	1
1-296 - 1-298	0
1-299	1
1-300	0
1-301	1
1-302 - 1-319	0
1-320	1
1-320A - 1-320F Added	1
1-321 - 1-323	0
1-324 - 1-328	1
1-329 - 1-330	0
1-331	1
1-332 - 1-339	0
1-340 - 1-341	1
1-342 - 1-349	0
1-350	1
1-351	0
1-352	1
1-353 - 1-372	0
1-373	1
1-374 - 1-419	0
1-420	1
1-420A - 1-420F Added	1
1-421 - 1-422	0
1-423	1
1-424 - 1-434	0
1-435 - 1-440	1
1-441	0
1-442 - 1-446	1
1-447 - 1-450	0
1-451	1
1-452 - 1-461	0
1-462 - 1-463	1
1-464 - 1-513	0
1-514 - 1-518	1
1-519 - 1-526D	0
1-527 - 1-545	0
1-546 - 1-547	1
1-548 - 1-549	0
1-550 - 1-551	1
1-552	0
2-1	1
2-2 - 2-9	0
2-10	1
2-11 - 2-13	0
2-14	1
2-14A Added	1
2-14B Blank Added	1
2-15 - 2-18	0
2-19 - 2-20	1
2-21 - 2-32A	0
2-32B Blank	0
2-33	1
2-34 - 2-35	0
2-36 - 2-39	1
2-40	0
2-41 - 2-43	1
2-44	0
2-45 - 2-48	1
2-49	0
2-50 - 2-51	1
2-52 - 2-54A	0
2-54B Blank	0
2-55 - 2-57	0
2-58 - 2-58A	1
2-58B Blank	1
2-59	0
2-60	1
2-60A	0
2-60B Blank	0
2-61	1
2-62 - 2-63	0
2-64	1
2-64A Added	1
2-64B Added	1
2-65 - 2-71	1
2-72 - 2-74	0
2-75 - 2-76	1
2-77 - 2-83	0
2-84	1
2-84A	0
2-84B Blank	0
2-85	1
2-86	1
2-87 - 2-89	0
2-90	1
2-91	0
2-92	1
2-93 - 2-94A	0
2-94B Blank	0
2-95 - 2-98	0
2-99	1
2-100 -2-100A	0
2-100B Blank	0
2-101 - 2-113	0
2-114	1
2-115 - 2-133	0
2-134 - 2-135	1
2-136 - 2-137	0
2-138 Blank	0
3-1	0
3-2 - 3-3	1
3-4 - 3-14	0
3-15	1
3-16 - 3-20	0
3-20A	1
3-20B - 3-20C	0
3-20D Blank	0
3-21 - 3-26	0
3-27 - 3-28	1
3-28A	0
3-28B Blank	0
3-29	0
3-30	1
3-31 - 3-33	0
3-34	1
3-35 - 3-36	0
3-36A - 3-36F	1
3-37 - 3-66B	0
3-67	1
3-68	0
3-69 - 3-70	1
3-71 - 3-108	0
3-109	1
3-110	0
3-111 - 3-112	1
3-112A	1
3-112B Blank	1
3-113 - 3-116	0
4-1 - 4-13	0
4-14	1
4-14A	1
4-14B Blank	1
4-15 - 4-21	0
4-22 - 4-23	1
4-24 - 4-31	0
4-32 - 4-33	1
4-34 - 4-36	0
4-37	1
4-38A Added	1
4-38B Blank Added	1
4-39	1
4-40 - 4-46	0
4-47 - 4-48	1
4-48A	1
4-48B Blank	1
4-49	1
4-50 - 4-52	0
5-1 - 5-4	0
5-5 - 5-6	1
5-6A	0
5-6B Blank	0
5-7 - 5-8	1
5-9	0
5-10	1
5-11	0
5-12	1
5-12A Added	1
5-12B Blank Added	1

* The asterisk indicates pages changed, added, or deleted by the current change.

LIST OF EFFECTIVE PAGES (CONT)

INSERT LATEST CHANGED PAGES. DESTROY SUPERSEDED PAGES.

Page No.	Change No.	Page No.	Change No.	Page No.	Change No.
5-13	1				
5-14	0				
5-15	1				
5-16	0				
5-17 - 5-18	1				
5-19 - 5-21	0				
5-22 - 5-24	1				
5-25	0				
5-26 Blank	0				
6-1 - 6-4	0				
7-1 - 7-16	0				
Index-1	0				
Index-2 - Index-3	1				
Index-4	1				
Index-5	0				
Index-6 - Index-7	1				
Index-8	0				
Index-9 - Index-14	1				
Index-15 - Index-16	0				

* The asterisk indicates pages changed, added, or deleted by the current change.

FLIGHT MANUAL, SAFETY SUPPLEMENT, OPERATIONAL SUPPLEMENT, AND TOPS STATUS

A status page is published with each Safety Supplement, Operational Supplement, TOPS, Flight Manual Change, and Flight Manual Revision. It provides a comprehensive listing of the current Flight Manual, Flight Crew Checklist, Safety Supplements, Operational Supplements, and TOPS. If you are missing any publications listed on this page, see your Publications Distribution Officer and get your copy. This status page replaces the status page in the basic manual following the list of effective pages.

CURRENT FLIGHT MANUAL	DATE	CHANGE NO./DATE
T.O. 1C-5A-1	15 June 1973	1/7 August 1973
T.O. 1C-5A-1-1	27 July 1972	3/7 August 1973

CURRENT FLIGHT CREW CHECKLIST	DATE	CHANGE NO./DATE
T.O. 1C-5A-1CL-1	15 June 1973	1/7 August 1973
T.O. 1C-5A-1CL-2	15 June 1973	1/7 August 1973
T.O. 1C-5A-1CL-3	15 June 1973	1/7 August 1973
T.O. 1C-5A-1CL-4	15 June 1973	1/7 August 1973
T.O. 1C-5A-1CL-5	15 June 1973	1/7 August 1973
T.O. 1C-5A-1CL-1-1	27 September 1973	
T.O. 1C-5A-1CL-2-1	7 August 1973	
T.O. 1C-5A-1CL-4-1	15 June 1973	
T.O. 1C-5A-1CL-4-2	15 June 1973	

CURRENT SAFETY AND OPERATIONAL SUPPLEMENTS AND TOPS

NUMBER	DATE	SHORT TITLE	FLIGHT MANUAL SECTIONS AFFECTED
✓S-75	8 June 1973	Airplane 68304 Configuration	Front Matter
✓S-76	8 June 1973	Airplane 68306 Configuration	Front Matter
✓S-83	3 August 1973	Landing Gear Inflight Troubleshooting	I
✓S-84	16 August 1973	IDNE Temperature Conditions	I, VII
✓S-85	20 August 1973	NLG Gear Shifter Operation	I
✓S-86	27 August 1973	Loadmaster's Checklist	IV
✓S-87	31 August 1973	MLG Extension Time	I
✓S-88	11 September 1973	Inboard Elevator Operation	I, II, III, V
✓S-89	14 September 1973	CDPIR Indicator Lights	I
✓S-90	14 September 1973	Main Sump Low Lights	I, III
✓SS-92	27 September 1973	Radar Altimeter Setting Procedure	II
S-94			
S-96			
S-98			
S-99			
S-100			

REPLACED/RESCINDED SUPPLEMENTS AND TOPS

NUMBER	DATE	DISPOSITION
None		

Reproduction for non-military use of the information or illustrations contained in this publication is not permitted without specific approval of the issuing service. The policy for use of Classified Publications is established for the Air Force in AFR 205-1.

Technical orders are normally distributed promptly after printing. Date(s) shown on the title page (lower right) are for identification only. This is not a distribution date. Processing time sometimes causes distribution to only appear to have been delayed.

LIST OF EFFECTIVE PAGES

INSERT LATEST CHANGED PAGES. DESTROY SUPERSEDED PAGES.

NOTE: The portion of the text affected by changes is indicated by a vertical line in the outer margins of the page. Changes to illustrations are indicated by miniature pointing hands. Changes to schematic and other diagrams are indicated by a numerical grid system. Changes to wiring diagrams are not identified.

Dates of issue for original and changed pages are:

Original . . . 0 . . . 15 June 1973
Change . . . 1 . . . 7 August 1973

TOTAL NUMBER OF PAGES IN THIS PUBLICATION IS 1010 CONSISTING OF THE FOLLOWING:

Page No.	Change No.	Page No.	Change No.	Page No.	Change No.
Title	1	1-95	1	1-199 - 1-201	0
A	1	1-96 - 1-108	0	1-202	1
B - C Added	1	1-109	1	1-202A Added	1
Status Page 1	1	1-110 - 1-117	0	1-202B Added	1
Status Page 2 Blank	1	1-118	1	1-202C - 1-202F Added	1
i	0	1-119 - 1-128	0	1-203 - 1-235	0
ii	1	1-128A Added	1	1-236 - 1-239	1
iii - v	0	1-128B Added	1	1-240 - 1-241	0
vi - ix	1	1-129	1	1-242	1
x	0	1-130 - 1-131	0	1-243 - 1-254	0
1-1 - 1-5	1	1-132 - 1-132A	1	1-255	1
1-6 - 1-14	0	1-132B	1	1-256 - 1-261	0
1-15	1	1-132C Added	1	1-262 - 1-263	1
1-16 - 1-46	0	1-132D Blank Added	1	1-264 - 1-265	0
1-47	1	1-133	1	1-266	1
1-48 - 1-53	0	1-134 - 1-150	0	1-266A	1
1-54	1	1-150A Added	1	1-266B	0
1-55 - 1-59	0	1-150B Blank Added	1	1-267 - 1-276	0
1-60 - 1-61	1	1-151	1	1-277	1
1-62 - 1-80	0	1-152 - 1-186	0	1-278	0
1-81 - 1-82	1	1-187 - 1-188	1	1-279	1
1-83 - 1-91	0	1-189 - 1-197	0	1-280 - 1-289	0
1-92 - 1-93	1	1-198	1	1-290	1
1-94	0				

This publication was prepared to the requirements of the following Specifications:

MIL-M-7700A
MIL-M-38730
MIL-M-4410E

Upon receipt of the second and subsequent changes to this technical order, personnel responsible for maintaining this publication in current status will ascertain that all previous changes have been received and incorporated. Action should be taken promptly if the publication is incomplete.

* The asterisk indicates pages changed, added, or deleted by the current change.

ADDITIONAL COPIES OF THIS PUBLICATION MAY BE OBTAINED BY USAF ACTIVITIES IN ACCORDANCE WITH T.O. 00-5-2.

STANDARDIZATION AND ARRANGEMENT.

Standardization assures that the scope and arrangement of all Flight Manuals are identical. The manual is divided into seven fairly independent sections to simplify reading it straight through or using it as a reference manual.

SAFETY SUPPLEMENTS.

Information involving safety will be promptly forwarded to you by Safety Supplements. Supplements covering loss of life will get to you in 48 hours by TWX, and those concerning serious damage to equipment will reach you within 10 days by mail. The title page and status pages of the Flight Manual and the title block of each Safety Supplement should be checked to determine the effect they may have on existing supplements. You must remain constantly aware of the status of all supplements; current supplements must be complied with, but there is no point in restricting your operation by complying with a replaced or rescinded supplement.

OPERATIONAL SUPPLEMENTS.

Information involving operations will be promptly forwarded to you by Operational Supplements. Supplements covering urgent operational information will get to you in 48 hours by TWX, and those concerning essential information, but of a less urgent nature, will get to you within 10 days by mail. The title page and status pages of the Flight Manual and the title block of each Operational Supplement should be checked to determine the effect they may have on existing supplements. You must remain constantly aware of the status of all supplements - current supplements must be complied with, but there is no point in restricting your operation with a replaced or rescinded supplement.

CHECKLIST.

The Flight Manual contains only amplified checklists. Abbreviated checklists have been issued as separate technical orders. Line items in the Flight Manual and checklists are identical with respect to arrangement and item numbers. Whenever a Safety Supplement affects the abbreviated checklist, write in the applicable change on the affected checklist page. As soon as possible, a new checklist page incorporating the supplement will be issued. This will keep handwritten entries of Safety Supplement information in your checklist to a minimum.

HOW TO GET PERSONAL COPIES.

Each flight crew member is entitled to personal copies of the Flight Manual, Safety Supplements, and Checklists. The required quantities should be ordered before you need them to assure their prompt receipt. Check with your supply personnel; it is their job to fulfill your Technical Order requests. Basically you must order the required quantities on the Publication Requirements Table (T.O. 0-1-1-3). Technical Orders 00-5-1 and 00-5-2 give detailed information for properly ordering these publications. Make sure a system is established at your base to deliver these publications to the flight crews immediately upon receipt.

FLIGHT MANUAL AND CHECKLIST BINDERS.

Looseleaf binders and sectionalized tabs are available for use with your manual. These are obtained through local purchase procedures and are listed in the Federal Supply Schedule (FSC Group 75, Office Supplies, Part I). Binders are also available for carrying your abbreviated checklist. These binders contain plastic envelopes into which individual checklist pages are inserted. They are available in three capacities and are obtained through normal Air Force supply under the following stock list numbers: 7510-766-4268, -4269, and -4270 for 15, 25, and 40 envelope binders respectively. Check with your supply personnel for assistance in securing these items.

DEFINITIONS.

The following definitions apply to the use of the words 'shall," "will," "should," and "may."

shall - Construed to mean that the requirements are binding or mandatory.

will - Used to express a declaration of purpose. This term is used in descriptive material only, not in procedural information.

should - Used to express a non mandatory desire or preferred method of accomplishment and shall be construed as a non mandatory provision.

may - Used to express an acceptable or suggested means of accomplishment and shall be construed as a non mandatory provision.

USE OF NOTES, CAUTIONS, AND WARNINGS.

Notes, CAUTIONS and WARNINGS are used in this manual to emphasize important or critical instructions. The Note, CAUTION or WARNING will always follow the step or procedure to which it applies. The heading used, and the definition of each are as follows:

Note

A Note is used to put special emphasis on a step, procedure, or condition which might otherwise be overlooked or misinterpreted.

CAUTION

A CAUTION is used to emphasize procedures or practices which, if not strictly observed, could result in damage to, or destruction of, equipment.

WARNING

A WARNING is used to emphasize procedures or practices which, if not correctly followed, could result in injury to personnel or loss of life.

USE OF CAPITAL LETTERS AND QUOTATION MARKS.

In Sections I, V, VI and VII of this manual, control or switch positions are identified by the use of capital letters reflecting the identification visible in the airplane, enclosed by quotation marks, and the placarded name of the item is shown in capital letters without quotation marks.

Example:

The throttle is moved to the "START IDLE" position. . . . . .

The unmarked neutral position of certain switches, when mentioned specifically, is identified by capital letters without quotation marks.

Example:

The switch is placed successively in the "NORM" and OFF positions . . . . . .

Exception:

Where system operational procedures are identified in numerical sequence, they will be written in checklist format and the designation used in Sections II, III and IV will apply in order to insure continuity in all checklists.

In Sections II, III, and IV, capital letters enclosed by quotation marks are reserved for spoken responses. Switches and control positions are shown in capital letters without quotation marks, items being operated are shown with initial capital letters only, while the crew member making the spoken response is identified by an abbreviation in parentheses.

Example:

Windshield Heat - "OFF" (CP)

If an item is normally identified by a capitalized abbreviation, such as CADC, MTC, APU, etc., this identification is used.

Example:

APU Control Switch - START

YOUR RESPONSIBILITY TO LET US KNOW.

Every effort is made to keep the Flight Manual current. Review conferences with operating personnel and constant review of accident and flight test reports assure inclusion of the latest data in the manual.

Changes and supplements to this manual will be published when necessary. However, we cannot correct an error unless we know of its existence. In this regard, it is essential that you do your part. Comments, corrections, and questions regarding this manual or any phase of the C-5A Technical Order program are welcomed. They should be forwarded, using an AF Form 847 in accordance with AFR 60-9 through your Command Headquarters to SAAMA/MMEAF, Kelly AFB TX 78241. Critical Hazard Reports should be submitted via message to ASD WPAFB OHIO/YAEY with information addressees of DIR MAT MGT KELLY AFB TEX/MMEAF, MAC/DOVA.

RECORD OF APPLICABLE TIME COMPLIANCE TECHNICAL ORDERS.

T.O. NO.	DATE	TITLE	CHANGE/REVISION/ SUPPLEMENT DATE
1C-5A-501	28 Apr 69	Remote HSI Course and Heading Set Control Panel; Installation of (ECP MA 0001A-98897-410A-0166)	4 Sep 70
1C-5A-503	15 Jun 70	Public Address System, Troop Compartment; Revision to (ECP MA 0001A-98897-410A-0249)	19 Feb 70
1C-5A-650	1 Jan 72	Aerial Refuel Receptacle; Inspection of	4 Sep 70
1C-5A-654	1 Jan 72	Engine Overheat and Fire Detection System; Redesign of (ECP MA 0001A-98897-410A-551)	4 Nov 71
1C-5A-761	1 Jun 71	LORAN Receiver Unit; Redesign of (ECP MA 0001A-98897-410A-667)	4 Nov 71

T.O. NO.	DATE	TITLE	CHANGE/REVISION/ SUPPLEMENT DATE
1C-5A-840	1 Nov 71	Aft Fuselage Stabilizer Struts; Deletion of (ECP MA 0001A-98897-410A-833)	15 Feb 72
1C-5A-842	15 Apr 72	Aft Center Cargo Door Actuator Gearbox; Replacement of (ECP MA 0001A-98897-410A-897)	15 Feb 72
1C-5A-884	15 Oct 71	Crosswind System Computer; Redesign of (ECP MA 0001A-98897-410A-536)	17 Sep 71
1C-5A-917	3 May 71	Aft Fuselage Stabilizer Struts; Electrically Disconnected (ECP MA 0001A-98897-410A-881-78)	4 Dec 70
1C-5A-927	15 Jan 71	Hydraulic Suction Line Fittings; Modification of (ECP MA 0001A-98897-410A-6003)	3 May 71
1C-5A-935	1 Nov 71	High Pressure Oxygen Relief Valve; Installation of (ECP MA 0001A-98897-410A-6037)	4 Nov 71
1C-5A-1021	15 Feb 71	Air Turbine Motor Hydraulic Pump Section Lines Accumulators; Installation of (ECP MA 0001A-98897-410A-6247)	3 May 71
1C-5A-1046	1 Feb 72	Aft Ramp Hydraulic System Check Valve; Addition of (ECP MA 0001A-98897-410A-6019)	8 Sep 72
1C-5A-1053	15 Aug 71	RAT Pressure Line; Added Separate Filter (ECP MA 0001A-98897-410A-6118)	17 Sep 71
1C-5A-1091	1 Jun 72	Trim Compensator System; Deletion of (ECP MA 0001A-98897-410A-864)	3 May 71
1C-5A-1175	15 Oct 71	Chamfered Washers on Pressure Door Hinge Fitting; Installation of (ECP MA 0001A-98897-410A-882-66)	8 Sep 72
1C-5A-1202	1 May 72	Aerial Refueling Receptacle; Modification of (ECP MA 0001A-98897-410A-6295)	3 May 71
1C-5A-1208	15 Sep 72	ADS Extraction Parachute Manual Release System; Modification of (ECP MA 0001A-98897-410A-595)	8 Sep 72
1C-5A-1216	1 Jul 72	Flap/Slat Asymmetry and Brake Warning Light Circuitry; Modification of (ECP MA 0001A-98897-410A-933)	15 Feb 72
1C-5A-1217	1 Jul 71	MLG & NLG Hydraulic Systems Hydraulic Fuses; Addition of (ECP MA 0001A-98897-410A-6121)	3 May 71

T.O. NO.	DATE	DATE	CHANGE/REVISION/ SUPPLEMENT DATE
1C-5A-1231	15 Dec 71	Augmentation Bleed Air Temperature Sensor; Re-identification of (ECP MA 0001A-98897-410A-6153)	17 Sep 71
1C-5A-1232	1 May 72	Pylon/Apron/Cowl Door Seal; Revision to (ECP MA 0001A-98897-410A-980)	2 Nov 71
1C-5A-1234	1 Nov 71	Aft Troop Compartment Ladder; Redesign of (ECP MA 0001A-98897-410A-6203)	25 Aug 71
1C-5A-1239		Forward Ramp Extension Logistic Rail System; Modification of (ECPMA 0001A-98897-410A-919)	7 Aug 73
1C-5A-1251	1 Feb 72	Radar Altimeter; Update of (ECP MA 0001A-98897-410A-6244)	4 Nov 71
1C-5A-1259	1 Nov 72	Visor Door Actuator Brake Corrosion and Roller Failure; Correction of (ECP MA 0001A-98897-410A-898)	15 Feb 72
1C-5A-1262		Hydraulic Control Manifold Covers; Addition/Replacement of (ECP MA-0001A-98897-410A-6193)	
1C-5A-1263	1 Jul 72	Second Emergency Walkaround Oxygen Bottle; Addition of (ECP MA 0001A-98897-410A-6211)	15 Feb 72
1C-5A-1264	15 May 72	Hydraulic Power Transfer Systems; Modification of (ECP MA 0001A-98897-410A-6047)	2 Nov 71
1C-5A-1267		Aft Side Door Bayonet Latch; Modification of (ECP MA 0001-98897-410A-6213)	8 Sep 72
1C-5A-1271	1 May 72	Landing Gear Door Lock System; Revision to (ECP MA0001A-98897-410A-6147)	2 Nov 71
1C-5A-1272	15 Feb 72	Flap Power Package Assembly; Revision of (ECP MA 0001A-98897-6305)	17 Sep 71
1C-5A-1277	1 May 73	Inertial Navigation Equipment; Update of (ECP MA 0001A-98897-410A-807)	14 Jul 72
1C-5A-1282	15 Apr 72	Reconfigured Stallimiter Computer; Installation of (ECP MA 0001A-98897-410A-6353)	4 Nov 71
1C-5A-1285	1 Oct 71	Manual Operating System for the NLG Level Kneel Pad (ECP MA 0001A-98897-410A-6252)	25 Aug 71
1C-5A-1304	15 May 72	Hydraulic Pressure Shutoff Valves; Separation of Electrical Power Source (ECP MA 0001A-98897-410A-6360)	15 Feb 72
1C-5A-1305	1 Oct 72	Winch Remote Control Unit; Modification of (ECP MA 0001A-98897-410A-6235)	15 Feb 72
1C-5A-1306	15 Apr 72	Bailout Warning System Power Source; Revision to (ECP MA0001A-98897-410-6335)	15 Feb 72

T.O. NO.	DATE	TITLE	CHANGE/REVISION/ SUPPLEMENT DATE
1C-5A-1308	1 Nov 72	Go-Around Attitude Subsystem; Reconfiguration of (ECP MA0001A-98897-410A-989)	4 Nov 71
1C-5A-1310	15 Sep 72	AHRU-IDNE-MMR Interfaces; Deletion of (ECP MA0001A-98897-410-6102)	18 Dec 72
1C-5A-1312	1 Mar 72	Manual Locking System for NLG Folding Bulkhead; Addition of (ECP MA0001A-98897-410A-6105)	2 Nov 71
1C-5A-1319	15 May 72	Landing Gear Panel Indicator Lights; Modification of (ECP MA0001A-98897-410A-6359)	15 Feb 72
1C-5A-1324	15 Sep 72	Ground Spoiler Position Indicator; Deletion of (ECP MA0001A-98897-410A-6403)	14 Jul 72
1C-5A-1325	1 Jun 72	Pilots' MMR Weather Display; Rework of (ECP MA0001A-98897-410A-6324)	15 Feb 72
1C-5A-1326	1 Aug 72	Multi-Mode Radar Update (ECP MA0001A-98897-410A-6055)	18 Dec 72
1C-5A-1333	1 Jun 72	Pylon Structure; Revision of (ECP MA0001A-98897-410A-6411)	15 Jun 73
1C-5A-1334	15 Oct 72	Lift Distribution Control System; Installation of (ECP MA0001A-98897-410A-900)	14 Jul 72
1C-5A-1343	1 Jan 73	Stability Augmentation Subsystem Update (ECP MA0001A-98897-410A-594)	18 Dec 72
1C-5A-1345	15 Jul 72	Hydraulic Kneeling System; Installation of (ECP MA0001A-98897-410A-6407)	27 Apr 72
1C-5A-1346	1 Jan 73	Autopilot and AFCS Control Panel Update (ECP MA0001A-98897-410A-836)	18 Dec 72
1C-5A-1347	1 Jan 73	Autopilot Servo Update (ECP MA0001A-98897-410A-6354)	18 Dec 72
1C-5A-1349	1 Jan 73	Autothrottle Subsystem Update (ECP MA0001A-98898-410A-651)	18 Dec 72
1C-5A-1353	1 Jun 72	Pitch Trim Actuator Travel Stop Relocation of (ECP MA0001A-98897-410A-900)	14 Jul 72
1C-5A-1357	1 Dec 72	Aft Center Door Actuation Mechanism Jackscrew; Replacement of (ECP MA0001A-98897-410A-6432)	8 Sep 72
1C-5A-1358	1 Sep 72	Anti-Skid Material Below Static Line Cable; Addition of (ECP MA0001A-98897-410A-6398)	8 Sep 72
1C-5A-1365	1 Nov 72	Wing Loads Monitoring Equipment Loads Recording System; Instl of (SP 232)	29 Sep 72
1C-5A-1376	1 Feb 73	Flight Director System Update (ECP MA0001A-98897-410A-805)	18 Dec 72
1C-5A-1377	1 Nov 72	Electrical Equipment for Flight Loads Recording System; Instl of (SP 232)	29 Sep 72

T.O. NO.	DATE	TITLE	CHANGE/REVISION/ SUPPLEMENT DATE
1C-5A-1377C	13 Jul 73	Electrical Equipment for Flight Loads Recording System: Instl of (SP 6562)	7 Aug 73
1C-5A-1378	1 Jan 73	Landing Gear Loads Monitoring Equipment Flight Loads Recording System; Instl of (SP 232)	29 Sep 72
1C-5A-1381	1 Oct 72	Aerial Refueling Receptacle; Instl of (ECP MA0001A-98897-410A-6482)	29 Sep 72
1C-5A-1387		Fire Suppression System (FSS); Instl of	7 Aug 73
1C-5A-1421	1 May 72	Continuous Flow Oxygen Panel Turn-On Lever Position Decal; Installation of (ECP MA0001A-98897-410A-883-44)	15 Feb 72
1C-5A-1440	15 May 72	IFF Test Set; Installation of (ECP MA0001A-98897-410A-883-39)	15 Feb 72
1C-5A-1441	15 Jun 72	Flap Selector Position Markings; Installation of (ECP MA0001A-98897-410A-883-34)	15 Feb 72
1C-5A-1462	1 Jun 72	Cargo Compartment First Aid Kits; Addition of (ECP MA0001A-98897-410A-883-49)	15 Feb 72
1C-5A-1467	15 Jul 72	Forward Load Control System; Revision to (ECP MA0001A-98897-410A-6437)	27 Apr 72
1C-5A-1475	1 Jun 72	Reading Lights; Modification of (ECP MA0001A-98897-410A-883-94)	27 Apr 72
1C-5A-1476	1 Jul 72	Crew Entry Door Mechanical Lock; Installation of (ECP MA0001A-98897-410A-883-78)	27 Apr 72
1C-5A-1480	15 Jul 72	Spare MADAR Tape Cassette; Provision for Stowage of (ECP MA0001A-98897-410A-883-87)	15 Feb 72
1C-5A-1509	1 Oct 72	Rudder Pedal Disengage System Wire Routing; Revision to (ECP MA0001A-98897-410A-884-14)	27 Apr 72
1C-5A-1546	1 Nov 72	Aerial Refueling Drain Line; Modification of (ECP MA0001A-98897-410A-884-45)	29 Sep 72
1C-5A-1554	1 Jun 73	IWBS Sealing Correction for forward Kneel (ECP MA0001A-98897-410A-6550)	15 Jun 73
1C-5A-1555	15 May 73	DRU Film Pack and Reel; Storage Provisions (ECP MA0001A-98897-410A-6524)	18 Dec 72
1C-5A-1610		Autopilot and AFCS Control Panel Update (ECP MA0001A-98897-410A-836)	18 Dec 72
1C-5A-1613		Flight Loads Recording System; Instl of (SP 6562)	18 Dec 72
1C-5A-1640		Troop Compartment Stair Ladder; Modification of (ECPMA0001A-98897-410A-6610)	7 Aug 73

THE C5A

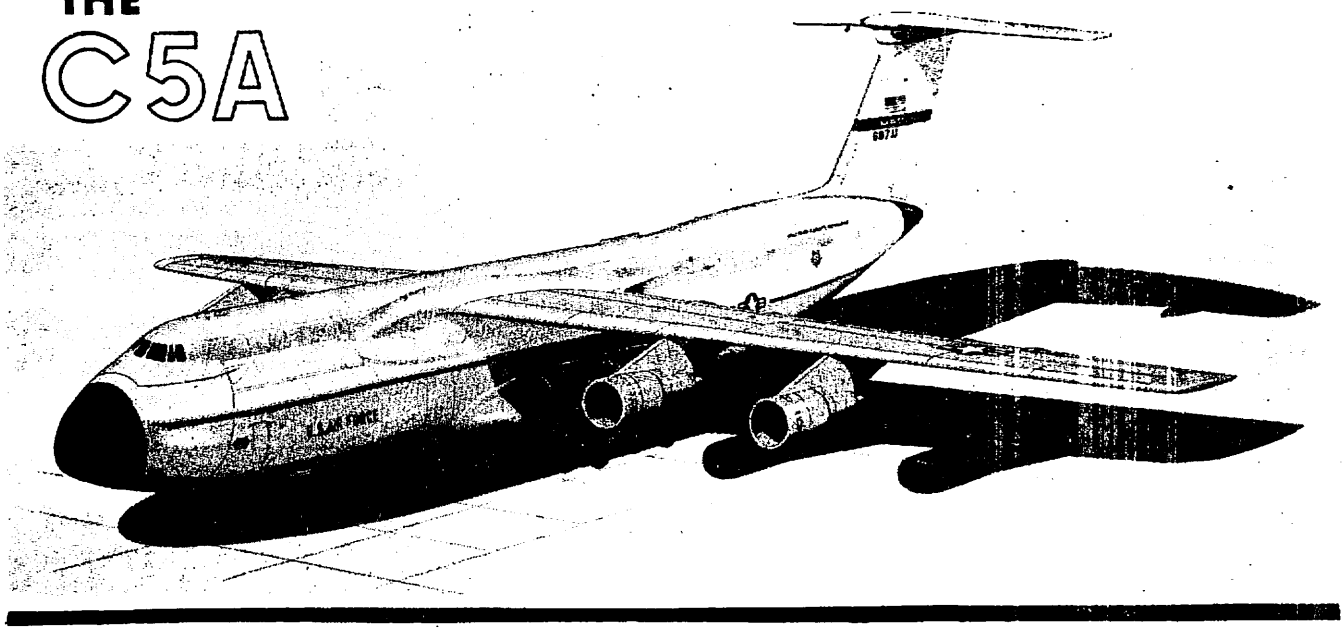

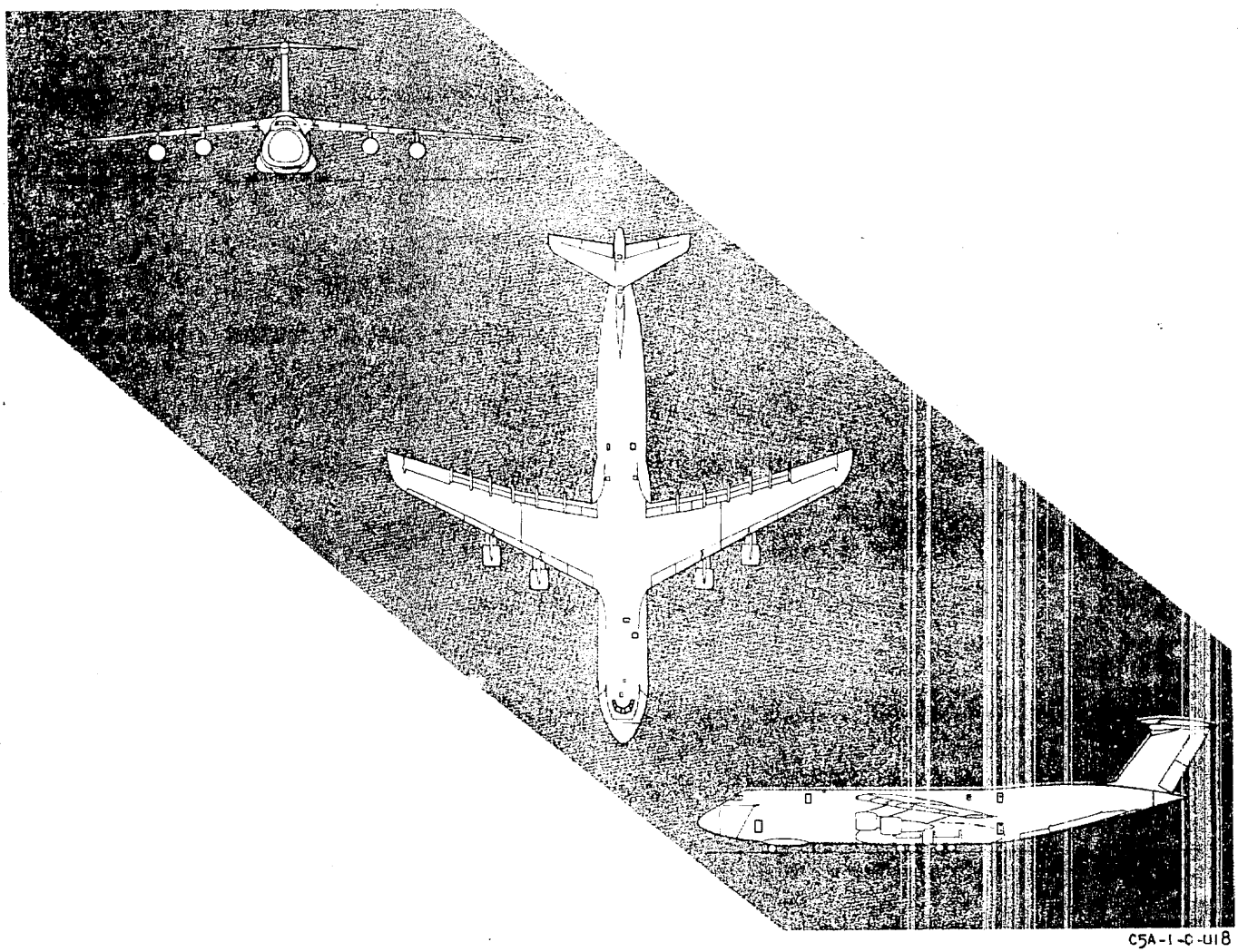

C5A-1-C-U18

ALPHABETICAL INDEX

Subject	Page Number / Figure Number
A	
Abort Procedures	3-25
Acceleration Limitations	5-24
Accelerometer	1-177
Access Area and Inspection Lights	1-169
Accessory Assembly	1-16
Accessory Drive System	1-7
Acknowledgement	4-2
Acknowledging Failure Reports	1-264
AC Load Center Circuit Breaker Panels	F 1-70
AC Loadmeters	1-164
AC Mode Pushbutton	1-258
AC Power Supply System	1-162
AC System Buses	1-163
AC System Controls	1-163
AC System Indicators	1-164
AC Voltmeter, Frequency Meter, and Selector Switches	1-166
ADF Panel	F 1-94
ADF System Controls	1-191
ADF System Indicators	1-191
ADF Systems	1-191
ADS - Closing	1-300
ADS Controls and Indicators	1-308
ADS Equipment	1-308
ADS Extraction Parachute System	1-308
ADS Normal Operation	1-312
ADS - Opening for Drop Sequence	1-300
ADS - Preparation-Pressure Door Open	1-299
A/DVM Offset Control Knob	1-258
Aerial Delivery (CARP)	1-205
Aerial Refuel Boom Disconnect Lights	1-135
Aerial Refuel Boom Latch Lights	1-135
Aerial Refuel Boom Latch Switch	1-134
Aerial Refuel Disconnect Buttons	1-135
Aerial Refuel Door Not Locked Light	1-135
Aerial Refuel Door Switch	1-134
Aerial Refuel Electric Power Switch	1-134
Aerial Refuel Isolation Valve Switches	1-134
Aerial Refuel Ready Lights	1-135
Aerial Refuel Receptacle Flood Lights	1-135
Aerial Refuel Slipway Door Manual Operation	1-135
Aerial Refuel System	1-134
Aerial Refuel System Controls	1-134
Aerial Refuel System Indicators	1-135
Aerial Refuel System Limitations	5-17
Aerial Refuel System Normal Operation	1-135
Aerial Refueling Slipway Lights	1-169
AFCS Normal Operation	1-115
Aft C.G.	5-24
Aft Cargo Door and Ramp System	1-285
Aft Cargo Door and Ramp System Operation and Sequencing Procedures	1-287
Aft Cargo Doors	1-286
Aft Cargo Doors Arming Switch	1-308
Aft Cargo Doors and Ramp System Controls	1-286
Aft Cargo Door System Limitations	5-23
Aft Center Cargo Door and Ramp Inflight Operation	1-309
Aft Main Gear Castering System	1-76
Aft Main Gear Castering System Controls and Indicators	1-76
Aft Ramp	1-285
Aft Ramp and Pressure Door Area	2-56
After Entering the Airplane	7-16
After Gear Retraction	3-116
After Landing	7-14, 2-120, 4-36, 4-50
After Landing Briefing	4-50
After Loading	4-47
After Take-off	7-14
After Take-off Climb	2-91, 3-113, 3-116, 4-16
After Take-off, Climb, and Cruise	1-34
AHRU Controls and Indicators	1-226
AHRU Modes of Operation	1-227
AHRU Normal Operation	1-228
AHRU Operational Characteristics	1-228
AHRU Preflight Checks and Grid Heading Adjustment	1-228
Aileron Artificial Feel	1-101
Aileron Centering Procedure	1-99
Aileron Hydraulic Power Switches	1-98
Aileron Hydraulic System Off Lights	1-98
Aileron Pilot Assist Cable Servo Switch	1-101
Aileron Power Light	1-98
Ailerons	1-98, 1-147
Aileron Trim	1-98
Aileron Trim Indicator	1-99
Aileron Trim Knob	1-98
Aileron Trim Selector Switch	1-98
Aileron Trim Slide Bar	1-99
Airborne Radar Approach (ARA)	2-105, 4-34
Air Conditioning Airflow Selector Chart	F 1-25
Air Conditioning Master Switch Position Chart	F 1-24
Air Conditioning Overhead Lights	1-30
Air Conditioning System	1-136, 1-25
Air Conditioning System Controls	1-27
Air Conditioning System Indicators	1-30
Air Conditioning System Master Switch	1-27
Air Conditioning System Normal Operation	1-30
Air Conditioning Units	1-25
Aircrew Visual Inspection	2-9
Air Deflectors	1-307
Airdrop System (ADS)	1-137, 1-307
Airdrop Limitations	5-23
Airflow Distribution Control Switch	1-28
Air Flow Sources	1-25
Airfoil Assembly	1-249
Airfoil Mounting Assembly	1-249
Airplane Dimensions	1-6

ALPHABETICAL INDEX (CONT)

Subject	Page Number Figure Number
Airplane Electrical System	F 1-58
Airplane Fire on the Ground (FSS Installed)	3-20
Airplane Gross Weight	1-6
Airplane, The	1-6
Airspeed Limitations	5-18
Airspeed - Mach Indicator (AMI)	1-245
Air Start	3-33
Air Transportable Loading Dock Taxi Procedures	2-122
Air Turbine Motor (ATM) Pump Switches	1-42
Air Turbine Motor Hydraulic Pumps	1-44
Air Turbine Motors	1-137
Air Turbine Motors (ATM)	1-41
Aldis Lamp Stowage	1-331
Alternate Aerial Refuel Light Switch	1-135
Alternate Caster Procedure	2-79
Alternate Engine Starting Procedure	1-15
Alternate Fuel	5-6
Alternate Fuel Sequence	F 1-55A
Alternate Fuel System Management	1-132B
Alternate Main Landing Gear Retraction Procedure	1-48
Alternate Pitch Trim Switches	1-103
Alternate Pitch Trim Test Knob	1-103
Altitude - Vertical Velocity Indicator (AVVI)	1-246
Anchor Cables	1-306
Angle-of-Attack Vanes De-Icing System	1-39, 1-138
Angle-of-Attack Vanes De-Icing Systems Controls	1-39
Angle-of-Attack Vanes De-Icing Systems Lights	1-39
Annunciator Panel	F 1-128
Annunciator Panels	3-91
Antenna Locations	F 1-82
Antenna Select Panels	F 1-88
Anti-Collision Lights	1-169
Anti-Exposure Suit Stowage Provisions	1-322
Anti-Iced or De-Iced Tubes, Probes, and Vanes Location	F 1-29
Anti-Icing and De-Icing Systems	1-36, 1-137
Anti-Icing System Panels	F 1-28
Anti-Skid System	1-96
Anti-Skid System Failure	3-77
Anti-Skid System Inoperative Procedures	3-113
APU Bleed Air System	1-23
APU Bleed Valve Switches	1-17, 1-24
APU Controls and Indicators	1-17
APU Control Switches	1-17
APU Door Open Lights	1-17
APU Exhaust Gas Temperature (EGT) Indicator	1-17
APU External Power Selector Switch	1-164
APU Fire Detection and Warning System	1-20
APU Fire Handles	1-21
APU Fire Extinguisher Bottle Select Switches	1-21
APU Fire Extinguishing Agent Discharge Buttons	1-21
APU Fire Extinguishing System	1-21
APU Fuel System	1-16
APU Generator Selector Switch	1-164
APU Isolation Valve Open Lights	1-18
APU Isolation Valve Switches	1-17
APU Oil System	1-16
APU On Speed Lights	1-18
APU Operation	1-18
APU Panels	F 1-18
APU Speed Control	1-17
APU Starting System	1-17
APU Start Lights	1-18
Area Microphone Unit	1-250
Armrest Control	1-328, 1-327
Astigmatism Control Knob	1-258
Asymmetrical Flap or Slats Indication	3-101
ATM Limitations	5-10
ATM Oil System	1-42
ATM Operation	1-43
ATM Priority Valve	1-24
ATM Pump Pressure on Lights	1-46
ATM Pump Pressure Valve Open Lights	1-46
ATM Speed Control	1-41
ATM Start Switches	1-42
ATM Switches	1-42
ATM Turbine Section	1-41
A-Trace Gain Control Knob	1-258
A-Trace Vertical Position Adjustment Knob	1-257
ATS Controls	1-115
ATS Lights	1-116
ATS Modes of Operation	1-116
ATS Normal Operation	1-117
Attitude and Heading Reference Units (AHRU)	1-225
Attitude and Heading Reference Unit Panels	F 1-107
Attitude Director Indicator (ADI)	1-242
Attitude Limits Below 200 Feet	5-20
Audible Warning and Alarm Systems	1-320
Audible Stall Warning	1-126
Auto Land Approach	2-103
Automatic Flight Control Subsystem	1-107
Automatic Flight Control System	1-106, 1-139
Automatic Go-Around	2-101
Automatic Loran Fixing Limitations	1-195
Automatic Signal Acquisition Remote Units (SAR-A)	1-254
Automatic Throttle Subsystem	1-116, 1-139
Autopilot	1-107, 1-139
Autopilot Controls and Indicators	1-107
Autopilot Equipment Interface	F 1-50
Autopilot Limitations	5-25
Autopilot Modes of Operation	1-110
Auto Refuel Switch	1-133
Auto-Throttle Limitations	5-25
Auxiliary Intercom Monitor Panels	1-180
Auxiliary Navigation Selector Panels (ANSP)	1-244

ALPHABETICAL INDEX (CONT)

Subject	Page Number Figure Number
Auxiliary Power Unit Inflight Starting	3-34
Auxiliary Power Units	F 1-17, 1-139
Auxiliary Power Units (APU)	1-16
Auxiliary Power Unit Fire (Crew in Place)	3-20C
Auxiliary Power Unit Fire (Crew Not in Place)	3-22
Auxiliary Ventilation	1-25
Avionics Bus Off Lights	1-165
Avionics Cooling Fans Select Switch	1-178
Avionics Equipment	F 1-81
Avionics Equipment Compartment Overheat Light	1-178
Avionics Equipment Compartment Service Lights	1-176
Avionics Equipment Cooling System	1-140, 1-178
Avionics Equipment Cooling System Controls	1-178
Avionics Equipment Cooling System Indicators	1-178
Avionics Equipment Limitations	5-25

B

Bailout Alarm System	1-320
Bailout Procedures	3-48
Bank Angle Limits	5-20
Batteries	1-166
Battery Bus Lights	1-167
Battery Heater Warning Light	1-250
Battery Switch	1-166
Battery Test Switch	1-250
BDHI	1-209
BDHI Selector Switch Panels	1-209
BDHI System Indicators and Selector Switches	F 1-103
Bearing Distance Heading Indicator Systems (BDHI)	1-209
Before Electrical Power On Check	3-114
Before Entering the Airplane	7-7, 7-15
Before Interior Inspection (Flight Engineer and Scanner)	2-9
Before Landing	4-50, 2-116
Before Landing/Traffic Pattern	2-113, 4-36
Before Leaving Airplane	7-16, 2-132, 4-51
Before Starting Engines	2-62, 3-114, 4-20, 4-38, 7-12
Before Take-off	3-114, 1-34, 2-82, 4-20, 7-13, 4-48A
Before Taxi	2-74, 4-20, 4-48A
Before TF/TA	2-102
BITE Pushbutton	1-259, 1-258
Bleed Air Duct Overheat Detection System	1-24, 1-140
Bleed Air Duct Overheat Detection System Controls and Indicators	1-24
Bleed Air Duct Overheat System Indicator Lights	1-24
Bleed Air Duct Overheat System Test Switches	1-24
Bleed Air Shutoff Switches	1-22
Bleed Air Shutoff Valve Lights	1-23
Bleed Air Smoke Elimination	3-47
Bleed Air System Ducting	1-22
Bleed Air System	1-21, 1-140
B-Offset Control Knob	1-258
Bogie Pitch Annunciator Light On With Landing Gear Lever Up	3-75
Bogie Pitch Annunciator Lights	1-51
Bottle Pressure Indicators	1-13
Boost Pump Out Lights	1-132
Boost Pump Pressure Low Lights	1-131
Boost Pump Switches	1-130
Brake Limitations	5-24
Brake System	1-95, 1-154
Brake System Check (Inflight)	3-77
Brake System Controls and Indicators	1-96
Brake System Failure	3-77
B-Trace Gain Control Knob	1-258
B-Trace Vertical Position Adjustment Knob	1-257
Bus Tie Open Lights	1-165
Bus Tie Switches	1-163

C

Cabin Air Flow Regulation	1-27
Cabin Air Distribution	1-26
Cabin Air Temperature Regulation	1-26
Cabin Altimeter and Differential Pressure Indicator	1-34, 1-177
Cabin Altitude Selector Knobs	1-32
Cabin Pressure Low Caution Lights	1-34
Cabin Rate-of-Climb Indicator	1-34
Cable Tension Regulator Lockout	3-96
CADC Control Panels	F 1-114
CADC Failures	3-98
CADC Selector Panel	F 1-80
CADC Test Switches	1-248
Calibration Pushbutton	1-259
Cargo Compartment (Loadmaster)	1-79
Cargo Compartment Air Conditioning Recirculating Fan Switch	1-30
Cargo Compartment Departure Briefing	4-47
Cargo Compartment Floor Heat System	1-31, 1-141
Cargo Compartment Floor Heat System Controls	1-31
Cargo Compartment Left Side	2-54
Cargo Compartment Lights	1-175
Cargo Compartment Oxygen System	1-318
Cargo Compartment Palletized Seating Kit	1-306
Cargo Compartment - Right Side	2-56
Cargo Compartment - Seat Kit Installed	4-44

ALPHABETICAL INDEX (CONT)

Subject	Page Number Figure Number
Cargo Doors, Visor and Ramp Control Panels	1-29
Cargo Door and Ramp Systems	1-141, 1-270
Cargo Doors Manual Override Valves	F 1-123
Cargo Doors, Visor and Ramp Control Panels	F 1-122
Cargo Jettison Procedures	3-53
Cargo Loading Equipment	1-141, 1-303
Cargo Loading Limits	5-15
Cargo Pallet Stops	1-305
Cargo Winch	1-304
Cargo Winch Controls	1-304
Cargo Winch Operation	1-304
Caution Lights Dimming Switches	1-319
Caution Lights Test Switches	1-319
CDPIR Deploy Light	1-250
CDPIR System Controls and Indicators	1-249
CDPIR System Normal Operation	1-250
CDPIR Panels	F 1-115
Center Duct Overheat	3-40
Center of Gravity (CG), Gear Up or Down, Standard Fuel Sequence	F 5-5A
Center of Gravity Limitations	5-10, 5-23
Center of Separation Switch	1-130
Central Air Data Computer (CADC) Systems Systems	1-247
Central Multiplexer Adapter (CMA)	1-254
Central Processing Unit (CPU)	1-320
Checklists and Procedures Requiring Coordinated Actions	2-1
Check Pushbutton	1-267
Circling Approach	2-103
Circuit Breaker Index Guide	1-136
Circuit Breaker Panels	1-136
Circuit Selector Switch	1-267
Climb	7-4, 7-16
Clocks	1-177
Closing Procedures for Drive-in Loading - Aft Ramp and Pressure Door	1-298
Closing Procedures for Drive-in Loading - Forward Ramp and Ramp Extension	1-284
Closing Procedures for Side and Center Cargo Doors	1-299
Closing Procedure for Truck Loading - Aft Ramp and Pressure Door	1-296
Closing Procedures for Truck Loading - Forward Ramp and Ramp Extension	1-283
Cockpit Loudspeakers	1-179
Cold Weather Operation	7-7
Combustion Section	1-7
Comfort Pallets	1-329
Communication Systems	1-141, 1-178
Compartment Automatic Temperature Control Rheostats	1-29
Compartment Temperature Indicators	1-30
Compressor Section	1-7
Constant Altitude Mode	1-250
Constant-Speed Drive (CSD) Units	1-162
Continuous Flow Oxygen System	1-316
Continuous Flow Oxygen System Controls	1-317
Continuous Flow Oxygen System Indicators	1-317
Continuous Flow Oxygen System Panel Check	1-317
Control and Sequencer Unit (CSU)	1-253
Control Monitor Panel	1-248
Control Wheel	1-98, F 1-44
Cooling Fan Fail Lights	1-178
Copilot	1-79, 4-2
Copilot's Station Lights	1-171
Coupled ILS Approach	2-103
Courier Compartment Lights	1-174
Crash Axes	1-322
Crash Data Position Indicator-Recorder	1-142, 1-248
Crew Check	1-316
Crew Coordination	3-4
Crew Entrance	1-323
Crew Entrance Door and Flight Station Ladder Controls	1-323
Crew Entrance Door and Flight Station Ladder Emergency Operation	1-324
Crew Entrance Door and Flight Station Ladder Normal Operation	1-324
Crew Entrance Door Controls Access Covers	1-323
Crew Entrance Door Emergency Egress Handle	1-324
Crew Entrance Door Emergency Operation	3-5
Crew Entrance Door Hydraulic Handpump	1-323
Crew Entrance Door Indicators	1-324
Crew Entrance Door Ladder Position Lever	1-323
Crew Entrance Door Mechanical Lock	1-323
Crew Entrance Door Operating Control Knob	1-323
Crossfeed Switches	1-130
Crosswind	2-90
Crosswind Asymmetry Malfunction During Flight (Crosswind Inoperative Light On)	3-76
Crosswind Asymmetry Malfunction During Taxi (Crosswind Inoperative Light On)	3-75
Crosswind Landing	2-100
Crosswind Positioning System	1-73
Crosswind Positioning System Computer	1-73
Crosswind Positioning System Controls and Indicators	1-73
Crosswind Steering System	1-154
Cruise	3-116, 2-94, 7-5
Cruise Configuration Turning Flight Stalls	6-2
CSD Disconnect Switches (Emergency)	1-164
CSD Fail Indication	3-107
CSD Fail Lights	1-165
CSD Failure	3-107
CSD Oil Temperature Gages	1-165

ALPHABETICAL INDEX (CONT)

Subject	Page Number Figure Number
D	
Data Retrieval Unit (DRU)	1-253
DC Load Center Circuit Breaker Panel	F 1-63
DC Loadmeters	1-167
DC Power Supply System	1-166
DC System Buses	1-166
DC System Controls	1-166
DC Voltmeter and Selector Switch	1-167
Deploy CDPIR Switch	1-250
Descent	1-34, 2-95, 4-31, 7-16
Descent Briefing	4-49
Diagnosing LRU Failures	1-264
Digital Computer (DCOMP)	1-254
Dim Control Knob	1-257
Dimming Control Knob	1-257
Directional Control	1-105, 6-4
Display Erase Pushbutton	1-258
Ditching	3-78
Ditching Exits - Troop Compartment	3-79
Door Closing	2-3
Door Opening	2-3
Door Position Indicator Lights	1-324
Door Warning System	1-319
Doppler Indicator	1-201
Doppler Turn On/Off (NONAV) Procedure	1-201
Driftdown	3-28
Drop Weight Limitations	5-23
DRU Centering Adjustment	1-257
DRU Film Pack and Reel Stowage	1-331
During Cruise	5-10, 3-113
During Flight	7-16
DVM Calibration Test Pushbutton	1-259
DVM Gain Control Knob	1-258
E	
Effects of Alternate Fuel on Range	5-8
Effect of Gust	2-116
EGT Limits	5-8
Electric Suction Boost Pump Switches	1-45
Electrical Failure During Normal Operation of the Aft Cargo Doors and Ramp	1-302
Electrical Fire	3-40
Electrical Panel	F 1-74
Electrical Power Supply System	1-136, 1-142
Electrical Power System Failure	3-107
Electrical System Component Location Diagram	F 1-57
Elevator Artificial Feel	1-104
Elevator Feel Light	1-104
Elevator Feel Power Off Indication	3-97
Elevator Feel Switches	1-104
Elevator Feel System Off Lights	1-104
Elevator Hydraulic Power Switches	1-102
Elevator Hydraulic System Off Lights	1-102
Elevator Pilot Assist Cable Servo Switch	1-104
Elevator Power Light	1-102
Elevators	1-101, 1-148
EMAC	1-145
EMAC Controls and Indicators	1-251
EMAC Panel	F 1-116
EMAC System Limitations	5-25
Emergency AC Bus Off Light	1-165
Emergency AC/DC Power Supply System	1-167
Emergency Bogie Rotation	3-68
Emergency DC Bus Off Light	1-167
Emergency Depressurization	3-49
Emergency Depressurization Switch	1-32
Emergency Descent	3-49
Emergency Electrical Override Door Open Switch	1-50
Emergency Electrical Override NLG Extend Switch	1-50
Emergency Engine Shutdown	3-28
Emergency Equipment	1-320
Emergency Exit Lights	F 1-78, 1-174, 1-320
Emergency Fuel	5-6
Emergency Generator Emergency Power Light	1-166
Emergency Generator Test Switch	1-164
Emergency Ground Evacuation	3-5
Emergency In-Flight Landing Gear Kneeling	3-75
Emergency Landing Gear Extension Switch On Light On	3-76
Emergency MLG Extension - Hydraulic Pressure Available	3-67
Emergency MLG Extension - Hydraulic Pressure Not Available	3-69
Emergency NLG Extension - Hydraulic Pressure Available	3-69
Emergency NLG Extension - Hydraulic Pressure Not Available	3-70
Emergency Power On Light	1-166
Emergency RAT Deployment and Retraction Override Pushbuttons	1-45
Emergency Rudder Control	1-106
Emergency Signals	3-4
Emergency Switch On Light	1-51
Endurance Mode	1-251
Energy Management System	1-250
Engine Acceleration Limits	5-9
Engine and APU Fire Detect Test Switch	1-12, 1-20
Engine Anti-Ice Limitations	5-5
Engine Anti-Icing System	1-137

ALPHABETICAL INDEX (CONT)

Subject	Page Number Figure Number
Engine, PT_2 Probe and Nacelle Anti-Icing System	1-37
Engine Bleed Air and Anti-Icing System	F 1-20
Engine Bleed Air System	1-21, 1-140
Engine Bleed Air System Controls	1-22
Engine Bleed Air System Indicators	1-23
Engine Controls, Normal Operation	F 1-12
Engine Crosswind/Tailwind Limits	5-8
Engine-Driven Hydraulic Pump Pressure Low Lights	1-46
Engine-Driven Hydraulic Pumps	1-43
Engine-Driven Pump Failure	3-102
Engine Failure During Climbout - With Obstacle	3-28
Engine Failure During Cruise	3-28
Engine Failure During Enroute Climb	3-28
Engine Failure During Take-off	3-115
Engine Failure/Fire, Take-off Continued	3-26
Engine Fire	3-4
Engine Fire Detection and Extinguishing System Controls and Indicators	F 1-15
Engine Fire Handles	1-13
Engine Fire Extinguisher System	1-12, 1-145
Engine Fire on the Ground	3-19
Engine Fuel Flow	F 1-8
Engine Fuel Heater Switches	1-9
Engine Fuel System	1-7, 1-145
Engine Fuel System Controls and Indicators	1-9
Engine Icing	7-2
Engine Ignition System	1-9, 1-146
Engine Ignition System Controls	1-9
Engine Indicators	F 1-14
Engine Instruments	1-146
Engine Limitations	5-5
Engine Oil Filter Differential Pressure Warning Light	3-95
Engine Oil Quantity Indicators	1-11
Engine Oil System	1-11
Engine Oil System Failure	3-94
Engine Overheat	3-4
Engine Overheat and Fire Detection System	1-12, 1-147
Engine Overheating	3-36A
Engine Pressure Ratio (EPR) Indicators	1-10
Engine RPM Limits	5-6
Engines	1-145, 1-6, 3-94
Engine Shutdown	7-14, 2-130, 4-36
Engine Starter System	1-147
Engine Starting System	1-9
Engine Starting System Controls and Indicators	1-10
Engine Thrust	1-7
Engine Thrust Reverser System	1-13, 1-147
Engines Running, On/Offload	4-50
Enroute Descent	2-94
Entrance to Airplane	2-3
Environmental Equipment Compartment Service Lights	1-176
Environmental Panel	F 1-21
Environmental System	F 1-23
Escape Ropes	1-321
Escape Slides	1-321
Exterior Inspection (Scanner)	2-58
Exterior Lights	1-167
Exterior Lights Locations	F 1-75
External/Auxiliary Generator Power Sources	1-162
External Power Light	1-166

F

Factors Affecting Take-Off Decision	3-25
Fan Section	1-6
Fault Pushbutton	1-259
FDS Computer	1-240
FDS Operational Characteristics	1-238
FDS Self-Test Procedures	1-240
FDS Test Pushbuttons	1-240
Filter Differential Pressure Light	3-111, 1-132
Fire	3-4
Fire and Overheat Warning Lights	1-12
Fire Extinguisher Bottle Out Lights	1-13
Fire Extinguisher Bottle Select Switches	1-13
Fire Extinguisher Discharge Buttons	1-13
Fire Extinguishers	1-322
Fire Fighter's Masks	1-322
Fire Suppression System (FSS)	1-320
Fire Warning Lights	1-20
Fires and Overheating	3-36A
First Aid Kits	1-322
Flap and Slat Asymmetry Detector Control Box	1-125
Flap and Slat Controls and Indicators	1-124
Flap and Slat System Failure	3-101
Flap Asymmetry System	1-123
Flap Handle	1-124
Flap Position Indicator	1-124
Flaps and Slats System	F 1-51
Flaps Down Configuration Stall	6-1
Flaps Down Turning Flight Stalls	6-2
Flight Augmentation Failure	3-98
Flight Augmentation System	6-3, 1-117, 1-139
Flight Characteristics With Ailerons Uprigged	6-3
Flight Characteristics With Aft C.G. Location	6-5
Flight Characteristics Without Flight Augmentation	6-3
Flight Control Hydraulic Power Failure	3-96
Flight Controls	6-3

ALPHABETICAL INDEX (CONT)

Subject	Page Number Figure Number
Flight Control System	1-97, 1-147
Flight Control System Controls and Indicators	F 1-45
Flight Control System (Directional Control)	F 1-48
Flight Control System Failures	3-95
Flight Control System (Pitch Control)	F 1-46
Flight Control System (Roll Control)	F 1-43
Flight Crew Galley	1-329
Flight Crew Oxygen Regulators	1-314
Flight Crew Oxygen System	1-313
Flight Crew Procedures	3-114
Flight Crew Seats	F 1-130
Flight Deck	4-38
Flight Deck and Troop Compartment Departure Briefing	4-46
Flight Deck Microphone Unit	1-249
Flight Director Chart	F1-112, F1-113
Flight Director System (FDS)	1-235
Flight Director System Limitations	5-25
Flight Engineer	4-2, 1-91, 3-89
Flight Engineer's Circuit Breaker Panel No. 1	F 1-62
Flight Engineer's Circuit Breaker Panel No. 2	F 1-64
Flight Engineer's Circuit Breaker Panel No. 3	F 1-65
Flight Engineer's Circuit Breaker Panel No. 4	F 1-66
Flight Engineer's Circuit Breaker Panel No. 5	F 1-67
Flight Engineer's Circuit Breaker Panel No. 6	F 1-68
Flight Engineer's Station (Typical)	F 1-5
Flight Engineer's Station Lights	1-172
Flight Limitations	5-20
Flight Planning	2-2
Flight Restrictions	2-2
Flight Spoiler Hydraulic Power Switches	1-100
Flight Spoiler Hydraulic System Off Lights	1-100
Flight Station Access Lights	1-170
Flight Station Dome Lights	1-172
Flight Station Escape Descent Reels	1-321
Flight Station Intercommunication System	1-178
Flight Station Ladder Operating Handles	1-324
Flight Station Secondary Access Rope Ladder	1-321
Flight Station Temperature Control Switch	1-28
Flight Station Thunderstorm Lights	1-171
Floor Heat Switch	1-31
FOCUS Control Knob	1-258, 1-257
Forward C.G.	5-23
Forward Cargo Door and Ramp System Controls	1-271
Forward Cargo Door and Ramp System Operation and Sequencing Procedures	1-273
Forward Cargo Doors and Ramp System Lights	1-272
Forward Door and Ramp System	1-270
Forward Ramp, Ramp Extension and Toes	1-270
Forward Support Area Limitations	5-24
Four-Engine Flameout	3-31
Frangible Switches	1-249
FSS Component Location Diagram	F 1-56A
FSS Control and Indicator Panels	F 1-56B
FSS Fire Detection	1-320A
Fuel and Start Ignition Switch	1-9
Fuel Boost Pumps	1-129
Fuel Control Adjustment	5-8
Fuel Filter Bypass Valve	1-8
Fuel Flow Indicators	1-11
Fuel Heater	1-8
Fuel Heater Limitations	5-5
Fuel Jettison	1-129, 3-52
Fuel Leaks	3-112
Fuel Limitations	5-6
Fuel Line Drains Switch	1-134
Fuel Manifold and Nozzles	1-8
Fuel Manifold Pressure Indicators	1-131
Fuel Panel	F 1-56
Fuel Panel Control Positions	1-132
Fuel Quantity Data Table	F 1-55
Fuel Quantity Indicators	1-131
Fuel Scrubbing	1-129
Fuel Supply System	1-128, 1-149, F 1-54
Fuel Supply System Controls	1-130
Fuel Supply System Indicators	1-131
Fuel System Limitations	5-15
Fuel System Management	1-132
Fuel Tanks	1-129
Fuel Tank Inerting and Pressurizing Subsystem	1-320B
Fuel Tank Pressurization	1-128A
Fuel Tank Inerting System Failure	3-112A
Fuel Tank Venting	1-129
Fuel Temperature Indicator and Selector Switch	1-9
Fuel Unbalance Limitations	5-15
Function Pushbuttons	1-256
Fuselage Lights	1-169

G

General Arrangement Diagram	F 1-1
Generator Fail Lights	1-165
Generator Frequency Limits	5-10
Generator Out Lights	1-165
Generator Switches	1-163
Glideslope Systems	1-189
Go-Around	2-117
Go-Around Attitude Subsystem	1-122, 1-139
Go-Around Attitude Subsystem Limitations	5-25

ALPHABETICAL INDEX (CONT)

Subject	Page Number Figure Number
Go-Around Attitude Subsystem Monitoring and Self-Test	1-122
Go-Around Subsystem Controls	1-120
Go-Around Subsystem Indicators	1-120
Go-Around Subsystem Normal Operation	1-122
Go-Around With One or More Engines Inoperative	3-60
Gravity Fuel Feed	1-129
Gross Weights	5-10
Ground Operation Limitations	5-17
Ground Operations Emergencies	3-5
Ground or Low Airspeed Operation	1-26
Ground Refuel Switches	1-134
Ground Spoiler Handle Lock Override Lever	1-128
Ground Spoiler Handles	1-128
Ground Spoiler Hydraulic Power Switches	1-128
Ground Spoiler Hydraulic System Off Lights	1-128
Ground Spoiler Quadrant Position Indicator	1-128
Ground Spoiler System	F 1-53, 1-127
Ground Spoiler System Controls and Indicators	1-127
Ground Steering System	1-75
Group 1 Controls and Indicators	1-251
Group 2 Controls and Indicators	1-252
Group 3 Controls and Indicators	1-252
Group 4 Controls and Indicators	1-252
Gust Correction	2-90

H

Subject	Page Number Figure Number
HAMS Alternate Modes of Operation	1-233
HAMS Controls and Indicators	1-229
HAMS Comparator	1-228
HAMS Failure Indications	1-230
HAMS Normal Mode of Operation	1-232
HAMS Preflight Check	1-233
Heading and Attitude Monitor System Flow Diagram	F 1-108
Heading and Attitude Monitor System (HAMS)	1-228
HF Liaison Radio	1-185
HF Liaison Radio Controls	1-185
HF Liaison Radio Normal Operation	1-186
HF Liaison Radio Panel	F 1-91
High Noise Areas	2-9, 4-2
High Oil Temperature	3-95
High Pressure Pneumatic System (HPPS)	F 1-31, 1-41
Holding	2-95
Horizontal Situation Indicator (HSI)	1-241
Horizontal Stabilizer Trim Position Indicator	1-104
Horizontal Trace Position Control Knob	1-257
Hot MIC Procedure	4-2
Hot Weather and Desert Operation	7-14
HPPS Switch	1-41
Hydraulic-Driven Boost Pump Failure	3-102
Hydraulic Fluid Cooling	1-43
Hydraulic Power Distribution	F 1-34
Hydraulic Power Supply System	1-43, F 1-33, 1-151
Hydraulic Pressure Indicators	1-46
Hydraulic Pump Depressurization Switches	1-45
Hydraulic Pump Ind Lt	1-152
Hydraulic Reservoir Level Indication	1-46
Hydraulic Reservoirs	1-44
Hydraulic Suction Boost Pumps	1-43
Hydraulic System Component Location Diagram	F 1-32
Hydraulic Systems Control and Indicator Panels	F 1-35
Hydraulic System Controls	1-45
Hydraulic System Failure	3-102
Hydraulic System Indicators	1-46
Hydraulic System Overpressure	3-102
Hydraulic System Review	3-114
Hydraulic System Servicing Provisions	1-43

I

Subject	Page Number Figure Number
Ice Detection System	1-36
Ice Detection System Controls	1-36
Ice Detection System Lights	1-37
Icing	7-2
Identification	4-1
IDNE and Airplane Systems Interface	F 1-99
IDNE Computer Initiated Doppler Test	1-201
IDNE Control and Indicator Panels	1-197
IDNE Data Entry Termination Procedure	1-202
IDNE Display Register Data Table	F 1-101
IDNE Failure Displays	1-206
IDNE Functional Groups Diagram	F 1-98
IDNE Navigation Profiles (Typical)	F 1-96
IDNE Panel Test Program Configurations	F 1-102
IDNE Procedure Error Indications	1-201
IFF (APX-64)	1-186

ALPHABETICAL INDEX (CONT)

Subject	Page Number Figure Number
IFF Emergency Operation	1-188
IFF Indicators	1-187
IFF Normal Operation	1-188
IFF Panel	F 1-92
IFF Self Test	1-187
Inboard Fuel Boost Pumps	1-150
Inertial Doppler Navigation Equipment (IDNE)	1-195
Inertial Doppler Nav Panels	F 1-100
Inflight	4-48A
Inflight Auxiliary Power Unit Compartment Fire	3-35
Inflight Briefing	4-49
Inflight Door Warning	3-49
Inflight Emergencies	3-28
Inflight Fuel Management	1-132
Inflight PTU Compartment Fire (FSS Installed)	3-36
Inflight Thrust Reverser Emergency Retraction	3-59
Inflight Tire Deflation System	1-97, 1-154
Inflight Troubleshooting of Landing Gear Extension and Retraction System	1-53
Initial Buffet and Stall	6-1
Instrument Approaches	2-103, 4-34
Instrument Markings	5-1
Instrument Power Switch (Emergency)	1-164
Instruments	1-10, 1-153, 1-177
Instrument Take-off	2-90
Integral Weight and Balance System (IWBS)	1-153, 1-266A
Integral Weight and Balance System (IWBS) Operation	1-269
Integrated Flight Instrument System (IFIS)	F 1-110, 1-153, 1-235
Integrated Temperature Control	1-26
Intensity Control Knob	1-258
Intercom Monitor Panels	1-180
Intercommunication Control Panels	1-179
Intercom Panels	F 1-84
Intercompartment Intercommunication System	1-180
Interior Arrangement	1-6
Interior Inspection	3-114, 4-3
Interior Inspection (Flight Engineer and Scanner)	2-15
Interior Lights	1-169
Interior Lights Locations	F 1-77
Interphone Cable Retractor Assembly	1-181
Interphone Jack Receptacle Locations	F 1-85
Interphone Procedures and Phraseology	4-1
Introduction	3-4, 4-1, 5-1, 6-1
Isolated AC Bus Off Light	1-165
Isolated Bus Switch	1-166
Isolated DC Bus Off Light	1-167
Isolation Switches	1-130
IWBS Controls	1-266A
IWBS Limitations	5-25
IWBS Preflight Test and Weighing Procedures	1-267

J

Jammed Directional Control System	3-96
Jammed Feel Springs	3-96
Jammed Pitch Control System	3-95
Jammed Roll Control System	3-96
Jettison - Emergency Door Opening	1-301
Jettison - Emergency Door Closing	1-302
Jettison of Cargo From Aerial Delivery Configuration	3-56, 3-58
Jettison Switches	1-130

K

Keyset and Display	1-255
Kneel Subsystems Operation (Pneumatic Kneeling)	7-11
Kneeling Mode Selector Switch	1-266B
Kneeling Operation	1-96, 1-80
Kneeling/Unkneeling	2-3

L

Landing	2-115, 3-113, 7-14
Landing Emergencies	3-59
Landing Gear Brake System	F 1-41
Landing Gear Emergency Extend Switches	1-50
Landing Gear Failure	3-67
Landing Gear Hydraulic Kneeling System	1-89
Landing Gear Hydraulic Kneeling System Operation	1-91
Landing Gear Pneumatic Kneeling System	1-154
Landing Gear Kneeling System Control Module	1-78
Landing Gear Kneeling System Controls	1-77, 1-90
Landing Gear Kneeling System Indicators	1-78, 1-90
Landing Gear Lever	1-50
Landing Gear Lever Lock Release	1-50
Landing Gear Position Indicators	1-51
Landing Gear Sequence Control Lights	1-52
Landing Gear System	F 1-36, 1-47, 1-154
Landing Gear System Controls	1-50
Landing Gear System Indicators	1-51
Landing Gear Warning Horn	1-52
Landing Gear Warning Light	1-52

ALPHABETICAL INDEX (CONT)

Subject	Page Number Figure Number
Landing Gear Warning Test Button	1-53
Landing Lights	1-168
Landing With Flat Tire	3-61
Landing With Nose Gear Retracted	3-61
Landing With One or More Engines Inoperative	3-60
Landing With One or More Main Gear Retracted	3-60
Lateral Augmentation System	1-119
Lateral Augmentation System Controls	1-119
Lateral Augmentation System Indicators	1-119
Lateral Augmentation System Normal Operation	1-119
Lateral - Directional Control Characteristics	6-4
Lateral - Directional Stability	6-4
Lavatory Facilities	1-329
LDCS Controls	1-99
Leading Edge Slat Asymmetry and Brake On Lights	1-125
Left and Right Separation Switches	1-130
Left Main Landing Gear	1-91, 1-79
Left or Right Duct Overheat	3-39
Letdown Chart Holders	1-331
Level Flight Characteristics	6-3
Liferafts and Survival Kits	1-320
Life Vest Stowage Provisions	1-322
Lift Distribution Control Subsystem (LDCS)	1-99
Lighting Control Panels	F 1-76
Lighting System	1-156, 1-167
Limitations for Operation in Icing Conditions	5-15
Limitations for Operation With Inoperative Emergency Rudder Trim	5-17
Limitations for Operation With Partial Brakes Inoperative	5-24
Limitations for Operation With Slats Retracted	5-15
Lineup	2-85
Liquid Oxygen Quantity Indicators	1-313
Liquid Oxygen Quantity Indicator Test Switches	1-313
Liquid Oxygen Quantity Low Lights	1-313
Liquid Oxygen Supply	1-313
Liquid Oxygen Supply Controls	1-313
Liquid Oxygen Supply Indicators	1-313
Liquid Oxygen Supply Manual Shutoff Valve	1-313
Loading	4-46
Loading Instructions	1-305
Loading the APU	1-20
Longitudinal Stability	6-4
Long Range Navigation (Loran)	1-192
Loose Equipment Stowage Boxes	1-331
Loran Controls and Indicators	1-192
Loran Operating Characteristics	1-195
Loran Panel	F 1-95
Loran Skywave - Groundwave Operation	1-194
Loss of Electrical Power	3-101
Loss of Fluids - Visible or Indicated	3-23
Loss of Hydraulic System No. 1 Pressure	3-104
Loss of Hydraulic System No. 2 Pressure	3-104
Loss of Hydraulic System No. 3 Pressure	3-104
Loss of Hydraulic System No. 4 Pressure	3-104
Loss of Hydraulic Systems No. 1 And No. 2 Quantity	3-106
Loss of Hydraulic Systems No. 1 And No. 3 Quantity	3-106
Loss of Hydraulic Systems No. 1 And No. 4 Quantity	3-107
Loss of Hydraulic Systems No. 2 And No. 3 Quantity	3-106
Loss of Hydraulic Systems No. 2 And No. 4 Quantity	3-107
Loss of Hydraulic Systems No. 3 And No. 4 Quantity	3-107
Low Altitude Radar Altimeter Normal Operation	1-234
Low Altitude Radar Altimeter System	1-157, 1-234
Low Oil Pressure	3-94
Low Oil Pressure Lights	1-11
Low Pressure Pneumatic System (LPPS)	F 1-39, 1-40
Low Temperature Ground Operation	5-8
Low Temperature Flight Operation	5-8
LPPS Control	1-40
LPPS Indicators	1-41
LPPS Normal Operation	1-41

M

MADAR Decomp Update Procedures	1-262
MADAR Engine Vibration Analysis	1-265
MADAR Engine Vibration Limits	5-6
MADAR/IWBS Signal Conditioner	1-255
MADAR Panels	F 1-119
MADAR Prelanding Procedure	1-265

ALPHABETICAL INDEX (CONT)

Subject	Page Number / Figure Number
MADAR Subsystem Controls And Indicators	1-255
MADAR Subsystem Manual BITE	1-262
MADAR Subsystem Operation	1-264
MADAR Subsystem Shutdown Procedure	1-266A
MADAR Subsystem Start-up Procedure	1-262
MADAR System Diagram	F 1-117
MADAR System Malfunction Traces (Frame 4994)	F 1-119C
MADAR System Operating Modes	1-261
Magnetic Compass	1-177
Main and Nose Landing Gear	1-155
Main Bus Off Lights	1-165, 1-167
Main Gear Crosswind Positioning	1-73
Main Generator Failure	3-108
Main Generators	1-162
Main Landing Gear	1-47
Main Landing Gear Doors	1-47
Main Landing Gear Emergency Extension	1-48
Main Landing Gear Extension	1-48
Main Landing Gear Inflight Kneeling (Hydraulic)	1-88
Main Landing Gear Inflight Kneeling Pneumatic	1-88
Main Landing Gear Inflight Kneeling System Controls	1-88
Main Landing Gear Inflight Kneeling System Indicators	1-88
Main Landing Gear Inspection Lights	1-169
Main Landing Gear Kneeling Collars	1-77, 1-89
Main Landing Gear Kneeling System	1-77, 1-89
Main Landing Gear Retraction	1-47
Main Tank Fill Switches	1-130
Maintenance Data Recorder (MDR)	1-254
Malfunction Detection, Analysis, and Recording (MDAR) Subsystem	1-157, 1-253
Maneuver Load Limits	5-20
Maneuvering Flight	6-5
Manifold Pressure Low Lights	1-131
Manual Aerial Refuel Slipway Door Handle	1-135
Manual Cabin Pressure Controller	1-32
Manual Multiplexer (MMUX)	1-254
Manual Override Operation - Forward Cargo Doors	1-281
Manual Pitch Trim Levers	1-103
Manual Signal Acquisition Remote Units (SAR-M)	1-254
Marker Beacon Receiver	1-192
Marker Beacon Receiver Controls	1-192
Master Caution System	1-318
Maximum Allowable Fuel Differential	F 5-7
Maximum Flight Speed VS Altitude - Clean or Thrust Reversers Extended	F 5-8
MDR Cassette Installation Procedure	1-260
MDR Cassette Removal Procedure	1-260
MDR Cassette Tape Loading Procedure	1-261
MDR Components	1-259
Meal Briefing	4-49
Message Ready/Paper Advance Pushbutton	1-259
Microphone and Headset Extension Cords	1-179
Microphone Switches	1-179
Minimum Crew Requirements	5-1
Minimum Run Landing	2-116
Miscellaneous Equipment	1-158, 1-329
Mission Requirements - Automatic (TF/TA)	2-101
Mission Requirements - Manual (TF/TA)	2-101
MMR Limitations	5-25
MMR Stabilization	1-220
Mode Pushbuttons	1-255
Modes of Operation	1-250
Monitor Bus Switches	1-164
Multi-Mode Radar (MMR) Subsystem	1-210
Multi-Mode Radar Normal Operation	1-221
Multi-Mode Radar Panels	F 1-104
Multi-Mode Radar Set Test Procedures	1-220
Multi-Mode Radar Subsystem Controls and Indicators	1-211
Multi-Mode Radar Subsystem Operating Modes and Characteristics	1-217

N

Subject	Page Number / Figure Number
N_1 and N_2 RPM Indicators	1-10
Nacelle Bleed Air Duct Failure	3-36A
Navigation	1-202
Navigation Lights	1-168
Navigation Selector Panel Dimming Control	1-244
Navigation Selector Panels	F 1-111, 1-244
Navigation Systems	1-158, 1-188
Navigator's Airspeed Indicator	1-177
Navigator's Altimeter	1-177
Navigator's Alternate Air Drop Intercom Facility	1-180
Navigator's and Flight Engineer's Seats	1-328
Navigator's Circuit Breaker Panels	F 1-69
Navigator's Station	F 1-6
Navigator's Station Lights	1-172
Navigator's True Airspeed Indicator	1-177
Navigator's Vertical Velocity Indicator	1-177
Night Curtain	1-331
Nitrogen Fire Suppression Subsystem	1-320B
Nitrogen Fire Suppression Zones	F 1-56C
No Flap Landings	3-59
No Slat Landings	3-60
Nomenclature	4-1

ALPHABETICAL INDEX (CONT)

Subject	Page Number Figure Number
Non-Standard Fuel Sequence Procedures	5-15
Normal Climbout Technique	2-90
Normal Landing	2-115
Normal Operation of the Windshield Ice and Fog Protection System	1-39
Normal Pitch Trim Switches	1-103
Normal Procedures	4-3, 4-52
Nose Gear Crosswind Positioning	1-73
Nose Gear Emergency Steering System	1-75
Nose Gear Steering System	1-75
Nose Gear Steering System Controls and Indicators	1-76
Nose Landing Gear	1-49
Nose Landing Gear Area Inspection Lights	1-169
Nose Landing Gear Door Limits	5-20
Nose Landing Gear Doors	1-49
Nose Landing Gear Emergency Extension	1-49
Nose Landing Gear Extension	1-49
Nose Landing Gear Fiber Optic Scope	1-52
Nose Landing Gear Kneeling System	1-89, 1-77
Nose Landing Gear Retraction	1-49
Nose Landing Gear Shifter Position Indicator	1-52
Nose Landing Gear Shifter Position Indicator Lights	1-52
Nose Landing Gear Shifter Switch	1-51

O

Observer's Seat	1-328
Obstacle Clearance Climbout Technique	2-91
Odors	3-4
Oil Pressure Operating Ranges	5-5
On Entering the Airplane	7-8
One or More Tires on One Main Gear Flat	3-61
Opening Procedures for Center and Side Cargo Doors	1-294
Opening Procedures for Drive-in Loading - Aft Ramp and Pressure Door	1-297
Opening Procedures for Drive-in Loading - Forward Ramp and Ramp Extension	1-283
Opening Procedures for Truck Loading - Aft Ramp and Pressure Door	1-295
Opening Procedures for Truck Loading - Forward Ramp and Ramp Extension	1-282
Operate Mode	1-261
Operation in Turbulence	5-24
Operation of Flight Crew Oxygen System	1-315
Operation of MMR X-band Radar with Weather Radar Switch	1-216
Operational Stop After Landing	2-126
Operational Stop Checklist	2-123
Operational Stop Engine Shutdown	2-127
Operational Stop Starting Engines	2-128
Operations During Icing Conditions	7-4
Optimum Altitude Mode	1-250
Oscilloscope and Digital Readout Unit (ODRU)	1-254
Outboard Fuel Boost Pump	1-151
Outboard Main Tank Low Indication	3-112
Outflow Valve Position Indicator	1-34
Oxygen Distribution	1-312
Oxygen Duration Chart	F 1-127, 1-316
Oxygen Mask Stowage Provisions	1-322
Oxygen System	1-160, 1-312, 1-272, F 1-126
Oxygen Warning System	1-313

P

PACS Pitch Off Light	1-104
PACS Roll Off Light	1-101
Pallet Restraint Devices	1-303
Paper Remaining Indicator	1-259
Paradrop and ADS Panels	F 1-121
Paratroop Equipment	1-160, 1-306
Paratroop Jump Signals	1-307
Parking	7-16
Passenger Loading	2-8
PCI Controls	1-243
PCI Indicators	1-243
PCI Normal Operation	1-243
Penetrations	2-95
Peripheral Command Indicator (PCI)	1-243
Periscopic Sextant	1-233
Personnel Advisory, Caution and Warning Annunciators	1-332
Personnel Loading	4-46
Pilot	4-2
Pilot Assist Cable Servo (PACS) Pitch	1-104
Pilot Assist Cable Servo (PACS) Roll	1-101
Pilot Assist Cable Servo Subsystem	1-120
Pilot's and Copilot's ADI Mode Lights Dimming Knobs	1-243
Pilot's and Copilot's Seats	1-327
Pilot's Center Console Lights	1-171
Pilot's Center Instrument Panel	F 1-10
Pilot's Center Instrument Panel Lights	1-170
Pilot's Emergency Circuit Breaker Panel	F 1-61
Pilot's Instrument Panel	F 1-9
Pilot's Overhead Panel Lights	1-170
Pilot's Standby Compass Light	1-171
Pilot's Station	F 1-3
Pilot's Station Lights	1-170
Pitch and Yaw Rate Gyro	1-255
Pitch Augmentation System	1-120
Pitch Augmentation System Controls	1-120
Pitch Augmentation System Indicators	1-120
Pitch Augmentation System Normal Operation	1-120

ALPHABETICAL INDEX (CONT)

Subject	Page Number Figure Number
Pilot's Station Light	1-148
Pitch Control	1-101
Pitch Trim Failure	3-97
Pitch Trim System	F 1-47, 1-102
Pitot Heat Fault Lights	1-38
Pitot Heat Switches	1-38
Pitot Heat System	1-38, 1-138
Pitot Heat System Controls and Indicators	1-38
Pitot Static Operated Instruments	1-177
Pitot Static System	F 1-79, 1-177
Pitot Static System Isolation Procedure	3-100
Pneumatic Systems	1-40, 1-160
Portable Dock Operation	4-46
Portable Inspection Lights	1-332
Portable Oxygen Bottle Duration Time	1-315
Portable Oxygen Bottle Recharger Outlets	1-318
Portable Oxygen Bottles	1-314
Portable Oxygen Bottle Stowage	1-318
Position Fixing Procedures	1-205
Postflight	7-14
Power On/Off Circuit Breaker	1-258
Power Transfer Units (PTU)	1-44
Practice Approach To Initial Buffet/Shaker	6-2
Practice Manuevers With One or More Engines Inoperative	3-36
Precautionary Engine Shutdown	3-30
Pre Check Selector Switch	1-133
Preflight	4-38
Preflight Checks	2-9
Preparation for Flight	2-1
Pressure Augmenter Valve Bleed Air Switches	1-22
Pressure Augmenter Valve Lights	1-23
Pressure Door	1-285
Pressure Door Hinge Lock Blocks	1-332
Pressure Door Unlock Indication	3-49
Pressurization Mode Selector Switch	1-33
Pressurization System	1-31, 1-160
Pressurization System Controls	1-32
Pressurization System Indicators	1-33
Pressurization System Manual Operation	1-34
Pressurization System Normal Operation	1-34
Pressurization System-Pressurization Control for ADS Operation	1-34
Printout Unit (POU)	1-254
Printout Unit Paper Roll Replacement Procedure	1-259
Protective Covers	1-330
PTU Compartment Fire (Crew in Place) (FSS Installed)	3-20B
Public Address System (AN/AIC-13)	1-181
Public Address System Auxiliary Panels	1-182
Public Address System Main Panel	1-182
Public Address System Operation	1-183
Public Address System Panels	F 1-86

R

Subject	Page Number Figure Number
Radar Altimeter	F 1-109
Radar Altimeter Controls and Indicators	1-234
Radar Approach To Landing	1-205
Radome	7-3
Radome Area Inspection Lights	1-169
Radome Failure	3-112A
Rain	7-5
Rain Repellent Container Selector Switch	1-35
Rain Repellent Discharge Pushbuttons	1-35
Rain Repellent System	1-35
Rain Repellent System Controls	1-35
Rain Repellent System Operation	1-36
Ram Air Turbine Hydraulic Pump	1-44
Ram Air Turbine Indicator Lights	1-46
Ram Air Turbine (RAT) Switch	1-45
Ramp Position Selector Switch	1-267
Rapid Decompression	3-51
Rapid Descent	2-94A
Ratio Shift Light	1-101
Recommended and Alternate Fuel	5-10
Recorder Malfunction Light	1-250
Refuel Valve Switches	1-133
Relief Crew and Courier Compartment Oxygen System	1-317
Relief Crew Area Lights	1-173
Relief Crew Bunk Area Oxygen System	1-316
Relief Crew Area Temperature Control Switch	1-29
Relief Crew Liferaft Release Handle	1-321
Relief Crew Work Table	1-330
Remote Control Intercom Units	1-181
Remote HSI Heading and Course Selector Panels	1-242
Rendezvous Radar Beacon Panel	F 1-105
Rendezvous Radar Beacon Set	1-221
Rendezvous Radar Beacon Set Controls and Indicators	1-221
Rendezvous Radar Beacon Set Normal Operation	1-221
Resonant Check Traces (Frame 4994)	F 1-119B
Restraint Rails	1-303
Retriever Winches	1-306
Reverse Thrust Emergency Retract Switches	1-15
Reverse Thrust Limiter Knob	1-15
Right Main Landing Gear	1-91, 1-79
Roll Control	1-97
Roller Conveyors	1-308, 1-303
Rolling Take-Off	2-79
Rotation Go-Around Computer Take-Off	2-90
Rudder Feel and Trim System	1-106
Rudder Hydraulic Power Off Indication	3-97
Rudder Hydraulic Power Switches	1-105

ALPHABETICAL INDEX (CONT)

Subject	Page Number Figure Number
Rudder Hydraulic System Off Lights	1-105
Rudder Limiter Light	1-106
Rudder Limit Switch	1-106
Rudder Minimum Q Light	1-106
Rudder Pedal Adjustment Crank and Indicator	1-105
Rudder Power Light	1-105
Rudders	1-105, 1-148
Rudder Stop System	1-105
Rudder Stop System Failure	3-97
Rudder Trim Position Indicator	1-106
Rudder Trim Switches	1-106
Runaway Pitch Trim	3-97
S	
Safety Fences	1-307
Scale Illumination Control Knob	1-257
Scroll Checklist Holders	1-331
Seat Fore, Aft and Lateral Adjustment	1-327
Seat Horizontal and Swivel Adjustment Knob	1-328
Seat Recline Adjustment Lever	1-328, 1-327
Seats	1-327
Seat Vertical Adjustment Lever	1-328, 1-327
Self-Luminous Exit Signs and Markers	1-320
Self-Powered Instruments	1-177
Sensor Selector Switch	1-267
Sequence	4-2
Short Discriminator Test Switch	1-12
Shoulder Harness Lock Lever	1-328, 1-327
Single Point Ground Refueling Receptacle Lights	1-169
Single Point Refueling and Defueling System	1-133
Single Point Refueling and Defueling System Controls and Indicators	1-133
Single Point Refueling and Defueling System Operation	1-133
Single Sweep Pushbutton	1-258
SKE Controls and Indicators	1-222
SKE Limitations	5-25
SKE Subsystem Normal Operation	1-225
SKE Subsystem Test Functions and Procedures	1-224
Slat Asymmetry System	1-123
Slat Drive Disconnect Switch	1-124
Slat Drive Malfunctions	3-101
Slat-Flap Synchronization Light	1-126
Slat-Flap Re-Synchronizing Procedure	
Slat Position Indicator	1-124
Small Article Jettison From Troop Doors	3-58
Smoke and Fume Elimination	3-44
Smoke Detection Locate Switch	1-319
Smoke Detection System	1-319
Smoke Detection Test Switch	1-320
Smoke Detector Panel	F 1-129
Smoke Goggles	1-322
Smoke Lights	1-320
Snatch Blocks	1-305
Spare Lamp Control	1-257
Spins	6-3
Spoiler Power Light	1-100
Spoiler Ratio Shifter	1-100
Spoiler Ratio Shifter Failure	3-101
Spoiler Ratio Shifter Lights	1-100
Spoilers	1-100
Spoilers, Flight and Ground	1-149
Spoilers Ratio Shifter Switches	1-100
Stabilizer Struts	1-305
Stabilizer Trim Reset Switch	1-103
Stair Ladder Controls	1-325
Stall Lights	1-127
Stall Recovery Techniques	6-2
Stall Warning	1-126
Stallimiter Audible Warning Switches	1-127
Stallimiter Audio Off Lights	1-127
Stallimiter Computer	1-126
Stallimiter Off Lights	1-127
Stallimiter System	1-126, 1-160
Stallimiter System Controls	F 1-52
Stallimiter System Controls and Indicators	1-127
Stallimiter System Failure	3-98
Stallimiter System Limitations	5-20
Stallimiter System Test Switches	1-127
Stalls	6-1
Standard Fuel System Management	1-132
Standard Symbols	F 1-131
Standby Mode	1-261
Standing Take-off	2-89
Starter Button	1-10
Starter Limitations	5-5
Starter Valve Light	1-10
Starting Engines	7-15, 2-6-B, 7-12
Starting the APU	1-18
Static Line Retriever Winch Controls	1-307
Station Keeping Equipment	F 1-106
Station Keeping Equipment (SKE) Subsystem	1-222
Stopping Engines	7-16
Stopping the APU	1-20
Structural Icing	7-3
Student/Instructor Seats	1-328
Substandard Runways	5-18
Sump Low Lights	1-131
Sump Low Test Switches	1-130
Sump Low Warning Light Indication	3-111
Supplemental Cargo Fuselage Station Selector Switch	1-267
Supplemental Cargo Loading and Unloading Procedure	1-269
Supplemental Cargo Loading Pushbutton	1-267

TABLE OF CONTENTS

SECTION I..... DESCRIPTION AND OPERATION 1-1

SECTION II ..... NORMAL PROCEDURES 2-1

SECTION III ..... EMERGENCY PROCEDURES 3-1

SECTION IV ..... CREW DUTIES 4-1

SECTION V ..... OPERATING LIMITATIONS 5-1

SECTION VI..... FLIGHT CHARACTERISTICS 6-1

SECTION VII ..... ADVERSE WEATHER OPERATION 7-1

APPENDIX I..... PERFORMANCE DATA SEE T.O. 1C-5A-1-1

INDEX..... ALPHABETICAL INDEX-1

AIRPLANES HAVE GROWN A LOT IN 65 YEARS

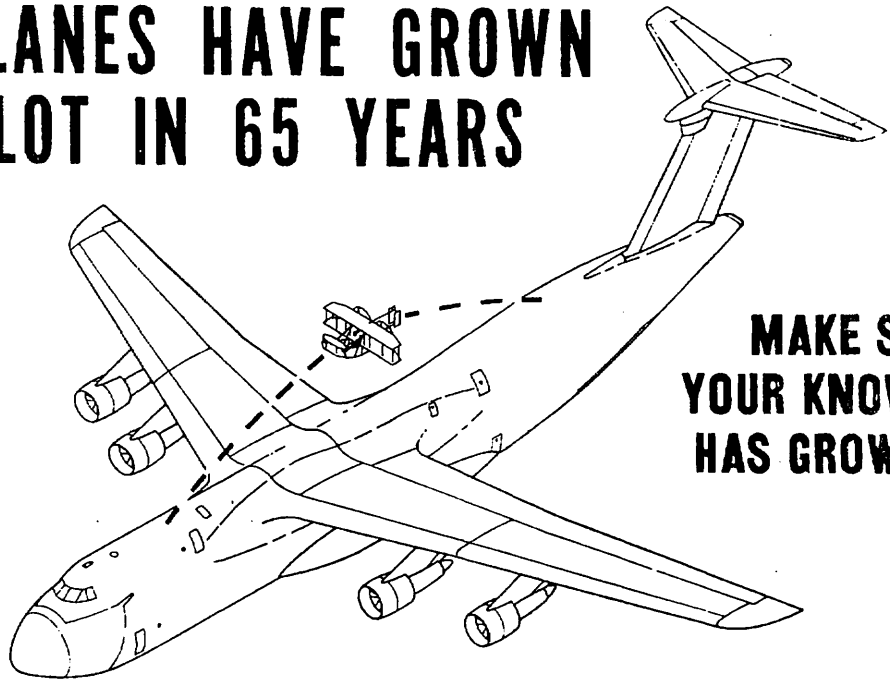

MAKE SURE YOUR KNOWLEDGE HAS GROWN TOO

SCOPE.

This manual contains information which will provide you with a general knowledge of the airplane, its characteristics, and specific, normal, and emergency operating procedures. Your flying experience is recognized; therefore, basic flight principles are avoided. Multiple emergencies, adverse weather, terrain, or extenuating circumstances may require modification of any procedure(s) presented in this manual.

Airplane 68305 is a test airplane and is not covered in this manual. This manual provides coverage for airplanes 68304 and 68306 and up.

PERMISSIBLE OPERATIONS.

The Flight Manual takes a "positive approach" and normally states only what you can do. Unusual operations or configurations (such as asymmetrical loading) are prohibited unless specifically covered herein. Clearance must be obtained from the Flight Manual Manager before any questionable operation is attempted which is not specifically permitted in this manual.

In some cases the limits and tolerances presented in the flight manual are not precisely identical to those presented in the maintenance manuals. The numerical values in the flight manual are to be used as operating guides by flight personnel.

HOW TO BE ASSURED OF HAVING LATEST DATA.

Refer to T.O. 0-1-1-3 and its monthly supplements for a listing of all current flight manuals, safety supplements, operational supplements and checklists. Also, check the flight manual cover page, the title block of each safety and operational supplement and the latest status page contained in the manual or the latest safety or operational supplement.

SECTION I

DESCRIPTION AND OPERATION

Table of Contents

	Page
THE AIRPLANE	1-6
ENGINES	1-6
AUXILIARY POWER UNITS (APU)	1-16
BLEED AIR SYSTEMS	1-21
AIR CONDITIONING SYSTEM	1-25
CARGO COMPARTMENT FLOOR HEAT SYSTEM	1-31
PRESSURIZATION SYSTEM	1-31
WINDSHIELD RAIN REMOVAL SYSTEM	1-35
ANTI-ICING AND DE-ICING SYSTEMS	1-36
PNEUMATIC SYSTEMS	1-40
AIR TURBINE MOTORS (ATM)	1-41
HYDRAULIC POWER SUPPLY SYSTEM	1-43
LANDING GEAR SYSTEM	1-47
FLIGHT CONTROL SYSTEM	1-97
AUTOMATIC FLIGHT CONTROL SYSTEM	1-106
WING FLAPS AND SLATS SYSTEM	1-122
STALLIMITER SYSTEM	1-126
GROUND SPOILER SYSTEM	1-127
FUEL SUPPLY SYSTEM	1-128
ELECTRICAL POWER SUPPLY SYSTEM	1-136
EMERGENCY AC/DC POWER SUPPLY SYSTEM	1-167
LIGHTING SYSTEM	1-167
INSTRUMENTS	1-177
AVIONICS EQUIPMENT COOLING SYSTEM	1-178
COMMUNICATION SYSTEMS	1-178
NAVIGATION SYSTEMS	1-188
LOW ALTITUDE RADAR ALTIMETER SYSTEM	1-234
INTEGRATED FLIGHT INSTRUMENT SYSTEM (IFIS)	1-235
CRASH DATA POSITION INDICATOR-RECORDER	1-248
ENERGY MANAGEMENT SYSTEM	1-250
MALFUNCTION, DETECTION, ANALYSIS AND RECORDING (MADAR) SUBSYSTEM	1-253
INTEGRAL WEIGHT AND BALANCE SYSTEM (IWBS)	1-265
CARGO DOOR AND RAMP SYSTEMS	1-270
CARGO LOADING EQUIPMENT	1-303
TROOP CARRYING EQUIPMENT	1-305
PARATROOP EQUIPMENT	1-306
AIR DROP SYSTEM (ADS)	1-307
OXYGEN SYSTEM	1-312
WARNING SYSTEMS	1-318
FIRE SUPPRESSION SYSTEM (FSS)	1-320
EMERGENCY EQUIPMENT	1-320F
CREW ENTRANCE	1-323
TROOP COMPARTMENT STAIR LADDER	1-325
SEATS	1-327
MISCELLANEOUS EQUIPMENT	1-329

LIST OF ILLUSTRATIONS

Number	Title	Page
1-70	AC Load Center Circuit Breaker Panels	1-447
1-59	AC Power Distribution	1-424
1-94	ADF Panel	1-476
1-124	Aft Pressure Door Upper Hinge and Interlock Mechanism	1-536
1-25	Air Conditioning Airflow Selector Chart	1-370
1-24	Air Conditioning Master Switch Position Chart	1-369
1-58	Airplane Electrical System	1-422
1-55A	Alternate Fuel Sequence	1-420
1-128	Annunciator Panel	1-546
1-82	Antenna Locations	1-464
1-88	Antenna Select Panels	1-474
1-29	Anti-Iced or De-Iced Tubes, Probes and Vanes Location	1-374
1-28	Anti-Icing System Panels	1-373
1-71	APU and External AC Power Circuit Breaker Panel	1-450
1-18	APU Panels	1-360
1-107	Attitude and Heading Reference Unit Panels	1-499
1-47	Automatic Flight Control System	1-408
1-50	Autopilot Equipment Interface	1-411
1-17	Auxiliary Power Units	1-359
1-19	Auxiliary Power Units Fire Detection and Extinguish System	1-361
1-81	Avionics Equipment	1-462
1-72	Battery Compartment Circuit Breakers	1-451
1-103	BDHI System Indicators and Selector Switches	1-493
1-22	Bleed Air and Environmental Systems Basic Components and Air Distribution Ducting	1-364
1-26	Cabin Pressure Altitude Chart	1-371
1-27	Cabin Pressure Control System	1-372
1-114	CADC Control Panels	1-519
1-80	CADC Selector Panel	1-461
1-123	Cargo Doors Manual Override Valves	1-533
1-122	Cargo Doors, Visor and Ramp Control Panels	1-531
1-115	CDPIR Panels	1-520
1-44	Control Wheel	1-403
1-11	Copilot's Instrument Panel	1-352
1-4	Copilot's Station	1-345
1-2	Crew Movement and Compartment Diagram	1-342
1-118	CSU Command Codes	1-523
1-63	DC Load Center Circuit Breaker Panel	1-438
1-60	DC Power Distribution	1-432
1-74	Electrical Panel	1-453
1-58	Electrical System (Airplane)	1-422
1-57	Electrical System Component Location Diagram	1-421
1-116	EMAC Panel	1-521
1-78	Emergency Exit Light	1-459
1-73	Emergency Generator Circuit Breaker Panel	1-452
1-7	Engine	1-348
1-20	Engine Bleed Air and Anti-Icing System	1-362
1-12	Engine Controls, Normal Operation	1-353
1-15	Engine Fire Detection and Extinguishing System Controls and Indicators	1-356
1-16	Engine Fire Detection and Fire Extinguishing System	1-357
1-8	Engine Fuel Flow	1-349
1-14	Engine Indicators	1-355
1-21	Environmental Panel	1-363
1-23	Environmental System	1-366
1-33	Escape Slide Reservoir Charge Pressure	1-378
1-75	Exterior Lights Locations	1-454
1-51	Flaps and Slats System	1-413
1-45	Flight Control System Controls and Indicators	1-404

LIST OF ILLUSTRATIONS (CONT)

Number	Title	Page
1-48	Flight Control System (Directional Control)	1-409
1-46	Flight Control System (Pitch Control)	1-406
1-43	Flight Control System (Roll Control)	1-401
1-130	Flight Crew Seats	1-548
1-112	Flight Director Chart	1-508
1-113	Flight Director Chart	1-514
1-62	Flight Engineer's Circuit Breaker Panel No. 1	1-437
1-64	Flight Engineer's Circuit Breaker Panel No. 2	1-439
1-65	Flight Engineer's Circuit Breaker Panel No. 3	1-440
1-66	Flight Engineer's Circuit Breaker Panel No. 4	1-441
1-67	Flight Engineer's Circuit Breaker Panel No. 5	1-442
1-68	Flight Engineer's Circuit Breaker Panel No. 6	1-444
1-5	Flight Engineer's Station (Typical)	1-346
1-56A	FSS Component Location Diagram	1-420B
1-56B	FSS Control and Indicator Panels	1-420C
1-56	Fuel Panel	1-420A
1-55	Fuel Quantity Data Table	1-419
1-54	Fuel Supply System	1-416
1-1	General Arrangement Diagram	1-334
1-53	Ground Spoiler System	1-415
1-108	Heading and Attitude Monitor System Flow Diagram	1-500
1-91	HF Liaison Radio Panel	1-476
1-31	High Pressure Pneumatic System	1-376
1-34	Hydraulic Power Distribution	1-381
1-33	Hydraulic Power Supply Systems	1-378
1-32	Hydraulic System Component Location Diagram	1-377
1-35	Hydraulic Systems Control and Indicator Panels	1-383
1-99	IDNE and Airplane Systems Interface	1-482
1-101	IDNE Display Register Data Table	1-484
1-98	IDNE Functional Groups Diagram	1-482
1-96	IDNE Navigation Profiles (Typical)	1-479
1-102	IDNE Panel Test Program Configurations	1-491
1-92	IFF Panel	1-476
1-100	Inertial Doppler Nav Panels	1-483
1-110	Integrated Flight Instrument System	1-503
1-84	Intercom Panels	1-468
1-77	Interior Lights Locations	1-458
1-85	Interphone Jack Receptacle Locations	1-469
1-38	Kneeling Pad Positions	1-393
1-41	Landing Gear Brake System	1-398
1-40	Landing Gear Hydraulic Kneeling System Controls and Indicators	1-396
1-36	Landing Gear System	1-384
1-37	Landing Gear System Controls and Indicators	1-387
1-39	Landing Gear Steering and Crosswind Positioning Systems	1-394
1-76	Lighting Control Panels	1-455
1-95	Loran Panel	1-478
1-30	Low Pressure Pneumatic System	1-375
1-119	MADAR Panels	1-524
1-117	MADAR System Diagram	1-522
1-119C	MADAR System Malfunction Traces (Frame 4994)	1-526D
1-104	Multi-Mode Radar Panels	1-494
1-111	Navigation Selector Panels	1-506
1-69	Navigator's Circuit Breaker Panels	1-445
1-6	Navigator's Station	1-347
1-56C	Nitrogen Fire Suppression Zones	1-420F
1-127	Oxygen Duration Chart	1-545
1-126	Oxygen System	1-540
1-121	Paradrop and ADS Panels	1-529
1-10	Pilot's Center Instrument Panel	1-351

LIST OF ILLUSTRATIONS (CONT)

Number	Title	Page
1-61	Pilot's Emergency Circuit Breaker Panel	1-436
1-9	Pilot's Instrument Panel	1-350
1-8	Pilot's Station	1-344
1-47	Pitch Trim System	1-408
1-79	Pitot Static System	1-460
1-86	Public Address System Panels	1-472
1-109	Radar Altimeter	1-502
1-105	Rendezvous Radar Beacon Panel	1-496
1-119B	Resonant Check Traces (Frame 4994)	1-526C
1-129	Smoke Detection System Control and Indicator Panels	1-547
1-52	Stallimiter System Controls	1-414
1-131	Standard Symbols	1-549
1-106	Station Keeping Equipment	1-497
1-83	Table of Avionics Equipment	1-466
1-93	TACAN Panels	1-477
1-13	Throttle Positions	1-354
1-40	Tire Deflation Panel	1-396
1-132	Troop Compartment Stair Ladder	1-550
1-125	Typical Troop Seating Arrangement	1-538
1-87	UHF Radio Panels	1-473
1-97	Vertical Navigation Flight Profile	1-480
1-90	VHF/FM Radio Panel	1-475
1-89	VHF Radio Panel	1-475
1-120	Weight and Balance Computer Panel	1-528
1-119A	Whole Engine Vibration Traces (Frame 4995)	1-526B

GLOSSARY

ADAC	Airplane Docking Alignment Control
AGL	Above Ground Level
AMI	Airspeed/Mach Indicator
ANC	Auxiliary Navigation Computer
AOA	Angle-of-Attack
ARA	Airborne Radar Approach
ATLD	Air Transportable Loading Dock
ATM	Air Turbine Motor
AVVI	Altitude/Vertical Velocity Indicator
ADI	Attitude Director Indicator
AHRU	Attitude Heading Reference Unit
AFCS	Automatic Flight Control System
ATF	Automatic Terrain Following
ATS	Automatic Throttle Subsystem
A/P	Autopilot
APU	Auxiliary Power Unit
BDHI	Bearing, Distance, Heading Indicator
BITE	Built In Test Equipment
CADC	Central Air Data Computer
CARP	Computed Air Release Point
C/D	Control Display
CMA	Central Multiplexer Adapter
CPS	Control Power Supply
CPU	Central Processing Unit
CSD	Constant Speed Drive
CSU	Control and Sequencer Unit
CWS	Control Wheel Steering

GLOSSARY (CONT)

CDPIR	Crash Data Position Indicator/Recorder
DA	Drift Angle
DCOMP	Digital Computer
DRU	Data Retrieval Unit
EMAC	Energy Management Analog Computer
EPR	Engine Pressure Ratio
FDS	Flight Director System
FSS	Fire Suppression System
G/A	Go-Around
GAAS	Go-Around Attitude Subsystem
GS	Ground Speed
HAMS	Heading and Attitude Monitor System
HPPS	High Pressure Pneumatic System
HSI	Horizontal Situation Indicator
IAS	Indicated Airspeed
IDNE	Inertial Doppler Navigation Equipment
IMU	Inertial Measurement Unit
IWBS	Integral Weight and Balance System
IFIS	Integrated Flight Instrument System
KCAS	Knots, Calibrated Airspeed
L/A	Lateral Augmentation
LDCS	Lift Distribution Control System
LPPS	Low Pressure Pneumatic System
LRU	Line Replaceable Unit
MDR	Maintenance Data Recorder
MADAR	Malfunction Detection, Analysis and Recording Subsystem
MMR	Multi-Mode Radar
MMUX	Manual Multiplexer
N_1	Engine Fan RPM
N_2	Engine High Pressure Compressor RPM
ODRU	Oscilloscope and Digital Readout Unit
PACS	Pilot Assist Cable Servo
P/A	Pitch Augmentation
PCI	Peripheral Command Indicator
PLIES	Parachute and Line Integrated Extraction System
PMG	Permanent Magnet Generator
PNC	Primary Navigation Computer
POU	Printout Unit
PPI	Plan Position Indicator
PTU	Power Transfer Unit (Hydraulics)
RAE	Radar Altimeter Equipment
RAT	Ram Air Turbine
Rv Bcn	Rendezvous Radar Beacon
SAR-A	Signal Acquisition Remote Unit - Automatic
SAR-M	Signal Acquisition Remote Unit - Manual
SDC	Signal Data Converter
SKE	Station Keeping Equipment
TAT	Total Air Temperature
TIT	Turbine Inlet Temperature
VFU	Variable Feel Unit
VERNAV	Vertical Navigation System
VSFI	Vertical Scale Flight Instruments
Y/A	Yaw Augmentation

THE AIRPLANE.

The C-5A, manufactured by the Lockheed-Georgia Company, is a long-range, high-speed, high-altitude, sweptwing airplane, designed for use as a heavy logistic transport. The airplane is designed to airlift a wide variety of combat support equipment and personnel. It is powered by four General Electric TF-39 turbofan engines equipped with thrust reversers. Some of the unique design features of the airplane are: a forward and aft cargo door system enabling straight through loading and unloading; a landing gear kneeling system which enables the cargo deck to be tilted nose down or tail down, or to be lowered in the level position; and the capability of airlifting payloads of up to 265,000 pounds. The airplane is equipped with a retractable landing gear which consists of four six-wheel, bogie-type, main landing gears, and a four-wheel, steerable nose gear. Two auxiliary power units, one located in each main landing gear pod, are provided to supply electrical, pneumatic, and hydraulic power (through use of ATMs) for engine starting and for ground operation and maintenance requirements.

AIRPLANE DIMENSIONS.

The principal dimensions of the airplane are:

Span	222 feet, 9 inches
Length	247 feet, 10 inches
Height, Minimum (horizontal stabilizer 4° nose down, landing gear in normal taxi position)	64 feet, 9 inches
Height, Maximum (horizontal stabilizer neutral, landing gear in normal taxi position)	65 feet, 1 inch
Stabilizer Span	68 feet, 9 inches
Tread (centerline of outboard main tires)	36 feet

AIRPLANE GROSS WEIGHT.

The airplane design maximum ramp gross weight is 769,000 pounds.

INTERIOR ARRANGEMENT.

The airplane is divided into three basic compartments: a flight deck, a troop compartment, and a cargo compartment, all of which are pressurized (figure 1-2). The flight deck is divided into a flight station, a relief crew area, and a courier compartment. The relief crew area has two bunk rooms, seating for seven persons, and the necessary storage area. The courier compartment provides seating for eight persons and additional storage area. A galley and lavatory facilities are provided between the relief crew area and the courier compartment. Normal crew movement between the flight deck and the cargo compartment is by a ladder from the cargo floor to the aft end of the flight station. The troop compartment is located above the cargo compartment and aft of the wing. The compartment contains seating for 75 troops, a galley, and lavatory facilities. Movement of personnel between the troop compartment and the cargo compartment is by a ladder from the cargo floor to the aft end of the troop compartment. There are no provisions for personnel movement directly from the troop compartment to the flight deck. The cargo compartment is equipped with a forward cargo door (visor) and ramp and an aft cargo door system and ramp. The visor door, when closed, forms the forward pressure boundary. The forward ramp extension is stowed in the vertical position when not in use. There are three aft cargo doors: center, left and right. The left and right doors are hinged along the outer edge and open outboard. The center door retracts up and aft against the aft fuselage lower surface. The aft pressure door, which is also used as the ramp extension, may be raised to a horizontal position to permit air drop operations.

ENGINES.

The airplane is equipped with four General Electric TF39 turbofan engines (figure 1-7). The TF39 is a dual rotor, variable stator, high bypass ratio, front fan engine. Static bypass ratio for a sea level standard day is 7.88 to 1. The engine has a 16-stage compressor and a 1-1/2 stage fan which, with their respective turbines form two rotor systems that are mechanically independent.

FAN SECTION.

The fan second stage is a 97-inch fan with a mid-span flow splitter. The tip section of the fan produces about twice the pressure rise of the hub section because of the higher blade tip speeds. To offset this characteristic, the inner portion of the fan is supercharged by a first stage fan which extends over about one half the total second stage annulus. The second stage flow splitter separates the single stage outer annulus from the two stage inner annulus. The fan section is driven by a six-stage low-temperature, low speed turbine located aft of the high-speed compressor turbine. At 100 percent RPM, the fan is rotating at 3500 RPM.

COMPRESSOR SECTION.

The engine compressor has 16 stages and develops a pressure ratio of approximately 16:1 at sea level. The compressor inlet guide vanes and the first six stages of stator vanes are variable. Close rotor hub-to-stator vane clearances are maintained by using sprayed on abradable aluminum oxide. The thin stator vane tips contact the aluminum oxide, and through the abrasive action of the aluminum oxide, the vane tips are ground away until the rub has been eliminated. The compressor is driven by a two-stage high-speed turbine. At 100% RPM, the compressor is rotating at 9,827 RPM.

COMBUSTION SECTION.

The combustor is an annular type incorporating an inlet diffuser and thirty vortex inducing swirl cups. The inlet diffuser provides uniform air flow to the combustor over wide variations of inlet flow conditions. The vortex-inducing swirl cups are used (one at each fuel nozzle tip) to provide flame stabilization and mixing of the fuel and air mixture.

ACCESSORY DRIVE SYSTEM.

The accessory drive system consists of an inlet gearbox, a transfer gearbox forward and a transfer gearbox aft. The inlet gearbox, mounted in the engine front frame, is driven by the compressor shaft. A radial shaft transfers power from the inlet gearbox to the transfer gearbox forward which is mounted on the bottom of the fan front frame. Power from the transfer gearbox forward is transmitted by a horizontal drive shaft to the transfer gearbox aft which provides mounting pads for two hydraulic pumps, the starter, the constant speed drive, the lube and scavenge pump, forward scavenge pump, the fuel pump, fuel control, air-oil separator and the N_2 tachometer-generator. The fuel control is mounted on the fuel pump and the N_2 tachometer-generator is mounted on the lube and scavenge pump. The N_1 tachometer generator is mounted inside the hub of the turbine rear frame.

VARIABLE VANE SYSTEM.

The variable vane system maintains satisfactory compressor performance over a wide range of operating conditions. The system varies the angle of the inlet guide vanes and the first six stages of the compressor stator vanes so as to aerodynamically match the low-pressure stages of compression with the high pressure stages. This variation of vane position changes the effective angle at which air flows across the rotor blades. The angle determines the compression characteristics for any particular stage of compression. By varying the vane position in accordance with a predetermined schedule and as a function of compressor inlet temperature and engine speed, the critical low-pressure stages are automatically realigned to maintain satisfactory airflow and compressor performance during all permissible engine operating conditions. Between approximately 60 percent and 92 percent corrected engine speed (measure of weight flow of air through the engine), the variable vanes are positioned in accordance with the variable vane schedule. Below 60 percent, the vanes are fully closed and above 92 percent, fully open.

The variable vanes are positioned by two hydraulic actuators which are operated by fuel pressure from the main fuel control. A variable vane scheduling cam in the fuel control is positioned by compressor inlet temperature signals and engine speed signals. movement of this cam positions a pilot valve which directs high pressure fuel (main fuel pump discharge pressure) to the variable vane actuators which position the vanes through a control linkage system.

ENGINE THRUST.

The primary purpose of the flat-rated engine is to provide constant thrust over a wide ambient temperature range. Below 32°C, the installed engine operating at sea level develops 38,800 pounds of static thrust. Above 32°C, thrust decreases with increasing temperature. The amount of thrust is determined by measuring the ratio between the fan inlet total pressure and the low pressure turbine inlet pressure.

ENGINE FUEL SYSTEM.

The engine fuel system (figure 1-8) regulates the flow of fuel that is sprayed into the engine combustor. When the fuel-air mixture is ignited, sufficient energy is produced to drive both the high-pressure turbine and the low-pressure turbine. Compressor speed, which is developed by the high-pressure turbine, is controlled by the fuel control. Fan speed is developed by the low-pressure turbine and is relative to the energy downstream of the high-pressure turbine.

Fuel from the airplane fuel supply system enters the engine-driven fuel pump boost element. Under boost pressure it is directed out of the fuel pump, through a fuel heater and fuel filter and then back to the fuel pump high pressure element. Fuel under high pressure flows to the fuel control which regulates flow to govern engine speed. Metered fuel then flows through an integral shutoff valve, fuel flowmeter, oil cooler, pressurizing and drain valve, to the fuel manifold and fuel nozzles.

Engine Driven Fuel Pumps.

Each engine is equipped with a two-stage, engine driven fuel pump mounted on the transfer gearbox aft. Each pump consists of a boost impeller, a low-pressure filter, a filter bypass valve, a high-pressure gear element, a high pressure relief valve, and a boost element bypass valve. The low-pressure filter bypass is equipped with a pressure switch to provide a visual indication in the flight station of an impending clogged filter condition.

Fuel Control System.

Core engine speed (N_2) is governed by controlling fuel flow. A governor in the control provides engine speed stability during steady state operation and during transient conditions which require the speed to be rescheduled. The control limits fuel flow variations to ensure fast, stall-free accelerations and decelerations. The control also schedules the variable inlet guide vanes and variable compressor vanes to provide optimum compressor performance under varying operating conditions.

The fuel control combines the inputs of power lever position, shutoff lever position, compressor discharge pressure, compressor inlet temperature, and engine speed to provide a regulated fuel flow for engine operation. On-off control and power lever movement are transmitted to the control through mechanical rotation of two input shafts. Compressor discharge pressure is piped to a sensing bellows within the fuel control. Compressor inlet temperature is sensed by a separate unit that produces a hydro-mechanical signal representing air temperature. Variable vane position is provided by a feedback cable from the variable vane control linkage. A shaft driven by the fuel pump provides engine speed input by use of flyweights and spring pressure.

The fuel control is mounted on the rear face of the fuel pump which in-turn is mounted on the rear face of the transfer gearbox-aft. In addition to metering fuel for combustion, the control provides the following functions:

(1) A positive shutoff of engine fuel flow and inlet pressure limiting when the shutoff lever is moved to the OFF position.

(2) Isochronous engine speed regulation in response to power lever input during steady state conditions.

(3) Transient-rate fuel limiting.

(4) Acceleration and deceleration fuel limiting as a function of compressor inlet temperature (CIT), compressor discharge pressure (CDP), and core engine speed (N_2) which permits unlimited throttle manipulation without causing compressor stall or combustion blowout.

(5) A two-level minimum fuel flow limit as a function of core engine speed (N_2) to provide starting and minimum operating fuel flows. The operating minimum flow provides a minimum engine idle speed under low atmospheric pressure conditions to ensure adequate air supply for cabin pressurization. (Ambient pressure below approximately 8 psi.)

(6) A reduction of fuel flow under high CDP conditions.

(7) Engine overspeed limiting.

(8) A control of the variable vanes and inlet guide vanes as a function of N_2 and CIT.

Fuel Pressurizing and Dump Valve.

Fuel leaving the fuel-oil cooler is ported into the fuel pressurizing and dump valve. This consists of a fuel inlet check valve, a self-relieving filter, a manifold dump valve, and a pressurizing valve. the inlet check valve prevents fuel from draining overboard from the fuel-oil cooler when the engine is not operating. The manifold dump valve opens when the engine is shut down and allows fuel from the primary and secondary manifold to drain overboard, assisted by the air pressure within the combustion chamber which persists until the compressor rotation decreases to a low value.

Fuel Filter Bypass Valve.

The fuel filter bypass valve senses the fuel pressure across the fuel filter. When the differential pressure across the filter exceeds 16 PSI, the bypass valve opens and permits unfiltered fuel to flow directly to the high pressure element of the pump.

Fuel Heater.

The fuel heater is an air-to-fuel heat exchanger which uses compressor discharge air taken from the outer combustion casing to heat engine fuel above the freezing point of water to prevent icing in the fuel system components. Flow of air through the heater is controlled by a solenoid-controlled valve which is opened or closed by a switch in the flight station.

Fuel Manifold and Nozzles.

The fuel manifold provides an even distribution of fuel to the 30 fuel nozzles which spray fuel into the combustor in a uniformly distributed pattern. Fuel nozzles are installed in ten clusters of three. Fuel enters the nozzle and flows down the nozzle shank, through a fuel spin chamber, and exits into the combustor at a spray angle of 90 degrees.

ENGINE FUEL SYSTEM CONTROLS AND INDICATORS.

Engine Fuel Heater Switches.

Four two-position fuel HEATER switches are located on the flight engineer's fuel panel (figure 1-56). Placing a switch to "ON" opens the solenoid-controlled air-operated shutoff valve on the respective fuel heater allowing compressor discharge air to pass through the heater and then overboard. Placing the switch to "OFF" closes the valve. The fuel HEATER switches and solenoid valves receive 115-volt AC power from the forward main AC buses No. 1, No. 2, No. 3, and No. 4 (figures 1-65 and 1-66).

Fuel Temperature Indicator and Selector Switch.

An ENG FUEL TEMP indicator, located on the flight engineer's fuel panel (figure 1-56) is provided to indicate temperature of fuel flowing out of the selected fuel heater. The indicator is graduated from -70 to +150 degrees centigrade. A selector switch (figure 1-53), with positions 1 thru 4 is provided directly beneath the FUEL TEMP indicator. The switch is used to select the desired engine fuel system temperature to be displayed on the FUEL TEMP indicator. The FUEL TEMP indicator receives 28-volt DC power from the main DC bus No. 1 (figure 1-68).

ENGINE IGNITION SYSTEM.

The engine ignition system consists of an ignition exciter, two high tension ignition leads, and two spark-igniters which are installed in the combustor. The high tension leads carry the high ignition voltage from the ignition exciter to the sparkigniters. The ignition exciter unit contains two separate systems. One is a high energy starting ignition system, and the other is a low energy, continuous ignition system.

Continuous Ignition System.

The continuous ignition system is an extended-duty, low-energy system which minimizes the possibility of an engine flameout due to temporary fluctuations under operating conditions other than starting. When the continuous ignition spark igniter is operating, the engine automatically relights as soon as the conditions causing the flameout are corrected.

ENGINE IGNITION SYSTEM CONTROLS.

Continuous Ignition Switch.

A CONTINUOUS IGNITION switch (figure 1-12) is located on the pilots' overhead console. The switch is used to control the continuous ignition systems of all four engines. When the switch is placed to "ON," with the FUEL AND START IGNITION switch in "RUN," 115-volt AC power is fed into the continuous ignition exciter. The current is then passed through a filter, transformer, and rectifier until a high-voltage DC current is obtained which will ionize the gap in the continuous ignition spark igniter and provides a spark as long as the continuous ignition switch is "ON." Continuous ignition will not be available during engine start unless the CONTINUOUS IGNITION switch is "ON." The continuous ignition system receives 115-volt AC power from the forward main AC buses No. 1, No. 2, No. 3, and No. 4 (figures 1-65 and 1-66).

Fuel and Start Ignition Switch.

Four three-position FUEL AND START IGNITION switches (figure 1-12) are provided, one for each engine, on the pilots' overhead console. The switches are provided to control the related ignition systems and fuel shutoff valves. The "RUN" position (with the starter button in) is used for ignition on the ground. In the event ignition does not occur in the "RUN" position, the "AIRSTART" position can be used. Both positions of this switch energize the 28-volt DC motor of the fuel shutoff valve, opening the valve and also energizing the high energy ignition exciter. The "STOP" position closes the fuel shutoff valve and deenergizes the ignition system power source. Power for operation of the fuel shutoff valve is supplied by the 28-volt DC isolated bus (figure 1-64). Power for operation of the high energy ignition exciter is from the 115-volt AC isolated bus (figure 1-64).

ENGINE STARTING SYSTEM.

Each engine is equipped with a starting system consisting of a pneumatic starter, starter control valve, pneumatic ducting, and the starting and ignition control system. The starter, when supplied with pneumatic power, rotates the compressor until a predetermined starter speed has been reached. At this time a cutout switch, located in the starter, is actuated to close the starter control valve and deenergize the high energy ignition system. When the starter control valve is closed, the starter is disengaged from the engine. Pneumatic power, regulated to a maximum of 43 PSI by the starter valve, may be supplied to the starter from an external ground source, APU bleed air or any operating engine through the airplane bleed air system ducting. The starting system provides automatic operation of the starter control valve and ignition system once the STARTER button has been depressed. The FUEL AND START IGNITION switch circuit provides control of the starting fuel and ignition and has no direct control over the engine starter or starter control valve.

ENGINE STARTING SYSTEM CONTROLS AND INDICATORS.

Starter Button.

Four two-position STARTER buttons (figure 1-12) are provided on the pilots' overhead console. The buttons control the opening of the related solenoid-controlled starter control valve. Depressing the button energizes the valve solenoid, opening the valve. A holding coil automatically holds the button in the START position until the starter has reached 46 (±3) percent RPM. A cutout switch then automatically releases the button allowing it to pop out. The button can be manually pulled out at any time to stop the start cycle. A red light in the button will come on when the button is in the start position. A guard is provided around the button to prevent inadvertent energizing of the starter. The engine starter valves receive 28-volt DC power from the isolated DC bus (figure 1-64). The duct overheat protection normally provided by the automatic closing feature of the pylon shutoff, wing isolation, and floor heat shutoff valves is removed when a STARTER button is in the START position.

Starter Valve Light.

Four START VALVE OPEN lights, one for each engine (figure 1-14) are located on the flight engineer's console. A light comes on when the related starter control valve is opened and remains on until the valve is closed. The lights receive 28-volt DC power from the isolated DC bus (figure 1-64).

THROTTLES.

Two sets of four throttles (figure 1-12) are located on the control pedestal. The throttle quadrant has positions marked "FULL REV", and "START IDLE." The engines are started and shut down with the throttles in the "START IDLE" position. Any or all throttles can be moved from the "START IDLE" position by applying forward force on the throttle levers. This part of the quadrant is the flight range, and it is not possible to extend the thrust reversers while the throttle levers are in this area (figure 1-13). Each of the throttles in a set may be manipulated independently, however, the two throttles controlling a common engine are connected and move together. A lift gate at "START IDLE" position prevents inadvertent movement of the throttle levers into the reverse thrust area of the quadrant.

Throttle Friction Lever.

A THROTTLE FRICTION lever (figure 1-12) is located to the right of the pilot's throttles and is moved forward to increase or aft to decrease the friction on both sets of throttles.

INSTRUMENTS.

The engine instruments consist of five integrally lighted, hermetically sealed, vertical scale indicators which are located on the pilots' center instrument panel (figure 1-10) and on the flight engineer's console (figure 1-14). Each instrument monitors engine operating conditions by showing four servodriven vertical tapes against a fixed scale. The instruments are powered by 115-volt AC power. The word OFF is displayed over a portion of the tape to indicate a power-off condition of the instrument. When power is off, the OFF flags may not extend the same amount on all instruments. This situation does not indicate an improperly functioning instrument.

Engine Pressure Ratio (EPR) Indicators.

Engine pressure ratio (EPR) indicators are located on the pilots' center instrument panel (figure 1-10) and on the flight engineer's console (figure 1-14). The EPR indicator shows the ratio of low pressure turbine inlet total pressure to fan inlet total pressure and is graduated from 1 to 7. Each engine is equipped with an EPR transmitter which consists of a pressure ratio sensor that is connected by pneumatic tubing to the pressure sensing probes located in the engine fan case and in the low pressure turbine inlet. The transmitter computes the ratio and transmits the EPR signal to the pilots' and flight engineer's indicators. Each indicator is equipped with digital readout windows above the tapes, a command marker, and a command digital readout window. The command marker and command digital readout are positioned either manually by a switch on the flight engineer's console or automatically by inputs from the energy management analog computer (EMAC). The mode to be used is selected by a switch on the EMAC panel. The manual mode is used to set takeoff EPR as computed from charts in part 2 of T.O. 1C-5A-1-1. The EMAC mode will automatically position the command marker to normal rated thrust EPR or to go-around EPR when the go-around button is depressed. The word MANUAL or EMAC will be displayed on the indicator depending on position of the EMAC selector switch. The EPR indicators receive 115-volt AC power from the isolated AC bus (figure 1-64).

N_1 and N_2 RPM Indicators.

Engine RPM indicators, located on the pilots' center instrument panel (figure 1-10) and on the flight engineer's console (figure 1-14), indicate the speed of the fan (N_1) and the compressor (N_2). The N_1 indicator monitors the individual speeds of all four engine fan rotors, and the N_2 indicator monitors the individual speeds of all four engine compressors. The RPM indicators are graduated from 0 percent to 110 percent RPM. The N_1 indicators receive 115-volt AC power from the forward main AC buses No. 1, No. 2, No. 3,

and No. 4 (figures 1-65 and 1-66). The N_2 indicators receive 115-volt AC power from the isolated AC bus (figure 1-64).

Turbine Inlet Temperature (TIT) Indicators.

Temperature of the gases at the low pressure turbine inlet of each engine is shown on the pilots' center instrument panel (figure 1-10) and the flight engineer's console (figure 1-14). The indicators are graduated from 0 to 1000 degrees centigrade and receive 115-volt AC power from the forward main AC buses No. 1 No. 2, No. 3, and No. 4 (figures 1-65 and 1-66).

Fuel Flow Indicators.

Fuel flow indicators are located on the pilots' center instrument panel (figure 1-10) and the flight engineer's console (figure 1-14). Each indicator shows fuel flow in 1000 pounds per hour, and is graduated from 200 to 16,000 PPH. The indicators receive 115-volt AC power from the forward main AC buses No. 1, No. 2, No. 3, and No. 4 (figures 1-65 and 1-66).

Oil Temperature Indicators.

Four engine oil temperature indicators, one for each engine, are located on the flight engineer's console (figure 1-14). Each indicator is graduated from -50 to 200°C and indicates temperature of the oil from the scavenge pump of the respective engine prior to entering the fuel oil cooler. The indicators receive 28-volt DC power from the main DC buses No. 1 and No. 2 (figures 1-67 and 1-68).

Oil Pressure Indicators.

Four engine oil pressure indicators, one for each engine, are located on the flight engineer's console (figure 1-14). An oil pressure transmitter is installed between the discharge line of the lube pump and the sump vent subsystem. The transmitter converts the differential of these two pressures into an electrical signal which is transmitted to the respective oil pressure indicator. The indicators receive 26-volt AC power from the AC instrument buses No. 1, No. 2, No. 3, and No. 4 (figures 1-65 and 1-66).

Low Oil Pressure Lights.

Four LOW OIL PRESSURE lights, one for each engine, are located on the pilots' center instrument panel (figure 1-10). A light comes on, when the pressure differential between the discharge line of the lube pump and the sump vent subsystem decreases below 8.25 PSI differential minimum, and goes out when the pressure increases above 9.75 PSI differential. The lights receive 28-volt DC power from the main DC buses No. 1 and No. 2 (figures 1-67 and 1-68).

Oil Filter Differential Pressure Lights.

Four ENG OIL FIL DIF PRESS lights, one for each engine, are located on the flight engineer's console (figure 1-14). A light comes on when the pressure differential across the respective engine scavenge filter increases to 32 PSI maximum and goes out when the pressure differential drops to 28 PSI minimum. The lights receive 28-volt DC power from the main DC buses No. 1 and No. 2 (figures 1-67 and 1-68).

Engine Oil Quantity Indicators.

Four engine oil quantity indicators, one for each engine, are located on the flight engineer's console (figure 1-14). The indicators are graduated from E (empty) to F (full) in 1/16 of a tank increments and receive signals from nucleonic transistorized oil quantity detectors installed on the engine oil tanks. The F (full) mark represents 9 gallons of oil, and the E (empty) mark represents one gallon of oil remaining. Each 1/16 increment represents two quarts of oil. The oil quantity indicating system indicates only the oil in the tank. During engine operation, the oil level within the tank decreases from the full or static level so that the operating level, as indicated by the oil quantity indicator, may decrease as much as four increments on the indicator (two gallons). This decrease in oil level is termed "gulping" and is attributed to oil that has collected on bearings, sump walls, within scavenge pump inlet lines, etc. However, when the engine is shut down, the oil not consumed by the engine will be returned to the tank. A test button located on each indicator is provided to functionally test the indicator. Depressing the test button causes the indicator needle to move to the 3/16 mark if the indicating system is functioning properly. The indicators receive 115-volt AC power from the forward main AC buses No. 1, No. 2, No. 3, and No. 4 (figures 1-65 and 1-66).

Note

Because the Nucleonic system produces random pointer movement, the indicator will not stabilize at a specific point on the dial. Quantity indication is determined by averaging the readings. If the indicator pointer does not have random movement, the system is not operating properly.

ENGINE OIL SYSTEM.

Each engine is provided with an integral non pressure-regulated oil system which includes an oil tank with a total volume of 12.9 gallons. The tank fill level is 9.1 gallons and the operating level is 6.1 gallons. Oil flows from the tank to a gear-type, engine driven pump which supplies oil to the engine bearings and accessory section. Scavenge pumps remove oil from these areas

and return it to the oil tank through a scavenge filter and a fuel/oil cooler. These coolers are of the fuel-oil type and are thermostatically controlled. To monitor the oil system, each engine has a ENG OIL FIL DIF PRESS light, an oil pressure indicator, an oil temperature indicator, and an oil quantity indicator. For oil servicing information, see figure 1-1.

ENGINE OVERHEAT AND FIRE DETECTION SYSTEM.

The airplane is equipped with a continuous loop, variable resistance fire and overheat detection system. The system provides a visual indication in the flight station of an engine fire or overheat condition. If a short circuit develops in the detector loop for an engine, it will be locked out by the respective short discriminator circuit for that engine. In this event, the fire warning or overheat light will not come on for the respective engine during the fire warning or overheat test. If a fire occurs, fire or overheat detection capability may not be available. If an open circuit develops in a detector loop, the respective fire warning test will be operative and the overheat test inoperative. In this event, if a fire occurs, fire and overheat detection capability is still available.

Note

During the short discriminator test, if either fire warning light comes on, the short discriminator circuit is inoperative. A false fire warning would be indicated if a shorted loop system should develop for the respective engine.

On 90012 and up and airplanes modified by T.O. 654, a continuous loop, variable resistance overheat element is installed in the lower center pylons. The engine overheat and fire detection system receives 28-volt DC power from the main DC buses No. 1 and No. 2 and from the isolated DC bus (figures 1-64, 1-67 and 1-68).

Fire and Overheat Warning Lights.

An engine overheat condition is indicated in the flight station by the flashing of the associated ENG OVHT warning light on the pilots' center instrument panel (figure 1-10) and also by the flashing of the associated ENG FIRE light on the flight engineer's console (figure 1-15). An engine fire is indicated by steady illumination of the associated engine fire handle (figure 1-15), by steady illumination of the associated ENG OVHT warning light and by steady illumination of the associated ENG FIRE light on the flight engineer's console.

Engine and APU Fire Detect Test Switch.

An ENG and APU FIRE DETECT TEST switch is located on the flight engineer's console (figure 1-15). The switch is provided to test the fire detection circuits in the engines, nacelles, pylons, and APU compartments. The switch also tests the APU fire audible warning system when the airplane is on the ground causing the warning horns to sound. Placing the switch to "FIRE" causes all engine fire and overheat and APU fire warning lights to come on steady. For a description of APU fire indicators, see Auxiliary Power Units in this section. Placing the switch to "ENG OVHT" causes all engine overheat lights on the pilot's center instrument panel and all engine fire warning lights at the engineer's console to flash. The switch receives 28-volt DC power from the isolated DC bus (figure 1-64).

Note

Tolerances in the fire test circuit may cause the lights to blink before coming on steady when the FIRE DETECT TEST switch is placed to "FIRE."

Short Discriminator Test Switch.

A SHORT DISCR switch (figure 1-15), with a momentary "TEST" position, is provided on the flight engineer's console to check that the fire detection system short discriminator in the fire detection circuits is functioning properly. Placing the switch to "TEST" inserts a short into the fire detection circuits. Proper operation of the short discriminator is then indicated by failure of the fire warning lights to come on when the FIRE DETECT TEST switch is placed to "FIRE."

ENGINE FIRE EXTINGUISHER SYSTEM.

A high-rate-discharge fire extinguishing system is provided, using dibromodifluoromethane (CBr_2F_2) as the agent. Two identical subsystems are installed, one in each inboard pylon. Each subsystem serves the two engines on its side of the airplane and provides two discharges to one nacelle, or one discharge to each nacelle. The fire extinguishing agent is piped to the upper forward section of the engine which encloses the high pressure compressor and to the upper aft section which encloses the combustion-turbine section. The agent will flow down and around both sides of the engine. The fire extinguishing agent is contained in four nitrogen pressurized spherical bottles, two of which are located in each inboard engine pylon. The fire extinguishing system receives 28-volt DC power from two independent sources: the battery bus and the isolated DC bus (figure 1-64).

WARNING

The engine fire extinguishing system uses dibromodifluoromethane (CBr_2F_2) as an extinguishing agent. This agent is a non-volatile, colorless, heavy liquid with a sweet odor resembling chloroform. It can be harmful to humans after prolonged contact in vapor or liquid form; accordingly it should be handled with caution.

Each bottle has two outlets (each actuated by pyrotechnic squib) and a pressure indicator. One outlet of each bottle is connected to one outlet of the other bottle so that either bottle can be discharged into either nacelle.

Engine Fire Handles.

Four engine fire handles (figure 1-15) are located just above the pilots' center instrument panel. Pulling a fire handle accomplishes the following:

(1) Shuts down the engine by electrically closing the engine fuel control shutoff valve and turning off engine ignition.
(2) Deenergizes the generator by interrupting Permanent Magnet Generator power.

(3) Shuts off the flow of fuel into the nacelle by mechanically closing the cable-operated shutoff valve which is mounted on the front wing spar.

(4) Shuts off the supply of hydraulic fluid to the related engine driven hydraulic pumps by closing the electrically operated hydraulic shutoff valves mounted on the front wing spar and depressurizes the pumps.

(5) On 00453 and up and airplanes modified by T.O. 1232, closes valve in each thrust reverser hydraulic pressure line in the pylon leading edge, and on engines No. 2 and 3, de-activates the thrust reverse emergency retract valve.

(6) Shuts off all compressor bleed airflow from the affected engine by closing the electrically controlled bleed air shutoff valve in the pylon.

(7) Exposes the fire extinguisher discharge button.

(8) De-energizes the starter control valve to the closed position.

Fire Extinguisher Discharge Buttons.

Four PUSH TO DISCHARGE buttons, located above the pilots' center instrument panel (figure 1-15), provide fire extinguishing agent to any engine that indicates fire. Each button is protected by a plastic cover which is a part of the fire handle. The fire handle is normally pulled out first to expose the button, and then the button is depressed. However, the button may be depressed at any time by pressing on the plastic cover. Depressing a discharge button fires the appropriate pyrotechnic squib on one of the bottle outlets, discharging the agent into the selected engine nacelle.

Fire Extinguisher Bottle Select Switches.

Two fire extinguisher BOTTLE SELECT switches, are located on the fire emergency shutoff panel (figure 1-15). The switches provide the capability of discharging one or both of the bottles into a single nacelle. Depressing a fire extinguisher discharge button with the BOTTLE SELECT switch in "NORMAL" causes one bottle to be discharged into the selected engine nacelle. Moving the switch to "ALTERNATE" and again depressing the same discharge button causes the second bottle on that side to be discharged into the same engine nacelle.

WARNING

After an engine fire has been extinguished by using one bottle only, do not move the BOTTLE SELECT switch for that wing to its "ALTERNATE" position. Leaving the BOTTLE SELECT switch in the "NORMAL" position will assure that if a fire occurs in the other engine on that side, the remaining bottle will be available.

Fire Extinguisher Bottle Out Lights.

Four fire extinguisher BTL OUT lights, one for each bottle, are located on the fire emergency shutoff panel (figure 1-15). The lights come on when their respective fire extinguisher bottle charge pressure decreases below a preset temperature or pressure. The lights receive 28-volt DC power from the main DC bus No. 1 (figure 1-68).

Bottle Pressure Indicators.

Each bottle is equipped with a combination temperature compensated pressure switch and a visual indicator. Access to the bottles and to the indicator is through the maintenance access door in the side of each inboard pylon. Since the switch is temperature compensated, preflight checks of the bottle condition can be made by observing that the BTL OUT lights on the fire emergency shutoff panel are not on.

ENGINE THRUST REVERSER SYSTEM.

Each engine is equipped with a thrust reverser system installed in the fan cowl afterbody (figure 1-7). Reverse thrust is equal to approximately 37 percent total engine forward thrust. The system reverses fan exhaust only and consists basically of a fixed cascade, a translating cowl, blocker flaps, and the actuating mechanism.

The fixed cascade is arranged around the fan cowl and consists of vanes positioned so as to direct fan exhaust in a forward direction.

The translating cowl which forms the aftermost portion of the fan cowl is movable forward and aft and is positioned by four hydraulic actuators. When the translating cowl is in the forward position (forward thrust), it completely covers the inner and outer circumferences of the fixed cascade. When it is moved aft, it uncovers the fixed cascades so that fan exhaust can be directed through the cascades in a forward direction.

The blocker flaps are provided to block the flow of fan exhaust through the normal fan exhaust nozzle so that it must pass through the cascades. These flaps are hinged along their forward edge to the inner circumference of the translating cowl. Blocker links connect the aft end of each flap to the fan inner cowl. They are attached in such a manner that they pivot about the flap attach point and the fan inner cowl attach point. As the translating cowl moves aft the blocker links rotate to pull the aft end of the blocker flaps down against the fan inner cowl, thus blocking flow out of the fan exhaust nozzle.

The thrust reverser system is designed for two-position operation only: stowed (forward thrust) or extended (reverse thrust). Transition from forward to reverse, and vice versa is accomplished by throttle lever movement. Normal hydraulic power for each engine thrust reverser is supplied by the hydraulic system of the respective engine.

Thrust Reverser System Ground Operation.

All four thrust reversers may be extended by throttle movement any time a touchdown or spinup signal is present. To accomplish this, the throttles must be moved aft to the idle gate, lifted, and moved aft over the gate. As a throttle is moved aft, a limit switch is actuated which opens a hydraulic shutoff valve to pressurize the thrust reverser system. A pressurized thrust reverser system is indicated by a light on the flight engineer's console (figure 1-14). Continued aft movement of the throttle mechanically positions a hydraulic selector valve to extend the thrust reverser in the following sequence:

(1) An interlock in the thrust reverser control valve prevents throttle movement aft of reverse idle.

(2) Hydraulic pressure is directed to unlock the translating cowl actuators in sequence.

(3) When the actuators are unlocked, hydraulic pressure is directed to a thrust reverser control valve which directs pressure to extend the translating cowl actuators to effect reverse thrust.

(4) When the translating cowl actuators are between 92 and 97 percent extended, the mechanical throttle interlock is removed to permit throttle movement to full reverse thrust.

When the reverser is fully deployed, hydraulic pressure to the system is shut off and the reverser is held in position by air loads. As the throttles are moved forward out of reverse thrust, the above sequence is reversed. The translating cowl actuators retract and are locked in position by the actuator locks, and hydraulic pressure is vented from the system.

CAUTION

On 90015 and up and airplanes modified by T.O. 927 but not modified by T.O. 1232, do not operate the thrust reversers by the normal or emergency method with the engine fire handle pulled. Rupture of the return line between the thrust reverser actuator control valve and the emergency shutoff valve may result. On 00453 and up and airplanes modified by T.O. 1232, the thrust reversers will not operate with the engine fire handle pulled.

Thrust Reverser In-Flight Operation.

In-flight operation of the thrust reversers is limited to the two inboard engines in reverse idle. To accomplish this, the throttles must be moved aft to the idle gate, lifted, and moved aft over the gate to reverse idle.

WARNING

Do not move throttles beyond reverse idle.

In the event of a hydraulic system failure while the inboard thrust reversers are extended an emergency hydraulic retract system may be actuated by switches in the flight station. The emergency retract system uses hydraulic pressure from the adjacent outboard engine hydraulic system.

CAUTION

On 90015 and up and airplanes modified by T.O. 927 but not modified by T.O. 1232, do not operate the thrust reversers by the normal or emergency method with the engine fire handle pulled. Rupture of the return line between the thrust reverser actuator control valve and the emergency shutoff valve may result. On 00453 and up and airplanes modified by T.O. 1232, the thrust reversers will not operate with the engine fire handle pulled.

Thrust Reverser Lockout.

Throttle quadrant interlocks are actuated through the touchdown and spinup signals. In flight these stops are actuated to prevent the outboard throttles from being moved into the reverse thrust range and to prevent the inboard throttles from being moved aft

of reverse idle. These interlocks may be overridden by exerting a force of approximately 35 pounds on the throttles. Inflight operation of the two inboard thrust reversers is the same as ground operation except that when the inboard throttles are in the reverse thrust range, mechanical interlocks in the throttle quadrant prevent the throttles from being moved into the forward thrust range until the thrust reversers are closed and locked. These interlocks may also be overridden by exerting a force of approximately 35 pounds on the throttles. On the ground a spinup and/or touchdown signal will remove the lockout.

CAUTION

After take-off, the thrust reverser interlock will not be activated until after the MLG wheels spindown. This situation will allow operation of the thrust reversers on engines No. 1 and No. 4 or operation of the thrust reversers on engines No. 2 and No. 3 beyond reverse idle.

THRUST REVERSER SYSTEM CONTROLS AND INDICATORS.

Reverse Thrust Limiter Knob.

A REVERSE THRUST LIMITER knob (figure 1-12), located on the control pedestal, provides a means of setting a limit to the reverse thrust that can be applied. Numbers on the periphery of the knob align with an index mark to permit setting of the reverse thrust by index number in accordance with a chart in part 2 of T.O. 1C-5A-1-1. The numbers on the knob are illuminated by a post light located adjacent to the index marker. Rotating the knob changes the mechanical advantage between the throttle levers and the related fuel control power levers. The knob incorporates stops to indicate the knob extreme positions. Refer to part 2 of T.O. 1C-5A-1-1 for thrust reverser limiter settings.

Reverse Thrust Emergency Retract Switches.

Two REVERSE THRUST EMERG RETRACT switches are located on the control pedestal (figure 1-12). The switches are provided to select an alternate source of hydraulic pressure to retract the inboard thrust reversers if the normal hydraulic system fails. When a switch is in "NORMAL", the normal thrust reverse control circuits are armed, permitting thrust reverser operation with the throttle. Holding the switch to the spring-loaded "RETRACT" position deenergizes the normal thrust reverser circuits and opens an emergency control valve which directs hydraulic pressure from an alternate system to close the reverser. In the "OFF" position, all control circuits are deenergized, the emergency control valve is closed, and pressure is vented from the system. The switches and solenoid valves receive 28-volt DC power from the isolated DC bus (figure 1-64).

Thrust Reverser Hydraulic Pressure Lights.

Four THRUST REV PRESSURE lights, one for each thrust reverser hydraulic system (figure 1-14) are located on the flight engineer's console. A light comes on when the respective thrust reverser hydraulic system is pressurized. The lights receive 28-volt DC power from the main DC buses No. 1 and No. 2 (figures 1-67 and 1-68).

Thrust Reverser Not Locked Lights.

Four TH REV N LKD lights, one for each thrust reverser, are located on the pilots' center instrument panel (figure 1-10). A light comes on when any one of the four locks of the respective translating cowl is in the unlocked position. The lights receive 28-volt DC power from the isolated DC bus (figure 1-64).

Thrust Reverser Extended Lights.

Four TH REV EXTD lights, one for each thrust reverser, are located on the pilots' center instrument panel (figure 1-10). A limit switch in each thrust reverser closes to complete a circuit to the respective light when the thrust reverser is fully extended. The lights receive 28-volt DC power from the isolated DC bus (figure 1-64).

ALTERNATE ENGINE STARTING PROCEDURE.

If it becomes necessary to make an engine start when external or APU electrical power cannot be connected to the tie bus and previous starts and shutdowns were under normal circumstances, proceed as follows:

Brief the scanner on hand signals to be used as there will be no interphone. Engine fire extinguishing will be available but the fire detection system will be inoperative. When the isolated buses are powered by the emergency generator, the pilot will turn on the No. 1 UHF radio and call for a fire truck.

The flight engineer will accomplish the following:

1. Battery Switch - AS REQUIRED

If both batteries are charged or the standby battery is disconnected, place the battery switch to NORM. If the normal battery is disconnected, place the battery switch to STBY.

2. Left APU - START

Check with the scanner that the left APU is clear for starting. Check that the door open light, start light, and on speed light come on.

3. Left APU Bleed Valve - OPEN

4. Sys 1 ATM - ON
   a. Sys 1 ATM Pump Switch - ON
   b. Sys 1 ATM Start Switch - START

5. System 1-2 PTU - ON

6. Right APU - START
Check with the scanner that the right APU is clear for starting. Check that the door open light, start light, and on speed light come on.

7. Right APU Bleed Valve - OPEN

8. Air Cond Master Switch - OFF

9. APU Iso Valves - OPEN

The pilots will accomplish the following:

1. No. 1 UHF Radio - ON

2. Throttles - START

3. Brake Switch - AS REQUIRED
The copilot will place the Brake Switch to EMER. If the emergency brake accumulator is not properly charged, place the Brake Switch to ALT.

4. Parking Brake - SET

5. No. 1 Engine - START
The pilot will check with the scanner that the No. 1 engine is clear to start and advise the flight engineer that the No. 1 starter button is being engaged. When N_2 RPM reaches 11 percent, place the Fuel and Start Ignition switch to RUN.

CAUTION

If N_2 RPM does not accelerate continuously during the start, discontinue the start. A hung start could result in damage to the engine.

Note

When electrical power is available on the tie bus, check engine instruments for normal indications.

AUXILIARY POWER UNITS (APU).

Two APU's (figure 1-17), one located in each main landing gear pod, supply air to the bleed air manifold. Each APU also drives an 80-KVA generator for auxiliary electrical power. The APUs are normally for ground use only. Inflight use for normal operation is prohibited as excessive heat will cause external skin damage. APUs shall be operated in flight for emergency use only. Each APU consists of a compressor assembly, power turbine assembly, and an accessory assembly. The APU door control, start valve and fuel valves, located at the wing spar and cargo compartment area, receive 28-volt DC power from the battery bus (figure 1-64).

COMPRESSOR ASSEMBLY.

The APU compressor assembly is a centrifugal-type which discharges compressed air through a diffuser into an annular plenum. The air flows aft from the plenum into a four-inch bleed port and the combustor.

POWER TURBINE ASSEMBLY.

The power turbine assembly consists of an annular combustion chamber and a two-stage axial turbine assembly.

ACCESSORY ASSEMBLY.

The APU accessory assembly consists of a starter, oil pump, oil cooler, fuel control, cooling fan, permanent magnet generator (PMG) and an 80-KVA AC generator. The accessories with the exception of the starter and generator are driven through a reduction gear train connected directly to the compressor drive shaft. The starter is coupled to the drive shaft through a clutch which is disengaged when the APU is running. The generator is coupled to the rotating assembly through an overrunning clutch which allows momentary paralleling while power is being switched from APU generator to engine generator or vice versa.

APU OIL SYSTEM.

The oil system provides lubrication for all gears and shaft bearings. Oil from an integral gear case oil sump is delivered to the gears and bearings through the oil pump. A relief valve in the oil system maintains the desired oil pressure. Oil temperature is maintained within acceptable limits by an oil cooler which receives air from the cooling fan. An oil pressure switch automatically shuts down the APU during ground operation when oil pressure drops below a set limit.

APU FUEL SYSTEM.

Fuel is supplied by gravity feed to the left and right APU's from the No. 2 and No. 3 main fuel tanks respectively. Fuel flows from the tank through a motor-operated shutoff valve located on the wing aft beam to another motor-operated shutoff valve located in the APU area of the cargo compartment. Fuel then flows

into the APU compartment to the APU disconnect panel. From the disconnect it flows through a filter, and then to the APU fuel control unit. From the fuel control unit, fuel flows through a solenoid-operated shutoff valve to the combustion chamber through the fuel nozzles. The solenoid-operated fuel shutoff valve will close and shut down the APU whenever the APU CONTROL switch is placed to "STOP," when APU RPM exceeds 110 percent, when oil pressure falls below the set limit, or when APU PMG control power is lost.

APU STARTING SYSTEM.

Each APU is equipped with a starting system which consists of a hydraulic starter motor, a hydraulic accumulator, a hydraulic shutoff valve, and a handpump. The left APU start accumulator is normally pressurized from the No. 1 hydraulic system and the right APU accumulator is normally pressurized by the No. 4 hydraulic system. However, they may also be pressurized by an external ground cart or by the handpump. When an accumulator is fully charged, it will supply sufficient hydraulic fluid under pressure to start the APU. Charts located on the structure adjacent to each APU accumulator give the precharge air pressure.

APU SPEED CONTROL.

Speed of the APU is controlled by an electronic fuel control unit which regulates fuel flow into the combustion chamber to maintain a constant speed under varying load conditions.

APU CONTROLS AND INDICATORS.

The normal operating controls and indicators are located on the APU control panel (figure 1-18) on the flight engineer's console.

APU Control Switches.

Two APU CONT switches are located on the APU panel (figure 1-18). When a switch is placed to "START," the following actions occur:

(1) The wing fuel valve for the selected APU opens.

(2) Electrical power is applied to open the APU inlet door approximately 1/3 open.

(3) When the fuel valve and APU door are open, the associated APU starter valve opens, allowing hydraulic pressure from the accumulator to run the starter motor.

At approximately 10 percent RPM, the APU permanent magnet generator supplies power to open the APU fuel solenoid valve and provide ignition. At approximately 35 percent RPM, the APU inlet door moves to full open and the starter valve closes, disengaging the starter motor. At 95 percent RPM, ignition is deenergized and an underfrequency relay is energized which allows application of a load to the APU driven generator. When a switch is placed to "STOP" the overspeed circuit is tripped, causing the APU fuel solenoid valve to close. Power is also applied to close the wing fuel valve. At 95 percent RPM, the generator is deenergized, and at 10 percent, the APU inlet door closes.

APU Bleed Valve Switches.

Two APU BLEED VALVE switches are located on the APU panel (figure 1-18). Power for operation of each bleed valve solenoid is from the respective APU permanent magnet generator. The BLEED VALVE switch provides a ground for this power. Placing the switch to "OPEN" opens the respective bleed valve. An interlock circuit prevents power from being applied to open the bleed air valve if the APU RPM is below 95 percent. Placing the switch to "CLOSE" closes the respective bleed valve.

APU Isolation Valve Switches.

Two, two-position APU ISO switches, located on the environmental panel (figure 1-21), control the APU isolation valves. Placing these switches to "OPEN," opens the respective APU isolation valve and allows APU bleed air to pressurize the bleed air manifold. Placing these switches to "CLOSE," closes the isolation valves. The left APU ISO switch routes 28-volt isolated DC bus power (figure 1-64) to the valve. The right APU ISO switch routes 28-volt main DC bus No. 2 power (figure 1-67) to the valve.

APU Exhaust Gas Temperature (EGT) Indicator.

Two APU EGT indicators, one for each APU, are located on the APU panel (figure 1-18). Each indicator is graduated from 0 to 1200 degrees centigrade in 100 degree increments. A vernier dial on the indicator face is graduated from 0 to 100 degrees centigrade in 10 degree increments. When power is supplied to the indicator, a flag covers the word OFF on the indicator face. If power failure occurs, the flag will move to expose the word OFF. The APU EGT indicators receive 115-volt AC power from the isolated AC bus (figure 1-64).

APU Door Open Lights.

Two APU DOOR OPEN lights, one for each APU inlet door, are located on the APU panel (figure 1-18). Either light comes on when the respective APU door is 1/3 or more open. The lights receive 28-volt DC power from the battery bus (figure 1-64).

APU Start Lights.

Two APU START lights, one for each APU, are located on the APU panel (figure 1-18). Either light comes on when the APU start relay is energized by placing the respective APU control switch to "START." The light remains on until the APU start relay is deenergized at 35 percent RPM. The lights receive 28-volt DC power from the battery bus (figure 1-64).

APU On Speed Lights.

Two APU ON SPEED lights, one for each APU, are located on the APU panel (figure 1-18). Either light is on when the associated APU RPM is above 95 percent. The lights receive 28-volt DC power from the battery bus (figure 1-64).

APU Isolation Valve Open Lights.

Two APU ISO VALVE OPEN lights, one for each APU isolation valve, are located on the environmental panel (figure 1-21). The lights come on when their respective APU isolation valve opens.

The left APU ISO VALVE OPEN light receives 28-volt DC battery bus power (figure 1-64). The right APU ISO VALVE OPEN light receives 28-volt main DC bus No. 2 power (figure 1-67).

APU OPERATION.

Either or both APU's may be operated on the ground.

CAUTION

APU operation in flight should be limited to actual emergencies. The airplane skin aft of the APU exhaust duct will be damaged anytime the APUs are operated in flight for more than three minutes.

Note

The airplane must be slowed to 170 KCAS in order for the APU inlet door to close. The DOOR OPEN light may remain on in excess of one minute, depending on the airspeed when the APU control switch is placed to "STOP."

Starting the APU.

1. APUs and ATMs - CHECKED

   a. Drains, Vents and Exhaust Ducts - CLEAR

   b. APU Oil Quantity - CHECKED

   c. APU Fire Extinguisher Bottle Pressure - CHECKED

   d. ATM Accumulator - CHECKED

2. APU Start Accumulator - CHECKED

Check that the start accumulator is charged to a minimum of 2800 PSI (0°F and above).

3. APU Emergency Controls (Loadmaster FWD Panel) - SET

   a. APU Fire Handles - IN

   b. Bottle Select Switch - NORM

4. Radio - ON/CHECKED

If external power is connected, turn the radio on and tune it to the tower/ground control frequency.

5. Battery Voltage - CHECKED

With the Battery switch OFF, check the normal and standby battery voltages. The battery voltages shall not be less than 22.5.

CAUTION

The Battery switch must not be placed to NORM or STBY unless the respective battery has a charge of at least 22.5 volts. If the battery voltage is less than 22.5 volts and power is applied to the airplane with the Battery switch in NORM or STBY, damage may occur to the battery. If the voltage is less than 22.5, the battery shall be replaced or disconnected if a replacement is not available.

WARNING

At least one battery must be serviceable and connected to the battery bus to provide power for APU fire extinguishing and isolation.

6. Battery Switch - AS REQUIRED

If both batteries are charged or the standby battery is disconnected, place the Battery switch to NORM. If the normal battery is disconnected, place the Battery switch to STBY.

7. Electrical Panel - SET

a. Isolated Bus Switch - NORM

b. Bus Tie Switches - NORM

c. Monitor Bus Switches - NORM

d. APU Generator Selector Switch - AS REQUIRED

Place the APU generator selector switch to the position corresponding to the first APU to be started.

e. APU/Ext Pwr Switch - AS REQUIRED

If external power is connected, check that the voltage and frequency are normal, then place the APU/Ext Pwr switch to EXT PWR and check that all bus lights and bus tie lights are off. If external power is not connected, place the APU/Ext Pwr switch to APU.

8. Isolated AC Bus Instrument Ground Switch - ON

9. APU Fire Extinguisher Bottle Select Switch - NORM

10. APU Fire Handles - IN

11. APU Fire Detection System - CHECKED

a. Eng & APU Fire Detect Test Switch - FIRE CHECK:

Lights in APU Fire Handles - ON

Lights in Cargo Compartment

APU Fire Handles - ON

APU Fire Light (Pilots' Annunciator Panel) - ON

Audible Warning - SOUNDS

12. APU Bleed Valve Switches - CLOSE

13. APU Clear for Starting - CLEAR

Check with the ground crew that the APU is clear for starting and that they are in position to monitor the start. If external power is not available, APU starting must be coordinated without the use of interphone. If an APU fire occurs during APU start and intercommunications is not available, the ground crew shall immediately notify the flight deck crew member of the condition. The ground crew shall not attempt to fight the fire through the APU compartment push-in-door until the APU start has been terminated.

CAUTION

If the APU is started on battery power, the fire detection and warning system will be inoperative during the start.

Note

If external power is not available, a fire truck must be standing by during APU starting and single APU operation.

14. APU Cont Switch - START/RUN

Hold the APU Cont switch in the START position until the door open light and the start light comes on, then release the switch to RUN.

CAUTION

If the on speed light does not come on within 30 seconds (0°F and above) or 60 seconds (-65° to 0°F) after the start light comes on, place the APU Cont switch to STOP. Do not attempt a restart until the malfunction has been corrected.

15. APU EGT - MONITORED

Note

If the APU is started on battery power, the EGT indicator is inoperative until AC power is available.

16. APU Generator - CHECKED

Check:

APU Gen Fail Light - OFF

APU Gen Out Light - OFF

Voltage and Frequency - NORMAL

17. APU/Ext Pwr Switch - AS REQUIRED

If external power is to be disconnected, place the APU/Ext Pwr switch to APU and check that the APU generator is powering all buses except the monitor buses. Then place the Mon Bus switches to OVRD.

18. APU Fire Detection System - CHECKED

If external power was not available prior to APU start, perform steps 10 and 4.

Loading the APU.

1. APU Iso Switches - OPEN
2. APU Bleed Valve Switch - OPEN

Place the Bleed Valve switch to OPEN to pressurize the bleed air manifold.

Stopping the APU.

1. APU Bleed Valve Switch - CLOSE
2. APU/Ext Pwr Switch - AS REQUIRED

If external power is connected, place the APU/Ext Pwr switch to EXT PWR. If external power is not connected, place the switch to OFF.

3. APU Generator Selector Switch - OFF
4. APU Cont Switch - STOP

Check that the on speed and door open lights go off.

Note

Allow APU EGT to stabilize before placing the APU Cont switch to STOP.

5. Isolated AC Bus Instrument Ground Switch - AS REQUIRED.

If electrical power is to be removed from the airplane, place the switch to OFF.

6. Battery Switch - AS REQUIRED

If external power is not connected, place the Battery switch to OFF.

Note

The Battery switch must be in OFF after APU and external power are removed and the DC voltmeter selector must be in a position other than NORM BATT or STBY BATT to prevent complete battery discharge.

APU FIRE DETECTION AND WARNING SYSTEM.

CAUTION

If battery power is being used as the power source during starting and shutdown of the APU, the APU fire detection and warning system will be inoperative. The APU fire detectors operate on power from the 28-volt isolated DC bus (figure 1-64).

Each APU is equipped with a fire detection and warning system. A fire in an APU compartment actuates a sensing element located in the APU exhaust ejector area. The sensing element sends a signal through an engine and APU fire control unit which provides a visual indication on the flight engineer's console, the pilots' annunciator panel, and the loadmaster's forward control panel.

Each ATM is equipped with a fire detection and warning sensor circuit. This sensor circuit is connected to the APU fire detection and warning system circuit. If an ATM fire occurs, the sensing element sends a signal to the APU fire detection and warning system.

If the airplane is on the ground, a fire in either APU compartment will also activate the audible warning horn system. The fire warning horn can be silenced only when the fire has been put out or the appropriate circuit breaker is opened.

Fire Warning Lights.

A fire warning light for each APU compartment is located in the plastic fire handle for the respective APU. The respective light will come on steady when the sensor in the associated APU compartment senses a temperature above the set limit. APU fire handles are located on the flight engineer's console and on the loadmaster's left forward control panel. The lights receive 28-volt DC power from the isolated DC bus (figure 1-64). An APU FIRE light, located on the annunciator panel (figure 1-128), comes on whenever a fire is detected in either APU compartment.

Engine and APU Fire Detect Test Switch.

An ENG & APU FIRE DETECT TEST switch is located on the flight engineer's console (figure 1-18). The switch is provided to test the fire detection circuits in both APU compartments. Placing the switch to "FIRE" causes the APU fire warning lights in the fire handles at the flight engineer's station and at the loadmaster's left forward control panel and the APU FIRE light on the pilots' annunciator panel to come on. When the airplane is on the ground, the

"FIRE" position will also activate the audible warning horn system. The "ENG OVHT" position has no effect on the APU fire detection system.

APU FIRE EXTINGUISHING SYSTEM.

The APU fire extinguishing system is a dual, high-rate-discharge system using dibromodifluoromethane as the extinguishing agent. The two agent bottles are pressurized by nitrogen and are located in the lower aft corner of the right aft main landing gear wheel well. The system is capable of discharging one bottle into each APU compartment, or both bottles into one compartment.

WARNING

The APU fire extinguishing system uses dibromodifluoromethane ($CBr_2 F_2$) as an extinguishing agent. This agent is a non-volatile, colorless, heavy liquid, with a sweet odor resembling chloroform. It can be harmful to humans after prolonged contact in vapor or liquid form; accordingly, it should be handled with caution.

APU Fire Handles.

Two APU fire handles, one for each APU, are located on the APU panel on the flight engineer's console (figure 1-18). Two identical handles are located on the loadmaster's left forward control panel (figure 1-122). Pulling any of the handles accomplishes the following with respect to the selected APU:

(1) Closes the wing and APU area fuel valves.

(2) Closes the APU bleed valve.

(3) Arms the fire extinguishing system.

(4) Deenergizes the APU generator.

(5) Shuts down the APU by closing the APU solenoid operated fuel shutoff valve.

(6) Closes the inlet door.

(7) Shuts off the supply of hydraulic fluid to the related ATM-driven hydraulic pump and closes the pump pressure line shutoff valve.

(8) Closes the related APU isolation valve.

(9) Closes the related ATM bleed air control valve.

APU Fire Extinguisher Bottle Select Switches.

An APU fire extinguisher BOTTLE SELECT switch is located on the APU panel on the flight engineer's console (figure 1-18) and also on the loadmaster's left forward control panel (figure 1-122). With the switch in "NORMAL," depressing a DISCHARGE button will discharge one agent bottle into the selected APU compartment. Moving the switch to "ALTERNATE" and again depressing the same DISCHARGE button will discharge the second agent bottle into the same APU compartment. The switches receive 28-volt DC power from two independent sources; the battery bus and the isolated DC bus (figure 1-64).

APU Fire Extinguishing Agent Discharge Buttons.

Two APU fire extinguishing agent DISCHARGE buttons are located on the APU panel on the flight engineer's console (figure 1-18). Two identical buttons are located on the loadmasters' left forward control panel (figure 1-122). Depressing a button when the associated emergency fire control handle is pulled out will fire a pyrotechnic squib allowing the agent to discharge into the APU compartment. The buttons receive 28-volt DC power from two independent sources: the battery bus and the isolated DC bus (figure 1-64).

Note

The APU AGENT DISCHARGE buttons are inoperable until the fire handles are pulled.

BLEED AIR SYSTEMS.

Bleed air is used for cabin pressurization, air conditioning, cargo floor heat, engine starting, low pressure pneumatic system, engine anti-icing, and air turbine motor operation. On 68304, 68307, 70167, 70168 and 70170 through 00460 not modified by T.O. 1345, bleed air is used to kneel the main landing gear. Bleed air is obtained from either of three sources: the main engines, the auxiliary power units (APU's), or an external pneumatic power source.

When an external pneumatic source is required, an A/M 32-60 unit will be used, if available. This unit delivers air at 42 PSI (120 pounds per minute) and temperatures up to 500°F. A suitable substitute may be used.

ENGINE BLEED AIR SYSTEM.

The engine bleed air system (figure 1-20) supplies bleed air through the wing bleed air manifolds from two sources within each engine. The primary source is from the compressor eighth stage and the secondary source is from the compressor 16th stage. These bleed air sources are controlled on each engine by a pressure augmenter valve, a temperature augmenter valve, a pylon shutoff valve and the associated controls on the environmental control panel.

On 90022 and up and airplanes modified by T.O. 1231, whenever the eighth stage pressure falls below 30 PSI, and the sixteenth stage pressure is less than 60 PSI, the pressure augmenter valve, located downstream of the sixteenth stage compressor discharge bleed manifold, opens and automatically regulates downstream pressure to 30 PSI. The pressure augmenter valve closes when downstream pressure exceeds 30 PSI, sixteenth stage pressure exceeds 60 PSI, downstream pressure exceeds upstream pressure, when the AUG AIR switch is off, or when electrical power to the valve is interrupted.

On 68307, 70167, 70168 and 70170 through 90021 not modified by T.O. 1231, whenever the eighth stage pressure falls below 30 PSI, and the sixteenth stage temperature is less than 600°F, the pressure augmenter valve, located downstream of the sixteenth stage compressor discharge bleed manifold, opens and automatically regulates downstream pressure to 30 PSI. The pressure augmenter valve closes when downstream pressure exceeds 30 FSI, sixteenth stage temperature exceeds 600°F, downstream pressure exceeds upstream pressure, when the AUG AIR switch is off, or when electrical power to the valve is interrupted.

The temperature augmenter valve is used to maintain an air supply temperature of 550°F for engine nacelle anti-icing and is armed when the engine anti-icing system is turned on.

The fuselage ducting leading to the cargo compartment floor heat temperature control valves and the ATM isolation valve contains an ATM priority valve. Anytime ATM or LPPS operation is initiated, with either of the APU's operating, the ATM priority valve is armed, except during engine start. Should any system be operating from bleed air supplied by the wing bleed air manifold, the priority valve will modulate to assure adequate bleed air flow to the ATM's and/or the LPPS.

Bleed Air System Ducting.

The bleed air system ducting installed in the airplane is divided into three sections.

The nacelle and pylon duct section consists of ducting and components from the engine bleed ports up to and including the pylon shut-off valves.

The cross-wing manifold duct section consists of ducting from the pylon shutoff valves, the ducting in the wing leading edge and the fuselage crossover ducting, up to the air conditioning unit flow control valves, and the cooling air fan shut-off valves.

The fuselage manifold duct section consists of the ducting and components from the APU compressor discharge to the wing isolation valves, with branches in the lower fuselage to the underfloor heating, LPPS, to the air turbine motors and on 68304, 68307, 70167, 70168, and 70170 through 00460 not modified by 1345, the landing gear kneeling system.

ENGINE BLEED AIR SYSTEM CONTROLS.

Bleed Air Shutoff Switches.

Four, two-position BLEED AIR switches (figure 1-21) control the pylon bleed air shutoff valves for their associated engines. If bleed air is available, the "ON" position energizes the open solenoid of the valve allowing the valve to open. The "OFF" position closes the valves. In the event a pressure augmenter valve fails, and the duct wall temperature downstream of the pylon valve exceeds 650°F, a thermal switch closes the valve. Or, if the pressure at the pylon valve exceeds 100 PSI, the valve also closes.

Note

Pylon bleed air shut-off valves may automatically close when the engine anti-ice subsystem is in operation due to an overheat condition caused by a failure of the temperature augmenter valve sensor. Reset of a closed pylon bleed air valve may not be possible until the corresponding engine throttle is retarded.

A latching feature is incorporated in the solenoid which keeps the solenoid in the last energized position. This feature eliminates the requirement of continually powering the solenoid after the valve is in the open position. Power is applied to the valve at all times in the closed position providing there is no power failure. The switches route 28-volt isolated DC bus power to the valves (figure 1-64).

Pressure Augmenter Valve Bleed Air Switches.

Four, two-position AUG AIR switches (figure 1-21) arm the bleed air augmenter valves. The switches are placed to "NORM" to arm the valves. On 90022 and up and airplanes modified by T.O. 1231, when armed, the valves modulate, as required, to regulate downstream pressure to 30 (±2) PSI whenever 8th stage bleed air pressure falls below the regulating set point and the 16th stage bleed air pressure is less than 60 PSI.

On 68307, 60167, 60168, 70170 through 90021 not modified by T.O. 1231, when armed, the valves modulate as required, to regulate downstream pressure to 30 (±2) PSI whenever 8th stage bleed air pressure falls below the regulating set point and the 16th stage bleed air temperature is less than 600°F. In the "OFF" position, the valves close if in an open and modulating position. PRESS OPEN lights on the environmental control panel come on whenever the valves open three degrees or more. The switches route 28-volt main DC bus No. 1 power to the valves on engines No. 1 and 4, and 28-volt main DC bus No. 2 power to the valves on engines No. 2 and 3 (figures 1-67 and 1-68).

Wing Isolation Valve Switches.

Two, two-position L ISO and R ISO switches (figure 1-21) control the wing isolation valves. The "OPEN" position opens the respective valve and allows bleed air flow between that wing and the center duct manifold. The switches are normally left in the "OPEN" position. The "CLOSE" position closes the valve and isolates the respective wing duct manifold from the center duct manifold.

Note

Each wing isolation valve has a manual override feature that permits repositioning the valves in the event of failure of the control circuitry or valve motors. In the case of a hot fault, the wiring must be disconnected to operate the valve manually.

The switches route 115-volt isolated AC bus power to the valves (figure 1-64).

ENGINE BLEED AIR SYSTEM INDICATORS.

Temperature Augmenter Valve Lights.

A temperature augmenter valve TEMP OPEN light (figure 1-21) for each engine comes on whenever the associated valve opens three degrees or more. The No. 1 and 4 lights receive 28-volt main DC bus No. 1 power. The No. 2 and 3 lights receive 28-volt main DC bus No. 2 power (figures 1-67 and 1-68).

Pressure Augmenter Valve Lights.

A pressure augmenter valve PRESS OPEN light (figure 1-21) for each engine comes on whenever the valve is open three degrees or more. The No. 1 and No. 4 lights receive 28-volt main DC bus No. 1 power. The No. 2 and No. 3 lights receive 28-volt main DC bus No. 2 power (figures 1-67 and 1-68).

Failure of a pressure augmenter valve in the closed position will be indicated by one of the pressure augmenter valve PRESS. OPEN lights being off while the other three lights are on. Under this condition, pressurization and air conditioning are maintained by the 16th stage bleed air of the other engines.

Failure of a pressure augmenter valve in the open position will be indicated by one of the pressure augmenter valve PRESS. OPEN lights being on while the other three lights are off and the bleed air manifold pressure indicates more than 32 PSI. If a pressure augmenter valve is failed open, the pylon shutoff valve will automatically close if the 16th stage bleed air exceeds 650°F or if duct pressure downstream of the failed augmenter valve exceeds 100 PSI. If a pressure augmenter valve fails open, the applicable AUG AIR valve bleed air switch is placed to "OFF". Under most conditions, this action will close the pressure augmenter valve and re-open the pylon shutoff valve restoring 8th stage bleed air.

If a pressure augmenter valve fails open and the pylon shutoff valve does not close, higher fuel flow and TIT can be expected if the correct EPR is maintained. Under this condition, the AUG AIR switch is placed to "OFF."

If the augmenter valve does not close, the appropriate BLEED AIR switch is placed to "OFF" to restore normal engine performance.

If a PRESS. OPEN light is on when the manifold pressure indicates more than 32 PSI and there is no indicated loss of engine power, no action is required by the flight crew.

Bleed Air Shutoff Valve Lights.

A bleed air shutoff valve CLOSED light (figure 1-21) for each engine comes on whenever the associated pylon bleed air valve closes. The No. 1 and No. 4 lights receive 28-volt main DC bus No. 1 power. The No. 2 and No. 3 lights receive 28-volt main DC bus No. 2 power (figures 1-67 and 1-68).

Wing Isolation Valve Lights.

A left and right wing Isolation Valve CLOSED light (figure 1-21) comes on whenever the respective valve is closed. The left wing isolation valve CLOSED light receives 28-volt main DC bus No. 1 power through the BLEED AIR OUTBD IND LT circuit breaker. The right wing isolation valve CLOSED light receives 28-volt main DC bus No. 2 power through the BLEED AIR INBD IND LT circuit breaker (figures 1-67 and 1-68).

Manifold Bleed Air Pressure Indicator.

A dual MANIFOLD PRESS. indicator (figure 1-21), calibrated from 0 to 120 PSI, displays left and right wing manifold bleed air pressure received from a pressure transmitter located on each wing bleed air manifold outboard of the wing isolation valves. Transmitter and indicator circuits receive 26-volt instrument AC bus No. 1 power (figure 1-66).

APU BLEED AIR SYSTEM.

Each APU supplies bleed air through separate APU bleed air control valves to the airplane center bleed air ducting system (figure 1-20). APU bleed air check valves, located downstream of the APU control valves, prevent engine bleed air from entering the APU's when the APU's are not running.

APU Bleed Valve Switches.

Two two-position APU BLEED VALVE switches are located on the APU panel (figure 1-18). Power for operation of each bleed valve solenoid is from the respective APU permanent magnet generator. The BLEED VALVE switch provides a ground for this power. Placing the switch to "OPEN" opens the respective bleed valve.

ATM Priority Valve.

The ATM priority valve is armed by the actuation of either ATM switch or the low pressure pneumatic system compressor control switch. With at least one APU operating, and its load control valve open, the priority valve will maintain sufficient downstream pressure for proper ATM operation. Depressing any of the engine STARTER buttons will deenergize the valve to full open allowing sufficient bleed air for engine starting. With engine bleed air pressurizing the manifold, and neither APU operating, the priority valve is deergized to full open, allowing engine bleed air to operate the ATM's when the ATM switch is actuated.

BLEED AIR DUCT OVERHEAT DETECTION SYSTEM.

The bleed air duct overheat detection system consists of three separate and independent loops (left, right and center). The left loop monitors the left wing and pylons bleed air ducting, the left heat exchanger cooling fan bleed air ducting, the left air conditioning compartment (boiler room) bleed air ducting, primary heat exchanger ducting, refrigeration unit, the ducting up to the secondary heat exchanger, and the ducting up to the upper deck temperature control valves. The right loop monitors identical components on the right side of the airplane except the ducting that goes to the upper deck temperature control valves. The center loop monitors the ducting between the wing isolation valves to the cargo floor temperature control valves, the APU control valves, and the ATM (air turbine motor) control valves. Each loop contains sensing elements at duct joints and valves, the associated control boxes, overheat warning lights and test/reset switches.

Note

Depressing any engine start button during an overheat condition overrides the overheat closing signal of the respective bleed air and isolation valves. The overheat lights will come on during the overheat condition.

The bleed air duct overheat detection system is energized any time power is applied to the 115-volt isolated AC bus. In the event of a left or right duct leak, the sensing element exposed to the hot air will activate the control box which in turn causes the warning lights to come on and energize control relay that closes the appropriate bleed air shutoff valves and isolation valve to isolate the duct leak. A center duct leak causes the warning light to come on and causes both isolation valves, both APU bleed valves, both APU isolation valves and both floor heat temperature control valves to close. Location of the duct leak is determined by MADAR when it receives an overheat signal.

BLEED AIR DUCT OVERHEAT DETECTION SYSTEM CONTROLS AND INDICATORS.

Bleed Air Duct Overheat System Test Switches.

Three three-position LEFT, CENTER, and RIGHT spring-loaded toggle-type OVHT TEST switches (figure 1-21) test the associated bleed air ducting sensor element continuity, control box operation and warning light circuitry. Momentarily placing the switches to "TEST" closes the associated bleed air shutoff valves and wing isolation valves, causes the DUCT OVHT light on the flight engineer's console, the BLEED DUCT HOT light on the pilots' annunciator panel to come on, and tests the continuity of the overheat sensing system. After testing, the switches are held momentarily in the "RESET" position to deenergize the overheat relay in the control box and to return the associated bleed air shutoff valves and wing isolation valves to their previously selected positions. The switches route 28-volt isolated DC bus power to the respective valves and lights (figure 1-64).

Bleed Air Duct Overheat System Indicator Lights.

Three (LEFT, CENTER, RIGHT) DUCT OVHT lights (figure 1-21) come on whenever the applicable duct overheat sensor element senses an overheat condition or when the associated OVHT TEST switch is placed to the "TEST" position. Illumination of the left DUCT OVHT light indicates an overheat condition somewhere in the left wing bleed air ducting, left pylons or air conditioning compartment. Illumination of the center DUCT OVHT light indicates an overheat condition of the ducting between the wing isolation valves down to the floor heat system and the APU bleed air ducting. Illumination of the right DUCT OVHT light indicates an overheat condition somewhere in the right wing bleed air ducting, right pylons or air conditioning compartment.

When an overheat condition is sensed, a sensor sends a signal to the appropriate control box, which in turn sends a "close" signal to the appropriate bleed air and isolation valves, and causes the appropriate overheat light and BLEED DUCT HOT light on the annunciator panel to come on. When any engine start button is depressed, it automatically overrides the valve closing signal but does not prevent illumination of the overheat lights should an overheat condition occur.

The three bleed air duct overheat lights receive 28-volt isolated DC bus power (figure 1-64).

AIR CONDITIONING SYSTEM.

The airplane has two identical air conditioning systems that can be operated individually or in parallel to supply conditioned air to the entire pressurized area (figures 1-22 and 1-23).

The air conditioning equipment, except for the heat exchangers and ram air ducts, is located in a compartment on the upper deck forward of the front wing beam. The equipment for each system consists of flow control valves, primary and secondary heat exchangers, a bootstrap air cycle refrigeration unit, water separator, ducting for distributing conditioned air, temperature regulating control and shutoff valves, temperature sensors and the associated controls and indicators for operating and monitoring the systems. The left system includes additional auxiliary ventilation ducting to provide ventilation in the event the air conditioning systems fail or must be shut down. The heat exchangers and auxiliary ventilation ducts are located in the leading edge and wing-to-fuselage fairing.

Bleed air for the air conditioning systems is ducted from each side of the cross-ship bleed air manifold outboard of the wing isolation valves, through individual flow control and shutoff valves.

AUXILIARY VENTILATION.

The ventilation inlet is located in the left ram air duct downstream of the cooling fan and check valves. Air from this scoop provides ventilation of the airplane, when on the ground, and when it is unpressurized in flight. The "AUX VENT" position of the AIR COND switch (figure 1-21) opens the auxiliary ventilation valve (figure 1-23) and allows ambient air to enter the air distribution ducting downstream of the water separator. Selection of auxiliary ventilation shuts off the flow of bleed air to the air conditioning units. A check valve is installed in the ventilating duct to prevent loss of cabin pressure in the event the ventilation valve is opened during pressurized flight. When the "AUX VENT" position is selected on the ground, the left heat exchanger cooling air fan operates to force ventilate the airplane when bleed air is available to drive the fan.

AIR FLOW SOURCES.

Both air conditioning systems use engine bleed air or APU bleed air from the cross-wing bleed air manifolds. On the ground, the air conditioning systems use APU bleed air, engine bleed air, or an external air source. All bleed air is supplied through the same cross-wing bleed air manifold.

AIR CONDITIONING UNITS.

The left and right air conditioning units are identical. Bleed air from the cross-wing manifold enters each air conditioning unit at the primary heat exchanger. Each air conditioning unit consists of a primary and secondary heat exchanger air cycle refrigerator and a water separator. A turbine-driven fan, using bleed air as the driving force, is used to induce cooling air across the heat exchangers when ram air flow is insufficient (below 0.3 Mach, when the wing slats are extended, or when the airplane is on the ground) (figure 1-23). A primary heat exchanger temperature control modulates both the turbine-driven fan and the cooling air exit door to maintain a nominal 160°F temperature downstream of the primary heat exchanger. A high limit thermostat downstream of the primary heat exchanger drives the cooling air exit door and cooling fan control valve full open when the preset high limit temperature is reached and latches the control circuit in the open position until the respective air conditioning unit is turned off and back on. There are no system indications of this condition.

Outlet air from the primary heat exchanger enters the turbine-compressor unit. The compressor discharge ducting contains a thermal overheat switch set to 560°F. This switch sends a closing signal to the flow control and shutoff valve and a signal to the appropriate (LEFT or RIGHT) AIR COND OVHT light on the environmental control panel. (See figure 1-21.) The thermal switch resets when compressor discharge air temperature at the temperature sensor drops to below approximately 525°F, and the flow control and shutoff valve reopens. A cycling AIR COND OVHT light indicates a malfunctioning cooling system. If the condition continues, the air conditioning system should be turned off.

Air from the compressor is ducted through the secondary heat exchanger where ram air further cools the bleed air and then enters the expansion turbine. Air leaving the turbine is at the coolest temperature as it enters the water separator. The water separator removes excess moisture from the refrigerated air to reduce fogging in the cabin when air conditioning is used.

A branch off the compressor inlet ducting bypasses the compressor and turbine and enters the duct between the turbine and the water separator. A low limit temperature sensor, downstream of the water separator, provides an input to the low limit temperature control which, in turn, modulates the turbine bypass valve in the turbine-compressor bypass duct. Modulation of the valve maintains temperature at the water separator to at least 35° F to prevent icing in the water separator.

GROUND OR LOW AIRSPEED OPERATION.

During ground operation, inflight below Mach 0.3, or when the slats are extended, the heat exchanger temperatures are maintained by rescheduling the flow control valves to low flow, and modulating both the turbine cooling fan and the cooling air exit valves. The higher schedule is made available at airplane speeds above Mach 0.3. The two schedules are controlled by a Mach number signal from the CADC. Low flow can also be selected manually with the FLOW CONTROL switches (figure 1-21) located on the flight engineer's panel.

The turbine fan control valve and the cooling air exit valve modulating signals are integrated in the cooling air temperature control box and work together to provide optimum heat exchanger temperature control.

The left cooling fan control and cooling air exit valve receive power from the emergency DC bus and power from the emergency AC bus, respectively (figure 1-56). The right cooling fan control and cooling air exit valve receives power from the main DC bus No. 2, and power from the aft main AC bus No. 4, respectively (figures 1-67 and 1-70).

CABIN AIR DISTRIBUTION.

Cooled air leaves the left air conditioning unit and enters the air distribution ducting. It is distributed to outlets and gaspers in the flight station, relief crew area and the troop compartment. Some of this air is diverted to the cargo compartment through the five-position diverter valve. Hot bleed air comes from the left wing bleed air manifold, downstream of the flow control valve, through three temperature control valves and enters the refrigerated air ducting at three places. Cooled air leaves the right air conditioning unit and enters the mix chamber through the alternate air valve. Ducts from the mix chamber are routed to the cargo compartment. To minimize air stratification in the cargo compartment, air from the ceiling area is ducted by the recirculation fan into the mix chamber for recirculation through the distribution ducting. Hot bleed air comes directly from the right wing bleed air manifold downstream of the flow control valve through the cargo compartment temperature control valve and enters the refrigerated air duct just upstream of the alternate air valve (figure 1-23).

CABIN AIR TEMPERATURE REGULATION.

Cabin air temperature is controlled by mixing hot bleed air with cool, low-moisture air from the refrigerator units.

Automatic or manual temperature commands from the environmental control panel (figure 1-21) together with inputs from compartment sensors, duct anticipators and high limit sensors are balanced by temperature controls to modulate the position of the cabin temperature control valves. The automatic temperature control range is between 40° F and 95° F. The duct anticipators and high limit sensors are installed in the distribution ducts leading to the affected compartments.

The position of a temperature control valve establishes the mixing ratio of heated air to refrigerated air so that the applicable cabin compartment is provided with conditioned air at the temperature required by the setting of temperature controls on the environmental control panel. The high limit sensor is preset to limit the ducting temperature to 310° F. The anticipator sensor acts to control the rate of duct air temperature change.

Manual temperature commands from the environmental control panel (figure 1-21) override the automatic inputs to the temperature control. When the manual mode of operation is selected, controls on the environmental control panel allow direct positioning of the temperature control valves. An over-heat sensor in the distribution ducting overrides manual control when distribution ducting temperature of approximately 330° F is sensed by the overheat sensor. Once a mixing ratio of heated air to refrigerated air is manually established, the mixing ratio is maintained until manually changed again or until controls are returned to the automatic mode.

Integrated Temperature Control.

To minimize interaction between the three upper deck temperature controls, a proportional control system is used. This system establishes a water separator discharge temperature and integrates the temperature control network of each compartment. The water separator discharge temperature program is limited to a range of 35°F to 100°F. The lower limit prevents icing of the water separator, while the high limit is for gasper air considerations. When either temperature selector switch, for any one of the three upper compartments, is moved out of the "AUTO" position, or the TROOP COMPT control switch is placed to the "CLOSE" position, the water separator programmed temperature reverts back to 35° F.

During integrated temperature control operation, the gasper air can become warm, if the following conditions exist:

(1) All upper deck compartment temperatures are 2°F below selected temperatures.

(2) The temperature selector switches are in the "AUTO" position. And the TROOP COMPT switch is in the "NORM" position.

(3) The AIR COND switch is placed to any position other than "OFF", "RIGHT", or "AUX VENT."

When the above conditions are satisfied, the water separator exit temperature is programmed to 100°F until the compartment temperature is within 2°F of that selected. At that point, the water separator exit temperature will modulate downward and stabilize at the temperature required to satisfy the compartment with the least heating load. The gaspers will deliver air at the programmed water separator exit temperature.

The cargo compartment temperature control operates in the same manner as the upper deck controls, except that the discriminator in the low limit control box is bypassed since only one compartment control network is involved.

CABIN AIR FLOW REGULATION.

Cabin airflow rate required for pressurization, ventilation, heating, and cooling during all conditions of flight and ground operation is regulated by the flow control valves. These valves also serve as the primary air conditioning shutoff device.

Cabin airflow rate is also controlled by a low flow cruise switch. During ground operations, in flight below Mach 0.3 or when the slats are extended, the valves are controlled by Mach number signals. The No. 1 CADC Mach signal controls the left system flow control valve, while the No. 2 CADC Mach signal controls the right system flow control valve.

The left air distribution ducting contains a five-position airflow diverter valve (figure 1-25) that is controlled by the AIRFLOW switch (figure 1-21). This valve works in conjunction with the flight station, relief crew area, and troop compartment temperature control valves to distribute air to the upper deck.

To obtain maximum airflow to the upper deck during ground operation with both APUs operating, rotate the AIRFLOW switch to the "MAX UPR DECK" position and the AIR COND switch to the "LEFT" position.

To obtain maximum airflow for the upper deck area during sustained flight at low altitude, the AIRFLOW switch is rotated to the "MAX UPR DECK" position and the AIR COND switch is rotated to the "BOTH" position.

To obtain optimum upper deck ventilation, the AIRFLOW switch is rotated to the "NORM" position and the TROOP COMPT switch is placed to the "NORM" position. When the TROOP COMPT switch is placed to "CLOSE," the air normally going to the troop compartment is diverted to the cargo compartment. This diverter valve action maintains the proper airflow distribution among the upper deck compartments as more or less air is diverted to the cargo compartment.

Rotating the AIRFLOW switch to "INTMED" diverts a larger portion of the left-hand distribution system air to the cargo compartment. This position should be used to increase cooling air to the cargo compartment during low altitude flight operations with a load of troops.

Rotating the AIRFLOW switch to "MAX CARGO" diverts all of the air from the left-hand system to the cargo compartment and should be used if ground cooling or heating of only that compartment is required. When the AIRFLOW switch is in the "MAX CARGO" position the temperature control valves for the upper compartments are driven full closed and the temperature of the left system output into the cargo compartment must be controlled by a manual HOT or COOL selection on the TROOP compartment MANUAL TEMPERATURE switch.

Air from the right-hand air conditioning system is ducted into the mixing chamber, mixed with a small quantity of air from the left-hand system and then distributed to the cargo compartment.

A three-position alternate air valve in the right-hand distribution duct routes all the air from the right air conditioning system into the mixing chamber during normal operation. The alternate air valve is automatically positioned by the air conditioning master switch to right-hand air when only the right-hand air conditioning system is operating.

In the event both air conditioning systems fail and auxiliary ventilation is selected, the alternate air valve is moved automatically to an intermediate position.

AIR CONDITIONING SYSTEM CONTROLS.

Controls for the air conditioning systems are on the environmental panel. (See figure 1-21.)

Air Conditioning System Master Switch.

The AIR COND switch is a five-position, rotary-type switch that selects the mode of air conditioning operation. See figure 1-24 for an explanation of the switch positions. The "OFF" position shuts off both the system flow control and shutoff valves. The "LEFT,"

"RIGHT," and "BOTH" positions allow the appropriate flow control and shutoff valves to open and regulate. These switch positions also route power to the associated compartment temperature controls, cooling air controls and low limit temperature controls. When the "RIGHT" position is selected, the alternate air valve is positioned to route all the right system air to the left system air distribution ducting. When the "AUX VENT" position is selected, the auxiliary air ventilation valve opens and admits auxiliary air into the upper deck distribution duct, and the alternate air valve is repositioned automatically to divert air flow into the right-hand distribution ducting and the flow control valves are closed. During ground operation, the selection of "AUX VENT" causes the left heat exchanger cooling fan to force ventilate the airplane.

CAUTION

Whenever the bleed air supply is shut off to the bleed air manifold, the AIR COND switch must be placed to the "OFF" position. If this is not done, the air conditioning unit may go into an overheat condition when the bleed air manifold is again pressurized.

Positioning of the AIR COND switch to each of its five positions supplies the following electrical power.

The "OFF" position removes all DC power to all of the air conditioning systems control relays.

The "LEFT" position routes 28-volt emergency DC bus power to the left air conditioning system control relays (figure 1-61). This position also routes 28-volt emergency DC bus power to the left compressor discharge duct overheat thermal switch and to the left system flow control valve (figure 1-61).

The "RIGHT" position routes 28-volt main DC bus No. 2 power to the right air conditioning system control relays. This position also routes 28-volt main DC bus No. 2 power to the right compressor discharge duct overheat switch and to the right system flow control valve (figure 1-67).

The "AUX VENT" position routes 115-volt emergency AC bus power to the auxiliary vent relay and the ram air vent valve. The auxiliary vent relay repositions the alternate air valve to the intermediate position (figure 1-61) and causes the left cooling air exit door to close, while in the air. On the ground, the left cooling air exit door opens and the cooling fan runs.

The left and right air conditioning systems control relays, when energized, accomplish the following:

The left system control relays routes 115-volt aft main AC bus No. 1 power to the left turbine elapsed time indicator; and to the left air conditioning system temperature control box and low limit control valve (figure 1-70). These relays also route power to the flight station, relief crew area, and troop compartment temperature and cooling controls. Power sources for these components are described elsewhere in the "Air Conditioning System" portion of this section.

The right system control relays routes 115-volt aft main AC bus No. 4 to the right turbine elapsed time indicator; and to the right air conditioning system low limit temperature control box and low limit control valve (figure 1-70). These relays also route power to the cargo compartment temperature and cooling controls. Power sources for these compartments are described elsewhere in the "Air Conditioning System" portion of this section.

Note

A left and right system control relay work together to route 115-volt emergency AC bus power to the flight station alternate air valve (figure 1-61).

Airflow Distribution Control Switch.

A rotary four-position AIRFLOW switch (figure 1-21) is used to control the airflow diverter valve and the troop compartment shutoff valve in the left distribution ducting. Refer to the "CABIN AIR FLOW REGULATION" paragraph for a functional description of the four switch positions. The AIRFLOW switch routes 115-VAC forward main AC bus No. 3 power to the diverter valve (figure 1-65).

Flight Station Temperature Control Switch.

The FLT STA temperature control switch (figure 1-21) is a four-position toggle switch that provides automatic and manual commands to the flight station temperature control valve. In "AUTO", the FLT STA switch works in conjunction with the rheostat-type temperature selector switch located below the toggle switch. The automatic temperature control balances the commands with the primary sensor, the anticipator, and high limit sensor to automatically position the temperature control valve. The high limit setting of the high limit sensor prevents excessive temperature during automatic operation.

Note

Manual actuation of the temperature control valve is very sensitive. The total travel time of the valve from the full hot to full cold position, or reverse, is 8 - 15 seconds. Short "beeping" of the switch in the "HOT" or "COOL" position, with time allowed for the compartment temperature to stabilize, will minimize temperature overshoot and avoid cycling between hot and cold compartment conditions.

In the momentary "COOL" or "HOT" positions, the FLT STA switch "AUTO" position and the temperature control sensor inputs are bypassed. In "HOT" the temperature control valve is moved toward open until an overheat sensor completes a circuit to override the manual command at a temperature of approximately 330°F. The overheat sensor circuit operates a relay to cause the temperature control valve to move back towards closed until the temperature drops below approximately 293°F. The sensor circuits then drop out and control is returned to the "HOT" position circuit. In "COOL", the temperature control valve is moved toward closed. The temperature control valve remains in any position selected when the FLT STA switch is positioned to the HOLD position except during overheat.

During rapid warmup with manual operation of the control valve, continued holding of the temperature control switch in the "HOT" position will cause a sudden rise of duct temperature that in turn causes the duct overheat sensor switch to actuate. Actuation of the overheat sensor switch causes the control valve to go from the full open position to an intermediate position and hold. This situation will increase the warmup time. Therefore, warmup should be done with the control switch in "AUTO".

The FLT STA temperature control switch is armed anytime the AIRFLOW control switch is in the "INTMED," "NORM," or "MAX UPPER DECK" positions. In addition, the AIR COND switch must be in "LEFT," or "BOTH," and the FLT STA temperature control switch must be in "AUTO" to power the automatic system.

The FLT STA temperature control switch in conjunction with the flight station AIRFLOW control switch routes power from the 115-volt forward main AC bus No. 4 to the flight station temperature control box, control relays, compartment duct overheat switch, temperature control valve, and the temperature sensor fan. Circuit protection is provided by a circuit breaker on the flight engineer's No. 3 circuit breaker panel (figure 1-65).

Relief Crew Area Temperature Control Switch.

The RELIEF CREW area temperature control switch (figure 1-21) is a four-position toggle switch that provides automatic and manual commands to the relief crew area temperature control valve. This switch functions in the same way as the FLT STA switch together with its rheostat temperature control. The RELIEF CREW temperature control switch is armed any time the AIRFLOW control switch is in the "INTMED," "NORM," or "MAX UPPER DECK" position. In addition, the AIR COND switch must be in "LEFT," or "BOTH," and the RELIEF CREW switch must be in "AUTO" to power the automatic system.

The RELIEF CREW area temperature control switch, in conjunction with the cargo compartment AIRFLOW control switch, routes power from the 115-volt forward main AC bus No. 4 to the relief crew area temperature control box, control relays, compartment duct overheat switch, compartment temperature control valve and the compartment temperature sensors (figure 1-65).

Troop Compartment Temperature Control Switch.

The TROOP compartment temperature control switch (figure 1-21) is a four-position toggle switch that provides automatic and manual commands to the troop compartment temperature control valve. This switch functions in the same way as the FLT STA switch, together with its rheostat temperature control. The TROOP compartment temperature control switch is armed anytime the TROOP COMPT switch is in the "NORM" position. The automatic system is powered anytime the AIR COND switch is in the "LEFT," or "BOTH" position and the TROOP temperature control switch is in "AUTO" and the TROOP COMPT switch is in the "NORM" position.

The TROOP COMPT switch in conjunction with the AIRFLOW control switch routes 115-volt AC power from the forward main AC bus No. 2 and No. 3 to the flight station diverter valve (figures 1-65 and 1-66).

Cargo Compartment Temperature Control Switch.

The CARGO compartment temperature control switch (figure 1-21) is a four-position toggle switch that provides automatic and manual commands to the cargo compartment temperature control valve. The switch functions in the same way as the FLT STA switch together with its rheostat temperature control. The CARGO temperature control switch is armed all the time. The automatic system is powered any time the AIR COND switch is in the "RIGHT" or "BOTH" position and the CARGO switch is in "AUTO."

The CARGO temperature control switch routes power from the 115-volt forward main AC bus No. 1 to the cargo compartment temperature control box, control relays, compartment duct overheat switch temperature control valve, and the compartment temperature sensor fan (figure 1-66).

Compartment Automatic Temperature Control Rheostats.

The FLT STA, RELIEF CREW, TROOP and CARGO compartment automatic temperature control rheostats (figure 1-21) work in conjunction with the "AUTO" position of the four temperature control toggle switches. These rheostats are identical and maintain a steady state temperature between 40°F and 95°F in their respective compartments.

Troop Compartment Air Conditioning Shutoff Switch.

The TROOP COMPT switch (figure 1-21) is a two-position toggle switch that shuts off all conditioned air to the troop compartment. In the "NORM" position, the troop compartment air conditioning shutoff valve is open allowing conditioned air to enter the compartment as selected by the airflow selector switch. In the "CLOSE" position, the valve is closed and all conditioned air stops flowing into the compartment. The switch overrides the temperature control boxes and closes the control valve. The TROOP COMPT switch routes 115-volt AC power from the forward main AC bus No. 1 (figure 1-66).

Cargo Compartment Air Conditioning Recirculating Fan Switch.

The RECIRC FAN switch (figure 1-21) is a two-position toggle switch that controls the recirculating fan that injects air from the top of the cargo compartment into the mixing chamber where it is mixed with fresh air and redistributed.

The cargo compartment RECIRC FAN switch routes power from the 115-volt forward main AC bus No. 3 to the cargo compartment recirculating fan control relay (figure 1-65). When energized, this relay routes power from the 115-volt monitor AC bus No. 3 to the cargo compartment recirculating fan (figure 1-70).

Flow Control Switches.

Two FLOW CONTROL switches (figure 1-21) are used to control the flow control and shutoff valves. Placing the switches to "NORM" with the slats retracted and the airplane airborne (touchdown relay in the air position), puts the flow control valve in the high flow schedule if above 0.3 Mach. If the airplane goes below 0.3 Mach the flow control valve goes into the low flow schedule. Placing the switch to "LOW" manually puts the flow control valve in the low flow schedule regardless of airplane configuration or Mach number. The left FLOW CONTROL switch controls 28-volt DC power from the emergency DC bus (figure 1-61). The right FLOW CONTROL switch controls 28-volt DC power from the main DC bus No. 2 (figure 1-67).

AIR CONDITIONING SYSTEM INDICATORS.

Indicators and lights for the air conditioning systems are on the environmental panel (figure 1-21).

Air Conditioning Overheat Lights.

Two (LEFT, RIGHT) AIR COND OVHT lights come on whenever their respective compressor discharge duct overheat switches detect an overheat condition. The left light receives 28-volt emergency DC bus power (figure 1-61). The right light receives 28-volt main DC bus No. 2 power (figure 1-67).

Compartment Temperature Indicators.

Three (RELIEF CREW TROOP, CARGO) temperature indicators (figure 1-21) are calibrated from -20 to +120°F, and monitor the temperature of their respective compartments. The relief crew area and troop compartment temperature indicators receive 28-volt main DC bus No. 2 power (figure 1-67). The cargo compartment temperature indicator receives 28-volt main DC bus No. 1 power (figure 1-68).

AIR CONDITIONING SYSTEM NORMAL OPERATION.

During normal operation, the left air conditioning system conditions air for the upper deck area, with some air ducted to the mix chamber. The right system conditions air for the cargo compartment. If one system fails, the other system can provide and maintain proportionate airflow to all compartments. To put the systems into operation, accomplish the following:

1. Emergency Depress Switches - "NORM"
2. Wing and APU ISO switches - "OPEN"
3. Engine or APU BLEED AIR switches - "ON"
4. AIRFLOW Switch - "NORM"
5. TROOP COMPT Switch - "NORM"
6. AIR COND Switch - "BOTH"
7. Compartment Temperature Control Switches - "AUTO"

Select the desired temperature with the automatic temperature control rheostats.

8. RECIRC FAN Switch - "ON"
9. FLOW CONTROL Switches - "NORM"

Check that the bleed air augmenter valve switches are in the "NORMAL" position, to prevent unstable operation of the air conditioning system on the ground.

Note

Do not operate the air conditioning system with external air that is less than 250°F. The air temperature must be this temperature or above to assure that the heat exchanger cooling system functions properly. Annoying or excessive fog coming from the air conditioning outlets during rapid cool-down in conditions of high humidity can be alleviated by adding incremental amounts of heat to the system until the fog ceases or approaches a tolerable level.

After the engines are started and both APUs are operating, optimum upper deck cooling can be obtained by placing the AIR COND switch to "BOTH" and closing the right wing isolation valve.

Note

Always place the AIR COND switch to the "OFF" position when air conditioning is no longer desired. Do not attempt to turn on or turn off the air conditioning system with the bleed air switches. Such operation may cause an overheat condition due to cooling air system response characteristics.

CARGO COMPARTMENT FLOOR HEAT SYSTEM.

The cargo compartment floor heat system forms a part of the environmental system (figure 1-23). The cargo compartment floor heat system consists of bleed air ducting from the center bleed air duct, two floor heat temperature control valves, three bleed air injectors that inject bleed air into the floor heat recirculating fan ducts downstream of the fan, and three floor heat recirculating fans. Two under floor primary temperature sensors and two anticipator and high limit duct sensors in the ducting downstream of the bleed air injectors provide inputs to two cargo compartment floor heat temperature control boxes to control the position of the floor heat modulating valves to maintain a floor exit temperature of about 75°F. Overheat signals will close the respective temperature control valve if an overheat condition is sensed. The overheat switches route 28-volt isolated DC bus power to the cargo compartment floor duct overheat relays (figure 1-64). The energized relays send closing signals to the floor heat temperature control valves, wing isolation valves and the APU load control and shutoff valves. This action shuts off all bleed air flow to the center bleed air duct.

Note

If bleed air is supplied to the floor heat system by an external pneumatic air source, the overheat switches do not turn off the bleed air supply to the center bleed air duct. If the overheat is due to a defective floor heat valve, it will not be corrected.

CARGO COMPARTMENT FLOOR HEAT SYSTEM CONTROLS.

Floor Heat Switch.

The three-position FLOOR HEAT switch (figure 1-21) controls the flow of hot bleed air to the bleed air injectors. Placing the switch to "ON" arms the temperature control boxes, and turns on the recirculation fans. Placing the switch to "FANS ONLY" starts the three floor heat recirculating fans and conditioned cargo compartment air is recirculated under the floor. No hot bleed air is injected under the floor when the "FANS ONLY" position is selected. Placing the switch to the "OFF" position removes power from the control boxes, all three fans and the temperature control valves close. The switch routes 115-volt isolated AC bus power to the floor heat temperature control boxes, floor heat temperature control valves, and to the fan control relays. When the fan control relays are energized 115-volt monitor AC bus No. 2 power is routed to the forward and center fans and 115-volt monitor AC bus No. 3 power is routed to the aft fan (figures 1-64 and 1-70).

PRESSURIZATION SYSTEM.

The pressurization system forms a part of the environmental control systems. (figure 1-23.) The system is designed to regulate the outflow of cabin air to atmosphere, thereby providing a pre-selected cabin altitude and rate of pressure change. In addition, emergency depressurization capability is provided.

The pressurized area consists of the upper deck area and the cargo compartment area between the forward and aft pressure doors.

The system contains automatic and manual controls, an emergency depressurization control, a dual motor outflow valve, two over-pressure safety valves, two negative pressure relief valves, and system indicators.

Both the automatic and manual pressure control systems are completely electrical, using pneumatic sensors in the automatic system. The safety valves are pneumatically controlled. The negative pressure relief valves are two mechanical flapper valves.

Both of the air conditioning systems, or one system plus the floor heat system, must be in operation to fully pressurize the airplane. This requirement is necessary because of the large surface area and allowable leakage rate. Cabin leakage rate is based

on the criteria of maintaining an 8,000-foot cabin altitude at 40,000 feet at cruise power with one air conditioning unit inoperative and for maintaining cabin pressure during descent at idle power. Pressure is maintained by providing an inflow through the flow control valves and modulating the outflow through the outflow valve.

The selected cabin altitude is maintained in accordance with a prescribed schedule (figure 1-26) by controlling the outflow valve (figure 1-27). The control normally maintains a constant cabin altitude, but it also limits the differential pressure if too low an altitude is selected. The outflow valve is electrically powered for all modes of operation by one of the two actuators through a differential drive mechanism. The outflow valve consists of two separate units, a thrust-recovery valve and a butterfly valve, mechanically linked. The thrust-recovery valve controls the overboard flow of cabin air during all normal flight conditions while the butterfly valve is closed. The butterfly valve is opened with the thrust recovery valve during ground operations, unpressurized flight and during emergency depressurization. The emergency depressurization mode is designed so that the airplane will depressurize from an initial cabin altitude of approximately 4,000 feet equalizing with an airplane altitude of 30,000 feet (8.3 PSI differential pressure) in approximately 60 seconds. A cabin altitude limit control pressure switch closes when the cabin altitude reaches or exceeds 11,500 (+500) feet. This action produces logic signals which override the automatic controls in "FLIGHT" or "LANDING" mode, driving the outflow valve toward closed to limit the cabin altitude. The "MANUAL," "RATE DEPRESS" and "EMERGENCY DEPRESS" modes will bypass the altitude limit control when forcing the cabin above the altitude limit. When returning to the "FLIGHT" or "LANDING" mode, the cabin altitude is automatically rated down to the selector at the selected rate.

Two safety valves, operating on differential air pressure, crack open at a cabin pressure differential of 8.4 PSI. These safety valves limit the cabin pressure differential to 8.7 PSI if the cabin pressure control system malfunctions, or if this pressure is reached with the manual controller. These valves are located in the cargo compartment on either side of the aft pressure door and an atmospheric pressure sensing line is routed to the aft fuselage.

Two negative pressure relief flapper valves, installed in the upper sections of the aft pressure bulkhead, open if ambient pressure is equal to or greater than cabin pressure.

PRESSURIZATION SYSTEM CONTROLS.

The pressurization system controls consist of a manual cabin pressure controller, a mode selector, cabin altitude selector knobs, and an emergency depressurization switch.

Manual Cabin Pressure Controller.

The MANUAL CABIN PRESS controller (figure 1-27) is a variable rheostat-type, rotary control that decreases ("DCR") cabin pressure when rotated in the counterclockwise direction, increases ("INCR") cabin pressure when rotated in the clockwise direction and is spring-loaded to the null or center position. Before manual control can be accomplished, the pressurization MODE selector switch must be rotated to the "MANUAL" position. Rotation of the MANUAL CABIN PRESS controller controls the manual motor of the outflow valve causing the valve to reposition at a rate directly proportional to the angular displacement of the control knob. This mode overrides the automatic altitude limit control and the automatic differential pressure limit control. However, if either limit is exceeded, a return to automatic control will not cause an undesirable pressure surge. The cabin will return to the previously selected altitude at the selected rate.

The MANUAL CABIN PRESS controller routes 115-volt emergency AC bus power to the outflow valve manual actuator (figure 1-61).

Cabin Altitude Selector Knobs.

Four cabin altitude selector knobs and four tape displays are located on a sub-panel (figure 1-27) on the environmental panel. The selector knobs send signals to the automatic pressurization control box, which automatically commands the position of the outflow valve. The automatic control provides a cabin altitude limit of 11,500 (±500) feet and a differential pressure limit of 8.2 ±0.1 PSI. The function of each tape display control is described as follows:

FLIGHT TAPE. The FLIGHT tape is rotated to select a desired cabin/airplane altitude. When the MODE selector switch is positioned to "FLIGHT", this permits the cabin altitude controller to command the outflow valve through the control box. Cabin altitude selections, on the flight tape, range from 1,500 feet below sea level to 15,000 feet above sea level in increments of 100 feet. Airplane altitudes shown adjacent to the cabin altitudes will result in the allowable differential pressure. Selection can be made by airplane altitude or cabin altitude as long as differential pressure limit or cabin altitude limit is not exceeded.

RATE TAPE. The RATE tape is rotated to select a desired cabin rate of climb or descent in the "FLIGHT," "LANDING," or "RATE DEPRESS" modes. Rate control is accomplished when in the "RATE DEPRESS" mode. During this type of operation, the cabin altitude climbs from any selected cabin altitude to the airplane flight altitude at the selected rate. Changes in the rate may be made at any time during a flight. Rate selections range from 100 to 2,000 feet per minute in increments of 50 feet.

Note

When depressurizing the cabin to altitudes above 10,000 feet in the Rate Depress mode, the cabin rate of change will gradually decrease from the selected rate as the cabin altitude increases above 10,000 feet.

LANDING TAPE. The LANDING tape is rotated to select a desired landing field elevation. This field elevation may be set in any time during flight unless the landing field elevation is higher than the desired flight altitude. In this case, the cabin altitude will ascend to the highest selected altitude. When the descent is started, the "LANDING" mode is selected. This causes the cabin to initiate the descent to the landing field elevation at the selected rate. The rate may be adjusted during descent as desired. Landing field elevation selections range from 1,500 feet below sea level to 15,000 feet above sea level in increments of 20 feet. The LANDING mode is calibrated to the standard day barometric pressure of 29.92 inches of Hg. Any local change to this value must be compensated for by setting in the local barometric pressure with the BARO CORR tape.

Note

When landing at airfields above 11,000 feet, the Manual Mode must be selected to prevent the altitude limit control from being energized when the cabin altitude reaches 11,000 feet.

BARO CORRECTION TAPE. The BARO CORR tape is rotated to set in barometric corrections in conjunction with the landing mode and can be set in when desired. Corrections can be set in from 28 to 31 inches of mercury in increments of 0.02 inches of mercury. Before any barometric correction becomes effective, the MODE selector switch must be rotated to "LANDING." The automatic cabin pressure controllers send signals to the pressurization control box, which in turn controls 115-volt forward main AC bus No. 4 power to the automatic outflow valve motor actuator (figure 1-65).

Pressurization Mode Selector Switch.

The pressurization MODE selector switch (figure 1-27) provides specific operating conditions during a flight. The "RATE DEPRESS" position overrides the altitude limit control and allows the airplane cabin to depressurize at the selected rate to any airplane altitude. The mode selector should be placed in "MANUAL" After depressurization, since the airplane temporarily pressurizes again in the "RATE DEPRESS" mode if the airplane climbs at a higher rate than is selected on the automatic controller. The "FLIGHT" position activates the flight cabin altitude selection and rate selection on the automatic controller and transmits these signals to the pressurization control box for automatic control. The "LANDING" position activates the landing altitude selection, rate selection and the barometric correction selection on the automatic controller and transmits these signals to the control box for automatic control. On the ground, the "LANDING" position sends a signal through the landing gear safety switches, to the outflow valve causing it to go to the full open position. The "MANUAL" position de-energizes all the functions of the automatic cabin pressure control system and energizes the MANUAL CABIN PRESS. system. The manual motor actuator is then used to drive the outflow valve. The safety valves will function independently as with the automatic system.

The "RATE DEPRESS", "FLIGHT", and "LANDING" positions of the MODE selector switch route 115-volt forward main AC bus No. 4 power to the pressurization control box, which in turn sends automatically controlled signals to the outflow valve automatic motor actuator. The "MANUAL" position of the MODE selector switch routes 115-volt emergency AC bus power to the manual control and then to the outflow valve manual motor actuator (figure 1-61).

Emergency Depressurization Switch.

The emergency depressurization switch (figure 1-27) is a guarded, toggle switch that permits electrical depressurization of the airplane. During normal pressurized flight the switch is in the NORMAL (down) position. When placed to "EMERG DEPRESS", the switch provides an electrical signal that bypasses the manual and automatic cabin pressure controllers to cause the outflow valves to open fully. The "EMERG DEPRESS" position of this switch also completes electrical circuits that close the left and right air conditioning flow control and shutoff valves, and the two cargo compartment floor heat temperature control valves. Use of the emergency depressurization switch results in an initial cabin altitude of approximately 4,000 feet equalizing with an airplane altitude of 30,000 feet (8.3 PSI differential pressure) in approximately 60 seconds.

The "EMERG DEPRESS" position routes 28-volt emergency DC bus power to the emergency depressurization control relays which interchange the power sources to the outflow valve motors (figure 1-61). When energized, the relays route 115-volt forward main AC bus No. 4 power to the manual motor and 115-volt emergency AC bus power to the larger automatic motor (figures 1-61 and 1-65).

PRESSURIZATION SYSTEM INDICATORS.

The pressurization system contains a cabin altimeter and differential pressure indicator, a cabin rate of climb indicator, an outflow valve position indicator, a cabin pressure annunciator light, and FLIGHT, RATE, LANDING and BARO CORR taped display indicators on the AUTO CABIN PRESS controller panel.

Cabin Altimeter and Differential Pressure Indicator.

A combined cabin altimeter and differential pressure indicator (figure 1-21) provides comparative indications of cabin altitude and differential pressure. The short pointer indicates cabin altitude on the inner dial while the long pointer indicates the difference in PSI between cabin pressure and atmosphere on the outer dial.

Cabin Rate-of-Climb Indicator.

A cabin rate of climb indicator (figure 1-21) indicates the rate of cabin altitude change (ascent or descent). The indicator is calibrated from 0 to 6,000 feet per minute up or down.

Outflow Valve Position Indicator.

An OUTFLOW VALVE position indicator (figure 1-21) indicates the position of the outflow regulator valve from "OPEN" to "CLOSE", with intermediate position marks between the two positions. A "V" mark on the face of the indicator is the point at which the outflow butterfly valve begins to open with the thrust recovery outflow valve. The indicator is excited by rectified and stepped-down 115-volt forward main AC bus No. 4 power when the MODE selector switch is in any automatic position. It is excited by rectified and stepped down 115-volt emergency AC bus power when the MODE selector switch is in the "MANUAL" position, but is not powered during emergency depressurization. When power is off, the indicator needle will be at the valve open position (figures 1-61 and 1-65).

Cabin Pressure Low Caution Lights.

A CABIN PRESS. LOW caution light on the pilots' annunciator panel (figure 1-128) and on the flight engineer's console (figure 1-21) come on when the cabin altitude goes above 10,000 feet. The lights receive power from the 28-volt isolated DC bus (figure 1-64).

PRESSURIZATION SYSTEM NORMAL OPERATION.

Before Takeoff.

Before takeoff, accomplish the following:

1. Check that the Emergency Depressurization Switch is in the NORMAL (down) position.

2. Rotate the RATE controller to a desired cabin altitude rate-of-climb.

3. Rotate the FLIGHT controller to the planned cruise altitude or to a cabin altitude setting if maximum differential pressure is not desired.

4. Check that the LANDING controller is set lower than the cabin altitude readout on the FLIGHT controller.

5. Rotate the MODE selector switch to "FLIGHT."

After Takeoff, Climb, and Cruise.

1. Check pressurization.

2. Reselect FLIGHT or RATE as necessary to compensate for changes in the flight plan.

Descent.

1. Set the LANDING controller to the field elevation.

2. Rotate the BARO CORR controller to the landing field barometric pressure.

3. Rotate the MODE selector switch to "LANDING."

4. Rotate the RATE controller to a desired cabin rate-of-descent.

PRESSURIZATION SYSTEM MANUAL OPERATION.

The normal flight or landing pressurization mode can be overriden at any time by accomplishing the following:

1. Rotate the MODE selector switch to "MANUAL". This action transfers all the functions of the flight or landing modes to the manual mode and bypasses all other automatic functions except the safety valve.

2. Rotate the MANUAL CABIN PRESS. controller and closely monitor the cabin differential pressure and rate-of-climb indicator to maintain the desired cabin pressure.

CAUTION

Do not hold the MANUAL CABIN PRESS. controller in the "INCR" direction after the thrust recovery valve is closed or damage to the manual actuator motor may result.

PRESSURIZATION SYSTEM-PRESSURIZATION CONTROL FOR ADS OPERATION.

To depressurize the cabin prior to ADS door operation, accomplish the following:

1. Rotate the MODE selector switch to "RATE DEPRESS."

2. Rotate the RATE controller to a desired cabin rate-of-ascent.

3. Insure that the cabin differential pressure reads zero pressure and verify with the loadmaster scanner that the outflow valves are full open.

4. Rotate the MODE selector switch to "MANUAL" and drive the outflow valve full open with the MANUAL CABIN PRESS. control.

5. Place the air condition master switch to "OFF."

6. Place the floor heat switch to "OFF."

7. Notify the copilot that the cabin is depressurized and that the pressure door side seals are retracted to allow arming of the aft cargo door systems.

Note

Do not place the aft cargo door arm switch to the "ADS READY" position until the air conditioning master switch and floor heat switch have been in the "OFF" position for at least one minute.

8. Once the pressure door is up and locked, the air conditioning and underfloor heat can be restored to normal.

WINDSHIELD RAIN REMOVAL SYSTEM.

The windshield rain removal system consists of mechanical windshield wipers and a rain repellent subsystem.

WINDSHIELD WIPERS.

The components for each of the windshield wipers consist of a multi-tap transformer, a speed selector switch, a rectified 27-volt DC motor, a motion converter, and a wiper arm and blade assembly. The windshield wipers are used primarily during taxi, takeoff roll, and landing.

WINDSHIELD WIPER CONTROLS.

Windshield Wiper Speed Selector Switches.

Two PILOT and COPILOT WINDSHIELD WIPER speed selector switches (figure 1-28) turn on and control the speed of the wiper on the respective windshield. The momentary "PARK" position drives the blade and arm assembly past the normal end of the stroke and parks it farther from view.

WINDSHIELD WIPER OPERATION.

Note

Do not operate the windshield wipers on a dry windshield. The force applied to the wiper blade causes unnecessary wear of the blades when they are dragged across the windshield. Also, the wiper motors may heat up due to the drag and may cause the thermal switch to trip. The thermal switch will reset and the wipers will continue to operate, if on, or go to the park position, if selected.

To operate the windshield wipers, accomplish the following:

1. Rotate the windshield wiper switch(es) from "OFF" to any of the four speed positions.

Speed selection depends on rain removal effectiveness. Should the "HIGH" speed position be ineffective, operate the rain repellent system. Refer to the Rain paragraph in Section VII for further information on the use of windshield wipers.

To turn off the windshield wipers, accomplish the following:

1. Rotate the windshield wiper switch(es) to "PARK" and hold in this position until operation ceases.

Note

The wipers may cycle several times before reaching the park position.

If the wipers stall, it may be necessary to reduce airspeed to allow the wipers to park.

Power for the pilot's wiper comes from the 115-volt forward main AC bus No. 2 and is routed to a step-down transformer. Power for the copilot's wiper comes from the 115-volt main AC bus No. 3 and is routed to a step-down transformer. The speed selector switches route the transformer AC voltage to a rectifier unit, within the wiper motor, that converts it to 27-volts DC power (figures 1-65 and 1-66).

RAIN REPELLENT SYSTEM.

A rain repellent system is installed that sprays a pressurized rain repellent fluid on the windshield. The fluid disperses the rain to provide increased visibility, and the water is removed more easily by either the air stream or by the windshield wipers. The system consists of repellent fluid in two disposable pressurized containers, control valves, selector valves, and the associated controls and circuit breakers.

Note

Simultaneous use of windshield wipers and rain repellent is not recommended. The repellent coating will become less effective and visibility will be degraded.

RAIN REPELLENT SYSTEM CONTROLS.

Rain Repellent Container Selector Switch.

A three-position rain repellent container selector switch (figure 1-28) is on the overhead control panel. Placing the switch to "NO. 1 CAN" routes 28-volt main DC bus No. 1 power to the No. 1 rain repellent container selector valve. Placing the switch to "NO. 2 CAN" routes 28-volt main DC bus No. 2 power to the No. 2 rain repellent container selector valve. The "OFF" position removes power from both valves (figures 1-67 and 1-68).

Rain Repellent Discharge Pushbuttons.

Two rain repellent (PILOT and COPILOT RAIN REPEL PRESS-TO-DISCHARGE) pushbuttons (figure 1-28) are on the overhead console. Pressing either pushbutton, with the selector switch in either the "NO. 1 CAN" or "NO. 2 CAN" position causes the respective repellent control valve to open. The valves contain an integral timer that limits the valve open time to approximately 0.2 seconds. At the end of the timer interval, the valve closes and will not reopen until the button is pressed again.

Note

In order to assure proper servicing of the fluid container, always select the No. 1 container. When the fluid is depleted, switch to the No. 2 container and note on Form 781, after the flight that the No. 1 container is empty, that the No. 2 container be placed in the No. 1 position and a new container be placed in the No. 2 position.

The pilot's and copilot's pushbuttons route 28-volt main DC bus No. 1 and No. 2 power to their respective rain repellent control valve causing it to open and send fluid to the spray nozzles (figures 1-67 and 1-68).

Rain Repellent System Operation.

To operate the rain repellent system, accomplish the following:

1. Place the container selector switch to "NO. 1 CAN."

If the NO. 1 container is empty, select the "NO. 2 CAN."

2. Press and release the repellent discharge pushbutton.

The repellent will spray for approximately 0.2 of a second. Each rain repellent bottle contains 500 cc of fluid. This allows approximately 32 applications.

3. Repeat step 2 as necessary to assure adequate vision through the windshield.

Note

Do not use the rain repellent on a dry windshield. The residue that is left after solvent evaporation impairs vision through the windshield.

Note

A form 781 entry is required after each flight in which the rain repellent system is used.

ANTI-ICING AND DE-ICING SYSTEMS.

The airplane has anti-icing systems that prevent ice formations and de-icing systems that remove ice formation. The engine nacelles and engine anti-icing systems use engine bleed air. The windshield ice and fog protection system, ice detection systems, total temperature probes de-icing system, pitot-static tubes anti-icing, and angle-of-attack vanes de-icing systems use electrically heated elements.

ICE DETECTION SYSTEM.

The ice detection system has an electrically oscillated probe that protrudes through the fuselage skin into the airstream (figure 1-29). When icing conditions are encountered, the mass of the probe is increased due to ice buildup which provides a signal to a solid state switch for the heater control and energizes the 60-second timer that controls the ice detector ICING light and the engine and nacelle anti-icing system.

Note

The ice detector probe is electrically de-iced for 5 seconds and it automatically rearms the timer.

Ice Detection System Controls.

ICE DETECTOR SWITCH. An ICE DETECTOR switch (figure 1-28) controls the operation of the ice detection system. Placing the switch to "AUTO"

arms the ice detector system for automatic operation of the engine anti-icing system. When icing is detected, the ice detector probe is de-iced, the ICING light comes on and engine and nacelle anti-icing is initiated through the "OFF" position of the engine anti-ice switch. Anti-icing of the probe and engines continues thereafter until the icing conditions cease.

Placing the ICE DETECTOR switch to "MAN" arms the ice detection system for detection only. When icing is detected, the probe is de-iced and only an ICING light signal is generated. When the ICING light comes on, the flight engineer is warned that icing is occurring. The ENGINE ANTI-ICE switches must be placed to "ON" to initiate anti-icing. Anti-icing of the ice detector probe continues thereafter until icing conditions cease. Anti-icing of the engines continues until the ENGINE ANTI-ICE switches are placed to "OFF".

Placing the ICE DETECTOR switch to "OFF" deactivates the ice detection system. The ice detector probe is no longer de-iced.

The ICE DETECTOR switch, when in the "AUTO" or "MAN" position, routes 28-volt DC main bus No. 2 and 115 volt forward main AC bus No. 4 power to the ice detector control box (figure 1-65 and 1-67).

ICE DETECTION TEST SWITCH. An ICE DETECTOR test switch (figure 1-28), spring-loaded to the "NORM" position, tests the ice detection system. In "TEST", the switch simulates an icing condition activating circuits that would function during actual icing conditions. The switch routes 28-volt main DC bus No. 2 power to the ice detector (figure 1-67).

Ice Detection System Lights.

ICE DETECTION SYSTEM ICING LIGHT. An ICING light on the flight engineer's annunciator panel (figure 1-21) comes on whenever the ICE DETECTOR switch is in the "AUTO" or "MAN" position and icing of the ice detector probe has occurred. The light receives 28-volt main DC bus No. 2 power (figure 1-67).

ENGINE, PT_2 PROBE AND NACELLE ANTI-ICING SYSTEM.

Engine and engine ram pressure (PT_2) probe anti-icing is accomplished by ducting 16th stage bleed air through the engine anti-icing regulator and shutoff valve and into the inlet guide vanes (figure 1-20). The PT_2 anti-icing shroud protrudes from the leading edge of an engine inlet guide vane.

Nacelle lip anti-icing (figure 1-20) is accomplished by ducting eighth stage bleed air through the appropriate temperature regulator and shutoff valves to the peripheral spray bar within the leading edge of each engine nacelle. The anti-icing bleed air is exhausted back through internal passages in the inlet cowl and discharges into the inlet fan stream. If eighth stage compressor bleed air pressure and/or temperature is inadequate, bleed air from the 16th stage is ducted through the bleed air pressure and temperature augmentor valves to maintain both pressure and temperature.

Engine, PT_2 Probe and Nacelle Anti-Icing System Controls.

The engine, PT_2 probe and nacelle anti-icing may be manually or automatically controlled with the following switches:

ENGINE ANTI-ICE SYSTEM SWITCHES . Four ENGINE ANTI-ICE switches (figure 1-28) control the engine, PT_2 probe and nacelle anti-icing systems. Placing the switches to "ON", turns on the anti-icing. Placing the switches to "OFF" with the ICE DETECTOR switch in "AUTO" automatically controls the anti-icing system when ice is detected. The "RESET" position is used to deenergize the overheat control relay if it was energized by an overheat thermal switch signal.

Engine No. 1 and 4 anti-icing control relay power comes from the 28-volt main DC bus No. 1. Engine No. 2 and 3 anti-icing control relays receive power from the 28-volt main DC bus No. 2 (figure 1-67 and 1-68).

Engine, PT_2 and nacelle anti-icing control valves receive power from the 115-volt forward main AC buses 1, 2, 3 and 4 respectively (figure 1-65 and 1-66).

ICE DETECTOR SWITCH. An ICE DETECTOR switch (figure 1-28) controls the mode of operation of the engine. PT_2 probe and nacelle anti-icing systems. With the ICE DETECTOR switch in the "MAN" position, the ice detector provides only an icing signal that causes the ICING light on the flight engineer's annunciator panel to come on. Placing the ICE DETECTOR switch to "AUTO", with the ENGINE ANTI-ICE switches in the "OFF" position, initiates automatic operation of the engine, PT_2 probe and nacelle anti-icing system. When icing is detected, the ICING light comes on, the engine, PT_2 probe and nacelle anti-ice control valves open, and the ON lights on the ENGINE ANTI-ICE panel (figure 1-28) come on. Anti-icing continues as long as icing exists, and is turned off one minute after the detector ceases to sense icing conditions. (See the ICE DETECTION SYSTEM CONTROLS paragraph for ICE DETECTOR switch power sources).

ENGINE ANTI-ICING CONTROL VALVE REGULATOR TEST SWITCH. A REG FAIL switch (figure 1-28) checks the operation of the engine, PT_2 probe and nacelle anti-icing control valves and lights. With

the ENGINE ANTI-ICE switches in the "OFF" position and the REG FAIL test switch held in the momentary "TEST" position, none of the regulator failure lights should come on. If a NAC REG RAIL light comes on, the secondary regulating function of the nacelle anti-icing valve is stuck open. With the ENGINE ANTI-ICE switches in the "ON" position and all fail lights off, actuation of the REG FAIL test switch to the "TEST" position should cause all the fail lights to come on indicating that the regulator failure indicating circuit is operating properly and that the secondary pressure regulator is not failed closed. Releasing the REG FAIL switches to "OFF" returns the engine, PT_2 probe and nacelle anti-icing system to its pretest status. The test switch routes 28-volt main DC bus No. 1 power to the test solenoids (figure 1-68).

Engine, PT_2 Probe and Nacelle Anti-Icing System Lights.

ENGINE ANTI-ICE ON LIGHT. Four engine ANTI-ICE ON lights (figure 1-28) come on whenever the respective engine, PT_2 probe and nacelle anti-ice control valves open to approximately five degrees. Both valves must be open before the lights come on with the control switch placed to "ON," or the ICE DETECTOR switch is placed to "AUTO." The lights receive 28-volt main DC bus No. 1 and No. 2 power (figures 1-67 and 1-68).

ENGINE ANTI-ICE OVERHEAT LIGHT. Four engine OVERHEAT lights (figure 1-28) come on whenever the respective engine nacelle thermal switch generates an overheat signal. The OVERHEAT lights receive the same power as the ANTI-ICE ON lights described above.

ENGINE PRIMARY REGULATOR FAILURE LIGHTS. Four ENG PRI REG FAIL lights (figure 1-28) come on whenever the primary pressure regulator fails open in the respective engine anti-ice control valve. The ENG PRI REG FAIL lights receive the same power as the ANTI-ICE ON lights described above.

NACELLE REGULATOR FAILURE LIGHTS. Four NAC REG FAIL lights (figure 1-28) come on whenever the primary pressure regulator fails open in the respective nacelle anti-ice control valve. The NAC REG FAIL lights receive the same power as the ANTI-ICE ON lights described above.

ENGINE ANTI-ICE FAIL LIGHT. An engine ANTI-ICE FAIL light (figure 1-28) comes on whenever a primary pressure regulator in any one of the engine or nacelle anti-ice valves fail or the overheat light comes on. This light also comes on if any of the four ANTI-ICE ON lights come on when the engine anti-ice system is in the "OFF" mode of operation that is, when the associated anti-ice control switch is in the "OFF" position and the ice detector is not sending an icing signal to the engine anti-icing system. The ANTI-ICE FAIL light receives 28-volt main DC bus No. 1 power (figure 1-68).

PITOT HEAT SYSTEM.

The pitot heat system provides electrical anti-icing for the four pitot-static tubes and the two total temperature probes.

PITOT HEAT SYSTEM CONTROLS AND INDICATORS.

Pitot Heat Switches.

Two PILOT and COPILOT PITOT HEAT switches (figure 1-28), are located on the pilot's overhead console. Each switch has positions "ON" and "OFF". The PILOT PITOT HEAT switch controls power to the electrical heating elements in the masts and pitot heads of the upper left and lower right pitot tubes. The COPILOT PITOT HEAT switch controls power to the heating elements in the lower left and upper right pitot tubes. The COPILOT PITOT HEAT switch also controls power to the heating elements in both total temperature probes. The upper right and lower left pitot head and mast heaters receive 115-volt AC power from the forward main AC bus No. 4 (figure 1-65). The upper left and lower right pitot tube mast heaters receive 115-volt AC power from the forward main AC bus No. 1 (figure 1-66). The upper left and lower right pitot head heaters receive 115-volt AC power from the AC emergency bus (figure 1-61). The total temperature probe heating elements receive 115-volt AC power from the forward main AC buses No. 1 and No. 4 (figures 1-65 and 1-66).

Pitot Heat Fault Lights.

Four PITOT HEAT FAULT lights, two for the pilot's pitot heaters and two for the copilot's pitot heaters, are located on the pilot's overhead console (figure 1-28). The pilot's FAULT lights are marked UPPER L FAULT and LOWER R FAULT. The copilot's FAULT lights are marked LOWER L FAULT and UPPER R FAULT. A light comes on when the associated pitot heat switch is ON and the indicated pitot tube head or mast heater is not receiving power. The lights receive 28-volt DC power from the emergency DC bus (figure 1-61).

PITOT HEAT LIGHT. A PITOT HEAT light on the pilots' annunciator panel (figure 1-128) comes on whenever a heating element in any one or more of the pitot tubes fails or power to the element is lost. The light receives power from the 28-volt emergency DC bus (figure 1-61).

ANGLE-OF-ATTACK VANES DE-ICING SYSTEMS.

A separate and independent de-icing system is provided for the upper and lower angle-of-attack vanes. Operation of both systems is the same. The angle-of-attack vanes de-icing systems are controlled and monitored by the ANGLE OF ATTACK DE-ICE switches and lights on the pilot's overhead panel (figure 1-28).

Angle-of-Attack Vanes De-Icing Systems Controls.

ANGLE-OF-ATTACK DE-ICE SWITCHES. Two ANGLE-OF-ATTACK DE-ICE (UPR VANE HTR and LWR VANE HTR) switches (figure 1-28) control the de-icing of the four angle-of-attack vanes. The "ON" position of the two switches energizes the heater elements in the vanes. The upper vanes receive 115-volt avionics AC bus No. 2 power, and the lower vanes receive 115-volt avionics AC bus No. 1 power (figure 1-69).

Angle-of-Attack Vanes De-Icing Systems Lights.

ANGLE OF ATTACK (AOA) LIGHT. An AOA HEAT light on the pilots' annunciator panel (figure 1-117) comes on whenever heating element in any one or more of the vanes fails or power to the element is lost. The light receives power from the 28-volt DC bus (figure 1-61).

ANGLE OF ATTACK VANE HEATER FAULT LIGHTS. Two L FAULT and R FAULT lights (figure 1-28) come on whenever a heater element for the respective vane fails or power to the element is lost. The light circuits receive 28-volt emergency DC power (figure 1-61).

WINDSHIELD ICE AND FOG PROTECTION SYSTEM.

An electrical heating system provides ice and fog protection to all the flight station windshields. The three front windshield panels are of laminated glass and vinyl construction with a thin coating of transparent, electrically conductive material between the outer glass layer and the vinyl interlayer. This one conductive coating provides both ice and fog protection and maintains an optimum temperature for protection against bird strikes. The clear vision and side windshield panels are located out of the ice impingement and bird strike region and only require heat protection against fogging.

Windshield Ice and Fog Protection System Controls.

WINDSHIELD HEAT SWITCHES. Three WINDSHIELD HEAT (PILOT, CENTER, COPILOT) switches (figure 1-28), incorporating a locking feature in the "OFF" position, control the windshield ice and fog protection system. The windshield heating system is activated by placing the three switches to the "NORM" position. If severe icing conditions are encountered, and the "NORM" position does not provide enough heat, the switches are placed to "HIGH". This applies a higher power output to the heater elements that causes faster cycling of the heater elements at the same control temperature. The heat on the side windows does not increase with a change in switch position. Opening a clear vision window cuts power to both windows on that side.

WINDSHIELD HEAT COLD START SWITCH. A COLD START switch (figure 1-28) provides manual heat control to the three forward windshields when the temperature at the thermistor is below -40°C. The manual cycling should be five seconds on and 10 seconds off as placarded until the windshield temperature reaches -40°C. This cycling limit reduces thermal stresses by gradual application of heat. At -40°C automatic operation commences. The side windshield heat automatically starts at temperatures down to -54°C.

CAUTION

The windshield heat switches should be in the "NORM" position when using the COLD START switch.

Normal Operation of the Windshield Ice and Fog Protection System.

Placing the PILOT WINDSHIELD HEAT switch to "NORM" supplies 28-volt main DC bus No. 1 and 2 power to the pilot's windshield control boxes. Signals generated by the pilot's windshield thermistors are sent to the control boxes where they are amplified and sent to energize the pilot's windshields heat relays. The energized relays route 115-volt forward main AC bus No. 1 power (figure 1-66) through the low voltage tap on the pilot's forward windshield heat transformer to the heating element in the pilot's forward windshield. The energized relays also route 115-volt forward main AC bus No. 2 power (figure 1-66) to the pilot's side windshield heat transformer. Power from the high voltage tap of this transformer is routed directly

to the heating element in the pilot's side windshield. Power from the low voltage tap of this transformer (55-volts) is routed through a circuit breaker on the flight engineer's circuit breaker panel No. 1 (figure 1-62) to the heating element in the pilot's clear vision windshield. Placing the switch to "HIGH", accomplishes the same basic action as the "NORM" position, except that the pilot's windshield heat relays direct power through the high voltage tap of the pilot's forward windshield heat transformer to the heating element in the pilot's forward windshield. Voltage to the pilot's clear vision and side windshields does not change with switch position.

Placing the CENTER and COPILOT WINDSHIELD HEAT switches to "NORM" or "HIGH" accomplishes the same results for their respective windshields as does the PILOT WINDSHIELD HEAT switch.

Control power for the center and copilot's forward, clear vision and side windshield heat is supplied by the 28-volt main DC bus No. 1 and No. 2 (figures 1-67 and 1-68).

Heating element power for the center and copilot's forward, clear vision and side windshields is supplied by 115-volt forward main AC buses No. 2 and No. 4 (figures 1-65 and 1-66).

PNEUMATIC SYSTEMS.

Two separate pneumatic pressure supply systems are installed on the airplane. One system provides 150-PSI pressure for inflating the tires on the ground. The other system provides 3,000 PSI pressure for pressurizing the main landing gear struts.

Both compressors are located in the right landing gear pod between the forward and aft main landing gears.

LOW PRESSURE PNEUMATIC SYSTEM (LPPS).

The LPPS utilizes a turbo compressor which is driven by bleed air from the engines or either APU. The out put of either APU is sufficient to operate the turbo compressor at rated output (figure 1-30). Bleed air for turbo compressor operation passes through a pressure regulator and shutoff valve which is controlled by a switch in the right forward main landing gear wheel well.

A pressure switch senses inlet pressure to the regulator and shutoff valve. When the system is turned on, the pressure switch will not energize the shutoff valve to open until the inlet pressure is between 17 and 24 PSI. If inlet pressure drops to 18 (±1) PSI, the system will shut down.

The system electrical circuit contains a lockout relay which will prevent the system from turning on after a shutdown without first resetting the start switch.

Thermal switches are provided in the system to close the pressure regulator and shutoff valve if the bleed air temperature exceeds 274°C. Two outlets for the low pressure system are located in the right forward landing gear wheel well.

LPPS Controls.

LPPS SWITCH. The LPPS switch is located on an enclosed panel in the right forward main gear wheel well. Placing the switch to "START" arms the pressure regulator and shutoff valve and arms the ATM priority valve. When the bleed air manifold pressure reaches 17 to 24 PSI, the pressure switch actuates and opens the pressure regulator and shutoff valve to operate the turbo compressor. Placing the switch to "STOP" closes the valve. The switch receives 28-volt DC power from the main DC bus No. 2 (figure 1-67).

CAUTION

Prior to actuation of the tire inflation system, all personnel should be cleared from the right rear main landing gear wheel well. Ear protection should be compatible with the distance personnel are from the wheel well area. Ear muffs and ear plugs are required within a 20-foot radius of the turbo pump exhaust.

WHEEL WELL ISOLATION VALVE SWITCH. On 00461 and up and airplanes modified by T.O. 1345, a WHEEL WELL ISO VALVE switch is located at fuselage station 1480 on the right hand side of the cargo compartment in the hydraulic service center. Placing the switch to "OPEN" opens the wheel well isolation valve that supplies bleed air to the low pressure turbo compressor for tire inflation. Placing the switch to "CLOSED" closes the valve and shuts off the supply of bleed air to the turbo compressor. The switch controls 28-volt DC power from the main DC bus No. 2 (figure 1-67).

POWER SUPPLY AND ISO VALVE SWITCH. On 68304, 68307, 70167, 70168 and 70170 through 00460 not modified by T.O. 1345, a PWR SUPPLY & ISO VALVE switch is located on the AUX KNEEL CONTROL panel (figure 1-37). The AUX KNEEL CONTROL panel is installed on the right hand side of the cargo compartment in the hydraulic service center. Placing the switch to "ON" opens the wheel well isolation valve, that supplies bleed air to the low pressure turbo compressor for tire inflation, and arms the kneeling system control module. Placing the

switch to "OFF" closes the wheel well isolation valve and disarms the kneeling system control module. The switch controls 28-volt DC power from the main DC bus No. 2 (figure 1-67).

LPPS Indicators.

WHEEL WELL ISOLATION VALVE OPEN LIGHT. The WHEEL WELL ISO VALVE OPEN light (figure 1-21) comes on whenever the wheel well isolation valve opens. The light receives 28-volt DC power from the main DC bus No. 1 through the KNEEL IND LT circuit breaker on the flight engineer's circuit breaker panel No. 6 (figure 1-68).

LPPS Normal Operation.

When operating the LPPS simultaneously with one or more pneumatic subsystems, two APU's must be used and the following operating procedures applied:

a. Turn on the other pneumatic subsystems prior to starting the LPPS. It may be necessary to hold the LOW PRESSURE switch in the "START" position until the ATM priority valve starts controlling the bleed air, before the LPPS will continue to operate satisfactorily.

b. If an ATM or an air conditioning unit is started while the LPPS is operating, the LPPS may shut down during the start. If this happens, the LPPS can be immediately restarted and will operate normally.

This condition may occur when the LPPS and an ATM are operating and one air conditioning system is started, and is due to low bleed air pressure causing the LPPS low pressure switch to actuate.

HIGH PRESSURE PNEUMATIC SYSTEM (HPPS).

The HPPS utilizes a piston-type compressor which is driven by hydraulic pressure from the No. 4 hydraulic system (figure 1-31). Pressurized air from the compressor passes through an electrically operated heating element, that is thermostatically activated at a pre-determined temperature to prevent freezing of collected moisture within the moisture separator, a moisture separator, a chemical drier and then to an outlet located adjacent to the compressor.

HPPS Switch.

The HPPS switch is located on an enclosed panel in the right forward main gear wheel well. Placing the switch to "ON" supplies 115-volt AC power to the heating element and supplies 28-volt DC power to open a solenoid-operated valve which directs hydraulic pressure to the compressor motor. Placing the switch to "OFF" deenergizes the heating element and closes the solenoid-operated hydraulic shutoff valve. The heating element receives 115-volt, phase B, AC power from the aft main AC bus No. 4 (figure 1-70). The solenoid-operated hydraulic shutoff valve receives 28-volt DC power from the main DC bus No. 2 (figure 1-67).

TIRE AND STRUT SERVICING KIT.

The tire and strut servicing kit consists of three hoses for strut inflation and two hoses for tire inflation. Two of the strut inflation hoses are 45 feet long and one is ten feet long. Both tire inflation hoses are 20 feet long and are equipped with a low pressure (0-400 PSI) gage and a manual shut-off valve. The hoses are stowed in the loose equipment stowage lockers on the left and right sides of the cargo compartment at fuselage station 684.

AIR TURBINE MOTORS (ATM).

The airplane is equipped with two ATM's located in the lower aft inboard area of each APU compartment, each driving a 40-GPM, variable-displacement hydraulic pump. The ATM's are provided as an auxiliary hydraulic power source for use during ground operation and for emergency inflight operation. The ATM's are driven by bleed air from the APU's, an external source, or the main engines. Either or both of the APU's can supply bleed air to drive either ATM. Each ATM is controlled by an ATM pump switch on the hydraulic panel and a momentary START switch on the ATM pump pressure panel on the flight engineer's console (figure 1-35).

ATM TURBINE SECTION.

The ATM turbine section consists of an inlet shutoff valve, a turbine scroll, a variable-area nozzle assembly, and a turbine wheel. The inlet shutoff valve is a normally closed, solenoid-operated valve mounted on the turbine scroll. The valve is controlled by the applicable ATM toggle switch located on the flight engineer's hydraulic panel. The turbine scroll receives bleed air from the shutoff valve and directs it through variable area nozzles to the turbine wheel. During normal operation, turbine speed is approximately 38,200 RPM.

ATM SPEED CONTROL.

ATM speed is controlled by the variable area nozzles in the turbine scroll. The nozzles are positioned by a pneudraulic servo actuator which receives its

signal from a pneumatic speed sensor. Pneumatic supply for the speed sensor is obtained from the turbine inlet, and hydraulic pressure for the actuator is furnished by the lubricating oil system. The nozzle vanes are aerodynamically loaded to the closed position. Therefore a failure of the nozzle actuator linkage will close the nozzle and shut down the ATM. ATM overspeed is prevented by a flyweight governor which when sensing an overspeed condition closes the ATM inlet shutoff valve. Loss of ATM oil pressure will cause the spring-loaded nozzle actuator to fully open the nozzle. The ATM will then shut down due to overspeed.

ATM OIL SYSTEM.

The ATM oil system is a self-contained system which supplies oil under pressure to the servo-actuator for speed control, and to the various oil jets for bearing and gear lubrication. Oil under pressure is supplied by a pump installed in the integral gear case/oil sump. An oil pressure switch is installed in the ATM oil system. If the oil pressure drops below a preset value, due to an oil system malfunction or low oil quantity, the pressure switch opens and causes the ATM pneumatic air shutoff valve and the ATM hydraulic pump pressure valve to close. The oil filler cap incorporates a dipstick for measuring oil quantity.

ATM SWITCHES.

Air Turbine Motor (ATM) Pump Switches.

The ATM PUMP switches, one for each air turbine motor, are located on the flight engineer's hydraulic panel (figure 1-35). The switches are used to control the flow of bleed air to the respective ATM. When a switch is placed to "ON," the following actions occur:

(1) When the START switch is actuated, 28-volt DC power opens a shut-off valve at the respective ATM, allowing bleed air to enter and run the ATM.

(2) 28-volt DC power and ATM pump hydraulic pressure open the solenoid operated shut-off valve on the ATM hydraulic pump pressure line. The hydraulic pump pressure line valve closes whenever electrical power is removed.

(3) 28-volt DC power is directed through the contacts of either ATM hydraulic pump control relay, each of the four engine starting relays to the ATM priority valve and to ground through either of the APU 35-percent relays. Whenever any of the starter buttons are depressed, power to the ATM priority valve is interrupted, opening the priority valve. When the ATM priority valve is energized, adequate APU bleed air pressure is maintained for ATM operation. The priority valve will open fully when bleed air is supplied by the engines.

The "REMOTE" position is used to provide power to the ATM switches in the cargo compartment.

The ATM priority valve receives 28-volt DC power from the main DC bus No. 2 (figure 1-67). The No. 1 ATM pneumatic control valve, pump pressure line valve and pump suction line shutoff valve receive 28-volt DC power from the battery bus (figure 1-64). The No. 4 pneumatic control valve and the pump pressure line valve receive 28-volt DC power from the main DC bus No. 2 (figure 1-67). The No. 4 ATM pump suction line shutoff valve receives 28-volt DC power from the battery bus (figure 1-64).

The ATM's can be operated in the following manner:

(1) When external air is available, no APU's are operating and both APU isolation valves are closed, only the left ATM can be operated. When both isolation valves are open, both ATM's can be operated.

(2) When the left APU is operating and both APU isolation valves are closed, only the left ATM can be operated. When both APU isolation valves are open, both ATM's can be operated.

(3) When the right APU is operating and both APU isolation valves are closed, only the right ATM can be operated. When both APU isolation valves are open, both ATM's can be operated.

(4) When one or more engines are operating, and both APU isolation valves are open, both ATM's can be operated. Closing one APU isolation valve will shut down the respective ATM, if operating.

CAUTION

If for any reason shutdown of the ATM is done at high flow demand, inspect the hydraulic panel in the wheel area for leakage due to the possibility of hydraulic line rupture. Normal shutdown of the ATM should be done with no flow demand. On 90001 and up and airplanes modified by T.O. 1021 these precautions do not apply.

ATM Start Switches.

A momentary, two-position ATM START switch is located on the flight engineer's ATM pump pressure panel (figure 1-35). This switch is used to override the ATM oil pressure switch when the ATM is started. The ATM oil pressure switch is installed to shut down the ATM if the oil pressure is not maintained at a preset level. However, during an ATM start, there is no oil pressure, so the START switch is used to override the oil pressure switch after the ATM PUMP switch is placed to "ON". If the ATM oil supply is too low, after the ATM is started, the ATM will shut down when the START switch is released to the center (OFF) position.

ATM OPERATION.

Turning on ATM.

To turn on the ATMs, accomplish the following:

1. Floor Heat Switch - OFF OR FANS ONLY

Note

Do not turn on the floor heat system during operation of the ATMs. Insufficient bleed air pressure can cause one or both ATMs to stall out if simultaneous operation of both systems is attempted.

2. Sys No. 1 and No. 4 Hydraulic Boost Pumps - ON

Check that the system No. 1 and No. 4 boost Press Low lights go out.

3. ATMs - ON

a. ATM Pump Switches - ON

b. ATM Start Switches - START

Place and hold the START switches to START until the ATM pump pressure light and the valve open light come on and hydraulic pressure stabilizes.

CAUTION

During operation of the ATM, a qualified operator will be on the flight deck to monitor ATM operation. During start of an ATM, if normal hydraulic pressure is not observed within 15 seconds, shut down the ATM. If, during operation of an ATM, a complete loss of hydraulic pressure is experienced in that system or the ATM pump pressure light goes out, shut down the affected ATM and do not attempt to restart it.

Turning off ATM.

To turn off the ATMs, accomplish the following:

1. ATM Pump Switches - OFF

2. Sys No. 1 and No. 4 Hydraulic Boost Pumps - OFF

HYDRAULIC POWER SUPPLY SYSTEM.

Four separate and functionally independent hydraulic systems (figures 1-32 and 1-33) are installed on the airplane. The systems are designated No. 1, No. 2, No. 3, and No. 4. Each system consists of two engine-driven hydraulic pumps, a hydraulically driven suction boost pump, a reservoir, a power transfer unit, and the necessary tubing and valves. Two additional pumps, each driven by a separate ATM, are provided to supply hydraulic pressure during flight and for ground operation. One of the ATM pumps pressurizes system No. 1 and the other ATM pump pressurizes system No. 4. A ram air turbine pump is also provided to supply system 2 pressure in the event of total power failure. See figure 1-34 for hydraulic power distribution.

HYDRAULIC SYSTEM SERVICING PROVISIONS.

Two methods are available for hydraulic reservoir servicing. A ground fill connection in the right main landing gear fairing is provided for external servicing. A handpump and fluid receptacle are provided in service center No. 3 for inflight or remote servicing. A selector valve located adjacent to the handpump is provided to select the hydraulic reservoir to be serviced.

HYDRAULIC FLUID COOLING.

Each hydraulic system is equipped with a heat exchanger for fluid cooling. The heat exchangers for hydraulic systems No. 1 and No. 2 are installed in the No. 2 main fuel tank. The heat exchangers for hydraulic lic systems No. 3 and No. 4 are installed in the No. 3 main fuel tank. Hydraulic fluid from the pump case drain is circulated through the heat exchangers and then to the return system. The heat exchangers maintain the case drain hydraulic fluid temperature between 130°F and 150°F at the heat exchanger outlet.

ENGINE-DRIVEN HYDRAULIC PUMPS.

Each hydraulic system is pressurized by two variable displacement, 60-GPM pumps which are connected in parallel and driven by the respective engine. The pumps furnish the required 3,000 PSI hydraulic pressure in varying volume as required to operate the respective system components.

HYDRAULIC SUCTION BOOST PUMPS.

Each hydraulic system contains a hydraulically driven suction boost pump. Each pump is used to provide a flow of pressurized fluid from an unpressurized reservoir to the engine-driven pumps. Each boost pump normally receives its operating pressure from the engine-driven pumps which it supplies, and will operate as long as there is hydraulic pressure supplied to the system. Operation of the boost pump is required prior to engine start so that the engine-driven pumps will not cavitate. This is accomplished by utilizing an ATM hydraulic pump or power from an operating system (through a power transfer unit) to drive the suction boost pump motor prior to engine start.

Hydraulic systems No. 1 and No. 4 also contain electrically driven suction boost pumps. These pumps are used during engine start, ground operation and take-off and landing to pressurize the suction lines to the engine-driven pumps and ATMs.

They are also used any time a hydraulically driven boost pump fails. These pumps shall be turned on prior to starting the ATMs and turned off after the ATMs are shut down. They shall also be operated during take-off and landing.

HYDRAULIC RESERVOIRS.

Each hydraulic system contains an unpressurized type hydraulic reservoir. Each reservoir has a 10-micron filter in the air inlet line and a check valve in the overboard vent line. Baffles are incorporated in each reservoir so that the suction port is always covered with fluid for limited zero "g" conditions. Each reservoir incorporates a sight gage on the side of the container and a fluid level indicator which provides a remote quantity readout on its respective gage on the flight engineer's hydraulic panel. The quantity indicators on the flight engineer's panel are intended to indicate fluid quantity trends and are not to be used for reservoir servicing devices.

POWER TRANSFER UNITS (PTU).

Power transfer units are utilized to enable the transfer of power from a lightly loaded hydraulic system to a heavily loaded system, thereby making more efficient use of the total hydraulic power capabilities. The units may also be used to pressurize a system that is unpressurized due to engine or hydraulic pump failure as long as fluid remains in the system. These units allow a pump (engine- or ATM-driven) to supply power to an adjacent hydraulic system without fluid connection between the systems. These units are installed between hydraulic systems No. 1 and No. 2, between systems No. 3 and No. 4, and between systems No. 2 and No. 3. The power transfer unit is reversible and is basically two constant displacement motors connected together by a common shaft. The motors are plumbed into separate systems. When the pressure decreases in one system, the respective motor functions as a pump driven by the motor in the other system. The operation of the power transfer units is controlled by individual selector switches located on the flight engineer's hydraulic panel. When a switch is actuated it opens the shutoff valves in both motor circuits simultaneously. The power transfer units are energized during take-off and landing when the loads are greatest and also during ground maintenance and emergency operation. Priority valves are installed on the system No. 2 side of the No. 1-No. 2 unit and on the system No. 3 side of the No. 3-No. 4 unit to provide pressure priority for the primary flight control systems.

AIR TURBINE MOTOR HYDRAULIC PUMPS.

Two air turbine motor driven hydraulic pumps, each driven by a separate air turbine motor, are provided to supply hydraulic pressure during ground operation or for maintenance purposes and for emergency in-flight operation. One ATM pump pressurizes hydraulic system No. 1, and the other ATM pump pressurizes hydraulic system No. 4. The ATM pumps are 40-GPM pumps and are controlled by switches on the flight engineer's console.

A motor-operated shutoff valve is in the suction line of each ATM hydraulic pump. The valve is normally open and is closed when the respective APU fire emergency control handle is pulled. A solenoid-controlled and hydraulically opened shutoff valve is installed in the pressure line of each hydraulic pump. The valve closes anytime electrical power is removed; either by turning the respective ATM PUMP switch to "OFF," or pulling the respective APU fire emergency control handle. ATM pump pressure and electric power are required to keep the valve open.

A time delay relay delays the closing of the ATM hydraulic pressure line shutoff valve approximately 2-1/2 seconds after the ATM is manually turned off or when the ATM oil pressure switch opens and shuts down the ATM.

When an APU fire emergency control handle is pulled, the respective ATM pneumatic shutoff valve closes immediately. The ATM hydraulic pump suction and pressure valves close approximately 2-1/2 seconds later.

On 90001 and up and airplanes modified by T.O. 1021, an accumulator is installed on each ATM hydraulic pump suction line between the suction line shutoff valve and the pump. The accumulators absorb hydraulic surges that may occur during ATM starting and stopping. An accumulator is located on the center inboard floor of each aft MLG fairing. A preload pressure gage is provided on the accumulator.

RAM AIR TURBINE (RAT) HYDRAULIC PUMP.

A RAT pump is provided to supply pressure to hydraulic system No. 2 in the event of total power failure. The RAT provides capability for airplane control using limited flight controls for as long a time as is required to restart the engines or ATM pumps. With the RAT pump supplying pressure to system No. 2 only, the only aircraft components to receive pressure will be flight spoiler panels No. 5, No. 7, and No. 9 on each wing, both ailerons, the elevators, the lower rudder, the pitch trim nut driven actuator, the emergency generator, and the No. 2 hydraulic system suction boost pump. The RAT is extended into the airstream by means of a hydraulic actuator powered by an accumulator. The RAT may be deployed manually by a switch on the pilot's main instrument panel. The RAT will automatically deploy in flight if both inboard and either outboard constant speed drive underspeed relays are tripped.

Since the CSD underspeed relays are powered by the respective permanent magnet generators, placing both inboard and either outboard GENERATOR switch to "OFF" will also deploy the RAT.

Note

Whenever the RAT is deployed either manually or automatically, the control circuit for the 1-2 hydraulic power transfer unit is deenergized.

HYDRAULIC SYSTEM CONTROLS.

Hydraulic Pump Depressurization Switches.

Each engine-driven hydraulic pump may be depressurized by use of a separate switch located on the hydraulic panel (figure 1-35). Placing a switch to "DEPRESS" electrically actuates a control valve which depressurizes the respective pump internally to approximately 1,000 PSI. This action also causes a pressure-actuated check valve located in the outlet port of the pump to close, blocking pump output. When a pump is in the depressurized mode, the input horsepower is low and is completely dissipated in heat. This mode is used to remove a major portion of the hydraulic load from the engine during start or when MADAR readings indicate that the pumps are failing. This mode shall also be used whenever there is significant fluid loss from a hydraulic system. The hydraulic pump depressurization switches and valves receive 28-volt DC power from the isolated DC bus (figure 1-64).

Electric Suction Boost Pump Switches.

Two BOOST PUMP switches on the hydraulic control panel are used to control the electrically driven suction boost pumps for hydraulic systems No. 1 and No. 4. Placing the switches to "ON" turns on the pumps. Placing the switches to "OFF" turns the pumps off. The switches control 115-volt AC power from the aft main AC buses No. 1 and No. 4 (figure 1-70).

Ram Air Turbine Switch.

The RAM AIR TURBINE switch, located on the pilot's instrument panel (figure 1-9), is provided to extend or retract the ram air turbine. Placing the switch to "DEPLOY" supplies 28-volt DC power to open the RAT pump extend solenoid valve, allowing pressure from hydraulic system No. 2 or from a system pressurized accumulator (if system No. 2 is depressurized) to extend the RAT into the air stream and to pressurize the hydraulic suction boost pump to prevent cavitation. Placing the switch to "RETRACT," reverses the process to retract the RAT. In the "AUTO" position, the RAT will automatically deploy when the two inboard and either outboard CSD underspeed sensing relays are tripped. Since the CSD underspeed sensing relays are powered by the respective permanent magnet generators, placing both inboard and either outboard generator switches to "OFF" will also deploy the RAT. The "AUTO" position is energized through a series-parallel combination of four pressure switches (one switch per bogie) and is operable only when the airplane is in flight. The RAM AIR TURBINE switch and solenoid valves receive 28-volt DC power from the battery bus (figure 1-64).

WARNING

If deploying the RAT on the ground, check with ground personnel to ensure that the area around the RAT is clear of personnel and equipment. Failure to do so could result in injury to personnel or damage to equipment.

CAUTION

Do not deploy the RAT on the ground when in a kneeled configuration. To do so will cause the RAT to strike the ground.

Emergency RAT Deployment and Retraction Override Pushbuttons.

A guarded emergency RAT deployment Override Pushbutton, located in the No. 2 hydraulic service center approximately at fuselage station 1133 is used to deploy the RAT in the event the "AUTO" or "DEPLOY" positions of the RAM AIR TURBINE switch do not deploy the RAT.

Removing the guard from the pushbutton and depressing the pushbutton overrides the solenoid-operated valve and allows the RAT accumulator to power the RAT deployment actuator.

An emergency RAT retraction override pushbutton, located immediately aft of the guarded deployment pushbutton, is used to retract the RAT in the event the "RETRACT" position of the RAM AIR TURBINE switch does not retract the RAT.

PTU Switches.

Three POWER TRANSFER unit switches, one for each PTU, are located on the hydraulic panel (figure 1-35). Placing a switch to "ON" provides 28-volt DC power to open solenoid-operated shutoff valves in both valves of the respective PTU. This allows hydraulic pressure from both systems connected by the PTU to pressurize both halves of the unit. In this manner, power from a lightly loaded system may be transferred to a heavily loaded system. Placing a switch to "OFF," closes the solenoid valves and isolates the unit from both connecting hydraulic systems. The PTU switch for systems 1 and 2 routes 28-volt battery bus power to the

respective solenoid valves (figure 1-64). The PTU switch for systems 2 and 3 routes 28-volt main DC bus No. 1 power to the respective solenoid valves (figure 1-68). The PTU switch for systems 3 and 4 routes 28-volt main DC bus No. 2 power to the respective solenoid valves (figure 1-67).

Engine Fire Emergency Control Handles.

When a fire emergency control handle is pulled, a motor-operated shutoff valve closes, shutting off hydraulic suction flow to both engine driven pumps of the affected engine, and depressurizes the pumps.

PTU Override Buttons.

The hydraulic shutoff valves on either side of a PTU may be manually opened by override buttons located in the hydraulic service centers and on the wing rear beam. The override button for the valve on the No. 1 side of the system 1-2 PTU is located in the No. 1 hydraulic service center. The override button for the valve on the No. 2 side of the 1-2 PTU is located in the No. 2 service center. The override buttons for the valves on either side of the system 2-3 PTU are located on the wing rear beam. The override buttons for the valves on the No. 3 and 4 sides of the system 3-4 PTU are located in the associated No. 3 and 4 service centers. Depressing and holding an override button opens the respective shutoff valve. The override buttons are spring-loaded to the closed position.

HYDRAULIC SYSTEM INDICATORS.

Hydraulic Reservoir Level Indication.

Four remote indicating hydraulic reservoir level indicators are located on the hydraulic panel (figure 1-35). The indicator dials are marked FULL and REFILL. Each indicator receives signals from a transmitter mounted on the respective fluid reservoir. The gages receive 28-volt DC power from the main DC buses No. 1 and No. 2 (figures 1-67 and 1-68).

Hydraulic Pressure Indicators.

Four hydraulic pressure indicators, one for each system, are located on the hydraulic panel (figure 1-35). Each indicator is graduated from 0 to 4,000 PSI in increments of 250 PSI and indicates the pressure of the respective hydraulic system. Each indicator receives signals from a pressure transmitter installed in the system pressure line. The indicators and pressure transmitters receive 26-volt AC power from the AC instrument buses No. 1, 2, 3, and 4 (figures 1-65 and 1-66). Also, one direct reading hydraulic pressure gage is installed, at each hydraulic system service center.

Engine-Driven Hydraulic Pump Pressure Low Lights.

Eight PRESS LOW lights, one for each engine-driven hydraulic pump, are located on the hydraulic panel (figure 1-35). The lights will come on when the output pressure of the respective engine-driven pump falls below 1,350 (±150) PSI. The lights receive 28-volt DC power from the main DC buses No. 1 and No. 2 (figures 1-67 and 1-68).

Hydraulic Boost Pressure Low Lights.

Four hydraulic BOOST PRESS LOW lights, one for each system boost pump, are located on the hydraulic panel (figure 1-35). The lights will come on when the respective boost pump output pressure falls below 25 PSI. The lights receive 28-volt DC power from the main DC buses No. 1 and No. 2 (figures 1-67 and 1-68).

ATM Pump Pressure On Lights.

Two ATM PUMP PRESS. ON lights, one for each ATM hydraulic pump, are located on the flight engineer's ATM PUMP PRESS. panel (figure 1-35). These lights will come on when the pressure in the output line of the respective ATM hydraulic pump reaches 240 PSI. The SYS 1 light receives 28-volt DC power from the battery bus (figure 1-64). The SYS 4 light receives 28-volt DC power from the main DC bus No. 2 (figure 1-67).

CAUTION

If an ATM pump pressure light comes on with the ATM switch in "OFF", immediately depressurize its respective hydraulic system.

ATM Pump Pressure Valve Open Lights.

Two ATM PUMP PRESS VALVE OPEN lights, one for each ATM hydraulic pump pressure line shutoff valve, are located on the flight engineer's ATM PUMP PRESS. panel (figure 1-35). These lights will come on when the respective ATM hydraulic pump pressure line shutoff valve is energized. The SYS 1 VALVE OPEN light receives 28-volt DC power from the battery bus (figure 1-64). The SYS 4 VALVE OPEN light receives 28-volt DC power from the main DC bus No. 2 (figure 1-67).

Ram Air Turbine Indicator Lights.

DEPLOY RAT LIGHT. A DEPLOY RAT light, located on the pilot's instrument panel (figure 1-9) comes on whenever a RAT extend signal is available through

both inboard and either outboard CSD or when both inboard and either outboard generator switches are placed to "OFF." The light receives 28-volt DC power from the battery bus (figure 1-64).

RAT UNLOCKED LIGHT. A RAT UNLOCKED light, located on the pilots' annunciator panel (figure 1-128) comes on when the RAT is out of the stowed and locked position. The light receives 28-volt DC power from the battery bus (figure 1-64).

LANDING GEAR SYSTEM.

The landing gear is a fully retractable tricycle type with a main gear consisting of four six-wheel bogie-type units which retract into pods on each side of the airplane, and a nose gear consisting of a four-wheel steerable unit which retracts aft into the fuselage nose wheel well (figure 1-36). The landing gear system incorporates a crosswind positioning system. The aft main gear also incorporates a caster feature for ground maneuvering. The landing gear may be kneeled to facilitate airplane loading. Normal retraction time for the landing gear is 20 seconds and normal extension time is 15 seconds.

Note

During any prolonged period of cold soak, the retraction or extension time will take longer; but in no case shall it exceed twice the normal time.

MAIN LANDING GEAR.

15-87

Each of the main landing gear bogies mounts two wheels forward of the shock strut and four wheels aft of the shock strut. The main shock strut piston assembly, which is attached to the bogie, is splined to an orifice support tube which protrudes through the top of the shock strut and is splined to a crank arm. The crank arm is rotated by either a normal or emergency bogie rotation actuator. The bogie rotation actuators are used to rotate the gear 90 degrees during extension and retraction cycles.

Two crosswind positioning actuators are attached to and rotate the crosswind position collar to effect crosswind positioning. This collar will be engaged to the crank arm by an inter-collar lock device when the main landing gear is extended and rotated to the 0-degree position. Operation of the inter-collar lock device to engage the crank arm with the crosswind positioning collar is accomplished by either a normal or an emergency hydraulic actuator.

Each main landing gear assembly is extended and retracted by a separate actuating system. Each system consists of torque shafts and linkages driven through a main gearbox which is powered by a hydraulic motor for normal extension and retraction, or by an electric motor for emergency extension. Both aft main gear utilize pressure from hydraulic system No. 1 for normal operation. Both forward main gear utilize pressure from hydraulic system No. 4 for normal operation.

Main Landing Gear Doors.

Each main gear pod has two doors for each gear. These doors are operated by mechanical linkages which are driven by the extension/retraction hydraulic motor. The inboard door, which is hinged to the pod structure along its inboard edge, opens during, and closes following, gear extension or retraction. The outboard door, which is attached to a four-bar linkage, opens to a position at the upper side of the pod against the fuselage. Two slot doors in the pod structure allow the linkage actuation arms to reach the door open position. Four locks on each outboard door are normally operated by push-pull rods connected to two hydraulic actuators. An integral hydraulic actuator opens each lock for emergency operation. The inboard doors are held closed by the actuation linkage. When the gear is down, the doors are kept in the fully open position by the actuating linkage pushing the upper edge of the door against the fuselage. Continuing hydraulic pressure on the actuator maintains force on the door to prevent flutter.

Main Landing Gear Retraction.

When the Landing Gear Lever is placed to "UP," and upon completion of centering and wheel spin down (approximately 5 seconds), a gear up rotate solenoid valve is energized which allows hydraulic pressure to disengage the crosswind positioning collar from the crank arm. Hydraulic pressure is then applied to the normal bogie rotation actuator to rotate the bogie 90 degrees so that the two front wheels are pointing inboard. This pressure is maintained on the bogie rotation actuator to hold the bogie in the 90-degree position while the gear is retracting. Upon completion of bogie rotation, hydraulic pressure is applied to the landing gear down lock actuator and to the retraction drive motor. The down lock actuator retracts to unlock the landing gear side brace and a hydraulic motor rotates the landing gear assembly inboard and up toward the retracted position. As the gear starts up, the bogie maintains its position perpendicular to the shock strut. As the front wheels enter the wheel well, rollers between the two front wheels come in contact with a ramping track which disengages the bogie pitch positioner and causes the bogie to pivot about the shock strut attach point and assume a position approximately parallel to the shock strut at the fully retracted position. When the gear is completely retracted and the outboard doors are locked, the gear-up command is removed and the hydraulic pressure to the actuating devices is vented to return. It should be noted that the main landing gear does not have any uplocks as such. The gear is held in the retracted position by an over center link in the retraction mechanism and by the gear door locks.

Alternate Main Landing Gear Retraction Procedure.

The following alternate override procedures may be used to retract one main landing gear only from a green wheels indication when an electrical malfunction is highly probable. Check the Form 781 to insure that inflight kneeling of the affected gear is operational.

CAUTION

The scanner's observation of the malfunctioning gear shall agree completely with the indication observed at the flight station. Do not attempt to override gear that has indicating system malfunctions, bogie pitch light on, and/or kneeling system lights on.

1. Depressurize the airplane.

2. Remove the affected MLG inspection cover.

3. Visually observe the condition and position of the affected MLG to the maximum extent possible to include:

a. Position of the MLG door for any position other than against the fuselage.

b. Hydraulic leaks.

c. Evidence of mechanical failure.

d. Evidence of movement either observed from the flight station indicators or actual observation of the gear.

If there is evidence of any of the above conditions, place the landing gear lever to "DN", check that the gear is down (green wheels) and discontinue alternate gear retraction procedures.

If none of the above conditions are noted, and the landing gear crosswind position indicators (copilot's side console) indicate zero degrees, and the MLG position indicator indicates green wheels, proceed with step 5 to retract the gear.

4. Depress and hold the ROTATE (GEAR UP) button of the affected MLG. Once the gear has rotated, the gear may retract normally.

CAUTION

If the ROTATE (GEAR DOWN) button is inadvertently depressed, damage to the airplane will result.

5. If the affected gear does not fully retract and indicate up and locked, visually and verbally verify (scanner and flight station indications) that the gear has rotated to the 90-degree position.

6. Hold the ROTATE (GEAR UP) button and depress and hold the GEAR UP button of the affected gear for a minimum of 20 seconds to allow the gear to retract and the doors to close and lock.

7. On airplanes modified by T. O. 1271, if the gear does not indicate up and locked after the doors close, release the ROTATE (GEAR UP) button and depress the manual LG DOOR LOCK button.

8. When the gear indicates up and locked and the light in the landing gear goes off, release the override buttons.

9. If the gear does not indicate up and locked after using the above procedures, proceed as follows:

a. Release all override buttons and place the landing gear lever to "DN."

b. When all gears indicate down and locked, open the MLG CONTROL circuit breaker for the affected gear.

c. Place the landing gear lever to "UP."

10. Replace the MLG inspection cover.

11. Pressurize the airplane.

Main Landing Gear Extension.

When the Landing Gear Lever is placed to "DN," hydraulic pressure is directed to the bogie rotation actuator to hold the bogie in the 90-degree position while the gear is extending, outboard door lock actuators, gear downlock cylinder, and to the gear drive motor. The doors unlock and the landing gear assembly starts to swing down and outboard. As the shock strut moves down, the ramping track repositions the bogie perpendicular to the shock strut and allows the bogie pitch positioning cylinder to engage. When the gear is down, hydraulic pressure applied to the gear down-lock actuator locks the gear side brace. The downlock switch electrically opens a valve to supply pressure to the bogie rotation actuator and the intercollar lock actuator. The rotation actuator rotates the bogie 90 degrees to the forward rolling position and the intercollar lock engages the crosswind positioning collar to the crank arm. After the crosswind positioning collar is engaged, a sequence valve is mechanically actuated to vent pressure from the bogie rotation actuator, allowing it to move freely if a crosswind positioning command is initiated.

Main Landing Gear Emergency Extension.

For emergency extension, each main landing gear is operated individually by a separate switch on the control pedestal (figure 1-37). When a gear down command is initiated by an emergency switch, a hydraulic solenoid valve closes, ensuring isolation of the normal hydraulic system from the landing gear actuating system. At the same time, the emergency extension electric motor is energized, and the main

landing gear emergency door lock cylinders, clutches, down lock cylinders and emergency inboard center solenoid valve receive hydraulic pressure as follows:

(1) Emergency hydraulic pressure is supplied to the forward main landing gear from hydraulic system No. 1. In the event system No. 1 is depressurized, the left APU start accumulator supplies hydraulic pressure. The left APU start accumulator can be pressurized with its handpump.

(2) Emergency hydraulic pressure is supplied to the aft main landing gear from hydraulic system No. 4. In the event system No. 4 is depressurized, the right APU start accumulator supplies hydraulic pressure. The right APU start accumulator can be pressurized with its handpump.

When the gear is fully down, the emergency side brace locking actuator locks the gear in the down position. Hydraulic pressure is then directed to the emergency bogie rotation actuator and to the emergency inter collar lock actuator. The bogic rotates 90 degrees to the forward rolling position and the inter collar lock engages the crosswind positioning collar to the crank arm.

In the event that systems No. 1 and No. 4 hydraulic pressure are lost, the emergency bogie rotation actuators are pressurized by the APU start accumulators. When the appropriate LANDING GEAR EMERGENCY EXTEND switch is actuated, APU start accumulator hydraulic pressure pressurizes the emergency bogie rotation actuator (figure 1-36). The gear rotates from the 90-degree inboard position to the 0-degree forward rolling position.

Note

Total MLG extension time is approximately 3 minutes.

NOSE LANDING GEAR.

The nose landing gear consists of four wheels mounted on a common axle on a shock strut. The shock strut is attached to the airframe by means of a trunnion. Retraction is aft into a fuselage wheel well and is accomplished using dual ball screws, a two-speed gearbox and power actuators. The ball screws are driven by a single drive shaft through the gear-box which is powered by a hydraulic motor for normal extension and retraction or by an electric motor for emergency extension. The two-speed gearbox is used in the high speed/low torque mode for extension and retraction and is shifted to the low speed/high torque mode for kneeling. The drive gearbox is manually shifted from a high speed, low torque output to a low speed, high torque by using the NLG GEAR SHIFT switch (figure 1-37).

Nose Landing Gear Doors.

The nose gear fairing contains five nose gear doors. Four of the doors are operated during nose gear extension and retraction. Two outboard doors are hinged to the nose gear fairing along their outboard edge; two inboard doors are hinged to the outboard doors. The doors open at the airplane centerline and move outboard during extension. The fifth door, which forms the aft part of the fairing, is retracted during nose gear kneeling operations to obtain ground clearance.

The left and right door assemblies are mechanically independent of the nose gear and of each other. Each door assembly is opened and closed by two drive arms which are operated by mechanical actuators. These actuators are normally driven by torque tubes connected to a gearbox powered by a hydraulic motor. In emergency nose gear extension, the actuators are driven by an electric motor which directly drives the forward actuator and remotely drives the aft actuator through a flexible shaft. In normal operation, system No. 1 hydraulic pressure positions the actuator for operation by the torque tubes; in emergency operation, hydraulic pressure from the crew door accumulator shifts both front and rear actuators for operation by the electric motor.

Nose Landing Gear Retraction.

When the landing gear lever is placed to "UP," and the nose gear is within 5 degrees of center, hydraulic pressure is directed to the nose gear lock cylinder and to the nose gear retraction hydraulic motor (figure 1-36). The nose gear lock actuating cylinder unlocks the nose gear drag brace, and the nose gear starts to retract. When the gear is fully retracted, the gear lock actuator locks the drag brace in the up position. The nose gear door actuating system is then sequenced to close and lock the doors. At the completion of the retraction cycle, hydraulic pressure is vented from the actuating mechanism.

CAUTION

The NLG RETRACT ONLY valve manual override button has been deactivated with safety wire. The override button is not to be used for gear retraction as damage can result if the NLG shifter is in the low speed, high torque position.

Nose Landing Gear Extension.

When the Landing Gear Lever is placed to "DN" hydraulic pressure is directed to simultaneously unlock the door uplocks and open the doors. When the doors

are open, proximity switches at the doors energize solenoid valves which direct hydraulic pressure to the nose gear lock and hydraulic drive motor. The gear lock actuator unlocks the drag brace and the gear starts down. When the gear is fully extended, the gear lock actuator locks the drag brace in the extended position.

Nose Landing Gear Emergency Extension.

Nose landing gear emergency extension is initiated by an emergency switch in the flight station. When the emergency switch is actuated, the following action occurs:

(1) An emergency isolation solenoid valve closes, ensuring isolation of the hydraulic system from the normal nose landing gear actuation system.

At the same time, emergency solenoid valves open to supply hydraulic pressure from hydraulic system No. 4 to unlock the nose landing gear emergency door lock actuators and shift to emergency drive while simultaneously energizing the electric drive motor. In the event system No. 4 is depressurized, an accumulator, normally used for crew door operation, will supply hydraulic pressure for emergency operation of the nose gear door unlocking actuators.

(2) When the doors are in the open position, the emergency nose gear extension electric motor is energized to extend the nose gear.

(3) After the nose gear is down the nose gear downlock is held to the overcenter position by the spring of the downlock actuator.

Note

Total NLG extension time is approximately 3 minutes.

LANDING GEAR SYSTEM CONTROLS

Landing Gear Lever.

A landing gear lever, located on the pilots' center instrument panel (figure 1-37), controls gear extension and retraction. Placing the lever to "UP" provides 28-volt DC power to operate solenoid valves in the main and nose landing gear systems to start the gear retraction sequence. Placing the landing gear lever to "DN" reverses the sequence to extend the gear. A 28-volt DC solenoid operated locking mechanism prevents movement of the landing gear lever from the "DN" position until the main landing gear struts are fully extended after take off. The circuits controlled by the landing gear lever receive 28-volt DC power from the main DC bus No. 1 (figure 1-68).

Landing Gear Lever Lock Release.

A landing gear lever lock release (figure 1-37), located adjacent to the landing gear lever, can be used to release the locking mechanism after take-off in case of an unlocking circuit failure.

The landing gear lever may be placed to "UP" after lift-off, but the landing gear will not retract until a spin-down signal is generated. This signal may take as long as five seconds to be generated.

Landing Gear Emergency Extend Switches.

Five guarded LANDING GEAR EMERGENCY EXTEND switches, one for each main landing gear and one for the nose landing gear are located on the control pedestal (figure 1-37). Raising a switch guard and moving the switch forward to the "EXTEND" position supplies 28-volt DC power and 115-volt AC power to initiate the emergency extension sequence for the selected landing gear. The circuits controlled by the LANDING GEAR EMERGENCY EXTEND switches receive 28-volt DC power from the main DC buses No. 1 and No. 2 (figure 1-67 and 1-68). Power for operation of the nose gear emergency extend motor and the nose gear emergency door motors is supplied from the 115-volt forward main AC bus No. 2 (figure 1-62). Power for operation of the main landing gear emergency extend motors is supplied from the 115-volt aft main AC buses No. 1, and No. 4 (figure 1-70).

Emergency Electrical Override Door Open Switch.

The EMERG ELEC ORIDE DOOR OPEN switch is a spring-loaded guarded switch located on the NLG relay panel (figure 1-37). Holding the switch to the "DOOR OPEN" position and then placing the NOSE LANDING GEAR EMERGENCY EXTEND switch to "EXTEND" bypasses the door open relays and supplies electrical power directly to the NLG emergency door open motors. The switch controls 28-volt DC power from the main DC bus No. 2 (figure 1-67).

Emergency Electrical Override NLG Extend Switch.

The EMERG ELEC ORIDE NLG EXTEND switch is a guarded switch located on the NLG relay panel (figure 1-37). Holding the switch to the "NLG EXT" position and then placing the NOSE LANDING GEAR EMERGENCY EXTEND switch to "EXTEND" bypasses the door open and gear down relays and supplies power directly to the NLG emergency extend motor. The switch controls 28-volt DC power from the main DC bus No. 2 (figure 1-67).

Wheel Spin-up Detector Test Switches.

Two WHEEL SPIN-UP DETECTOR TEST switches, one for the forward main gears and one for the aft main gears, are located on the copilot's side console (figure 1-37). Each switch has "LH" and "RH" positions and is spring-loaded to the center "OFF" position. Holding either switch to the "LH" or "RH" position will generate a simulated spin-up of a selected wheel on that bogie. The presence of a spin-up signal can be verified by the ability to move the ground spoiler handle from the closed position. To accomplish this, both switches must be moved simultaneously forward or aft. This will interrupt the touchdown signals to the spin-up/touchdown relays and provide spin-up signals from diagonally opposed main landing gears which will maintain the spin-up/touchdown relays in the energized position. This allows movement of the ground spoiler handle due to a spin-up condition only. The SPIN-UP DETECTOR TEST switches receive 28-volt DC power and 26-volt AC power from the isolated DC bus and AC instrument bus respectively (figures 1-64 and 1-66).

Nose Landing Gear Shifter Switch.

A three-position switch is located on the pilots' center instrument panel (figure 1-37). On 00461 and up and airplanes modified by T. O. 1345, the nose landing gear shifter switch is located on the flight engineer's panel (figure 1-40). The switch is springloaded to the "OFF" position from the "HI SHIFT AND TEST" position only. The switch is used to test the NLG door close and door lock circuits, and to shift the NLG shift mechanism to the high speed, low torque position. It is also used to shift the NLG shift mechanism to the low speed, high torque position for kneeling.

The NLG GEAR SHIFT switch is momentarily placed to the "HI SHIFT AND TEST" position, before flight, to test the NLG door closed circuits for a door open condition and the NLG door locked circuits for an unlocked condition and to shift the NLG shift mechanism to the high speed, low torque position. If the test is successful and the NLG shift mechanism shifts properly, the HIGH/RETR light comes on. Shift will not occur unless the NLG is in the downlock position and the KNEEL SELECT switch is in the "OFF" position.

The switch is placed to the "LOW SHIFT" position, prior to kneeling, to shift the NLG shift mechanism to the low speed, high torque position. When shift occurs, the LOW/KNEEL light comes on and remains on. Shift will not occur unless the NLG is in the downlock position and the KNEEL SELECT switch is in the "OFF" position. The switch controls 28-volt DC power from the main DC bus No. 1 (figure 1-68). Placing the switch to "OFF" removes power from the shift mechanism drive motor. The shifter will stay in the last position selected.

The switch controls 28-volt DC power from the main DC bus No. 1 (figure 1-68).

LANDING GEAR SYSTEM INDICATORS.

Landing Gear Position Indicators.

Five landing gear position indicators, one for each main landing gear and one for the nose landing gear, are located on the pilots' center instrument panel above the landing gear lever (figure 1-37).

The nose gear position indicator displays four conditions: up, doors-in-transit, doors-fully-open/gear-not-down, and down-and-locked. The up condition is indicated by the word UP and will be displayed when all nose gear door locks are in the locked position. The doors-in-transit condition is indicated by a black and white barber pole and will be displayed while the nose gear doors are unlocked and not fully open. The doors-fully-open/gear-not-down condition is indicated by a pair of red wheels and will be displayed when the doors are fully open and the nose gear is not down and locked. The down-and-locked condition is indicated by a pair of green wheels and will be displayed when the nose gear is down and the downlock is engaged.

The main gear position indicators each display four conditions: the word UP will be displayed when the gear is up and both gear door lock cylinders are in the locked position; the black and white barber pole will be displayed when the gear is in transit from the up or down position; a pair of red wheels shown at 90 degrees from the line-of-flight will be displayed when the gear is down, the side brace is in the locked position, and the crosswind positioning collar is disengaged; a pair of green wheels aligned with line-of-flight will be displayed when the gear down-and-locked conditions are met and the crosswind positioning collar is engaged.

Power for operation of the landing gear position indicators is supplied by the 28-volt isolated DC bus (figure 1-64).

Bogie Pitch Annunciator Lights.

Four BOGIE PITCH annunciators, one for each main gear bogie, are located on the pilots' annunciator panel (figure 1-128). An annunciator comes on when the associated bogie is in a pitch position greater than 15 degrees nose down or 11 degrees nose up and the side braces are locked.

Emergency Switch On Light.

An EMERG SW ON light (figure 1-37) is located to the left of the LANDING GEAR EMERGENCY EXTEND switches.

The EMERG SW ON light will come on when the NLG emergency extend switch is placed to "EXTEND" and the first NLG door reaches the fully opened position. The light will remain on until the switch is returned to NORMAL.

The light will come on when any of the MLG emergency extend switches are placed to "EXTEND" and the affected MLG is down and locked.

The EMERG SW ON light may also come on, with the NLG up and locked, to warn that an erroneous nose gear door open signal exists which could cause structural damage if the EMERGENCY EXTEND switch were to be operated.

The light receives 28-volt DC power from the main DC bus No. 1 (figure 1-68).

Landing Gear Warning Light.

A red landing gear warning light is installed in the knob of the landing gear lever. The light will come on under any of the following conditions:

(1) The landing gear lever is "UP" and any of the nose or main gear door locks are not in the locked position.

(2) The landing gear lever is "DN" and the NLG is not in the down-and-locked position, or any of the main landing gear crosswind positioning collars are not engaged.

Nose Landing Gear Fiber Optic Scope.

The fiber optic scope is located in the cargo compartment, in a stowage receptacle just aft of the crew entrance door (figure 3-12). The fiber optic scope is used to visually check that the nose landing gear is down and locked. Before the scope can be used, the nose landing gear inspection lights must be turned on with the NLG INSP flood lights switch located on the LH FORWARD LOADMASTER CONTROL panel (figure 1-122). A placard, located adjacent to the scope, shows the view that is seen in the scope when the nose landing gear is down and locked.

Nose Landing Gear Shifter Position Indicator Lights.

Two gear shift position indicator lights are located on the NLG GEAR SHIFT panel (figure 1-37). The HIGH/RETRACT light is on when the gearbox is in the high speed, low torque mode and the NLG gear shift switch is held in the "HIGH SHIFT and TEST" position.

When the NLG gear shift switch is placed to the "LOW SHIFT" position, the LOW/KNEEL light comes on and remains on when the shifter has shifted to the low speed, high torque position.

The indicator lights receive 28-volt DC power from the main DC bus No. 1 (figure 1-68).

Nose Landing Gear Shifter Position Indicator.

A nose landing gear shifter position indicator is installed on the NLG gearbox. The indicator consists of a spring-loaded plunger housed in a plug in the gearbox body and is visible on the right side of the gearbox directly opposite the shifter motor inside the NLG wheel well. When the gearbox is in the high speed, low torque position, the end of the plunger is extended approximately 1/16 inch from the face of the plug. When the gearbox is not in the high speed, low torque position, the end of the plunger is flush with or below the face of the plug.

Landing Gear Sequence Control Lights.

Three landing gear sequence control panels are installed in the cargo compartment (figure 1-37). One panel controls the nose landing gear, one controls the right-hand main landing gear, and one controls the left-hand main landing gear. Time delay relays, sequence lights, control relays and proximity switch cards are mounted on each control panel. The sequence control lights consist of a series of green and blue lights which are displayed in a sequential flow pattern for each gear operation.

A test switch is located at the bottom of each panel to provide a means to check the bulbs of the blue lights. The bulbs of the green lights are checked by the push-to-test method. The push-to-test feature of the blue lights is utilized for system malfunction analysis.

The green lights, when on, indicate gear handle position or power to a solenoid valve. The blue lights, when on, indicate an energized relay which is used to supply power to a solenoid valve. After the completion of a gear cycle, those lights that remain on indicate that part of the circuit that is still powered. All blue lights are identified by a number. These numbers correspond to a sequence control relay and, if applicable, a proximity switch card.

Landing Gear Warning Horn.

A landing gear warning horn, located in the flight station, will sound to indicate an unsafe gear condition under any of the following conditions:

(1) When the flaps are extended beyond approximately 80 percent and the nose gear is not down and locked or any of the main gear crosswind positioning collars are not engaged.

(2) When airspeed is less than 200 KCAS and all of the following conditions exist:

(a) The ADS switch is in the "SAFE" position.

(b) Any throttle is below a minimum cruise power setting.

(c) The nose gear is not down and locked or any main gear crosswind positioning collar lock is not engaged.

The landing gear warning horn will also sound when pre-established clearance criteria are not met during TF/TA operation.

Note

When the airplane is in a forward or level kneeling mode, the landing gear warning light will be on, but power to the warning horn will be interrupted by the touchdown relay.

A HORN SILENCE button, located on the landing gear control panel, may be used to silence the landing gear warning horn only if the horn sounded as a result of the previously described condition (2). The landing gear warning horn and light receive 28-volt DC power from the isolated DC bus (figure 1-64).

Landing Gear Warning Test Button.

A test button marked WARN LIGHT & HORN TEST is located adjacent to the landing gear lever (figure 1-37). Depressing the button will cause the landing gear warning light to come on and the warning horn to sound.

Inflight Troubleshooting of Landing Gear Extension And Retraction System.

Note

Before beginning this procedure, verify that all landing gear control circuit breakers are closed and that the solenoid pilot valve electrical connectors are connected. Slow the airplane to 200 KCAS maximum.

15-83

A relay logic control system provides the capability of inflight troubleshooting if an electrical malfunction occurs. Operational conditions permitting, these procedures may be used and will detect failed relays and switch cards on the landing gear sequence control panels (figure 1-37), with guidance to isolate and replace these components in flight. If a malfunction occurs in flight and it is determined that these procedures are to be used, leave the landing gear in its existing position and refer to the Landing Gear Inflight Troubleshooting Procedures Index.

To locate the applicable troubleshooting index, refer to the operational phase (retraction, extension, or gear-up) during which the malfunction occurred. Find the malfunction and affected landing gear in the first two columns and read the item number to the right. Refer to the troubleshooting table identified by this item number.

Note

All indicator lights mentioned in the ISOLATION PROCEDURE column of the troubleshooting tables are on the applicable MLG or NLG sequence control panels in the cargo compartment (figure 1-37).

If a landing gear malfunction occurs, proceed as follows:

a. Test the lamps (test blue, numbered lights with test switch; test green, unnumbered lights by pressing the light) to ensure that the lamps are serviceable.

b. Record the landing gear sequence control panel lights that are on when the gear is in the malfunctioned position.

c. Refer to troubleshooting table and perform outlined procedures.

CAUTION

Unless otherwise directed by the troubleshooting table, do not remove or replace affected components until steps d, e, and f have been accomplished.

d. Open all unaffected landing gear CONTROL circuit breakers (Flight Engineer's Circuit Breaker Panel No. 6), EMERGENCY EXTEND circuit breakers (Flight Engineer's Circuit Breaker Panel No. 5 or AC Load Center).

e. Place the landing gear lever down, unless otherwise directed by the troubleshooting table.

f. Open the landing gear CONTROL and EMERGENCY EXTEND circuit breakers for the malfunctioning gear and the LANDING GEAR POS IND circuit breaker (Flight Engineer's Circuit Breaker Panel No. 2).

g. Replace the relay or switch card listed in the troubleshooting table. If the REMEDY column in the troubleshooting step requires replacement of more than one relay or switch card, replace the first one listed in sequence.

Note

When replacing relays or switch cards in sequence, if the replaced relay or switch card does not correct the condition, assume the removed one to be good and use it for the next replacement.

h. Close the landing gear CONTROL and EMERGENCY EXTEND circuit breakers for the malfunctioning gear and the LANDING GEAR IND circuit breaker.

i. Cycle the landing gear as required to verify that the observed malfunction has been corrected.

Repeat steps e through i for any subsequent relay or switch card listed, in the sequence shown, until either the malfunction is corrected or all the listed items have been replaced. If another malfunction occurs, again refer to the appropriate troubleshooting table and perform the outlined procedures. The same-numbered relay or switch card should be replaced one time only.

Note

If the malfunction is not corrected after replacing the components required by these procedures, accomplish the applicable alternate/emergency procedure and make an appropriate entry in Form 781. If mission requirements dictate, the flight may be completed with the malfunctioning gear extended and its CONTROL and EMERGENCY EXTEND circuit breakers open and the landing gear lever up.

If the malfunction was corrected, a Form 781 entry will be made specifying the components used. Retain any failed components, but do not install them in the spare component receptacles.

j. Close the circuit breakers opened in step d.

Note

If an MLG circuit breaker has been opened, accomplish the Brake System Check (Inflight) in Section III after extending the gear for landing.

LANDING GEAR INFLIGHT TROUBLESHOOTING PROCEDURES INDEX.

RETRACTION MALFUNCTIONS.

MALFUNCTION	GEAR	REFER TO ITEM NO. ⚠1	REFER TO ITEM NO. ⚠2
Indicator remains in green wheels position with gear at zero degrees.	Fwd MLG	1	2
	Aft MLG	3	4
Indicator stops in red wheels position (collar unlocked).	Fwd MLG	5	5
	Aft MLG	6	6
Indicator shows in-transit position with door closed.	Fwd MLG	7	8
	Aft MLG	9	10
Indicator remains in green wheels position.	NLG	11	11
Indicator stops in red wheels position.	NLG	12	12
Indicator stops in in-transit position	NLG	13	14

⚠1 On 68307, 70167, 70168, 70170 thru 00453 not modified by T.O. 1271.

⚠2 On 00454 and up and airplanes modified by T.O. 1271.

EXTENSION MALFUNCTIONS (NORMAL MODE).

MALFUNCTION	GEAR	REFER TO ITEM NO.
Indicator remains in UP position with door closed.	Fwd or Aft MLG	15
MLG goes to down-and-locked position but fails to rotate (indicates in-transit or red wheels).	Fwd MLG	16
	Aft MLG	17
MLG rotates to zero degrees but does not indicate green wheels (remains in red wheels or goes to in-transit position).	Fwd MLG	18
	Aft MLG	19
Indicator remains in UP position.	NLG	20
Indicator stops in in-transit position.	NLG	21
Indicator stops in red wheels position.	NLG	22

GEAR-UP MALFUNCTIONS.

MALFUNCTION	GEAR	REFER TO ITEM NO.	
		⚠1	⚠2
BOGIE PITCH light on with gear in up position	Fwd or Aft MLG	23	23
EMERG SW ON light comes on with NLG indicating UP.	NLG	24	24
Gear Indicator indicates in-transit	Fwd MLG	7	8
	Aft MLG	9	10
	NLG	13	14

⚠1 On 68307, 70167, 70168, 70170 thru 00453 not modified by T.O. 1271.

⚠2 On 99454 and up and airplanes modified by T.O. 1271.

TROUBLESHOOTING TABLES - MLG RETRACTION MALFUNCTIONS.

ISOLATION PROCEDURES		REMEDY
ITEM 1. (MLG)	ONE FWD INDICATOR REMAINS IN GREEN WHEELS POSITION WITH GEAR AT ZERO DEGREES (ON 68307, 70167, 70168, 70170 THRU 00453 NOT MODIFIED BY T.O. 1271).	
Step 1. Is the UP ROTATE SOL light on?	YES	Refer to Alternate Main Landing Gear Retraction Procedure in this section and make appropriate entry on Form 781.
	NO	Proceed to next step.

ISOLATION PROCEDURES		REMEDY
ITEM 1. (CONT)	ONE FWD INDICATOR REMAINS IN GREEN WHEELS POSITION WITH GEAR AT ZERO DEGREES (ON 68307, 70167, 70168, 70170 THRU 00453 NOT MODIFIED BY T.O. 1271).	
Step 2. Is the GEAR HDL UP light on?	YES	Proceed to next step.
	NO	Refer to Alternate Main Landing Gear Retraction Procedure in this section and make appropriate entry on Form 781.
Step 3. Are both lights No. 8F and 11F (FWD and AFT DR LOCK) off? Operate blue lights test switch to test lamps.	YES	Proceed to next step.
	NO	Proceed to step 6.
Step 4. Is light No. 3F (CTR TD) on?	YES	Proceed to next step
	NO	Proceed to step 10.
Step 5. Is light No. 2F (GEAR HDL UP UNLOCK) on?	YES	Replace relays No. 2F, 7F, 11F, 8F, and 3F in sequence.
	NO	Proceed to step 13.
Step 6. Are both lights No. 8F and 11F (FWD and AFT DR LOCK) on?	YES	Proceed to next step.
	NO	Refer to Alternate Main Landing Gear Retraction Procedure in this section and make appropriate entry on Form 781.
Step 7. Is light No. 7F (FWD DR CL) on?	YES	Proceed to next step.
	NO	Proceed to step 9.
Step 8. Press light No. 7F. Did it remain on?	YES	Replace switch card No. 7F.
	NO	Replace relay No. 7F.
Step 9. Is DOOR LOCK SOL light on?	YES	Replace relay No. 7F.
	NO	Refer to Alternate Main Landing Gear Retraction Procedure in this section and make appropriate entry on Form 781.
Step 10. Press light No. 3F. Did it come on? (On indicates that CENTER relay 1F is closed.)	YES	Replace relay No. 3F.
	NO	Proceed to next step.
Step 11. Is light No. 1F (CTR) on?	YES	Replace relay No. 1F.
	NO	Proceed to next step.
Step 12. Press light No. 1F. Did it come on?	YES	Replace relay No. 1F.
	NO	Replace switch card No. 1F.
Step 13. Press light No. 2F. Did it come on?	YES	Replace relay No. 2F.
	NO	Replace relay No. 8F.

ISOLATION PROCEDURES		REMEDY
ITEM 2. (MLG)	ONE FWD INDICATOR REMAINS IN GREEN WHEELS POSITION WITH GEAR AT ZERO DEGREES (ON 00454 AND UP AND AIRPLANES MODIFIED BY T.O. 1271).	
Step 1. Is the UP ROTATE SOL light on?	YES	Refer to Alternate Main Landing Gear Retraction Procedure in this section and make appropriate entry on Form 781.
	NO	Proceed to next step.
Step 2. Is the GEAR HDL UP light on?	YES	Proceed to next step.
	NO	Refer to Alternate Main Landing Gear Retraction Procedure in this section and make appropriate entry on Form 781.
Step 3. Are both lights No. 7F and 10F (FWD and AFT DR CL) off? Operate blue lights test switch to test lamps.	YES	Proceed to next step.
	NO	Proceed to step 7.
Step 4. Are both lights No. 8F and 11F (FWD and AFT DR LOCK) off? Operate blue lights test switch to test lamps.	YES	Proceed to next step.
	NO	Refer to Alternate Main Landing Gear Retraction Procedure in this section and make appropriate entry on Form 781.
Step 5. Is light No. 3F (CTR TD) on?	YES	Proceed to next step.
	NO	Proceed to step 8.
Step 6. Is light No. 2F (GEAR HDL UP UNLOCK) on?	YES	Replace relays No. 2F, 7F, 10F, 8F, 11F, and 3F in sequence.
	NO	Proceed to step 11.
Step 7. Press the light which is on (7F or 10F). Did it remain on?	YES	Replace the affected (7F or 10F) switch card.
	NO	Replace the affected (7F or 10F) relay.
Step 8. Press light No. 3F. Did it come on? (On indicates that CENTER relay 1F is closed.)	YES	Replace relay No. 3F.
	NO	Proceed to next step.
Step 9. Is light No. 1F (CTR) on?	YES	Replace relay No. 1F.
	NO	Proceed to next step.
Step 10. Press light No. 1F. Did it come on?	YES	Replace relay No. 1F.
	NO	Replace switch card No. 1F.
Step 11. Press light No. 2F. Did it come on?	YES	Replace relay No. 2F.
	NO	Replace relay No. 8F.

ISOLATION PROCEDURES		REMEDY
ITEM 3. (MLG)	ONE AFT INDICATOR REMAINS IN GREEN WHEELS POSITION WITH GEAR AT ZERO DEGREES (ON 68307, 70167, 70168, 70170 THRU 00453 NOT MODIFIED BY T.O. 1271).	
Step 1. Is the UP ROTATE SOL light on?	YES	Refer to Alternate Main Landing Gear Retraction Procedure in this section and make appropriate entry on Form 781.
	NO	Proceed to next step.
Step 2. Is the GEAR HDL UP light on?	YES	Proceed to next step.
	NO	Refer to Alternate Main Landing Gear Retraction Procedure in this section and make appropriate entry on Form 781.
Step 3. Are both lights No. 9A and 12A (FWD and AFT DR LOCK) off? Operate blue lights test switch to test lamps?	YES	Proceed to next step.
	NO	Proceed to step 6.
Step 4. Is light No. 4A (CTR TD) on?	YES	Proceed to next step.
	NO	Proceed to step 10.
Step 5. Is light No. 3A (GEAR HDL UP UNLOCK) on?	YES	Replace relays No. 3A, 8A, 12A, 9A, and 4A in sequence.
	NO	Proceed to step 13.
Step 6. Are both lights No. 9A and 12A (FWD and AFT DR LOCK) on?	YES	Proceed to next step.
	NO	Refer to Alternate Main Landing Gear Retraction Procedure in this section and make appropriate entry on Form 781.
Step 7. Is light No. 8A (FWD DR CL) on?	YES	Proceed to next step.
	NO	Proceed to step 9.
Step 8. Press light No. 8A. Did it remain on?	YES	Replace switch card No. 8A.
	NO	Replace relay No. 8A.
Step 9. Is DR LOCK SOL light on?	YES	Replace relay No. 8A.
	NO	Refer to Alternate Main Landing Gear Retraction Procedure in this section and make appropriate entry on Form 781.
Step 10. Press light No. 4A. Did it come on? (On indicates that CENTER relay 1F is closed.)	YES	Replace relay No. 4A.
	NO	Proceed to next step.
Step 11. Is light No. 2A (CTR) on?	YES	Replace relay No. 2A.
	NO	Proceed to next step.

ISOLATION PROCEDURES			REMEDY
ITEM 3. (CONT)	ONE AFT INDICATOR REMAINS IN GREEN WHEELS POSITION WITH GEAR AT ZERO DEGREES (ON 68307, 70167, 70168, 70170 THRU 00453 NOT MODIFIED BY T.O. 1271).		
Step 12.	Press light No. 2A. Did it come on?	YES	Replace relay No. 2A.
		NO	Replace switch card No. 2A.
Step 13.	Press light No. 3A (GEAR HDL UP UNLOCK). Did it come on?	YES	Replace relay No. 3A.
		NO	Replace relay No. 9A.

ISOLATION PROCEDURES			REMEDY
ITEM 4. (MLG)	ONE AFT INDICATOR REMAINS IN GREEN WHEELS POSITION WITH GEAR AT ZERO DEGREES (ON 00454 AND UP AND AIRPLANES MODIFIED BY T.O. 1271).		
Step 1.	Is the UP ROTATE SOL light on?	YES	Refer to Alternate Main Landing Gear Retraction Procedure in this section and make appropriate entry on Form 781.
		NO	Proceed to next step.
Step 2.	Is the GEAR HDL UP light on?	YES	Proceed to next step.
		NO	Refer to Alternate Main Landing Gear Retraction Procedure in this section and make appropriate entry on Form 781.
Step 3.	Are both lights No. 8A and 11A (FWD and AFT DR CL) off?	YES	Proceed to next step.
		NO	Proceed to step 7.
Step 4.	Are both lights No. 9A and 12A (FWD and AFT DR LOCK) off?	YES	Proceed to next step.
		NO	Refer to Alternate Main Landing Gear Retraction Procedure in this section and make appropriate entry on Form 781.
Step 5.	Is light No. 4A (CTR TD) on?	YES	Proceed to next step.
		NO	Proceed to step 8.
Step 6.	Is light No. 3A (GEAR HDL UP UNLOCK) on?	YES	Replace relays No. 3A, 8A, 11A, 9A, 12A, and 4A in sequence.
		NO	Proceed to step 11.
Step 7.	Press the light which is on (8A or 11A). Did it remain on?	YES	Replace the affected switch card (8A or 11A).
		NO	Replace the affected relay (8A or 11A).

ISOLATION PROCEDURES		REMEDY
ITEM 4. (CONT)	ONE AFT INDICATOR REMAINS IN GREEN WHEELS POSITION WITH GEAR AT ZERO DEGREES (ON 00454 AND UP AND AIRPLANES MODIFIED BY T.O. 1271).	
Step 8. Press light No. 4A. Did it come on? (On indicates that CENTER relay No. 2A is closed.)	YES	Replace relay No. 4A.
	NO	Proceed to next step.
Step 9. Is light No. 2A (CTR) on?	YES	Replace relay No. 2A.
	NO	Proceed to next step.
Step 10. Press light No. 2A. Did it come on?	YES	Replace relay No. 2A.
	NO	Replace switch card No. 2A.
Step 11. Press light No. 3A. Did it come on?	YES	Replace relay No. 3A.
	NO	Replace relay No. 9A.

ISOLATION PROCEDURES		REMEDY
ITEM 5. (MLG)	ONE FWD INDICATOR STOPS IN RED WHEELS POSITION (COLLAR UNLOCKED).	
Step 1. Is UP SOL light on?	YES	Extend gear to green wheels. Refer to Alternate Main Landing Gear Retraction Procedures in this section and make appropriate entry on Form 781.
	NO	Proceed to next step.
Step 2. Is light No. 6F (90° POS) on?	YES	Replace relays No. 2F and 6F in sequence.
	NO	Proceed to next step.
Step 3. Press light No. 6F. Did it come on?	YES	Replace relay No. 6F.
	NO	Proceed to next step.
Step 4. Momentarily depress the EMERG SYSTEM ISOLATION valve on the Main Landing Gear Emergency Hydraulic Manifold. Did the gear complete its retraction?	YES	Make entry on Form 781 calling for replacement of selector valve, E-DCO-4, in emergency manifold.
	NO	Extend gear to green wheels. Make no further attempt to retract gear. Make appropriate entry on Form 781.

ISOLATION PROCEDURES			REMEDY
ITEM 6. (MLG)	ONE AFT INDICATOR STOPS IN RED WHEELS POSITION (COLLAR UNLOCKED).		
Step 1. Is UP SOL light on?		YES	Extend gear to green wheels. Refer to Alternate Main Landing Gear Retraction Procedures in this section and make appropriate entry on Form 781.
		NO	Proceed to next step.
Step 2. Is light No. 7A (90° POS) on?		YES	Replace relays No. 3A and 7A in sequence.
		NO	Proceed to next step.
Step 3. Press light No. 7A. Did it come on?		YES	Replace relay No. 7A.
		NO	Proceed to next step.
Step 4. Momentarily depress the EMERG SYSTEM ISOLATION valve on the Main Landing Gear Emergency Hydraulic Manifold. Did the gear complete its retraction.		YES	Make entry on Form 781 calling for replacement of selector valve, E-DCO-4, in emergency manifold.
		NO	Extend gear to green wheels. Make no further attempt to retract gear. Make appropriate entry on Form 781.

ISOLATION PROCEDURES			REMEDY
ITEM 7. (MLG)	ONE FWD INDICATOR SHOWS IN-TRANSIT POSITION WITH DOOR CLOSED (ON 68307, 70167, 70168, 70170 THRU 00453 NOT MODIFIED BY T.O. 1271).		
Step 1. Remove wheel well inspection cover and observe position of the outboard MLG door. Is door fully closed?		YES	Proceed to next step.
		NO	Extend gear to green wheels. Make no further attempt to retract gear. Make appropriate entry on Form 781.
Step 2. Are both lights No. 8F and 11F (FWD and AFT DR LOCK) on?		YES	Replace relays No. 7F, 11F, and 8F in sequence.
		NO	Proceed to next step.
Step 3. Is either light No. 8F or 11F (FWD or AFT DR LOCK) on?		YES	Proceed to next step.
		NO	Proceed to step 7.
Step 4. Is light No. 8F (FWD DR LOCK) on? (Light No. 11F (AFT DR LOCK) off)		YES	Proceed to next step.
		NO	Proceed to step 6.
Step 5. Press light No. 11F. Did it come on?		YES	Replace relay No. 11F.
		NO	Make appropriate entry on Form 781.

ISOLATION PROCEDURES			REMEDY
ITEM 7. (CONT)	ONE FWD INDICATOR SHOWS IN-TRANSIT POSITION WITH DOOR CLOSED (ON 68307, 70167, 70168, 70170 THRU 00453 NOT MODIFIED BY T.O. 1271).		
Step 6. Press light No. 8F. Did it come on?		YES	Replace relay No. 8F.
		NO	Make appropriate entry on Form 781.
Step 7. Is DOOR LOCK SOL light on?		YES	Make appropriate entry on Form 781.
		NO	Proceed to next step.
Step 8. Is light No. 7F (FWD DR CL) on?		YES	Replace relay No. 7F.
		NO	Proceed to next step.
Step 9. Press light No. 7F. Did it come on?		YES	Replace relay No. 7F.
		NO	Replace switch card No. 7F.

ISOLATION PROCEDURES			REMEDY
ITEM 8. (MLG)	ONE FWD INDICATOR SHOWS IN-TRANSIT POSITION WITH DOOR CLOSED (ON 00454 AND UP AND AIRPLANES MODIFIED BY T.O. 1271).		
Step 1. Remove wheel well inspection cover and observe position of the outboard MLG door. Is the door fully closed?		YES	Proceed to next step.
		NO	Extend gear to green wheels. Make no further attempt to retract gear. Make appropriate entry on Form 781.
Step 2. Are both lights No. 8F and 11F (FWD and AFT DR LOCK) on?		YES	Replace relays No. 7F, 10F, 11F, and 8F in sequence.
		NO	Proceed to next step.
Step 3. Is either light No. 8F or 11F (FWD or AFT DR LOCK) on?		YES	Proceed to next step.
		NO	Proceed to step 7.
Step 4. Is light No. 8F (FWD DR LOCK) on? (Light No. 11F (AFT DR LOCK) off)		YES	Proceed to next step.
		NO	Proceed to step 6.
Step 5. Press light No. 11F. Did it come on?		YES	Replace relay No. 11F.
		NO	Make appropriate entry on Form 781.
Step 6. Press light No. 8F, Did it come on?		YES	Replace relay No. 8F.
		NO	Make appropriate entry on Form 781.

ISOLATION PROCEDURES			REMEDY
ITEM 8. (CONT)	ONE FWD INDICATOR SHOWS IN-TRANSIT POSITION WITH DOOR CLOSED (ON 00454 AND UP AND AIRPLANES MODIFIED BY T.O. 1271).		
Step 7. Is DOOR LOCK SOL light on?		YES	Depress the LG DOOR UPLOCK LOCKED button on the MLG Door Uplock manifold to obtain UP indication. Make appropriate entry on Form 781.
		NO	Proceed to next step.
Step 8. Is light No. 7F (FWD DR CL) on?		YES	Proceed to step 10.
		NO	Proceed to next step.
Step 9. Press light No. 7F. Did it come on?		YES	Replace relay No. 7F.
		NO	Replace switch card No. 7F.
Step 10. Is light No. 10F (AFT DR CL) on?		YES	Replace relays No. 7F and 10F in sequence.
		NO	Proceed to next step
Step 11. Press light No. 10F. Did it come on?		YES	Replace relay No. 10F.
		NO	Replace switch card No. 10F.

ISOLATION PROCEDURES			REMEDY
ITEM 9. (MLG)	ONE AFT INDICATOR SHOWS IN-TRANSIT POSITION WITH DOOR CLOSED (ON 68307, 70167, 70168, 70170 THRU 00453 NOT MODIFIED BY T.O. 1271).		
Step 1. Remove wheel well inspection cover and observe position of the outboard MLG door. Is door fully closed?		YES	Proceed to next step.
		NO	Extend gear to green wheels. Make no further attempt to retract gear. Make appropriate entry on Form 781.
Step 2. Are both lights No. 9A and 12A (FWD and AFT DR LOCK) on?		YES	Replace relays No. 8A, 12A, and 9A in sequence.
		NO	Proceed to next step.
Step 3. Is either light No. 9A or 12A (FWD or AFT DR LOCK) on?		YES	Proceed to next step.
		NO	Proceed to step 7.
Step 4. Is light No. 9A (FWD DR LOCK) on? (Light No. 12A (AFT DR LOCK) off)		YES	Proceed to next step.
		NO	Proceed to step 6.
Step 5. Press light No. 12A. Did it come on?		YES	Replace relay No. 12A.
		NO	Make appropriate entry on Form 781.

ISOLATION PROCEDURES			REMEDY
ITEM 9. (CONT)	ONE AFT INDICATOR SHOWS IN-TRANSIT POSITION WITH DOOR CLOSED (ON 68307, 70167, 70168, 70170 THRU 00453 NOT MODIFIED BY T.O. 1271).		
Step 6. Press light No. 9A. Did it come on?		YES	Replace relay No. 9A.
		NO	Make appropriate entry on Form 781.
Step 7. Is DOOR LOCK SOL light on?		YES	Make appropriate entry on Form 781.
		NO	Proceed to next step.
Step 8. Is light No. 8A (FWD DR CL) on?		YES	Replace relay No. 8A.
		NO	Proceed to next step.
Step 9. Press light No. 8A. Did it come on?		YES	Replace relay No. 8A.
		NO	Replace switch card No. 8A.

ISOLATION PROCEDURES			REMEDY
ITEM 10. (MLG)	ONE AFT INDICATOR SHOWS IN-TRANSIT POSITION WITH DOOR CLOSED (ON 00454 AND UP AND AIRPLANES MODIFIED BY T.O. 1271).		
Step 1. Remove wheel well inspection cover and observe position of the outboard MLG door. Is door fully closed?		YES	Proceed to next step.
		NO	Extend gear to green wheels. Make no further attempt to retract gear. Make appropriate entry on Form 781.
Step 2. Are both lights No. 9A and 12A (FWD and AFT DR LOCK) on?		YES	Replace relays No. 8A, 11A, 12A, and 9A in sequence.
		NO	Proceed to next step.
Step 3. Is either light No. 9A or 12A (FWD or AFT DR LOCK) on?		YES	Proceed to next step.
		NO	Proceed to step 7.
Step 4. Is light 9A (FWD DR LOCK) on? (Light 12A (AFT DR LOCK) off)		YES	Proceed to next step.
		NO	Proceed to step 6.
Step 5. Press light No. 12A. Did it come on?		YES	Replace relay No. 12A.
		NO	Make appropriate entry on Form 781.
Step 6. Press light No. 9A. Did it come on?		YES	Replace relay No. 9A.
		NO	Make appropriate entry on Form 781.

15-83

ISOLATION PROCEDURES			REMEDY
ITEM 10. (CONT)	ONE AFT INDICATOR SHOWS IN-TRANSIT POSITION WITH DOOR CLOSED (ON 00454 AND UP AND AIRPLANES MODIFIED BY T.O. 1271).		
Step 7. Is DOOR LOCK SOL light on?		YES	Depress the LG DOOR UPLOCK LOCKED button on the MLG Door Uplock Manifold to obtain UP indication. Make appropriate entry on Form 781.
		NO	Proceed to next step.
Step 8. Is light No. 8A (FWD DR CL) on?		YES	Proceed to step 10.
		NO	Proceed to next step.
Step 9. Press light No. 8A. Did it come on?		YES	Replace relay No. 8A.
		NO	Replace switch card No. 8A.
Step 10. Is light No. 11A (AFT DR CL) on?		YES	Replace relays 8A and 11A in sequence.
		NO	Proceed to next step.
Step 11. Press light No. 11A. Did it come on?		YES	Replace relay No. 11A.
		NO	Replace switch card No. 11A.

TROUBLESHOOTING TABLES - NLG RETRACTION MALFUNCTIONS.

ISOLATION PROCEDURES			REMEDY
ITEM 11. (NLG)	NLG INDICATOR REMAINS IN GREEN WHEELS POSITION.		
Step 1. Is the RETRACT SOL light on?		YES	Make appropriate entry on Form 781.
		NO	Proceed to next step.
Step 2. Is the GEAR HDL UP light on?		YES	Proceed to next step.
		NO	Make appropriate entry on Form 781.
Step 3. Is light No. 6 (CTR) on?		YES	Proceed to next step.
		NO	Assure that gear is centered, using steering. If light remains off, proceed to step 7.
Step 4. Is light No. 7 (UP LOCK) off?		YES	Proceed to next step.
		NO	Proceed to step 8.
Step 5. Is light No. 18 (HIGH SHIFT) off?		YES	Proceed to next step.
		NO	Replace relay No. 18.

ISOLATION PROCEDURES			REMEDY
ITEM 11. (CONT)	NLG INDICATOR REMAINS IN GREEN WHEELS POSITION.		
Step 6. Is the Kneel Select switch in the OFF position?		YES	Make appropriate entry on Form 781.
		NO	Place the switch to OFF. The gear should retract normally.
Step 7. Press light No. 6. Did it come on?		YES	Replace relay No. 6.
		NO	Replace switch card No. 6.
Step 8. Press light No. 7. Did it remain on?		YES	Replace switch card No. 7.
		NO	Replace relay No. 7.

ISOLATION PROCEDURES			REMEDY
ITEM 12. (NLG)	NLG INDICATOR STOPS IN RED WHEELS POSITION.		
Step 1. Is the NLG DOOR CLOSE SOL light on?		YES	Make appropriate entry on Form 781.
		NO	Proceed to next step.
Step 2. Is light No. 7 (UP LOCK) on?		YES	Replace relay No. 7.
		NO	Proceed to next step.
Step 3. Press light No. 7. Did it come on?		YES	Replace relay No. 7.
		NO	Replace switch card No. 7.

ISOLATION PROCEDURES			REMEDY
ITEM 13. (NLG)	NLG INDICATOR STOPS IN IN-TRANSIT POSITION (ON 68307, 70167, 70168, 70170 THRU 00453 NOT MODIFIED BY T.O. 1271).		
Step 1. Are both lights No. 8 and 9 (L FWD And R FWD DOOR CLOSED) on?		YES	Proceed to step 3.
		NO	Proceed to next step.
Step 2. Press the light (No. 8 or 9) which is not on. Did it come on?		YES	Replace relay No. 8 or 9 having the same number as the light which was not on.
		NO	Replace switch card No. 8 or 9 having the same number as the light which was not on.

ISOLATION PROCEDURES			REMEDY
ITEM 13. (CONT)	NLG INDICATOR STOPS IN IN-TRANSIT POSITION (ON 68307, 70167, 70168, 70170 THRU 00453 NOT MODIFIED BY T. O. 1271).		
Step 3. Is the DOOR LOCK SOL light on?		YES	Proceed to next step.
		NO	Replace relays No. 8 and 9 in sequence.
Step 4. Are all DOOR LOCKED lights (No. 10, 11, 22, and 23) on?		YES	Make appropriate entry on Form 781.
		NO	Proceed to next step.
Step 5. Press the DOOR LOCKED light (No. 10, 11, 22, or 23) which in not on. Did it come on?		YES	Replace relay (No. 10, 11, 22, or 23) having the same number as the light which was not on.
		NO	Make appropriate entry on Form 781.

ISOLATION PROCEDURES			REMEDY
ITEM 14. (NLG)	NLG INDICATOR STOPS IN IN-TRANSIT POSITION (ON 00454 AND UP AND AIRPLANES MODIFIED BY T. O. 1271).		
Step 1. Are all DOOR CLOSED lights (No. 8, 9, 20, and 21) on?		YES	Proceed to step 3.
		NO	Proceed to next step.
Step 2. Press the DOOR CLOSED light (No. 8, 9, 20, or 21) which is not on. Did it come on?		YES	Replace the relay (No. 8, 9, 20, or 21) having the same number as the light which was not on.
		NO	Replace the switch card (No. 8, 9, 20, or 21) having the same number as the light which was not on.
Step 3. Is the DOOR LOCK SOL light on?		YES	Proceed to next step.
		NO	Replace relays No. 8, 9, 20, and 21 in sequence.
Step 4. Are all DOOR LOCKED lights (10, 11, 22, and 23) on?		YES	Make appropriate entry on Form 781.
		NO	Proceed to next step.
Step 5. Press the DOOR LOCKED light (No. 10, 11, 22, or 23) which is not on. Did it come on?		YES	Replace the relay No. 10, 11, 22, or 23) having the same number as the light which was not on.
		NO	Make appropriate entry on Form 781.

TROUBLESHOOTING TABLES - MLG EXTENSION MALFUNCTIONS (NORMAL MODE).

ISOLATION PROCEDURES		REMEDY
ITEM 15. (MLG)	INDICATOR REMAINS IN UP POSITION WITH DOOR CLOSED (FWD OR AFT MLG).	
Step 1. Extend the gear in accordance with the Emergency Extension procedure in Section III. Make appropriate entry on Form 781. **Note** The gear down (D-PVA-1) pilot valve receives power directly from the gear lever.		

ISOLATION PROCEDURES		REMEDY
ITEM 16. (MLG)	ONE FWD MLG GOES TO DOWN-AND-LOCKED BUT FAILS TO ROTATE (INDICATES IN-TRANSIT OR RED WHEELS).	
Step 1. Is DOWN ROTATE SOL light on?	YES	Extend the gear in accordance with the Emergency Extension procedure in Section III. Make appropriate entry on Form 781.
	NO	Proceed to next step.
Step 2. Is GEAR HDL DN light on?	YES	Proceed to next step.
	NO	Extend the gear in accordance with the Emergency Extension procedure in Section III. Make appropriate entry on Form 781.
Step 3. Is light No. 5F (DN LOCK) on?	YES	Replace relay No. 5F.
	NO	Proceed to next step.
Step 4. Press light No. 5F. Did it come on?	YES	Replace relay No. 5F.
	NO	Proceed to next step.
Step 5. Remove wheel well inspection cover and observe side brace. Is side brace locked?	YES	Replace switch card No. 5F.
	NO	Extend the gear in accordance with the Emergency Extension procedure in Section III. Make appropriate entry on Form 781.

ISOLATION PROCEDURES		REMEDY
ITEM 17. (MLG)	ONE AFT MLG GOES TO DOWN-AND-LOCKED BUT FAILS TO ROTATE (INDICATES IN-TRANSIT OR RED WHEELS).	
Step 1. Is DOWN ROTATE SOL light on?	YES	Extend the gear in accordance with the Emergency Extension procedure in Section III. Make appropriate entry on Form 781.
	NO	Proceed to next step.
Step 2. Is GEAR HDL DN light on?	YES	Proceed to next step.
	NO	Extend the gear in accordance with the Emergency Extension procedure in Section III. Make appropriate entry on Form 781.
Step 3. Is light No. 6A (DN LOCK) on?	YES	Replace relay No. 6A.
	NO	Proceed to next step.
Step 4. Press light No. 6A. Did it come on?	YES	Replace relay No. 6A.
	NO	Proceed to next step.
Step 5. Remove wheel well inspection cover and observe side brace. Is side brace locked?	YES	Replace switch card No. 6A.
	NO	Extend the gear in accordance with the Emergency Extension procedure in Section III. Make appropriate entry on Form 781.

ISOLATION PROCEDURES		REMEDY
ITEM 18. (MLG)	ONE FWD MLG ROTATES TO ZERO DEGREES BUT DOES NOT INDICATE GREEN WHEELS (REMAINS IN RED WHEELS OR GOES TO IN-TRANSIT).	
Step 1. Is light No. 4F (COLLAR LOCK) on?	YES	Proceed to next step.
	NO	Proceed to step 4.
Step 2. Is light No. 6F (90° POS) off?	YES	Proceed to next step.
	NO	Make appropriate entry on Form 781.
Step 3. Is light No. 5F (DN LOCK) on?	YES	Make appropriate entry on Form 781 or replace relays No. 4F, 5F, and 6F in sequence.
	NO	Proceed to step 5.
Step 4. Press light No. 4F. Did it come on?	YES	Replace relay No. 4F.
	NO	Replace switch card No. 4F.
Step 5. Press light No. 5F. Did it come on?	YES	Replace relay No. 5F.
	NO	Replace switch card No. 5F.

ISOLATION PROCEDURES		REMEDY
ITEM 19. (MLG)	ONE AFT MLG ROTATES TO ZERO DEGREES BUT DOES NOT INDICATE GREEN WHEELS (REMAINS IN RED WHEELS OR GOES TO IN-TRANSIT).	
Step 1. Is light No. 5A (COLLAR LOCK) on?	YES	Proceed to next step.
	NO	Proceed to step 4.
Step 2. Is light No. 7A (90° POS) off? Operate blue lights test switch to test lamp.	YES	Proceed to next step.
	NO	Make appropriate entry on Form 781.
Step 3. Is light No. 6A (DN LOCK) on?	YES	Make appropriate entry on Form 781 or replace relays No. 5A, 6A, and 7A in sequence.
	NO	Proceed to step 5.
Step 4. Press light No. 5A. Did it come on?	YES	Replace relay No. 5A.
	NO	Replace switch card No. 5A.
Step 5. Press light No. 6A. Did it come on?	YES	Replace relay No. 6A.
	NO	Replace switch card No. 6A.

TROUBLESHOOTING TABLES - NLG EXTENSION MALFUNCTIONS.

ISOLATION PROCEDURES		REMEDY
ITEM 20. (NLG)	NLG INDICATOR REMAINS IN UP POSITION WHEN GEAR HANDLE IS PLACED DN.	
Step 1. Extend the NLG in accordance with the Emergency Extension procedures in Section III. Make appropriate entry on Form 781.		
Note The NLG Door Open pilot valve (A-PVA-1) receives power directly from the gear lever.		

ISOLATION PROCEDURES		REMEDY
ITEM 21. (NLG)	NLG INDICATOR STOPS IN IN-TRANSIT POSITION.	
Step 1. Are lights No. 12 and 13 (L and R DOOR OPEN) both off? Operate blue lights test switch to test lamps.	YES	Extend the NLG in accordance with the Emergency Extension procedures in Section III.
	NO	Proceed to next step.
Step 2. Is light No. 12 (L DOOR OPEN) off?	YES	Proceed to step 4.
	NO	Proceed to next step.
Step 3. Press light No. 13. Did it come on?	YES	Replace relay No. 13.
	NO	Replace switch card No. 13.
Step 4. Press light No. 12. Did it come on?	YES	Replace relay No. 21.
	NO	Replace switch card No. 12.

ISOLATION PROCEDURES		REMEDY
ITEM 22. (NLG)	NLG INDICATOR STOPS IN RED WHEELS POSITION.	
Step 1. Visually check the NLG downlock assembly through the NLG fiber optic scope. Is it down-locked?	YES	Proceed to step 3.
	NO	Proceed to next step.
Step 2. Is the DOWN SOL light on?	YES	Extend the NLG in accordance with the Emergency Extension procedures in Section III. Make appropriate entry on Form 781.
	NO	Replace relays No. 12 and 13 in sequence.
Step 3. Is light No. 24 (DN LOCK NO. 2) on?	YES	Replace relay No. 24.
	NO	Proceed to next step.
Step 4. Press light assembly No. 24. Did it come on?	YES	Replace relay No. 24.
	NO	Replace switch card No. 24.

TROUBLESHOOTING TABLES - GEAR-UP MALFUNCTIONS.

ISOLATION PROCEDURES		REMEDY
ITEM 23. (MLG)	BOGIE PITCH LIGHT COMES ON WITH GEAR IN UP POSITION (FWD OR AFT MLG).	
Step 1. Leave the gear in the UP position. Leave all circuit breakers closed. Slow the airplane to less than 200 KCAS. Replace switch card No. 5F (Fwd Gear) or No. 6A (Aft Gear).		
Note If this step does not clear the fault, refer to Bogie Pitch Annunciator Light On with Landing Gear Lever Up procedures in Section III.		

ISOLATION PROCEDURES		REMEDY
ITEM 24. (NLG)	EMERG SW ON LIGHT COMES ON WITH NLG INDICATING UP.	
Note If the EMERG SW ON light, on the control pedestal, comes on when the NLG indicates UP, a door open circuit has failed in the open condition. Proceed as follows to correct the failure.		
Step 1. Is light No. 12 (L DOOR OPEN) on?	YES	Proceed to step 3.
	NO	Proceed to next step.
Step 2. Press light No. 13 (R DOOR OPEN). Did it remain on? (Light No. 13 should have been on prior to this step.)	YES	Replace switch card No. 13.
	NO	Replace relay No. 13.
Step 3. Press light No. 12 (L DOOR OPEN). Did it remain on?	YES	Replace switch card No. 12.
	NO	Replace relay No. 12.
Note If the above procedure fails to turn off the EMERG SW ON light, extend the NLG using the normal gear extension procedure. If the normal system has malfunctioned, extend the NLG with the Emergency Extension procedures in Section III.		

CROSSWIND POSITIONING SYSTEM.

The nose and main landing gears can be rotated into alignment with the runway for take-off and landing whenever the airplane heading must assume a crab angle to compensate for a crosswind. After landing with a crosswind setting, the airplane may be realigned with the runway by rotating the gears to center at a slow rate (approximately 2 degrees per second), while using the nose gear steering wheel to maintain directional control. When the gear lever is placed up, all gears are automatically returned to center prior to the retraction cycle.

Caution See 15-94

Crosswind Positioning System Computer.

A crosswind computer, located on the right side of the cargo compartment at fuselage station 1478, electrically controls crosswind positioning of all gears. The computer receives positioning commands from the flight station controls and transmits signals to all landing gears to position them in one-degree increments up to 18 degrees left or right of center. The gears transmit feedback signals to the computer to complete a closed loop linear servo system. The computer incorporates an asymmetry detection system. If 2 degrees misalignment between any two main gears is detected, the fast gears will stop until the slow gears catch up. When the misalignment reaches 4 degrees, all gear motion stops and the CROSSWIND INOPERATIVE light on the center instrument panel comes on.

Crosswind system components, including the computer, can be tested prior to flight by operating a BITE switch on the computer.

The computer receives 28-volt DC power from the main DC bus No. 2 (figure 1-67) and 115-volt AC power from the forward main AC bus No. 3 (figure 1-65).

Main Gear Crosswind Positioning.

Two linear hydraulic actuators rotate each main gear bogie for crosswind positioning (figure 1-39). These actuators are attached to a crosswind positioning collar which locks to the shock strut orifice support tube during gear extension. The orifice support tube is splined to the shock strut piston so that rotation of the support tube will position the bogie. Pressure is supplied to both actuators from the rotate (gear down) hydraulic line through a manifold containing a normally open by-pass valve and an electro-hydraulic servo valve. Crosswind positioning signals are transmitted to the electro-hydraulic valves to position all four main gears to the same angle. Normally closed shutoff valves block each actuator hydraulic port to lock the gear at the selected crosswind position. The aft main gear positioning system receives pressure from hydraulic system No. 1 and the forward main gear positioning system receives pressure from hydraulic system No. 4.

Nose Gear Crosswind Positioning.

The nose gear steering system is utilized to rotate the nose gear for crosswind positioning. Commands from the crosswind positioning knob are transmitted to an electrically driven linear actuator which in turn positions the steering quadrant through a crosswind and rudder pedal summing linkage. The steering quadrant mechanically positions the nose gear steering hydraulic actuators which rotate the nose gear to the commanded position. Two synchro transducers are provided in the linear actuator. One synchro transmits position signals to a runway symbol on the nose gear steering/crosswind position indicator and the other synchro transmits signals to the crosswind positioning computer to complete the servo loop. The crosswind and rudder pedal summing linkage provides rudder pedal steering about any selected crosswind setting. Nose gear steering wheel inputs will disengage and override both rudder pedal and crosswind inputs to the steering quadrant.

Crosswind Positioning System Controls and Indicators.

CROSSWIND POSITIONING KNOB. The crosswind positioning knob, located on the pilot's center instrument panel (figure 1-37), is used to control the crosswind positioning of the nose and main landing gears. The knob has a scale graduated from 0 to 20 degrees either side of center and is detented at 0 and at each degree mark. Rotating the knob in either direction provides signals through a computer to the nose gear crosswind actuator which rotates the nose gear to the commanded position. The signals also cause the shutoff valves on each main gear actuator to open. Feedback signals from the nose gear crosswind actuator position transmitter are sent through the computer to the electro-hydraulic servo valve at each main gear.

The servo valves control hydraulic flow to the main gear actuators which rotate the gear to the commanded position. Upon reaching the commanded position, both the electro-hydraulic valves and the shutoff valves close, providing a hydraulic block to prevent bogie rotation. To position the gear for a crosswind from the left, the knob is rotated to the left. This will rotate the gear to the right. To position the gear for a crosswind from the right, the knob is rotated to the right. This will rotate the gear to the left. In the event a gear-up command is initiated when the gears are set for a crosswind, the landing gear lever will interrupt a holding mechanism in the crosswind positioning knob assembly. The knob will return to center under a spring load, commanding the gears to center before gear retraction begins.

On 90020 and up and airplanes modified by T.O. 884, the nose and main landing gears rotate at a rate of 2 degrees per second when a crosswind setting is commanded or when the landing gear lever is raised. On 68307, 70167, 70168 and 70170 through 90019 not modified by T.O. 884, the nose and main landing gears rotate at a rate of 4 degrees per second when a crosswind setting is commanded or when the landing gear lever is raised. Crosswind settings are obtained from the crosswind landing gear position chart contained in T.O. 1C-5A-1-1.

MAIN LANDING GEAR BOGIE EMERGENCY POSITIONING SWITCHES. Four main landing gear bogie emergency positioning switches, one for each main gear, are located on the copilot's side console (figure 1-37). The switches are provided to rotate the bogies to the proper position in the event that the normal crosswind positioning system fails. Each switch has positions "LEFT" or "RIGHT" and is spring-loaded to the center "OFF" position. Placing a switch to either "LEFT" or "RIGHT" removes the hydraulic block on the normal crosswind actuator by applying pilot pressure to open the shutoff valves blocking the cylinder ports and to actuate the bypass valve to interconnect all cylinder ports. The bogie emergency actuator will rotate the bogie in the commanded direction until the switch is released or until the rotation limits of the normal crosswind actuators are reached. Hydraulic system No. 1 supplies pressure for forward main gear bogie emergency positioning and hydraulic system No. 4 supplies pressure for aft main gear bogie emergency positioning. The switches receive 28-volt DC power from the main DC bus No. 2 (figure 1-67).

CROSSWIND RESET SWITCH. The X-WIND RESET switch (figure 1-37), is a lever-lock type switch located on the control pedestal. The switch has "NORMAL" and "RESET" positions and is spring-loaded to the "NORMAL" position. The switch is used to activate independently all gear servo systems, enabling them to drive all gears to the commanded position. If, during crosswind positioning, one gear reaches the 4-degree asymmetry limit, gear motion stops, and the CROSSWIND INOPERATIVE light comes on; the switch may be placed to "RESET" to drive all gears to the commanded position and restore normal operation.

Note

Since the CROSSWIND INOPERATIVE light may be an indication of a hardover type of malfunction, it is necessary that caution be exercised in using the switch and that all crosswind indicators be monitored for divergent rotation of a gear. As long as the switch is held in position, no asymmetry protection is provided.

During landing gear extension, the CROSSWIND INOPERATIVE light may remain on after the first main gear indicates green wheels. If this occurs, the X-WIND RESET switch may be placed to "RESET" to reset the circuitry, turn off the CROSSWIND INOPERATIVE light and restore the system to normal operation.

During crosswind positioning, a condition may arise where a 2-degree asymmetry condition will cause gear motion to stop and the CROSSWIND INOPERATIVE light will not come on. Under this condition, placing the switch to "RESET" will release the gear to drive to the commanded position.

CROSSWIND COMPUTER BITE SWITCH. The crosswind computer BITE switch located on the crosswind computer (fuselage station 1478) is used to test the functional and the asymmetry protection circuits to ensure that the system is both operable and safe. Upon placing the BITE switch to "ON", an automatic sequence of 32 fixed time intervals commences and continues for 5 to 20 seconds. During each period a number of tests are conducted. If a failure is detected during the sequence, the testing stops and the BITE indicators display characters which identify and locate the area of malfunction. After the malfunctioning part has been replaced, the BITE test will not continue to the end of the test, but must be restarted by placing the BITE switch to "OFF" and then to "ON". Placing the BITE switch to "ON" causes the CROSSWIND INOPERATIVE light to come on. Placing the BITE switch to "OFF" will cause the CROSSWIND INOPERATIVE light to go off if no malfunction was detected during the BITE test. The BITE system cycles the shutoff valves on all main gears and by-pass valves on the aft gears. As a result the MLG FREE lights cycle on and off during the test.

BITE POWERBACK TEST SELECT SWITCH. A two-position TEST SELECT switch (figure 1-37), located on the BITE POWERBACK panel in the cargo compartment, is used to select the test signals for the aft landing gear servo valve disconnect continuity checks to the crosswind computer. Placing the TEST SELECT switch to "L" or "R" sets up the test signals for subsequent testing with the BITE POWERBACK switches.

BITE POWERBACK TEST SWITCHES. Two momentary three-position TEST A and B switches (figure 1-37), located on the BITE POWERBACK panel in the cargo compartment, are used to test the dual channel powerback disconnect circuitry. Holding these test switches alternately to their No. "1" and "2" positions with the TEST SELECT switch placed to "L" and then to "R" tests the dual channel circuitry. The switch is spring-loaded to the center "OFF" position.

LEFT AND RIGHT AFT DISCONNECT INDICATOR LIGHTS. The two indicator lights (AFT DISC, LEFT; AFT DISC, RIGHT) (figure 1-37), located on the BITE POWERBACK panel in the cargo compartment are used to indicate whether or not the crosswind positioning system servo valves are electrically connected

to the crosswind system computer. When the lights are on, the servo valves are electrically connected to the computer. When the lights are off, the servo valves are electrically disconnected from the computer.

NOSE GEAR STEERING/CROSSWIND POSITION INDICATOR. Crosswind position of the gear is displayed by a runway symbol on the nose gear steering/crosswind position indicator (figure 1-37). The runway symbol rotates left or right in response to signals from a position transmitter on the nose gear crosswind actuator. The symbol displays the crosswind position of the landing gear on a peripheral scale. A fixed airplane symbol superimposed over the runway symbol indicates the landing position of the airplane with respect to the runway. The actual position of the nose gear is displayed by a pointer at the periphery of the instrument face. The crosswind indicator receives 115-volt AC power from the forward main AC bus No. 3 through a X-WIND POS IND circuit breaker (figure 1-65).

MAIN LANDING GEAR CROSSWIND POSITION INDICATORS. Two main landing gear crosswind position indicators, one for the left gears and one for the right gears, are located on the copilot's side console (figure 1-37), and indicate (within ±2 degrees) the position of the main gear bogies within the 0 to 20 degree positions. Each indicator has two needles, one marked F and the other marked A, representing the forward and aft gears. Each indicator has a scale graduated from 0 to 20 degrees either side of center and 0 to 90 degrees to indicate inboard rotation. Each indicator needle receives position signals from a position transmitter mounted on the respective main landing gear. The bogie position indicators and position transmitters receive 115-volt AC power from the forward main AC bus No. 1 (figure 1-66).

CROSSWIND INOPERATIVE LIGHT. The CROSSWIND INOPERATIVE light, located on the pilots' center instrument panel (figure 1-37), is normally off. During gear extension, the light will come on as the landing gear lever is placed "DN" and will remain on until the first MLG collar is locked. The CROSSWIND INOPERATIVE light will come on to indicate the following malfunctions:

(1) When the crosswind computer is without electric power.

(2) When the BITE switch is in the "BITE" position or the BITE system indicates an LRU failure.

(3) When asymmetry is detected between the main gears.

(4) When a circuit has failed.

CROSSWIND COMPUTER BITE DISPLAY INDICATORS. Two crosswind computer BITE display indicators, located above the BITE switch on the crosswind computer (fuselage station 1478) are used to monitor the test. Both indicators display HOLD while the test is in progress. If the test is successfully completed, the words HOLD will change to GO. If there is a fault in the system, the top indicator will display CMPR (computer), CONT (control), LVDT (linear voltage displacement transducer), ACTR (actuator), EHV (electro-hydraulic valve) or MLG (main landing gear) to indicate the failed replaceable unit. and the bottom indicator will display a number 1 through 8 to indicate the location of the failed unit.

GROUND STEERING SYSTEM.

The ground steering system is comprised of two functionally separate systems: the nose gear steering system and an aft main gear castering system which may be used to facilitate turning the airplane in a short radius.

Nose Gear Steering System.

The nose gear can receive commands from the nose gear steering wheel and from the rudder pedals. The steering wheel, on the pilot's side console, is the primary steering command. This command overrides any other input and will steer the nose gear 60 degrees either side of center. The ratio of steering wheel rotation to nose gear rotation is 9.6 to 1. Rudder pedal steering, normally used during the take-off roll, will steer the gear 5 degrees either side of the crosswind position setting.

Steering power is supplied from two hydraulic actuators operating in parallel. These actuators receive hydraulic fluid through a steering servo valve which is positioned by cables connected to a steering quadrant located under the pilots' floor. Steering pressure is normally supplied from hydraulic system No. 1.

The nose gear steering wheel is connected directly to the steering quadrant through a chain and sprocket. The rudder pedals are connected to the steering quadrant through a summing linkage (inputs from both rudder pedals and crosswind actuator). The crosswind setting is the neutral point for rudder pedal steering. This summing linkage is connected to the quadrant by a hydraulically actuated roller which engages a cam to provide an anchor point for the linkage. This actuator is supplied from system No. 1 only. Rudder pedal steering is engaged except when nose gear steering is applied.

The time delay when transitioning from nose gear steering wheel to rudder pedal steering is approximately 3 seconds.

Nose Gear Emergency Steering System.

If hydraulic pressure is not available from system No. 1, system No. 4 pressure may be selected by the

nose gear steering hydraulic selector switch operating a valve upstream of the steering servo valve. If neither system pressure is available, the nose gear will caster and the airplane may be steered by asymmetrical thrust and differential braking. Rudder pedal steering is powered only by system No. 1.

Nose Gear Steering System Controls and Indicators.

NOSE GEAR STEERING WHEEL. The primary steering command is by the nose gear steering wheel on the pilot's side console. The steering wheel can be used to steer the nose gear 60 degrees either side of center. Steering wheel inputs override any other steering input.

RUDDER PEDAL STEERING. The secondary steering command is controlled by rudder pedal steering which provides 5 degrees nose gear steering either side of center for full rudder pedal travel.

NOSE GEAR STEERING HYDRAULIC SELECTOR SWITCH. The nose gear steering hydraulic selector switch, located on the pilots' center instrument panel (figure 1-37), is provided to select either No. 1 ("NORM") or No. 4 ("EMER") hydraulic system for nose gear steering operation. In the "NORM" position, the solenoid-operated steering system hydraulic selector valve is deenergized, allowing No. 1 hydraulic system pressure to operate the nose gear steering system. In the "EMER" position, the selector valve is energized, directing No. 4 hydraulic system pressure through a shuttle valve to the nose gear steering system. When the landing gear lever is in the "UP" position, power to the selector valve is interrupted. The nose gear hydraulic selector switch and the hydraulic selector valve receive 28-volt DC power from the main DC bus No. 2 (figure 1-67).

NOSE GEAR STEERING/CROSSWIND POSITION INDICATOR. Nose gear position is displayed on the nose gear steering/crosswind position indicator located on the pilot's center instrument panel (figure 1-37). A diamond-shaped marker which moves along the outer edge of the NLG POS scale, indicates in degrees the position of nose gear. The nose gear position indicator receives signals from a nose gear position transmitter mounted on the nose landing gear. The transmitter and indicator receive 115-volt AC power from the forward main AC bus No. 3 (figure 1-65).

Aft Main Gear Castering System.

Both aft main gears may be castered up to 20 degrees either side of center to facilitate turns during taxi. The gears are castered by relieving the hydraulic block which locks the aft crosswind steering actuators. When coming out of a turn, the gears can be powered to their center position.

The aft main gears may not necessarily caster together and no asymmetrical restraints are imposed except the stroke limit of the crosswind actuators. During caster operation, asymmetry monitoring of the aft main gear is removed. However if the CROSSWIND INOPERATIVE light does come on, castering will continue.

Aft Main Gear Castering System Controls and Indicators.

MAIN LANDING GEAR CASTER SWITCH. A guarded main landing gear caster switch (figure 1-37) is located on the control pedestal and has positions "MLG CASTER" and "CENTER." Placing the switch to "MLG CASTER" position provides signals to the crosswind computer to open the bypass and the shutoff valves on both aft main gears thus relieving the hydraulic block and allowing the gears to caster. When the switch is placed to "CENTER," power is removed from the bypass pilot valves, allowing control of the two aft gears to be returned to the crosswind positioning system. The servo loops for the aft gears, activated during caster, remain activated and the shutoff valves remain open, causing the aft gears to drive back to center. Asymmetry protection is provided during centering. If the asymmetry, as detected by linear transducers on each gear, reaches 8 degrees, the gear nearer center will stop driving until the other gear drives to reduce the asymmetry to 5 degrees.

If the CROSSWIND INOPERATIVE light comes on during centering, the servo valve and shutoff valves on both aft gears will close, stopping centering movement. Under this condition, the X-WIND RESET switch may be placed to "RESET" to restore normal centering. Should the gear fail to center when the X-WIND RESET switch is used, the aft main landing gear bogie emergency positioning switches may be placed to "LEFT" or "RIGHT" as required. This action restores a caster condition to the aft main gear through the emergency bogie rotation system and centering will be completed if forward motion is maintained. Force from the emergency bogie rotation actuator may be sufficient to rotate the affected gear(s) toward or to the center position if forward motion is maintained.

The main landing gear caster switch receives 28 volt DC power from the main DC bus No. 2 (figure 1-67).

MLG FREE LIGHTS. A LEFT AFT MLG FREE and a RIGHT AFT MLG FREE indicator light, located on the pilots' center instrument panel (figure 1-37), comes on when the respective landing gear crosswind positioning actuator hydraulic pressure is bypassed and will remain on until the main landing gear caster switch is placed to "CENTER" and the respective gear returns to center. The indicator lights receive 28-volt DC power from the main DC bus No. 2 through a circuit breaker labeled EMERG X WIND POS. (figure 1-67).

LANDING GEAR PNEUMATIC KNEELING SYSTEM.

On 68304, 68307, 70167, 70168 and 70170 thru 00460 not modified by T.O. 1345, provisions are made in the main and nose landing gear to lower the airplane from the static ground position to accommodate cargo loading. The cargo floor may be lowered in the level position, or tilted nose down or tail down.

Main Landing Gear Kneeling System.

Each main landing gear shock strut assembly is designed so that it can move vertically through a yoke attached to the airframe. A crosshead assembly, carrying the crosswind and rotation actuators, is formed integrally with the top of the shock strut. Two ballscrews, one forward and one aft of the shock strut, are attached to the crosshead assembly. The ballscrews extend through ball-nuts which are installed in the yoke. A pneumatic turbine, mounted on the yoke, drives two chains which rotate the ball-nuts, resulting in vertical movement of the yoke to raise or lower the airplane. As the airplane is lowered to a kneeled position, the bottom of the yoke comes in contact with a stop pad on the lower end of the shock strut piston or a removable collar installed for certain kneel modes. The shock strut cylinder continues to travel following this contact until the weight of the airplane has been substantially relieved from the shock strut air chambers, which prevents the shock strut from extending during cargo unloading. Power for operation of the drive module may be supplied through the bleed air system by the engines, the APUs or an external source. A spring-loaded brake in the drive system locks the mechanism when air pressure is removed at any point in the kneel cycle, thus preventing relative movement between the strut and the yoke.

The kneel control module, located at fuselage station 1460, right side cargo compartment, monitors the position of the main landing gear and the speed of the drive modules. It regulates the speed to maintain the relative position of the main landing gear within the prescribed asymmetry limits. If the asymmetry limits are reached, the control module stops operation of all drive modules. The asymmetry limits, referenced to the counter on each drive module, are:

(1) The forward gears are 17 to 20 revolutions apart.

or

(2) The aft gears are 17 to 20 revolutions apart

or

(3) The average of the forward gears is 72 to 75 revolutions from the average of the aft gears.

When a stop due to an asymmetry occurs, visual indication is given by the asymmetry lights on the landing gear control panel and on the kneel control module. Symmetry must then be established before continuing the kneeling operation. The main landing gears may also be kneeled individually by use of the individual kneel switches, located in the fairing forward of the main landing gear on each side of the airplane. Interlocks within the control module permit any one main landing gear or both forward main landing gears to be kneeled if the remaining main landing gears are unkneeled and centered.

Main Landing Gear Kneeling Collars

Two 4-inch and two 2.75-inch kneeling collars are stowed in the loose equipment lockers located on the right side of the cargo compartment. These are provided to maintain the desired position of the airplane in the forward and aft kneeled position.

Proper positioning of the airplane in either the aft or forward kneel mode requires selective restriction of the kneel distance of the main gears. Kneeling collars in combinations of sizes are installed around the shock strut pistons resting on the yoke stop pad.

For forward kneeling, the 4-inch collars are installed on the aft gears. For aft kneeling, the 4-inch and 2.75-inch collars are installed on the forward gears.

Nose Landing Gear Kneeling System.

The normal nose gear retraction mechanism, operating in a low speed output mode, is utilized for kneeling operations. When the airplane is in the forward or level kneel position, a roller mounted on the shock strut piston contacts a prepositioned kneel pad, thus transferring the load on the nose gear axle from the retraction mechanism to the pad. In the aft kneeling mode, the gear remains in the down and locked position.

On 00445 and up and airplanes modified by T.O. 1285, after the kneeling pad is extended for level kneeling, a kneeling pad extend pin must be inserted in the pad rig hole to visually indicate that the pad is in the extended position. For forward kneeling, the level kneel pad must be manually retracted. The level kneel pad must be manually extended back to the level kneel position before the kneel pads are electrically retracted. See figure 1-38.

NOSE LANDING GEAR STRUT LIMITER. A nose landing gear strut limiter is provided for use during forward kneeling operations. The limiter is a telescoping device that is connected between the shock strut outer cylinder and the shock strut piston. During forward kneeling, the limiter prevents the shock strut piston from extending beyond the point where the kneel stop mates with the kneel stop pad.

Landing Gear Kneeling System Controls.

KNEEL SELECT SWITCH (FLIGHT STATION). Selection of the desired kneeling mode is made through the KNEEL SELECT switch located on the landing gear control panel (figure 1-37). Any selection other than

"OFF" opens the pneumatic regulating valve. On 68304, 68307, 70167, 70168 and 70170 through 90027 not modified by T.O. 1285, it positions the kneeling pad to the required position.

KNEEL COMMAND BUTTON. The momentary contact KNEEL COMMAND button, located on the landing gear control panel (figure 1-37), is provided to energize the kneeling circuit once a kneeling mode has been selected. The kneeling mode must be selected and each main gear must be at 0 degrees before the button is operative for kneeling operation. Depressing the button then energizes the actuators to position the airplane as selected by the KNEEL SELECT switch.

KNEEL PAD ACTUATOR SWITCH. On 00445 and up and airplanes modified by T.O. 1285, a three-position, lever-lock KNEEL PAD ACTR switch (figure 1-37) is located in the aft right-hand side of the NLG wheel well. This switch is used to extend or retract the NLG kneeling pad. When the KNEEL PAD ACTR switch is placed in the "EXTEND" position, the kneeling pad will extend to the level kneel position and the PAD NOT STOW light will come on. Placing the KNEEL PAD ACTR switch to the "RETRACT" position retracts the pad to its stowed position. The PAD NOT STOW light then goes off. The switch is placed to the "OFF" position after the kneeling pad is extended or retracted.

AUXILIARY KNEEL CONTROL SWITCHES. There are five guarded switches on the auxiliary kneel control panel (figure 1-37). Placing the PWR SUPPLY & ISO VALVE switch in the "ON" position opens the wheel well isolation valve and supplies 28-volt DC power to the kneel control module. The remaining four switches, identified as LH FWD, LH AFT, RH FWD and RH AFT, when placed to "ARM" complete the circuits to their respective gears, allowing them to be kneeled by the operating switches. Placing any arming switch to "SAFE" prevents or interrupts the kneeling of that gear.

Landing Gear Kneeling System Indicators.

KNEELED LIGHT. The KNEELED light, located on the landing gear control panel (figure 1-37), comes on when the kneeling operation has been completed. The light receives 28-volt DC power from the main DC bus No. 1 (figure 1-68).

NOT UNKNEELED LIGHTS. The LH FWD NOT UNKNEELED, RH FWD NOT UNKNEELED, LH AFT NOT UNKNEELED AND RH AFT NOT UNKNEELED lights, located on the pilots' center instrument panel (figure 1-37), come on for their respective gear whenever that gear is not unkneeled. The lights receive 28-volt DC power from the isolated DC bus (figure 1-64).

PAD NOT STOWED LIGHT. The PAD NOT STOWED light, located on the landing gear panel (figure 1-37), comes on when the nose gear kneeling stops are not in the stowed position. The light receives 28-volt DC power from the main DC bus No. 1 (figure 1-68).

ASYMMETRY LIGHTS. The ASYMMETRY lights, one located on the landing gear control panel (figure 1-37) and one located on the kneel control module (figure 1-37), come on whenever a main landing gear asymmetry condition occurs during airplane kneeling and unkneeling. The lights receive 28-volt DC power from the main DC bus No. 1 (figure 1-68).

IN TRANSIT LIGHT. The IN TRANSIT light, located on the landing gear control panel (figure 1-37), comes on when a kneeling mode is initiated by the KNEEL COMMAND button or a MLG IN-FLIGHT KNEEL CONT switch. The light remains on until all gears return within the electrical unkneel limit using the KNEEL COMMAND button. The light receives 28-volt DC power from the main DC bus No. 1 (figure 1-68).

WHEEL WELL ISOLATION VALVE OPEN LIGHT. The WHEEL WELL ISO VALVE OPEN light (figure 1-21) comes on whenever the wheel well isolation valve is open. The light receives 28-volt DC power from the main DC bus No. 1 through the KNEEL IND LT circuit breaker (figure 1-68).

Landing Gear Kneeling System Control Module.

A kneeling control module (figure 1-37), installed on the right side of the cargo compartment, is used to control the MLG drive modules. The control module contains the following BITE controls and indicators:

BITE SWITCH. A three-position BITE SW switch is used to test the control module lights and the control module test circuits. Placing the BITE SW switch to the "LIGHT" position tests the CONTROL MODULE, LH AFT, LH FWD, RH AFT, RH FWD, SYM and ASYM lights on the control module. Placing the switch to the "TEST" position tests the control module test circuits. The switch is spring-loaded to the "OFF" position.

SYNCHRONIZATION SWITCH. A two-position synchronization switch is used to synchronize the MLG if they should become asymmetrical during a kneeling or unkneeling operation.

MLG DRIVE MODULE SELF MONITOR LIGHTS. The SELF MONITOR lights, located on the kneel control module (LH AFT, LH FWD, RH AFT, RH FWD) come on when an electrical malfunction occurs either on the respective drive module or in the interconnecting wiring between the kneel control module and drive module. The lights receive 28-volt DC power from the main DC bus No. 2 (figure 1-70).

CONTROL MODULE LIGHT. The CONTROL MODULE light, located on the kneel control module, comes on during the BITE test on the control module if the control module is defective. The light receives 28-volt DC power from the main DC bus No. 2 (figure 1-70).

KNEELING SYSTEM SYMMETRY LIGHT. A SYM light comes on when the four main landing gears are within the symmetrical limits of the kneeling system and the synchronization switch is on.

KNEELING SYSTEM ASYMMETRY LIGHT. An ASYM light comes on when the four main landing gears are not within the asymmetry limits of the kneeling system.

The kneel control module receives power from the 28-volt DC bus No. 2 (figure 1-67).

LANDING GEAR PNEUMATIC KNEELING SYSTEM OPERATION.

Note

On 68304, 68307, 70167, 70168 and 70170 thru 00460 not modified by T.O. 1345, refer to T.O. 1C-5A-2-10CL-1 for individual landing gear kneeling and for kneeling procedures using the auxiliary kneel control units.

If an external hydraulic cart is used, it must be adjusted to deliver a minimum of 2,500 PSI at a flow rate of 20 GPM.

The kneeling operation will require four qualified team members to operate and monitor the kneeling system. The kneeling team may consist of aircrew or maintenance personnel. These team members will have interphone communication with each other (without outside interference).

These four team members will be stationed at the following positions: copilot, cargo compartment, left MLG, and right MLG.

Copilot.

The team member at this station will be in control of the kneeling operation. He will read the checklist and the applicable team member will reply with the response. When the pilot and flight engineer stations are not occupied, he will also respond to all items marked (P) and (E). He will operate the kneeling system controls, observe and coordinate on the landing gear and kneeling system indications and other necessary systems as required.

Cargo Compartment. (Loadmaster)

This team member will be referred to as the Cargo Compartment Loadmaster and will be designated (CLM) in the checklist. He will operate the Pwr Supply & Iso Valve switch on the aux kneel control panel, the Arm/Safe switches on the same panel, observe the kneeling control module lights and synchronize the system if an asymmetrical condition occurs. If required, position the crew entrance ladder to the required kneeling position.

Left Main Landing Gear.

On 00445 and up and airplanes modified by T.O. 1285, this team member will be referred to as the Left Scanner and will be designated (LS) in the checklist. He will install and remove the NLG strut limiter (forward kneeling only), verify proper NLG strut extension, operate the Kneel Pad Actuator switch, manually position the level kneel pad, insert and remove the kneeling pad extend pin, remove and install the NLG downlock safety pin, install and remove the left MLG kneeling collar, install and remove the left MLG wheel chocks, observe the NLG and left MLG movement, and read the left MLG drive module counter (as required). He must be outside the wheel well and in a position to observe the operation of both left main landing gears and NLG.

On 00453 and up and airplanes modified by T.O. 1312, the left scanner will also unlock and lock the NLG folding bulkhead.

On 68304, 68307, 70167, 70168 and 70170 through 90027 not modified by T.O. 1285, this team member will be referred to as the Left Scanner and will be designated (LS) in the checklist. He will install and remove the NLG strut limiter (forward kneeling only), observe the operation and position of the kneeling pad, verify proper NLG strut extension, remove and install the NLG down lock safety pin, install and remove the left MLG kneeling collar, install and remove the left main landing gear wheel chocks, observe the NLG and left MLG movement, and read the left MLG drive module counter (as required). He must be outside the wheel well and in a position to observe the operation of both left main landing gears and the NLG.

Right Main Landing Gear.

This team member will be referred to as the Right Scanner and will be designated (RS) in the checklist. He will install and remove the right main landing gear kneeling collar, install and remove the right main landing gear wheel chocks, observe the right main landing gear movement and read the right MLG drive module counter (as required).

Kneeling Operation.

To prepare the airplane for the kneeling operation, accomplish the following:

CAUTION

The airplane must be fully unkneeled from any kneeled condition before going to any other kneel mode to prevent damage to the airplane.

CAUTION

Following two consecutive kneeling cycles, the system must not be operated for a minimum of 30 minutes. Failure to comply may result in overheating of the drive modules. (A cycle is defined as airplane movement from unkneeled to kneeled to unkneeled, or equivalent.)

CAUTION

Coordination will be required among the Navigator, Flight Engineer, and Loadmaster prior to kneeling the airplane. Movement of the airplane during the first 5 minutes of alignment, or within 5 minutes after turning off the IDNE, may damage the IMU.

Note

Provide the airplane with necessary electrical, hydraulic and pneumatic power in accordance with the procedures contained in Section II.

Note

Asterisk items need not be accomplished when engine running off/on load is being accomplished and when unkneeling operation is to begin immediately after the offload.

*1. Landing Gear Lever - "DOWN" (CP)

2. Landing Gear Circuit Breakers - "CLOSED" (E)

Check that the following circuit breakers are closed:

CIRCUIT BREAKER	FLIGHT ENGINEER'S CIRCUIT BREAKER PANEL
MLG DC BUS, MLG KNEEL BRAKE	AC LOAD CENTER
MLG DC BUS, MLG KNEEL CONTROL	AC LOAD CENTER
PNEU ISOLATION VALVE	AC LOAD CENTER
LANDING GEAR POS IND	NO. 2
LANDING GEAR WARN LT	NO. 2
MLG UNKNEEL IND LT	NO. 2
TOUCHDOWN 1	NO. 2
TOUCHDOWN 2	NO. 2
X-WIND NLG POS IND	NO. 3
KNEEL PAD ACTUATOR	NO. 4
MLG X-WIND POS IND LH	NO. 4
MLG X-WIND POS IND RH	NO. 4
MLG KNEEL	NO. 5

CIRCUIT BREAKER	FLIGHT ENGINEER'S CIRCUIT BREAKER PANEL
KNEEL IND LT	NO. 6
KNEEL PRESS REGULATOR	NO. 6
MLG CONTROL FWD RH	NO. 6
MLG CONTROL AFT RH	NO. 6
MLG CONTROL FWD LH	NO. 6
MLG CONTROL AFT LH	NO. 6
NLG CONTROL	NO. 6

3. Floor Heat Switch —"OFF" (E)

4. Hydraulic System No. 1 and No. 4 - "PRESSURIZED" (E)

Note

To relieve bleed air load requirements when only one APU is operable, System No. 4 ATM need only be used to position the crew entrance door ladder, reset the crosswind gear, and set the parking brakes. When operating with the System No. 4 ATM off, the emergency brake accumulator may bleed down.

5. Brake Switch - "EMER" (CP)

6. Parking Brakes - "SET" (P)

7. Landing Gear System Indicators - CHECKED (CP)

a. Landing Gear Position Indicators - GREEN WHEELS

b. Landing Gear Lever Warning Light - OFF

c. MLG Crosswind Position Indicators - CENTERED

d. NLG Crosswind Position Indicator - CENTERED

e. Crosswind Control - CENTERED (ZERO)

If all gears are not centered, accomplish the following:

(1) X-Wind Reset Switch - RESET/NORMAL

(2) Main Landing Gear CTR Lights-ON. The CLM will check that the CTR lights are on at all four MLG sequence control panels.

8. Kneeling System Indicators - "CHECKED" (CP)

a. In Transit Light - OFF

If the in transit light is on and the not unkneeled lights are off, the in transit light may be turned off by the following procedures:

(1) Place the Pwr Supply & Iso Valve switch to ON.

(2) Place the four Arm/Safe switches to SAFE.

(3) Place the BITE switch to TEST momentarily to turn off the in transit light.

(4) Place the Pwr Supply & Iso Valve switch to OFF.

b. Pad Not Stow Light - OFF

c. Kneeled Light - OFF

d. Asymmetry Light - OFF

e. Not Unkneeled Lights - OFF

If a not unkneeled light comes on, accomplish the following:

(1) Pwr Supply & Iso Valve Switch - ON

(2) Arm/Safe Switches for Applicable Gears - ARM

(3) MLG In-Flight Kneel Cont Switches for Applicable Gears - KNEEL (for approximately one minute)

(4) MLG In-Flight Kneel Cont Switches for Applicable Gears - UNKNEEL (until the not unkneeled light goes off)

(5) Turn off the in transit light in accordance with the procedure in step a.

CAUTION

If items a, b, c, d and e are not off, do not start the kneeling procedures. Maintenance should be accomplished to determine why the lights are not off.

Note

The following steps 9 and 13 through 18 may be accomplished prior to this time, provided each step is checked in the sequential order of the checklist.

9. Kneeling Team Report - "IN POSITION" (LS, RS, CLM)

10. Crew Entrance Ladder - "POSITIONED" (LS, CLM)

WARNING

Ensure that the crew door control handle is in the NEUT position before selecting any ladder position. Failure to comply could injure the operators hand, as the ladder starts to move.

11. Pwr Supply & Iso Valve Switch - "ON" (CLM)

Check that the wheel well iso valve open light comes on at the flight engineer's panel.

12. BITE Switch - LIGHT/OFF

Accomplish the following BITE test prior to kneeling the airplane.

Note

The airplane must be in the fully unkneeled position before accomplishing the kneeling system BITE test.

a. BITE Switch - LIGHT/OFF

Momentarily place the Kneel Control Module BITE switch to the LIGHT position. All the indicator lights on the control module should come on. Release the BITE switch to the OFF position. Replace any light that does not come on and test the lights again. If any MLG light remains on after the lights test, it indicates that an electrical fault exists in the respective drive module or connecting wiring.

b. BITE Switch - TEST/OFF

Place the Kneel Control Module BITE switch to the TEST position, hold for five seconds then release to the OFF position. Only the ASYM light shall come on. If any other light comes on and remains on in the TEST position, or if the ASYM light does not come on, the control module is defective.

CAUTION

A satisfactory BITE test must be accomplished prior to any kneeling to preclude possible damage to the landing gear. If The BITE test did not pass successfully, inflight kneeling may not be possible.

*13. MLG Wheel Chocks - AS REQUIRED" (LS, RS)

Ensure that chocks are installed 3 inches in front and rear of the forward tires of the aft MLG. If crew is in place with engines running, chocks are not required.

CAUTION

Do not chock the NLG wheels. Chocking could prevent the NLG from moving to its kneeled position and cause damage.

14. MLG Kneeling Collars - "AS REQUIRED" (LS, RS)

If the airplane is to be forward kneeled, install the 4-inch kneeling collars on the left and right aft main gear oleo struts. If the airplane is to be aft kneeled, install the 4-inch kneeling collars and the 2.75-inch kneeling collars on the left and right forward main gear oleo struts. If the airplane is to be level kneeled, kneeling collars are not required.

CAUTION

If the MLG kneeling collars are not installed in their proper position for the selected kneeling mode, structural damage to gears/collars may result.

15. NLG Downlock Pin - "INSTALLED" (LS)

16. NLG Strut Extension - "CHECKED" (LS)

Check that the NLG strut extension pointer is on the green side of the torque link placard.

CAUTION

Do not forward or level kneel the airplane if the NLG strut extension mechanical indicator is not on the green side of the torque link placard. Failure to comply could result in damage to the airplane.

17. NLG Strut Limiter - "INSTALLED" (LS) (FWD KNEEL ONLY)

18. NLG Folding Bulkhead - "UNLOCKED" (LS) (FWD AND LEVEL KNEEL ONLY) (FOLDING BULKHEAD HANDLE INSTALLED)

On 00453 and up and airplanes modified by T.O. 1312, place the NLG folding bulkhead handle to the UNLOCK position.

19. Kneel Pad Actuator Switch - "EXTEND/OFF" (LS) (FWD AND LEVEL KNEEL ONLY) (KNEEL PAD ACTUATOR SWITCH INSTALLED)

On 00445 and up and airplanes modified by T.O. 1285, position the Kneel Pad switch to EXTEND and check that the kneeling pad moves to the level kneel position and the pad not stow light comes on, then place the switch to OFF.

20. Kneeling Pad Extend Pin - "INSERTED" (LS) (FWD AND LEVEL KNEEL ONLY) (KNEEL PAD ACTUATOR SWITCH INSTALLED)

CAUTION

Ensure that the pad actuator is fully extended and the holes in the links are aligned before inserting the extend pin. Failure to comply could result in the pin being inserted with the pad improperly positioned and cause damage to the airplane.

On 00445 and up and airplanes modified by T.O. 1285, insert the kneeling pad extend pin.

21. Level Kneel Pad - "POSITIONED" (LS) (FWD KNEEL ONLY) (KNEEL PAD ACTUATOR SWITCH INSTALLED)

On 00445 and up and airplanes modified by T.O. 1285, manually position the level kneel pad to the forward kneel position.

22. NLG Gear Shift Switch - "LOW SHIFT" (CP)

Place the NLG Gear Shift switch to the LOW SHIFT position for level and forward kneel. The low kneel light should come on within 5 seconds.

If the low kneel light does not come on, place and hold the switch in the HIGH SHIFT AND TEST position until the high retract light comes on. Then repeat this step.

23. Kneel Select Switch - "AS REQUIRED" (CP)

Check that the pad not stow light comes on.

On 00445 and up and airplanes modified by T.O. 1285, the pad not stow light will already be on for forward and level kneel.

24. Kneeling Pads - "STATE POSITION" (LS) (FWD AND LEVEL KNEEL ONLY) (KNEEL PAD ACTUATOR SWITCH NOT INSTALLED)

On 68304, 68307, 70167, 70168 and 70170 through 90027 not modified by T.O. 1285, check that the kneeling pad is in the selected kneel position. (Reference marker tape aligned.)

25. Kneel Pad Actuator Circuit Breaker - "OPEN" (E)

Open the kneel pad actuator circuit breaker on the flight engineer's circuit breaker panel No. 4.

CAUTION

On 68304, 68307, 70167, 70168, and 70170 through 90027 not modified by T.O. 1285, failure to open the kneel pad actuator circuit breaker will cause the kneel pad to stow when the Kneel Select switch is placed to OFF.

26. NLG Downlock Pin - "AS REQUIRED" (LS)

Remove the NLG downlock pin for forward and level kneeling only.

27. Air Cond Master Switch - AS REQUIRED (E)

An air conditioning unit may be operated during kneeling operations as long as both APUs are supplying bleed air.

28. Clear for Kneeling - "CLEAR _____" (LS, RS)

Ensure that the area around the airplane, the NLG and MLG is clear of personnel and obstructions and the crew entrance ladder is at the required kneeling position. Scanners will respond clear left or right.

29. Arm/Safe Switches - "ARM" (CLM)

30. Kneel Command Button - "DEPRESSED" (CP)

Depress and hold the Kneel Command button until the kneeled light comes on. MLG movement will be indicated when the not unkneeled light comes on.

CAUTION

If a MLG module counter goes below 45 revolutions, it can result in damage to the kneeling stops.

CAUTION

If a scanner reports a gear moving in an uncommanded direction, the cargo compartment loadmaster will place the Arm/Safe switches to the SAFE position to stop gear movement and prevent possible damage.

During forward and level kneel, the following will occur:

The NLG position indicator will show red wheels as the nose gear starts to move aft.

The landing gear lever warning light will come on as the NLG downlock unlocks. The in-transit light and the not unkneeled lights will also come on.

The MLG will start to move after the NLG has moved approximately 35 degrees aft.

CAUTION

If the asymmetry light comes on and all main gear motion stops, continue to hold the Kneel Command button to allow the nose gear to complete travel to the kneeled position, then release the Kneel Command button and complete steps a through c.

Note

Within certain limits of airplane weight and C.G. position, the nose wheels of the airplane may rise from the ground. This is not an indication of instability, but rather results from the nose gear being retracted (kneeled) faster than the fuselage is being lowered by the main landing gear kneeling system. The airplane will come to rest on all gears as the kneeled position is reached.

During aft kneel, the following will occur:

The NLG will remain down and locked and green wheels will be indicated, the MLG will begin to kneel and the in-transit and not unkneeled lights will come on.

CAUTION

If the asymmetry light comes on, release the Kneel Command button immediately and complete steps a through c.

a. Synchronization Switch - "SYNC" (CLM)

Place the switch to SYNC until the following occurs:

The asym light goes off and the sym light on the kneeling control module comes on.

b. Synchronization Switch - "OFF" (CLM)

c. Kneel Command Button - "DEPRESSING NOW" (CP)

Continue the kneeling operation:

CAUTION

The airplane must not be moved along the ground when in any kneeled or partially kneeled position. Do not leave the airplane in a kneeled position if ground winds of a magnitude to require mooring are expected.

Except as required for immediate on/off loading operations, if delays are encountered during these operations and the kneeling system is operative, unkneel the airplane prior to leaving the airplane.

CAUTION

Failure to comply with the following procedure may cause damage to the airplane.

If a MLG ballscrew kneel stop is damaged or missing, the appropriate scanner will monitor the affected MLG drive module counter. If an affected drive module has not stopped when the counter reading is 050, the scanner will notify the copilot to release the Kneel Command button and tell the CLM to place the Arm/Safe switch for the appropriate MLG to SAFE. The copilot will then again depress the Kneel Command button. If the kneeled light is not on, continue the kneeling operation while monitoring any other MLG with a damaged or missing ballscrew kneel stop.

*31. Arm/Safe Switches - "SAFE" (CLM)

*32. Pwr Supply & Iso Valve Switch - "OFF" (CLM)

After placing the Pwr Supply & Iso Valve switch to OFF, check that the wheel well iso valve open light is off at the flight engineer's panel.

*33. Chocks - "AS REQUIRED" (LS, RS)

Note

Chocks installed against the front and rear of the forward tires of the aft MLG will prevent a static airplane from rolling with the brakes released.

If the engines are running during the kneeling operation, the chocks must be installed after the engines are shut down.

For loading operations, the chocks should not be placed against the tires. Maintain the three-inch spacing with the brakes set.

*34. Hydraulic and Pneumatic Power - AS REQUIRED (E)

WARNING

Chocks must be in place prior to shutting down No. 1 and 4 hydraulic power to preclude airplane movement in the event the brakes release.

35. Circuit Breakers - AS REQUIRED (E)

Open the following circuit breakers if the system is not to be immediately reactivated.

CIRCUIT BREAKER	FLIGHT ENGINEER'S CIRCUIT BREAKER PANEL
LANDING GEAR POS IND	NO. 2
LANDING GEAR WARN HORN	NO. 2
X-WIND COMPUTER	NO. 5
MLG CONTROL FWD RH	NO. 6
MLG CONTROL AFT RH	NO. 6
MLG CONTROL FWD LH	NO. 6
MLG CONTROL AFT LH	NO. 6
NLG CONTROL	NO. 6

36. Kneeling Check - "COMPLETED" (CP)

Unkneeling Operation.

CAUTION

Coordination will be required among the Navigator, Flight Engineer, and Loadmaster prior to unkneeling the airplane. Movement of the airplane during the first 5 minutes of alignment, or within 5 minutes after turning off the IDNE, may damage the IMU.

Note

Provide the airplane with necessary electrical and pneumatic power in accordance with the procedures in Section II.

1. Circuit Breakers - AS REQUIRED (E)

Check that the following circuit breakers are closed:

CIRCUIT BREAKER	FLIGHT ENGINEER'S CIRCUIT BREAKER PANEL
MLG DC BUS, MLG KNEEL BRAKE	AC LOAD CENTER
MLG DC BUS, MLG KNEEL CONTROL	AC LOAD CENTER
PNEU ISOLATION VALVE	AC LOAD CENTER
LANDING GEAR POS IND	NO. 2
LANDING GEAR WARN LT	NO. 2
MLG UNKNEEL IND LT	NO. 2
TOUCHDOWN 1	NO. 2
TOUCHDOWN 2	NO. 2
X-WIND NLG POS IND	NO. 3
KNEEL PAD ACTUATOR	NO. 4
MLG X-WIND POS IND LH	NO. 4
MLG X-WIND POS IND RH	NO. 4
MLG KNEEL	NO. 5
KNEEL IND LT	NO. 6
KNEEL PRESS REGULATOR	NO. 6
MLG CONTROL FWD RH	NO. 6
MLG CONTROL AFT RH	NO. 6
MLG CONTROL FWD LH	NO. 6
MLG CONTROL AFT LH	NO. 6
NLG CONTROL	NO. 6

2. Kneel Pad Actuator Circuit Breaker - "OPEN" (E)

CAUTION

On 68304, 68307, 70167, 70168 and 70170 through 90027 not modified by T.O. 1285, failure to open the kneel pad actuator circuit breaker will cause the kneel pad to stow when the Kneel Select switch is placed to OFF.

3. Hydraulic System No. 1 and 4 - "PRESSURIZED" (E)

CAUTION

If it is necessary to center a MLG when not unkneeled, actuate the applicable Main Landing Gear Bogie Emergency Positioning switch to the position required in an attempt to center the affected gear. Do not use the X-Wind Reset switch to center a MLG unless all MLG are fully unkneeled. To do so may result in damage to the airplane.

4. Parking Brakes - "SET" (P)

*5. MLG Wheel Chocks - "AS REQUIRED" (LS, RS)

Insure that chocks are installed 3 inches in front and rear of the forward tires of the aft MLG. If crew is in place with engines running, chocks are not required.

CAUTION

Do not chock the NLG wheels. Chocking could prevent the NLG from moving to its unkneeled position and cause damage.

6. Clear for Unkneeling - "CLEAR" (LS, RS)

7. Kneel Select Switch - "UNKNL" (CP)

8. Pwr Supply & Iso Valve Switch - "ON" (CLM)

After placing the Pwr Supply and Iso Valve switch to ON, check that the wheel well iso valve open light is on at the flight engineer's panel.

9. Arm/Safe Switches - "ARM" (CLM)

10. Kneel Command Button - "DEPRESSING NOW/ REPORT MLG AT TWO-INCH LIMIT" (CP)

a. Two-Inch Limit - "TWO-INCH LIMIT NOW" (LS, RS)

The scanner will report when the first of the four MLG reaches a point approximately two inches from fully unkneeled. This is determined by observing when the bottom of the mark on the inflight brake pressure line is aligned with the top of the bracket.

Release the Kneel Command button when either scanner reports a MLG has reached the two-inch limit.

If the asymmetry light comes on and all main gear motion stops during forward and level kneeling, continue to hold the Kneel Command button to allow the nose gear to complete travel to the unkneeled position. When the nose gear reaches the unkneeled position as indicated by a NLG down and locked indication, release the Kneel Command button and accomplish the following:

b. Synchronization Switch - "SYNC" (CLM)

Place the switch to SYNC until the following occurs:

The asym light goes off and the sym light on the kneeling control module comes on.

c. Synchronization Switch - "OFF" (CLM)

d. Kneel Command Button - "DEPRESSING NOW" (CP)

Continue the unkneeling operation.

The landing gear lever light will go off when the NLG position indicator indicates green wheels.

11. Kneel Select Switch - "OFF" (CP)

12. Individually Unkneel MLG - "UNKNEELED" (CP)

CAUTION

Prior to individually unkneeling the MLG, station a crew member at the aux kneel control panel. If a scanner reports a gear moving in an uncommanded direction, this crew member will place the Arm/Safe switches to the SAFE position to stop gear movement and prevent possible damage.

The MLG shall be unkneeled individually by using the Inflight Kneel switches in the following order: LH Forward, RH Forward, LH Aft, RH Aft.

The CLM shall initiate MLG unkneeling by stating "Unkneeling (name of MLG)." The full unkneeled condition of the gear will be determined by the not unkneeled light going off at which time the CP will state "(Name of MLG) unkneeled," followed by the LS, RS giving the counter reading. Upon hearing the CP state, "UNKNEELED," the CLM shall place the Inflight Kneel switch to OFF.

CAUTION

Damage to the kneeling pins may occur if the kneeling drive module does not change to a slower drive rate at an approximate counter reading of 326. A maintenance inspection is required of the affected kneeling pin if the rate of reduction is not observed.

CAUTION

If a counter reads in excess of 338, damage to a kneeling pin may have occurred and a maintenance inspection of that kneeling pin is required.

Upon completion of unkneeling the first gear, proceed to unkneel each succeeding gear using the same procedures. When all four gear have been unkneeled, the CP will state, "UNKNEELED."

13. Kneeling Indicators - "CHECKED" (CP)

Check that the in transit light is off, the not unkneeled lights are off, and all landing gear position indicators indicate green wheels.

If the intransit or not unkneeled lights are not off, use the procedure in step 8.a. or 8.e. of the Kneeling Checklist, as applicable.

14. Arm/Safe Switches - "SAFE" (CLM)

15. Pwr Supply & Iso Valve Switch - "OFF" (CLM)

After placing the Pwr Supply & Iso Valve switch to OFF, check that the wheel well iso valve light is off at the flight engineer's panel.

16. MLG Kneeling Collars - "REMOVED" (LS, RS)

*17. NLG Downlock Pin - "INSTALLED" (LS)

18. Kneel Pad Actuator Circuit Breaker - "CLOSED" (E)

Close the kneel pad actuator circuit breaker on the flight engineer's circuit breaker panel No. 4.

19. Kneeling Pad - "STOWED" (CP, LS) (FWD AND LEVEL KNEEL)

On 00445 and up and airplanes modified by T.O. 1285, accomplish the following:

a. Kneeling Pad Extend Pin - REMOVED (LS)

b. Level Kneel Pad - STOWED (LS)

c. Kneel Pad Actuator Switch - RETRACT/OFF (LS)

Visually check to assure that the kneeling pads are properly stowed and that the pad not stow light is off. Then place the switch to OFF.

20. NLG Folding Bulkhead - "LOCKED" (LS) (FOLDING BULKHEAD HANDLE INSTALLED)

On 00453 and up and airplanes modified by T.O. 1312, place the NLG folding bulkhead handle to the LOCK position.

21. NLG Strut Limiter - "REMOVED" (LS)

22. NLG Gear Shift Switch - "HI SHIFT AND TEST" (CP)

Place and hold the NLG Gear Shift switch to the HI SHIFT AND TEST position until the high retr light comes on or for a maximum of 5 seconds, then release the switch to the OFF position. If the high retr light does not come on, place the switch to the LOW SHIFT position until the low kneel light comes on and repeat this step.

23. NLG Downlock Pin - "AS REQUIRED" (LS)

Remove the downlock pin if the Before Starting Engines checklist has been accomplished, otherwise leave it installed.

24. Crew Entrance Ladder - "POSITIONED" (LS, CLM)

25. Parking Brakes - "AS REQUIRED" (P)

*26. Hydraulic System No. 1 and 4 - "AS REQUIRED" (E)

WARNING

Chocks must be in place prior to shutting down the No. 1 and 4 hydraulic power supply to preclude airplane movement in the event the brakes release.

*27. APU Bleed Valves - AS REQUIRED (E)

*28. APU Operation - AS REQUIRED (E)

*29. Electrical Power - AS REQUIRED (E)

*30. Landing Gear Circuit Breakers - AS REQUIRED (E)

After completion of unkneeling, except during operational stops, kneeling with engines running, or when the Before Leaving Airplane Checklist is to be accomplished, open the following circuit breakers before leaving the airplane:

CIRCUIT BREAKER	FLIGHT ENGINEER'S CIRCUIT BREAKER PANEL
LANDING GEAR POS IND	NO. 2
LANDING GEAR WARN HORN	NO. 2
X-WIND COMPUTER	NO. 5
MLG CONTROL FWD RH	NO. 6
MLG CONTROL AFT RH	NO. 6
MLG CONTROL FWD LH	NO. 6
MLG CONTROL AFT LH	NO. 6
NLG CONTROL	NO. 6

31. Unkneeling Check - "COMPLETED" (CP)

MAIN LANDING GEAR INFLIGHT KNEELING (HYDRAULIC).

On 00461 and up and airplanes modified by T.O. 1345. While in the extended position, each main landing gear has the capability of being kneeled in flight. The controls for inflight kneeling are located at each landing gear service center in the cargo compartment (figure 1-40).

Note

All main landing gear can be fully kneeled regardless of bogie pitch position. The forward main gear can be fully kneeled in flight regardless of bogie rotation position (0 to 90 degrees). The aft main gear can be fully kneeled inflight except for a bogie rotational position of 45 to 85 degrees. In this position, the inboard aft tire will contact the fairing aft of the outboard door opening, stalling out the kneel drive motor. The tires may not clear the ground on landing.

Note

Inflight kneeling will only be operable when normal down rotate hydraulic pressure is available.

Main Landing Gear Inflight Kneeling System Controls.

Four MLG Kneeling system control valves (Figure 1-40) are used to kneel or unkneel their respective MLG. Each valve has a KNEEL and UNKNEEL pushbutton. Depressing the KNEEL pushbutton, with its respective MLG extended, will cause that gear to kneel. Depressing the UNKNEEL pushbutton, with its respective MLG kneeled, will cause that gear to unkneel.

Main Landing Gear Inflight Kneeling System Indicators.

During inflight kneeling of a MLG the flight engineer's NOT UNKNEELED and the pilots' KNEEL lights come on as soon as the MLG starts to kneel. When a MLG has fully kneeled, the flight engineer's KNEELED light for that gear comes on.

MAIN LANDING GEAR INFLIGHT KNEELING (PNEUMATIC).

On 68304, 68307, 70167, 70168 and 70170 through 00460 not modified by T.O. 1345.

While in the extended position, each main landing gear has the capability of being kneeled in flight. The controls for inflight kneeling are located on two panels installed on the right side of the cargo compartment (figure 1-37).

CAUTION

All main landing gear can be fully kneeled regardless of bogie pitch position. The forward main gear can be fully kneeled in flight regardless of bogie rotation position (0 to 90 degrees). The aft main gear can be fully kneeled in flight except for a bogie rotational position of 45 to 85 degrees. In this position the inboard aft tire will contact the fairing aft of the outboard door opening, stalling out the kneel drive module. The tires may not clear the ground on landing.

Main Landing Gear Inflight Kneeling System Controls.

PWR SUPPLY & ISO VALVE SWITCH. Before inflight kneeling or unkneeling, the PWR SUPPLY & ISO VALVE switch, on the AUX KNEEL CONTROL panel (figure 1-37), is placed to "ON." This action opens the wheel well isolation valve and arms the kneeling drive control module.

MAIN LANDING GEAR INFLIGHT KNEEL CONTROL SWITCHES. Four switches on the MLG IN-FLIGHT KNEEL CONTROL SWITCHES panel (figure 1-37), located on the right side of the cargo compartment between the No. 3 and No. 4 hydraulic service centers, are used to kneel one or more of the MLG's in flight. A landing gear can be kneeled by placing the associated switch to "KNEEL," the PWR SUPPLY & ISO VALVE switch (AUX KNEEL CONTROL panel) to "ON" and the associated arming switch (AUX KNEEL CONTROL panel) to the "ARM" position. Releasing the inflight kneel control switch to "OFF" will stop the kneeling or unkneeling operation, if in progress. The switch is released to "OFF" at the end of the kneeling or unkneeling operation. The inflight kneel control switches receive 28-volt DC power from the main DC bus No. 2 (figure 1-67).

Main Landing Gear Inflight Kneeling System Indicators.

During inflight kneeling of the MLG, the IN TRANSIT and NOT UNKNEELED lights will come on and remain on as long as a landing gear is in the not unkneeled position.

LANDING GEAR HYDRAULIC KNEELING SYSTEM.

On 00461 and up and airplanes modified by T.O. 1345, provisions are made in the main and nose landing gear to lower the airplane from the static ground position to accommodate cargo loading. The airplane may be level kneeled, forward kneeled, or aft kneeled.

Main Landing Gear Kneeling System.

Each main landing gear shock strut assembly is designed so that it can move vertically through a yoke attached to the airframe which is formed integrally with the top of the shock strut. A crosshead assembly, carrying the crosswind and rotation actuators, is formed integrally with the top of the shock strut. Two ballscrews, one forward and one aft of the shock strut, are attached to the crosshead assembly. The ballscrews extend through ball-nuts which are installed in the yoke. A hydraulic motor/gearbox, mounted on the yoke, drives chains which rotate the ballnuts, resulting in vertical movement of the yoke to raise or lower the airplane. As the airplane is lowered to a kneeled position, the bottom of the yoke comes in contact with a shoulder on the shock strut piston in level kneel or the top of the applicable kneel collars on two of the struts in forward or aft kneel. The shock strut cylinder continues to travel following this contact until the weight of the airplane has been substantially relieved from the shock strut air chambers, which prevents the shock strut from extending during cargo unloading. Hydraulic power for the kneeling operation may be supplied by the engines, ATM hydraulic pumps or ground cart(s). A spring-loaded brake in the drive system, mounted to the gearbox drive mechanism, locks the mechanism when hydraulic pressure is removed at any point in the kneel cycle, thus preventing relative movement between the strut and the yoke.

Hydraulic pressure from the No. 1 system operates the two aft MLG and the nose gear and the No. 4 system operates the two forward MLG.

The MLG may also be kneeled individually by individual maintenance switches located in the fairing forward of the MLG on each side of the airplane. Manual override of each MLG is provided for inflight kneeling or operation without electrical power.

CAUTION

Since the individual kneeling switches are not electrically interlocked, only the following kneeling combinations may be accomplished: either or both forward MLG kneeled with both aft MLG fully unkneeled, or only one aft MLG kneeled with all other gears fully unkneeled. Any kneeling combination other than that stated above may cause structural damage.

Main Landing Gear Kneeling Collars.

Two 4-inch and two 2.75-inch kneeling collars, stowed in the loose equipment lockers located on the right side of the cargo compartment, are provided to maintain the desired position of the airplane in the forward and aft kneeled position.

Proper positioning of the airplane in either the aft or forward kneel mode requires selective restriction of the kneel distance of the main gears. Kneeling collars in combinations of sizes are installed around the shock strut pistons resting on the yoke stop pad.

For forward kneeling, the 4-inch collars are installed on the aft gears. For aft kneeling, the 4-inch and the 2.75-inch collars are installed on the forward gears.

Nose Landing Gear Kneeling System.

The normal nose gear retraction mechanism, operating in a low speed output mode, is utilized for kneeling operations. When the airplane is in the forward or level kneel position, a roller mounted

on the shock strut piston contacts a prepositioned kneel pad, thus transferring the load on the nose gear axle from the retraction mechanism to the pad. In the aft kneeling mode, the gear remains in the down and locked position.

On 00445 and up and airplanes modified by T.O. 1285, after the kneeling pad is extended, a kneeling pad extend pin must be inserted in the pad rig-pin hole to visually indicate that the pad is in the extended position. For forward kneeling, the level kneel pad must be manually retracted. The level kneel pad must be manually extended back to the level position before the kneel pads are electrially retracted. (figure 1-38).

NOSE LANDING GEAR STRUT LIMITER. A nose landing gear strut limiter is provided for use during forward kneeling operations. The limiter is a telescoping device that is connected between the shock strut outer cylinder and the shock strut piston. During forward kneeling, the limiter prevents the shock strut piston from extending beyond the point where the kneel stop mates with the kneel stop pad.

Landing Gear Kneeling System Controls.

All controls and indicators, except the individual maintenance switches, the kneel pad actuator switch and the kneel light on the main instrument panel, are located on the landing gear kneel system control and indicator panel at the flight engineer's station (figure 1-40).

KNEEL SELECT SWITCH. Selection of the desired kneeling mode is made through the KNEEL SELECT switch located on the landing gear kneel system control and indicator panel. Any position other than "OFF" arms the kneeling system and selects the desired kneeling mode. The "INDIV" position arms the individual kneeling switches at each MLG. The individual modes are selected by the following switch positions: "UNKNL", "FWD", "LEVEL", and "AFT".

KNEEL COMMAND SWITCH. A momentary, three-position, lever-lock KNEEL COMMAND switch, located on the landing gear kneel system control indicator panel, is provided to operate the kneel system once the system is armed by selection of a kneeling mode with the KNEEL SELECT switch. A kneeling mode must be selected and each MLG must be centered within ±3 degrees before the KNEEL COMMAND switch is armed for the kneeling operation. Placing the KNEEL COMMAND switch from the "OFF" position to the "KNEEL" or "UNKNL" position starts the kneeling or unkneeling operation.

KNEEL PAD ACTUATOR SWITCH. On 00445 and up and airplanes modified by T.O. 1285, a three-position, lever-lock KNEEL PAD ACTR switch (figure 1-37) is located in the aft right-hand side of the NLG wheel well. This switch is used to extend or retract the NLG kneeling pad. When the KNEEL PAD ACTR switch is held in the "EXTEND" position, the kneeling pad will extend to the level kneel position and the PAD NOT STOW light comes on. Holding the KNEEL PAD ACTR switch to the "RETRACT" position retracts the pad to its stowed position. The PAD NOT STOW light then goes off. The switch is placed to the "OFF" position after the kneeling pad is extended or retracted.

Landing Gear Kneeling System Indicators.

ARMED LIGHT. The ARMED light, located on the landing gear kneel control and indicator panel, comes on whenever the KNEEL SELECT switch is rotated from "OFF" to "UNKNL" and when it is rotated from OFF to any of the other four positions and the MLG's are in their center (0-degree) position. The light receives 28-volt DC power from the MLG KNEEL CONtrol circuit breaker located on the main DC bus No. 2 (figure 1-67).

KNEEL LIGHT. The KNEEL light, located to the left of the landing gear control panel, comes on whenever any gear is not unkneeled or the NLG kneel pad is not stowed. The light receives 28-volt DC power from the MLG UNKNEEL IND LT circuit breaker on the isolated DC bus (figure 1-64).

KNEELED LIGHTS. The NLG KNEELED, LH FWD KNEELED, RH FWD KNEELED, LH AFT KNEELED and RH AFT KNEELED lights, located on the landing gear kneel control and indicator panel, come on for their respective gear whenever that gear is fully kneeled. The lights receive 28-volt DC power from the KNEEL IND LIGHTS circuit breaker located on the No. 1 DC bus (figure 1-68).

Note

The NLG KNEELED light will come on immediately when the KNEEL SELECT switch is placed in "AFT".

NOT UNKNEELED LIGHTS. The NLG NOT UNKNEELED, LH FWD NOT UNKNEELED, RH FWD NOT UNKNEELED, LH AFT NOT UNKNEELED and RH AFT NOT UNKNEELED lights, located on the landing gear kneel control and indicator panel, come on for their respective gear whenever that gear is not completely unkneeled. The lights receive 28-volt DC power from the MLG UNKNEEL IND LT circuit breaker located on the isolated DC bus (figure 1-64).

PAD NOT STOW LIGHT. The PAD NOT STOW light, located on the landing gear kneel system control and indicator panel, comes on when the nose gear kneeling stops are not in the stowed position. The light receives 28-volt DC power from the MLG UNKNEEL IND LT circuit breaker located on the isolated DC bus (figure 1-64).

LANDING GEAR HYDRAULIC KNEELING SYSTEM OPERATION.

If external hydraulic carts are used, they shall be adjusted to deliver a minimum of 3,000 PSI at a flow rate of 40 GPM for either hydraulic system No. 1 or 4.

The kneeling operation will require three qualified team members who will have exclusive use of the interphone and will remain in continuous contact with each other. The kneeling team may consist of aircrew or maintenance personnel.

These three team members shall be stationed at the following positions: flight engineer's station, left MLG and right MLG.

Flight Engineer.

The team member at this station will be in control of the kneeling operation. He will read the checklist and the applicable team member will reply with the response. When the pilot and copilot stations are not occupied, he will also respond to all items marked (P) and (CP). He will operate the kneeling system controls, observe and coordinate on the landing gear and kneeling system indications and other necessary systems as required.

Left Main Landing Gear.

This team member will be referred to as the left scanner and will be designated (LS) in the checklist. He will check NLG strut extension, install and remove the NLG strut limiter, unlock and lock the NLG folding bulkhead, operate the KNEEL PAD ACTUATOR switch, insert and remove the kneeling pad extend pin, manually position the level kneel pad, remove and install the NLG downlock pin, install and remove the left MLG kneeling collar(s), install and remove the left MLG wheel chocks, position the crew entrance ladder, observe the NLG and both left MLG kneeling movement, and read the left MLG drive counters before beginning and after completing a kneel or unkneel operation.

Right Main Landing Gear.

This team member will be referred to as the right scanner and will be designated (RS) in the checklist. He will install and remove the right MLG kneeling collar(s), install and remove the right MLG wheel chocks, observe both right MLG kneeling movement, and read the right MLG drive counters before beginning and after completing a kneel or unkneel operation.

Kneeling Operation.

To prepare the airplane for the kneeling operation, accomplish the following:

CAUTION

The airplane should be fully unkneeled from any kneeled condition before going to any other kneel mode. This is necessary to reposition the kneeling collars and kneeling pad.

CAUTION

Coordination will be required among the Navigator, Flight Engineer, and Loadmaster prior to kneeling the airplane. Movement of the airplane during the first 5 minutes of alignment, or within 5 minutes after turning off the IDNE, may damage the IMU.

Note

Provide the airplane with necessary electrical and hydraulic power in accordance with the procedures contained in Section II.

Note

Asterisk items need not be accomplished when engine running off/on load is being accomplished and when unkneeling operation is to begin immediately after the offload.

*1. Landing Gear Lever - "DOWN" (CP)

2. Landing Gear Circuit Breakers - CLOSED (E)

Check that the following circuit breakers are closed:

CIRCUIT BREAKER	BUS	FLIGHT ENGINEER'S CIRCUIT BREAKER PANEL
LANDING GEAR POS IND	ISOLATED DC BUS	NO. 2
LANDING GEAR WARN LT	ISOLATED DC BUS	NO. 2
MLG UNKNEEL IND LT	ISOLATED DC BUS	NO. 2
TOUCHDOWN 1	ISOLATED DC BUS	NO. 2

CIRCUIT BREAKER	BUS	FLIGHT ENGINEER'S CIRCUIT BREAKER PANEL
TOUCHDOWN 2	ISOLATED DC BUS	NO. 2
X-WING NLG POS IND	FWD MAIN AC BUS NO. 3	NO. 3
KNEEL PAD ACTUATOR	FWD MAIN AC BUS NO. 1	NO. 4
MLG X-WIND POS IND LH	FWD MAIN AC BUS NO. 1	NO. 4
MLG X-WIND POS IND RH	FWD MAIN AC BUS NO. 1	NO. 4
MLG KNEEL CONTROL	MAIN DC BUS NO. 2	NO. 5
KNEEL IND LIGHTS	MAIN DC BUS NO. 1	NO. 6
KNEEL PRESS REGULATOR	MAIN DC BUS NO. 1	NO. 6
MLG CONTROL FWD RH	MAIN DC BUS NO. 1	NO. 6
MLG CONTROL AFT RH	MAIN DC BUS NO. 1	NO. 6
MLG CONTROL FWD LH	MAIN DC BUS NO. 1	NO 6
MLG CONTROL AFT LH	MAIN DC BUS NO. 1	NO. 6
NLG CONTROL	MAIN DC BUS NO. 1	NO. 6

3. Floor Heat Switch - OFF (E)

4. Hydraulic System No. 1 and No. 4 - "PRESSURIZED" (E)

CAUTION

Do not use PTU's to pressurize a hydraulic system for kneeling the airplane. If hydraulic pressure falls below 1,500 PSI, stop the kneeling operation. Failure to comply could result in damage to the airplane.

5. Brake Switch - "EMER" (CP)

6. Parking Brakes - "SET" (P)

7. Landing Gear System Indicators - "CHECKED" (CP)

a. Landing Gear Position Indicators - GREEN WHEELS

b. Landing Gear Lever Warning Light - OFF

c. MLG Crosswind Position Indicators - CENTERED

d. NLG Crosswind Position Indicator - CENTERED

e. Crosswind Control - CENTERED (ZERO)

If all gears are not centered, accomplish the following:

(1) X-Wind Reset Switch - RESET/NORMAL

8. Kneeling System Indicators - CHECKED (E)

a. Kneel Light - OFF

b. Armed Light - OFF

c. Pad Not Stow Light - OFF

d. Kneeled Lights - OFF

e. Not Unkneeled Lights - OFF

Note

The following steps 9 and 11 through 16 may be accomplished prior to this time, provided each step is checked in the sequential order of the checklist.

9. Kneeling Team Report - "IN POSITION" (LS, RS)

10. Crew Entrance Ladder - "POSITIONED" (LS)

Select the proper ladder position and retract the ladder with the external crew door control handle. If the external handle is not accessible, the team member at the flight engineer's station will have to retract the ladder with the internal controls.

WARNING

Assure that the crew door control handle is in the NEUT position before selecting any ladder position. Failure to do so could injure the operator's hand as the ladder starts to move.

*11. MLG Wheel Chocks - "AS REQUIRED" (LS, RS)

Insure that chocks are installed three inches in front and rear of the forward tires of the aft MLG. If crew is in place with engines running, chocks are not required.

CAUTION

Do not chock the NLG wheels. Chocking could prevent the NLG from moving to its kneeled position and cause damage.

12. MLG Kneeling Collars - "AS REQUIRED" (LS, RS)

If the airplane is to be forward kneeled, install a 4-inch kneeling collar on both aft main gear oleo struts. If the airplane is to be aft kneeled, install a 4-inch and a 2.75-inch kneeling collar on each forward main gear oleo strut. Kneeling collars are not required for level kneeling.

CAUTION

If the MLG kneeling collars are not installed in their proper position for the selected kneeling mode, structural damage to gears/collars may result.

13. NLG Downlock Pin - "INSTALLED" (LS)

14. NLG Strut Extension - "CHECKED" (LS)

CAUTION

Do not forward or level kneel the airplane if the NLG strut extension pointer is not on the green side of the torque link placard. Failure to comply could result in damage to the airplane.

15. NLG Strut Limiter - "INSTALLED" (LS) (FWD KNEEL ONLY)

16. NLG Folding Bulkhead - "UNLOCKED" (LS) (FWD AND LEVEL KNEEL ONLY) (FOLDING BULKHEAD HANDLE INSTALLED)

On 00453 and up and airplanes modified by T.O. 1312, place the NLG folding bulkhead handle to the UNLOCK position.

17. Kneel Pad Actuator Switch - "EXTEND/OFF" (LS) (FWD AND LEVEL KNEEL ONLY)

Place the Kneel Pad Actr switch to EXTEND and visually check that the kneeling pad moves to the level kneel position. Then, place the switch to OFF. The flight engineer will check that the kneel light on the center instrument panel and the pad not stow light are on.

18. Kneel Pad Extend Pin - "INSERTED" (LS) (FWD AND LEVEL KNEEL ONLY)

CAUTION

Ensure that the pad actuator is fully extended and the holes in the links are aligned before inserting the extend pin. Failure to comply could result in the pin being inserted with the pad improperly positioned and cause damage to the airplane.

19. Level Kneel Pad - "POSITIONED" (LS) (FWD KNEEL ONLY)

20. NLG Gear Shift Switch - LOW SHIFT (E) (FWD AND LEVEL KNEEL ONLY)

Place the NLG Gear Shift Switch to the LOW SHIFT position. The low/kneel light should come on within 5 seconds. If the low kneel light does not come on, place and hold the switch in the HIGH SHIFT AND TEST position until the high retract light comes on. Then repeat this step.

21. NLG Downlock Pin - "AS REQUIRED" (LS)

Remove the NLG downlock pin for forward and level kneeling only.

22. Air Cond Master Switch - AS REQUIRED (E)

One air conditioning unit may be operated during kneeling operations if both APUs are supplying bleed air.

23. Clear for Kneeling - "CLEAR _____" (LS, RS)

Assure that the area around the airplane, the NLG and MLG is clear of personnel and obstructions and the crew entrance ladder is at the required position. Scanners will respond clear right or left.

24. Kneel Select Switch - AS REQUIRED (E)

Select the desired kneeling mode and check that the armed light comes on.

Note

All MLG must be centered (CTR lights on the MLG sequence control panels on) before the armed light will come on.

25. Kneel Command Switch - "KNEEL" (E)

Position the Kneel Command switch to KNEEL. The MLG not unkneeled lights and the kneel light on the center instrument panel should come on and for forward and level kneeling the NLG not unkneeled light should come on. If all MLG not unkneeled lights (and NLG not unkneeled light for forward and level kneel) do not come on within 15 seconds after positioning the Kneel Command switch to KNEEL, return the switch to OFF.

Note

If a MLG stops at an intermediate position, or the desired airplane to ground clearance is not maintained, stop the kneeling operation by placing the kneel command switch to OFF. Attempt to locate the source of the problem.

Continue the kneeling operation until the appropriate kneeled lights come on, then position the Kneel Command switch to OFF.

CAUTION

The airplane must not be moved along the ground when in any kneeled or partially kneeled position. Do not leave the airplane in a kneeled position if ground winds of a magnitude to require mooring are expected.

Except as required for immediate ON/OFF loading operations, if delays are encountered during these operations and the kneeling system is operative, unkneel the airplane prior to leaving the airplane.

26. Check MLG Module Counters at 285 (±4) - "CHECKED" (LS, RS)

*27. Chocks - "AS REQUIRED" (LS, RS)

Note

Chocks installed against the front and rear of the forward tires of the aft MLG will prevent a static airplane from rolling with the brakes released.

If the engines are running during the kneeling operation, the chocks must be installed after the engines are shut down.

For loading operations, the chocks should not be placed against the tires. Maintain the three-inch spacing with the brakes set.

*28. Hydraulic and Pneumatic Power - AS REQUIRED (E)

WARNING

Chocks must be in place prior to shutting down No. 1 and 4 hydraulic power to preclude airplane movement in the event the brakes release.

29. Kneeling Check - "COMPLETED" (E)

Unkneeling Operation.

CAUTION

Coordination will be required among the Navigator, Flight Engineer, and Loadmaster prior to unkneeling the airplane. Movement of the airplane during the first 5 minutes of alignment, or within 5 minutes after turning off the IDNE, may damage the IMU.

Note

Provide the airplane with necessary electrical and hydraulic power in accordance with the procedures in Section II.

1. Hydraulic System No. 1 and No. 4 - "PRESSURIZED" (E)

CAUTION

Do not use PTU's to pressurize a hydraulic system for unkneeling the airplane. If hydraulic pressure falls below 1,500 PSI, stop the unkneeling operation. Failure to comply could result in damage to the airplane.

CAUTION

Do not use the X-Wind Reset switch to center a MLG unless all MLG are fully unkneeled. To do so may result in damage to the airplane.

2. Parking Brakes - "SET" (P)

3. MLG Wheel Chocks - "AS REQUIRED" (LS, RS)

Insure that chocks are installed three inches in front and rear of the forward tires of the aft MLG. If the crew is in place with engines running, chocks are not required.

CAUTION

Do not chock the NLG wheels. Chocking could prevent the NLG from moving to its unkneeled position and incur damage.

4. Clear for Unkneeling - "CLEAR" (LS, RS)

5. Kneel Select Switch - UNKNL (E)

6. Kneel Command Switch - "UNKNL" (E)

Position the Kneel Command Switch to UNKNL. If all kneeled lights do not go off within 15 seconds after placing the Kneel Command switch to UNKNL, return the switch to OFF. Continue to hold the Kneel Command switch for approximately 5 seconds after all not unkneeled lights go off.

Note

If a MLG stops at an intermediate position, continue unkneeling the airplane to the full unkneeled position. Then, attempt to unkneel the faulty gear.

7. Kneel Select Switch - OFF (E)

8. MLG Module Counters at Zero (±1) - "CHECKED" (LS, RS)

9. MLG Kneeling Collars - "REMOVED" (LS, RS)

*10. NLG Downlock Pin - "INSTALLED" (LS)

11. Kneeling Pad - "STOWED" (E, LS)

a. Kneeling Pad Extend Pin - REMOVED (LS)

b. Level Kneel Pad - STOWED (LS)

c. Kneel Pad Actuator Switch - RETRACT/OFF (LS)

Place the Kneel Pad Actr switch to RETRACT and visually check that the kneeling pads are properly stowed. Then, place the switch to OFF. The flight engineer will check that the kneel light on the center instrument panel and the pad not stow light are off.

12. NLG Folding Bulkhead - "LOCKED" (LS)

On 00453 and up and airplanes modified by T.O. 1312, place the NLG folding bulkhead handle to the LOCK position.

13. NLG Strut Limiter - "REMOVED" (LS)

14. NLG Gear Shift Switch - HI SHIFT AND TEST (E)

Hold the NLG Gear Shift switch in HI SHIFT AND TEST until the high/retr light comes on. If the high/retr light does not come on within 3 seconds, place the NLG Gear Shift switch to LOW SHIFT for a minimum of 2 seconds and then to HI SHIFT AND TEST. The high/retr light should then come on.

15. NLG Downlock Pin - "AS REQUIRED" (LS)

Remove the downlock pin if the Before Starting Engines checklist has been accomplished, otherwise leave it installed.

16. Crew Entrance Ladder - "POSITIONED" (LS)

*17. Parking Brakes - "AS REQUIRED" (P)

*18. Hydraulic System No. 1 and 4 - AS REQUIRED (E)

WARNING

Chocks must be in place prior to shutting down No. 1 and 4 hydraulic power to preclude airplane movement in the event the brakes release.

*19. APU Bleed Valves - AS REQUIRED (E)

*20. APU Operation - AS REQUIRED (E)

*21. Electrical Power - AS REQUIRED (E)

22. Unkneeling Check - "COMPLETED" (E)

BRAKE SYSTEM.

Each main gear has six multiple-disc, beryllium composite wheel brakes which are paired as shown in figure 1-41.

Pressurized fluid to actuate the brakes may be supplied from the No. 4 hydraulic system (normal) or from the No. 1 hydraulic system (alternate) or from a 400-cubic inch accumulator pressurized by system No. 4 (figure 1-41). Brake system selection is provided by a switch on the center instrument panel. Normal brake pressure is supplied from the forward gear hydraulic manifold and alternate brake pressure is supplied from the aft gear hydraulic manifold.

Each of the four main landing gear brake systems is controlled by an electro-hydraulic anti-skid control valve which consists of three two-stage metering valves and two shuttle valves. Each pair of brakes within a single main gear brake system is controlled by one of the two-stage metering valves which is controlled by metered pressure from the respective pilot metering valve and the electronic skid control circuitry. The pilot metering valves are connected by mechanical linkages to the brake pedals on the pilot's and copilot's rudder pedals.

When the brake pedals are depressed, pilot-metered pressure is applied to the two-stage metering valves which meter pressure from the landing gear down rotate line to the brake. The two-stage metering valves, in response to the pilot-metered pressure and the electronic skid control circuitry, modulate the pressure applied directly to the brakes. In the event that hydraulic pressure is not available from system No. 1 or system No. 4, the fully charged accumulator will provide three full brake applications. This emergency pressure is applied by the pilot metering valves through the shuttle valves directly to the brakes.

The brake system incorporates a parking brake function which utilizes pressure from the normal or

alternate system or from the emergency accumulator. To set the brakes, the brake pedals are depressed, the parking brake handle is pulled, and the pedals released. This latches the brake pedals in the depressed position to keep pressure applied on the brakes.

Brake System Controls and Indicators.

BRAKE SUPPLY SELECTOR SWITCH. The BRAKE SUP. selector switch, located on the pilot's center instrument panel (figure 1-37), is provided to select the normal, alternate, or emergency supply systems for brake operations. In the "NORM" position, the hydraulic system No. 4 solenoid-operated shutoff valve is open and the emergency and the No. 1 system shutoff valves are closed. In the "ALT" position, the hydraulic system No. 1 solenoid-operated shutoff valve is open and the emergency and No. 4 system shutoff valves are closed. In the "EMER" position, the No. 1 and No. 4 hydraulic system shutoff valves are closed and the emergency system shutoff valve is open. Anti-skid protection is provided only in the "NORM" and "ALT" positions. The BRAKE SUP. selector switch receives 28-volt DC power from the isolated DC bus (figure 1-64) and the main DC bus No. 1 (figure 1-68).

PARKING BRAKE HANDLE. The brakes can be locked for parking purposes by using the brake handle located on the control pedestal. The parking brakes are set by fully depressing the brake pedals, pulling the brake handle, and then releasing the brake pedals. The parking brakes are released by fully depressing either set of brake pedals.

BRAKE PRESSURE INDICATORS. Two hydraulic brake pressure indicators, located adjacent to the BRAKE SUP. selector switch on the pilots' center instrument panel (figure 1-37), indicate pressure of the normal or alternate hydraulic system, whichever is selected for brake operation. Emergency brake pressure is indicated on the normal indicator when emergency brakes are selected. The indicators are graduated from 0 to 4,000 PSI in increments of 250 PSI. The indicators receive signals from pressure transmitters installed in the supply lines downstream of the No. 1 and No. 4 hydraulic shutoff valves (figure 1-41). The indicators receive 26-volt AC power from the AC instrument buses No. 1 and No. 4 (figures 1-65 and 1-66).

EMERGENCY HYDRAULIC BRAKE PRESSURE LIGHT. The EMER HYD brake pressure light, located adjacent to the BRAKE SUP. switch on the pilots' center instrument panel, will come on when pressure from the emergency accumulator is providing a minimum of 1,300 PSI, and the BRAKE SUP selector switch is in the "EMER" position. The light receives a signal from the pressure switch installed in the supply line downstream of the emergency system shutoff valve. The light receives 28-volt DC power from the isolated DC bus (figure 1-64).

Anti-Skid System.

A fail-safe anti-skid control system is installed to provide maximum braking efficiency for all types of runway conditions and to prevent locking of the braked wheels in the event excessive brake pressure is applied by the pilot during ground operation above approximately 15 knots. The anti-skid system is fully modulated with solid state, modular control circuitry. Each module receives skid detector signals from two wheels and independently controls the same pair of brakes through an anti-skid metering valve. When a skid detector senses an impending wheel skid, a signal is sent through the skid control box to the appropriate anti-skid metering valve. The anti-skid metering valve then directs an amount of metered pressure to the opposite end of the main metering valve spool causing a reduction in pressure applied to the pair of brakes. A failure of a modular skid control circuit will cause the release of braking pressure to the associated pair of brakes. Skid control malfunction of any pair of brakes will cause a DET FAILED light on the center instrument panel to come on. The anti-skid system incorporates complete built-in test features for ground and in-flight functional testing. The locked wheel protection circuit tests and anti-skid brake tests are performed at the anti-skid control panel on the center instrument panel and also at the anti-skid control box. The deceleration circuit test and the line replaceable unit fault isolation tests are performed with the BITE at the skid control box located in the cargo compartment close to the left main gear wheel well.

ANTI-SKID SWITCH. The anti-skid switch is located on the pilots' center instrument panel (figure 1-37). The "ON" position of the switch is effective only if the BRAKE SUP. selector switch is in the "NORM" or "ALT" position. When this condition is satisfied, the "ON" position arms the 28-volt DC anti-skid circuits. The "TEST ARM" position provides a means of testing the anti-skid system for proper operation. Placing the switch in the "TEST ARM" or "OFF" position with no braking pressure applied will cause a NO BRAKES light adjacent to the switch to come on. Depressing the brake pedals will cause the NO BRAKES light to go off and a BRAKES light to come on.

CAUTION

Do not perform any operation requiring anti-skid protection (take-off, landing or taxi) with the anti-skid switch in the "TEST ARM" position. To do so, will make available only partial anti-skid modulation. Any anti-skid signal will immediately dump brake pressure and then reapply the same pressure as being applied with the brake pedals. This sudden release and re-application of brake pressure could cause damage to the landing gear.

Each of these two lights is connected in series with the twelve pressure switches in the brake lines which supply the twelve pairs of brakes. If either light fails to come on, a malfunction of either a brake control valve (or valves) or a pressure switch (or switches) is indicated. Fault isolation to a pair of wheels may be achieved by using the BITE check at the anti-skid control box. When the switch is placed in "OFF" position, the anti-skid function of the brake system is inoperative. The anti-skid switch receives 28-volt DC power from the isolated DC bus and the main DC bus No. 1 and 26-volt AC power from the AC instrument bus No. 1 (figures 1-64, 1-66, and 1-68). The BRAKES and NO BRAKES lights both receive 28-volt DC power from the main DC bus No. 1 (figure 1-68).

ANTI-SKID TEST BUTTONS. Three anti-skid test buttons, located on the pilots' center instrument panel (figure 1-37), are used in conjunction with the "TEST ARM" position of the anti-skid switch to test the locked wheel protection portion of the anti-skid system when the brakes are applied. The "TEST ARM" position of the anti-skid switch provides a 400-cycle AC test signal which simulates a wheel spin-up signal. With this spin-up signal available, depressing the TEST 1 or TEST 2 button, sends the spin-up signal to one of the two control channels in each anti-skid control card. Since the other channel in each card is sensing a locked-wheel condition, the NO BRAKES light should come on, Depressing both TEST 1 and TEST 2 buttons at the same time sends a spin-up signal to both control channels in each anti-skid control card. In this condition, anti-skid brake application is properly indicated by the BRAKES light. The TEST 3 button is provided to test the over-voltage protection device in the anti-skid circuit. Proper operation of the over-voltage device is checked by eration of the over-voltage device is checked by placing the anti-skid switch to "TEST ARM," depressing the TEST 3 button and observing the ANTI-SKID OFF and BRAKES lights on.

ANTI-SKID OFF LIGHT. An ANTI-SKID OFF light, located on the pilots' center instrument panel (figure 1-37), comes on under any of the following conditions:

(1) ANTI-SKID switch is "OFF."

(2) BRAKE SUP switch is in "EMER."

(3) Loss of the two electrical power sources supplying the anti-skid control box.

(4) ANTI-SKID switch is in "TEST ARM," and the TEST 3 pushbutton is depressed.

The light receives 28-volt DC power from the isolated DC bus (figure 1-64).

ANTI-SKID DETECTOR FAILED LIGHT. The anti-skid DET FAILED light, located on the pilots' center instrument panel (figure 1-37), comes on when a skid control malfunction has occurred in one or more pairs of brakes which causes one or more pairs of wheels to free-wheel for more than 3 seconds. The DET FAILED light will not come on in flight. The light receives 28-volt DC power from the isolated DC bus (figure 1-64).

INFLIGHT TIRE DEFLATION SYSTEM.

The main landing gear wheels are equipped with a deflation system which allows the tires to be deflated in flight to a pre-selected pressure. An electrically operated solenoid valve is installed in each main landing gear wheel hub. These valves are controlled by a single switch on the flight engineer's console. When energized, the valves open to allow air to escape from the tire until a pre-set tire pressure of 70 to 120 PSI is reached. A safety valve is provided in each wheel to prevent deflation of the tire below 50 PSI in the event a solenoid valve fails in the open position.

Tire Deflation Switch and Light.

A tire deflation switch (figure 1-42) is located on the flight engineer's console. Placing the switch to "ON" provides power to open all tire deflation solenoid valves and to turn on the DEFLATE light adjacent to the switch. Placing the switch to "OFF" removes power from the deflation valves causing them to close. To turn off the DEFLATE light, the switch must be placed momentarily to "LT RESET." The tire deflation system solenoid valves, DEFLATE switch, and light receive 28-volt DC power from the main DC bus No. 2 (figure 1-67).

Tire Deflation Manual Valve.

A tire deflation manual valve is installed in the hub of each main landing gear wheel and is graduated from 70 to 120 PSI. The valve is manually preset prior to flight to select the pressure to which the tires will be deflated prior to landing.

FLIGHT CONTROL SYSTEM.

ROLL CONTROL.

Roll control is provided by five flight spoilers on each wing which are operated differentially in conjunction with two conventional ailerons (figure 1-43).

AILERONS.

Each aileron is powered by two hydraulic actuators served by a dual hydraulic servo control assembly. The left aileron servo control assembly is powered by hydraulic systems 1 and 2 and the right aileron servo control assembly is powered by systems 2 and 4. The pilot's control wheel is attached by cables to a forward quadrant located under the flight deck floor. The forward quadrant is connected by a cable system to a rear quadrant located on the wing rear spar and then through an aileron/spoiler mixer box to an input quadrant located near the left aileron. The aileron input quadrant is attached through mechanical linkages to the aileron servo control assembly. The copilot's control wheel is connected by a cable system to the right aileron servo control assembly in a manner similar to the pilot's. The pilot's and copilot's forward quadrants are joined by an interconnect rod which incorporates a shear pin. The aft quadrants are joined in a like manner. Pilot or copilot control wheel inputs are transmitted by the aileron cable system to their respective aileron and by the interconnect rods to the opposite aileron. Thus both pilot and copilot have direct control of both ailerons. Should a jam occur in either aileron system, an excessive control wheel force will shear both interconnect rod pins and permit use of the operating aileron. Maximum aileron travel corresponding to a 65-degree control wheel rotation in either direction is 25 degrees up and 15 degrees down.

Control Wheel.

The pilot's and copilot's control wheels (figure 1-44) are of the conventional type. Maximum control wheel rotation is 65 degrees either side of center.

Aileron Hydraulic Power Switches.

Four aileron hydraulic power switches, two for the left aileron and two for the right aileron, are located on the pilot's overhead console (figure 1-45). The LEFT AILERON power switches control the flow from hydraulic systems 1 and 2 to the left aileron hydraulic servo control assembly. The RIGHT AILERON POWER switches control the flow from hydraulic systems 2 and 4 to the right aileron hydraulic servo control assembly. When a switch is in "NORM," the associated hydraulic shutoff valve in the selected aileron servo control assembly is providing pressure for operation of one actuator of the aileron. When a switch is in "OFF," the associated hydraulic system shutoff valve in the selected aileron servo control assembly is closed. The aileron hydraulic shutoff valves and switches receive 115-volt AC power from the forward main AC buses No. 1, No. 2, No. 3, and No. 4 (figures 1-65 and 1-66).

Aileron Hydraulic System Off Lights.

Four aileron hydraulic SYS OFF lights, two for the left aileron and two for the right aileron, are located on the pilot's overhead console (figure 1-45). The left aileron hydraulic SYS OFF lights are marked SYS 1 OFF and SYS 2 OFF and the right aileron lights are marked SYS 2 OFF and SYS 4 OFF. A light comes on when the indicated hydraulic system pressure in the indicated aileron servo control assembly drops below 1,450 (±200) PSI. The SYS 2 OFF light receives 28-volt DC power from the main DC bus No. 2 (figure 1-67) and the SYS 1 OFF and SYS 4 OFF lights receive 28-volt DC power from the main DC bus No. 1 (figure 1-68).

Aileron Power Light.

An AILERON POWER light, located on the annunciator panel (figure 1-128), comes on when the pressure of either hydraulic system in either aileron power package drops below 1,450 (±200) PSI.

AILERON TRIM.

An electromechanical actuator is located in the input linkage of each aileron servo such that it is in series with the control wheel input system. A pilot-initiated trim command energizes the actuators which in turn position the aileron servo input linkages to deflect the ailerons in the commanded direction. Trim range is 10 degrees up and down.

Aileron Trim Selector Switch.

An aileron trim selector switch is located on the control pedestal (figure 1-45). Placing the switch to "LEFT HAND ONLY," "RIGHT HAND ONLY," or "BOTH" selects the left aileron only, the right aileron only, or both ailerons to receive trim command inputs.

Aileron Trim Knob.

An aileron trim knob, located on the control pedestal figure 1-45) is spring-loaded to the center OFF position. Holding the knob in the "LOWER LEFT WING" or "LOWER RIGHT WING" position supplies power to both aileron electric actuators to move the ailerons in the commanded direction. The aileron trim knob and trim actuators receive 115-volt AC power from the forward main AC buses No. 2 and No. 3 (figures 1-65 and 1-66).

Aileron Trim Slide Bar.

A slide bar, located in the center of the aileron trim knob, is provided to test for ground and power faults in the aileron trim circuits. Sliding the bar to the "HOT" position interrupts power to both aileron trim actuators. Sliding the bar to the "GRD" position interrupts ground to both actuators.

Aileron Trim Indicator.

An aileron trim indicator, located on the pilot's center instrument panel (figure 1-45) is provided to indicate the trimmed position of each wing. The two indicator needles, one marked R (right wing), and the other marked L (left wing) indicate the relative trimmed position of the respective wing. Input signals to the indicator are from the left and right trim position transmitters mounted on the left and right aileron trim actuators. The aileron trim indicator and position transmitters receive 115-volt AC power from the forward main AC bus No. 3 (figure 1-65).

Aileron Centering Procedure.

On 68304, 68307, 70167, 70168, and 70170 through 00460 not modified by T.O. 1334, the ailerons can be centered from the uprigged position, in flight, as follows:

1. Aileron Trim Selector Switch - RIGHT HAND ONLY
2. Aileron Trim Knob - LOWER LEFT WING

While maintaining lateral attitude with the control wheel, hold the trim knob in LOWER LEFT WING until the ail trim R wing indicator moves to 0 degrees.

3. Aileron Trim Selector Switch - LEFT HAND ONLY
4. Aileron Trim Knob - LOWER RIGHT WING

While maintaining lateral attitude with the control wheel, hold the trim knob in LOWER RIGHT WING until the ail trim L wing indicator moves to 0 degrees.

5. Aileron Trim Selector Switch - BOTH

Retrim the ailerons as necessary for wings level.

On 00461 and up and airplanes modified by T.O. 1334, the ailerons can be centered from the uprigged position, in flight, as follows:

1. LDCS Arming Switch - ARM
2. LDCS Switch - DN RIG

Place and hold the LDCS switch to the DN RIG position until the aileron trim indicators read approximately 6 degrees L WING UP and R WING UP.

3. LDCS Arming Switch - OFF
4. Ailerons - TRIMMED

Normal aileron trim may have to be applied to produce a wings level (hands off) attitude.

LIFT DISTRIBUTION CONTROL SUBSYSTEM (LDCS).

On 00461 and up and airplanes modified by T.O. 1334, a lift distribution control subsystem (LDCS) is installed to provide reduction of the inboard wing bending moment and to increase the wing fatigue life by uprigging both ailerons.

The initial uprigging is accomplished by mechanically changing the neutral position of the aileron surface to six degrees above the normal wing faired position.

In addition, a control system is provided, separate from the normal aileron trim system, to move the ailerons simultaneously in the same direction.

The pointers on the aileron trim position indicator will be positioned to zero degrees for all normal takeoffs and landings, and for climb and cruise at altitudes above 20,000 feet unless atmospheric turbulence is encountered. The two pointers will be positioned to six degrees wing down (uprig) at altitudes below 20,000 feet with the flaps retracted, during climb and cruise in atmospheric turbulence above this altitude, and during descent.

To reduce drag to a minimum, in case of engine failure or when a three-engine ferry mission is to be accomplished, the ailerons should be returned to the faired position. This is accomplished by downrigging the ailerons with the LDCS switch until the pointers on the aileron trim position indicator reach the six-degree WING UP position.

The LDCS receives 115-volt AC power from the forward main AC busses No. 2 and No. 3 (figures 1-66 and 1-65).

LDCS Controls.

Controls for the LDCS are located on the center console cover (figure 1-45) and consist of the following:

LDCS ARMING SWITCH. A guarded, two-position LDCS arming switch is used to arm the system. Placing the switch to "ARM" electrically arms the LDCS switch. Placing the switch to OFF (down) electrically isolates the LDCS switch.

LDCS SWITCH. A three-position, momentary, lever-lock LDCS switch is used to uprig or downrig the ailerons. The switch is active only when the LDCS arming switch is placed to "ARM." When the LDCS switch is placed and held in the "UPRIG" position, both the left-hand and right-hand aileron trim actuators run simultaneously toward the aileron up position (WING DN on the aileron trim indicator). Holding the switch in the "DN RIG" position drives the left-hand and right-hand aileron trim actuators simultaneously toward the aileron down position (WING UP on the aileron trim indicator). Releasing the switch to the spring-loaded center (OFF) position at any point in uprig or downrig travel stops the actuators. The normal limit travel stops (±10 degrees) in the aileron trim motors remain unchanged.

AILERON TRIM INDICATOR. Whenever the LDCS is operated, the result will be indicated by movement of both pointers in the same direction on the aileron trim indicator. The desired aileron position for operation below 20,000 feet with the flaps up, for climb and cruise in atmospheric turbulence above this altitude, and for descent, is indicated by a green triangular marking on the outside face of the indicator at each of the six-degree wing down calibrations.

SPOILERS.

There are nine spoiler panels on the upper surface of each wing. For the purpose of identification, the spoiler panels are numbered 1 through 9 from the fuselage outward. Five outboard flight spoilers on each wing are used full time in conjunction with the ailerons to provide roll control. Each flight spoiler panel is powered by a tandem hydraulic actuator which utilizes hydraulic pressure from two separate hydraulic systems. See figure 1-43 for information on which hydraulic systems supply power to the various flight spoiler actuators. Two mixing boxes, one located in each wing, are used to connect the aileron cable system in the wing to its associated flight spoiler system. Roll inputs from the aileron cable system are transmitted through the mixing box to the flight spoiler quadrants. Each spoiler quadrant is connected to its spoiler actuator servo by a pushrod. Since the mixing boxes are located outboard of the pilot's forward and aft aileron quadrants, the loss of an aileron due to a jam and broken shear pins will also result in loss of the associated flight spoiler system. However, control of the aileron and flight spoilers on the opposite wing will be normal.

Flight Spoiler Hydraulic Power Switches.

Four flight spoiler hydraulic power switches, two for the left-hand flight spoilers, and two for the right-hand flight spoilers are located on the pilot's overhead console (figure 1-45). One switch for each side is marked SYS A and the other switch for each side is marked SYS B. Each switch has positions "NORM" and "OFF." Each SYS A switch controls the flow of pressure of one hydraulic system to each actuator in the respective wing. Each SYS B switch controls the flow of pressure of the other hydraulic system to each actuator in the wing. Thus, if a SYS A switch is placed to "OFF," all flight spoiler actuators in the associated wing will be receiving pressure from only one hydraulic system. If both the SYS A and SYS B switches on one side are placed to "OFF," the spoiler actuators in that wing will be inoperative and if in flight, will allow the spoilers to float up. The switches receive 115-volt AC power from the aft main AC buses No. 1, No. 2, No. 3 and No. 4 (figure 1-70).

Flight Spoiler Hydraulic System Off Lights.

Twenty flight spoiler hydraulic SYS OFF lights, ten for the left-hand flight spoilers and ten for the right-hand flight spoilers, are located on the pilot's overhead console (figure 1-45). A light comes on when pressure of the hydraulic system indicated on the light has dropped below 1,450 (±200) PSI in the spoiler hydraulic actuator. Adjacent pairs of lights indicate the pressure of the two hydraulic systems supplying a single spoiler actuator. The top adjacent pair of lights on either side are for the outboard spoiler actuators. The bottom adjacent pair of lights on either side are for the inboard spoiler actuators. The lights receive 28-volt DC power from the main DC buses No. 1 and No. 2 (figures 1-67 and 1-68).

Spoiler Power Light.

A SPOILER POWER light, located on the annunciator panel (figure 1-128), comes on when the pressure of either hydraulic system in any spoiler actuator drops below 1,450 (±200) PSI.

SPOILER RATIO SHIFTER.

A spoiler ratio shifter is incorporated in each mixing box. Each ratio shifter consists of an electromechanical actuator and a series of cams and linkages. When the flaps are up, maximum deflection of the flight spoilers in response to full control wheel rotation is 22.5 degrees. When the flaps are extended beyond approximately 80 percent, the ratio shifter actuator is energized to automatically extend all flight spoilers 3 degrees. Since all flight spoilers are extended symmetrically 3 degrees, no roll maneuver will result. This ratio shift also changes the ratio of control wheel input to spoiler deflection. In the shifted configuration, maximum spoiler deflection is 60 degrees in response to full control wheel rotation. In the shifted configuration, a roll command will cause the flight spoiler on the up-going wing to retract to the closed position.

Spoilers Ratio Shifter Switches.

Two SPOILERS RATIO SHIFTER switches, one for the left spoilers and one for the right spoilers, are located on the pilot's overhead console (figure 1-45). In the "AUTO" position, the ratio shifter actuator is

energized when the flaps are lowered past approximately 80 percent to provide a maximum spoiler deflection of 60 degrees in response to full control wheel rotation. When the flaps are retracted less than approximately 80 percent, the ratio shifter actuator is again energized to limit spoiler deflection to 22.5 degrees in response to full control wheel rotation. When a spoiler ratio shifter switch is in the "FLAPS DOWN" position, the flap position signal is overridden and the spoilers have a 60-degree deflection capability regardless of flap position. When a switch is in the "FLAPS UP" position, the spoilers are limited to 22.5 degrees maximum deflection regardless of flap position. The spoiler ratio shifter actuators and switches receive 115-volt AC power from the forward main AC buses No. 2 and No. 3 (figures 1-65 and 1-66).

Spoiler Ratio Shifter Lights.

Two SPOILERS RATIO SHIFTER lights, one each for the left and right ratio shifter, are located on the pilot's overhead console (figure 1-45). When either RATIO SHIFT light comes on, the associated ratio shifter actuator is not in the proper position with respect to flap setting. The lights receive 28-volt DC power from the main DC buses No. 1 and No. 2 (figures 1-67 and 1-68).

Ratio Shift Light.

A RATIO SHIFT LIGHT, located on the annunciator panel (figure 1-128) comes on when either the left or right ratio shifter actuator is not in the proper position with respect to flap setting.

PILOT ASSIST CABLE SERVO (PACS) ROLL.

The pilot assist cable servo (PACS) is an electromechanical torque motor attached to the pilot's rear aileron quadrant. The PACS is provided to assist the pilots in overcoming the control wheel breakout force. Electrical sensors in each control wheel detect the initial pilot effort and send a signal to the PACS. The PACS will then provide approximately 70 percent of the force required to overcome the total control wheel breakout force. Effort to overcome control wheel breakout force with PACS operable is approximately three pounds. Maximum output torque of the PACS, measured at the control wheel, is approximately 6 pounds.

Aileron Pilot Assist Cable Servo Switch.

A ROLL PACS switch is located on the pilot's overhead console (figure 1-45). Placing the switch to "NORM" supplies power for aileron PACS operation. Placing the switch to "OFF" disengages the PACS. The switch receives 28-volt DC power from the avionics DC bus No. 2 (figure 1-69).

PACS Roll Off Light.

A PACS ROLL OFF light, located on the annunciator panel (figure 1-128), comes on whenever the ROLL PACS switch is in the "NORM" position and the roll PACS is inoperative or when the ROLL PACS switch is placed to "OFF".

On airplanes modified by T.O. 1346, the light comes on any time the PACS becomes inoperative.

On airplanes not modified by T.O. 1346, the light will not come on if the autopilot is engaged. If the PACS becomes inoperative during autopilot operation, the light will not come on until the autopilot is disengaged.

AILERON ARTIFICIAL FEEL.

Artificial feel in roll control is provided by a combination artificial feel and centering spring which is attached to the pilot's rear aileron quadrant. The spring is preloaded to a force which is adequate to overcome system friction, thus ensuring positive control wheel centering. Additional artificial feel is obtained from the flight spoiler closing springs attached to each No. 9 flight spoiler quadrant.

PITCH CONTROL.

Pitch control is provided by four elevator surfaces hinged at the rear of the horizontal stabilizer. Full elevator authority is 25 degrees up and 15 degrees down. Pitch trim is provided by a movable horizontal stabilizer (figure 1-46).

ELEVATORS.

The two inboard elevator surfaces are each powered by two hydraulic actuators served by a dual hydraulic servo control assembly (figure 1-46). Hydraulic system 2 powers one actuator in each elevator surface, and hydraulic system 3 powers the other actuator in each elevator surface. The two outboard surfaces are each powered by three hydraulic actuators. Two of these actuators in each outboard surface are served by a dual servo control assembly. The third actuator in each surface is served by a single servo control assembly. Hydraulic system 1 powers one actuator in each surface, hydraulic system 2 powers the second actuator in each surface, and hydraulic system 3 powers the third actuator in each surface. The pilot's control column is attached by a push rod to a forward quadrant. This quadrant, which also functions as an elevator cable tension regulator, is connected by a cable system to a rear quadrant located in the horizontal stabilizer. Two separate cable systems connect the pilot's rear quadrant to the two input quadrants, one located near each inboard elevator hydraulic servo control assembly. Each input quadrant is

connected to its servo control assembly by a mechanical linkage. The copilot's control column is connected by a cable system to the outboard elevator hydraulic servo control assemblies in a manner similar to the pilot's. The pilot's and copilot's forward quadrants are joined by an interconnect rod which incorporates a 180-pound shear pin. The aft quadrants are joined by an interconnect rod incorporating a 40-pound shear pin. Pilot or copilot control column inputs are transmitted by the elevator cable system to the respective symmetric pair of elevator surfaces, and by the interconnect rods and cable systems to the other pair of elevator surfaces. Thus, both pilot and copilot have control of inboard and outboard elevators. Should a jam occur in one elevator surface or in a symmetric pair of elevator surfaces, a 180-pound force on the control wheel will shear both interconnect rod pins, permitting use of the operating elevators.

Elevator Hydraulic Power Switches.

Seven elevator hydraulic power switches, three for the outboard elevators and four for the inboard elevators, are located on the pilot's overhead console (figure 1-45). Each OUTBD ELEVATOR power switch controls the flow of one hydraulic system to two servo control assemblies, one in each outboard elevator. The top switch controls hydraulic system No. 1 pressure, the center switch controls hydraulic system No. 2 pressure, and the bottom switch controls hydraulic system No. 3 pressure. Each of the four inboard elevator actuators is controlled by a separate power switch.

Note

The following discussion pertains to individual switches. However, all switches function in the same manner.

Placing the LEFT INBD ELEVATOR system 2 switch to "OFF," closes the shutoff valve for the system 2 actuator in the left inboard elevator. Placing the OUTBD ELEVATOR system 2 switch to "OFF" closes the shutoff valves for the system 2 actuators in each outboard elevator. Placing these switches to "NORMAL" opens the respective system shutoff valves, supplying pressure for operation of the actuators. The elevator shutoff valves and switches receive 115-volt AC power from the forward main AC buses No. 1, No. 2, No. 3, and No. 4 (figures 1-65 and 1-66).

Elevator Hydraulic System Off Lights.

Ten elevator hydraulic SYS OFF lights, six for the outboard elevators and four for the inboard elevators, are located on the pilot's overhead console (figure 1-45). The outboard elevator hydraulic SYS OFF lights are marked SYS 1 OFF, SYS 2 OFF, and SYS 3 OFF, and the inboard elevator lights are marked SYS 2 OFF and SYS 3 OFF. A light comes on when the pressure of the indicated hydraulic system in the indicated elevator actuator is below 1,450 (±200) PSI. The lights receive 28-volt DC power from the main DC buses No. 1 and No. 2 (figures 1-67 and 1-68).

Elevator Power Light.

An ELEVATOR POWER light, located on the annunciator panel (figure 1-128), comes on when hydraulic pressure in any of the elevator hydraulic actuators falls below 1,450 (±200) PSI.

PITCH TRIM SYSTEM.

Pitch trim is provided by a fully movable horizontal stabilizer (figure 1-47). The rear spar of the stabilizer is attached to a pivot point and trim is accomplished through angular rotation of the stabilizer about the pivot point. On 00461 and up and airplanes modified by T.O. 1353, full trim authority with flaps up is 6 degrees airplane nose up (stabilizer leading edge down) and 2.7 degrees airplane nose down (stabilizer leading edge up). On 68304, 68307, 70167, 70168, and 70170 through 00460 not modified by T.O. 1353, full trim authority with flaps up is 6 degrees airplane nose up (stabilizer leading edge down) and 1.5 degrees airplane nose down (stabilizer leading edge up).

On 00461 and up and airplanes modified by T.O. 1353, with landing flaps extended, full trim authority is 12 degrees airplane nose up and 2.7 degrees airplane nose down.

On 68304, 68307, 70167, 70168, and 70170 through 00460 not modified by T.O. 1353, with landing flaps extended or AERIAL REFUEL DOOR switch positioned to "OPEN," full trim authority is 12 degrees airplane nose up and 2.5 degrees airplane nose down.

Horizontal stabilizer movement is accomplished by a linear screw jack actuator which utilizes two separate hydraulic motors for actuation. The upper motor rotates the screw. The lower motor rotates a nut around the screw. Operation of either hydraulic motor will cause the screw to move vertically to effect stabilizer trim change. The screw drive motor utilizes power from hydraulic system No. 1 and is actuated by electrical signals from the autopilot, trim compensator, and from console-mounted alternate pitch trim switches. Trim rate of the screw drive motor is 0.15 degree per second. The nut drive motor receives power from the No. 2 hydraulic system and is actuated by electrical signals from the control wheel trim switches. The nut drive motor may also be controlled manually through a cable system by manual pitch trim handles. Nut drive trim rate is 0.5 degree per second with the AERIAL REFUEL DOOR switch positioned to "OPEN."

Normal Pitch Trim Switches.

Two pitch trim switches are located on the outboard grips of the pilots' control wheels (figure 1-44). The switches are recessed to provide a guard against inadvertent operation. These dual switches must be operated simultaneously to provide both power and ground to the electrically operated hydraulic solenoid valve in the stabilizer trim nut drive actuator. The circuitry is designed so that opposing signals from the pilot and copilot cancel each other. To initiate actuation of the nut drive actuator, the dual switches are pushed up for nose down trim and pushed down for nose up trim. The switches are spring-loaded to the unmarked center (OFF) position. Stabilizer trim rate is 0.5 degree per second with the AERIAL REFUEL DOOR switch positioned to "OPEN." Actuation of the switches to either position actuates an electrically operated hydraulic flow direction valve which ports fluid to the appropriate side of the nut drive hydraulic motor. The nut then rotates in proper direction to cause vertical movement of the screw jack and the stabilizer leading edge. The stabilizer trim switches receive 28-volt DC power from the main DC bus No. 1 (figure 1-68).

Alternate Pitch Trim Switches.

Two alternate pitch trim switches, with positions "NOSE UP" and "NOSE DOWN" are located on the control pedestal (figure 1-45). These switches must be operated simultaneously to provide both power and ground to the electrically operated hydraulic solenoid valve in the stabilizer trim screw drive actuator. To initiate actuation of the screw drive actuator, the dual switches are held forward for nose down trim and held aft for nose up trim. The switches are spring-loaded to the unmarked center OFF position. Stabilizer trim rate using these switches is 0.15 degree per second. Movement of the switches to either position actuates an electrically operated hydraulic flow direction valve which ports fluid to the appropriate side of the screw drive hydraulic motor. The screw then rotates in the proper direction to cause vertical movement of the screw and the horizontal stabilizer. The alternate pitch trim switches receive 28-volt DC power from the main DC bus No. 2 (figure 1-67).

Manual Pitch Trim Levers.

Two manual pitch trim levers are provided for trimming when the normal and alternate pitch trim systems are inoperative. The levers are located on either side of the control pedestal and are used to control manually the hydraulic flow direction valve in the horizontal stabilizer nut drive actuator. The levers are connected by a closed loop cable system to an input quadrant near the nut drive actuator. Actuation of trigger-type switches on either lever deenergizes a solenoid valve which allows fluid to be directed to the flow direction valve in the actuator assembly. Movement of the lever forward or aft then manually positions the flow direction valve to direct fluid to the appropriate side of the nut drive motor. On the ground if the airplane trim system is driven to the 1.5-degree stabilizer nose down limit, the manual trim will be deactivated and the alternate or normal system must be used to drive the stabilizer in the opposite direction. The motor will continue to run as long as the handle is held 1.5 inches out of the spring-loaded center OFF position which will allow horizontal stabilizer movement in excess of that limited by the normal and alternate systems. Releasing the switch stops the actuator. Trim rate using the levers is proportional to handle displacement. Maximum trim rate using the handles is 0.5 degree per second. The manual pitch trim lever switches receive 28-volt DC power from the isolated DC bus (figure 1-64).

Trim Disconnect Buttons.

A TRIM DISC button is located on the inboard grip of each control wheel (figure 1-44). Depressing either button energizes two relays which remove power from the normal and alternate pitch trim systems. After either button has been depressed, the only pitch trim command available is from the manual pitch trim levers.

Stabilizer Trim Reset Switch.

A STAB TRIM RESET switch, with momentary positions "NORMAL" and "ALTR" is located on the control pedestal (figure 1-45). The switch is used to reset the normal and/or alternate pitch trim circuits after they have been disconnected by actuation of a pitch trim disconnect button. Moving the switch to "NORMAL" resets the normal pitch trim circuits, and moving the switch to "ALTR" resets the alternate pitch trim circuits.

Alternate Pitch Trim Test Knob.

An ALT TRIM TEST knob is located on the control pedestal (figure 1-45). The knob is provided to test for proper operation of the alternate pitch trim system. The "TEST 1" position removes ground from the hydraulic shutoff valve and the "TEST 2" position removes the power from the valve. The "TEST 3" position directs power and ground to open the shutoff valve. Placing the alternate pitch trim switches to the "NOSE UP" or "NOSE DOWN" position, while the ALT TRIM TEST switch is in "TEST 1" or "TEST 2" position, should result in no horizontal stabilizer movement. In "TEST 3" there should be no horizontal stabilizer movement with the alternate pitch trim switches left in neutral.

Horizontal Stabilizer Trim Position Indicator.

A horizontal stabilizer trim position indicator located on the pilots' center instrument panel (figure 1-45), is graduated from 0 to 14 degrees nose up and 0 to 6 degrees nose down in 1-degree increments. A smaller dial, half of which is visible, is located on the right side of the position indicator face. This dial is geared directly to the indicator pointer and rotates clockwise (nose down), or counterclockwise (nose up) to indicate horizontal stabilizer movement. The horizontal stabilizer trim position indicator receives signals from the trim compensator position transmitter located in the vertical stabilizer. Power for operation of the transmitter and indicator is from the 115-volt forward main AC bus No. 4 (figure 1-65).

PILOT ASSIST CABLE SERVO (PACS) PITCH .

The pilot assist cable servo (PACS) is an electromechanical torque motor attached to the pilot's rear elevator quadrant. The PACS is provided to assist the pilots in overcoming the control breakout force. Electrical sensors in each control wheel detect the initial pilot effort and send a signal to the PACS. The PACS will then provide approximately 40 percent of the force required to overcome the total control breakout force. Effort to overcome control breakout force with PACS operable is approximately seven pounds.

Elevator Pilot Assist Cable Servo Switch.

A PITCH PACS switch is located on the pilot's overhead panel (figure 1-45). Placing the switch to "NORM" supplies power for elevator PACS operation. Placing the switch to "OFF" disengages the PACS. The switch receives 28-volt DC power from the avionics DC bus No. 2 (figure 1-69).

PACS Pitch Off Light.

A PACS PITCH OFF light, located on the annunciator panel (figure 1-128), comes on whenever the PITCH PACS switch is in the "NORM" position and the pitch PACS is inoperative or when the PITCH PACS switch is placed to "OFF".

On airplanes modified by T. O. 1346, the light comes on any time the PACS becomes inoperative.

On airplanes not modified by T. O. 1346, the light will not come on if the autopilot is engaged. If the PACS becomes inoperative during autopilot operation, the light will not come on until the autopilot is disengaged.

ELEVATOR ARTIFICIAL FEEL.

Artifical feel in the pitch axis is attained by three force producing components: bobweights, centering springs, and a variable feel unit. A feel and centering spring attached to the pilot's rear elevator quadrant, and centering springs mounted on the hydraulic power packages, provide an opposing control column force proportional to elevator deflection. The centering springs are preloaded to a force sufficient to ensure positive control column centering. The variable feel unit (VFU) is a hydro-mechanical device which applies an opposing control column force as a function of q (impact air pressure). The VFU consists of two identical assemblies, each connected by a common linkage to the copilot's forward elevator quadrant. Each assembly utilizes pitot and static air pressure to position a hydraulic actuator which applies force through the common linkage to the control column. Each assembly utilizes power from a separate hydraulic system and pitot system, and the two are connected together such that loss of either hydraulic system or either pitot system will not result in loss of the VFU. The bobweights and centering springs operate full time with no manual control. Separate elevator feel switches are provided in the cockpit for control of the VFU assemblies.

Elevator Feel Switches.

Two elevator feel switches, one for each variable feel unit (VFU) hydraulic system, are located on the pilot's overhead panel (figure 1-45). The left switch controls flow from hydraulic system 1 and the right switch controls flow from hydraulic system 4. When the switches are in the "NORM," the hydraulic shutoff valves are open, supplying hydraulic pressure to both VFU hydraulic actuators. Placing either feel switch to "OFF" closes the corresponding hydraulic shutoff valve. The elevator feel system shutoff valves and switches receive 115-volt AC power from the forward main AC buses No. 1 and No. 4 (figures 1-65 and 1-66).

Elevator Feel System Off Lights.

Two ELEVATOR FEEL SYS OFF lights, one for each VFU hydraulic system, are located on the pilot's overhead panel (figure 1-45). The light for either VFU system comes on when the hydraulic system pressure in the VFU assembly falls below 1,450 (±200) PSI. The lights receive 28-volt DC power from the main DC buses No. 1 and NO. 2 (figures 1-67 and 1-68).

Elevator Feel Light.

An ELEVATOR FEEL light, located on the annunciator panel (figure 1-128) comes on if there is a

malfunction causing a 20 percent control pressure differential between the dual outputs of the VFU assembly. Note that any illumination of the annunciator panel light not accompanied by the illumination of one of the two VFU system lights on the overhead panel indicates a fault not basically hydraulically oriented. Such a fault may be intermittent and on self-correction the light will go out.

DIRECTIONAL CONTROL.

Directional control is provided by a rudder system consisting of upper and lower rudder surfaces, (figure 1-48). Full rudder authority is 35 degrees either side of center.

RUDDERS.

Each rudder surface is powered by a dual-actuator hydraulic power package. The upper rudder receives power from the No. 1 and No. 3 hydraulic systems, and the lower rudder receives power from the No. 2 and No. 3 systems. The pilot's and copilot's rudder pedals are connected by a mechanical linkage to a forward quadrant located under the flight deck floor. This quadrant also serves as a rudder cable tension regulator. The forward quadrant is connected by a cable system to upper and lower input quadrants located in the vertical stabilizer. Each input quadrant is connected to its respective hydraulic power package by a pushrod which incorporates an override bungee. Both pilots have direct control of both rudders through a single cable system. There are no shear pins in the rudder control system. Each pushrod bungee is preloaded to a force of 30 pounds and has a total force of 75 pounds with the bungee spring fully compressed. If a rudder becomes jammed in any position, it will be immediately detectable since bungee spring force will maintain the rudder pedals in a position corresponding to rudder position. Spring force will have to be overcome to maintain a neutral rudder pedal position.

Rudder Pedal Adjustment Crank and Indicator.

A rudder pedal adjustment crank and indicator are provided for each set of rudder pedals. The pilot's and copilot's cranks and indicator are located directly below their respective instrument panels. Rotating the crank counterclockwise moves the rudder pedals aft and rotating the crank clockwise moves the pedals forward. The indicator pointer displays the relative position of the rudder pedals between full forward and full aft.

Rudder Hydraulic Power Switches.

Four rudder hydraulic power switches, two for the upper rudder and two for the lower rudder, are located on the pilot's overhead console (figure 1-45). The LOWER RUDDER switches control the flow from hydraulic systems 2 and 3 to the lower rudder hydraulic power package. The UPPER RUDDER switches control the flow from hydraulic systems 1 and 3 to the upper rudder hydraulic power package. Placing a switch to "OFF," closes the associated hydraulic system shutoff valve in the selected rudder power package. When these switches are in "NORM," the associated hydraulic shutoff valves are open. The upper and lower rudder shutoff valves and switches receive 115-volt AC power from the forward main AC buses No. 1, No. 2, No. 3, and No. 4 (figures 1-65 and 1-66).

Rudder Hydraulic System Off Lights.

Four rudder hydraulic SYS OFF lights, two for the lower rudder and two for the upper rudder, are located on the pilot's overhead console (figure 1-45). The lower rudder hydraulic SYS OFF lights are marked SYS 2 OFF and SYS 3 OFF and the upper rudder lights are marked SYS 1 OFF and SYS 3 OFF. The SYS OFF lights come on when the indicated hydraulic system pressure in the indicated rudder power package drops below 1,450 (±200) PSI. The lights receive 28-volt DC power from the main DC buses No. 1 and No. 2 (figures 1-67 and 1-68).

Rudder Power Light.

A RUDDER POWER light, located on the annunciator panel (figure 1-128), comes on when hydraulic pressure from system 2 or 3 to the lower rudder or from system 1 or 3 to the upper rudder falls below 1,450 (±200) PSI.

RUDDER STOP SYSTEM.

A rudder stop system is provided to prevent excessive vertical stabilizer loads resulting from excessive rudder deflection at high airspeeds. The system consists basically of a three-position electromechanical actuator which is operated by signals from the CADCs. The actuator is attached to the lower rudder

quadrant in such a manner that it controls the amount that the quadrant may rotate. Below 153 KCAS, the actuator is at one extreme position and the quadrant may rotate the full amount in either direction to provide full rudder deflection of 35 degrees either side of center. When airspeed reaches 153 KCAS, the CADCs provide a signal to the actuator causing it to move to the intermediate position. In this position, the actuator limits rudder quadrant rotation so that the maximum rudder authority is 12 degrees either side of center. When airspeed reaches 238 KCAS, the CADCs provide a signal to the actuator causing it to move to its other extreme position. In this position, the actuator limits rudder quadrant rotation so that the maximum rudder authority is 4 degrees either side of center. As airspeed decreases below 238 KCAS and 153 KCAS the reverse actions occur. A malfunction sensing circuit is provided in the rudder stop system to indicate when the rudder stop actuator is not in the position commanded by the CADCs. A time delay relay is provided in the circuit which allows sufficient time for the actuator to move to the commanded position before a malfunction is visually displayed to the pilot. The actuator receives 115-volt AC power from the isolated bus (figure 1-64).

Rudder Limit Switch.

A RUDDER LIM switch is located on the overhead panel (figure 1-45). In the "AUTO" position, the rudder stop actuator will automatically move in response to CADC signals to control rudder authority. The "MIN Q" position is used to override CADC signals and cause the actuator to move to the low-speed stop permitting full rudder control at any airspeed. The "TEST" position is used during ground checkout to bypass the time delay relay in the malfunction sensing circuit. Thus when checking the system with the CADC test switch, the RUDDER LIMIT annunciator light will come on the moment the CADC sends a signal and will go out when the rudder stop actuator reaches the proper position.

Rudder Minimum Q Light.

A rudder MIN Q light on the pilot's overhead panel (figure 1-43) comes on after the RUDDER LIM switch is placed to "MIN Q" and the rudder stop actuator moves to the proper position. The light receives 28-volt DC power through the RUDDER LIMIT CONT 1 from the main DC bus No. 2 (figure 1-67).

Rudder Limiter Light.

A RUDDER LIMITER light located on the annunciator panel (figure 1-128) comes on whenever the rudder stop actuator is not in the proper position as commanded by the CADC's.

EMERGENCY RUDDER CONTROL.

Emergency rudder control provides ±20 degrees of upper and lower rudder authority through control of the yaw augmentation system. Emergency control is provided for use in the event of a jam in the rudder cable system and may also be used for rudder trim in the event of trim actuator failure. Control of the emergency rudder system is by a switch and control knob mounted on the flight augmentation panel (figure 1-49).

RUDDER FEEL AND TRIM SYSTEM.

A combination feel and centering bungee, in series with an electromechanical trim actuator, is attached to the lower input quadrant. The bungee is preloaded to a force of approximately 8 pounds which will ensure positive system centering and will exert a maximum rudder pedal force of 100 pounds at full rudder pedal deflection. The trim actuator provides a parallel input to the rudder system by repositioning the neutral point of the feel bungee. Rudder trim is controlled by two console-mounted trim switches. Tee upper and lower rudder surfaces are trimmed simultaneously.

Rudder Trim Switches.

Two RUDDER TRIM switches are located on the control pedestal (figure 1-45). These switches must be operated simultaneously to provide both power and ground to the electrically operated rudder trim actuator. The dual switches are held left for nose left trim and held right for nose right trim. The switches are spring loaded to the unmarked center OFF position. The rudder trim switches and trim actuator receive 115-volt AC power from the forward main AC bus No. 2 (figure 1-66).

Rudder Trim Position Indicator.

A rudder trim position indicator, located on the pilots' center instrument panel (figure 1-45), is graduated from 0 to 12 degrees nose left and 0 to 12 degrees nose right. The indicator receives signals from a rudder trim position transmitter mounted on the rudder trim actuator. The indicator receives 115-volt AC power from the forward main AC bus No. 3 (figure 1-65).

AUTOMATIC FLIGHT CONTROL SYSTEM (AFCS).

The automatic flight control system (AFCS) consists of three independent subsystems. Each subsystem

has its own controls and indicators and independent modes of operation. These subsystems are the automatic flight control subsystem, trim compensator subsystem (On 68307, 70167, 70168 and 70170 thru 90027 not modified by T.O. 1091) and the go-around attitude subsystem.

AUTOMATIC FLIGHT CONTROL SUBSYSTEM.

The automatic flight control subsystem consists of the autopilot (A/P), automatic throttle subsystem (ATS), flight augmentation subsystem, and the pilot assist cable servo subsystem (PACS).

AUTOPILOT.

The autopilot provides a means of automatically controlling pitch and roll. In addition, it furnishes control intelligence to the yaw augmentation subsystem for additional lateral control during an ILS approach and runway alignment and rollout guidance during an automatic landing. The system is designed to follow enroute navigational and guidance intelligence signals; to perform automatic terrain following at a pre-selected terrain clearance; to perform automatic radar approaches; and to perform ILS coupled automatic landings including flare, touchdown and rollout along the runway.

Autopilot Controls and Indicators.

Controls and indicators for the autopilot are on the AFCS CONTROL panel (figure 1-49) located on the center console, on the pilot's and copilot's main instrument panels, and on the annunciator panel (figure 1-128). Autopilot disconnect switches are located on the pilot's and copilot's control wheels (figure 1-44). CWS is incorporated in the pilot's and copilot's control wheels.

CAUTION

Readability of legends in the lighted pushbutton control switches may be adversely affected under conditions of bright sunlight shining on these panels. Also, it is possible to inadvertently select the wrong mode of operation during turbulent flight conditions. Extreme care should be exercised in selecting and operating the proper switch under these conditions to prevent inadvertent selection of an unmonitored mode or the loss of a desired mode.

The autopilot receives 28-volt power from the avionics DC bus No. 1, 115-volt power from the avionics AC buses No. 1 and No. 2, and the navigation AC bus No. 2 (figure 1-69). Power sources for other AFCS subsystems are described elsewhere in this section.

The slew switches, on the AFCS control panel, allow the pilots to independently slew in a reference Mach number, airspeed and altitude on their respective instruments, when required, for manual or automatic control.

When power is applied to the airplane, the MACH HOLD/ADJ, ALT MAN, IAS HOLD/ADJ and MASTER POWER legend lights on these pushbuttons come on.

Illumination of these lights indicates that manual slewing of the VSFI's is available to the pilots. In the manual mode, each pilot has control of his VSFI's.

MACH HOLD/ADJUST PUSHBUTTONS. Two MACH HOLD/ADJ pushbuttons, one for each pilot, are used to allow slewing of the MACH VSFI's. Depressing the pushbutton causes the ON light on this pushbutton and the MACH light on the MACH-IAS pushbutton to come on. This allows slewing of the associated command Mach marker with the IAS-MACH REF switch. Disengagement of the MACH HOLD/ADJ puts the energy management analog computer (EMAC) command on the Mach marker.

Note

During ground check, the pilot must first depress the MACH/HOLD/ADJ pushbutton and then move the IAS-MACH REF switch to the "DECR" position momentarily to engage this mode. The minimum position to which the Mach reference indicator can be slewed is 0.2 Mach.

IAS-MACH REFERENCE SLEWING SWITCHES. Two IAS-MACH REF switches, one for each pilot, are used to slew a command Mach or airspeed value on the appropriate VSFI. The slow slew position of each switch is the first position fore or aft of the spring-loaded-to-center OFF position. The fast slew position is the second position fore or aft of the center OFF position.

MACH/IAS PUSHBUTTONS. Two MACH/IAS pushbuttons, one for each pilot, are used to switch from Mach slewing to IAS slewing or vice versa. If the MACH light is on, Mach slewing is available provided the MACH HOLD/ADJ pushbutton is depressed and its ON light is on. Depressing the MACH IAS pushbutton for IAS will provide IAS slewing provided the IAS HOLD/ADJ pushbutton is depressed and its ON light is on.

IAS HOLD/ADJUST PUSHBUTTONS. Two IAS HOLD/ADJ pushbuttons, one for each pilot, are used to allow slewing of the IAS VSFI's. Depressing the pushbutton causes the ON light on this pushbutton and the IAS light on the MACH-IAS pushbutton to come on. This allows slewing of the associated command IAS marker with the IAS-MACH REF switch. Prior to autothrottle engagement or pitch autopilot engagement in the IAS/Mach on pitch or altitude capture mode, the slew functions of the Mach or IAS indicators are independent. Disengagement of the IAS HOLD/ADJ pushbutton slews the IAS command marker to the fixed index line.

ALTITUDE MANUAL PUSHBUTTONS. Two ALT MAN pushbuttons one for each pilot, are used to allow slewing of the altitude VSFI's. Depressing the pushbutton causes the ON light to come on. Slewing of the associated command altitude marker with the ALT SEL REF switch can then be accomplished. Each pilot has control over his altitude command marker. Disengagement of the ALT MAN pushbutton slews the altitude command marker to the fixed index line.

ALTITUDE SELECT REFERENCE SLEWING SWITCHES. Two ALT SEL REF slewing switches, one for each pilot, are used to slew a command altitude on the appropriate VSFI.

MASTER POWER PUSHBUTTON. The MASTER POWER pushbutton controls the electrical power to the autopilot and autothrottle subsystem. When the MASTER POWER pushbutton is depressed, and engages, the ON light in the pushbutton comes on, and the ATS, PITCH and LATERAL lights come on. Master power pushbutton engagement is not necessary for manual slewing of the airspeed, Mach and altitude indicators.

PILOT/COPILOT PUSHBUTTON. The PILOT/COPILOT pushbutton is used to indicate and select which pilot has control of the following three slew functions: autothrottle slew, VSFI command Mach marker slew and VSFI command IAS marker slew. It is only available when the autothrottle is engaged or the autopilot IAS/MACH PITCH mode is engaged or the autopilot ALT CAPTURE mode is engaged.

Upon engagement of the autothrottle or specified autopilot mode operation, the PILOT light comes on indicating that the pilot has initial control of the three slew functions. If the COPILOT light is on (selected by depressing the PILOT/COPILOT pushbutton when the PILOT light is on), the copilot has control of the three slew functions. Control of these functions can be transferred by depressing the PILOT/COPILOT pushbutton to get the desired light to come on. The pilot in command will slew both IAS/Mach command markers.

AUTOPILOT PITCH PUSHBUTTON. A PITCH pushbutton is used to engage the basic autopilot pitch axis. Before the basic autopilot pitch axis can be engaged, the pitch augmentation system must be on, the MASTER POWER pushbutton ON light must be on. Depressing the PITCH pushbutton causes the ON light to come on indicating that the autopilot pitch axis is engaged.

AUTOPILOT PITCH WHEEL. The pitch wheel, located on the AFCS control panel, is used to vary the pitch attitude by rotating the wheel in the "DN" or "UP" positions. The pitch wheel is operative only in the attitude hold mode when no other autopilot pitch mode is selected. When the pitch CWS mode is engaged, stick force will override pitch wheel commands.

PITCH CONTROL WHEEL STEERING (CWS) PUSHBUTTON. The PITCH CWS pushbutton is used to arm or disable the pitch CWS mode. When the ON light in the pushbutton is on, the mode is armed for use. The CWS ON light will automatically come on upon initial engagement of the pitch axis of the autopilot. The CWS mode can be disabled by depressing the PITCH CWS pushbutton.

ALTITUDE HOLD PUSHBUTTON. An ALT HOLD pushbutton is used to initiate engagement of the autopilot altitude hold mode. Depressing the pushbutton causes the autopilot to hold the altitude existing when the mode is engaged. Mode engagement occurs when the ON light comes on.

IAS/MACH PITCH PUSHBUTTON. An IAS/MACH PITCH pushbutton is used to engage the autopilot indicated airspeed hold and adjust mode or the autopilot Mach hold and adjust mode. In these modes, the autopilot will hold the command airspeed or Mach by changing pitch attitude. Selection initially engages the IAS HOLD/ADJ mode (on light comes on) and the existing airspeed is held by the autopilot. If the autothrottle system was engaged, it will automatically disengage. After initial mode engagement, either the MACH HOLD/ADJ or the IAS HOLD/ADJ mode may be selected as desired.

ALTITUDE CAPTURE PUSHBUTTON. An ALT CAPTURE pushbutton is used to arm the autopilot altitude capture mode.

VERTICAL NAVIGATION PUSHBUTTON. A VERT NAV pushbutton is used to initiate engagement of the VERT NAV mode. For mode engagement, one of the following navigation aids must be set up and operating: Terrain Following, Radar Approach, Vertical Navigation, ILS-1 or ILS-2. With a vertical nav mode engaged, coupled CWS is available, if selected.

AUTOPILOT LATERAL PUSHBUTTON. The LATERAL pushbutton on the AFCS control panel is provided to engage the basic autopilot roll axis. Before the roll axis can be engaged, the lateral and yaw augmentation must be on and operational, master power must be on, the turn knob must be in

the detent (center) position and the force on the aileron control wheel must be less than two pounds. Engagement of the roll axis will be indicated by the ON legend in the LATERAL pushbutton coming on.

ROLL CONTROL WHEEL STEERING (CWS) PUSHBUTTON. A ROLL CWS pushbutton is used to give the pilots roll CWS. If the ON light is on, depressing the pushbutton disengages the roll CWS and the ON light goes off. Re-engagement requires the ROLL CWS pushbutton to be depressed again. Roll CWS engages automatically when the lateral axis is engaged.

TURN KNOB. A rotary TURN knob may be used to bank the airplane when the basic lateral mode is engaged. After the LATERAL pushbutton has been depressed and the pushbutton ON legend comes on, the TURN knob may be rotated to bank the airplane to an amount proportional to the displacement of the TURN knob. Use of the turn controller disengages or locks out all other lateral axis modes.

HORIZONTAL NAVIGATION PUSHBUTTON. The HORIZ NAV pushbutton is used to couple the autopilot lateral axis to one of the lateral navigation modes. With the autopilot lateral axis engaged, depressing the HORIZ NAV pushbutton will arm the horizontal navigation mode selected on the pilots' nav select panel and the ON legend in the pushbutton will come on. Should the mode fail to arm or engage, the AUTO caution and HORIZ NAV OFF annunciator lights will come on with the ON light in the pushbutton.

AUTOMATIC LANDING PUSHBUTTON. An AUTO LAND pushbutton is used to engage the automatic landing mode.

AUTOTHROTTLE PUSHBUTTON. The AUTO THROT pushbutton is used to engage the direct throttle control mode. Depressing the pushbutton allows engagement of any autothrottle mode after the ON light comes on. The direct throttle mode can now be used to provide remote control of the throttles by positioning them through the slewing operation of the IAS MACH REF switches.

ALPHA HOLD PUSHBUTTON. An ALPHA HOLD pushbutton is used to engage the angle-of-attack hold mode. When the ALPHA HOLD pushbutton is depressed, and the ON light comes on, the angle-of-attack existing at that time will be maintained through automatic throttle control.

AUTOPILOT DISCONNECT PUSHBUTTONS. Two A/P DISC pushbuttons (figure 1-44), one on each pilot's control wheel, are used for normally disconnecting the autopilot. Depressing either pushbutton, when the autopilot is engaged, disconnects the autopilot.

Auto Caution and Annunciator Lights.

The AFCS AUTO caution lights are located on each pilot's instrument panel (figures 1-9 and 1-11) and the AFCS annunciator lights are located on the pilots' annunciator panel (figure 1-128). The description and function of the AUTO lights are as follows:

AUTOPILOT PITCH OFF LIGHT. THE A/P PITCH OFF light comes on to indicate that an abnormal disengagement of the autopilot pitch axis has occurred.

AUTOPILOT ROLL OFF LIGHT. The A/P ROLL OFF light comes on to indicate that an abnormal disengagement of the autopilot roll axis has occurred.

AUTOPILOT YAW OFF LIGHT. The A/P YAW OFF light comes on to indicate that an abnormal disengagement of the autopilot yaw axis has occurred.

FLARE INOPERATIVE LIGHT. The FLARE INOP light comes on to indicate that a fault exists in one or more of the three flare computations in the autopilot flare coupler.

AUTOMATIC THROTTLE LIGHT. The AUTO THROTTLE light comes on to indicate that an automatic disengagement of the ATS has occurred.

VERTICAL NAVIGATION OFF LIGHT. The VERT NAV OFF light comes on to indicate that the vertical navigation mode is enabled on the AFCS control panel, but that no appropriate autopilot modes are armed or engaged.

HORIZONTAL NAVIGATION OFF LIGHT. The HORIZ NAV OFF light comes on to indicate that the horizontal navigation mode is enabled on the AFCS control panel but that no appropriate autopilot modes are armed or engaged.

NOSE LOCALIZER ANTENNA OFF. The NOSE LOC ANT OFF light comes on to indicate that automatic switching from the tail antenna to the nose antenna did not occur.

AUTOPILOT TRIM FAULT LIGHT. The AUTO TRIM FAULT light comes on to indicate abnormal operation of the automatic stabilizer trim system.

AUTOLAND LIGHT. An AUTOLAND light above the pilot's and copilot's ADI indicates completion of the autoland approach test. During this test, the automatic disengage monitoring system is tested to assure that a fault has not occurred that might disable the automatic disengage function during an autoland approach and landing.

Autopilot Modes of Operation.

Note

Inadvertent or intentional manual stabilizer trim inputs with the control wheel trim switches, alternate pitch trim switches, or manual pitch trim lever will disengage the pitch autopilot but the A/P PITCH OFF light does not come on.

ATTITUDE HOLD. The pitch attitude hold mode is the primary mode of control in the pitch axis. This mode automatically becomes available when the PITCH pushbutton on the AFCS panel is depressed. This mode automatically stabilizes the airplane with respect to the gyro attitude existing at the time pitch mode engagement occurs. While in this mode, the pitch attitude can be changed by rotating the autopilot pitch wheel on the AFCS panel to the "UP" or "DN" position.

The roll attitude hold mode is the primary mode of lateral control and automatically becomes available when the LATERAL pushbutton on the AFCS panel is depressed. If the existing bank angle is less than 7 degrees, the autopilot will roll the airplane to a wings level attitude and hold the heading existing at the time of engagement. This action occurs provided that no lateral force is being applied to the control wheels. The autopilot will control the airplane to hold the existing bank angle if it is greater than seven degrees at the time the roll attitude hold mode engages. While in this mode, the roll attitude can be changed by rotating the TURN knob on the AFCS control panel (maximum bank angle of 35 degrees).

CONTROL WHEEL STEERING (CWS). Rate CWS is a basic mode and is automatically available when the PITCH or LATERAL pushbuttons are depressed and the autopilot becomes engaged. Separate switches are provided on the AFCS panel to disengage this mode if desired. These switches are the PITCH CWS and the ROLL CWS pushbuttons. Maneuvering in pitch and roll can be accomplished by applying a force to the pilot's or copilot's control wheel in the appropriate direction. The pitch and roll attitude rate of change will be proportional to the applied force. In pitch, the attitude existing at the time a force is removed will be the reference attitude which is to be held by the autopilot. In roll, if the bank angle is less than seven degrees, the autopilot controls the airplane to a wings level attitude and holds the heading existing when the force is removed. If the bank angle is greater than seven degrees, the autopilot holds the existing bank angle when the force is removed.

The coupled control wheel steering mode is automatically available when appropriate navigation/guidance modes are engaged. Coupled CWS provides pitch and roll attitude displacement proportional to the applied force on the pilot or copilot control wheel. This allows the operator to superimpose control wheel steering commands over those of external guidance commands.

ALTITUDE HOLD. Selection of this mode is accomplished by depressing the ALT HOLD pushbutton on the AFCS panel when the autopilot pitch axis is engaged. The altitude existing when this mode is selected is the reference altitude about which the airplane is held. Variations from the reference altitude cause the autopilot to pitch the airplane in the direction to return to the reference altitude. The pilots can monitor the performance of the autopilot by observing the altitude VSFI's. In this mode, the autopilot receives control data in the form of altitude rate, and altitude error signals from the CADC No. 1.

When this mode is engaged, the pitch wheel is inoperative and the PITCH CWS pushbutton ON light goes off. Disengaging the altitude hold mode causes the PITCH CWS pushbutton ON light to come on, provided the PITCH CWS mode has not been previously disengaged.

IAS/MACH ON PITCH. Depressing the IAS/MACH PITCH pushbutton, initially engages the IAS hold mode. After mode initiation, the following occurs:

(1) The pilot's and copilot's IAS command marker automatically slew to the fixed index line and the ON light of the pilot's IAS HOLD/ADJ pushbutton and the IAS light on the pilot's MACH/IAS pushbutton come on indicating mode engagement.

(2) The ON light on the MACH HOLD/ADJ pushbutton goes off, if on.

(3) The autopilot receives IAS error signals from the pilot's and copilot's IAS indicator.

(4) The pilot transfer pushbutton shows which pilot has control of IAS slewing. Pilot will be initially indicated.

(5) The pitch wheel is inoperative and the ON light of the PITCH CWS pushbutton is off.

(6) The autopilot holds the reference IAS.

The reference IAS can be changed by slewing the command IAS marker by using the IAS MACH REF slewing switch.

During the slewing operation, the airplane will change its pitch attitude to increase or decrease the IAS as required.

Note

The slow slew rate should be used to prevent uncomfortable attitude changes.

Transfer to the Mach hold and adjust mode is accomplished by depressing the MACH HOLD/ADJ pushbutton. After mode initiation, the following occurs:

(1) The IAS mode automatically resets and the IAS markers synchronize to the index line. The Mach markers slew to the index line and the ON light in the pilot's MACH HOLD/ADJ pushbutton and the MACH light of the MACH/IAS pushbutton come on indicating mode engagement.

(2) The ON light on the IAS HOLD/ADJ pushbutton goes off, if on.

(3) The autopilot receives Mach error signals from the pilot's and copilot's Mach indicator.

(4) The pilot transfer pushbutton shows which pilot has control of Mach slewing.

(5) The pitch wheel is inoperative and the ON light on the PITCH CWS pushbutton is off.

(6) The autopilot holds the reference Mach.

The reference Mach can be changed by slewing the command Mach marker by using the IAS MACH REF slewing switch.

During the slewing operation, the airplane will change its pitch attitude to increase or decrease the Mach number as required.

Note

The slow slew rate should be used to prevent uncomfortable attitude changes.

ALTITUDE CAPTURE. The altitude capture mode is used when automatic capture of a pre-selected altitude is desired.

The altitude capture mode uses signals from the altitude VSFI command marker and altitude rate from CADC No. 1 to command a smooth round-out to the selected altitude. When the selected altitude is attained, the autopilot will automatically switch to the altitude hold mode. Prior to arming altitude capture, the aimpoint altitude must be selected on the controlling VSFI (dependent upon the PILOT/COPILOT transfer switch). Since the transfer switch initially comes on in the PILOT mode, the pilot's altitude marker must be displaced from the existing altitude in the direction of the aimpoint altitude, or the system will immediately transfer to altitude hold. Climb or descent to the aimpoint altitude may be accomplished utilizing any desired pitch mode.

When the mode is armed by depressing the ALT CAPTURE pushbutton, the autopilot will retain the prior pitch mode until the computed flare point is reached, at which time the prior pitch mode will disengage and round-out to the selected altitude starts. When the selected altitude is reached, the ON light in the ALT CAPTURE pushbutton will go off and the ON light in the ALT HOLD pushbutton comes on.

Note

Slewing to a new altitude while in the round-out will result in an abrupt pitch maneuver.

Coupled pitch CWS may be used during the altitude capture round-out maneuver if desired. The autopilot pitch wheel is inhibited during this phase of operation.

AUTOMATIC ENROUTE NAVIGATION. The automatic enroute navigation mode consists of radio navigation, inertial Doppler navigation and magnetic heading navigation aids. These aids and their submodes of operation are described as follows:

Heading Select Mode.

In the heading select mode, the autopilot receives its heading signal from the HSI. To set up this mode, the pilot sets in the desired heading on his HSI and engages the HDG pushbutton on his NAVIGATION SELECTOR panel. To initiate the mode, the pilot depresses the HORIZ NAV pushbutton on the AFCS panel. The autopilot then banks the airplane towards the selected heading, and then tracks this heading. While in this mode, the pilot can change the heading by setting in a new heading on his HSI.

Note

If the heading mode is engaged, all other autopilot horizontal navigation modes are inhibited.

VHF Radio Navigation - VOR Mode.

In the VOR mode, the autopilot receives its signal from the No. 1 VOR/LOC receiver. To setup this mode, the pilot must tune the No. 1 VHF nav radio to the desired VOR station, set in the desired course on his HSI, select VOR/ILS-1 on his nav select panel, set in the desired intercept angle on the heading marker, depress the HORIZ NAV pushbutton on the AFCS control panel and deselect the HDG pushbutton on the nav select panel. The autopilot is now armed for automatic capture and track of the selected radial. When the airplane is within one dot (five degrees) deviation from the selected radial, capture is initiated and the autopilot turns the airplane to a 45-degree intercept angle. At about one-half dot (two degrees) deviation, the airplane enters

the pretrack submode and turns the airplane to the course selected. During capture and pretrack, the maximum angle of bank is 25 degrees. When on track, the bank angle is limited to seven and one-half degrees and a crosswind correction is computed to hold the airplane on track.

During station passage, the autopilot goes into the overstation mode, the VOR deviation input is removed, the computed drift angle is held and the selected course is maintained. If a course change is made over the station, the airplane will turn to the new course with a maximum bank angle of 25 degrees. After station passage, the autopilot will initiate a capture of the outbound radial.

WARNING

Selection of the IMU for HAMS displays will leave the VOR bearings referenced to their associated AHRU. The VOR displays will be in error if their associated AHRU is in error.

Note

When the autopilot HORIZ NAV ON light is on, but the deviation is greater than that required for automatic capture of a selected mode, the heading select mode is automatically engaged and the autopilot will turn the airplane to the heading selected on the HSI.

VHF Radio Navigation - TACAN Mode.

In the TACAN mode, the autopilot receives its signal from the TACAN receiver No. 1.

To set up the TACAN mode, the pilot selects the desired TACAN channel, selects the desired TACAN radial on his HSI with the COURSE SET knob, selects the desired capture heading on the HSI with the HEADING SET knob and engages the TACAN-1 pushbutton on his NAVIGATION SELECTOR panel. To initiate the automatic TACAN mode, through the autopilot roll axis, the pilot depresses the HORIZ NAV pushbutton on the AFCS panel. Engagement occurs when the ON light on the HORIZ NAV pushbutton comes on. From this point on, the VOR and TACAN modes are the same for capture, track and overstation.

WARNING

Selection of the IMU for HAMS displays will leave the TACAN bearings referenced to their associated AHRU. The TACAN displays will be in error if their associated AHRU is in error.

In the following IDNE navigational modes, prior to selecting the primary or auxiliary computer on the nav select panel, the selector switch on the remote HSI heading and course selector panel shall be placed to the "NORMAL" position.

Inertial Doppler Navigation - Heading Steer Mode.

In the heading steer mode, the autopilot receives its steering information from the primary or auxiliary computer. To set up for the heading steer mode, the navigator selects the desired true heading and enters it on the IDNE CONTROL panel and engages the HDG STEER and MODE ENABLE pushbuttons. If the COMP SEL pushbutton on the IDNE CONTROL panel is indicating PRI, the pilot engages the PRI COMPT pushbutton on the NAVIGATION SELECTOR panel. If the COMP SEL pushbutton is indicating AUX, the pilot engages the AUX COMPT pushbutton. When the proper button is depressed on the nav select panel, the heading is displayed on the HSI heading marker is a magnetic heading. With the proper computer selected on the nav select panel, the autopilot can be coupled to the computer by depressing the HORIZ NAV pushbutton on the AFCS control panel.

Engagement occurs when the HORIZ NAV pushbutton ON light comes on. The autopilot then banks the airplane toward the selected heading and tracks the heading.

Inertial Doppler Navigation - Destination Steer Mode.

In the destination steer mode, the autopilot receives its steering information from the primary or auxiliary computer. To set up for this mode, the navigator selects the desired destination program and engages the DEST STEER and MODE ENABLE pushbutton on the IDNE CONTROL panel. If the PRI light on the COMP SEL pushbutton on the IDNE CONTROL panel is on, the pilot engages the PRI COMPT pushbutton on the NAVIGATION SELECTOR panel. If the AUX COMPT SEL pushbutton light is on, the pilot engages the AUX COMPT pushbutton. To initiate the autopilot destination steer mode, the pilot selects the applicable computer on the NAVIGATION SELECTOR panel and depresses the HORIZ NAV pushbutton on the AFCS panel. Engagement occurs when the HORIZ NAV pushbutton ON light comes on.

Inertial Doppler Navigation - Track Steer Mode.

In the Track Steer Mode the autopilot receives its track angle error and cross track deviation error from the primary or auxiliary computer. To set up for this mode, the navigator selects the desired Track Steer program and depresses the TRACK STEER and MODE ENABLE pushbuttons on the IDNE CONTROL panel. The pilot sets the heading marker to the desired intercept angle on his HSI. If the PRI light in the COMP SEL pushbutton on the

IDNE CONTROL panel is on, the pilot depresses the PRI COMPT pushbutton as advised by the navigator. If the AUX COMP SEL pushbutton light is on, the pilot depresses the AUX COMPT pushbutton as advised by the navigator. With the applicable computer selected, the pilot will then depress the HORIZ NAV pushbutton on the AFCS control panel to engage the heading select mode. The airplane will turn to the selected heading. The HDG pushbutton on the nav select panel should be de-selected. At five nautical miles crosstrack deviation, the heading select mode will dis-engage and the airplane will turn to a 45-degree drift corrected intercept angle. Between two to three nautical miles, depending on the speed, the autopilot will turn the airplane to intercept the selected track.

AUTOMATIC VERTICAL NAVIGATION MODE. This mode couples the autopilot to the VERNAV mode of the IDNE primary computer. The IDNE controls the autopilot pitch axis of the airplane to follow a computed flight path between two selected points, or from a present position along a selected flight path. In the event of a malfunction in the IDNE, the vertical navigation mode disengages and the VERT NAV OFF light on the annunciator panel comes on. The automatic VERNAV performance is continually monitored by the FDS displaying VERNAV pitch commands on the ADI pitch steering bars. This mode should be used in conjunction with the horizontal navigation mode of the IDNE.

To set up the vertical navigation mode, the navigator selects the vertical navigation program to be executed, selects the "VERT NAV" position of the DISPLAY SELECT switch on the IDNE INDICATOR panel and engages the POINT or SLOPE and MODE ENABLE pushbuttons on the IDNE CONTROL panel. The pilot then engages the PRI COMPT pushbutton as advised by the navigator. To initiate the automatic vertical navigation mode, the pilot depresses the VERT NAV pushbutton on the AFCS panel as advised by the navigator. The autopilot remains in the existing mode until it receives a vertical navigation capture signal from the IDNE primary computer. At this time, the autopilot transfers to the vertical navigation steering mode. Coupled CWS is available in this mode.

Two automatic low altitude navigation modes, terrain following and terminal navigation are provided. The following is a description of these two modes:

AUTOMATIC TERRAIN FOLLOWING (ATF) MODE. The ATF mode couples the autopilot to the multimode radar for automatic pitch control of the airplane. The fly-up or fly-down signals can be augmented by using the coupled pitch CWS.

Note

The pilot and copilot must monitor the autopilot operation in this mode since the system is not fail-safe.

To set up for ATF, the navigator turns over control of the Ku or X-band radar to the pilot. After the pilot sets up his control panel, he selects RADAR on his nav select panel and depresses the VERT NAV pushbutton on the AFCS panel. When the RADAR pushbutton on the nav select panel is depressed, (and the HDG button is not depressed) the lateral autopilot IDNE modes may be utilized by depressing the HORIZ NAV pushbutton.

Should the MMR fail, the red FAIL light on the pilot's MMR indicator will come on. A failure of the MMR will produce a fly-up command to the autopilot and FDS. The autopilot will attempt to follow the fly-up command until disengaged by the pilot.

CAUTION

Care should be taken not to exceed 13 degrees pitch angle. A 15-degree pitch angle, or greater, will cause the MMR to go into and remain in a failed condition until the pitch angle is decreased below the 15-degree MMR antenna limit.

AUTOMATIC TERMINAL NAVIGATION - AIRDROP (CARP) MODE. In this mode, the autopilot receives track angle error and cross track deviation signals from the IDNE. This function is similar to the track steer mode. When on track, signal scaling is increased to provide the necessary accuracy for tracking.

To prepare for the airdrop (CARP) operation, the navigator sets up the IDNE control panel and the pilot follows the same procedure as in the track steer mode. When the cross track deviation is less than 0.1 nautical mile, the HSI cross track deviation scaling increases by a factor of ten.

AUTOMATIC APPROACH MODES. The automatic approach modes consist of radar approach, ILS and autoland and are used as follows:

Radar Approach Mode.

To set up for automatic radar approach, the appropriate IDNE and MMR procedures must be followed. The pilot sets the desired capture heading with the HSI HEADING SET knob and selects PRI COMP, AUX COMP or RADAR initially on his nav select panel. If PRI COMP or AUX COMP is selected, the automatic capture will occur at 5 N.M. crosstrack deviation. If RADAR is selected (when the MMR is in the RA mode), the automatic capture will occur at 1.5 N.M. At some point greater than 10 N.M. from the runway, RADAR must be selected on the nav select panel, the autopilot is then ready to be armed by depressing the VERT NAV pushbutton. Capture of the radar approach vertical guidance will occur when the ADI deviation indication is approximately centered.

During this mode, the lateral guidance is provided by crosstrack deviation and track angle error from the IDNE, vertical guidance by angular deviation from the MMR and rate of climb from CADC No. 2. This angular deviation is desensitized in the autopilot as a function of the Radar Altimeter No. 1 altitude inputs.

Basic ILS Mode.

The basic ILS mode provides automatic control to the normal Category I minimums.

When setting up this mode, the pilot may select VOR/ILS-1 or ILS-2 on his nav select panel. If VOR/ILS-1 is selected, VHF No. 1 nav receiver, glideslope No. 1 receiver and the pilot's radar altimeter are utilized. If ILS-2 is selected, the VHF No. 2 receiver, glideslope No. 2 receiver and the copilot's radar altimeter are utilized. Following mode engagement, the autopilot roll axis controls the airplane on heading intercept, receiver heading signals from the pilot's HSI, until localizer capture occurs. The capture point is approximately 1-3/4 dot displacement on the HSI. During capture and tracking of the beam, the autopilot roll axis receives a course error signal from the pilot's HSI and a deviation signal from the selected ILS receiver. During this mode, the ADI displays bank steering information and the HSI displays localizer deviation.

Following selection of VERT NAV, the autopilot remains in the existing pitch mode until glideslope capture occurs at approximately beam center. At this time, autopilot control is transferred to the glideslope deviation signal, rudder crossfeed from the autopilot is provided to the yaw augmentation system, the HSI course signal is replaced by a derived heading signal and the ILS bullseye comes into view. The glideslope signal is desensitized as a function of radar altitude to reduce the effects of beam narrowing, noise and bends.

Automatic Approach and Landing - Autoland Mode.

The autoland mode provides a fully monitored automatic landing that includes approach, flare, runway alignment and roll-out capabilities. Green AUTOLAND lights on the pilot's and copilot's main instrument panels are provided to indicate completion of an automatically initiated autoland test, which verifies that the system monitoring is functioning properly. Lights on the pilots' annunciator panel indicate subsequent system malfunctions, or automatic disengagement.

For normal operation of the autoland mode, the system requires correct selection and setting of both pilot's and copilot's navigational aids.

The published ILS heading must normally be set on both HSI's using the COURSE SET knobs prior to glideslope capture. Both radar altimeters must be functional.

The AUTOLAND light on the AFCS control panel will come on when VOR/ILS-1 on the pilot's nav select panel, VOR/ILS-2 on the copilot's nav select panel, HORIZ NAV and VERT NAV on the AFCS control panel are selected. The autoland mode may be engaged any time the AUTOLAND light is on. With the mode selected, the approach test will automatically be performed twenty seconds after glideslope capture. At the conclusion of the approach test, the green AUTOLAND lights will come on. An automatic landing shall never be attempted if these lights do not come on, or for some reason later on, go off.

The autopilot tracks the localizer and glideslope in the same manner as a basic ILS approach. The glideslope deviation is desensitized and the signal is completely removed from the autopilot at flare mode engagement. At 50 feet radar altitude, the autopilot and flight director go into the flare mode and the ATS retards the throttles, at a controlled rate, to the idle position. The green inner light in the ADI bullseye will come on to indicate when the flare maneuver starts. During the flare, the autopilot smoothly reduces the rate of descent to land the airplane at a touchdown sink rate of 125 feet per minute (approximately two feet per second). The runway align mode occurs at a radar altitude of 20 feet. At this time, the autopilot via yaw augmentation, commands the rudder to align the airplane to the HSI course setting prior to touchdown. During align, the autopilot rolls the airplane to a wings-level attitude.

If the crosswind gear is to be used for autoland, and adjustment must be made to the HSI courses. The ILS inbound courses are adjusted the same number of degrees as set on the crosswind gear control and in the same direction, i.e., if the crosswind gear control knob is turned clockwise (right), then the HSI COURSE SET knobs must also be turned clockwise (right) the same number of degrees. During alignment, the rudder inputs will align the landing gear to the adjusted HSI course setting which aligns the gear to the proper runway heading. The alignment can be cross-checked with the crab angle indicator on the ADI. If the landing gear is properly aligned, the crab angle indicator will be indicating zero degrees of crab. At touchdown, a wheel spin-up signal initiates a nose-down command in the autopilot allowing a smooth lowering of the nose wheel to the runway and also activates the roll-out mode in the autopilot. The autopilot, using localizer deviation then provides directional control to the center of the localizer beam.

The autopilot axes are monitored and an OFF light will come on should an axis disengage.

Throughout the autoland approach, flare, runway align and rollout, the FDS allows the autopilot to be monitored by the pilots. The flare computation used by the flight director is provided by a triple redundant flare coupler contained in the pitch axis of the autopilot.

Note

Initial engagement of the go-around attitude subsystem automatically disengages the autopilot and the pitch and roll commands displayed on the FDS must be flown manually. The pilot's and copilot's ADI will continue to display go-around attitude commands until the go-around command is cancelled by a second actuation of the G/A pushbutton. The autopilot may be re-engaged and the FDS commands satisfied through the utilization of CWS or the autopilot roll and pitch controllers.

AFCS NORMAL OPERATION.

To engage the lateral autopilot, the following requirements must be met:

1. All autopilot lateral and AFCS control panel circuit breakers and all instrument ground switches must be closed.

2. The yaw augmentation and lateral augmentation subsystems must be engaged. Augmentation subsystem fault annunciations will not inhibit engagements.

3. The TURN knob must be in the detent.

4. There must not be more than two pounds of roll force applied to the control wheels.

5. The AFCS MASTER POWER must be on.

To engage the pitch autopilot, the following requirements must be met:

1. All autopilot pitch and AFCS control panel circuit breakers and all instrument ground switches must be closed.

2. The pitch augmentation subsystem must be engaged. Augmentation subsystem fault annunciations will not inhibit engagement.

3. The stabilizer alternate pitch trim must not be disconnected. This can be assured by momentarily placing the STAB TRIM RESET switch to "ALTR".

4. The AFCS MASTER POWER must be on.

5. The STALLIMITER circuit breaker on the AVIONICS AC BUS 1 PH A portion of the navigator's circuit breaker panel must be closed to assure stabilizer position information to the autopilot.

To assure normal operation of roll and pitch CWS, the respective PACS must be on.

To assure normal operation of the autopilot, the roll and pitch attitude outputs from two sources of the three used by the autopilot (AHRU 1, AHRU 2 and IMU) must be operating normally, as well as the equipment specified in figure 1-50.

AUTOMATIC THROTTLE SUBSYSTEM.

An automatic throttle subsystem is provided to control the airspeed, Mach number, or angle-of-attack of the airplane within its altitude, airspeed, and maneuvering envelopes. This system is used to control the airspeed during the approach, flare, and touchdown while in a manual or coupled approach mode. During any portion of the flight profile, the pilots can manually override any throttle lever with a force of approximately 16 pounds, or all throttle levers with a for e of approximately 60 pounds under all conditions of engagement.

The ATS operates independently or in conjunction with other subsystems.

The ATS consists of input sensors, a dual channel computer, two throttle servo assemblies, controls and indicators. The operating status of the system is displayed at all times through the AUTO caution system caution and annunciator lights and the AFCS control panel indicators.

The ATS receives 28-volt DC power from the avionics DC bus No. 1, and 115-volt AC power from the avionics AC bus No. 1 (figure 1-69).

ATS Controls.

AUTO THROTTLE PUSHBUTTON. An AUTO THROT pushbutton located on the AFCS panel (figure 1-49) is depressed to engage the direct throttle mode. The ON light on the MASTER POWER pushbutton and the AUTO THROT light in the AUTO THROT pushbutton must be on. Once the direct throttle mode is engaged, indicated by the ON light in the AUTO THROT pushbutton coming on, other autothrottle submodes can be selected.

ATS DISENGAGE PUSHBUTTONS. Either of two disengage pushbuttons (figure 1-12), one on the pilot's No. 1 and one on the copilot's No. 4 throttle levers, is depressed to disengage the ATS. The ATS may also be disengaged by depressing the AUTO THROT pushbutton on the AFCS CONTROL panel. It will also disengage when the IAS/MACH on PITCH mode of the autopilot is selected.

Any disengagement of the ATS causes the pilot's and copilot's IAS manual slew mode to be set and the respective ON lights will come on. If disengagement occurs during a Mach Hold mode, that pilot's Mach manual mode will also be set. The IAS/MACH light will be on to show the correct slew switch function.

ATS Lights.

AUTO THROTTLE LIGHT. An AUTO THROTTLE Light on the pilot's annunciator panel (figure 1-128) comes on whenever an automatic disengagement of the ATS occurs.

AUTO THROTTLE PUSHBUTTON. The indicating functions of this pushbutton are described under the Auto Throttle Pushbutton paragraph in this section.

ATS Modes of Operation.

The ATS has six modes of operation: Direct throttle, alpha hold, Mach hold and adjust, indicated airspeed hold and adjust, go-around, and flare. The following is a discussion of the modes, how they are activated and the purpose each one serves:

DIRECT THROTTLE. The direct throttle mode is the primary mode and will be in effect anytime the ATS is engaged and no other ATS submode is selected. When the AUTO THROT pushbutton is depressed and the ON light comes on, the following action occurs:

The ON lights in the IAS/MACH PITCH, MACH HOLD/ADJ, or IAS HOLD/ADJ pushbuttons go off, if they were on.

The ALPHA HOLD light comes on at the same time the ON light in the AUTO THROT pushbutton comes on.

The direct throttle mode can now be used to provide remote control of the throttle by positioning them through the slewing operation of the IAS MACH REF switches.

Note

Pilot control of this slewing operation is obtained in the same manner described earlier in this section.

With the pilot controlling the slewing, the pilot's command Mach marker will be commanded by the EMAC and the copilot's command Mach marker will be slaved to the pilot's command marker. The pilot's command IAS marker will be in synchronization with the copilot's command IAS marker slaved to it.

With the copilot's taking command of the slewing operation, the same and opposite actions take place.

ALPHA HOLD. The alpha hold mode provides throttle control as a function of angle-of-attack. The throttles will be driven to maintain a constant angle-of-attack. When the ALPHA HOLD pushbutton is depressed, and the ON light comes on, the following action occurs:

The angle-of-attack existing at the time the mode engages will be maintained through automatic throttle control.

Actuation of the ALPHA HOLD pushbutton disengages all other auto-throttle modes. The IAS VSFI's operate in their synchronization mode and the Mach VSFI's are commanded by EMAC.

MACH HOLD AND ADJUST. The Mach hold and adjust mode automatically controls the airplane at the Mach number existing at the time the mode engages. This mode utilizes Mach error information from a potentiometer in either the pilot's or copilot's VSFI. When the MACH HOLD/ADJ pushbutton is depressed, the following action occurs:

The ON light in the MACH HOLD/ADJ pushbutton comes on if the command Mach marker is within a specified distance from the lubber line. Otherwise, the command marker synchronizes within the specified distance, and then the ON light in the MACH HOLD/ADJ pushbutton and the MACH light in the MACH-IAS pushbutton come on.

While in the Mach hold and adjust mode, the airplane, through auto throttle control, holds the engaged Mach reference, or the Mach reference can be changed by slewing the command Mach marker with the IAS-MACH REF switch. As the command marker is slewed, the throttles are automatically advanced or retarded, as required.

Note

Should a Mach number higher than the maximum be inadvertently slewed in, flight will be maintained at the Mach limit when it is reached.

The Mach hold and adjust mode is used between 0.60 and 0.785 Mach.

If the command airspeed limit is reached while the Mach hold and adjust mode is engaged, this mode is transferred to the IAS hold and adjust mode. The ON light in the IAS HOLD/ADJ pushbutton comes on and the ON light in the MACH HOLD/ADJ pushbutton goes off. The command Mach marker is now commanded by EMAC.

INDICATED AIRSPEED HOLD AND ADJUST. The IAS hold and adjust mode automatically controls the airplane at the airspeed existing at mode engagement. The mode utilizes airspeed error information from a potentiometer in either the pilot or copilot's VSFI. When the IAS HOLD/ADJUST pushbutton is depressed, the following occurs:

The ON light in the IAS HOLD/ADJ pushbutton comes on if the command IAS marker is within a specified distance from the fixed index line. Otherwise, the command marker synchronizes within the specified distance at which time the ON light in the IAS HOLD/ADJ pushbutton comes on, as does the IAS light in the IAS/MACH pushbutton.

The airplane, through auto-throttle control, will hold the engaged airspeed reference, or the airspeed reference can be changed by slewing the command IAS marker with the IAS-MACH REF switch. The throttles are automatically advanced or retarded, as required.

The auto-throttle will automatically transfer from the IAS hold and adjust mode to the Mach hold and adjust mode if the Mach changeover point is reached while the IAS hold and adjust mode is engaged and the command Mach marker is within a specified distance and the ON light in the MACH HOLD/ADJ pushbutton comes on and the ON light in the IAS HOLD/ADJ pushbutton goes off. Also, the MACH light in the MACH IAS pushbutton comes on and the IAS light goes off. The command IAS marker is then synchronized.

Note

Should an IAS higher than the maximum be inadvertently slewed in, flight will be maintained at the IAS changeover point when it is reached.

The IAS hold and adjust mode is used between 100 and 410 KCAS.

GO AROUND MODE. The go-around mode is engaged when the G/A pushbutton on either control wheel is depressed and the throttles are automatically advanced to go-around power. At this time the ATS reverts to the direct throttle mode. Depressing the go-around pushbutton the second time disengages the go-around mode.

FLARE. The flare mode automatically controls the aircraft pitch axis and the rate of descent is smoothly decreased and the throttles are automatically retarded at a rate compatible with the flare mode of the aircraft. This action continues until touchdown occurs.

ATS Normal Operation.

To engage the ATS, accomplish the following:

1. Depress the MASTER POWER pushbutton on the AFCS panel.

The ON light in the MASTER POWER pushbutton and the ATS light in the ATS pushbutton should come on.

2. Depress the AUTO THROT pushbutton control.

When the ATS engagement is complete, the ON light in the AUTO THROT pushbutton and the PILOT light in the PILOT/COPILOT control transfer pushbutton come on. Upon engagement, the IAS command marker on both VSFI's drive to and hold at the fixed index lines. The Mach command marker indicates the Mach number as commanded by the EMAC. This engages the ATS in the direct throttle mode and no throttle movement will occur unless commanded by the pilot's IAS/MACH REF slew switch.

To initiate an airspeed or Mach number change, the pilot taking command of the slewing operation accomplishes the following:

1. Depress the IAS HOLD/ADJ or MACH HOLD/ADJ pushbutton, as appropriate. IAS or Mach existing at that time will be held.

2. If IAS is selected, the IAS light comes on. If MACH is selected, the MACH light comes on.

3. Any change to the IAS or Mach may be made with the IAS/MACH REF switch.

4. The throttles will advance or retard until the commanded IAS or Mach number has been attained.

The ALPHA HOLD mode is normally used during a radar approach and landing or during an ILS approach and landing. When the ALPHA HOLD mode is engaged, the throttles are adjusted to maintain the angle-of-attack existing at the time of ALPHA HOLD mode engagement.

Note

The alpha hold mode should only be engaged under stable pitch attitude conditions, since damping exists between the actual angle of attack, as used by the ATS, and the value displayed by the VSFI tapes. Failure to observe such precautions may result in the autothrottle holding an angle different from that desired.

The ATS can be disengaged manually by any of the following ways:

(1) Depress the ATS pushbutton on the pilot's No. 1 or copilot's No. 4 throttle lever.

(2) Depress the AUTO THROT pushbutton on the AFCS panel.

(3) Moving the throttle friction adjust lever out of the minimum position.

(4) Selection of IAS/Mach on PITCH.

The ON light in the AUTO THROT pushbutton should go off, indicating that the ATS is disengaged.

Note

The ATS is disengaged automatically whenever a single malfunction occurs only if the failure is related to the mode being used.

FLIGHT AUGMENTATION SYSTEM.

A flight augmentation system is installed in the airplane to provide stability augmentation in the pitch,

yaw, and lateral axes. Two augmentation computers (pitch and yaw/lateral) receiving signals from the CADC's, the AHRU's, the inertial measurement unit (IMU), rate sensors and the autopilot; send command signals to the respective augmentation system actuators in the surface power units. Actuator inputs are added in series with the pilot inputs to control the surface actuators and are not transmitted to the pilots' input controls.

The flight augmentation system is fail operative and will continue to operate after a single malfunction has occurred. The system is fail safe, since any combination of malfunctions producing an undesirable performance causes the system to automatically disengage.

The FLIGHT AUGMENTATION panel (figure 1-49), located on the center console, forward of the AFCS CONTROL panel, contains the controls and lights for operating the three augmentation systems. In addition, the panel contains a TEST/ON pushbutton, a RESET/FAILURE pushbutton, and a rotary YAW AUG MAN TRIM control knob with its guarded two-position toggle switch.

When power is applied to the airplane, the YAW AUG/OFF, PITCH AUG/OFF and LATERAL AUG/OFF, lights come on. The OFF light in any one of the pushbuttons goes off when its pushbutton is depressed and the applicable augmentation system is engaged.

Yaw Augmentation System.

The yaw augmentation (Y/A) system provides yaw damping, dutch roll damping and turn coordination control for improved airplane performance. During autopilot ILS operation, rudder steering for the autopilot is provided through the yaw augmentation system. The Y/A system is normally used with lateral augmentation (L/A) system, but can be used by itself. If the Y/A system is off, the lateral axis of the autopilot is disengaged. The Y/A system receives hydraulic pressure from systems No. 1, 2, and 3.

WARNING

Do not use the yaw augmentation manual trim for normal operation since it bypasses the rudder stop system. This device provides up to 20 degrees of rudder deflection in 1/2 second. Rudder application should be slow and to the amount necessary to control the airplane. Rapid rudder input could cause structural damage.

The Y/A system receives 115-volt AC power from the No. 1 and 2 avionics AC buses and 115-volt isolated AC power from the No. 1 isolated AC bus (figure 1-69).

Yaw Augmentation System Controls.

YAW AUGMENTATION PUSHBUTTON. A YAW AUG pushbutton (figure 1-49), located on the FLIGHT AUGMENTATION panel, is used to engage and disengage the Y/A system. When engaged, the OFF light on the pushbutton goes off. Depressing the pushbutton again disengages the system and causes the OFF light to come on.

TEST PUSHBUTTON. The TEST pushbutton (figure 1-49), located on the FLIGHT AUGMENTATION panel, is used to activate the BITE for the self-test of the yaw/lateral subsystems. The BITE for the Y/A and L/A subsystems must be run concurrently.

RESET/FAILURE PUSHBUTTON. The RESET FAILURE pushbutton (figure 1-49) on the FLIGHT AUGMENTATION panel is used to continue the test cycle in the event the FAILURE light comes on and to reset the system when the RESET light comes on at the end of the system test. If, during a test, the FAILURE light comes on, the test sequence will stop. Depressing the RESET/FAILURE pushbutton will cause the FAILURE light to go off and the test sequence to continue. At the end of the test, the RESET light will come on. Depressing the RESET/FAILURE pushbutton will cause the RESET light to go off and reset the system.

YAW AUGMENTATION MANUAL TRIM. A rotary YAW AUG MAN TRIM control knob (figure 1-49), located on the FLIGHT AUGMENTATION panel, is used to control the rudders through the Y/A subsystem in the event of a jam in the single rudder cable system. In order for the control to be operative, it must be initially in the neutral (zero) position and the guarded switch, located to the right of the control knob, must be placed to "ON."

Yaw Augmentation System Indicators.

YAW AUGMENTATION FAULT LIGHT. A YAW AUG FAULT light (failure 1-128) located on the pilots' annunciator panel, comes on whenever monitoring logic in the Y/A computer detects a failure in one of the three electronics channels, or one of the two servo loops.

YAW AUGMENTATION INOPERATIVE LIGHT. A YAW-INOP light (figure 1-128), located on the pilots' annunciator panel, comes on whenever the monitoring logic in the Y/A system detects a failure that disengages yaw augmentation. The OFF light on the YAW AUG pushbutton also comes on indicating that yaw augmentation is disconnected.

Yaw Augmentation System Normal Operation.

The yaw augmentation system can be put into normal operation by depressing the YAW AUG pushbutton and turning on the rudder hydraulic power switches. If the OFF light in the pushbutton goes off and the FAULT and INOP lights are off, the system is engaged. During normal operation, the yaw and lateral augmentation computer continuously monitors the system and detects any fault or failure in the system.

The yaw augmentation subsystem is normally used with the lateral augmentation subsystem, but can be used by itself. However, if the lateral augmentation system is off, turn coordination is not available, but yaw damping is maintained.

Note

During switching of electrical power between external, APU, or generator, power interruptions can occur which cause the YAW AUG FAULT and the LATERAL AUG FAULT lights to come on. The faults should clear when both systems are recycled by simultaneously depressing the YAW AUG and LATERAL AUG pushbuttons to off and then back to on.

Lateral Augmentation System.

The lateral augmentation (L/A) system provides roll damping, (only with the autopilot roll axis engaged) and spiral divergence control for improved airplane performance. The L/A system is normally used with the Y/A system, but can be used by itself. If the L/A system is off, the roll axis of the autopilot is disengaged. The L/A system receives hydraulic pressure from systems No. 1, 2, and 4.

The L/A system receives 115-volt AC power from the No. 1 avionics AC bus and the No. 1 isolated AC bus (figure 1-69).

Lateral Augmentation System Controls.

LATERAL AUGMENTATION PUSHBUTTON. A LATERAL AUG pushbutton (figure 1-49), located on the FLIGHT AUGMENTATION panel, is used to engage and disengage the L/A system. When engaged, the OFF light on the pushbutton goes off. Depressing the pushbutton again, disengages the system and causes the OFF light to come on.

TEST PUSHBUTTON. The TEST pushbutton (figure 1-49), located on the FLIGHT AUGMENTATION panel, is used to activate the BITE for self-test of the yaw/lateral systems (BITE for Y/A and L/A must be run concurrently).

RESET/FAILURE PUSHBUTTON. The RESET/FAILURE pushbutton (figure 1-49), on the FLIGHT AUGMENTATION panel is used to continue the test in the event the FAILURE light comes on and to reset the system when the RESET light comes on at the end of the system test. If, during a test, the FAILURE light comes on, the test sequence will stop. Depressing the RESET/FAILURE pushbutton will cause the FAILURE light to go off and the test sequence to continue. At the end of the test, the RESET light will come on. Depressing the RESET/FAILURE pushbutton will cause the RESET light to go off and reset the system.

Lateral Augmentation System Indicators.

LATERAL AUGMENTATION FAULT LIGHT. A LATERAL AUG. FAULT light (figure 1-128) located on the pilots' annunciator panel comes on whenever monitoring logic in the L/A computer detects a failure in one of the three electronics channels, or one of the two servo loops.

LATERAL AUGMENTATION INOPERATIVE LIGHT. A LATERAL AUG. INOP light (figure 1-128), located on the pilots' annunciator panel, comes on whenever the monitoring logic in the L/A system detects a failure that disengages lateral augmentation. The OFF light on the LATERAL AUG pushbutton also comes on indicating that lateral augmentation is disconnected.

Lateral Augmentation System Normal Operation.

The L/A system can be put into normal operation by depressing the LATERAL AUG pushbutton and turning on the aileron hydraulic power switches. The L/A system is normally used with the Y/A system, but can be used by itself. However, if the Y/A system is off, turn coordination is not available, but spiral divergence control is maintained. Autopilot roll damping will not be maintained because of the Y/A disengaging the roll autopilot.

Note

During switching of electric power between external, APU, or generator, power interruptions can occur which cause the YAW AUG FAULT and the LATERAL AUG FAULT lights to come on. The faults should clear when both systems are recycled by depressing the YAW AUG and LATERAL AUG pushbuttons to off and then back to on.

Pitch Augmentation System.

The pitch augmentation (P/A) system improves the airplane pitch stability.

The autopilot pitch axis is automatically disengaged when the P/A system is manually or automatically disengaged. The P/A system receives hydraulic pressure from hydraulic systems No. 2 and 3.

The P/A system receives 115-volt AC power from the avionics AC buses No. 1 and No. 2 and from the avionics isolated AC bus (figure 1-69).

Pitch Augmentation System Controls.

PITCH AUGMENTATION PUSHBUTTON. A PITCH AUG pushbutton (figure 1-49), located on the FLIGHT AUGMENTATION panel, is used to engage and disengage the P/A system. When engaged, the OFF light in the pushbutton goes off. Depressing the pushbutton again disengages the system and causes the OFF light to come on.

TEST PUSHBUTTON. The TEST pushbutton (figure 1-49), located on the FLIGHT AUGMENTATION panel, is used to activate the BITE for the self-test of the P/A system.

RESET/FAILURE PUSHBUTTON. The RESET/FAILURE pushbutton (figure 1-49) on the FLIGHT AUGMENTATION panel is used to continue the test cycle in the event the FAILURE light comes on and to reset the system when the RESET light comes on at the end of the system test. If, during a test, the FAILURE light comes on, the test sequence will stop. Depressing the RESET/FAILURE pushbutton will cause the FAILURE light to go off and the test sequence to continue. At the end of the test, the RESET light will come on. Depressing the RESET/FAILURE pushbutton will cause the RESET light to go off and reset the system.

Pitch Augmentation System Indicators.

PITCH AUGMENTATION FAULT LIGHT. A PITCH AUG. FAULT light (figure 1-128), located on the pilot's annunciator panel, comes on whenever monitoring logic in the P/A computer detects a failure in one of the three electronics channels, or one of the two servo loops.

PITCH AUGMENTATION INOPERATIVE LIGHT. A PITCH AUG. INOP light (figure 1-128) located on the pilot's annunciator panel comes on whenever the monitoring logic in the P/A system detects a failure that disengages pitch augmentation. The OFF light of the PITCH AUG. pushbutton also comes on indicating that pitch augmentation is disconnected.

Pitch Augmentation System Normal Operation.

The pitch augmentation system can be put into normal operation by depressing the PITCH AUG pushbutton and turning on the inboard elevator hydraulic power switches. If the OFF light goes off and the fault or inop lights are off, the system is engaged.

During normal operation, the P/A computer continuously monitors the system and detects any fault or failure in the system.

Note

During switching of electric power between external, APU, or generator, power interruptions can occur which causes the PITCH AUG FAULT light to come on. Clearing of the fault should be accomplished by recycling the PITCH AUG pushbutton to off and back to on.

Pilot Assist Cable Servo Subsystem.

Two independent pilot assist cable servo (PACS) subsystems are used to assist the pilot in moving the aileron and elevator primary flight control cable systems. The subsystem is intended for full time use during manual and automatic flight control of the airplane. For further information about the system refer to the "Flight Control System" paragraph in this section.

TRIM COMPENSATOR SUBSYSTEM.

On 00445 and up and airplanes modified by T.O. 1091, the trim compensator subsystem has been removed/deactivated. A trim compensator (TC) subsystem is incorporated which automatically positions the horizontal stabilizer to augment the longitudinal stick free stability. Stabilizer positioning is a function of both airspeed (impact pressure) and Mach number, which are provided by the CADC.

The subsystem consists of a computer, a stabilizer position transducer, control pushbutton on the FLIGHT AUGMENTATION panel and an indicator on the pilots' annunciator panel.

The trim compensator subsystem receives 28-volt DC power from the No. 1 avionics DC bus and 115-volt AC power from the No. 1 avionics AC bus (figure 1-69).

Trim Compensator Subsystem Controls.

TRIM COMPENSATOR SUBSYSTEM ENGAGE PUSHBUTTON. The TRIM COMP pushbutton (figure 1-49), located on the FLIGHT AUGMENTATION panel, is used to engage the TC system, when depressed, the OFF light on the pushbutton goes off.

TRIM COMPENSATOR SUBSYSTEM TEST PUSHBUTTON. A TEST pushbutton (figure 1-49), located on the FLIGHT AUGMENTATION panel, is used to activate the BITE for the functional self-test of TC system. Depressing the pushbutton activates the BITE, if the system has been turned on, causing the ON light on the pushbutton to come on.

Trim Compensator Subsystem Indicators.

TRIM COMPENSATOR INOPERATIVE LIGHT. A TRIM COMP INOP light (figure 1-128), located on the pilot's annunciator panel, comes on whenever a malfunction occurs in the system, if the airplane power to the subsystem fails or when the TRIM COMP pushbutton is disengaged (OFF light on). The light will also come on at stick shaker onset and must be reset after stick shaker operation ceases.

Trim Compensator Subsystem Test Procedures.

A subsystem self-test feature is provided to test the subsystem on the ground prior to flight. To initiate the system self-test, the subsystem is engaged and the TEST pushbutton is depressed.

The ON light in the TEST pushbutton should come on indicating that the test has started. The TRIM COMP INOP light should come on. In the self-test mode, the TC computer will drive the horizontal stabilizer to a three-degree stabilizer leading edge down test position. When the stabilizer reaches the test position, the TRIM COMP INOP light will go off and then come back on. The TC computer will drive the stabilizer back to the original position and the TRIM COMP INOP light will go off to indicate the end of test. In the event the stabilizer does not trim through the test range, as determined by the TC computer, the TRIM COMP INOP light remains on and the system locks into the synchronization mode. The TRIM COMP OFF light on the FLIGHT AUGMENTATION panel comes on to indicate disengagement of the system.

Trim Compensator Subsystem Malfunction Detection.

The trim compensator subsystem contains a malfunction detection function that gives an indication of a failure in the TC subsystem. When a malfunction is detected, the trim output is disconnected, the TC is switched to the synchronization mode, the TRIM COMP INOP light comes on, the CAUTION lights on the main instrument panel come on, and logic signals are sent to the MADAR system. The TRIM COMP INOP and CAUTION lights come on when the following is detected:

(1) A difference of 0.08 degree between the CADC command and the actual stabilizer position is exceeded.

(2) The airplane is above 0.76 Mach and the TC computer cannot furnish an output.

(3) The airplane is below 0.76 Mach and a trim signal is being sent to the stabilizer actuator from the Mach function.

(4) A fault is detected in the TC test sequence.

Trim Compensator Subsystem Normal Operation.

The system operates in two modes: a synchronization mode and control mode. The TC operates in the synchronization mode under two conditions:

When the CADC senses that airplane airspeed and Mach are below the minimum for automatic trim, the TC is disconnected from the stabilizer actuator and the stabilizer is trimmed manually or automatically by the autopilot.

The TC remains synchronized with the stabilizer during manual or automatic trimming to assure that a transient does not occur when switching to the control mode. When the TRIM COMP pushbutton is depressed, and the OFF light goes off, the TC is in the synchronization mode. The TC operates in the control mode under two conditions:

When the impact pressure from the CADC exceeds 80 PSF (about 150 KCAS), the TC switches to the control mode and commands the stabilizer to trim the airplane nose up for increasing values of impact pressure (airspeed) and to trim the airplane nose down for decreasing airspeeds. The stabilizer reference position is established through pilot trim input.

Note

During deceleration maneuvers while maintaining level Flight, the TC system may fault if the stabilizer is driven to its nose down limit by the TC system. If this situation occurs, the pilot must re-trim the stabilizer from the nose down trim limit and re-engage the TC.

When the airplane enters the "tuck" region (Mach number above 0.76), the control mode commands the stabilizer to trim the airplane nose up as the Mach number is increased and to trim the airplane nose down as the Mach number is decreased. The stabilizer reference position may be established by pilot trim input.

GO-AROUND ATTITUDE SUBSYSTEM.

A go-around attitude (G/A) subsystem is installed in the airplane. The G/A subsystem provides pitch attitude commands for rotation, take-off, climbout, and go-around maneuvers. The maximum pitch-up command is limited to 15 degrees, and the transition between different flight paths will be accomplished without abrupt pitch-command changes. The G/A subsystem provides signals to other airplane subsystems to give the pilot the capability of accomplishing a manual go-around maneuver. The autopilot will be disengaged when the G/A pushbutton is depressed.

The G/A subsystem consists of a two-channel computer, and system self-test provisions. The computer receives signals from CADC, No. 1 and No. 2, upper angle-of-attack transducers, and AHRU's.

The G/A subsystem provides the following data to other airplane subsystems:

(1) Fuselage reference line angle-of-attack signals for continuous display on the angle-of-attack VSFI's.

(2) Fuselage reference line angle-of-attack signals for the multi-mode radar for use during the terrain following mode.

(3) Angle-of-attack error signals to the flight director computers.

The G/A subsystem receives 28-volt DC power from the No. 2 avionics DC bus, 115-volt AC power from No. 2 avionics AC bus, 26-volt AC power from the No. 2 NAV bus and 26-volt AC power from the emergency bus (figures 1-61 and 1-69).

Go-Around Subsystem Controls.

GO-AROUND ENGAGE PUSHBUTTON. A G/A pushbutton (figure 1-44), located on the outboard side of each pilot's control wheel, is used to initiate a manual go-around. Depressing the pushbutton with the autopilot and autothrottle system engaged results in automatic throttle advancement and autopilot disengagement.

Go-Around Subsystem Indicators.

GO-AROUND ENGAGE LIGHT. A G/A light (figure 1-110), located on each ADI, comes on whenever the go-around is initiated.

GO-AROUND INOPERATIVE LIGHT. The GO-AROUND INOP light on the annunciator panel comes on whenever the G/A is sending a faulty signal to the flight director system.

On 68304, 68307, 70167 and 70170 thru 00452 not modified by T.O. 1308, the light has been disconnected.

Go-Around Attitude Subsystem Monitoring and Self-Test.

The G/A subsystem contains provisions that continuously monitor all sensor input and computer output signals. Any single probable fault that degrades the performance of the subsystem causes the GO-AROUND INOP light to come on and the pitch steering bars on the ADI's to retract from view. If the angle-of-attack fuselage reference line signals are faulty, the multi-mode radar reverts to a secondary input signal for the terrain following mode, and the angle-of-attack warning flag on the airspeed-Mach indicator extends into view.

Go-Around Subsystem Normal Operation.

The G/A subsystem is put into active operation whenever the G/A pushbutton on either pilot's control wheel is depressed.

When the G/A maneuver has been initiated, the ATS, if engaged, will automatically position the throttles. The ADI's display steering commands for optimum climbout angle which compensates for partial loss of thrust and flap setting and is independent of the attitude indications on the ADI and indicated airspeed. The G/A subsystem is automatically disengaged whenever a fault occurs in the G/A subsystem or in any other input subsystem interfaced with the G/A subsystem. Depressing the G/A pushbutton on either pilot's control wheel manually disengages the G/A subsystem after initial engagement.

WING FLAPS AND SLATS SYSTEM.

The airplane is equipped with slotted, Fowler-type, trailing edge flaps and full-span leading edge slats. The flaps and slats operate in conjunction with each other and are controlled by a single handle on the control pedestal (figure 1-51).

WING FLAPS.

The wing flaps consist of six sections on each wing, extending from the wing root to the aileron. The flaps are mounted on carriages which roll on curved tracks extending aft from the trailing edge of the wing structure. A flap and slat drive gearbox, located on the aft center wing beam is powered by two separate hydraulic motors, and is used to drive a single flap torque tube system in each wing. One hydraulic motor receives power from the No. 1 hydraulic system and the other receives power from the No. 4 hydraulic system. Each flap section is extended and retracted by two ballscrew actuators which are connected through gearboxes to the torque tube system. Time for flap extension to or retraction from the 100 percent flap position, with both hydraulic systems operating, is 29 seconds. With one hydraulic system inoperable, the time is 58 seconds.

Flap Asymmetry System.

The flap asymmetry system consists of a synchro transmitter located on the outboard end of each flap torque drive tube and a flap-slat asymmetry control box. The signals of these two synchros are compared with each other and when the asymmetry limits have been reached, an asymmetry relay in the control box is energized which in turn energizes solenoid-operated hydraulic shutoff valves in the manifold to shut off pressure to the motors. This action causes hydraulically released spring-loaded brakes, within the gearbox assembly, to engage the torque tubes, stopping torque tube rotation. The flap asymmetry signal also energizes solenoid-operated torque tube brakes located at the outboard end of each flap torque drive tube and sends power to the BRAKE ON light and the asymmetry light on the asymmetry detector control box, to the TE FLAP BRAKE ON light and the TE FLAP ASYMMETRY light on the pilots' annunciator panel. Once the asymmetry system has locked the flap drive mechanism, it will remain locked until reset using the asymmetry detector control box located on the wing aft beam. Refer to Section III, Emergency Procedures, for flap asymmetry detector reset procedures. Power for operation of the solenoid-operated hydraulic shutoff valves is from the 28-volt DC main buses No. 1 and No. 2 (figure 1-67 and 1-68). The solenoid-operated flap asymmetry brakes receive 115-volt AC power from the aft main AC bus No. 1 (D, figure 1-67). The flap asymmetry control circuits receive 28-volt DC power from the isolated DC bus (figure 1-64).

WING SLATS.

The leading edge slats consist of seven sections on each wing, extending from the wing root to the wing tip. Each slat section is attached to two curved tracks which move on rollers in the wing structure. Each slat section is extended and retracted by two telescoping ballscrew actuators which are connected through gearboxes to a single slat torque tube system in the wing. Power for operation of the slats is provided by the flap and slat drive gearbox. Power output from the gearbox is transmitted by torque tubes through a decoupler unit and then to a clutch and brake assembly. From there, the power output is transmitted by torque tubes to the slat drive actuators in the wings. The slat decoupler unit is designed to disengage the flap and slat drive gearbox from the slat system in the event an excessive load occurs in the slat drive system. After disengagement has occurred, an integral decoupler switch puts the slat clutch/brake assembly in the brake mode, trips the slat torque tube brakes and sends power to the BRAKE ON light on the asymmetry detector control box and to the LE SLAT BRAKE ON light on the pilots' annunciator panel. These conditions are maintained until the slat decoupler is manually reset after the airplane has landed.

The clutch and brake assembly utilizes hydraulic pressure from systems No. 1 and No. 4 to engage and disengage the clutch and brake within the assembly. When the slats are fully retracted or extended, proximity switches provide a signal to close solenoid-operated hydraulic shutoff valves in the assembly. This action causes the clutch to disengage and the brake to engage, thus stopping slat movement. In this configuration the flap drive system is free to move in either direction. When a slat extend or retract command is initiated, the solenoid-operated hydraulic shutoff valves open, supplying hydraulic pressure which disengage the brake and engage the clutch, thus connecting the slat drive system to the flap and slat drive gearbox. Power for operation of the solenoid-operated valves is from the 28-volt DC main buses No. 1 and No. 2 (figure 1-67 and 1-68).

Slat Asymmetry System.

The slat asymmetry system consists of a synchro transmitter located on the outboard end of each slat torque drive tube and a flap-slat control box. The signals of these two synchros are compared with each other and when the asymmetry limits are reached, an asymmetry relay in the control box is energized which in turn energizes the solenoid-operated hydraulic shutoff valves in the clutch and brake assembly. This action causes the clutch to disengage and the brake to engage thus stopping slat movement. The slat asymmetry signal also energizes solenoid-operated torque tube brakes located at the outboard end of each slat torque drive tube and sends power to the BRAKE ON light and the ASYMMETRY light on the asymmetry detector control box, to the LE SLAT BRAKE ON light and the LE SLAT ASYMMETRY light on the pilots' annunciator panel. Once the asymmetry system has locked the slat drive mechanism, it will remain locked until reset. In an emergency, the slat asymmetry system may be reset by a reset switch located on the flap-slat asymmetry detector control box. Refer to Section III, Emergency Procedures, for slat asymmetry test procedures.

It should be noted that an asymmetry signal in the slat system will not stop flap travel. Full extension of flaps only will not affect airplane controllability, but will result in a stall speed higher than that of a normal flaps-slats down configuration. The solenoid-operated slat asymmetry brakes receive 115-volt AC power from the aft main AC bus No. 1 (figure 1-70). The slat asymmetry control circuit receives 28-volt DC power from the isolated DC bus (figure 1-64).

FLAP AND SLAT CONTROLS AND INDICATORS.

Flap Handle.

A flap handle (figure 1-45) located on the center console, is used to control the trailing edge flaps and the leading edge slats. The flap handle quadrant has six marked positions: "UP" (zero percent, zero degrees), "20" (20 percent, 8 degrees), "40" (40 percent, 16 degrees), "T.O. & APP" (62.5 percent, 25 degrees), "80" (80 percent, 32 degrees) and "LAND" (100 percent, 40 degrees). On airplanes modified by T.O. 1441, reflective tape has been applied to both sides of the vertical portion of the flap handle and at the 40-percent and T.O. & APP. positions on the flap handle quadrant.

The flap handle is mechanically connected to the flap and slat drive gearbox. Movement of the flap handle out of the "UP" position causes the flap hydraulic motors to operate, causes the slat brake to disengage and the slat clutch to engage, and allows the flaps and slats to move to the position selected. The slats will reach the fully extended position at approximately the same time the flaps reach 37-percent extended position. Movement of the flap handle between the 37-percent and 100-percent position will have no effect on slat position. During the flap retraction, as the flaps reach the 37-percent position the slats will begin to retract.

CAUTION

Do not use the SLAT DRIVE disconnect switch in flight except in the event of a slat malfunction, or the flaps and slats are in the fully retracted position. Should the slats be disconnected while in the fully retracted position, the flaps must be fully retracted prior to returning the switch to normal. (See Section V.)

Slat Drive Disconnect Switch.

A SLAT DRIVE disconnect switch, located on the overhead console (figure 1-45), is provided to disconnect the slats from the flap drive system. Placing the switch to "DISC" supplies a ground to close the system 1 and 4 hydraulic shutoff valves in the slat clutch and brake assembly. This action causes the clutch to disengage and the brake to engage, stopping slat motion. Placing the switch to "NORM" interrupts the ground to the shutoff valves, allowing system 1 and 4 hydraulic pressure to disengage the brake and engage the clutch. The switch and solenoid valves receive 28-volt DC power from the main DC power from the main DC buses No. 1 and No. 2 (figure 1-67 and 1-68).

CAUTION

Do not use the SLAT DRIVE disconnect switch in flight except in the event of a slat malfunction or when the flaps and slats are fully retracted. Should the slats be disconnected while the slats are fully retracted and the flaps are extended, the flaps must be returned to the fully retracted position before returning the switch to "NORM". Refer to Section V for airspeed limitations with flaps extended and slats retracted.

Flap Position Indicator.

A flap position indicator, located on the pilots' center instrument panel (figure 1-45), indicates, in percent of total travel, the position of the trailing edge flaps. The indicator is graduated from UP (zero percent) to DOWN (100 percent) in 10-percent increments. The indicator receives flap position signals from a remote flap position transmitter mounted on the flap drive gearbox assembly. The indicator and transmitter operate on 28-volt DC power from the main DC bus No. 2 (figure 1-67).

Slat Position Indicator.

A three-position flip-flop indicator, located on the pilots' center instrument panel (figure 1-45), indicates the position of the leading edge slats. The indicator displays the word RETRACT or EXTEND in response to a signal through the flap/slat proximity control box from the slat retract proximity switches located in the inboard track of the left and right innermost slat or the slat extend proximity switch located in the moving islands of each inboard pylon. A barber pole is displayed in the window while the slats are in an

intermediate position. The indicator receives 28-volt DC power from the main DC bus No. 1 (figure 1-68).

Flap and Slat Asymmetry Detector Control Box.

A flap and slat asymmetry detector control box, (figure 1-51) located in the wing rear beam area is provided primarily for ground checkout and maintenance of the flap and slat asymmetry systems. The box may be used in flight, however, to reset or override a flap or slat asymmetry signal. The flap and slat system controls and indicators are identical in function.

FLAP AND SLAT SYMMETRY TEST SWITCHES AND LIGHTS. The FLAP and SLAT SYMMETRY TEST switches and lights are provided to check for proper operation of the flap and slat symmetry systems. The SYMMETRY light being on while the switch is in "TEST" and the flaps are moving indicates that the control box properly indicates a symmetrical flap and slat condition.

FLAP AND SLAT ASYMMETRY TEST SWITCHES AND LIGHTS. The FLAP and SLAT ASYMMETRY TEST switches and lights are provided to check that the respective asymmetry system properly detects and responds to a flap or slat asymmetry condition. Placing the respective ASYMMETRY TEST switch to "TEST" causes the flap or slat asymmetry detector units to generate an asymmetry signal. The ASYMMETRY light being on while the switch is in "TEST" indicates proper response of the flap or slat asymmetry system. The flap asymmetry test is valid only when the flaps are up.

SLAT RESET SWITCH. The SLAT RESET switch is used to determine if the slats are asymmetrical or if a false asymmetrical signal is present. The switch is spring-loaded to an OFF position. Momentarily placing the switch to "ON" will cause the SLAT ASYMMETRY light on the asymmetry detector control box and the LE SLAT ASYMMETRY light on the pilots' annunciator panel to go off if no asymmetry exists, or will cause these two lights to stay on if an asymmetry does exist.

SLAT BRAKE ON LIGHT. The SLAT BRAKE ON light on the asymmetry detector control box and the LE SLAT BRAKE ON light on the pilots' annunciator panel come on whenever a slat torque tube brake is applied. These lights indicate that a torque tube overspeed occurred, a slat asymmetry occurred, or that the slat torque tube decoupled from the angle gear box.

SLAT BRAKE RELEASE SWITCH. The SLAT BRAKE RELEASE switch is used to release the slat torque tube brake after it has been applied. The switch is spring-loaded to an OFF position. The slat torque tube brakes are released by momentarily holding the SLAT BRAKE RELEASE switch to "ON" at the same time the SLAT RESET switch is momentarily placed to "ON."

FAULT DETECT TEST SWITCH. The FAULT DETECT TEST switch is not to be used. If the switch is in any position other than "OFF" when other switches on the asymmetry detector control box are being used, erroneous results may occur.

FLAP RESET SWITCH. The FLAP RESET switch is used to determine if the flaps are asymmetrical or if a false asymmetrical signal is present. The switch is spring-loaded to an OFF position. Momentarily placing the switch to "ON" will cause the FLAP ASYMMETRY light on the asymmetry detector control box and the TE FLAP ASYMMETRY light on the pilots' annunciator panel to go off if no asymmetry exists, or will cause these two lights to stay on if an asymmetry does exist.

FLAP BRAKE ON LIGHT. The FLAP BRAKE ON light on the asymmetry detector control box and the TE FLAP BRAKE ON light on the pilots' annunciator panel come on whenever a flap torque tube brake is applied. These lights indicate that a flap torque tube overspeed occurred or that a flap asymmetry occurred.

FLAP BRAKE RELEASE SWITCH. The FLAP BRAKE RELEASE switch is used to release the flap torque tube brake after it has been applied. The switch is spring-loaded to an OFF position. The flap torque tube brakes are released by momentarily holding the FLAP BRAKE RELEASE switch to "ON" at the same time the FLAP RESET switch is momentarily held to "ON."

Trailing Edge Flap Asymmetry and Brake On Lights.

Two lights, one marked TE FLAP ASYMMETRY and the other marked TE FLAP BRAKE ON are located on the annunciator panel (figure 1-128). The TE FLAP ASYMMETRY light comes on whenever the flap asymmetry system has generated an asymmetry signal. The TE FLAP BRAKE ON light comes on whenever the flap torque tube brakes are engaged. Flap torque tube brake engagement may occur as a result of a flap torque tube overspeed or a flap system asymmetry condition.

Leading Edge Slat Asymmetry and Brake On Lights.

Two lights, one marked LE SLAT ASYMMETRY and the other marked LE SLAT BRAKE ON are located on the annunciator panel (figure 1-128). The LE SLAT ASYMMETRY light comes on whenever the slat asymmetry system has generated an asymmetric signal. The LE SLAT BRAKE ON light comes on whenever the slat torque tube brakes are engaged. Slat torque tube brake engagement may occur as a result of a slat torque tube overspeed, slat system asymmetry condition, or a slat torque tube decoupling from the gear box.

Slat-Flap Synchronization Light.

A SLAT-FLAP SYNC light, located on the annunciator panel (figure 1-128) will come on if the flaps should reach the 40-percent extended position before the slats are fully extended. On 00451 and up and airplanes modified by T.O. 1216, the slat-flap synchronization light comes on when the flaps are fully retracted and the slats are not fully retracted.

STALLIMITER SYSTEM.

Two independent stallimiter systems are provided, each of which has a stall warning function and a stall limiting function. The stall warning function warns of an approach to a stall condition by means of a control column shaker. The stall limiting function provides an audible warning that the airplane is entering an excessive stall penetration regime.

STALLIMITER COMPUTER.

The stallimiter computer contains two separate and independent channels. One is for the pilot and one for the copilot. Each channel operates independently to provide signals for control column shaker and audible stall warning. If either channel fails to operate, shaker action is provided from the other shaker through the control column interconnect rod. Either channel will generate the audible signal used in stall warning. The No. 1 channel (Pilot's) receives angle-of-attack inputs from the top left and top right angle-of-attack vane transducers, Mach inputs from the No. 1 CADC, and stabilizer position information when leading edge slats are fully extended. It also receives a signal from the thrust reverser unlock switch when either of the in-flight thrust reversers is not locked. The No. 2 channel (copilot's) receives inputs from the lower left and lower right angle-of-attack vane transducers, Mach inputs from the No. 2 CADC, and stabilizer position information when leading edge slats are fully extended. It also receives a signal when either of the in-flight thrust reversers is not locked.

The incoming vane angle-of-attack signals to each channel are combined prior to comparison with the programmed value for shaker onset and programmed value for audible stall warning. The control column shaker and audible warning systems are de-energized in flight unless the programmed values for actuation are exceeded and are de-energized on the ground by the touchdown relay. Both computer channels are energized when power is on the airplane. Computer channel No. 1 uses 115-volt AC power from the AC avionics bus No. 2 and 28-volt DC power from the DC avionics bus No. 2 (figure 1-69). Computer channel No. 2 uses similar power from the No. 1 AC and DC avionics buses (figure 1-69).

STALL WARNING.

Stall warning is provided by a control column shaker installed near the bottom end of each control column. The shaker consists of a motor which rotates an unbalanced mass at approximately 825 RPM (pilot's) and 600 RPM (copilot's). When the airplane approaches a stall and the incoming angle-of-attack signals exceed a predetermined value, each computer sends a signal through contacts of a touchdown relay to a shaker relay and a nose-up trim interrupt relay. When these two relays are energized, the following actions occur:

(1) Normal and alternate nose-up trim signals to the horizontal stabilizer are interrupted.

(2) The control column shakers are activated.

These conditions will persist until the angle-of-attack is reduced below the value scheduled for shaker onset. The predetermined shaker onset angle-of-attack value is adjusted as a function of Mach number. The onset point is shifted when either the slats are fully extended or in-flight thrust reversers are not locked. (Refer to Part 1 of T.O. 1C-5A-1-1.) When the in-flight thrust reversers are not locked, the shaker onset angle-of-attack is lowered (one degree) in order to provide warning of stall approach. In this configuration, stall approach must be terminated at shaker onset. The pilot's control column shaker motor uses 28-volt DC power from the No. 2 avionics DC bus and the copilot's control column shaker motor uses 28-volt DC power from the No. 1 avionics DC bus (figure 1-69).

AUDIBLE STALL WARNING.

Airplane entry into excessive stall penetration past shaker onset will be identified by an audible sound coming from the interphone system and overhead speakers. This audible stall warning is initiated by the computer when the angle of attack exceeds the programmed value of stall. The audible warning always occurs at a larger angle of attack than shaker onset, and is prevented by the computer from preceding shaker onset. In this condition, the computer sends a signal through a touchdown relay to the interphone system and overhead speakers. The signal will continue sounding for one second after the angle of attack is reduced below the angle of attack for shaker onset, to delay termination of pilot recovery action and reduce the possibility of re-entering the shaker regime following recovery. The programmed angle of attack for audible stall warning is adjusted as a function of Mach number. When the slats are fully extended the onset point is shifted and further adjusted with stabilizer position. (Refer to Part 1 of T.O. 1C-5A-1-1.) Stabilizer position is used to decrease the angle of attack for audible warning as the airplane CG approaches the aft limit. This provides the same stall speed at all CG's.

STALLIMITER SYSTEM CONTROLS AND INDICATORS.

Three control panels, one on the pilot's overhead console and one on either side console (figure 1-52), are used to control the stallimiter system.

Stallimiter Switches.

Two STALLIMITER switches, one for the pilot's system and one for the copilot's system, are located on the pilot's overhead console (figure 1-52). Placing a switch to "NORM" provides power from the selected computer channel for operation of the selected stallimiter system. Placing the selected switch to "OFF" interrupts power from the computer to the control column shaker and the audible stall warning.

Stallimiter Audible Warning Switches.

Two stallimiter audible WARNING switches, one located on the pilot's side console (figure 1-52) and the other located on the copilot's side console (figure 1-52), are provided to control the respective audible warning systems. Placing a switch to "NORM" completes a circuit which enables computer signals to turn on the respective tone generator. Placing a switch to "OFF" interrupts signals from the computer to the tone generator.

Stallimiter System Test Switches.

Two stallimiter system TEST switches, one located on the pilot's side console (figure 1-52) and the other located on the copilot's side console (figure 1-52) are provided to test the respective stallimiter systems. Each stallimiter computer channel contains an automatic self-test feature to be used for preflight check. This feature consists of a programmer, simulated signal sources, and comparators to evaluate computer outputs. Placing a switch to the "TEST 1" position causes the respective computer channel to conduct a rapid sequence test. At the completion of a successful test, the shaker and the audible warning system will operate simultaneously. Releasing the switch to "NORM" resets all test circuits. The pilot's shaker and audible warning will continue to operate for three seconds after the switch is released to "NORM." The "TEST 2" position is used in conjunction with the CADC test switch to check that shaker and audible warning onset occur at the correct Mach number.

Stall Lights.

Two STALL lights, one located on the pilot's side console (figure 1-51) and the other located on the copilot's side console (figure 1-52), indicate an approach to a stall condition. Either light comes on when the respective computer channel generates a signal to the shaker motor.

Stallimiter Off Lights.

Two STALLIMITER OFF lights, one for system 1 (pilot's) and one for system 2 (copilot's), are located on the annunciator panel (figure 1-128). A light comes on when the associated STALLIMITER switch is in the "OFF" position or when a failure occurs in that channel.

Stallimiter Audio Off Lights.

Two STALL AUDIO OFF Lights, one for system 1 and one for system 2, are located on the annunciator panel. A light comes ON when the associated stallimiter WARNING switch is in the "OFF" position.

GROUND SPOILER SYSTEM.

Ground spoilers are provided on the upper surface of each wing to increase drag and reduce lift during ground roll, thereby reducing ground roll distance (figure 1-53). The ground spoilers consist of nine panels on each wing. The four inboard panels on each wing are used as ground spoilers only. The five outboard panels on each wing, which are flight control spoilers, are also used as ground spoilers. Each spoiler panel is powered by a tandem hydraulic actuator which utilizes pressure from two hydraulic systems. Each ground spoiler actuator receives pressure from hydraulic systems 1 and 4. The ground spoilers may be deployed only while the airplane is on the ground by use of either of two ground spoilers handles in the flight station. A motor-driven lockout actuator located in the control pedestal, when energized, inserts a locking pin in one ground spoiler handle, mechanically locking both handles in the "CLOSED" position. This motor is energized to unlock the handles and permit ground spoiler deployment when a wheel spin-up and/or touchdown signal is present. To provide a wheel spin-up signal, a spin-up detector is installed on one wheel of each main landing gear. During acceleration, each detector will generate a spin-up signal when the wheel is rotating at a speed equivalent to 20 to 50 knots. During deceleration, the spin-up signal will drop out between 18 and 1 knots. Two spin-up/touchdown relays, energized by main gear wheel spin-up or the main gear touchdown relay system, operates the motor to retract the lockout actuator to the unlock position. In flight, the motor-driven lockout actuator will extend to the lock position on MLG wheel spin-down. To obtain a spin-up and/or touchdown signal for ground spoiler deployment, any one of the following signals must be present:

(1) A spin-up signal from the left forward and right aft main gears.

(2) A spin-up signal from the right forward and left aft main gears.

(3) A touchdown signal from both forward main gears.

(4) A touchdown signal from both aft main gears.

GROUND SPOILER SYSTEM CONTROLS AND INDICATORS.

Ground Spoiler Handles.

Two ground spoiler handles, one on either side of the control pedestal (figure 1-45), have "OPEN" and "CLOSE" positions. The spoiler handles are interconnected by a torque tube that in turn moves the input quadrants of each ground spoiler actuator through a closed loop cable system. An interconnect rod connects the ground spoiler quadrant to each aileron/spoiler mixer boxes. Placing either handle to "OPEN" positions the hydraulic valves in all spoiler actuators to allow pressure to extend the spoilers to 60 degrees. Placing either handle to "CLOSE", positions the hydraulic valves to close all spoilers. A mechanical interlock between the spoiler handles and the No. 1 engine throttle lever moves the spoiler handles to the "CLOSE" position when the throttle is moved forward from the "IDLE" position. This interlock also causes the No. 1 throttle lever to move towards the "IDLE" position when either spoiler lever is moved to the "OPEN" position.

A wheel spin-down signal is required in addition to main gear touchdown relays being de-energized to the air position before the ground spoiler handle lockout becomes operative.

CAUTION

After take-off, the lockout for the ground spoiler handle will remain retracted and allow ground spoiler deployment until the MLG wheels spindown.

Ground Spoiler Handle Lock Override Lever.

A ground spoiler handle lock override lever, located on the control pedestal is provided to physically disengage the ground spoiler handle locking pin. With the locking pin disengaged, the ground spoilers may be deployed at any time.

Ground Spoiler Hydraulic Power Switches.

Four ground spoiler hydraulic power switches, two for the left-hand ground spoilers and two for the right-hand ground spoilers, are located on the pilots' overhead console (figure 1-45). One switch for each side is marked SYS A and the other switch for each side is marked SYS B. Each switch has positions "NORM" and "OFF." Each SYS A switch controls the position of the shutoff and bypass valve for hydraulic system 1 to all ground spoiler actuators in the respective wing. Each SYS B switch controls the position of the shutoff and bypass valve for hydraulic system 4 to all ground spoiler actuators in the respective wing. Thus, if a SYS A switch is placed to "OFF," all ground spoiler actuators in the associated wing will be receiving pressure only from hydraulic system 4. If both the SYS A and SYS B switches on one side are placed to "OFF," the ground spoiler actuators in that wing will be inoperative. The ground spoiler shutoff and bypass valves utilize 115-volt AC power from the aft main AC buses No. 1 and No. 4 (figure 1-70).

Ground Spoiler Hydraulic System Off Lights.

Sixteen ground spoiler hydraulic SYS OFF lights, eight for the left-hand ground spoilers and eight for the right-hand ground spoilers, are located on the pilots' overhead console (figure 1-45). Adjacent pairs of lights indicate the pressure of the two hydraulic systems supplying a single spoiler actuator. When a light comes on it indicates that pressure of the hydraulic system indicated on the light has dropped below 1,450 (±200) PSI in the spoiler hydraulic actuator. The top adjacent pair of lights on either side are for the outboard ground spoiler actuators. The bottom adjacent pair of lights on either side are for the inboard ground spoiler actuators. The lights receive 28-volt DC power from the main DC buses No. 1 and No. 2 (figures 1-67 and 1-68).

Ground Spoiler Quadrant Position Indicator.

On airplanes not modified by T.O. 1324, a ground spoiler quadrant position indicator, located on the pilots' center instrument panel (figure 1-45), displays the words EXTEND or RETRACT to indicate the position of the ground spoiler quadrants. The indicator receives signals from limit switches installed in the ground spoiler input quadrant. The word RETRACT will appear when the spoiler quadrants are in the closed position. A barber pole will be displayed when the spoiler handles are in an intermediate position. The word EXTEND will appear when the spoiler quadrants are in the open position. The indicator receives 28-volt DC power from the main AC bus No. 2 (figure 1-67).

FUEL SUPPLY SYSTEM.

The fuel supply system (figure 1-54) consists basically of twelve wing tanks served by a multi-purpose manifold which is segmented by separation valves to provide an independent supply of fuel for each engine.

The fuel tanks are integral with the wing and consist of the following: four main tanks, four auxiliary tanks, and four extended range tanks. The system is designed so that each engine is normally supplied fuel only from its related main, auxiliary, and extended range tanks. The four main tanks provide direct tank-to-engine fuel, while the auxiliary and extended range tank fuel is first transferred to the main tanks and then to the engines. The system is designed so that transfer of fuel from one set of engine tanks to another is not required. However, the capability exists to transfer fuel from any auxiliary or extended range tank to any other main tank or engine. The fuel capacity (figure 1-55) of the entire fuel supply system is 49,000 gallons. The tanks can be simultaneously or individually pressure refueled from the ground through four single-point refueling receptacles, two on each side of the airplane. The tanks can also be refueled through the aerial refueling system from a KC-135 boom-type tanker airplane. Each main tank is provided with a filler cap on the upper surface of the wing. The airplane may be refueled through these fillers and the fuel transferred to other tanks by using the main tank boost pumps.

FUEL TANKS.

Each main fuel tank is provided with a pump sump box in which the two fuel boost pumps are installed. The purpose of the sump box in the main tanks is to provide an uninterrupted flow of fuel to the engines during abnormal operating conditions such as non-coordinated turns, gusts, steady sideslips, negative "g", and nose up or down attitudes. The sump box is kept full by one-way flapper valves and fuel ejectors which are motivated by boost pump bleed flow. The ejectors are located in the tank so that they will scavenge the residual fuel in the tank and direct it to the sump box. An additional function of the ejectors, since they are located in the low areas of the tanks, is to pick up water, mix it with fuel, and discharge it in the sump. In the case of the main tank pumps, the water is picked up and carried through to the engines. In this manner a thorough mixing of water and fuel is accomplished so that the engine does not receive solid slugs of water. Manual drains for ground removal of tank condensate are also provided.

FUEL TANK PRESSURIZATION.

On 80217 and 70459 modified by T.O. 1387, a fuel tank pressurization subsystem is installed that uses nitrogen gas to maintain a slight positive pressure in the fuel tanks.

The nitrogen gas used for this purpose comes from liquid nitrogen stored in two dewars mounted in the wing-to-fuselage fairing area. The liquid nitrogen is heated and completely gasified by three heat exchangers in each of the outboard main fuel tanks prior to being admitted into each of the vent boxes. From the vent boxes it is distributed to all the fuel tanks through the tank vent system.

Maintaining a slight positive pressure prevents outside air from entering the tanks. The exclusion of oxygen-carrying atmospheric air and the use of nitrogen gas ensures that the ullage (vaporspace) of all fuel tanks is inert or nonflammable. The six fuel tanks in each wing are pressurized as a unit.

The pressure in the fuel tanks is controlled by pressure regulators mounted on each dewar and two valves located in each fuel tank vent box. The control of this subsystem is described under "Fuel Tank Pressurization Control" in this section.

Fuel Tank Pressurization Controls.

The fuel tanks are pressurized automatically whenever the dewars contain liquid nitrogen. Pressure in the fuel tanks is controlled by pressure regulators which maintain a positive pressure and by vent valves which prevent overpressure or underpressure within the preset limits of -0.35 to 1.5 PSI.

The primary pressure regulators control the nitrogen flow from the dewars into the fuel tanks. In case of failure of a primary pressure regulator or lack of nitrogen in the dewar supplying nitrogen to that primary regulator, the secondary pressure regulator will control the nitrogen flow from the other dewar.

Out-of-tolerance pressure is prevented by the vent valve assembly in each wing fuel tank vent box. The vent valve assembly consists of a primary and a secondary climb and dive valve. The primary climb valve opens automatically to vent the fuel tanks because of nitrogen overpressure, atmospheric pressure drop, or airplane climb to a higher altitude. The primary dive valve opens to admit air to relieve fuel tank underpressure due to lack of nitrogen, or rapid descent of the airplane.

In case the primary climb and dive valve fails to open, the secondary climb and dive valve automatically assumes control. In addition, in the event the secondary climb and dive valve fail to open, it can be manually controlled to open both the climb and dive poppets to relieve any over- or underpressure when indicated.

VENT VALVE PUSHBUTTONS. Two vent valve pushbuttons, located under the FUEL TANK PRESSURE WARNING placard, on the flight engineer's NITROGEN FIRE SUPPRESSION control and indicator panel (figure 1-55B) are used to manually open the secondary climb and dive valves in the event an over- or underpressure condition occurs.

If such a condition occurs, the WING PRESS. light on the flight engineer's annunciator panel (figure

1-56B) and the LEFT WING or RIGHT WING FUEL TANK PRESSURE WARNING light on the flight engineer's NITROGEN FIRE SUPPRESSION panel (figure 1-56B) come on. Depressing the illuminated pushbutton (LEFT WING or RIGHT WING) will energize a solenoid-operated valve which supplies hydraulic pressure from the No. 1 hydraulic system to open the selected secondary climb and dive valve. When the VENT SWITCH ON light comes on, both poppets in the secondary climb and dive valves have opened and the fuel tanks for the affected wing are vented to atmospheric pressure. After the fuel tanks are vented, the WING PRESS. and LEFT WING or RIGHT WING FUEL TANK PRESSURE lights go off, but the affected VENT SWITCH ON light remains on.

WARNING

When the out-of-tolerance condition is relieved, do not reset the climb and dive valves. To do so, could cause damage to the fuel tanks and/or wing structure.

The controls receive 28-volt DC power from the isolated DC bus (figure 1-64).

Fuel Tank Pressurization Indicators.

WING PRESSURE WARNING LIGHT. A WING PRESS. warning light on the flight engineer's annunciator panel (figure 1-56B) comes on whenever the primary and secondary climb and dive valves fail to regulate fuel tank pressure. The light receives 28-volt DC power from the isolated DC bus (figure 1-64).

FUEL TANK PRESSURE WARNING LIGHTS. Two FUEL TANK PRESSURE WARNING lights on the flight engineer's NITROGEN FIRE SUPPRESSION control and indicator panel (figure 1-56B) come on whenever failure of the primary and secondary climb and dive valves for the associated wing occurs. The LEFT WING light comes on when the primary and secondary climb and dive valves for that wing fail. The RIGHT WING light comes on when the primary and secondary climb and dive valves for that wing fail. The WING PRESS. light comes on simultaneously with these lights. The FUEL TANK PRESSURE WARNING lights receive 28-volt DC power from the isolated DC bus (figure 1-64).

SECONDARY CLIMB VALVE-CYCLED AND AIR ADMITTED LIGHTS. Actuation of the secondary climb valve turns on one or more of the four lights under the INDICATORS portion of the liquid nitrogen service panel (figure 1-56B). These lights stay on until reset during the preflight or postflight inspection.

The primary and secondary climb and dive valve failure lights receive 28-volt DC power from the isolated DC bus (figure 1-64).

FUEL SCRUBBING.

The decrease of atmospheric pressure during climb causes the fuel to release a flammable gas which then mixes with the vapors already in the ullage. The scrubbing subsystem of the Fire Suppression System (FSS) scrubs or reduces the oxygen dissolved in the fuel. This is done to prevent the release of non-inert (flammable) gas from the fuel thus destroying the inert atmosphere in the fuel tanks. The scrubbing subsystem, therefore, controls the amount of air (oxygen) dissolved in the fuel and released into the fuel tank ullage.

The scrubbing subsystem is completely automatic. The nitrogen for this purpose comes from the two dewars where it is stored in a liquid state. The nitrogen flows through scrub solenoid-operated valves, one mounted on each dewar. They are automatically actuated by a scrub sequencer in a central processing unit (CPU) which is located in the AVIONICS compartment (figure 1-81). The sequencer senses the decrease in atmospheric pressure and automatically turns the scrub valves on and off at predetermined altitudes during climb.

The nitrogen flows through scrub heat exchangers (one in each inboard main tank) where it is heated and completely gassified. The nitrogen is then distributed to each tank through a scrub manifold. The nitrogen then flows through 22 scrub nozzles located near the bottom of the tanks. Fuel from the boost pumps also passes through the nozzles. The flow of fuel and nitrogen through the scrub nozzles produces many small nitrogen bubbles which migrate through the fuel. This action reduces the amount of oxygen dissolved in the fuel. The fuel-nitrogen mixture discharged by the nozzles also provides a stirring action in the fuel to ensure uniform scrubbing action.

Note

During climb, at least one boost pump must be operating in all tanks containing fuel to ensure proper scrubbing action.

FUEL TANK VENTING.

Each fuel tank is vented by a common system which serves all tanks on one side of the airplane. The system is designed to prevent intertank transfer or overboard spillage of fuel under all allowable flight or ground maneuvers. Each vent system terminates at a 100-gallon vent sump in the outboard main tank. The sump vents to atmosphere through a non-icing, flame-arresting outlet. Any fuel which enters the vent lines will be trapped by the sump and scavenged into the outboard main tanks by ejectors motivated by main tank boost pump ejector bleed flow. A float switch is mounted in each vent sump so as to actuate when the sump is approximately half-filled with fuel. Actuation of this switch causes a light on the fuel panel to come on, alerting the flight engineer.

FUEL BOOST PUMPS.

Each fuel tank has two identical electrically driven fuel boost pumps contained in a common housing. Each boost pump will deliver the required engine fuel flow and the required fuel transfer flow. The outboard boost pump is designated the primary pump. The inboard pump in each tank serves as a backup in case of outboard pump failure, or provides increased fuel flow rates for jettisoning and defueling. The two pumps in each tank are powered from separate aft main AC buses (figure 1-70). All boost pump inlets are equipped with 8-mesh screens, with no additional filtration provided between the fuel tank and the engine boost pump inlet.

GRAVITY FUEL FEED.

The fuel system is capable of gravity feed from the main tank to the engine fuel pump in the event of failure of both main tank boost pumps. Fuel is supplied to the left and right auxiliary power units by gravity flow from the sump boxes in the No. 2 and No. 3 main tanks respectively. Refer to Section V for engine suction feed limitations.

FUEL JETTISONING.

Provisions are made for jettisoning fuel so that airplane gross weight may be reduced for landing. Normal fuel jettison is from the auxiliary and extended range tanks. However, in an emergency, fuel may also be jettisoned from the main tanks. The fuel jettison system is designed so that dump rate from the extended range and auxiliary tanks will be at least 1.0 percent of the airplane basic design gross weight per minute for the worst case of low cargo weight and high fuel quantity on board. For cases of higher cargo weight the overall rate will be less than 1.0 percent of basic design gross weight per minute but the time to reach landing weight will not exceed the time for the worst case of maximum fuel on board. Jettison rate for auxiliary tanks only with all auxiliary tank boost pumps on is 5,560 pounds per minute. Jettison rate for extended range tanks only with all extended range tank boost pumps on is 5,360 pounds per minute. Jettison rate for auxiliary tanks and extended range tanks with all boost pumps on is 9,000 pounds per minute.

FUEL SUPPLY SYSTEM CONTROLS.

All of the fuel system controls, with the exception of the engine fire emergency control handles and the aerial refueling disconnect controls, are located on the flight engineer's console (figure 1-56). Pump and valve switches are located on the fuel panel in line graphically at the point where they function. Placing a rotary switch so that it creates an unbroken line on the fuel panel schematic opens the respective valve. Placing the rotary switch perpendicular to the line closes the valve.

Boost Pump Switches.

Boost pump switches, marked PUMPS with positions "ON" and "OFF," are located on the fuel panel (figure 1-56). A separate switch is provided for each of the two pumps in each fuel tank. Each switch controls 115-volt three-phase AC power to the respective pump. The phase C circuit also supplies power to the respective switch and control relay.

Main Tank Fill Switches.

Four rotary main tank FILL switches are located on the fuel panel (figure 1-56). These switches, which control the main tank refuel valves, are open during normal transfer operation to permit fuel from the auxiliary and extended range tanks to enter the main tank. When the switches are open, the main tank refuel valves are opened and closed mechanically by floats, which maintain full main tank fuel level and prevent overfilling. When the fill switches are closed, the valves are electrically closed, overriding the mechanical floats. Power for operation of the normally open main tank refuel valves is from the 115-volt forward main AC buses No. 2 and No. 3 (figures 1-65 and 1-60).

Center Separation Switch.

A rotary center SEPARATION switch (figure 1-56) on the fuel panel is used to control the 28-volt DC valve which separates the left wing fuel system from the right wing fuel system. This valve is normally closed but may be opened to transfer fuel from one wing to the other. The switch receives power from the 28-volt DC battery bus (figure 1-64).

Left and Right Separation Switches.

Two rotary SEPARATION switches (figure 1-56) on the fuel panel are used to control 28-volt DC valves which separate one engine fuel system from another. The left separation valve separates the No. 1 engine fuel system from the No. 2 engine fuel system, and the right separation valve separates the No. 3 and No. 4 engine fuel systems. These valves are normally closed, but may be opened to jettison fuel or to transfer fuel from one set of engine fuel tanks to the adjacent main tank or engine. The switches receive power from the 28-volt DC battery bus (figure 1-64).

Isolation Switches.

Four rotary isolation switches are located on the fuel panel (figure 1-56). The switches are used to control 115-volt AC valves which permit fuel transfer directly from the auxiliary and extended range fuel tanks to the respective engine. The valves are normally closed, but may be used for engine feed in the event of main tank boost pump failure. The switches receive single-phase power from the 115-volt isolated AC bus (figure 1-64).

Crossfeed Switches.

Two CROSSFEED switches, located on the fuel panel (figure 1-56), are used to control 115-volt AC valves installed in the crossfeed manifolds. The left crossfeed manifold joins the output of the No. 1 main tank to the output of the No. 2 main tank. The right crossfeed manifold joins the output of the No. 3 and No. 4 main tanks. The crossfeed valves are normally closed, but may be opened to supply fuel from one main tank to the adjacent engine. The switches receive single-phase power from the 115-volt isolated AC bus (figure 1-64).

Jettison Switches.

Two guarded JETTISON switches, located on the fuel panel (figure 1-56), are provided to control the 115-volt AC jettison valves in each outer wing. Raising the guard and placing a switch to "JETTISON" will open the respective jettison valve and allow fuel from the manifold to exit through the jettison mast. The switches receive single-phase power from the 115-volt isolated AC bus (figure 1-64).

Sump Low Test Switches.

Two sump low test switches (MAIN 1 SUMP LOW TEST and MAIN 4 SUMP LOW TEST) are located on the fuel panel (figure 1-56). These switches have two test positions and a spring-loaded OFF position. The test "1" position tests the warning system for open circuits. The test "2" position tests for shorts in the warning circuit. The associated SUMP LOW light on the fuel panel and the SUMP LOW light on the pilot's annunciator panel come on when the test switch is in either test position.

Engine Fire Emergency Control Handles.

Four engine fire emergency control handles (figure 1-15), one for each engine, are located at the top center of the main instrument panel. The handles are marked FIRE PULL and are used to control the engine fire emergency shutoff valves. Each handle is mechanically connected by a cable system to its respective fuel shutoff valve which is located in the engine fuel feed line at the wing front beam. Pulling a handle out will close the associated shutoff valve. Pushing the handle in will re-open the valve.

FUEL SUPPLY SYSTEM INDICATORS.

Fuel Quantity Indicators.

Twelve fuel quantity indicators, one for each fuel tank, are located on the fuel panel (figure 1-56). Fuel quantity is measured in pounds by capacitor units in each tank. Each indicator is provided with a fuel level control for use during ground or air refueling operations. The desired amount of fuel to be placed in a tank is selected by a knob and small pointer on the respective tank fuel quantity indicator. When fuel in the tank reaches the selected amount, the indicator generates a signal to close the tank refuel valves, stopping flow of fuel into the tank. Each fuel quantity indicator is equipped with a test button to check for proper operation of the fuel gaging system. If the tank is empty, pressing the test button will cause the needle to move to a green dot representing 68 percent total capacity. If the tank contains fuel, depressing the test button will cause the needle to move to a green dot representing 50 percent total capacity. The fuel quantity indicators receive 115-volt AC power from the forward main AC buses No. 1, No. 2, No. 3, and No. 4 (figures 1-65 and 1-66).

Tank Low Lights.

Two tank low lights labeled MAIN 1 TANK LOW and MAIN 4 TANK LOW are located on the fuel panel (figure 1-56). A TANK LOW light is also located on the pilots' annunciator panel. The main tank low lights come on when the respective fuel quantity indicator indicates below 75 percent full. At the same time, the TANK LOW light on the pilots' annunciator panel will flash on and off. The main tank low lights receive 28-volt DC power from the main DC bus No. 1 (figure 1-68).

Total Fuel Quantity Indicator.

A total fuel quantity indicator, located on the fuel panel (figure 1-56), indicates, by a radial dial and a digital readout, the total amount of fuel contained in all fuel tanks. The indicator receives 115-volt AC power from the forward main AC bus No. 2 (figure 1-66).

Fuel Manifold Pressure Indicators.

The fuel manifold pressure indicators, located on the fuel panel (figure 1-56), are provided to indicate pressure in each inboard fuel manifold segment. The indicators are graduated from 0 to 100 PSI in 5-PSI increments. Each indicator receives signals from a pressure transmitter installed in the respective inboard segment of the fuel manifold. The indicators and pressure transmitters receive 26-volt AC power from the AC instrument buses No. 2 and No. 3 (figures 1-65 and 1-66).

Sump Low Lights.

Two sump low lights labeled MAIN 1 SUMP LOW and MAIN 4 SUMP LOW are located on the fuel panel (figure 1-56). The lights come on when the fuel quantity in the 1,807-pound sump located in each outboard main tank drops below 1,600 pounds. A SUMP LOW light located on the pilots' annunciator panel flashes when either light on the fuel panel is on. The sump low lights receive 28-volt DC power from the main DC bus No. 1 (figure 1-68).

Vent Fill Lights.

Two VENT FILL lights, one for each fuel vent box, are located on the fuel panel (figure 1-56). Either light comes on when the float switch in the respective fuel vent box closes, indicating that the vent box is at least half filled with fuel. The left and right VENT FILL lights and float switches receive 28-volt DC power from the main DC bus No. 1 (figure 1-68).

Manifold Pressure Low Lights.

Four manifold PRESS LOW lights, one for each segment of the fuel manifold, are located on the fuel panel (figure 1-56). Each light on the panel is connected schematically to its appropriate manifold segment. A PRESS LOW light comes on when any of the associated auxiliary or extended range boost pump switches are "ON" and pressure in the manifold segment falls below 6 (±1) PSIG. The manifold PRESS LOW lights and pressure switches receive 28-volt DC power from the main DC buses No. 1 and No. 2 (figures 1-67 and 1-68).

Boost Pump Pressure Low Lights.

Four boost pump PRESS LOW lights, one for each engine, are located on the fuel panel (figure 1-56). A

PRESS LOW light comes on when fuel pressure at the respective engine fuel inlet drops below 11 (±1) PSI. The boost pump PRESS LOW lights and pressure switches receive 28-volt DC power from the main DC buses No. 1 and No. 2 (figures 1-67 and 1-68).

Boost Pump Out Lights.

Four boost PUMP OUT lights, one for each engine-driven fuel boost pump, are located on the fuel panel (figure 1-56). A PUMP OUT light comes on when the difference between the input and output pressures of the respective engine-driven fuel boost pump drops below 30 PSI. The boost PUMP OUT lights and pressure switches receive 28-volt DC power from the main DC buses No. 1 and No. 2 (figures 1-67 and 1-68).

Filter Differential Pressure Light.

Four FILTER DIF PRESS lights, one for each engine fuel filter, are located on the fuel panel (figure 1-56). A FILTER DIF PRESS light comes on when the difference between the input and output pressures of the respective filter rises above 11 (±1) PSI. The FILTER DIF PRESS lights receive 28-volt DC power from the main DC buses No. 1 and 2 (figures 1-67 and 1-68).

STANDARD FUEL SYSTEM MANAGEMENT.

Normal flight operations will be conducted supplying fuel to each engine directly from the main tank with all valves, except the main tank fill valves, closed. Extended range and auxiliary fuel will be used by first transferring it to a main tank and then to the engine.

Take-off and Landing Fuel Management.

Take-offs and landings are made with the engines being supplied fuel from their respective main tanks with one boost pump in each tank running. All auxiliary and extended range tank pumps are off and the main tank FILL valves are closed. During these phases of flight, the cross-ship manifold is not pressurized and complete engine independence is maintained.

In-Flight Fuel Management.

On airplanes modified by T.O. 1387, after take-off, the main tank FILL valves are opened, both boost pumps in each outboard main tank are turned on, and one boost pump in each of the other tanks containing fuel is turned on. During the climb to cruise altitude, these pumps are operated continuously to ensure nitrogen scrubbing of the fuel in the tanks. Upon reaching cruise altitude, the inboard boost pump in each outboard main tank and the operating boost pump in each auxiliary tank are turned off. Fuel from the extended range tanks is transferred to the respective main tanks as required for engine consumption. The transfer to the main tanks will be continuous, with the main tank fill valve operating to maintain the selected tank level to match engine consumption. At depletion of extended range fuel, as evidenced by the PRESS LOW lights in the respective fuel manifold segment coming on steady, the outboard pumps in the auxiliary tanks are turned on and the extended range tank pumps are turned off. At depletion of auxiliary tank fuel, the auxiliary tank pumps are turned off and the main tank fill valves are closed; the engines will be supplied fuel from the main tanks only. A drain valve near each end of the cross-ship manifold permits the draining of this line into the vent boxes, from which it is scavenged into the outboard main tanks to reduce unusable fuel. To reduce unusable fuel, hold the LINE DRAINS switch on the fuel panel to "MANF" for 15 minutes. If a second or any subsequent climb is made above the initial or previous cruise altitude, the inboard boost pump in each outboard main tank is turned on and one boost pump in each extended range and/or auxiliary tank still containing fuel is turned on. On attaining the new cruise altitude, the inboard boost pump in each outboard main tank is turned off and any pumps in the remaining tanks not required for fuel system management are also turned off. If in-flight refueling is accomplished during the mission and a cruise altitude above the refueling altitude is selected, boost pump operation during the climb must be the same as that for initial climb until the new cruise altitude is reached.

On airplanes not modified by T.O. 1387, after take-off the main tank FILL valves are opened and the outboard pump in each extended range tank is turned on and fuel from these tanks is transferred to the respective main tanks as required by engine consumption. The transfer to the main tanks will be continuous with the main tank fill valve operating to modulate the transfer rate to match engine consumption. At depletion of extended range fuel, as evidenced by the PRESS LOW lights in the respective fuel manifold segment coming on steady, the outboard pumps in the auxiliary fuel tanks are turned on and the extended range tank pumps are turned off. At depletion of auxiliary fuel, the auxiliary tank pumps are turned off and the main tank fill valves are closed and the engines will be supplied fuel from the main tanks only. A drain valve near each end of the cross-ship manifold permits the draining of this line into the vent boxes, from which it is scavenged into the outboard main tanks to reduce unusable fuel. To reduce unusable fuel, hold the LINE DRAINS switch on the fuel panel to "MANF" for 15 minutes.

Fuel Panel Control Positions.

ENGINE START, TAXI, ENGINE RUN-UP, AND TAKE-OFF.

Any Combination of Fuel Load:

1. All Tank Fill Valves - CLOSED
2. Crossfeed Valves - CLOSED
3. Separation Valves - CLOSED

4. Isolation Valves - CLOSED
5. Main Tank Outboard Boost Pumps - ON
6. Extended Range and Auxiliary - Tank Outboard Boost Pumps - OFF
7. All Inboard Boost Pumps - OFF

CLIMB (FSS INSTALLED)

On airplanes modified by T.O. 1387:

Fuel in all tanks.

1. Main Tank Auto Refill Bugs - AS REQUIRED
2. Auto Ref Switch - AS REQUIRED
3. Main Tank Fill Valves - OPEN

CAUTION

Observe fuel quantity limits in Section V. Main fuel tanks will hold a greater amount of fuel in flight due to up bending of the wing.

4. Auxiliary and Extended Range Tank Refuel Valves - CLOSED
5. Main Tank Inboard Boost Pumps - ON
6. One Boost Pump in each Extended Range and Auxiliary Tank Containing Fuel - ON

CRUISE (FSS INSTALLED).

On airplanes modified by T.O. 1387:

Fuel in all tanks.

1. Main Tank Inboard Boost Pumps - OFF WHEN AT CRUISE ALTITUDE
2. Auxiliary Tank Boost Pumps - OFF WHEN AT CRUISE ALTITUDE

After Extended Range Tanks are Depleted:

1. Auxiliary Tank Outboard Boost Pumps - ON
2. Extended Range Tank Outboard Boost Pumps - OFF

After Auxiliary Tanks are Depleted:

1. Auxiliary Tank Outboard Boost Pumps - OFF
2. Main Tank Fill Valves - CLOSED

CLIMB AND CRUISE (FSS NOT INSTALLED).

On airplanes not modified by T.O. 1387:

Fuel in All Tanks:

1. Main Tank Auto Refill Bugs - AS REQUIRED
2. Auto Ref Switch - AS REQUIRED
3. Main Tank Fill Valves - OPEN

CAUTION

Observe fuel tank quantity limits in Section V. Main fuel tanks will hold a greater amount of fuel in flight due to up bending of the wing.

4. Auxiliary and Extended Range Tank Refuel Valves - CLOSED
5. Extended Range Tank Outboard Boost Pumps - ON

After Extended Range Tanks are Depleted:

1. Auxiliary Tank Outboard Boost Pumps - ON

2. Extended Range Tank Outboard Boost Pumps - OFF

After Auxiliary Tanks are Depleted:

1. Auxiliary Tank Outboard Boost Pumps - OFF

2. Main Tank Fill Valves - CLOSED

LANDING.

1. Same as Take-off

GO-AROUND.

1. Same as Take-off

When making a series of landings and/or go-arounds, the CLIMB AND CRUISE fuel management procedures should be used.

ENGINE SHUTDOWN.

1. All Fuel Switches - OFF

2. All Fuel Valves - CLOSED

ALTERNATE FUEL SYSTEM MANAGEMENT.

Alternate fuel system management is provided to reduce the wing bending moment and to increase the wing life. Alternate fuel system management shall be used for all flights except:

a. When the main tank auto refuel system or any main tank quantity indicator is inoperative.

b. When accomplishing ADS operations.

c. When the zero fuel weight C.G. falls within an area that requires the use of standard fuel system management.

d. When the cargo load is 50,000 pounds or less for the initial take-off. During operational stops, if cargo is off-loaded and less than 50,000 pounds remain on board, it is not necessary to transfer fuel to the standard sequence if the airplane C.G. is within limits for alternate fuel sequence.

e. On airplanes modified by T.O. 1387 (Fuel Tank Inerting and Fire Suppression System)

Note

When fuel is not loaded in accordance with the desired fuel management sequence, the flight engineer will transfer fuel as required before take-off.

Fuel management will depend upon the total fuel contained in the airplane.

When the fuel quantity is between 266,496 and 318,496 pounds, supply fuel to each engine from its corresponding main tank. Transfer fuel from the No. 2 and 3 extended range tanks into the appropriate pairs of main tanks until the No. 2 and 3 extended range tanks are depleted. During this time, all main tanks will remain full while the No. 1 and 4 extended range and all auxiliary tanks remain full with boost pumps off.

When the fuel quantity is between 237,372 and 266,496 pounds, supply fuel to the engines directly from the No. 2 and 3 main tanks until each contains a total of 9,000 pounds. During this part of the sequence, the No. 1 and 4 main tanks, the No. 1 and 4 extended range tanks and all auxiliary tanks remain full with boost pumps off.

When the fuel quantity is between 185,372 and 237,372 pounds, transfer fuel from the No. 1 and 4 extended range tanks into their corresponding pairs of main tanks until the No. 1 and 4 extended range tanks are depleted. During this part of the sequence, the No. 1 and 4 main tanks remain full, the No. 2 and 3 main tanks will be maintained at 9,000 pounds each, and the auxiliary tanks remain full with boost pumps off.

When the fuel quantity is between 65,124 and 185,372 pounds, transfer auxiliary tank fuel into corresponding main tanks until all auxiliary fuel is used. During this part of the sequence, the No. 1 and 4 main tanks will remain full and the No. 2 and 3 main tanks will be maintained at 9,000 pounds each. All auxiliary tanks contain equal volumes and will be depleted at approximately the same time.

When the fuel quantity is between 36,000 and 65,124 pounds, supply fuel to the engines directly from the No. 1 and 4 main tanks until each contains a total of 9,000 pounds. During this part of the sequence the No. 2 and 3 main tank boost pumps are off and the fuel level maintained at 9,000 pounds.

When the fuel quantity is 36,000 pounds or below, supply fuel to each engine from its corresponding main tank.

Fuel Loading.

When alternate fuel sequencing is required, fuel loads will be configured as shown in figure 1-55A.

Fuel Panel Control Positions.

Fuel panel settings will depend upon the fuel load and phase of flight. Fuel panel settings are as follows for the various fuel loads:

FUEL LOADS BETWEEN 266,500 and 318,500 POUNDS.

1. Crossfeed Valves - CLOSED

2. Isolation Valves - CLOSED

3. Main Tank Auto Refill Bugs - SET 23,500

4. Main Tank Fill Valves - OPEN

5. Auto Ref Switch - AUTO

6. Left and Right Separation Valves - OPEN

7. Main Tank Outboard Boost Pumps - ON

8. No. 2 and 3 Extended Range Tank Outboard Boost Pumps - ON

9. All Remaining Boost Pumps - OFF

10. Auxiliary and Extended Range Tank Refuel Valves - CLOSED

FUEL LOADS BETWEEN 65,000 AND 266,500 POUNDS (ENGINE START, TAXI AND TAKE-OFF).

FUEL LOADS BETWEEN 65,000 and 237,500 POUNDS (CLIMB, CRUISE, DESCENT AND LANDING).

1. Crossfeed Valves - CLOSED

2. Isolation Valves - CLOSED

3. No. 1 and 4 Main Tank Auto Refill Bugs - SET 23,500

4. No. 2 and 3 Main Tank Auto Refill Bugs - SET 9,000

5. Main Tank Fill Valves - OPEN

6. Auto Ref Switch - AUTO

7. Left and Right Separation Valves - AS REQUIRED

Open the separation valves if the No. 1 and 4 extended range tanks contain fuel. Close the separation valves when the extended range tanks are emptied.

8. Main Tank Outboard Boost Pumps - ON

9. No. 1 and 4 Extended Range Tank Outboard Boost Pumps - AS REQUIRED

Turn on the outboard boost pumps if the tanks contain fuel.

10. Auxiliary Tank Outboard Boost Pumps - AS REQUIRED .

Turn on the outboard boost pumps when the No. 1 and 4 extended range tanks are emptied.

11. All Remaining Boost Pumps - OFF

12. Auxiliary and Extended Range Tank Refuel Valves - CLOSED

FUEL LOADS BETWEEN 237,500 and 266,500 POUNDS (CLIMB, CRUISE, DESCENT, AND LANDING).

1. Crossfeed Valves - OPEN

2. No. 2 and 3 Main Tank Inboard and Outboard Boost Pumps - ON

3. All Remaining Boost Pumps - OFF

FUEL LOADS UP TO 65,000 POUNDS (ENGINE START, TAXI, AND TAKE-OFF).

1. Crossfeed Valves - CLOSED

2. Isolation Valves - CLOSED

3. Separation Valves - CLOSED

4. Main Tank Outboard Boost Pumps - ON

5. All Remaining Boost Pumps - OFF

Note

During prolonged ground operation, maintain 9,000 pounds of fuel in the No. 2 and 3 main tanks.

FUEL LOADS UP TO 65,000 POUNDS (CLIMB, CRUISE, DESCENT, AND LANDING).

1. Crossfeed Valves - OPEN

2. No. 1 and 4 Main Tank Inboard and Outboard Boost Pumps - ON

3. All Remaining Boost Pumps - OFF

Note

When the fuel level in No. 1 and 4 main tanks is equal to No. 2 and 3 main tanks, resume tank-to-engine flow with crossfeed closed.

SINGLE POINT REFUELING AND DEFUELING SYSTEM.

Single point refueling or defueling may be accomplished through all or any one of four receptacles, two of which are located on each side of the airplane. The system is capable of filling any or all tanks to a level selected on the appropriate fuel quantity gage. The four receptacles permit refueling at the rate of 2,400 gallons per minute, at a nozzle pressure of 50 (±5) PSI. Assuming the main tanks contain 10 percent of total fuel volume (49,000 gallons) the airplane can be refueled to capacity in approximately 19 minutes. The system is designed so that all tanks will reach full simultaneously (assuming 10 percent total capacity is in main tanks and all others are empty). All refueling or defueling operations are controlled from the flight engineer's fuel panel. When refueling, fuel enters the tanks through float operated refuel valves which are closed by the float when the tank reaches capacity. These refuel valves may also be closed electrically by the refuel valve switches or automatically when the tank quantity reaches the level selected on the tank fuel quantity indicator. Single point defueling is accomplished by using the airplane boost pumps to pump fuel through the fuel manifold and out the single point fueling adapters.

SINGLE POINT REFUELING AND DEFUELING SYSTEM CONTROLS AND INDICATORS.

Auto Refuel Switch.

A two-position AUTO REF switch, located on the fuel panel (figure 1-56), is provided to select either the manual or automatic mode for refueling. During refueling, with the switch in "MAN", the tanks will fill until the refuel valves are closed by the valve floats or closed by manually placing the individual tank switches to "CLOSE". The floats close the valve at tank capacity. In the "AUTO" position, the refuel valves will close when the tank quantity reaches the level selected on the fuel quantity indicator. When this selected level is reached, the fuel quantity indicator completes a circuit causing the respective refuel valve to close. The switch receives 28-volt DC power from the isolated DC bus (figure 1-64).

Pre Check Selector Switch.

A three-position PRE CHECK selector switch, located on the fuel panel (figure 1-56), is provided to check the primary and secondary solenoids in each refuel valve. Placing the switch to "PRI" or "SEC", with the corresponding refuel valve switch in "REF" and the corresponding FILL valve switch in the OPEN position energizes the appropriate solenoid to shut off valve pilot flow in each fuel tank. When the switch is in either of these positions, all fuel valves will close and fuel is prevented from entering the tanks. These switches and solenoids receive 115-volt AC power from the forward main AC buses No. 2 and No. 3 (figures 1-65 and 1-66).

Refuel Valve Switches.

Each auxiliary and extended range fuel tank refill valve is controlled by a two-position refuel valve switch. The switches are located on the fuel panel adjacent to the respective fuel tank quantity indicator (figure 1-56). Placing a switch to "CL" (close) energizes both solenoids of the respective refuel valve to close the valve. This signal overrides any other valve-open signal. Placing the switch to "REF" (refuel) deenergizes the solenoids and opens the valve. In the "REF" position, the valve will be closed either by action of the floats when the tank is full or automatically during the auto refuel mode. The switches receive 115-volt AC power from the forward main AC buses No. 2 and No. 3 (figures 1-65 and 1-66).

Ground Refuel Switches.

Two GRD REFUEL switches are located on the fuel panel (figure 1-56). The left GRD REFUEL switch is used to control the ground refuel isolation valve, the ground refuel line drain valve, and the drain pump in the ground refueling inlet line for the left wing fuel system. The right GRD REFUEL switch controls identical components in the ground refueling inlet line for the right wing fuel system. Placing a switch to "REF" (refuel), opens the respective ground refuel isolation valve, allowing fuel to be pumped in or out of the associated wing fuel tanks. Placing a switch to "DRAIN", closes the ground refuel isolation valve, opens the ground refuel line drain valve and energizes the drain pump. In this position, fuel in the ground refueling lines will be pumped into the associated inboard main tank. In the "OFF" position, both valves are closed and the drain pump is deenergized. The ground refuel isolation valves receive 28-volt DC power through the GRD REFUEL switches from the battery bus (figure 1-64). The ground refuel line drain valves and drain pumps receive 115-volt AC power through the GRD REFUEL switches from the forward main AC buses No. 2 and No. 3 (figures 1-65 and 1-66).

SINGLE POINT REFUELING AND DEFUELING SYSTEM OPERATION.

For procedures on ground refueling or defueling, refer to T.O. 1C-5A-2-1.

AERIAL REFUEL SYSTEM.

The aerial refuel system provides a means of refueling any or all tanks from a boom-type tanker airplane. Fuel is transferred from the tanker boom through a receptacle located on top of the airplane above the flight engineer's station. Fuel from the receptacle flows through a "Y" to two aerial refuel isolation valves and from there to the left and right fuel manifolds. Fuel from the manifold flows into the airplane tanks through the tank refuel valves. The receptacle is normally covered by a hydraulically actuated door which is hinged along the forward edge to the skin structure. When retracted, the aft end of the door moves down to expose the receptacle. In this position, the door serves as a boom slipway. The receptacle is equipped with an induction coil that mates with a similar coil in the tanker boom. The purpose of the coil is to transfer refueling system sequence signals from one airplane to another.

AERIAL REFUEL SYSTEM CONTROLS.

Aerial Refuel Electric Power Switch.

A two-position ELEC PWR switch, located on the AERIAL REFUEL portion of the fuel panel (figure 1-56), is used to provide power for aerial refuel system operation. Placing the switch to "REF" (refuel) supplies power to the DOOR switch, the BOOM LATCH switch, and to the aerial refuel system amplifier. The "RADAR" position of the switch is not used in the aerial refuel system. The switch receives 28-volt DC power from the isolated DC bus (figure 1-64).

Aerial Refuel Door Switch.

A two-position DOOR switch is located on the AERIAL REFUEL portion of the fuel panel (figure 1-56). Placing the switch to "OPEN" energizes a solenoid-operated shutoff valve which directs hydraulic pressure to the aerial refuel door actuating cylinder and opens the door and directs pressure to the latch control valves. In the "CLOSE" position, hydraulic pressure is directed to close the door.

Aerial Refuel Boom Latch Switch.

A two-position BOOM LATCH switch, located on the AERIAL REFUEL portion of the fuel panel (figure 1-56), is used to select either the normal or emergency mode for latching the aerial refuel boom into the receptacle. In the "NORM" position, the signal amplifier will generate a boom latch signal when the boom actuates a boom-seated limit switch in the receptacle. The "EMERG" position provides power directly from the ELEC PWR switch through the boom-seated limit switch to the boom latches. The normal or emergency boom latch signals energize normal or emergency solenoid operated shutoff valves. When either of these solenoid valves are energized, hydraulic pressure is directed to actuators which extend boom latching toggles to lock the boom in the receptacle. When both solenoid valves are deenergized, the boom latching toggles will move to the unlocked position.

Aerial Refuel Isolation Valve Switches.

Two aerial refuel isolation valve switches are located on the AERIAL REFUEL portion of the fuel panel (figure 1-56). The switches control the left and right aerial refuel valves through which fuel flows to the left and right wing fuel manifolds. In the "REF" position, the valves are open and in the "OFF" position the valves are closed. The valves and switches receive 115-volt AC power from the isolated AC bus (figure 1-64).

Fuel Line Drains Switch.

A three-position LINE DRAINS switch, located on the fuel panel (figure 1-56), is used to drain the aerial

refuel lines or the fuel manifold. In the "AIR REF" position, power is supplied to open the aerial refuel line drain valve and energize the drain pump. Fuel trapped in the aerial refuel lines is pumped into the No. 3 main fuel tank. Holding the switch in "MANF" supplies power to open drain valves located near the outboard ends of the left and right wing fuel manifolds. Fuel from the manifolds drains into the respective vent box.

In the "OFF" position, all drain valves are closed and the drain pump is deenergized. The drain valves, drain pump, and switch receive 115-volt AC power from the forward main AC bus No. 1 (figure 1-66).

Aerial Refuel Disconnect Buttons.

Two A/R DISC buttons, one located on the outboard grip of each control wheel (figure 1-44), are used to unlock the boom toggle latches in the refueling receptacle. Depressing either button energizes a relay which interrupts power to both the normal and emergency toggle latch solenoid valves.

Manual Aerial Refuel Slipway Door Handle.

A manual aerial refuel slipway door handle, located above the overhead hardliner between the navigator's and flight engineer's stations, is used to open the slipway door if hydraulic power is not available. Rotating the handle counterclockwise opens the door and rotating the handle clockwise releases the door actuation link, but does not close the door.

Alternate Aerial Refuel Light Switch.

A two-position ALT AERIAL REFUEL LT SW is located forward of the manual aerial refuel slipway door handle. The switch is spring-loaded to the "OFF" position. In the event the aerial refuel receptacle lights do not come on after the slipway door is open, the switch is held in the "ON" position to turn on the receptacle lights.

AERIAL REFUEL SYSTEM INDICATORS.

Aerial Refuel Receptacle Flood Lights.

Two aerial refuel receptacle flood lights located in the aerial refuel receptacle come on when the slipway door is opened. The intensity of the lights is controlled by the AERIAL REFUEL lights switch on the pilots' overhead console. In the event the receptacle flood lights do not come, the ALT AERIAL REFUEL LT switch is held to the "ON" position until boom latching occurs. The receptacle flood lights receive 115-volt AC power from the forward main AC bus No. 2 (figure 1-66).

Aerial Refuel Ready Lights.

Two aerial refuel READY lights are provided. One is located on the pilot's overhead console (figure 1-12) and the other located on the fuel panel (figure 1-56). When the refueling door is opened, a limit switch is made which provides power from the signal amplifier to both READY lights. The lights indicate that the air refueling door is open and that the signal amplifier is in the ready mode. The READY lights do not come on while in the emergency mode.

Aerial Refuel Door Not Locked Light.

A REFUEL DOOR NOT LOCKED light, located on the flight engineer's console (figure 1-56) comes on whenever the aerial refuel door is not in the closed and locked position. When the door actuating linkage moves from the locked (over center) position, a limit switch closes, completing a circuit to the light.

Aerial Refuel Boom Latch Lights.

Two aerial refuel boom LATCHED lights, one located on the pilot's overhead console (figure 1-12) and the other located on the fuel panel (figure 1-56), come on when the boom is latched into the receptacle. When the toggle latches are extended a limit switch closes to complete a circuit to the lights.

Aerial Refuel Boom Disconnect Lights.

An aerial refuel boom DISCONNECT light, located on the pilot's overhead console (figure 1-12) will come on whenever the ELEC PWR switch is in "REF" and the aerial refuel boom is not positioned in the receptacle. A limit switch in the receptacle is closed whenever the boom is not in position. When closed, this limit switch completes a circuit providing power from the ELEC PWR switch to the DISCONNECT light.

AERIAL REFUEL SYSTEM NORMAL OPERATION.

Refer to T.O. 1-1C-1-23 for normal operation of the aerial refuel system.

AERIAL REFUEL SLIPWAY DOOR MANUAL OPERATION.

In the event the normal door open procedure does not open the doors, accomplish the following:

1. Attach ratchet wrench (stowed adjacent to the manual operating shaft) to the hexagonal end of the

shaft that protrudes from the bottom of the slipway pan.

2. Rotate the wrench counterclockwise until the aerial refuel READY light comes on.

ELECTRICAL POWER SUPPLY SYSTEM.

Alternating current (200/115-volt AC) is used as a basic power source, and is normally furnished by four generators driven by the engines through constant speed drive units. Direct current (28-volt DC) is provided normally by the AC system through the use of two transformer-rectifiers. In an emergency, the amount of AC and DC power required to maintain operation of the basic flight and engine instruments and the minimum warning control, navigation, and communication systems, is supplied by a hydraulically driven AC/DC generator. On the ground, AC power can be supplied by an external source which is plugged into the external power receptacle, or by either of two APU-driven auxiliary AC generators. Two 24-volt batteries are installed to provide an additional source of DC power. Circuit protection is provided by circuit breakers, current limiters, or fuses. During normal operation, the airplane has a paralleled AC and a paralleled DC system. Operation and protection of each system is completely automatic, requiring only visual monitoring by the flight crew for normal operation. No single failure or probable combination of failures will result in a complete loss of electrical power.

CIRCUIT BREAKER PANELS.

The flight engineers circuit breaker panels and the circuit breaker panels for the forward main AC buses, isolated AC and DC buses, main DC buses, and the battery bus are color coded to provide a convenient method of determining the airplane system powered through the circuit breakers. The following is a list of airplane systems and the colors used to identify them:

Engine - Purple
Fuel - Blue
Flight Controls and Hydraulics - Gray
Environmental - Green
Engine Instruments (26 VAC) - Black
Electrical and Miscellaneous - Brown

Certain groups of circuit breakers are controlled by individual guarded ground switches located on the circuit breaker panels. The circuit breakers and the switch that controls them are enclosed in a cross-hatch design. By this method it is quite obvious which circuit breakers are controlled by the various switches.

The circuit breaker index guide lists all circuit breakers to provide a quick reference for circuit breaker location. Systems and circuit breakers are listed in alphabetical order.

CIRCUIT BREAKER INDEX GUIDE.

CIRCUIT BREAKER	POWER	BUS	FIGURE
AIR CONDITIONING SYSTEM.			
Air Cond LH	28-VDC	Main DC No. 1	1-68
Air Cond RH	28-VDC	Main DC No. 2	1-67
Cargo Fan Recirculating	115-VAC	Monitor AC No. 3	1-70
Cargo Recirc Fan Control	115-VAC	Fwd Main AC No. 3	1-65
Cargo Temp Control	115-VAC	Fwd Main AC No. 1	1-66
Cargo Temp Ind	28-VDC	Main DC No. 1	1-68
Diverter Valve	115-VAC	Fwd Main AC No. 3	1-65
Ht Exch Ovht Turbine Time Ind	115-VAC	Aft Main AC No. 4	1-70
LH Air Cond Flow Cont	28-VDC	Emergency DC	1-61
LH Air Cond Heat Exch Cooling	28-VDC	Emergency DC	1-61
LH Air Cond Low Limit	115-VAC	Aft Main AC No. 1	1-70
LH Air Cond Turbine Time Ind	115-VAC	Aft Main AC No. 1	1-70

CIRCUIT BREAKER	POWER	BUS	FIGURE
LH Heat Exch Cooling	115-VAC	Emergency AC	1-61
LH Ht Exch Ovht/Altr Air Valve	115-VAC	Emergency AC	1-61
Ram Air Valve	115-VAC	Emergency AC	1-61
RH Air Cond Flow Cont	28-VDC	Main DC No. 2	1-67
RH Air Cond Heat Exch Cooling	28-VDC	Main DC No. 2	1-67
RH Air Cond Heat Exch Cooling	115-VAC	Aft Main AC No. 4	1-70
RH Air Cond Low Limit	115-VAC	Aft Main AC No. 4	1-70
Temp Cont Flight Station	115-VAC	Fwd Main AC No. 4	1-65
Temp Cont Relief Crew	115-VAC	Fwd Main AC No. 4	1-65
Temp Cont Troop	115-VAC	Fwd Main AC No. 4	1-65
Temp Ind Relief Crew	28-VDC	Main DC No. 2	1-67
Temp Ind Troop	28-VDC	Main DC No. 2	1-67
Troop Air Control	115-VAC	Fwd Main AC No. 1	1-66
AIR DROP SYSTEM (ADS).			
ADS Actr	28-VDC	Main DC No. 2	1-67
ADS Control & Pos Ind Lt	28-VDC	Main DC No. 2	1-67
Jump & Caution Light	28-VDC	Main DC No. 1	1-68
AIR TURBINE MOTORS.			
Hyd ATM ISO Cont	28-VDC	Batt	1-64
Hyd ATM ISO Ind Lt	28-VDC	Batt	1-64
Hyd ATM Sys 1 Cont & Ind Lt	28-VDC	Batt	1-64
Hyd ATM Sys 4 Cont & Ind Lt	28-VDC	Main DC No. 2	1-67
Hyd ATM Sys Priority	28-VDC	Main DC No. 2	1-67
ANTI-ICING AND DE-ICING SYSTEMS.			
Engine Anti-Icing System.			
De-Ice Htr Ice Detector Probe	115-VAC	Fwd Main AC No. 4	1-65
De-Ice Htr Total Temp Probe 1	115-VAC	Fwd Main AC No. 1	1-66
De-Ice Htr Total Temp Probe 2	115-VAC	Fwd Main AC No. 4	1-65
Engine Anti-Ice Control 1	28-VDC	Main DC No. 1	1-68
Engine Anti-Ice Control 2	28-VDC	Main DC No. 2	1-67
Engine Anti-Ice Control 3	28-VDC	Main DC No. 2	1-67
Engine Anti-Ice Control 4	28-VDC	Main DC No. 1	1-68
Engine Anti-Ice Ind Lt 1	28-VDC	Main DC No. 1	1-68
Engine Anti-Ice Ind Lt 2	28-VDC	Main DC No. 2	1-67
Engine Anti-Ice Ind Lt 3	28-VDC	Main DC No. 2	1-67
Engine Anti-Ice Ind Lt 4	28-VDC	Main DC No. 1	1-68
Engine Anti-Ice Regulator Test	28-VDC	Main DC No. 1	1-68
Engine Anti-Ice Valve, Eng 1	115-VAC	Fwd Main AC No. 1	1-66

CIRCUIT BREAKER	POWER	BUS	FIGURE
Engine Anti-Ice Valve, Eng 2	115-VAC	Fwd Main AC No. 2	1-66
Engine Anti-Ice Valve, Eng 3	115-VAC	Fwd Main AC No. 3	1-65
Engine Anti-Ice Valve, Eng 4	115-VAC	Fwd Main AC No. 4	1-65
Ice Detector Control	28-VDC	Main DC No. 2	1-67
Nacelle Anti-Ice Valve, Eng 1	115-VAC	Fwd Main AC No. 1	1-66
Nacelle Anti-Ice Valve, Eng 2	115-VAC	Fwd Main AC No. 2	1-66
Nacelle Anti-Ice Valve, Eng 3	115-VAC	Fwd Main AC No. 3	1-65
Nacelle Anti-Ice Valve, Eng 4	115-VAC	Fwd Main AC No. 4	1-65
Angle-of-Attack Vanes De-Icing System.			
AOAT Lower Left	115-VAC	Avionics AC 1	1-69
AOAT Lower Left	115-VAC	Avionics AC 1	1-69
AOAT Lower Right	115-VAC	Avionics AC 1	1-69
AOAT Lower Right	115-VAC	Avionics AC 1	1-69
AOAT Upper Left	115-VAC	Avionics AC 2	1-69
AOAT Upper Left	115-VAC	Avionics AC 2	1-69
AOAT Upper Right	115-VAC	Avionics AC 2	1-69
AOAT Upper Right	115-VAC	Avionics AC 2	1-69
Pitot Heat System.			
Pilot Pitot & Angle-of-Attack Warn Lt.	28-VDC	Emergency DC	1-61
Pitot Coplt Cont & Plt Ind Lt & Total Temp	28-VDC	Main DC No. 1	1-68
Pitot Static HD Htr Lwr RH	115-VAC	Emergency AC	1-61
Pitot Static HD Htr Upper LH	115-VAC	Emergency AC	1-61
Pitot Static Htr Lower LH	115-VAC	Fwd Main AC No. 4	1-65
Pitot Static Htr Upper RH	115-VAC	Fwd Main AC No. 4	1-65
Pitot Static Htr Lower RH	115-VAC	Fwd Main AC No. 1	1-66
Pitot Static Htr Upper LH	115-VAC	Fwd Main AC No. 1	1-66
Windshield Ice and Fog Protection System.			
Copilot Side Wshld Heating	55-VAC		1-62
Pilot Side Wshld Heating	55-VAC		1-62
Pilot Wshld Heat	115-VAC	Fwd Main AC No. 1	1-66
Wshld Heat Control, Copilot	28-VDC	Main DC No. 2	1-67
Wshld Heat Control, Copilot Side	28-VDC	Main DC No. 1	1-68
Wshld Heat Control, Ctr	28-VDC	Main DC No. 2	1-67
Wshld Heat Control, Pilot	28-VDC	Main DC No. 1	1-68
Wshld Heat Control, Pilot Side	28-VDC	Main DC No. 2	1-67
Wshld Heat Copilot	115-VAC	Fwd Main AC No. 4	1-65
Wshld Heat Copilot, Side	115-VAC	Fwd Main AC No. 2	1-66
Wshld Heat Ctr	115-VAC	Fwd Main AC No. 4	1-65
Wshld Heat Pilot, Side	115-VAC	Fwd Main AC No. 2	1-66

CIRCUIT BREAKER	POWER	BUS	FIGURE
AUTOMATIC FLIGHT CONTROL SYSTEM.			
Autopilot.			
AFCS Control Panel	115-VAC	Avionics AC 1	1-69
AFCS Control Panel	115-VAC	Nav AC 2	1-69
Autopilot Lat	115-VAC	Avionics AC	1-69
Autopilot Lat	28-VDC	Avionics DC 1	1-69
Autopilot Lat	115-VAC	Nav AC 2	1-69
Autopilot Lat & Roll PACS	115-VAC	Avionics AC 2	1-69
Autopilot Pitch	115-VAC	Avionics AC	1-69
Autopilot Pitch	28-VDC	Avionics DC 1	1-69
Autopilot Pitch	115-VAC	Nav AC 2	1-69
Autopilot Pitch & PACS	115-VAC	Avionics AC 2	1-69
Automatic Throttle Subsystem.			
Auto Throt	115-VAC	Avionics AC 1	1-69
Auto Throt	28-VDC	Avionics DC 1	1-69
FLIGHT AUGMENTATION SYSTEM.			
Lat Aug 1	115-VAC	Avionics AC 1	1-69
Lat Aug 2	115-VAC	Avionics ISO AC	1-69
Pitch Aug 1	115-VAC	Avionics AC 1	1-69
Pitch Aug 2	115-VAC	Avionics ISO AC	1-69
Pitch Aug 3	115-VAC	Avionics AC 2	1-69
Yaw Aug 1	115-VAC	Avionics AC 1	1-69
Yaw Aug 2	115-VAC	Avionics ISO AC	1-69
Yaw Aug 3	115-VAC	Avionics AC 2	1-69
Go-Around Attitude Subsystem.			
GAAS Demod Ref	26-VAC	26-VAC NAV 2	1-69
GAAS Demod Ref	26-VAC	Emergency AC	1-61
Go-Around	28-VDC	Avionics DC 2	1-69
Go-Around	115-VAC	Avionics AC 2	1-69
AUXILIARY POWER UNITS.			
APU Control, LH	28-VDC	Battery	1-64
APU Control, RH	28-VDC	Battery	1-64
APU EGT LH	115-VAC	ISOL AC	1-64

CIRCUIT BREAKER	POWER	BUS	FIGURE
APU EGT RH	115-VAC	ISOL AC	1-64
APU Fire Det Cont, LH	28-VDC	ISOL DC	1-64
APU Fire Det Cont, RH	28-VDC	ISOL DC	1-64
APU Gen Fail Lt	28-VDC	Battery	1-64
APU Ind Lt, LH	28-VDC	Battery	1-64
APU Ind Lt, RH	28-VDC	Battery	1-64
Engine Fire Extinguisher, APU	28-VDC	Battery	1-64

AVIONICS EQUIPMENT COOLING SYSTEM.

Avionics Cooling Duct Overheat Ind Lt	28-VDC	Main DC No. 2	1-67
Avionics Cooling Fan 1	115-VAC	Fwd Main AC No. 2	1-62
Avionics Cooling Fan 2	115-VAC	Fwd Main AC No. 3	1-62
Avionics Cooling Fan 1 Cont	28-VDC	Main DC No. 1	1-68
Avionics Cooling Fan 2 Control	28-VDC	Main DC No. 2	1-67
FLT Engr Cooling Fan	115-VAC	Fwd Main AC No. 3	1-62

BLEED AIR SYSTEM.

Bleed Air Duct Overheat Detection System.

Cargo Floor Duct Ovht	28-VDC	ISOL DC	1-64
Cargo Floor Ovht	28-VDC	ISOL DC	1-64
Cargo Floor Ovht	115-VAC	ISOL AC	1-64
Wing & Pylon Overheat LH	28-VDC	ISOL DC	1-64
Wing & Pylon Overheat RH	28-VDC	ISOL DC	1-64
Wing & Pylon Overheat LH	115-VAC	ISOL AC	1-64
Wing & Pylon Overheat RH	115-VAC	ISOL AC	1-64

Engine Bleed Air System.

Bleed Air Inbd Ind Lt	28-VDC	Main DC No. 2	1-67
Bleed Air Outbd Ind Lt	28-VDC	Main DC No. 1	1-68
Bleed Air Valve (Eng 1, 2, 3, 4)	28-VDC	ISOL DC	1-64
Manf Bleed Air Pressure Indicator	26-VAC	AC Inst No. 1	1-66
Press Aug Valve (4, 1)	28-VDC	Main DC No. 1	1-68
Press Aug Valve (3, 2)	28-VDC	Main DC No. 2	1-67
Wing Isolation Valve LH	115-VAC	ISOL AC	1-64
Wing Isolation Valve RH	115-VAC	ISOL AC	1-64

CIRCUIT BREAKER	POWER	BUS	FIGURE
CARGO COMPARTMENT FLOOR HEAT.			
Aft Floor Heat Fan	115-VAC	Monitor AC No. 3	1-70
Ctr Floor Heat Fan	115-VAC	Monitor AC No. 2	1-70
Floor Heat Control, Aft	115-VAC	ISOL AC	1-64
Floor Heat Control, Fwd	115-VAC	ISOL AC	1-64
Fwd Floor Heat Fan	115-VAC	Monitor AC No. 2	1-70
CARGO DOOR AND RAMP SYSTEMS.			
Aft Cargo Door Control	28-VDC	Main DC No. 2	1-67
Aft Cargo Door Ind Lt	28-VDC	Main DC No. 2	1-67
Fwd Cargo Door Control	28-VDC	Main DC No. 1	1-68
Fwd Cargo Door Ind Lt	28-VDC	Main DC No. 1	1-68
Ramp Actuator Relief	115-VAC	Fwd Main AC No. 4	1-65
CARGO LOADING EQUIPMENT.			
Aft Cargo Winch & Service Outlet RH (3)	115-VAC	Monitor AC No. 3	1-70
Cargo Winch Selector	28-VDC	Main DC No. 2	1-67
Fwd Cargo Winch & Buffet/Lav Outlet (3)	115-VAC	Monitor AC No. 2	1-70
COMMUNICATION SYSTEMS.			
HF 1 (3)	115-VAC	Avionics AC 1	1-69
HF 2 (3)	115-VAC	Avionics AC 2	1-69
IFF	28-VDC	Emergency DC	1-61
IFF	115-VAC	Emergency AC	1-61
IFF Test	28-VDC	Avionics ISO DC	1-69
Interphone, Flt Sta	28-VDC	Avionics DC 2	1-69
Interphone Int Compt	28-VDC	Avionics DC 2	1-69
Interphone, Plt FE	28-VDC	Emergency DC	1-61
Interphone, Winch/Service	28-VDC	Avionics DC 2	1-69
Interphone, Service	28-VDC	Avionics DC 2	1-69
Public Address, Aft Cargo	28-VDC	Avionics DC 1	1-69
Public Address Aft Troop	28-VDC	Avionics DC 1	1-69
Public Address Fwd Cargo	28-VDC	Avionics DC 1	1-69
Public Address Relief Crew	28-VDC	Avionics DC 1	1-69
UHF 1	28-VDC	Avionics ISO DC	1-69
UHF 1 (3)	115-VAC	Avionics ISO AC	1-69
UHF 2	28-VDC	Avionics DC 2	1-69
UHF 2 (3)	115-VAC	Avionics AC 2	1-69
VHF Comm 1	28-VDC	Avionics ISO DC	1-69

CIRCUIT BREAKER	POWER	BUS	FIGURE
VHF Comm 2	28-VDC	Avionics DC 2	1-69
VHF Comm Ant Sw	28-VDC	Avionics DC 2	1-69
VHF/FM	28-VDC	Avionics DC 1	1-69
CRASH DATA POSITION INDICATOR-RECORDER (CDPIR).			
CDPIR	28-VDC	Avionics ISO DC	1-69
CDPIR (2)	115-VAC	Avionics ISO AC	1-69
CDPIR	26-VAC	Emergency AC	1-61
ELECTRICAL POWER SUPPLY SYSTEM.			
26-VAC Inst Trans	115-VAC	Emerg AC	1-61
26-VAC Inst Trans	115-VAC	Fwd Main AC No. 1	1-66
26-VAC Inst Trans	115-VAC	Fwd Main AC No. 2	1-66
26-VAC Inst Trans	115-VAC	Fwd Main AC No. 3	1-65
26-VAC Inst Trans	115-VAC	Fwd Main AC No. 4	1-65
26-VAC Iso Trans	115-VAC	Avionics Iso AC	1-69
26-VAC Nav 1 Trans	115-VAC	Nav AC No. 1	1-69
26-VAC Nav 2 Trans	115-VAC	Nav AC No. 2	1-69
APU Gen Cont (3)	115-VAC	Gen 4 C/B Pnl	1-70
APU Gen Fail Lt	28-VDC	Battery	1-64
APU Generator Cont (3)	28-VDC	APU and External AC Power C/B Pnl	1-71
APU Generator Volt & Freq (3)	28-VDC	APU and External AC Power C/B Pnl	1-71
Auto Parallel	115-VAC	Gen 1 C/B Pnl	1-70
Avionics AC Bus 1 (3)	115-VAC	Gen 1 C/B Pnl	1-70
Avionics AC Bus 2 (3)	115-VAC	Gen 4 C/B Pnl	1-70
Avionics Pwr Feeder	28-VDC	Isol DC Bus Pwr	1-63
Avionics Serv Outlet (3)	115-VAC	Fwd Main AC No. 1	1-66
Bat Bus Pwr Bus 1	28-VDC	Bat Pwr	1-63
Bat Bus Pwr Bus 2	28-VDC	Bat Pwr	1-63
Bat Bus Pwr Norm Bat	28-VDC	Bat Pwr	1-63
Bat Bus Pwr Stby Bat	28-VDC	Bat Pwr	1-63
Bus Off Ind Lt	28-VDC	Isol DC	1-64
Bus Off Warn	28-VDC	Bat Pwr	1-63
Bus Off Warn (3)	115-VAC	Avionics AC No. 1	1-69
Bus Off Warn (3)	115-VAC	Avionics AC No. 2	1-69
Bus Off Warn	28-VDC	Battery	1-61
Bus Off Warn	28-VDC	Emerg DC	1-61
Bus Off Warn	28-VDC	ISOL DC	1-64
Bus Off Warn	28-VDC	Main DC No. 1	1-68
Bus Off Warn	28-VDC	Main DC No. 2	1-67

CIRCUIT BREAKER	POWER	BUS	FIGURE
Bus Off Warn (3)	115-VAC	Emerg AC	1-61
Bus Off Warn (3)	115-VAC	ISOL AC	1-64
Bus Off Warn (3)	115-VAC	Aft Main AC No. 1	1-70
Bus Off Warn (3)	115-VAC	Aft Main AC No. 2	1-70
Bus Off Warn (3)	115-VAC	Aft Main AC No. 3	1-70
Bus Off Warn (3)	115-VAC	Aft Main AC No. 4	1-70
Bus Off Warn (3)	115-VAC	Fwd Main AC No. 1	1-66
Bus Off Warn (3)	115-VAC	Fwd Main AC No. 2	1-66
Bus Off Warn (3)	115-VAC	Fwd Main AC No. 3	1-65
Bus Off Warn (3)	115-VAC	Fwd Main AC No. 4	1-65
Bus Off Warn (3)	115-VAC	Monitor AC No. 2	1-70
Bus Off Warn (3)	115-VAC	Monitor AC No. 3	1-70
Bus Tie Cont 1	28-VDC	Battery	1-64
Bus Tie Cont 2	28-VDC	Battery	1-64
Bus Tie Cont 3	28-VDC	Battery	1-64
Bue Tie Cont 4	28-VDC	Battery	1-64
CSD Disc 1	28-VDC	Main DC No. 1	1-68
CSD Disc 2	28-VDC	Main DC No. 2	1-67
CSD Disc 3	28-VDC	Main DC No. 2	1-67
CSD Disc 4	28-VDC	Main DC No. 1	1-68
Emer AC & DC Bus Off Ind Lt	28-VDC	Battery	1-64
Emerg DC Pwr Feeder	28-VDC	Batt Pwr	1-63
Emerg DC Pwr Feeder	28-VDC	Isol DC	1-63
Emerg Gen Volt	28-VDC	Emerg DC	1-61
Emerg Gen Volt & Freq (3)	115-VAC	Emerg AC	1-61
Emerg Pwr Cont	28-VDC	Emerg DC	1-61
Emergency Generator AC Power, Phase A	115-VAC	Emerg Gen	1-73
Emergency Generator AC Power, Phase B	115-VAC	Emerg Gen	1-73
Emergency Generator AC Power, Phase C	115-VAC	Emerg Gen	1-73
Emergency Generator DC Power	28-VDC	Emerg Gen	1-73
External Power Cont (3)	28-VDC	APU and External AC Power C/B Pnl	1-71
External Power Volt & Freq (3)	28-VDC	APU and External AC Power C/B Pnl	1-71
Feeder 1, 2	28-VDC	Main DC 1 Pwr	1-63
Feeder 1, 2	28-VDC	Main DC 2 Pwr	1-63
Feeder Avionics Bus	28-VDC	Main DC 1 Pwr	1-63
Feeder Avionics Bus	28-VDC	Main DC 2 Pwr	1-63
Gen & CSD Fail Lt 1	28-VDC	Main DC No. 1	1-68
Gen & CSD Fail Lt 2	28-VDC	Main DC No. 2	1-67
Gen & CSD Fail Lt 3	28-VDC	Main DC No. 2	1-67

CIRCUIT BREAKER	POWER	BUS	FIGURE
Gen & CSD Fail Lt 4	28-VDC	Main DC No. 1	1-68
Gen Diff Prot Reset	28-VDC	Main DC No. 2	1-67
Gen 1 Control (3)	115-VAC	Gen 1 C/B Pnl	1-70
Gen 1 Volt & Freq (3)	115-VAC	Gen 1 C/B Pnl	1-70
Gen 2 Control (3)	115-VAC	Gen 2 C/B Pnl	1-70
Gen 2 Volt & Freq (3)	115-VAC	Gen 2 C/B Pnl	1-70
Gen 3 Control (3)	115-VAC	Gen 3 C/B Pnl	1-70
Gen 3 Volt & Freq (3)	115-VAC	Gen 3 C/B Pnl	1-70
Gen 4 Control (3)	115-VAC	Gen 4 C/B Pnl	1-70
Gen 4 Volt & Freq (3)	115-VAC	Gen 4 C/B Pnl	1-70
Inst Grd Sw	28-VDC	Avionics DC No. 1	1-69
Inst Grd Sw	28-VDC	Avionics DC No. 2	1-69
Inst Grd Sw	115-VAC	Avionics AC No. 1	1-69
Inst Ground Switch	115-VAC	Fwd Main AC No. 1	1-66
Inst Ground Switch	115-VAC	Fwd Main AC No. 2	1-66
Inst Ground Switch	115-VAC	Fwd Main AC No. 3	1-65
Inst Ground Switch	115-VAC	Fwd Main AC No. 4	1-65
Isolated AC Bus (3)	115-VAC	AC Gen C/B Pnl	1-70
Iso Bus Off Ind Lt	28-VDC	Emerg DC	1-61
Iso DC Bus Pwr Feeder 1	28-VDC	Isol DC Pwr	1-63
Iso DC Bus Pwr Feeder 2	28-VDC	Isol DC Pwr	1-63
Iso DC Bus Pwr Feeder 3	28-VDC	Isol DC Pwr	1-63
Iso DC Bus Pwr Feeder 4	28-VDC	Isol DC Pwr	1-63
Load 1 Cont	115-VAC	Gen 1 C/B Pnl	1-70
Load 2 Cont	115-VAC	Gen 2 C/B Pnl	1-70
Load 3 Cont	115-VAC	Gen 3 C/B Pnl	1-70
Load 4 Cont	115-VAC	Gen 4 C/B Pnl	1-70
Light Nav Ckt Bkr Pnl	115-VAC	Avionics AC No. 1	1-69
Main AC Bus 1 Aft (3)	115-VAC	Gen 1 C/B Pnl	1-70
Main AC Bus 2 Aft (3)	115-VAC	Gen 2 C/B Pnl	1-70
Main AC Bus 3 Aft (3)	115-VAC	Gen 3 C/B Pnl	1-70
Main AC Bus 4 Aft (3)	115-VAC	Gen 4 C/B Pnl	1-70
Main AC Bus 1 Fwd (3)	115-VAC	Gen 1 C/B Pnl	1-70
Main AC Bus 2 Fwd (3)	115-VAC	Gen 2 C/B Pnl	1-70
Main AC Bus 3 Fwd (3)	115-VAC	Gen 3 C/B Pnl	1-70
Main AC Bus 4 Fwd (3)	115-VAC	Gen 4 C/B Pnl	1-70
Monitor AC Bus 2 (6)	115-VAC	Gen 2 C/B Pnl	1-70
Monitor AC Bus 3 (6)	115-VAC	Gen 2 C/B Pnl	1-70
Monitor Bus Tie Cont 2	28-VDC	Battery	1-64
Monitor Bus Tie Cont 3	28-VDC	Battery	1-64
Nac 1 & 2 Service Outlet	115-VAC	Aft Main AC No. 2	1-70

CIRCUIT BREAKER	POWER	BUS	FIGURE
Nac 3 & 4 Service Outlet	115-VAC	Aft Main AC No. 3	1-70
Nav Bus 1	115-VAC	Avionics AC No. 1	1-69
Nav Bus 2	115-VAC	Avionics AC No. 1	1-69
Nav Bus 2	115-VAC	Avionics AC No. 2	1-69
Normal Battery Bat Pwr	28-VDC	Normal Batt	1-72
Normal Battery Volt Test & Ind Lt	28-VDC	Normal Batt	1-72
Power 1 Transfer (6)	115-VAC	Gen 1 & 2 C/B Pnls	1-70
Power 2 Transfer (6)	115-VAC	Gen 3 & 4 C/B Pnls	1-70
Radome Service Outlet	115-VAC	Fwd Main AC No. 4	1-65
Service Outlet LH	28-VDC	Main DC No. 1	1-68
Service Outlet RH	28-VDC	Main DC No. 2	1-67
Service Outlet LH (3)	115-VAC	Monitor AC No. 2	1-70
Standby Battery Bat Pwr	28-VDC	Stby Batt	1-72
Standby Battery Volt Test & Ind Lt	28-VDC	Stby Batt	1-72
Stby Bat Chg Pwr	28-VDC	Main DC 2 Pwr	1-72
Stby Bat Cont	28-VDC	Main DC 2 Pwr	1-72
Sync Bus Relay	28-VDC	Battery	1-64
Transformer Rectifier 1	115-VAC	Gen 1 C/B Pnl	1-70
Transformer Rectifier 2	115-VAC	Gen 4 C/B Pnl	1-70
TR-1 Volt	28-VDC	Main DC No. 1 Pwr	1-63
TR-2-Volt	28-VDC	Main DC No. 2 Pwr	1-63
EMAC.			
EMAC	28-VDC	Avionics DC No. 1	1-69
EMAC	115-VAC	Avionics AC No. 1	1-69
EMAC	26-VAC	26-VAC Nav 1	1-69
ENGINES.			
Engine Fire Extinguisher System.			
Eng Fire Exting 1	28-VDC	Batt	1-64
Eng Fire Exting 2	28-VDC	Batt	1-64
Eng Fire Exting 3	28-VDC	Batt	1-64
Eng Fire Exting 4	28-VDC	Batt	1-64
Eng 1 Fire Exting	28-VDC	Isol DC	1-64
Eng 2 Fire Exting	28-VDC	Isol DC	1-64
Eng 3 Fire Exting	28-VDC	Isol DC	1-64
Eng 4 Fire Exting	28-VDC	Isol DC	1-64
Fire Exting Btl Out Ind Lt	28-VDC	Main DC No. 1	1-68
Engine Fuel System.			
Fuel & Low Boost Press Ind Lt, Eng 1	28-VDC	Main DC No. 1	1-68
Fuel & Low Boost Press Ind Lt, Eng 2	28-VDC	Main DC No. 2	1-67
Fuel & Low Boost Press Ind Lt, Eng 3	28-VDC	Main DC No. 2	1-67

CIRCUIT BREAKER	POWER	BUS	FIGURE
Fuel & Low Boost Press Ind Lt, Eng 4	28-VDC	Main DC No. 1	1-68
Fuel Filter ΔP Ampl, Eng 1	115-VAC	Fwd Main AC No. 1	1-66
Fuel Filter ΔP Ampl, Eng 2	115-VAC	Fwd Main AC No. 2	1-66
Fuel Filter ΔP Ampl, Eng 3	115-VAC	Fwd Main AC No. 3	1-65
Fuel Filter ΔP Ampl, Eng 4	115-VAC	Fwd Main AC No. 4	1-65
Fuel Heater, Eng 1	115-VAC	Fwd Main AC No. 1	1-66
Fuel Heater, Eng 2	115-VAC	Fwd Main AC No. 2	1-66
Fuel Heater, Eng 3	115-VAC	Fwd Main AC No. 3	1-65
Fuel Heater, Eng 4	115-VAC	Fwd Main AC No. 4	1-65
Engine Ignition System.			
Cont Ignition, Eng 1	115-VAC	Fwd Main AC No. 1	1-66
Cont Ignition, Eng 2	115-VAC	Fwd Main AC No. 2	1-66
Cont Ignition, Eng 3	115-VAC	Fwd Main AC No. 3	1-65
Cont Ignition, Eng 4	115-VAC	Fwd Main AC No. 4	1-65
Eng Start Ignition (4)	115-VAC	ISOL AC	1-64
Engine Instruments.			
Eng & CSD Oil Temp Ind 1	28-VDC	Main DC No. 1	1-68
Eng & CSD Oil Temp Ind 2	28-VDC	Main DC No. 2	1-67
Eng & CSD Oil Temp Ind 3	28-VDC	Main DC No. 2	1-67
Eng & CSD Oil Temp Ind 4	28-VDC	Main DC No. 1	1-68
Eng 1 Oil Pressure Indicator	26-VAC	26V AC Instrument Bus 1 Phase B	1-66
Eng 2 Oil Pressure Indicator	26-VAC	26V AC Instrument Bus 2 Phase B	1-66
Eng 3 Oil Pressure Indicator	26-VAC	26V AC Instrument Bus 3 Phase B	1-65
Eng 4 Oil Pressure Indicator	26-VAC	26V AC Instrument Bus 4 Phase B	1-65
EPR & N_2 RPM IND (4)	115-VAC	ISOL AC	1-64
Fuel Flow, TIT, & N_1 RPM, Eng 1 Ind	115-VAC	Fwd Main AC No. 1	1-66
Fuel Flow, TIT, & N_1 RPM, Eng 2 Ind	115-VAC	Fwd Main AC No. 2	1-66
Fuel Flow, TIT, & N_1 RPM, Eng 3 Ind	115-VAC	Fwd Main AC No. 3	1-65
Fuel Flow, TIT, & N_1 RPM, Eng 4 Ind	115-VAC	Fwd Main AC No. 4	1-65
Oil Filter ΔP Ampl, Eng 1	115-VAC	Fwd Main AC No. 1	1-66
Oil Filter ΔP Ampl, Eng 2	115-VAC	Fwd Main AC No. 2	1-66
Oil Filter ΔP Ampl, Eng 3	115-VAC	Fwd Main AC No. 3	1-65
Oil Filter ΔP Ampl, Eng 4	115-VAC	Fwd Main AC No. 4	1-65
Oil Low Press & Filter ΔP Ind Lt, Eng 1	28-VDC	Main DC No. 1	1-68
Oil Low Press & Filter ΔP Ind Lt, Eng 2	28-VDC	Main DC No. 2	1-67
Oil Low Press & Filter ΔP Ind Lt, Eng 3	28-VDC	Main DC No. 2	1-67
Oil Low Press & Filter ΔP Ind Lt, Eng 4	28-VDC	Main DC No. 1	1-68

CIRCUIT BREAKER	POWER	BUS	FIGURE
Oil Qty, Eng 1 Ind	115-VAC	Fwd Main AC No. 1	1-66
Oil Qty, Eng 2 Ind	115-VAC	Fwd Main AC No. 2	1-66
Oil Qty, Eng 3 Ind	115-VAC	Fwd Main AC No. 3	1-65
Oil Qty, Eng 4 Ind	115-VAC	Fwd Main AC No. 4	1-65
Engine Overheat and Fire Detection System.			
Fire Det Test & Audible Alarm	28-VDC	ISOL DC	1-64
Fire & Ovht Control Eng 1	28-VDC	Main DC No. 1	1-68
Fire & Ovht Control Eng 2	28-VDC	Main DC No. 2	1-67
Fire & Ovht Detect Eng 3	28-VDC	Main DC No. 2	1-67
Fire & Ovht Det Eng 4	28-VDC	Main DC No. 1	1-68
Engine Starter System.			
Emergency Shutdown Relay (4)	28-VDC	ISOL DC	1-64
Eng Start (4)	28-VDC	ISOL DC	1-64
Engine Starter Valve Ind Lt	28-VDC	ISOL DC	1-64
Engine Thrust Reverser System.			
Thrust Reverser Lockout Actuator 1 & 4	28-VDC	Main DC No. 1	1-68
Thrust Reverser Lockout Actuator 2	28-VDC	Main DC No. 2	1-67
Thrust Reverser Lockout Actuator 3	28-VDC	Main DC No. 2	1-67
Thrust Reverser Pos Ind Lt (4)	28-VDC	ISOL DC	1-64
Thrust Reverser Press Emerg Retract	28-VDC	ISOL DC	1-64
Thrust Reverser Pressure 1	28-VDC	Main DC No. 1	1-68
Thrust Reverser Pressure 2	28-VDC	Main DC No. 2	1-67
Thrust Reverser Pressure 3	28-VDC	Main DC No. 2	1-67
Thrust Reverser Pressure 4	28-VDC	Main DC No. 1	1-68
Thrust Reverser Pressure Ind Lt 1	28-VDC	Main DC No. 1	1-68
Thrust Reverser Pressure Ind Lt 2	28-VDC	Main DC No. 2	1-67
Thrust Reverser Pressure Ind Lt 3	28-VDC	Main DC No. 2	1-67
Thrust Reverser Pressure Ind Lt 4	28-VDC	Main DC No. 1	1-68
FLIGHT CONTROL SYSTEM.			
Aileron.			
Aileron LH Sys 2 SOV	115-VAC	Fwd Main AC No. 2	1-66
Aileron LH Trim Actuator	115-VAC	Fwd Main AC No. 2	1-66
Aileron RH Sys 2 SOV	115-VAC	Fwd Main AC No. 3	1-65
Aileron RH Trim Actuator	115-VAC	Fwd Main AC No. 3	1-65
Aileron Sys 1 & 4 Ind Lt	28-VDC	Main DC No. 1	1-68
Aileron Sys 2 Ind Lt	28-VDC	Main DC No. 2	1-67

CIRCUIT BREAKER	POWER	BUS	FIGURE
Aileron Trim Pos Ind	115-VAC	Fwd Main AC No. 3	1-65
Autopilot Lat & Roll PACS	115-VAC	Avionics AC No. 2	1-69
Autopilot Pitch & PACS	115-VAC	Avionics AC No. 2	1-69
LH Aileron Sys 1 SOV	115-VAC	Fwd Main AC No. 1	1-66
PACS Roll	28-VDC	Avionics DC No. 2	1-69
RH Aileron Sys 4 SOV	115-VAC	Fwd Main AC No. 4	1-65
Elevator.			
Elevator Feel Mal Ind	28-VDC	ISOL DC	1-64
Elevator Ind Lt Feel Sys 1	28-VDC	Main DC No. 1	1-68
Elevator Ind Lt Feel Sys 4	28-VDC	Main DC No. 2	1-67
Elevator Ind Lt Inbd Sys 2	28-VDC	Main DC No. 1	1-68
Elevator Ind Lt Inbd Sys 3	28-VDC	Main DC No. 2	1-67
Elevator Ind Lt Outbd Sys 1	28-VDC	Main DC No. 2	1-67
Elevator Ind Lt Outbd Sys 2	28-VDC	Main DC No. 2	1-67
Elevator Ind Lt Outbd Sys 3	28-VDC	Main DC No. 1	1-68
Elevator SOV Feel Sys 1	115-VAC	Fwd Main AC No. 1	1-66
Elevator SOV Feel Sys 4	115-VAC	Fwd Main AC No. 4	1-65
Elevator SOV Inbd LH Sys 2	115-VAC	Fwd Main AC No. 2	1-66
Elevator SOV Inbd LH Sys 3	115-VAC	Fwd Main AC No. 4	1-65
Elevator SOV Inbd RH Sys 2	115-VAC	Fwd Main AC No. 3	1-65
Elevator SOV Inbd RH Sys 3	115-VAC	Fwd Main AC No. 4	1-65
Elevator SOV Outbd Sys 1	115-VAC	Fwd Main AC No. 2	1-66
Elevator SOV Outbd Sys 2	115-VAC	Fwd Main AC No. 3	1-65
Elevator SOV Outbd Sys 3	115-VAC	Fwd Main AC No. 1	1-66
Emerg Pitch Trim	28-VDC	Main DC No. 2	1-67
Flight Spoiler LH Ratio Shift	115-VAC	Fwd Main AC No. 2	1-66
Flight Spoiler RH Ratio Shift	115-VAC	Fwd Main AC No. 3	1-65
Flight Spoiler Sys 1 SOV	115-VAC	Aft Main AC No. 1	1-70
Flight Spoiler Sys 2 SOV	115-VAC	Aft Main AC No. 2	1-70
Flight Spoiler Sys 3 SOV	115-VAC	Aft Main AC No. 3	1-70
Flight Spoiler Sys 4 SOV	115-VAC	Aft Main AC No. 4	1-70
Horiz Stab Trim Pos Ind	115-VAC	Fwd Main AC No. 4	1-65
PACS Pitch	28-VDC	Avionics DC No. 2	1-69
Pitch Trim Control	28-VDC	Isol DC	1-64
Pri Pitch Trim	28-VDC	Main DC No. 1	1-68
Rudder.			
Limit Cont 1	28-VDC	Main DC No. 2	1-67
Lower Rudder Sys 2 SOV	115-VAC	Fwd Main AC No. 4	1-65
Lower Rudder Sys 3 SOV	115-VAC	Fwd Main AC No. 3	1-65
Mach Trim Comp	28-VDC	Avionics DC No. 1	1-69

CIRCUIT BREAKER	POWER	BUS	FIGURE
Mach Trim Comp	115-VAC	Avionics AC No. 1	1-69
Rudder Limit	115-VAC	ISOL AC	1-64
Rudder Limit Cont 2	28-VDC	Main DC No. 1	1-68
Rudder Lower Sys 2 Ind Lt	28-VDC	Main DC No. 1	1-68
Rudder Lower Sys 3 Ind Lt	28-VDC	Main DC No. 2	1-67
Rudder Trim Pos Ind	115-VAC	Fwd Main AC No. 3	1-65
Rudder Trim Actuator	115-VAC	Fwd Main AC No. 2	1-66
Rudder Upper Sys 1 Ind Lt	28-VDC	Main DC No. 2	1-67
Rudder Upper Sys 3 Ind Lt	28-VDC	Main DC No. 1	1-68
Upper Rudder Sys 1 SOV	115-VAC	Fwd Main AC No. 2	1-66
Upper Rudder Sys 3 SOV	115-VAC	Fwd Main AC No. 1	1-66
Spoilers, Flight and Ground.			
Flight Spoiler LH Ratio Shift Ind Lt	28-VDC	Main DC No. 1	1-68
Flight Spoiler RH Ratio Shift Ind Lt	28-VDC	Main DC No. 2	1-67
Flight Spoiler Sys A LH Ind Lt	28-VDC	Main DC No. 2	1-67
Flight Spoiler Sys A RH Ind Lt	28-VDC	Main DC No. 1	1-68
Flight Spoiler Sys B LH Ind Lt	28-VDC	Main DC No. 1	1-68
Flight Spoiler Sys B RH Ind Lt	28-VDC	Main DC No. 2	1-67
Ground Spoiler Ratio Shift Cont	28-VDC	Main DC No. 1	1-68
Ground Spoiler Sys A LH Ind Lt	28-VDC	Main DC No. 2	1-67
Ground Spoiler Sys A RH Ind Lt	28-VDC	Main DC No. 1	1-68
Ground Spoiler Sys No. 1 Shutoff Valve	115-VAC	Aft Main AC No. 1	1-70
Ground Spoiler Sys No. 4 Shutoff Valve	115-VAC	Aft Main AC No. 4	1-70
Ground Spoiler Lockout	28-VDC	Isol DC	1-64
Ground Spoiler Position Indicator	28-VDC	Main DC No. 2	1-67
Ground Spoiler Sys B LH Ind Lt	28-VDC	Main DC No. 1	1-68
Ground Spoiler Sys B RH Ind Lt	28-VDC	Main DC No. 2	1-67
Spoiler Servo Sys A SOV	28-VDC	Main DC No. 1	1-68
Spoiler Servo Sys B SOV	28-VDC	Main DC No. 2	1-67
FUEL SUPPLY SYSTEM.			
Air Refuel Control	28-VDC	ISOL DC	1-64
Air Refuel Door Cont & Emerg Latch	28-VDC	ISOL DC	1-64
Air Refuel Drain	115-VAC	Fwd Main AC No. 1	1-66
Auto Refuel Control, Aux	28-VDC	ISOL DC	1-64
Auto Refuel Control, Ext Range	28-VDC	ISOL DC	1-64
Auto Refuel Control, Main	28-VDC	ISOL DC	1-64
Fuel Crossfeed Valve, LH	115-VAC	ISOL AC	1-64
Fuel Crossfeed Valve, RH	115-VAC	ISOL AC	1-64
Fuel Isolation Valve (4)	115-VAC	ISOL AC	1-64

CIRCUIT BREAKER	POWER	BUS	FIGURE
Fuel Manifold Drain Valve	115-VAC	Fwd Main AC No. 1	1-66
Fuel Mismanage Ind Lts	28-VDC	Main DC No. 1	1-68
Fuel Pressure Ind, LH	26-VAC	AC Inst No. 2	1-66
Fuel Pressure Ind, RH	26-VAC	AC Inst No. 3	1-65
Fuel Quantity Ind			
Aux 1	115-VAC	Fwd Main AC No. 4	1-65
Aux 2	115-VAC	Fwd Main AC No. 3	1-65
Aux 3	115-VAC	Fwd Main AC No. 2	1-66
Aux 4	115-VAC	Fwd Main AC No. 1	1-66
Ext Range 1	115-VAC	Fwd Main AC No. 4	1-65
Ext Range 2	115-VAC	Fwd Main AC No. 3	1-65
Ext Range 3	115-VAC	Fwd Main AC No. 2	1-66
Ext Range 4	115-VAC	Fwd Main AC No. 1	1-66
Main 1	115-VAC	Fwd Main AC No. 4	1-65
Main 2	115-VAC	Fwd Main AC No. 3	1-65
Main 3	115-VAC	Fwd Main AC No. 2	1-66
Main 4	115-VAC	Fwd Main AC No. 1	1-66
Total	115-VAC	Fwd Main AC No. 2	1-66
Fuel Separation Valve, Center	28-VDC	Battery	1-64
Fuel Separation Valve, LH	28-VDC	Battery	1-64
Fuel Separation Valve, RH	28-VDC	Battery	1-64
Fuel Shutoff (4)	28-VDC	ISOL DC	1-64
Fuel Temp Ind	28-VDC	Main DC No. 1	1-68
Grd Refuel ISO Valve LH	28-VDC	Battery	1-64
Grd Refuel ISO Valve RH	28-VDC	Battery	1-64
LH Fuel Valve Aerial ISO	115-VAC	ISOL AC	1-64
RH Fuel Valve Aerial ISO	115-VAC	ISOL AC	1-64
Inboard Fuel Boost Pumps.			
Aux 1	115-VAC	Aft Main AC No. 1	1-70
Aux 2	115-VAC	Aft Main AC No. 2	1-70
Aux 3	115-VAC	Aft Main AC No. 3	1-70
Aux 4	115-VAC	Aft Main AC No. 4	1-70
Ext Range 1	115-VAC	Aft Main AC No. 1	1-70
Ext Range 2	115-VAC	Aft Main AC No. 2	1-70
Ext Range 3	115-VAC	Aft Main AC No. 3	1-70
Ext Range 4	115-VAC	Aft Main AC No. 4	1-70
Main 1	115-VAC	Aft Main AC No. 1	1-70

CIRCUIT BREAKER	POWER	BUS	FIGURE
Main 2	115-VAC	Aft Main AC No. 2	1-70
Main 3	115-VAC	Aft Main AC No. 3	1-70
Main 4	115-VAC	Aft Main AC No. 4	1-70
LH Fuel Valve Jettison	115-VAC	ISOL AC	1-64
RH Fuel Valve Jettison	115-VAC	ISOL AC	1-64
Outboard Fuel Boost Pump.			
Aux 1	115-VAC	Aft Main AC No. 4	1-70
Aux 2	115-VAC	Aft Main AC No. 3	1-70
Aux 3	115-VAC	Aft Main AC No. 2	1-70
Aux 4	115-VAC	Aft Main AC No. 1	1-70
Ext Range 1	115-VAC	Aft Main AC No. 4	1-70
Ext Range 2	115-VAC	Aft Main AC No. 3	1-70
Ext Range 3	115-VAC	Aft Main AC No. 2	1-70
Ext Range 4	115-VAC	Aft Main AC No. 1	1-70
Main 1	115-VAC	Aft Main AC No. 4	1-70

CIRCUIT BREAKER	POWER	BUS	FIGURE
Main 2	115-VAC	Aft Main AC No. 3	1-70
Main 3	115-VAC	Aft Main AC No. 2	1-70
Main 4	115-VAC	Aft Main AC No. 1	1-70
Pri Fuel Level Valve			
Aux	115-VAC	Fwd Main AC No. 2	1-66
Ext Range	115-VAC	Fwd Main AC No. 2	1-66
Main	115-VAC	Fwd Main AC No. 2	1-66
Refuel Manifold Drain LH	115-VAC	Fwd Main AC No. 2	1-66
Refuel Manifold Drain RH	115-VAC	Fwd Main AC No. 3	1-65
Sec Fuel Level Valve			
Aux	115-VAC	Fwd Main AC No. 3	1-65
Ext Range	115-VAC	Fwd Main AC No. 3	1-65
Main	115-VAC	Fwd Main AC No. 3	1-65
Tank 1 Sump Low Level Warn	115-VAC	Fwd Main AC No. 1	1-66
Tank 4 Sump Low Level Warn	115-VAC	Fwd Main AC No. 4	1-65
Fuel Tank Inerting and Fire Suppression System.			
FE1301	28-VDC	Isol DC	1-64
FPS Fire Suppression	28-VDC	Normal Battery	1-72
FSS Feeder	28-VDC	Isol DC Bus Pwr	1-64
Nitrogen	28-VDC	Isol DC	1-64
Nitrogen Inerting	28-VDC	Isol DC	1-64
HYDRAULIC POWER SUPPLY SYSTEM.			
Engine 1 Hyd Pump Control	28-VDC	Isolated DC	1-64
Engine 2 Hyd Pump Control	28-VDC	Isolated DC	1-64
Engine 3 Hyd Pump Control	28-VDC	Isolated DC	1-64
Engine 4 Hyd Pump Control	28-VDC	Isolated DC	1-64
Hyd ATM Sys 1, Cont & Ind Lts	28-VDC	Battery	1-64
Hyd ATM Sys 1, Pneu & Hyd SOV	28-VDC	Battery	1-64

CIRCUIT BREAKER	POWER	BUS	FIGURE
Hyd ATM Sys 1, Suction SOV	28-VDC	Battery	1-64
Hyd ATM Sys 4, Cont & Ind Lts	28-VDC	Main DC No. 2	1-67
Hyd ATM Sys 4, Pneu & Hyd SOV	28-VDC	Main DC No. 2	1-67
Hyd ATM Sys 4, RH APU Iso	28-VDC	Main DC No. 2	1-67
Hyd ATM Sys Priority	28-VDC	Main DC No. 2	1-67
Hyd ATM Sys 4, Suct SOV	28-VDC	Battery	1-64
Hydraulic Pump Supply Shutoff, Eng 1	28-VDC	Isolated DC	1-64
Hydraulic Pump Supply Shutoff, Eng 2	28-VDC	Isolated DC	1-64
Hydraulic Pump Supply Shutoff, Eng 3	28-VDC	Isolated DC	1-64
Hydraulic Pump Supply Shutoff, Eng 4	28-VDC	Isolated DC	1-64
LH APU Iso	28-VDC	Isolated DC	1-64
Hydraulic Pump Ind Lt.			
Hyd Level Ind, Sys 1	28-VDC	Main DC No. 1	1-68
Hyd Level Ind, Sys 2	28-VDC	Main DC No. 2	1-67
Hyd Level Ind, Sys 3	28-VDC	Main DC No. 2	1-67
Hyd Level Ind, Sys 4	28-VDC	Main DC No. 1	1-68
Hyd Pwr Transfer Sys 1 & 2	28-VDC	Battery	1-64
Hyd Pwr Transfer Sys 2 & 3	28-VDC	Main DC No. 1	1-68
Hyd Pwr Transfer Sys 3 & 4	28-VDC	Main DC No. 2	1-67
Hyd Sys 1 Suction Boost Pump	115-VAC	Aft Main AC No. 1	1-70
Hyd Sys 4 Suction Boost Pump	115-VAC	Aft Main AC No. 4	1-70
Pressure Indicator Hyd Sys 1	26-VAC	26VAC Instrument 1	1-66
Pressure Indicator Hyd Sys 2	26-VAC	26VAC Instrument 2	1-66
Pressure Indicator Hyd Sys 3	26-VAC	26VAC Instrument 3	1-65
Pressure Indicator Hyd Sys 4	26-VAC	26VAC Instrument 4	1-65
Ram Air Turbine Auto Cont	28-VDC	Battery	1-64
Ram Air Turbine Manual Cont & Ind Lt	28-VDC	Battery	1-64
Sys 1 Boost	28-VDC	Main DC No. 1	1-68
Sys 1 Bottom	28-VDC	Main DC No. 1	1-68
Sys 1 Top	28-VDC	Main DC No. 1	1-68
Sys 2 Boost	28-VDC	Main DC No. 2	1-67
Sys 2 Bottom	28-VDC	Main DC No. 2	1-67
Sys 2 Top	28-VDC	Main DC No. 2	1-67
Sys 3 Boost	28-VDC	Main DC No. 2	1-67
Sys 3 Bottom	28-VDC	Main DC No. 2	1-67
Sys 3 Top	28-VDC	Main DC No. 2	1-67
Sys 4 Boost	28-VDC	Main DC No. 1	1-68
Sys 4 Bottom	28-VDC	Main DC No. 1	1-68
Sys 4 Top	28-VDC	Main DC No. 1	1-68

CIRCUIT BREAKER	POWER	BUS	FIGURE
INSTRUMENTS.			
Flt Engr Total Temp Ind	115-VAC	Fwd Main AC No. 1	1-66
TAS Ind	26-VAC	26-VAC NAV 2	1-69
Vert Vel Ind	115-VAC	Avionics AC 1	1-69
INTEGRAL WEIGHT AND BALANCE SYSTEM (IWBS).			
IWBS Computer	115-VAC	Aft Main AC No. 3	1-70
INTEGRATED FLIGHT INSTRUMENT SYSTEM (IFIS).			
ADI 1	115-VAC	Emergency AC	1-61
CADC No. 1	115-VAC	Emergency AC	1-61
CADC 2	115-VAC	Nav AC 2	1-69
CADC/VSFI Test, Copilot	28-VDC	Avionics DC 2	1-69
CADC/VSFI Test, Pilot	28-VDC	Avionics DC 2	1-69
Copilot HSI, Az Brg	115-VAC	Nav AC.2	1-69
Copilot HSI, Hdg Course	115-VAC	Nav AC 2	1-69
Copilot VSFI Airspeed	115-VAC	Nav AC 2	1-69
Copilot VSFI Alt	115-VAC	Nac AC 2	1-69
Flt Dir Cmptr 1	115-VAC	Avionics Iso AC	1-69
Flt Dir Cmptr 1	28-VDC	Avionics Iso DC	1-69
Flt Dir Cmptr 2	28-VDC	Avionics DC 2	1-69
Flt Dir Cmptr 2/ADI 2	115-VAC	Nav AC 2	1-69
HSI Bias	26-VAC	26-VAC ISO	1-69
HSI Range, Pilot	26-VAC	26-VAC ISO	1-69
HSI 1 Range, Copilot	26-VAC	26-VAC Nav 2	1-69
HSI 2 Bias	26-VAC	26-VAC Nav 2	1-69
Nav Sel Copilot	28-VDC	Avionics DC 2	1-69
Nav Sel Pilot	28-VDC	Avionics ISO DC	1-69
PCI 1	115-VAC	Nav AC 1	1-69
PCI 2	115-VAC	Nav AC 2	1-69
Pilot - HSI Az Brg	115-VAC	Avionics ISO AC	1-69
Pilot - HSI Hdg Course	115-VAC	Avionics ISO AC	1-69
Pilot VSFI Airspeed	115-VAC	Emergency AC	1-61
Pilot VSFI Alt	115-VAC	Emergency AC	1-61
Rate-of-Turn Sensor 2	115-VAC	Avionics AC 2	1-69
Rate-of-Turn Xmtr 1	115-VAC	Emergency AC	1-61

CIRCUIT BREAKER	POWER	BUS	FIGURE
LANDING GEAR SYSTEM.			
Brake System.			
Anti-Skid Alt Cont	28-VDC	Isolated DC	1-64
Anti-Skid Failure & Emerg Hyd Ind Lt	28-VDC	Isolated DC	1-64
Anti-Skid Normal Control	28-VDC	Main DC No. 1	1-68
Anti-Skid Test	26-VAC	AC Inst No. 1	1-66
Emer Brake Valve	28-VDC	Isolated DC	1-64
MLG Anti-Rotation	28-VDC	Main DC No. 1	1-68
Pressure Indicator, Alt Hyd Brake	26-VAC	AC Inst No. 4	1-65
Pressure Indicator Norm Hyd Brake	26-VAC	AC Inst No. 1	1-66
Crosswind Steering System.			
Emerg NLG Steering	28-VDC	Main DC No. 2	1-67
Emerg X-wind Pos	28-VDC	Main DC No. 2	1-67
MLG X-wind Pos Ind LH	115-VAC	Fwd Main AC No. 1	1-66
MLG X-wind Pos Ind RH	115-VAC	Fwd Main AC No. 1	1-66
X-wind Comptr Pwr	115-VAC	Fwd Main AC No. 3	1-65
X-wind Computer	28-VDC	Main DC No. 2	1-67
X-wind Mon LVDT Pwr	115-VAC	Fwd Main AC No. 3	1-65
X-wind Inop Ind Lt	28-VDC	Isolated DC	1-64
X-wind NLG Pos Ind	115-VAC	Fwd Main AC No. 3	1-65
X-wind Shutoff Valve Cont	28-VDC	Main DC No. 2	1-67
Inflight Tire Deflation System.			
Tire Deflation	28-VDC	Main DC No. 2	1-67
Landing Gear Kneeling System.			
Kneel Ind Lt	28-VDC	Main DC No. 1	1-68
Kneel Pad Actuator	115-VAC	Fwd Main AC No. 1	1-66
Kneel Press. Regulator	28-VDC	Main DC No. 1	1-68
MLG Aft DC Bus	28-VDC	Main DC No. 2	1-67
MLG DC Bus, MLG Kneel Brake	28-VDC	Main DC No. 2	1-70
MLG DC Bus, MLG Kneel Control	28-VDC	Main DC No. 2	1-70
MLG Kneel	28-VDC	Main DC No. 2	1-67
MLG Unkneel Ind Lt	28-VDC	Isolated DC	1-64
Pneu Isolation Valve	115-VAC	Aft Main AC No. 1	1-70

CIRCUIT BREAKER	POWER	BUS	FIGURE
Main and Nose Landing Gear.			
Emerg LG Sw On Ind Lt	28-VDC	Main DC No. 1	1-68
Landing Gear Pos Ind	28-VDC	Isolated DC	1-64
Landing Gear Warn Horn	28-VDC	Isolated DC	1-64
Landing Gear Warn Lt	28-VDC	Isolated DC	1-64
LH Aft MLG Emerg Extend	115-VAC	Aft Main AC No. 2, or	1-70
		Aft Main AC No. 3	1-70
LH Cont Module Aft MLG	115-VAC	Aft Main AC No. 2	1-70
LH Cont Module Fwd MLG	115-VAC	Aft Main AC No. 2	1-70
LH Fwd MLG Emerg Extend	115-VAC	Aft Main AC No. 1	1-70
MLG Control, Aft LH	28-VDC	Main DC No. 1	1-68
MLG Control, Aft RH	28-VDC	Main DC No. 1	1-68
MLG Control, Fwd LH	28-VDC	Main DC No. 1	1-68
MLG Control, Fwd RH	28-VDC	Main DC No. 1	1-68
Main DC Bus, MLG Emergency Extend			
Aft LH	28-VDC	Main DC No. 2	1-70
Aft RH	28-VDC	Main DC No. 2	1-70
Fwd LH	28-VDC	Main DC No. 2	1-70
Fwd RH	28-VDC	Main DC No. 2	1-70
MLG Emergency Extend, Aft LH	28-VDC	Main DC No. 2	1-67
MLG Emergency Extend, Aft RH	28-VDC	Main DC No. 2	1-67
MLG Emergency Extend, Fwd LH	28-VDC	Main DC No. 2	1-67
MLG Emergency Extend, Fwd RH	28-VDC	Main DC No. 2	1-67
NLG Control	28-VDC	Main DC No. 1	1-68
NLG Door Emerg Open - LH	115-VAC	Fwd Main AC No. 2	1-62
NLG Door Emerg Open - RH	115-VAC	Fwd Main AC No. 2	1-62
NLG Emerg Extend	28-VDC	Main DC No. 1	1-68
		Main DC No. 2	1-67
NLG Emerg Extend	115-VAC	Fwd Main AC No. 2	1-62
RH Aft MLG Emerg Extend	115-VAC	Aft Main AC No. 4	1-70
RH Fwd MLG Emerg Extend	115-VAC	Aft Main AC No. 2, or	1-70
		Aft Main AC No. 3	1-70
Spin Up 1	28-VDC	Isolated DC	1-64
Spin Up 2	28-VDC	Isolated DC	1-64
Spin Up Test	28-VDC	Isolated DC	1-64
Touchdown 1	28-VDC	Isolated DC	1-64
Touchdown 2	28-VDC	Isolated DC	1-64
Spinup Test	26-VAC	AC Instrument No. 1	1-66

CIRCUIT BREAKER	POWER	BUS	FIGURE
LIGHTING SYSTEM.			
28V AC Lighting Envir Compt & Seat Belt	28-VAC	Aft Main AC No. 3	1-70
Aft Cargo Ovhd Gr 2	115-VAC	Aft Main AC No. 2	1-70
Aft Cargo Side Gr 1	115-VAC	Aft Main AC No. 1	1-70
All Cargo Light Control	28-VDC	Main DC No. 2	1-67
Anti-Collision Emp Light	115-VAC	Fwd Main AC No. 3	1-65
Anti-Collision Lower Light	115-VAC	Fwd Main AC No. 2	1-66
Anti-Collision Upper Light	115-VAC	Fwd Main AC No. 3	1-65
Avionics Service	26-VAC	26-VAC Lighting	1-62
Bunk Dome	26-VAC	26-VAC Lighting	1-62
Bunk Reading	26-VAC	26-VAC Lighting	1-62
Cargo Side Gr 2 Light	115-VAC	Aft Main AC No. 2	1-70
Center Console Light	115-VAC	Fwd Main AC No. 2	1-66
Copilot Flood Light	115-VAC	Fwd Main AC No. 2	1-66
Copilot Inst Main Pnl Light	115-VAC	Fwd Main AC No. 3	1-65
Copilot Side Console Light	115-VAC	Fwd Main AC No. 2	1-66
Emerg Exit Arm Light	28-VDC	Main DC No. 1	1-68
Emerg Exit Light Disarm	28-VDC	Battery Bus	1-64
Flight Eng Inst Light	115-VAC	Fwd Main AC No. 3	1-65
Flt Eng Flood & Work Table Light	115-VAC	Fwd Main AC No. 2	1-66
Flt Eng Pnl Lower Light	115-VAC	Fwd Main AC No. 3	1-65
Flt Eng Pnl Upper Light	115-VAC	Fwd Main AC No. 3	1-65
Flt Sta Dome Light	115-VAC	Fwd Main AC No. 1	1-66
Fwd Cargo Ovhd Gr 2 Light	115-VAC	Aft Main AC No. 2	1-70
Fwd Cargo Side Gr 1 Light	115-VAC	Aft Main AC No. 1	1-70
Fuselage Top & Bottom Light	115-VAC	Fwd Main AC No. 2	1-66
Inflight Refuel Light	115-VAC	Fwd Main AC No. 2	1-66
Landing Control, LH Light	28-VDC	Main DC No. 1	1-68
Landing Control, RH Light	28-VDC	Main DC No. 1	1-68
LE Inspect Light	115-VAC	Aft Main AC No. 4	1-70
LH Aft Curb Light	115-VAC	Aft Main AC No. 4	1-70
LH Fwd Curb Light	115-VAC	Aft Main AC No. 4	1-70
LH Landing Light	115-VAC	Aft Main AC No. 1	1-70
LH Taxi Light	115-VAC	Aft Main AC No. 2	1-70
Light Cargo Red	115-VAC	Aft Main AC No. 1	1-70
Ltg Trans, 28-VAC	115-VAC	Aft Main AC No. 3	1-70
Ltg Trans, 28-VAC	115-VAC	Fwd Main AC No. 2	1-66
Main Ckt Brk Pnl Light	115-VAC	Fwd Main AC No. 2	1-66
Motor LH Ldg Light	115-VAC	Fwd Main AC No. 1	1-66
Motor RH Ldg Light	115-VAC	Fwd Main AC No. 4	1-65

CIRCUIT BREAKER	POWER	BUS	FIGURE
NAV Flasher Control	28-VDC	Main DC No. 2	1-67
NAV Flood Light	115-VAC	Avionics AC 1	1-69
NAV Inst Light	115-VAC	Avionics AC 1	1-69
NAV Panel Light	115-VAC	Avionics AC 1	1-69
Navigation Light	115-VAC	Fwd Main AC No. 4	1-65
No Smoking Light	115-VAC	Aft Main AC No. 2	1-70
Overhead Panel Flood Light	115-VAC	Fwd Main AC No. 3	1-65
OVHD PNL Light	115-VAC	Fwd Main AC No. 2	1-66
Ovhd Cargo Gr 1 Light	115-VAC	Aft Main AC No. 3	1-70
Pilot Inst Ctr Pnl Light	115-VAC	Fwd Main AC No. 1	1-66
Pilot Inst Flood Light	115-VAC	Emerg AC	1-61
Pilot Inst Main Pnl Light	115-VAC	Fwd Main AC No. 2	1-66
Pilot Side Console Light	115-VAC	Fwd Main AC No. 1	1-66
Radome Service	26-VAC	26-VAC Lighting	1-62
Relief Crew Dome Light	115-VAC	Aft Main AC No. 3	1-70
Relief Crew Reading Light	115-VAC	Aft Main AC No. 3	1-70
RH Aft Curb Light	115-VAC	Aft Main AC No. 3	1-70
RH Fwd Curb Light	115-VAC	Aft Main AC No. 4	1-70
RH Landing Light	115-VAC	Aft Main AC No. 4	1-70
RH Taxi Light	115-VAC	Aft Main AC No. 3	1-70
Seat Belt Light	115-VAC	Aft Main AC No. 2	1-70
Signal Light Outlet	28-VDC	ISOL DC Bus	1-64
Smoke & Seat Belt Light	28-VDC	Main DC No. 2	1-67
Taxi & Landing Light	115-VAC	Fwd Main AC No. 1	1-66
Taxi & LE Light Control	28-VDC	Main DC No. 2	1-67
Thunderstorm Light	28-VDC	Main DC No. 2	1-67
Troop Aisle Light	115-VAC	Aft Main AC No. 4	1-70
Troop Courier Reading, 28-VAC Lighting	115-VAC	Aft Main AC No. 3	1-70
Troop Reading, LH	115-VAC	Aft Main AC No. 4	1-70
Troop Reading, RH	115-VAC	Aft Main AC No. 4	1-70

LOW ALTITUDE RADAR ALTIMETER SYSTEM.

Radar Alt 1	115-VAC	Avionics AC 1	1-69
Radar Alt 2	115-VAC	Avionics AC 2	1-69

MALFUNCTION, DETECTION, ANALYSIS AND RECORDING (MADAR) SUBSYSTEM.

MADAR (3)	115-VAC	Fwd Main AC No. 4	1-65
MADAR Absolute Press Xducer	115-VAC	Fwd Main AC No. 3	1-65
MADAR Control & APU Egt	28-VDC	Main DC 1	1-68

CIRCUIT BREAKER	POWER	BUS	FIGURE
MADAR Dru	26-VAC	26-VAC Nav 2	1-69
MADAR Flap Pos Xducer	26-VAC	26-VAC Inst 2	1-66
MADAR Xducer Compt Temp	115-VAC	Aft Main AC No. 3	1-70
MADAR Xducer Eng 1	115-VAC	Aft Main AC No. 1	1-70
MADAR Xducer Eng 2	115-VAC	Aft Main AC No. 2	1-70
MADAR Xducer Eng 3	115-VAC	Aft Main AC No. 3	1-70
MADAR Xducer Eng 4	115-VAC	Aft Main AC No. 4	1-70
MADAR Xducer LH Apu	115-VAC	Aft Main AC No. 2	1-70
MADAR Xducer Refrg	28-VDC	Main DC No. 2	1-67
MADAR Xducer Refrg	115-VAC	Aft Main AC No. 2	1-70
MADAR Xducer RH Apu	115-VAC	Aft Main AC No. 3	1-70
SLR Sys	28-VDC	Main DC No. 1	1-68
SLR Sys	26-VAC	26-VAC Nav 2	1-69
MISCELLANEOUS EQUIPMENT.			
Lav Water Heater (2)	115-VAC	Monitor AC No. 2	1-70
Relief Crew Galley (3)	115-VAC	Monitor AC No. 2	1-70
Relief Crew Lav (3)	115-VAC	Monitor AC No. 2	1-70
Troop Galley (3)	115-VAC	Monitor AC No. 3	1-70
Troop Lav (3)	115-VAC	Monitor AC No. 3	1-70
NAVIGATION SYSTEMS.			
ADF 1	28-VDC	Avionics DC 1	1-69
ADF 1	26-VAC	26-VAC Nav 1	1-69
ADF 2	28-VDC	Avionics DC 2	1-69
ADF 2	26-VAC	26-VAC Nav 2	1-69
AHRU 1	115-VAC	Emergency AC	1-61
AHRU 1 Excitation, 26-VAC, Attd	26-VAC	Emergency AC	1-61
AHRU 1 Excitation, 26-VAC, Hdg	26-VAC	Emergency AC	1-61
AHRU 1 Gyro Valid	28-VDC	Avionics ISO DC	1-69
AHRU 2	115-VAC	Avionics AC 2	1-69
AHRU 2 Excitation, 26-VAC, Attd	26-VAC	26-VAC Nav 2	1-69
AHRU 2 Excitation, 26-VAC, Hdg	26-VAC	26-VAC Nav 2	1-69
AHRU 2 Gryo Valid	28-VDC	Avionics DC 2	1-69
Aux Nav Conv	26-VAC	26-VAC Nav 2	1-69
Aux Nav Comptr	115-VAC	Avionics AC 2	1-69
BDHI Nav 1	28-VDC	Avionics DC 1	1-69
BDHI Nav 1	115-VAC	Nav AC 1	1-69
BDHI Nav 2	28-VDC	Avionics DC 2	1-69
BDHI Nav 2	115-VAC	Nav AC 2	1-69
BDHI Copilot	28-VDC	Avionics DC 1	1-69

CIRCUIT BREAKER	POWER	BUS	FIGURE
BDHI Copilot	115-VAC	Nav AC 1	1-69
BDHI Pilot	28-VDC	Avionics DC 2	1-69
BDHI Pilot	115-VAC	Nav AC 2	1-69
Doppler	115-VAC	Avionics AC 1	1-69
Doppler	26-VAC	26-VAC Nav 2	1-69
Glideslope 1	28-VDC	Avionics ISO DC	1-69
Glideslope 1	26-VAC	26-VAC ISO	1-69
Glideslope 2	28-VDC	Avionics DC 2	1-69
Glideslope 2	26-VAC	26-VAC Nav 2	1-69
IDNE Cont Pwr Supply	115-VAC	Avionics AC 1	1-69
IDNE Control Panel	28-VDC	Avionics DC 2	1-69
IDNE Control Panel	115-VAC	Nav AC 2	1-69
IDNE IMU	26-VAC	26-VAC Nav 1	1-69
LORAN	28-VDC	Avionics DC 1	1-69
Marker Beacon	28-VDC	Avionics DC 2	1-69
MMR LCU	26-VAC	26-VAC Nav 1	1-69
MMR LCU	28-VDC	Avionics DC 1	1-69
MMR LCU	115-VAC	Avionics AC 1	1-69
Multi-Mode Radar Distr	28-VDC	Avionics DC 2	1-69
Multi-Mode Radar Distr	115-VAC	Avionics AC 1 or 2	1-69
Multi-Mode Radar Distr	26-VAC	26-VAC Nav 2	1-69
Multi-Mode Radar Ku	28-VDC	Avionics DC 2	1-69
Multi-Mode Radar Ku	115-VAC	Avionics AC 1 or 2	1-69
Multi-Mode Radar Ku	26-VAC	26-VAC Nav 2	1-69
Multi-Mode Radar X	28-VDC	Avionics DC 2	1-69
Multi-Mode Radar X	115-VAC	Avionics AC 1 or 2	1-69
Multi-Mode Radar X	26-VAC	26-VAC Nav 2	1-69
Primary Nav Cmptr	115-VAC	Avionics AC 1	1-69
Primary Nav Conv	26-VAC	26-VAC Nav 1	1-69
Radar Beacon	115-VAC	Avionics AC 2	1-69
Station Keeping	115-VAC	Avionics AC 1	1-69
TACAN 1	28-VDC	Avionics DC 1	1-69
TACAN 1	115-VAC	Nav AC 1	1-69
TACAN 1	26-VAC	26-VAC Nav 1	1-69
TACAN 2	28-VDC	Avionics DC 2	1-69
TACAN 2	115-VAC	Nav AC 2	1-69
TACAN 2	26-VAC	26-VAC Nav 2	1-69
VHF Nav 1	28-VDC	Avionics Iso DC	1-69
VHF Nav 1	26-VAC	26-VAC ISO	1-69
VHF Nav 2	28-VDC	Avionics DC 2	1-69
VHF Nav 2	26-VAC	26-VAC Nav 2	1-69

CIRCUIT BREAKER	POWER	BUS	FIGURE
OXYGEN SYSTEM.			
Lox Qty Ind	115-VAC	Fwd Main AC No. 2	1-66
Oxygen Warn	28-VDC	Isolated DC	1-64
PARATROOP EQUIPMENT.			
Paratroop Air Deflect	28-VDC	Main DC No. 1	1-68
PNEUMATIC SYSTEMS.			
3000 PSI Pneu	115-VAC	Aft Main AC No. 4	1-70
3000/155 PSI Pneu	28-VDC	Main DC No. 2	1-67
Pneu Isolation Valve	115-VAC	Aft Main AC No. 1	1-70
PRESSURIZATION SYSTEM.			
Cabin Press. Cont Auto	115-VAC	Fwd Main AC No. 4	1-65
Cabin Press. Cont Manual	115-VAC	Emergency AC	1-61
Cabin Press. Low Warn Lt	28-VDC	Isolated DC	1-64
Emerg Depress	28-VDC	Emergency DC	1-61
STALLIMETER SYSTEM.			
Stallimiter 1	115-VAC	Avionics AC No. 2	1-69
Stallimiter 2	115-VAC	Avionics AC No. 1	1-69
Stallimiter Shaker Motor 1	28-VDC	Avionics DC No. 2	1-69
Stallimiter Shaker Motor 2	28-VDC	Avionics DC No. 1	1-69
Stallimiter Sys 1	28-VDC	Avionics DC No. 2	1-69
Stallimiter Sys 2	28-VDC	Avionics DC No. 1	1-69
TEST EQUIPMENT.			
VGH Rec	28-VDC	Avionics DC No. 2	1-69
VGH Rec	115-VAC	Avionics AC No. 2	1-69
WARNING SYSTEM.			
Annunciator Control Bright 1	28-VDC	Isolated DC	1-64
Annunciator Control Bright 2	28-VDC	Isolated DC	1-64
Annunciator Control Dim 1	28-VDC	Isolated DC	1-64
Annunciator Control Dim 2	28-VDC	Isolated DC	1-64

CIRCUIT BREAKER	POWER	BUS	FIGURE
Bunk & Aft Cargo Warn Horn	28-VDC	Emergency DC	1-61
Bunk & Aft Cargo Warning Horn	28-VDC	Normal Batt	1-72
Courier & Fwd Cargo Warn Horn	28-VDC	Emergency DC	1-61
Courier & Fwd Cargo Warning Horn	28-VDC	Stby Batt	1-72
Door Warn Ind Lt	28-VDC	Main DC No. 2	1-67
Ind Lt Test 1, 2, 3, 4	28-VDC	Isolated DC	1-64
Master Caution Control	28-VDC	Isolated DC	1-64
Smoke Detector	28-VDC	Isolated DC	1-64
Troop & Relief Crew Warn Horn	28-VDC	Emergency DC	1-61
Troop & Relief Crew Warning Horn	28-VDC	Stby Batt	1-72
WINDSHIELD RAIN REMOVAL SYSTEM.			
Copilot Wshld Wiper	115-VAC	Fwd Main AC No. 3	1-65
Pilot Wshld Wiper	115-VAC	Fwd Main AC No. 2	1-66
Rain Repellent Copilot	28-VDC	Main DC No. 2	1-67
Rain Repellent Pilot	28-VDC	Main DC No. 1	1-68
WING FLAPS AND SLAT SYSTEM.			
Asym Brake, Flap	115-VAC	Aft Main AC No. 1	1-70
Asym Brake, Slat	115-VAC	Aft Main AC No. 1	1-70
Asymmetry Cont			
Flap	28-VDC	Isolated DC	1-64
Slat	28-VDC	Isolated DC	1-67
Flap Pos Ind	28-VDC	Main DC No. 2	1-67
Flap Sys 1	28-VDC	Main DC No. 2	1-67
Flap Sys 4	28-VDC	Main DC No. 1	1-68
Slat Ind Flag	28-VDC	Main DC No. 1	1-68
Slat LH Pos	28-VDC	Main DC No. 1	1-68
Slat LH Pos	28-VDC	Main DC No. 2	1-67
Slat RH Pos	28-VDC	Main DC No. 1	1-68
Slat RH Pos	28-VDC	Main DC No. 2	1-67
Slat Sys 1	28-VDC	Main DC No. 2	1-67
Slat Sys 4	28-VDC	Main DC No. 1	1-68

AC POWER SUPPLY SYSTEM.

Alternating Current (115/200 VAC) is supplied by four main 80-KVA (kilovolt amperes) engine-driven generators operating in parallel, and two 80-KVA auxiliary power unit generators. Four engine-driven CSD (constant speed drive) units drive the four main generators. The right and left APU (auxiliary power unit) turbines drive the auxiliary generators. The APU power may be selected from either of the two generators. Emergency AC (115/200 volts) and DC (28 volts) power are provided by a hydraulic motor-driven emergency AC/DC generator. The emergency AC/DC generator has an output capacity of 3. 9 KVA. AC power is 115/200 volts, 3-phase, 400 Hz. An external power receptacle is located at fuselage station 947. 0, right side, for use when an external power source is required. Transformers are used to supply all reduced voltage AC power requirements.

Note

An 80-KVA generator rating means that the generator is capable of delivering 80 KVA continuously during both ground and air operations. A generator load of 80 KVA corresponds to a 1.0 (100 percent) reading on the related loadmeter.

Main Generators.

AC power is normally supplied by the four main generators operating in parallel through a tie bus (figure 1-58). A generator control unit for each main generator protects the generator against over- and under-excitation, over- and under-voltage, over- and under-frequency, unbalanced current, neutral current faults, and differential faults. If a main generator becomes deenergized for any of these reasons, a visual indication will be provided by a GEN OUT light on the electrical system control panel at the flight engineer's console. If the generator has been deenergized for any reason other than a differential fault condition, it can be reset by means of the related generator switch on the electrical system control panel, provided the fault has been cleared. If a differential fault has occurred, the generator is locked out so that it cannot be reset as long as permanent magnet generator power is available. After engine rotation has stopped, it can be reset by means of a reset button located on the connector side of the related generator control unit in a rack below the main AC power centers. The existence of a differential fault will be evidenced by the inability to reset the generator and by the fact that positioning the generator switch to "OFF" does not cause the GEN OUT light to go off. Mechanical failure of a main generator will be evidenced by a GEN FAIL light on the electrical system control panel.

Constant-Speed Drive (CSD) Units.

A constant-speed drive (CSD) unit is mounted on an accessory pad of each engine. The CSD mechanically couples to and drives the related main AC generator. Each CSD unit converts the variable input speed from the engine to an 8,000-RPM output in order to maintain generator frequency output at 400 Hz under changing conditions of electrical load. Each CSD system contains an oil reservoir. An oil-to-air heat exchanger is provided to cool the constant-speed drive oil. A disconnect switch, an oil temperature indicator, and a CSD FAIL warning light for each CSD unit are provided on the electrical system control panel.

External/Auxiliary Generator Power Sources.

Note

The 200/115 volt, 3-phase, 400 Hz AC external power source should have a capacity of 80 KVA. Its phase rotation must be A-B-C. One power unit which meets these requirements is the AF A/M32A-60.

External power or auxiliary generator power is used to energize the tie bus during normal ground start or shutdown of all engines. A contactor in the auxiliary generator-external power supply line prevents connecting both power sources to the tie bus at the same time. Provisions for momentary paralleling are incorporated so that when transferring from APU generator power or external power to main generator power, and vice versa, transfer can be effected without any power interruption to the airplane equipment. A short power interruption occurs when transferring from external power to the APU generator power or vice versa. A circuit breaker, installed on the bus protection panel, protects the panel against ground faults in the external power source. A phase sequence circuit prevents external power with reverse phase sequence from being connected to the airplane. The sequence of generator paralleling during engine start with generator control switches ON, is as follows:

(1) The APU is started, APU generator selector switch is in the position corresponding to the selected APU, and the external/APU power selector switch is in APU. The APU generator and external power disconnect contactor is closed and the APU generator is connected to the tie bus; all bus tie contactors are closed.

(2) When an engine is started and the main generator is up to speed and voltage, the generator line contactor closes and momentarily parallels the main generator with the APU generator. The bus tie contactor then opens, transferring the load buses to the main generator.

(3) Sequence 2 is repeated as each successive engine is started, and each main generator will supply its respective buses. The APU generator will finally be supplying power to the tie bus only.

(4) The external/APU power selector switch is turned "OFF"; and the No. 1 bus tie contactor closes, connecting the No. 1 generator to the tie bus. Each of the other generators will parallel to the No. 1 generator and connect to the tie bus. A sequencing circuit selects generator 1, 2, 3, or 4, in that order, to be connected to the tie bus if the preceding generator is inoperative.

The sequence of bus transfer to the auxiliary power generator during engine shutdown is as follows:

(1) The APU generator power is turned on, causing all bus tie contactors to open. The APU generator then connects to the tie bus.

(2) The bus tie switches are held, one at a time, in "GRD TRANS" until the respective BUS TIE light goes out and the GEN OUT light comes on and the associated bus tie contactor closes. The APU generator and the main generator momentarily parallel and the generator line contactor opens and the main generator is deenergized. The bus tie switches are released to NORM.

(3) If external power is used instead of APU power, the transfer sequence during shutdown will be the same.

AC System Buses.

There are 17 AC buses which are used as a power source for airplane equipment. They are as follows: eight main buses, two for each generator; two monitor buses, one each for generators 2 and 3; two avionics buses; two nav buses; two isolated buses, and an emergency bus. During normal operation, all buses are energized. Only the two isolated buses and the emergency bus are energized during operation of the emergency generator. In addition to the above, a tie bus is provided as a power transfer medium between the generators. The tie bus is connected to each generator and its associated buses through bus tie contactors. During normal operation, the bus tie contactors are closed and the tie bus is energized by all generators which are operating in parallel. Should any of the generators fail and become disconnected, the buses associated with the failed generator will still receive power from the tie bus. As long as at least one generator is operating, all AC buses except the monitor buses will be energized by the tie bus through the bus tie contactors. The avionics buses, nav buses, isolated buses, and emergency bus normally receive power through two automatically operated power transfer relays (figure 1-58). Should the power source for either power transfer relay fail, the relay will automatically switch to its other source. During operation of the emergency generator, the isolated buses may be deenergized by use of the ISOL BUS switch on the electrical system control panel.

AC SYSTEM CONTROLS.

With one exception, all controls for normal operation of the AC electrical system are located on the electrical panel (figure 1-74). The exception is the INST POWER switch located on the pilot's instrument panel (figure 1-9). During normal paralleled operation, all control switches except those associated with the auxiliary generator or external power are positioned to "ON" or "NORMAL," or to a guarded "OFF" position. In the following paragraphs, those controls which are used during an emergency are labeled (EMERGENCY).

Generator Switches.

Each main generator system is provided with a generator switch (figure 1-74). This three-position switch is used to control the testing and connection of the related generator to its main AC buses. The "ON" position permits the generator and the generator line contactor (figure 1-58) to be energized through the respective generator control unit. The "OFF" position deenergizes the generator and opens the generator line contactor. The TEST position is a momentary position which allows the generator to be energized but not the generator line contactor. The voltage and frequency output, by phase, can be checked while the generator is not connected to a bus. The generator can be reset by placing the generator switch to "OFF" then back to "ON," except when the generator has been tripped by a differential fault condition.

Bus Tie Switches.

Note

If the No. 1 bus tie contactor has failed, and both batteries are dead or disconnected, it is impossible to power the airplane bus system with external or APU power until a battery is replaced or the No. 1 bus tie contactor is replaced.

Each main generator system is provided with a bus tie switch (figure 1-74). This three-position switch controls the connection of the associated main generator to the tie bus or, when the tie bus is being supplied by a source other than the associated main generator, controls the connection of the related main AC buses to the tie bus. Placing the switch to "NORMAL" permits the bus tie contactor (figure 1-58) to be energized closed. The "OPEN" position deenergizes the bus tie contactor. After lockout has occurred, placing the switch to "OPEN," then back to "NORMAL," resets the bus tie contactor. The "GRD TRANSFER" position is used to transfer from main generator power to APU generator power or external power. Power for the bus tie contactors is supplied by the 28-volt DC battery bus (figure 1-64).

CSD Disconnect Switches (Emergency).

A guarded CSD DISC switch is provided for each of the CSD units (figure 1-74). This switch is used to disconnect the related CSD from the engine in the event of CSD or generator failure as evidenced by warning lights adjacent to the switch. The CSD DISC switches receive 28-volt DC power from the main DC buses No. 1 and No. 2 (figures 1-67 and 1-68).

Note

Once disconnected, a CSD cannot be re-connected except on the ground with the associated engine stopped.

Instrument Power Switch (Emergency).

A three-position INST POWER switch, located on the pilot's instrument panel (figure 1-9), permits manual control of the hydraulically driven emergency generator. Normally the switch is positioned at "NORM," and operation of the emergency generator is automatic. Placing the switch to "OFF" when the emergency generator is operating, breaks the ground circuit of the emergency generator control relay which interrupts the flow of AC and DC power through the relay (figure 1-58). This disconnects the emergency generator from the buses. Placing the switch to "EMERG" deenergizes a solenoid-operated hydraulic valve which opens to permit hydraulic pressure to operate the emergency generator.

Emergency Generator Test Switch.

A two-position EMERG GEN switch (see figure 1-74) is provided to test the emergency generator. Holding the switch in the momentary "TEST" position causes the emergency generator to operate and supplies signals to the voltmeter and frequency meter but does not connect it to any bus. Releasing the switch re-establishes the normal conditions for automatic operation. The switch controls 28-volt DC power from the emergency DC bus (figure 1-61).

Engine Fire Emergency Control Handles (Emergency).

When pulled, each fire emergency control handle opens the generator line contactor of the related generator and deenergizes the generator.

Monitor Bus Switches.

A monitor bus switch is provided in main generator systems No. 2 and No. 3. This two-position switch controls the closing of the related monitor relay (figure 1-58). In the "NORM" position, the monitor relays automatically close to energize the monitor buses when at least two main generators are operating and connected to their respective buses. When less than two generators are operating, the monitor relays automatically open and deenergize the monitor buses. The "OVRD" position is used to close the monitor relay and energize the associated monitor bus when less then two generators are operating. Power for closing the monitor bus relays is from the 28-volt DC battery bus (figure 1-64).

APU Generator Selector Switch.

A three-position APU generator selector switch (figure 1-74) is provided to select either the left hand APU or the right hand APU to supply electrical power during ground operation or inflight emergencies. Selecting either the "L APU" or "R APU" position will energize the respective APU generator to supply power to the APU/external power contactor.

APU/External Power Selector Switch.

A three-position selector switch (figure 1-74) is provided to select either APU power or external power for ground operation. Selecting either "APU" or "EXT PWR" will connect the applicable power source to the aircraft tie bus.

AC SYSTEM INDICATORS.

With but two exceptions all indications for the AC electrical system are located on the electrical control panel (figure 1-74). The exceptions are an EMER PWR ON light located on the pilot's instrument panel (figure 1-9) and the EXT PWR ON light in the external power receptacle.

AC Loadmeters.

Five AC loadmeters, one for each main generator and one for the auxiliary and external power source, are located on the AC control panel (figure 1-74). Each loadmeter gives a continuous indication of the percent of total load capability being supplied by phase A of the respective power source. An indication of 1.0 (100 percent) represents the full load capability of the power source. A 1.0 indication on the external power loadmeter indicates the maximum handling capability of the airplane.

CSD Oil Temperature Gages.

A CSD OIL TEMP gage (figure 1-74) is provided for each main generator system CSD. The gages receive 28-volt DC power from the main DC buses No. 1 and No. 2 (figures 1-67 and 1-68).

CSD Fail Lights.

Four CSD FAIL lights, one for each CSD, are located on the electrical control panel (figure 1-74). A CSD FAIL light comes on when the oil temperature of the associated CSD is above 170° C, or when the oil charge pressure is below the set limit. The CSD FAIL lights receive 28-volt DC power from the main DC buses No. 1 and No. 2 (figures 1-67 and 1-68).

Generator Fail Lights.

Six GEN FAIL lights, one for each main generator and one for each APU generator, are located on the electrical control panel (figure 1-74). A GEN FAIL light comes on when the respective generator has had a mechanical failure which causes the rotor to rub the stator. The GEN FAIL lights receive 28-volt DC power from the main DC buses No. 1 and No. 2 through circuit breakers labeled GEN and CSD FAIL LT (figures 1-67 and 1-68). The APU GEN FAIL lights receive 28-volt DC power from the battery bus through a circuit breaker labeled APU GEN FAIL LT (figure 1-64).

Generator Out Lights.

Six GEN OUT lights, one for each main generator and one for each APU generator, are located on the electrical control panel (figure 1-74). A GEN OUT light comes on when one of the protective features in the respective generator system has deenergized a relay in the generator control unit, deenergizing the generator and disconnecting it from all buses. Placing the associated generator switch to "OFF" normally causes the GEN OUT light to go off; however, if the generator has been tripped by differential fault, the GEN OUT light cannot be put out with the generator switch. The GEN OUT lights receive 28-volt DC power from the main DC buses No. 1 and No. 2 through circuit breakers labeled GEN and CSD FAIL LT (figures 1-67 and 1-68).

Bus Tie Open Lights.

A BUS TIE OPEN light (figure 1-74) is provided for each main generator system. A BUS TIE OPEN light comes on when the related bus tie contactor is open. The BUS TIE OPEN lights receive 28-volt DC power from the main DC buses No. 1 and No. 2 through circuit breakers labeled GEN and CSD FAIL LT (figures 1-67 and 1-68).

Main Bus Off Lights.

Each main AC bus is provided with a FWD OFF and an AFT OFF light (figure 1-74). An OFF light comes on when the related bus voltage drops below 90 (±5) volts. The light remains on until bus voltage has increased above 105 (±5) volts. Power for control of the main bus OFF lights is supplied from the respective main AC buses. Power for the bus OFF lights is supplied from the isolated 28-volt DC bus (figure 1-64).

Avionics Bus Off Lights.

Each avionics bus is provided with an AVION BUS OFF light (figure 1-74). Either light comes on when the applicable avionics bus voltage drops below 90 (±5) volts. The light remains on until bus voltage has increased above 105 (±5) volts. Directly beneath each AVION BUS OFF light there is an arrow-head light to indicate which generator is supplying power to the respective avionics bus. During normal operation, the avionics bus No. 1 is powered by the No. 1 generator through the No. 1 power transfer relay, and the avionics bus No. 2 is powered by the No. 4 generator through the No. 2 power transfer relay. Illumination of the arrowhead in either of these lights indicates that the respective avionics bus is receiving power from an alternate generator. Avionics bus No. 1 receives alternate power from generator No. 2, and avionics bus No. 2 receives alternate power from generator No. 3. Power for control of the AVION BUS OFF lights is supplied from the respective avionics bus. A circuit breaker is provided for each phase of the respective avionics AC bus voltage. Power for the AVION BUS OFF lights is supplied from the 28-volt isolated DC (figure 1-64).

Isolated AC Bus Off Light.

An ISO AC BUS OFF light (figure 1-74) comes on when isolated AC bus voltage drops below 90 (±5) volts. The light remains on until bus voltage increases above 105 (±5) volts. Power for control of the ISO AC BUS OFF light is supplied from the isolated AC bus. A circuit breaker is provided for each phase of the isolated bus voltage. Power for the ISO AC BUS OFF light is supplied from the emergency DC bus (figure 1-61).

Emergency AC Bus Off Light.

An EMERG AC BUS OFF light (figure 1-74) comes on when emergency AC bus voltage drops below 90(±5) volts. The light remains on until bus voltage increases above 105 (±5) volts. Power for control of the

EMERG AC BUS OFF light is supplied from the emergency AC bus. A circuit breaker is provided for each phase of the emergency bus voltage. Power for the EMERG AC BUS OFF light is supplied from the battery bus (figure 1-64).

Emergency Generator Emergency Power Light.

An EMERG GEN EMER PWR light, located on the electrical control panel (figure 1-74), comes on when the emergency generator is operating and supplying power to the associated buses. The light receives 28-volt DC power from the emergency DC bus through the EMERG PWR CONT circuit breaker (figure 1-61).

Emergency Power On Light.

An EMER PWR ON light, located on the pilot's instrument panel (figure 1-9), comes on when the emergency generator is operating and supplying power to the associated buses. The light receives 28-volt DC power from the emergency DC bus through the EMERG PWR CONT circuit breaker (figure 1-61).

External Power Light.

An EXT POWER light (figure 1-74) comes on when external power of the proper phase sequence and voltage is connected to the airplane.

AC Voltmeter, Frequency Meter, and Selector Switches.

An AC VOLTS meter and CPS FREQ meter (figure 1-74) are provided to monitor the frequency and voltage output per phase of the various AC sources. Selection of the source and phase to be monitored is accomplished by two rotary selector switches located adjacent to the indicators. The seven-position GEN VOLTS & FREQ switch selects the source to be monitored, and the three-position PHASE switch selects the phase. Isolation of a selected main generator is made possible by the "TEST" position of the associated generator control switch. Power for operation of the meters is supplied from the respective source through circuit breakers on the emergency circuit breaker panel, APU and external power control circuit breaker panel, and AC load center circuit breaker panel (figures 1-61 and 1-70).

DC POWER SUPPLY SYSTEM.

Direct-current power is normally furnished by two 200-ampere transformer-rectifiers operating in parallel. The input to the No. 1 and No. 2 transformer-rectifiers is 200/115-volt AC power supplied through the No. 1 and No. 2 power transfer relays respectively. The output voltage of the units varies from approximately 28.5 volts to 26 volts throughout a current range of 5 amperes to 200 amperes. System protection is provided by a 3-phase circuit breaker in the input power feeders to each transformer-rectifier, and a reverse current relay in each output feeder. A ground fault on an output feeder opens the reverse current relay, which isolates the TR from the bus and then opens the 3-phase input circuit breaker which deenergizes the transformer rectifier. The remaining unit will then supply the required power to all DC buses.

Batteries.

Two 24-volt, 5.0 ampere-hour batteries are provided as an emergency power source. The batteries are located inside the cargo compartment on the forward right side.

DC System Buses.

There are eight buses in the DC system. They are as follows: two main DC buses, two avionics DC buses, two isolated DC buses, an emergency DC bus, and a battery bus. During normal operation, all buses are energized. During operation of the emergency generator, only the two isolated buses, the emergency bus, and the battery bus are energized. Reverse current relays prevent emergency power from being applied to the main and avionics buses. During emergency generator operation, the two isolated DC buses may be deenergized by use of the ISOL BUS switch. The battery bus then reverts to battery power.

DC SYSTEM CONTROLS.

Battery Switch.

A BATTERY switch (figure 1-74), is located on the DC system control panel. Placing the switch to "NORM" or "STBY" connects the respective battery to the battery bus. Placing the switch to "OFF" disconnects both batteries from the battery bus. In the "NORM" position, both batteries are charged. In the "STBY position, only the standby battery is charged.

Isolated Bus Switch.

An ISO BUS switch (figure 1-74), is located on the DC system control panel. The switch is provided for use only during operation of the emergency generator. When the switch is in "NORM," the isolated AC and DC buses will receive emergency power if the emergency generator is running. Placing the switch to "OFF" disconnects the isolated AC and DC buses from emergency power. The ISO BUS switch cannot be used to deenergize these buses during normal operation.

DC SYSTEM INDICATORS.

Main Bus Off Lights.

The OFF lights, one marked MAIN BUS 1 and the other marked MAIN BUS 2 (figure 1-74), are provided on the DC system control panel to indicate when the main DC buses are de-energized. Power for control of the MAIN BUS OFF lights is supplied by the respective main DC bus (figures 1-67 and 1-68). Power for the MAIN BUS OFF Lights is supplied by the isolated 28-volt DC bus (figure 1-64).

Isolated DC Bus Off Light.

An ISO DC BUS OFF light (figure 1-74) comes on when the isolated DC bus is de-energized. Power for control of the light is supplied by the isolated DC bus (figure 1-64). Power for the ISO DC BUS OFF light is supplied by the emergency DC bus (figure 1-61).

Emergency DC Bus Off Light.

An EMERG DC BUS OFF light (figure 1-74) comes on when the emergency DC bus is de-energized. Power for control of the light is supplied by the emergency DC bus (figure 1-61). Power for the EMERG DC BUS OFF light is supplied by the battery bus (figure 1-64).

Battery Bus Lights.

A BATTERY light and an OFF light (figure 1-74), each marked BATTERY BUS are located on the electrical control panel. The BATTERY light comes on when the battery bus is energized by either the normal or standby battery only. The OFF light comes on when the battery bus is deenergized. Power for control of the OFF light is supplied by the battery bus (figure 1-62). Power for the BATTERY light and for the OFF light is supplied by either the normal or standby battery, depending on battery switch position.

DC Loadmeters.

Two DC loadmeters, one for each transformer-rectifier, are located on the electrical control panel (figure 1-74). The indicators display the load that each transformer-rectifier is carrying in percentage of rated output. A 1.0 (100 percent) indication represents a load of 200 amperes.

DC Voltmeter and Selector Switch.

A DC VOLTS meter (figure 1-74) is provided to monitor the voltage output of the various DC sources. Selection of the source to be monitored is accomplished by a rotary VOLT SEL switch on the electrical control panel (figure 1-74). Power for operation of the DC voltmeter is supplied from the respective source.

EMERGENCY AC/DC POWER SUPPLY SYSTEM.

A hydraulic motor-driven generator, powered by the No. 2 hydraulic system, is installed in the center fuselage near the No. 2 hydraulic service center. The generator automatically provides emergency AC and DC power in the event all AC power is lost. The de-energizing of a 115-volt AC emergency bus power relay starts a series of events which puts the emergency generator into operation. The generator supplies AC power to the emergency AC bus, the isolated AC buses, DC power to the emergency DC bus, the isolated DC buses and the battery bus. This emergency power is supplied to maintain operation of the pilots' flight instruments and the minimum warning, control, navigation, and communication equipment.

The emergency bus power relay is normally controlled by power from the main generators through the No. 1 power transfer relay (figure 1-58). The INST POWER switch (figure 1-9) on the pilot's main instrument panel allows the pilot to turn the generator on or off if required. A switch on the electrical system control panel, on the flight engineer's console, permits testing of the emergency generator output without connecting it to any of the buses.

It should be noted that in the event both transformer-rectifier units fail without a loss of AC power to the emergency bus power relay, the emergency generator will not automatically operate and supply power to the associated buses. With the battery switch in NORM or STBY, power from the battery will be supplied through the emergency bus to keep the hydraulic motor control solenoid energized. If such a failure should occur, the emergency generator would have to be turned on with the INST POWER switch (figure 1-9). The BATTERY light will come on to provide an indication of this condition (figure 1-74).

During operation of the emergency generator, with normal electric power supplied to the airplane's electrical system, hydraulic system No. 2 pressurized and the EMERG GEN switch in the "TEST" position, the frequency meter should indicate from 380 to 420 Hz. The generator will indicate in the high voltage and frequency range in the unloaded condition. Nominal generator voltage and frequency will indicate 115 volts and 400 Hz when supplying power to its related buses.

LIGHTING SYSTEM.

EXTERIOR LIGHTS.

The exterior group of airplane lights (figure 1-75) consists of a retractable landing light mounted under each

wing tip panel, one two filament narrow beam taxi/ landing light mounted on the nose landing gear strut, two wide-beam taxi lights mounted on each of the main landing gear doors, three navigation (position) lights located on the left wingtip, right wingtip, and the trailing edge of the tail cone, two fuselage lights mounted on the top and bottom of the fuselage, three anti-collision lights mounted on the top and bottom of the fuselage and the top aft end of the tail cone, two aerial refueling slipway lights located in the slipway, and two wing leading edge and engine inlet inspection lights mounted on each side of the forward fuselage.

Landing Lights.

A landing light is flush mounted under each wing tip panel and on the nose landing gear strut. Switches for extending, retracting and illumination of the lights are located on the LANDING LIGHTS panel (figure 1-76). The two extension and retraction switches are three-position switches. The RIGHT MOTOR switch controls the right-hand landing light extension and retraction motor, when the switch is placed to "RET" or "EXT." The LEFT MOTOR switch controls the left motor in the same manner. A LT EXTENDED light located above the switches, comes on when the landing lights leave the retracted position. When either motor switch is placed to the "OFF" position, the landing light motor is turned off and the light locks in position. Two, two-position LEFT and RIGHT switches control the illumination of the wing landing lights. A two-position NOSE switch controls the illumination to the nose landing light. When either switch is placed to the "ON" position, the corresponding landing light comes on. When either switch is placed to the "OFF" position, the corresponding light goes out.

Note

These lights must be out of their retracted position before they are used as taxi lights, as they depend on airflow for cooling. Do not operate longer than 25 minutes when the light is extended less then 20 degrees.

The left landing light lamp receives 115-volt AC power from the aft main AC bus No. 1 The left landing light motor receives 115-volt AC power from the forward main AC bus No. 1. The landing light illumination control power is supplied by the 28-volt main DC bus No. 1 (figures 1-66, 1-68, and 1-70).

The right landing light lamp receives 115-volt AC power from the aft main AC bus No. 4. The right landing light motor receives 115-volt AC power from the forward main AC bus No. 4. The landing light illumination control power is supplied by the 28-volt main DC bus No. 1 (figures 1-65, 1-68, and 1-70). The LT EXTENDED light receives 28-volt DC power from the main DC bus No. 1 (figure 1-68).

The nose landing light lamp is controlled by the two-position NOSE switch. Placing the switch to "ON" energizes both filaments in the nose gear taxi/landing light. The light control relays receive 28-volt DC power from the main DC bus No. 2 (figure 1-67). The landing light receives 115-volt AC power from the forward main AC bus No. 1 (figure 1-66).

Taxi Lights.

The taxi lights consist of one narrow beam, two-filament, nose gear strut-mounted taxi/landing light, and two lights mounted on each forward main landing gear door. The lights are controlled by a TAXI switch (figure 1-76). Placing the switch to "ON" energizes light control relays that route power to the taxi filament of the nose gear taxi-landing light to the four main landing gear door taxi lights and also to the wing leading edge and engine inlet inspection lights. The light control relays receive 28-volt DC power from the main DC bus No. 2 (figure 1-67). The nose gear taxi light receives 115-volt AC power from the forward main AC bus No. 1 (figure 1-66). The right main landing gear taxi lights receive 115-volt AC power from the aft main AC bus No. 3 (figure 1-70). The left main landing gear door taxi lights receive 115-volt AC power from the aft main AC bus No. 2 (figure 1-70).

Wing Leading Edge and Engine Inlet Inspection Lights.

Two wide-beam wing leading edge and engine inlet inspection lights mounted on each side of the forward fuselage provide ground and inflight illumination of the wing leading edge and engine inlets. Placing the LEADING EDGE switch (figure 1-76) to the "ON" position energizes a light control relay that routes power to the lights. The light control relay receives 28-volt DC power from the main DC bus No. 2 (figure 1-67.) The wing leading edge inspection lights receive 115-volt AC power from the aft main AC bus No. 4 (figure 1-70).

Note

These lights also come on when the TAXI LIGHT switch is placed to "ON."

Navigation Lights.

The navigation lighting system consists of three, two -bulb light assemblies. A red light is on the left wing tip, a green light is on the right wing tip, and a white light is on the aft point of the empennage bullet. These lights are controlled by a NAVIGATION switch (figure 1-76). Placing the switch to "STEADY" routes 28-volt DC power to the flasher unit that de-energizes the flasher circuit and allows steadv illumination of the lights. Placing the switch to "FLASH" removes the 28-volt DC power from the flasher unit and allows the lights to flash. The 28-volt DC power comes from the main DC bus No. 2 (figure 1-67). The navigation lights receive 115-volt AC power from the forward main AC bus No. 4 (figure 1-65).

Fuselage Lights.

Two white fuselage lights are mounted at approximately the top and bottom center of the fuselage. These lights are controlled by a FUSELAGE switch. Placing the switch to "ON" routes 115-volt AC power to the lights. This power comes from the forward main AC bus No. 2 (figure 1-66).

Anti-Collision Lights.

The aircraft is equipped with two oscillating light assemblies containing two tandem lights and a motor and one rotating light assembly contalning two lights and a motor. One oscillating light assembly is mounted on the top, forward portion of the fuselage, another is mounted on the bottom of the fuselage, and the rotating light asembly is mounted on the top aft end of the empennage. The lights and motors are controlled by a ANTI-COLLISION switch (figure 1-70). Placing the switch to "LWR" supplies 115-volt AC power to the lower light assembly only. This power comes from the forward main AC bus No. 2 (figure 1-66). Placing the switch to "ALL" supplies power to the lower and to the upper light assemblies. The upper light assemblies receive 115-volt AC power from the forward main AC bus No. 3. (figure 1-65).

Note

The "LWR" position may be used during inflight refueling or instrument conditions to eliminate the upper lights.

Aerial Refueling Slipway Lights.

Two aerial refueling slipway lights mounted in the slipway are used to illuminate the slipway area during air refueling operations. The lights are controlled by refueling door limit switches and a rotary dimming switch labeled AERIAL REFUEL on the co-pilot's side of the overhead panel. If the door limit switch fails, a springloaded toggle switch located forward of the slipway door manual release handle, overrides the limit switch and turns on the lights. The 115-volt forward main AC bus No. 2 supplies power to the dimming switch auto-transformer (figure 1-66). The transformer supplies up to 28 volts AC power to the lights through a circuit breaker located to the left of the AERIAL REFUEL dimming switch.

ACCESS AREA AND INSPECTION LIGHTS.

Radome Area Inspection Lights.

Two radome area inspection lights are provided in the radome area. One, two-way switch mounted on each side of the radome/visor pressure bulkhead controls the lights. The forward main AC bus No. 2 (figure 1-66) supplies 115-volt AC power to the relief crew lighting transformer. The transformer supplies 28-volt AC power to the lights through a circuit breaker on the flight engineer's No. 1 circuit breaker panel (figure 1-62).

Nose Landing Gear Area Inspection Lights.

Three landing gear area inspection lights are provided in the nose wheel well area, one of which is adjusted to illuminate the nose gear downlock target. One, two-way switch on the forward loadmaster's control panel, and one, two-way switch in the nose wheel well inspection light control box controls the lights. The AC monitor bus No. 2 supplies 115-volt AC power to the light transformer through a circuit breaker on the aft No. 2 circuit breaker panel (figure 1-70). The transformer supplies 28-volt AC power to the lights through a circuit breaker located above the NLG INSP switch on the loadmaster's forward control panel (figure 1-122).

Main Landing Gear Inspection Lights.

Eight lights are provided for inspection and service of the main landing gear. A light is located forward and aft in each wheel well. The lights are controlled by four, two-way switches. One switch is located in each main landing gear pod, one switch is located in the left main landing gear inspection light control box and the other switch is in the right main landing gear inspection light control box. The AC monitor bus No. 2 supplies 115-volt AC power to the left main landing gear inspection light transformer (figure 1-70). The transformer supplies 28-volt AC power to the lights through, a circuit breaker on the left main landing gear inspection light control box.

The AC monitor bus No. 3 supplies 115-volt AC power to the right main landing gear inspection light transformer (figure 1-70). The transformer supplies 28-volt AC power to the lights.

Single Point Ground Refueling Receptacle Lights.

Lighting of the single point ground refueling receptacles is provided by a light installed in each receptacle door. Each light is controlled by a door-operated switch. The lights receive 28-volt AC power from the left and right main landing gear inspection light transformers through circuit breakers on the left and right main landing gear inspection light control boxes.

INTERIOR LIGHTS.

The interior lights provide general illumination of the cargo compartment (including ramp lighting), flight

station, relief crew compartment courier compartment, troop compartment, supplementary lighting of instrument and control panels, and emergency exit lighting (figure 1-77). The lights are controlled by toggle switches and rotary dimming controls. The rotary dimming controls provide "OFF" and "BRT" positions and provide light dimming by varying the voltage output of a variable auto-transformer.

Flight Station Access Lights.

Flight station access lighting is provided by two light fixtures located in the stairwell overhead. These lights are controlled by a two-way FLT STA ACCESS switch located on the loadmaster's forward control panel (figure 1-122) and a two-way FLA STA ACCESS LT switch located on the switch plate on the aft side of the flight station entrance.

Power from the 115-volt AC monitor bus No. 2 to the forward lighting transformer through a PWR XFMR circuit breaker on the loadmaster's forward control panel supplies 28-volt AC power to the lights through a circuit breaker located above the switch.

Pilot's Station Lights.

PILOT'S MAIN INSTRUMENT PANEL LIGHTS. The pilot's main instrument panel lighting is provided by integral lights in the controls and indicators mounted on the panel; edge lights in the panels, in the navigation selector panel located above the pilot's main instrument panel, and in the engine emergency shutdown control panel located above the center instrument panel. The lights are controlled by a rotary dimming control labeled INSTRUMENTS on the pilot's side of the overhead console. The 115-volt forward main AC bus No. 2 supplies power to the dimming control auto-transformer (figure 1-66). The dimming control supplies up to 5.4 volts AC power to the lights through two circuit breakers located to the right of the INSTRUMENTS dimming control.

PILOT'S MAIN INSTRUMENT PANEL FLOOD LIGHTS. The pilot's main instrument panel flood lighting is provided by four flood lights mounted under the pilot's glareshield to the left of the airplane centerline, and three flood lights mounted symmetrically under the center instrument glareshield. These flood lights are controlled by a rotary dimming control labeled FLOOD on the pilot's side of the overhead console. The 115-volt AC emergency bus supplies power to the dimming control auto-transformer (figure 1-61). The dimming control supplies up to 28-volts AC power to the flood lights through a circuit breaker located to the right of the FLOOD control switch.

PILOT'S SIDE CONSOLE AND EMERGENCY CIRCUIT BREAKER PANEL LIGHTS. The pilot's side console and emergency circuit breaker panel lighting is provided by integral lights in the panels. The lights are controlled by a rotary dimming control labeled SIDE CONSOLE on the pilot's side of the overhead console. The 115-volt forward main AC bus No. 1 supplies power to the dimming control auto-transformer (figure 1-66). The dimming control supplies up to 5.4 volts AC power to the lights through two circuit breaker located to the right of the SIDE CONSOLE dimming control.

PILOT'S UTILITY LIGHT. A utility light is mounted on the left side of the overhead panel. The light assembly is controlled by a self-contained rotary dimming control through a circuit breaker located to the left of the OVERHEAD FLOOD dimming control with power from the 28-volt AC tap on the dimming control auto-transformer labeled OVERHEAD FLOOD on the copilot's side of the overhead console. The 115-volt forward main AC bus No. 3 supplies power to the OVERHEAD FLOOD dimming control auto-transformer (figure 1-65).

PILOT'S LETDOWN CHART HOLDER LIGHT. A light is provided in the pilot's letdown chart holder that is mounted under the glareshield to the left of the pilot's main instrument panel. The light is controlled by a rotary dimming control integral with the chart holder. The 115-volt emergency AC bus supplies power to the pilot's FLOOD dimming control auto-transformer (figure 1-61). The transformer supplies 28-volt AC power to the light through a circuit breaker located to the right of the FLOOD dimming control.

Pilot's Overhead Panel Lights.

PILOTS' OVERHEAD PANEL LIGHTS. The pilots' overhead panel lighting is provided by edge lights in the panels. The lights are controlled by a rotary dimming control labeled OVERHEAD PANEL LIGHTS on the aft center part of the overhead panel. The 115-volt AC bus No. 2 supplies power to the dimming control auto-transformer (figure 1-66). The transformer supplies up to 5.4 volts AC power to the lights through two circuit breakers located to the left of the OVERHEAD PANEL LIGHTS dimming control.

PILOT'S OVERHEAD PANEL FLOOD LIGHTS. The pilots' overhead panel flood lighting is provided by eight lights mounted in the overhead panel step breaks aft of and between the panels. The lights are controlled by a rotary dimming control labeled OVERHEAD FLOOD on the pilots' overhead panel. The 115-volt forward main AC bus No. 3 supplies power to the dimming control auto-transformer (figure 1-65). The transformer supplies up to 28 volts AC power to the flood lights through a circuit breaker located to the left of the OVERHEAD FLOOD dimming control.

Pilots' Center Instrument Panel Lights.

The pilots' center instrument lighting is provided by integrally lighted controls and indicators mounted on

the panel, and edge lights in the crosswind, brake and anti-skid panels.

On 68305, 70168, 00445 and up and airplanes modified by T.O. 1319, the landing gear position indicators are edge lighted.

The lights are controlled by a rotary dimming control labeled CENTER INSTRUMENT PANEL LIGHTS on the pilots' overhead panel. The 115-volt forward main AC bus No. 1 supplies power to the dimming control auto-transformer (figure 1-66). The transformer supplies up to 5.4 volts AC power to the lights through three circuit breakers located to the right of the CENTER INSTRUMENT PANEL LIGHTS dimming control.

Pilots' Center Console Lights.

The pilots' center console lighting is provided by edge lights in the panels mounted on the panel. The lights are controlled by a rotary dimming control labeled CENTER CONSOLE LIGHTS on the aft center part of the overhead console. The 115-volt forward main AC bus No. 2 supplies power to the dimming control auto-transformer (figure 1-66). The transformer supplies up to 5.4 volts AC power to the lights through three circuit breakers located on each side of the CENTER CONSOLE LIGHTS dimming control.

Copilot's Station Lights.

COPILOT'S MAIN INSTRUMENT PANEL LIGHTS. The copilot's main instrument panel lighting is provided by integrally lighted controls and indicators mounted on the panel and edge lights in the panels. The lights are controlled by a rotary dimming control labeled INSTRUMENTS on the copilot's side of the overhead console. The 115-volt forward main AC bus No. 3 supplies power to the dimming control auto-transformer (figure 1-65). The transformer supplies up to 5.4 volts AC power to the lights through two circuit breakers located to the left of the INSTRUMENTS dimming control.

COPILOT'S MAIN INSTRUMENT PANEL FLOODLIGHTS. The copilot's instrument panel floodlighting is provided by four floodlights mounted under the copilot's glare shield to the right of the aircraft's centerline. These floodlights are controlled by a rotary dimming control labeled FLOOD on the copilot's side of the overhead console. The 115-volt forward main AC bus No. 2 supplies power to the dimming control auto-transformer (figure 1-66). The transformer supplies up to 28-volt AC power to the lights through a circuit breaker located to the left of the FLOOD dimming switch.

COPILOT'S SIDE CONSOLE LIGHTS. The copilot's side console lighting is provided by integral lights in the panels mounted on the side console. The light assemblies are controlled by a self-contained rotary dimming control through a circuit breaker located to the left of the SIDE CONSOLE dimming control with power from the 28-volt AC tap on the dimming control auto-transformer labeled SIDE CONSOLE on the copilot's side of the overhead console. The 115-volt forward main AC bus No. 2 supplies power to the auto-transformer dimming control (figure 1-66).

COPILOT'S UTILITY LIGHT. A utility light is mounted on the right side of the overhead console. The light is controlled by a self-contained rotary dimming switch. The 115-volt forward main AC bus No. 2 supplies power to the FLOOD dimming switch auto-transformer (figure 1-66). The transformer supplies 28-volt AC power to the light through a circuit breaker located to the left of the FLOOD dimming control.

COPILOT'S LETDOWN CHART HOLDER LIGHT. A light is provided in the copilot's letdown chart holder that is mounted under the glareshield to the right of the copilot's main instrument panel. The light is controlled by a rotary dimming switch integral with the chart holder. The 115-volt forward main AC bus No. 2 supplies power to the copilot's FLOOD dimming control auto-transformer (figure 1-66). The transformer supplies 28-volt AC power to the light through a circuit breaker located to the left of the FLOOD dimming control.

Flight Station Thunderstorm Lights.

Flight station thunderstorm Lighting provides for immediate flight station flood lighting to its maximum intensity during thunderstorm conditions. Thunderstorm lighting is controlled by the THUNDERSTORM switch on the copilot's right forward side of the overhead panel. The switch controls the following lights:

Pilot's Instrument Panel Floodlights
Pilots' Center Instrument Panel Floodlights
Pilots' Standby Compass
Pilots' Overhead Console Floodlights
Flight Station Dome Lights
Copilot's Instrument Panel Floodlights
Flight Engineer's Worktable Floodlights
Navigator's Worktable Floodlights
All Caution and Annunciator Lights that are on

Placing the THUNDERSTORM switch to "ON" energizes three thunderstorm light relays that route AC power from the 28-volt tap of the four dimming control auto-transformers to the lights through four circuit breakers on the overhead console. The 28-volt main DC bus No. 2 supplies power to the relays and the flight station dome lights (figure 1-67).

Pilots' Standby Compass Light.

An integrally lighted standby compass is provided on the forward center edge of the overhead panel. The light is controlled through a switch in the dimming control labeled FLOOD on the pilot's side of the

overhead console. Rotating the dimming control from "OFF" to the right turns on the pilot's flood lights and the compass light to bright. Further rotation to the right dims the flood lights but not the compass light. The 115-volt emergency AC bus supplies power to the dimming control auto-transformer (figure 1-61). The transformer supplies 28-volt AC power to the compass light and up to 28-volt AC power to the flood lights through a circuit breaker located to the right of the pilot's FLOOD lights dimming control.

Flight Station Dome Lights.

Flight station dome lighting is provided by five dome lights mounted in the flight station overhead trim above the pilot's, copilot's, observer's and navigator's seats and forward flight station passageway. The lights are controlled by a FWD DOME switch located on the INTERIOR LIGHTS panel on the overhead console and a rotary dimming switch labeled DOME located on the copilot's side of the overhead console. The FWD DOME switch controls the three forward dome lights, and the DOME LT dimming control unit controls all the lights if the FWD DOME switch is in the "ON" position. The 115-volt forward main AC bus No. 1 supplies power to the dimming control auto-transformer (figure 1-66). The transformer supplies up to 28 volts AC power to the lights through a circuit breaker located to the left of the DOME dimming switch.

Flight Engineer's Station Lights.

FLIGHT ENGINEER'S INSTRUMENT LIGHTS. The flight engineer's instrument lighting consists of integrally lighted controls and indicators mounted on the panels. The lights are controlled by a rotary dimming control labeled INST on the flight engineer's LIGHTS control panel. The 115-volt forward main AC bus No. 3 supplies power to the dimming control auto-transformer (figure 1-65). The transformer supplies up to 5.4 volts AC power through five circuit breakers located above the INST dimming control.

FLIGHT ENGINEER'S UPPER PANEL LIGHTS. The flight engineer's upper panel lighting consists of embedded panel lights that illuminate the nomenclature markings on the upper panels. The lights are controlled by a rotary dimming control labeled UPPER PNL on the flight engineer's LIGHTS control panel. The 115-volt forward main AC bus No. 3 supplies power to the dimming control auto-transformer (figure 1-65). The transformer supplies up to 5.4 volts AC power to the lights through five circuit breakers located above the UPPER PNL dimming control.

FLIGHT ENGINEER'S LOWER PANEL LIGHTS. The flight engineer's lower panel lighting consists of embedded panel lights that illuminate the nomenclature markings on the lower panels. The lights are controlled by a rotary dimming control labeled LOWER PNL on the flight engineer's LIGHTS control panel. The 115-volt forward main AC bus No. 3 supplies power to the dimming control auto-transformer (figure 1-65). The transformer supplies up to 5.4 volts AC power to the lights through five circuit breakers located above the LOWER PNL dimming control.

FLIGHT ENGINEER'S MAIN CIRCUIT BREAKER PANEL LIGHTS. The main circuit breaker panel lighting is provided by raised plastic lighting strips that illuminate the nomenclature markings on the panels. The lights are controlled by a rotary dimming control labeled MAIN CKT BKR PNL on the flight engineer's LIGHTS control panel. The 115-volt forward main AC bus No. 2 supplies power to the dimming control auto-transformer (figure 1-66). The transformer supplies up to 28-volts AC power to the lights through two circuit breakers located to the right of the MAIN CKT BKR PANEL dimming control.

FLIGHT ENGINEER'S FLOOD, TABLE AND UTILITY LIGHTS. The flight engineer's table and flood lighting is controlled by a rotary dimming control through a circuit breaker and two toggle switches under the FLOOD TABLE & UTILITY portion of the flight engineer's lighting control panel. There are three table lights and twelve flood lights. The toggle switches permit four different lighting combinations. The dimming control auto-transformer receives 115-volt AC power from the forward main AC bus No. 2 (figure 1-66) and provides up to 28 volts AC power to the table and flood lights. The utility light, located on the upper right portion of the console, is controlled by a self-contained dimming control that receives 28-volt AC power from the 28-volt tap on the dimming control auto-transformer through a circuit breaker located above the dimming control.

Navigator's Station Lights.

NAVIGATOR'S INSTRUMENT LIGHTS. The navigator's instrument lighting consists of integrally lighted controls and indicators mounted on the panels. The lights are controlled by a rotary dimming control labeled INSTRUMENT LIGHTS on the navigator's LIGHT CONTROL panel. The dimming control auto-transformer receives 115-volt AC phase A power from the 115-volt AC avionics bus No. 1 (figure 1-69). The transformer supplies up to 5.4 volts AC power to the lights through the two circuit breakers located above the INSTRUMENT LIGHTS dimming control.

NAVIGATOR'S PANEL LIGHTS. The navigator's panel lighting consists of embedded panel lights that illuminate the nomenclature markings on the panels. The lights are controlled by a rotary dimming control labeled PANEL LIGHTS on the navigator's

LIGHT CONTROL panel. The 115-volt AC avionics bus No. 1 supplies power to the dimming control auto-transformer (figure 1-69). The transformer supplies up to 5.4 volts AC power to the lights through five circuit breakers located above the PANEL LIGHTS dimming control.

NAVIGATOR'S FLOOD AND WORKTABLE LIGHTS. The navigator's station lighting is provided by 10 floodlights and five worktable lights. The lights are controlled by a rotary dimming control labeled FLOOD & WORKTABLE on the navigator's LIGHT CONTROL panel, and a switch located above the dimming control. The toggle switch permits selection of three different lighting combinations. The 115-volt avionics AC bus No. 1 supplies power to the dimming control auto-transformer (figure 1-69). The transformer supplies 28-volt AC power to the thunderstorm flood lights through left- and right-hand circuit breakers located above the FLOOD & WORK TABLE switch. During thunderstorm flood light operation, the THUNDERSTORM switch, on the pilots' overhead panel, routes power from the right-hand circuit breaker directly to the flood lights, bypassing the left-hand circuit breaker, the FLOOD & WORK TABLE switch, and the dimming control.

NAVIGATOR'S CIRCUIT BREAKER PANEL LIGHTS. The navigator's circuit breaker panel lighting is provided by raised plastic lighting strips that illuminate the nomenclature markings on the panels. The lights are controlled by a rotary dimming control labeled CKT BKR PANEL LIGHTS on the navigator's LIGHT control panel. The 115-volt avionics AC bus No. 1 supplies power to the dimming control auto-transformer through a circuit breaker on the navigator's No. 1 avionics circuit breaker panel (figure 1-69). The transformer supplies up to 28 volts AC power to the lights through the left circuit breaker located above the dimming control.

NAVIGATOR'S UTILITY LIGHT. Utility lighting is provided by an adjustable utility light mounted on the lower right side of the navigator's panel. The light is controlled by a self-contained rotary dimming control. The 115-volt avionics AC bus No. 1 supplies power to the circuit breaker panel light dimming control auto-transformer (figure 1-69). The transformer supplies 28 volt AC power to the utility light through the right-hand circuit breaker located above the CKT BKR PANEL LIGHTS dimming control.

Relief Crew Area Lights.

RELIEF CREW BUNK DOME LIGHTS. Relief crew bunk dome lighting is provided by two dome lights located in the forward and aft relief crew bunk areas. These lights are controlled by two-position ("ON," "OFF" rocker switches on switchplates located in the forward and aft relief crew bunk areas. Relief crew bunk aisle dome lights are controlled by the FWD DOME switch on the copilot's interior lights panel. The 115-volt forward main AC bus No. 2 supplies power to the relief crew lighting transformer (figure 1-66). The transformer supplies 28-volt AC power to the relief crew bunk area dome lights (figure 1-62).

Note

On 68304, 68307, 70167, 70168, and 70170 through 90025 not modified by T.O. 1475, the reading lights are deactivated.

RELIEF CREW BUNK READING LIGHTS. Six relief crew bunk reading lights are provided, one at the head of each bunk. The lights are controlled by a two-position pushbutton adjacent to the light. The 115-volt forward main AC bus No. 2 supplies power to the relief crew lighting transformer (figure 1-66). The lights (figure 1-62).

RELIEF CREW AREA DOME LIGHTS. Three relief crew dome lights are provided in the overhead along the aisle. The lights are controlled by a two-position rocker switch located above the right forward aisle seat and by a dimming control on the relief crew lighting control panel. The 115-volt aft main AC bus No. 3 supplies power to the dimming control auto-transformer (figure 1-70). The transformer supplies up to 28 volts AC power to the lights through a circuit breaker on the relief crew lighting control panel.

RELIEF CREW COMPARTMENT READING AND TABLE LIGHTS. Seven relief crew compartment reading lights and one table light are provided in the relief crew compartment. The reading lights are controlled by two-position pushbuttons located adjacent to the lights, and the table light is controlled by a two-position switch adjacent to the light. The 115-volt aft main AC bus No. 3 supplies power to the relief crew auxiliary lighting transformer (figure 1-70). The transformer supplies 28 volts AC power to the lights through circuit breakers on the relief crew auxiliary lighting panel.

Note

On 68304, 68307, 70167, 70168, and 70170 through 90025 not modified by T.O. 1475, the reading lights are deactivated.

RELIEF CREW LAVATORY LIGHTS. Two lights are provided in the lavatory. The lights come on whenever the 115-volt aft main AC bus No. 3 is energized. This bus supplies power to the relief crew auxiliary lighting transformer (figure 1-70). The transformer supplies 28 volts AC power to the lights through a circuit breaker on the relief crew auxiliary lighting panel.

Courier Compartment Lights.

COURIER COMPARTMENT DOME LIGHTS. Two dome lights are provided in the courier compartment. The lights are controlled by a two-position rocker switch on a switchplate located at the compartment entrance. The 115-volt aft main AC bus No. 3 supplies power to the dimming switch auto-transformer (figure 1-70). The transformer supplies up to 28-volts AC power to the lights through a circuit breaker on the relief crew lighting control panel.

COURIER COMPARTMENT READING LIGHTS. Eight reading lights are provided in the courier compartment. The lights are controlled by pushbutton switches located adjacent to the lights. The 115-volt aft main AC bus No. 3 supplies power to the lighting transformer located in the AC load center. The transformer supplies 28-volt AC power to the lights (figure 1-70).

Note

On 68304, 68307, 70167, 70168, and 70170 through 90025 not modified by T.O. 1475, the reading lights are deactivated.

Troop Compartment Lights.

TROOP COMPARTMENT AREA LIGHTING. Troop compartment lighting is provided by six overhead lights. These lights are controlled by an aisle light dimming control located on the troop compartment lighting control panel. The 115-volt aft main AC bus No. 4 supplies power to the dimming switch auto-transformer (figure 1-70). The transformer supplies up to 28 volts AC power to the lights through a circuit breaker on the troop compartment lighting control panel.

TROOP COMPARTMENT READING LIGHTS. Seventy-five reading lights are provided in the troop compartment. The lights are controlled by push-button switches located adjacent to the lights. The 115-volt aft main AC bus No. 4 supplies power to the lighting transformers located in the troop compartment. The transformer supplies 28 volt AC power to the lights (figure 1-70).

Note

On 68304, 68307, 70167, 70168, and 70170 through 90025 not modified by T.O. 1475, the reading lights are deactivated.

TROOP COMPARTMENT STAIRWELL ACCESS LIGHT. A troop compartment stairwell access light is provided at the head of the stairwell. This light is controlled by two, two-way TROOP COMPT ACCESS light switches. One is located on the loadmaster's aft control panel and the other is located in the troop compartment on the lighting control panel near the stairwell. Actuating either switch routes 115-volt AC power from the monitor AC bus No. 2 (figure 1-70) to the aft lighting transformer through a PWR XMFR circuit breaker located on the loadmaster's aft control panel. The transformer supplies 28-volt AC power to the light through a circuit breaker located above the switch.

Emergency Exit Lights.

Twelve emergency exit lights are installed in the airplane. One light is installed at each crew door, troop door, emergency exit, and flight crew and troop compartment stairwell entries. The emergency exit lights (figure 1-78) have integral batteries that are charged by airplane electrical power. Since the batteries require approximately 16 hours to become fully charged, but provide only 45 minute of power, the lights should not be turned on for ground testing or non emergency use. With power on the airplane and the EMERG EXIT light switch in the "ARM" position, charging of the batteries can be checked by observing a glowing indicator on the side of the light assembly. The lights are controlled by an EMERG EXIT switch on the pilot's overhead panel (figure 1-76) and two inertial switches.

The EMERG EXIT switch is normally placed to the "ARM" position. With the switch in this position, airplane electrical power failure or a sudden deceleration causes the lights to come on with power from the internal batteries. If the emergency lights are on, due to a sudden deceleration, they can be put out and the lights reset to normal operation by pushing the RESET button on each inertial switch. After power is on the airplane, the lights can be tested and illuminated by placing the switch to "TEST." Placing the switch momentarily to "DISARM" and then to "ARM," causes the lights to go out and then arms them for normal operation. The lights can be made portable by pulling the red release handle. When the handle is pulled, a quick disconnect severs the light's electrical connection to the airplane and the lights remain on. The light may be put out by placing the handle to the stowed position.

The 28-volt main DC bus No. 1 supplies charging and arming power to the lights (figure 1-68). The 28-volt battery bus supplies disarming power to the lights (figure 1-64).

EMERGENCY EXIT LIGHT NORMAL OPERATION. The following information is provided to prevent excessive operation of the emergency exit lights and to assure that the batteries in these lights remain fully charged.

(1) The batteries charge any time power is on the airplane and the EMERG EXIT switch is in the "ARM" or "DISARM" position.

(2) The lights come on and the batteries discharge any time the switch is in the "ARM" position and power is removed from the airplane. In order to extinguish the lights, airplane electrical power must be provided and the EMERG EXIT light switch must be placed to "DISARM".

Cargo Compartment Lights.

CARGO COMPARTMENT OVERHEAD LIGHTS. Cargo compartment overhead lighting is provided by 84 light fixtures mounted in the cargo compartment ceiling. The lights are controlled by an ALL CARGO lights switch spring-loaded to the center position, two, OVHD GROUP (1 and 2) switches and a rotary OVHD GROUP 1 DIMMER dimming control. All of these switches are located on the LH FORWARD LOADMASTER CONTROL PANEL (figure 1-122). Also, a LIGHTS ALL CARGO switch spring-loaded to the "NORMAL" position, and located on the LH AFT LOADMASTER CONTROL panel (figure 1-122), is used to control the cargo compartment lights. In addition, an ALL CARGO LIGHTS rocker switch (spring-loaded to the center position and located on the switch plate on the left side of the flight station entrance), is used to control all cargo lights from the flight station. Placing the ALL CARGO LIGHTS switch momentarily to "ON" energizes two all cargo lights holding relays and two overhead cargo light (group 1 and 2) relays. Three of the relays receive 28-volt DC power from the main DC bus No. 2 (figure 1-67). The group two relays receives 115-volt rectified AC power from the aft main AC bus No. 2 (figure 1-70). These relays route 115-volt AC power from the aft main AC buses No. 2 and 3 to four lighting power transformer (figure 1-70). Placing any one of the above switches momentarily to "OFF" de-energizes the relays and the lights go out.

Placing the OVHD GROUP 1 switch to "ON" energizes the group one overhead cargo light relay. This relay receives 28-volt DC power from the main DC bus No. 2 (figure 1-67). This relay routes 115-volt power from the aft main AC bus No. 3 (figure 1-70) through the two circuit breakers on the cargo lighting relay panel. The transformers supply 28-volt AC power to the 21 forward group one and to the 21 aft group one overhead cargo lights.

The forward group one overhead lights are also controlled by a rotary OVHD GROUP 1 DIMMER control. The dimmer controls the light intensity from "OFF" to full bright when the OVHD GROUP 1 switch is in the "OFF" position.

Placing the OVHD GROUP 2 switch to "ON" energizes the group two overhead cargo light relay. This relay receives 115-volt rectified AC power from the aft No. 2 main AC bus (figure 1-70). This relay routes 115-volt AC power from the aft main bus No. 2 to the forward and aft overhead cargo light group two transformers (figure 1-70). The transformers supply 28-volt AC power to the 21 forward group two and to the 21 aft group two overhead cargo lights.

CARGO COMPARTMENT SIDE LIGHTS. Cargo compartment side lighting is provided by 31 white light fixtures and nine red light fixtures mounted on each side of the cargo compartment.

CARGO COMPARTMENT WHITE SIDE LIGHTS. Cargo compartment white side lighting is provided by 62 white side light fixtures 31 located on each side of the cargo compartment. The lights are controlled by two SIDE GROUP (1 and 2) light switches located on the loadmaster's forward control panel (figure 1-122), and the three ALL CARGO lights switches described in the "Cargo Compartment Overhead Lights" paragraph in this section.

Placing the SIDE GROUP 1 switch to "ON" energizes the group one cargo compartment side lights relay with 115-volt rectified AC power from the aft main AC bus No. 1 (figure 1-70). This relay routes 115-volt AC power from the aft main AC bus No. 1 to the forward and aft side group one cargo lights transformers (figure 1-70). The transformers supply 28-volt AC power from the aft main AC bus No. 1 to the cargo compartment side lights.

Placing the SIDE GROUP 2 switch to "ON" energizes the group two cargo compartment side lights relay with 115-volt rectified AC power from the aft main AC bus No. 1 (figure 1-70). This relay routes 115-volt AC power from the aft main AC bus No. 2 to the group two cargo compartment side lights transformer. The transformer supplies 28-volt AC power to 20 forward and 20 aft group two cargo compartment side lights.

CARGO COMPARTMENT RED SIDE LIGHTS. Cargo compartment red lighting is provided by 18 red light fixtures 9 located on each side of the cargo compartment. The lights are controlled by two, two-way RED light switches, one located on the loadmaster's forward and aft control panels (figure 1-122).

Actuation of either RED light switch energizes a relay on the forward cargo compartment relay panel with 28-volt DC power from the main DC bus No. 2 (figure 1-67). This relay removes all power from the cargo compartment white lights, if on, and energizes the red lights control relay with 115-volt rectified AC power from the aft main AC bus No. 1 (figure 1-70). The red lights control relay routes the same power (not rectified) to the red lights transformers. The transformer supplies 28-volt AC power to the red lights.

CARGO COMPARTMENT CURB LIGHTS. Cargo compartment curb lighting is provided by 76 curb light fixtures installed under the left and right walkways. These lights are controlled by a CURB light switch located on the loadmaster's forward control panel.

WARNING

Do not place any cargo, baggage or equipment directly against a curb light because the intense heat generated by this light may cause a fire.

Placing the switch to "ON" energizes the forward and aft curb light control relays with 115-volt AC power from the aft main bus No. 3 and No. 4 (figure 1-67). The curb light relays route this same power to four curb lights transformers (figure 1-67). The transformers supply 28-volt AC power to the lights.

CARGO RAMP LOADING LIGHTS - FORWARD. Forward cargo ramp lighting is provided by one fixed overhead light and two adjustable side lights.

The fixed light is controlled by a RAMP LOADING OVHD light switch located on the loadmaster's forward control panel (figure 1-122).

Placing the switch to "ON" routes 115-volt AC power from the monitor AC bus No. 2 to the forward lighting transformer through a PWR XMFR circuit breaker on the loadmaster's forward control panel. The transformer supplies 28-volt AC power to the light through a circuit breaker located above the switch.

The adjustable side lights are controlled by a RAMP LOADING SIDE ADJ lights switch located on the loadmaster's forward control panel (figure 1-122).

Placing the switch to "ON" routes 115-volt AC power from the monitor AC bus No. 2 to the forward lighting transformer through a PWR XMFR circuit breaker on the loadmaster's forward control panel (figure 1-122). The transformer supplies 28-volt AC power to the lights through two circuit breakers located above the switch.

CARGO RAMP LOADING LIGHTS - AFT. Aft cargo ramp lighting is provided by two fixed overhead ramp loading lights and two adjustable side loading lights.

The fixed lights are controlled by a RAMP LOADING OVHD lights switch located on the loadmaster's aft control panel (figure 1-122).

Placing the switch to "ON" routes 115-volt AC power from the monitor AC bus No. 3 (figure 1-70) to the aft lighting transformer through a PWR XMFR circuit breaker on the loadmaster's aft control panel. The transformer supplies power to the lights through two circuit breakers located above the switch.

The adjustable side ramp loading lights are controlled by a RAMP LOADING SIDE lights switch located on the loadmaster's aft control panel (figure 1-122).

Placing the switch to "ON" routes 115-volt AC power from the monitor AC bus No. 2 to the aft lighting transformer through a PWR XMFR circuit breaker on the loadmaster's aft control panel. The transformer supplies power to the lights through two circuit breakers located above the switch.

JUMP PLATFORM LIGHTS. Jump platform lighting is provided by a light at the bottom of each troop door. The lights are controlled by a two-position JUMP PLATFORM switch located on the LH AFT LOADMASTER CONTROL panel (figure 1-122).

Placing the switch to "ON" supplies 115-volt AC power from the monitor AC bus No. 2 (figure 1-122) to the aft lighting transformer through a PWR XMFR circuit breaker on the LH AFT LOADMASTER CONTROL panel. The transformer supplies 28-volt AC power to the jump platform lights through a circuit breaker located above the switch.

Vertical Stabilizer Access Area and Interior Service Lights.

Four vertical stabilizer access area and eight stabilizer interior service lights are provided for inspection and maintenance activities. These lights are controlled by two, two-way switches. One switch is located in the troop compartment to the right of the access area door, and the other is located in the access area to the right of fuselage pressure vent access. The AC monitor bus No. 3 supplies 115-volt AC power to the empennage service light power transformer (figure 1-70). The transformer which is located in the empennage service light power box, supplies 28-volt AC power through a circuit breaker located on the power box.

Avionics Equipment Compartment Service Lights.

Two stationary and two portable service lights are installed in the avionics equipment compartment. The lights are controlled by a rocker switch located on a switch plate near the access door. The forward main AC bus No. 2 supplies 115-volt AC power to the relief crew lighting transformer (figure 1-66). The transformer supplies 28-volt AC power to the lights (figure 1-62).

Environmental Equipment Compartment Service Lights.

Three service lights are installed in the environmental equipment compartment. These lights are controlled by a switch located on a switch plate near the access door. The aft main AC bus No. 3 supplies 115-volt AC power to a lighting transformer (figure 1-70). The transformer supplies 28-volt AC power to the lights (figure 1-70).

INSTRUMENTS.

The following paragraphs cover pitot-static operated instruments, electrically operated instruments, and self powered instruments.

PITOT STATIC SYSTEM.

The pitot-static system consists of four electrically anti-iced pitot-static tubes, two on each side of the forward fuselage, with related pitot and static pressure tubing (figure 1-79). The system provides pitot and/or static air pressure for the operation of the central air data computer, navigators altimeter and airspeed indicator, and madar recorder transducers, variable feel unit, cabin differential pressure indicator, and cabin pressure control box.

PITOT STATIC OPERATED INSTRUMENTS.

Navigator's Altimeter.

The navigator's altimeter, located on the navigator's console is a standard barometric altimeter and operates on static pressure from the upper right and lower left pitot static tubes.

Navigator's Airspeed Indicator.

The navigator's airspeed indicator, located on the navigator's console, is of the standard type and operates on pitot pressure from the lower left pitot static tube and static pressure from the upper right and lower left pitot static tubes. The maximum allowable Mach marker and maximum allowable airspeed pointer are inoperative.

Cabin Altimeter and Differential Pressure Indicator.

A combined cabin altimeter and differential pressure indicator, located on the flight engineer's console (figure 1-21), operates on static pressure from the upper left and lower right pitot static tubes. For more detailed information on this indicator, refer to the Pressurization System Indicators in this section.

NAVIGATOR'S TRUE AIRSPEED INDICATOR.

The navigator's true airspeed indicator, located on the navigator's console utilizes signals from the No. 1 or No. 2 CADC, as selected on the CADC selector switch (figure 1-80). The indicator receives 26-volt AC power from the AC nav bus No. 2 (figure 1-69).

NAVIGATOR'S VERTICAL VELOCITY INDICATOR.

The navigator's vertical velocity indicator, located on the navigator's console is an electrically operated, remote-indicating instrument which operates on signals from the No. 2 CADC. The indicator receives 115-volt AC power from the AC avionics bus No. 1 (figure 1-69).

TOTAL AIR TEMPERATURE INDICATORS.

Two total air temperature indicators are provided. One is located on the copilot's instrument panel (figure 1-11), and the other is located on the flight engineer's console. Each indicator displays the total air temperature in degrees centigrade. There are two dual anti-iced, total temperature probes, one located on either side of the forward fuselage (figure 1-29). The left-hand probe supplies inputs to the No. 1 CADC and to the energy management analog computer (EMAC) panel on the navigator's console. The right-hand probe supplies inputs to the No. 2 CADC and to the flight engineer's total temperature indicator. The copilot's total temperature indicator receives 115-volt AC power inputs directly from the navigator's EMAC computer. The flight engineer's indicator receives 115-volt AC power from the forward main AC bus No. 1 (figure 1-66).

SELF-POWERED INSTRUMENTS.

Accelerometer.

The accelerometer, located on the pilot's instrument panel (figure 1-9), is a self-contained unit requiring no external connection. The dial is calibrated in "g" units from -2 to +4 "g's." The instrument contains three pointers. One gives continuous indications. Two auxiliary pointers indicate and maintain maximum plus and minus accelerations until they are reset, using the reset knob on the front of the instrument.

Magnetic Compass.

A magnetic standby compass is mounted on a bracket at the top center of the windshield. A compass correction card is located on the aft side of each control column.

Clocks.

Spring-wound, eight-day clocks are located on the pilot's and copilot's instrument panels (figures 1-9 and 1-11), the navigator's console and the flight engineer's console. A sweep second hand and a minute totalizer are provided, both controlled by successive depressions of a ("START," "STOP," "RESET") knob on the upper right corner.

AVIONICS EQUIPMENT COOLING SYSTEM.

The avionics equipment cooling system uses two fans rated at approximately 850 CFM that operate in conjunction with a flow control valve. These fans cool the avionics equipment in the avionic compartment on the left side of the airplane at the forward end of the relief crew compartment. The avionics equipment compartment, except for three filtered cooling air inlets, is sealed off from the rest of the upper deck compartments.

Note

The avionics compartment doors should be closed at all times when cooling fans are operating so that air drawn into the compartments will be filtered. Dust laden air will clog equipment cooling ducts and cause premature equipment failure.

The MADAR equipment and circuit breaker panels behind the flight engineer's panel are cooled by a 525 CFM fan.

Fan failure indications are provided by warning lights on the flight engineer's instrument panel.

One of the avionics equipment cooling fans and the MADAR cooling fan begin operating whenever the airplane electrical system is energized and continues to operate during ground or flight operation. In the event the No. 1 or No. 2 operating fan fails, the other fan is started automatically. The MADAR and circuit breaker panel cooling fan receives power directly from the 115-volt forward main AC bus No. 3 (figure 1-62).

During ground operation, the flow control valve is held to the full open position by a spring. In flight, the valve is forced towards the close position by air pressure differential and flow across the valve. To prevent loss of equipment cooling should the valve fail in a closed position, the valve is designed to open to a position that is sufficient for the cooling airflow required at a cabin differential pressure of 8.2 PSI.

AVIONICS EQUIPMENT COOLING SYSTEM CONTROLS.

Avionics Cooling Fans Select Switch.

A two position AVION FANS switch is on the flight engineer's panel (figure 1-35). In either position, the selected fan operates as soon as the airplane electrican system is energized. The "1" position routes 28-volt main DC bus No. 1 power to a control relay (figure 1-68). When energized, this relay routes 115-volt forward main AC bus No. 2 power to the No. 1 cooling fan (figure 1-62). The "2" position routes 28-volt main DC bus No. 2 power to a control relay (figure 1-67). When energized, This relay routes 115-volt forward main AC bus No. 3 power to the No. 2 cooling fan (figure 1-62).

AVIONICS EQUIPMENT COOLING SYSTEM INDICATORS.

Cooling Fan Fail Lights.

Failures of the No. 1 and No. 2 cooling fans are monitored by a FAIL 1 and a FAIL 2 light on the flight engineer's panel (figure 1-35). The FAIL 1 and 2 lights receive power from the 28-volt main DC bus No. 2 (figure 1-67).

Failure of the MADAR cooling fan is monitored by the PANEL FAN FAIL light on the flight engineer's panel (figure 1-35). The PANEL FAN FAIL light receives power from the 28-volt main DC bus No. 2 (figure 1-67).

Avionics Equipment Compartment Overheat Light.

An overheat or low airflow condition in the avionics equipment compartment is monitored by the COMPT OVHT light on the flight engineer's panel (figure 1-35). A cooling effects detector installed upstream of the cooling fans is a hot wire device that is sensitive to airflow as well as temperature. The detector sends a signal to the COMPT OVHT light if an overheat or low airflow condition exists in the compartment. The detector routes 28-volt main DC bus No. 2 power to the light (figure 1-67).

COMMUNICATION SYSTEMS.

The communications equipment installed in this airplane consists of the intercommunications systems, the public address system, UHF and VHF command radios, a VHF/FM radio and the HF liaison radios. For electronic equipment locations, see figure 1-81. For antenna locations, see figure 1-82.

FLIGHT STATION INTERCOMMUNICATION SYSTEM.

The flight station intercommunication system provides facilities for voice communication between the flight station, rest areas, troop and cargo compartments. It also provides intercommunication between the flight station and service receptacles; and switching and mixing controls for tie-ins with the communications and navigation systems.

The pilot's and flight engineer's interphone panels receive emergency 28-volt DC power (figure 1-61).

The copilot's, observer's, navigator's, and the avionces equipment bay interphone panels receive 28-volt avionics DC bus No. 2 power (figure 1-69).

Cockpit Loudspeakers.

Two cockpit loudspeakers are provided, one located above the pilot and the other above the copilot. The cockpit loudspeakers are controlled by a two-position switch mounted on the flight station trim by each loudspeaker. The speakers are connected in parallel with the pilot's and copilot's headset and monitor the communications selected on the interphone panels. Transmissions generated by the pilot or copilot will be heard at the station not making the transmissions. Transmissions made by using the call function on the interphone system will be heard on the cockpit loudspeakers regardless of the position of the loudspeakers switch.

Microphone Switches.

A three-position interphone switch (figure 1-44) is located on the pilot's and copilot's control wheel. The switches are spring returned to the center position. When the switch is held to "INPH" the pilot or copilot can transmit to other intercom stations, regardless of the position of his control panel selector switch. When the switch is held to "MIC," the operator can transmit through the communication system selected on the intercom panel by the transmission selector switch. An interphone button is located on the hub of the nose gear steering wheel and is used by the pilot when he is steering the airplane. This button works in the same manner as the "INPH" position of the control wheel switch. All flight station intercom positions, except the pilot's and copilot's, have microphone switches integral with the headset cord. The pilot and copilot are each provided with a hand held microphone located on their respective side consoles. The microphone has a switch on it that energizes the radio transmitter selected at the pilot's or copilot's main intercom panel. The navigator's and flight engineer's stations have foot operated, floor mounted switches wired in parallel with the headset cord switches.

Microphone and Headset Extension Cords.

Extension cords for the pilot's and copilot's headsets are provided at the side consoles. No operating controls are on these cords. The observer, flight enginneer, navigator and the avionics equipment area are also provided with headset and microphone extension cords. These cords have a jack that incorporates a microphone switch. Two additional extension cords with switches are provided as part of an instructor kit. When connected, they are in parallel with the navigator's and flight engineer's extension cords.

Intercommunication Control Panels.

Six intercommunication control panels (figure 1-84) are installed in the airplane. These panels are located at the pilot's, copilot's, observer's, navigator's, flight engineer's stations and in the avionics equipment bays. Controls on each panel consist of monitor switch controls, a rotary selector switch, volume control knob, hot microphone TALK and LISTEN push-pull switches and a call button. The HF and VHF-FM radio sets are not wired to the flight engineer's main control panel. The HF radio sets are not wired to the avionics equipment bay main control panel.

MONITOR SWITCH VOLUME CONTROLS. These switches are two-position (pull on, push off) switches. When a switch ha- been pulled (ON), it can be rotated to set the volume level of the audio system being monitored. The push-pull switches provide monitoring capability of the following communications equipment:

UHF Command Radio No. 1
UHF Command Radio No. 2
HF Liaison Radio No. 1
HF Liaison Radio No. 2
VHF Command Radio No. 1
VHF Command Radio No. 2

Switches are provided for intercom, (INT), and hot microphone (HOT MIC). The hot microphone system uses two switches (LISTEN, TALK).

SELECTOR SWITCH. The rotary selector switch on the six control panels can be set to the following positions for transmission:

I-	Interphone
U1-	UHF Command Radio No. 1
U2-	UHF Command Radio No. 2
H1-	HF Liaison Radio No. 1
H2-	HF Liaison Radio No. 2
V1-	VHF Command Radio No. 1
V2-	VHF Command Radio No. 2
V-FM-	VHF-FM Radio Set

The selector switch connects the desired transmitter, bypasses the switch on the monitor control and connects the associated receiver. The flight engineer's control panel is not wired for the H_1, H_2, or V-FM positions.

HOT MICROPHONE (HOT MIC) SWITCHES. The hot microphone switches permit direct transmission on the hot interphone system without pressing the normal interphone (INPH) switch. Direct transmissions can be heard at any interphone station that has the LISTEN switch pulled out.

Two push-pull switches (LISTEN, TALK), on the control panel operate the hot microphone mode of operation. The hot mike function may be monitored by pulling out the LISTEN switch.

When the hot microphone mode of operation is not desired, the microphone LISTEN and TALK switches should be pushed in (OFF).

CALL BUTTON. A CALL button is located on each of the interphone panels. Depressing this button causes the interphone signal from the station initiating the call to be heard at the other stations regardless of the position of the selector switches, monitor switches, or volume controls on those panels.

VOLUME CONTROL. A rotary volume (VOL) control varies the users headset volume and affects all incoming signals equally; but does not vary the volume of transmissions.

Intercom Monitor Panels.

Five intercom monitor panels (figure 1-84) are located at the pilot, copilot, observer, navigator and avionics equipment bays. These panels allow monitoring of navigation receivers and the CDPIR. Push-pull (ON-OFF) switches on the panel provide monitoring of the following navigation systems:

TACAN 1-	TACAN No. 1
TACAN 2-	TACAN No. 2
VHF NAV 1-	VHF Navigation No. 1
VHF NAV 2-	VHF Navigation No. 2
ADF-1-	Automatic Direction Finder
ADF-2-	Automatic Direction Finder
MKR BCN-	Marker Beacon Receiver

The panel also has a switch for monitoring the CDPIR. The switch is wired only at the observer's position. The ADF receivers are not wired in the avionics equipment bay monitor panel.

The desired system is selected by pulling the proper control switch (ON). Volume is controlled by rotating the switch.

Note

The CDPIR voice recorder monitors the headset audio signals/microphone inputs of the pilot, copilot, flight engineer, observer, and audio inputs to the area microphone. The recorder can be monitored at the observer's station for test purposes.

Auxiliary Intercom Monitor Panels.

Five auxiliary intercom monitor panels (figure 1-84) are located at the pilot, copilot, observer, navigator, and avionic equipment rack stations. These panels allow monitoring of communication facilities that the main and monitor panels cannot handle. Push-pull (ON-OFF) switches on the panel provide monitoring of the following communication and navigation equipment:

PA-	Public Address System
RV BCN-	Rendezvous Radar Beacon
VHF-FM-	VHF-FM Communications Radio

Navigator's Alternate Air Drop Intercom Facility.

A two-position INTERPHONE switch (figure 1-84) on the navigator's ADS panel provides the navigator with a continuous talk feature on the normal interphone system. Placing the switch to "MIC ON" provides continuous intercom transmission for the navigator until the switch is placed to "NORM".

INTERCOMPARTMENT INTERCOMMUNICATION SYSTEM.

The intercompartment intercommunication system provides intercom facilities for crew members or other personnel who have inflight duties, but are not involved with the airplane flight progress enroute to its destination.

Fourteen interphone plug-in receptacles are provided (figure 1-85). One is located in the relief crew area, two in the troop compartment, two in the vertical stabilizer, six in the cargo compartment, one in each wheel pod, and one in the nose radome.

This system has its own intercom amplifier located in the avionics equipment area. This system receives 28-volt DC power from the avionics DC bus No. 2 (figure 1-69).

WINCH CONTROL/SERVICE INTERCOM SYSTEM.

The winch control/service intercom system provides remote facilities for use during loading and maintenance operations.

On airplanes modified by T.O. 1305, the system consists of five remote control intercom units and one remote winch control grip assembly.

On airplanes not modified by T.O. 1305, the system consists of four remote control intercom units and one remote intercom and winch control unit.

The system has its own intercom amplifier located in the avionics equipment area and receives 28-volt DC power from the avionics DC bus No. 2 (figure 1-69).

Remote Control Intercom Units.

On airplanes modified by T.O. 1305, five remote control intercom units are provided and stowed in the airplane (figure 1-85).

On airplanes not modified by T.O. 1305, four remote control intercom units and one remote intercom and winch control unit are provided and stowed in the airplane (figure 1-85).

These units provide remote control from 14 plug-in receptacles located on the airplane. A lanyard attached to the unit is worn around the neck of the operator. Plugging in the extension cord provided for each unit into any one of the 14 receptacles allows the operator to establish intercommunications with other remote control units and the flight station. The remote control unit provides freedom of movement while talking over the intercom system or public address systems.

On airplanes modified by T.O. 1305, the remote winch control grip assembly (figure 1-85) has two winch control switches.

On airplanes not modified by T.O. 1305, the remote intercom and winch control unit (figure 1-84) has all the features of the remote control intercom units and also has three winch control switches located on the forward face of the unit.

The remote winch controls are described under the Cargo winch paragraph in this section. This unit may be plugged into any of the fourteen interphone receptacles and is used in the same manner as the remote control intercom units. The unit may also be used to control the cargo winch when it is plugged into the interphone receptacle on either side of the center cargo compartment, either receptacle in the vertical stabilizer, the receptacle in either wheel pod or the receptacle in the nose radome.

The remote control intercom units have three spring-loaded push-button switches located on top of the unit and two volume controls located on the bottom left and right sides, and are described as follows:

INTERPHONE SWITCH. Depressing the INPH switch connects the operators microphone to the intercom system.

CALL SWITCH. Depressing the CALL switch connects the operators microphone to the intercom system, energizes the call control relays and transfers the interphone system amplifier line to the flight station "call" line. The "call" line is intended for emergency use.

PUBLIC ADDRESS SWITCH. Depressing the PA switch energizes the PA control relays, and transfers the intercompartment and winch control/service interphone line to the PA system input. Intercommunication between the other crew members in the flight station is not interrupted.

HEADSET VOLUME CONTROL. The HEADSET VOLUME control located on the bottom right side of the unit turns on the power ("PWR ON") and controls the volume of the operator's headset.

PUBLIC ADDRESS VOLUME CONTROL. The PA VOLUME control controls the PA system sound level and affects each compartment equally. The control is effective only when the PA switch is depressed.

Interphone Cable Retractor Assembly.

A removable interphone cable retractor assembly (figure 1-85) is installed in the cargo compartment. The retractor assembly stores 85 feet of interphone extension cord. The retractor assembly may be stowed at the center of either side of the cargo compartment at the option of the operator.

CABLE RETRACTOR OPERATION. To operate the cable retractor properly, accomplish the following:

1. To extend the cable, grasp the cable, and walk away from the retractor.

2. When the desired length of cable is extended, set the ratchet to relieve cable tension.

3. When walking toward the retractor, release the ratchet and follow the cable as it retracts to prevent snagging of the cable.

4. When stowing the remote intercom unit, with it attached to the retractor, set the ratchet of the cable retractor to provide slack in the intercom unit cable.

PUBLIC ADDRESS SYSTEM (AN/AIC-13).

The public address system provides one-way communication with the rest areas, cargo compartment, and loading areas adjacent to the airplane through 26 loudspeakers. Fourteen of these 26 speakers are installed in the cargo compartment only as a part of the paratroop jump kit. The public address control panel (figure 1-86) is located on the pilot's center console. Four other area PA control panels (figure 1-86) are located in the areas they control. These areas are: the forward crew rest area, the troop compartment, the forward end of the cargo compartment and the aft end of the cargo compartment. The troop compartment area panel is located on the aft left-hand side of the troop compartment and the cargo compartment area panels are located at the forward and aft ends of the cargo compartment on the left-hand side. Announcements may be made by utilizing the flight station intercom, the intercompartment intercom, or the winch control/service intercom systems.

Public Address System Main Panel.

Controls for the public address system are mounted on the PA system main panel (figure 1-86). Controls consist of an intercom transfer switch, a bunk speaker switch and a volume control knob and are described as follows:

INTERCOM TRANSFER SWITCH. The intercom transfer switch is a three-position switch. The switch is left in the "NORMAL" position during regular intercom activity. Placing the switch to "PILOT" or "CO-PILOT" transfers that operator's intercom activity to the PA system. Normal intercom activity is still possible between the other crew members in the flight station. The PA system receives 28-volt avionics DC bus No. 1 power (figure 1-69).

The following remote control units and extension cords are stowed at the following locations:

Number of Units	Length of Extension Cord	Location
1 Remote Intercom	5 feet	Relief Crew Rest Area Forward Compartment
1 Remote Intercom	5 feet	Troop Compartment
1 Remote Intercom	175 feet	Forward Left-Hand Cargo Compartment
	25 feet	Forward Right-Hand Cargo Compartment
1 Remote Winch Control Grip Assembly with 85 feet of cord △1		Left- or Right-Hand Center Cargo Compartment
1 Remote Intercom	50 feet	Aft Left-Hand Cargo Compartment
1 Extension Cord	25 feet	Aft Right-Hand Cargo Compartment
1 Remote Intercom/ Winch Control △1		Left-Hand Center Cargo Compartment
1 Removable Interphone Cable Retractor Assembly △2	85 feet	Left- or Right-Hand Center Cargo Compartment.

NOTE

△1 On airplanes modified by T.O. 1305.

△1 On airplanes not modified by T.O. 1305.

△2 The 85-foot chord is furnished on a cable retractor. The retractor assembly may be stowed at the center of either side of the cargo compartment at the option of the operator.

BUNK SPEAKER SWITCH. The BUNK SPEAKER switch is a two-position switch. Placing the switch to "OFF" disconnects the bunk speakers allowing the crew members in the bunk areas to remain undisturbed during routine announcements.

VOLUME CONTROL. The VOL control is a rotary control that adjusts the PA system volume and affects each compartment equally.

Public Address System Auxiliary Panels.

Controls on the four auxiliary PA panels (figure 1-86) are identical but control different groups of speakers in the airplane.

The auxiliary panel in the forward relief crew area controls the bunk speakers and the relief crew area speakers. The auxiliary panel in the forward cargo compartment controls the forward ramp speakers, or the forward and center cargo compartment speakers. The auxiliary panel in the aft cargo compartment controls the aft ramp speakers or the aft and center cargo compartment speakers.

The public address system auxiliary panels contain the following controls:

POWER SWITCH. The PA auxiliary panel power switch is a two-position switch. Placing the switch to "PWR-ON" routes 28-volt power to the applicable PA system amplifiers.

SPEAKER SELECTOR SWITCH. The forward relief crew area speaker selector switch is inactive. Control of the bunk speakers is exercised by the main control panel.

The forward and aft cargo compartment speaker selector switches are three-position rotary switches. The "CARGO" position on the forward cargo compartment speaker selector switch controls the forward and center cargo compartment speakers.

Note

The center cargo compartment speakers are installed only as a part of the paratroop jump kit.

The same position on the aft cargo compartment speaker selector switch controls the aft and center cargo compartment speakers. The "RAMP" position on the forward cargo compartment speaker selector switch controls the forward ramp speakers. The same position on the aft cargo compartment speaker selector switch controls the aft ramp speakers. The "OFF" position on both switches turn off power to their respective cargo compartment and ramp speakers.

VOLUME CONTROL. The volume control is a rotary switch that adjusts the volume of those groups of speakers controlled by their applicable control panels.

MIXER SWITCHES. Five mixer switches are provided on the panel. These switches are not active.

Public Address System Operation.

The PA system is put into operation by selecting "I" with the selector switch on the main intercom panel, selecting "PILOT" or "COPILOT" with the intercom transfer switch on the main control panel, and depressing the "MIC" switch on the pilot's or copilot's control wheel, or by depressing the "MIC" switch on the hand microphone. The PA control panel switch must be "ON" and volume controlled.

Troop Compartment PA System.

On 90005 and up and airplanes modified by T.O. 503, an amplifier, and an auxiliary PA panel are installed on the left side of the troop compartment near the stair ladder. A microphone and a PA control-amplifier are installed on the right side of the troop compartment near the stair ladder. The PA panel controls only the loudspeakers in the troop compartment. When the power switch is placed to "PWR ON," the amplifier is turned on. Placing the power switch to the unmarked OFF position turns off the amplifier.

Control of the troop compartment loudspeakers is transferred to the flight station whenever the intercom switch on the PUBLIC ADDRESS system panel is in the "PILOT" or "COPILOT" position and the pilot's or copilot's microphone is keyed.

On 68307, 70167, 70168 and 70170 through 90004 not modified by T.O. 503, the troop compartment PA system is installed as a mission kit. An amplifier and an auxiliary PA control panel are installed on the left side of the troop compartment near the stair ladder. The two-position selector switch should remain in the "ON" position to monitor PA announcements. Placing the selector switch to "OFF" will remove audio power from the speakers.

UHF COMMAND RADIO.

Dual UHF communications systems are installed in the airplane. Each system operates in a frequency range of 225 to 399.95 MHz for airplane-to-airplane or airplane-to-ground communications. Controls and indicators for the UHF systems (figure 1-87) are located on the center console.

Note

Simultaneous operation of both UHF command radio systems on certain discrete frequencies may result in interference in one or both receivers. If such interference is encountered, manually selecting "TOP" antenna for one system and "BOT" antenna for the other system will remove the interference.

The UHF No. 1 system receives 28-volt DC power from the avionics isolated DC bus and 115-volt AC power from the avionics isolated AC bus (figure 1-69). The No. 2 system receives 28-volt DC power from the No. 2 avionics DC bus and 115-volt AC power from the No. 2 avionics AC bus (figure 1-69).

UHF Command Radio Controls.

The UHF panels contain the controls for operating the UHF radios. These controls are described as follows:

MODE SELECTOR SWITCH. The MODE selector switch turns on the radio and selects the type of operation. When the switch is rotated to "MAIN," the main receiver and transmitter are turned on. Rotating the switch to "BOTH" turns on the main receiver and transmitter and the guard receiver is turned on to monitor the guard frequency. The "ADF" position is inoperative since direction finding equipment is not installed.

FREQUENCY SELECTOR MODE SWITCH. The frequency selector mode switch selects the method of controlling the frequency of the main receiver and transmitter. The "PRESET" position allows selection of twenty preset channels with the rotary CHAN switch. The "GUARD" position (straight up) automatically tunes the transmitter and main receiver to the guard frequency. The "MANUAL" position allows frequency selection with four linear actuator thumb switches. The selected frequency is displayed on the counters immediately above the switches.

CHANNEL SELECTOR SWITCH. The channel selector switch allows selection of 20 preset channels which are displayed in the CHAN selector counter immediately above the selector switch.

PRESET CHANNEL MEMORY PUSHBUTTON. The PUSH SET CHAN memory pushbutton is used to change the preset frequencies in the transmitter and main receiver. Placing the frequency selector switch to "PRESET," rotating the channel selector switch to the channel number to be changed, rotating the manual frequency thumb wheels to the desired frequency and pushing the PUSH SET CHAN button erases the present frequency and replaces it with the one selected.

VOLUME CONTROL KNOB. The rotary VOL control knob controls the audio output level of the receiver.

TONE PUSHBUTTON. The spring-returned TONE pushbutton switch is used to produce a tone-modulated transmitter signal.

SQUELCH CONTROL SWITCH. A two-position switch opens the squelch circuit in the radio receiver when the switch is placed to "SQUELCH DISABLE," allowing ambient noise to be heard, assuring receiver operation. Placing the switch to "NORMAL" returns the receiver to its normal squelch level.

UHF Command Radio Indicators.

The UHF panels contain the indicators for the channels and frequencies selected.

CHANNEL COUNTER. The channel counter visually displays the 20 channels as selected by the channel selector switch.

FREQUENCY COUNTERS. The frequency counters display the frequencies selected by the thumbwheels.

UHF Command Radio Antennas.

Two antennas are used with each UHF radio system. Either of the antennas may be connected to the transceivers. Each UHF radio set can be switched to either of two antennas (one each on the top and bottom of the fuselage) by a UHF switch located on the ANTENNA SELECT panels (figure 1-88). Placing the switch to "TOP" or "BOT" manually switches the associated antenna to the transceiver. Placing the switch to "AUTO" allows the antenna selector unit to switch automatically from one antenna to the other to maintain the best reception.

UHF Frequency Card Holders.

A spring-loaded, hinged, UHF frequency card holder is attached to the underside of the pilot's and copilot's glareshield. A card with UHF frequencies may be inserted in the holder that is stowed flat against the underside of the glareshield. Pulling down and aft on the holder brings the frequency card into view.

VHF COMMAND RADIO.

Two complete VHF communications systems are installed in the airplane. Both systems operate independently and can be used simultaneously. Each system provides operation in the frequency range of 116.00 to 149.95 MHz. Controls for the VHF transceivers are located on the center console (figure 1-89). The VHF No. 1 receives power from the avionics isolated DC bus (figure 1-69). The VHF No. 2 receives power from the avionics DC bus No. 2 (figure 1-69).

VHF Command Radio Controls.

The VHF COMM/VHF NAV panels contain the controls for operating the VHF radios. These controls are described as follows:

POWER SWITCH. The left-hand outer rotary control knob turns on the radio. In the "OFF" position, the transceiver is turned off. When the switch is rotated to "PWR," the transceiver is turned on.

VOLUME KNOB. The outer rotary VOL knob adjusts the audio output of the communication receivers.

TEST SWITCH. The TEST switch is used to open automatic squelch circuits on the VHF communication radio. Placing the switch to "COMM" disables the squelch circuit on the VHF COMM radio. The presence of ambient noise assures receiver operation.

FREQUENCY SELECTOR KNOBS. The left two, inner, rotary, frequency selector knobs select the frequency desired. The frequency selector is graduated in 25-KHz increments; however, the system is wired for 50KHz step tuning. Any time the thousandths digit selector is set to 5(.XX5), the set is automatically tuned to the next lower 50 KHz frequency channel.

VHF Command Radio Indicators.

The VHF COMM portion of the VHF panels contains the indicators for monitoring the frequency selected. These indicators are digital counters.

VHF Command Radio Antennas.

One antenna is used with each VHF radio system. Either of the antennas may be connected to the transceivers. The VHF antenna connections may be switched

by using the two-position VHF switch on the pilot's ANTENNA SELECTOR panel (figure 1-88). The "NORM" position connects the bottom forward antenna to the VHF No. 1 transceiver, and the top aft antenna to the VHF No. 2 transceiver. Placing the switch to the "REVERSE" position connects the top aft antenna to the VHF No. 1 transceiver and the bottom forward antenna to the VHF No. 2 transceiver. To accomplish this antenna switching, 28-volt avionics DC bus No. 2 power is supplied to the antenna switching control through the "REVERSE" position of the switch (figure 1-69).

VHF-FM RADIO.

A short-range, air-to-ground VHF-FM communications system is installed in the airplane. The system operates in the 30.00 to 75.95 MHz range, and has 920 channels spaced 50 KHz apart. Due to antenna design, optimum reception transmission is in the fore and aft quadrants. The VHF-FM radio controls are on the copilot's side console (figure 1-90). The VHF-FM radio receives 28-volt DC power from the avionics DC bus No. 1 (figure 1-69).

VHF-FM Radio Controls.

FREQUENCY SELECTOR KNOBS. Four, rotary frequency selector knobs are used to select the desired radio frequencies.

SQUELCH CONTROL SWITCH. The SQUELCH switch is used to select the receiver squelch mode. Normally the switch is rotated to the "CARR" position. The switch is momentarily rotated to "DIS" to open the squelch circuit and allow ambient noise to be heard. This noise assures that the set is operating.

VOLUME CONTROL KNOB. A rotary VOL control knob is used to control the audio output level of the receiver.

POWER SWITCH. The power switch supplies power to the radio and coupler when the switch is rotated to the "T/R" position. Rotating the switch to "OFF" turns off the radio. The spring-loaded "TUNE" position may be used to tune the coupler, without selecting VHF-FM on the intercommunications control panel.

VHF-FM Indicators.

FREQUENCY INDICATORS. Four, single digit frequency counters are located directly above their respective frequency selector switches. The right-hand indicator displays only the "0" or "5" digit. The left-hand indicator displays "3" through "7." The other two indicators display digits from "0" through "9".

TUNE LIGHT. The tune light comes on to indicate that the antenna coupler is not tuned to the radio set. The light stays on until the antenna coupler is tuned by keying the set or by selecting "TUNE" on the power switch. Failure of the set or the coupler to tune causes the light to remain on.

TUNE TONE. Selection of a new operating frequency will cause an audio tuning tone to be heard through the interphone while the receiver-transmitter is tuning.

VHF-FM Radio Normal Operation.

To place the VHF-FM radio in operation proceed as follows:

1. Radio Set Operation Frequency - SET

Note

The VHF-FM set may not tune to the selected frequency between 30 and 32 MHz. If this problem is encountered, change to an alternate frequency outside of the frequency band.

2. Power Switch - T/R
3. Squelch Control Switch - DIS

Check that ambient noise is heard to assure that the set is operating.

4. Antenna Coupler - TUNED

If the tune light does not come on, rotate any one of the frequency selector knobs a few digits off the selected operating frequency and back again. The light should come on. Tune in the antenna coupler by keying the set or selecting "TUNE" on the power switch until the light goes off.

5. Squelch Control Switch - CARR

Ambient noise should diminish indicating that the squelch circuit is closed.

HF LIAISON RADIO.

Two identical radio transceivers provide two way voice in the 2 to 30 MHz frequency range. Each set is capable of single side band or amplitude modulation. The HF radios receive 115-volt avionics AC bus No. 1 and 2 power (figure 1-69).

Note

Due to the internal wiring and location of relays, when one power amplifier coupler or entire couplifier is removed from the airplane, the remaining HF/SSB system is inoperative.

HF Liaison Radio Controls.

MODE SELECTOR SWITCH. A five position ("OFF", "SSB", "AME", "FSK", "CW") switch (figure 1-91) controls the various modes of operation. The positions are described as follows:

"OFF" - Removes all power to the radio.

"SSB" (single sideband, upper sideband) - Concentrates more power into the sideband and suppresses the carrier.

"AME" (amplitude modulated equivalent) - The upper sideband and carrier are used to provide a signal which is the equivalent of an AM signal.

"FSK" (frequency shift keying) - This position is not wired for operation.

"CW" (continuous wave) - This position is not wired for operation.

RF GAIN KNOB. The RF GAIN knob (figure 1-91) is used to adjust receiver RF gain. This control is normally left in the full CW (maximum gain) position unless the audio in the headset is distorted. Adjustment in the CCW direction may reduce the distortion. In SSB mode, the audio volume may be adjusted with the RF GAIN knob, leaving the VOLUME knob fully clockwise. In the AME mode, rotate the RF GAIN knob fully clockwise and adjust audio volume with the VOLUME knob.

NOISE BLANK KNOB. The rotary NOISE BLANK knob is normally left in the full CCW (off) position. When noise, characterized by being of a repetitive nature (pulse-type), such as ground vehicle ignition or some forms of ECM is heard, the control is turned slowly CW until the noise is no longer heard. If this action has no effect, the control is returned to the full CCW position.

SQUELCH KNOB. When the SQUELCH knob is in its full CW (maximum position, all signals, including atmospheric and radio generated noise, will be heard.) The control is normally adjusted from full CW toward CCW until the selected stations cannot be heard. It is then turned CW until the selected station can be heard. This procedure should be repeated if the same station is used for an extended period of time.

VOLUME KNOB. When operating in the AME mode, the VOLUME knob should be adjusted so that the received signal on HF is the same as other equipment using the same intercom set. When operating in the SSB mode, rotate the VOLUME knob fully CW.

FREQUENCY SELECTOR KNOBS. Six rotary frequency selector knobs are used for selecting the desired operating frequency on the HF radios.

HF Liaison Radio Normal Operation.

When the desired frequency is selected on the control panel, receiver circuitry is automatically set up. The initial keying of the transmitter, after a frequency change, initiates a 1.5-second tuning sequence of the couplifier. During this time an audio tune tone is heard through the interphone. The set is then ready for operation.

WARNING

Before the radios are used for transmission or tuning operation, ensure that personnel are cleared of the aft fuselage compartment and the vicinity of the antenna. Contact with this equipment during transmission can result in an RF burn.

Note

When both HF systems are tuned to approximately the same frequency, the operation of either transmitter may cause the alternate system to reprogram for retune. When this occurs, the alternate system will go through a tune cycle when keyed even though it has previously tuned to the selected frequency.

Note

The transmitter should not be keyed continuously for more than five minutes and should remain in receive mode an equal time.

IFF (APX-64).

An AN/APX-64(V) radar identification system provides automatic radar identification of the airplane when interrogated by radar sets. The system enables friendly airplanes to identify themselves apart from other friendly airplanes and provides a means of transmitting a special coded signal known as an emergency reply. The system receives, detects, decodes, encodes, and transmits signals. It recognizes a mode 4 interrogation and transmits a reply on airplanes with a mode 4 computer installed.

An automatic altitude reporting function of the transponder, using CADC altitude inputs, automatically transmits this altitude when interrogated.

The system also provides an interphone tie-in and a UHF tie-in. The interphone tie-in circumvents the interphone selector switch to furnish a direct audio signal to the pilots whenever a MODE 4 interrogation and reply is being made. The UHF tie-in activates the IFF system's I/P circuits when the transmitter of either UHF is keyed.

Visual indications are also provided for monitoring system condition. One indicator REPLY light on the IFF panel indicates that a MODE 4 reply is being made and an IFF annunciator light on the pilot's annunciator panel comes on to indicate that no reply was made to a MODE 4 interrogation.

The system receives 28-volt DC power from the avionics isolated DC bus and the emergency DC bus and 115-volt AC power from the emergency AC bus (figure 1-61 and A, figure 1-69).

IFF Controls.

Operation and control of the system is accomplished with the controls on the IFF panel (figure 1-92). Their function is described as follows:

MASTER SWITCH. The master selector switch (7) is used to select the desired system operating conditions. In "STBY" (standby), operating power is supplied and the system is ready for immediate operation when the MASTER switch is set to "LOW" (low sensitivity) or "NORM" (normal sensitivity). However, when in "STBY," the absence of replies when interrogated in Mode 4 causes the IFF annunciator to come on and an audio signal to be generated. When the MASTER switch is set to "EMER" (emergency), the system transmits an emergency reply when interrogated.

IDENT-OUT-MIC SWITCH. An identification switch (10) controls the identification function. When the switch is set to "IDENT," and the MODE 1 through MODE 3/A coder group selector control has a code set in, the system generates coded replies for MODES 1 through 3/A. MODE C and 4 are not affected. The switch is spring-returned to the "OUT" position from the "IDENT" position. When the "MIC" position is selected, control of the identification function is transferred to the keying function of the UHF radio set.

MODE 1 ENABLE AND TEST SWITCH. The M1 (2) switch enables Mode 1 when in the center (ON) position. When placed in the "TEST" position, Mode 1 self-test for "go" or "no go" is initiated. The TEST light (5) comes on to indicate the status of Mode 1. The "TEST" position is spring-loaded to return to the center (ON) position.

MODE 2 ENABLE AND TEST SWITCH. This switch (4) is the same as the MODE 1 switch and performs functionally for MODE 2 in the same manner as MODE 1.

MODE 3/A ENABLE AND TEST SWITCH. This switch (6) is the same as the MODE 1 switch and performs functionally for MODE 3/A in the same manner as MODE 1.

MODE C ALTITUDE REPORTING ENABLE AND TEST SWITCH. This switch (8) is the same as the MODE 1 switch and performs functionally for MODE C in the same manner as MODE 1, except that it controls and tests the altitude reporting mode.

MODE 4 ENABLE SWITCH. The mode 4 enable switch (13) is provided for control of the MODE 4 operation.

MODE 4 INDICATION SWITCH. The mode 4 indication switch (14) is provided for control of the MODE 4 indication. The "AUDIO" position enables both the visual and audio reply indication. The "OUT" position disables the MODE 4 indication function of the system. When the switch is placed to "LIGHT," only the visual indication is enabled.

MODE 4 INDICATION FUNCTION SWITCH. The mode 4 indication function switch (1) is provided for control of Mode 4 operation. The "HOLD" position is spring-loaded for momentary contact to permit return to the "A" position when manual pressure is released. To move to the "ZERO" position, the switch must be pulled up and rotated.

RADIATION-TEST-MONITOR ENABLE SWITCH. The radiation-test-monitor enable switch (9) is provided for control of the monitor and radiation-test functions of the system.

Note

The "RAD TEST" position of the switch is inoperative.

This position is spring-loaded for momentary contact and returns to the "OUT" position when released from the "RAD TEST" position. When placed to the "MONITOR" position, the monitor circuits of the "go-no-go" airborne transponder inflight tester are enabled, and the lights come on when a reply is made to interrogations on any mode.

MODE 1 CODE SELECTORS. These selectors (12) consists of two in-line edgewise-mounted thumb wheels which select the MODE 1 codes, and are continuously rotatable with no stops, allowing code selections from "00" thru "73".

MODE 3/A CODE SELECTORS. These code selectors (11) consist of 4 thumb wheel switches that allow selection of Mode 3/A code groups from "0000" through "7777".

IFF Indicators.

MODE RELAY SELF-TEST LIGHT. A green TEST light (5) is provided to indicate satisfactory operation of the transponder for self test of Modes 1, 2, 3/A, and C, and for monitoring proper response to any interrogation.

MODE 4 REPLY LIGHT. A green light (3) is provided for indication of MODE 4 replies that occur when the MODE 4 indication switch is either in the "AUDIO" or "LIGHT" position.

IFF WARNING LIGHT. On airplanes with a mode 4 computer installed, an IFF warning light (figure 1-128) comes on to warn the pilots that they have been interrogated but have not replied.

IFF Self Test.

On 90005 and up and airplanes modified by T.O. 1440, a self-test of the IFF can be accomplished as follows:

1. Place the M-1, M-2, M-3A, M-C, and RAD TEST-MON switches to "OUT."

2. Place the MASTER switch to "NORM."

3. Hold the M-1 switch in the "TEST" position. The mode reply self-test light should illuminate steadily.

4. Release the M-1 switch. The mode reply self-test light should go out.

5. Place the M-1 switch to "OUT."

6. Repeat steps 3, 4, and 5 using the M-2, M-3/A, and M-C switches.

Note

Failure of the self-test light to come on while any mode switch is held in the "TEST" position indicates a malfunction in that particular mode.

7. Place the MASTER switch to "STBY."

IFF Normal Operation.

To place the IFF in operation, proceed as follows:

1. Set the MASTER switch on the IFF panel as directed.

2. Select the desired modes of operation (M1, M2, M3/A and M1C).

3. Set in the desired code with the code selectors or mode enable switches.

4. On airplanes with a mode 4 computer installed, set up MODE 4 in accordance with T.O. 12P4-2APX-64-2.

To select a code manually proceed as follows:

1. Select the desired modes of operation (M1, M2, M3/A and M1C).

2. Set in the desired code with the code selector controls on the control panel for modes M1 and M3/A. Mode 2 codes have to be set up on the front of the receiver/transmitter unit.

IFF Emergency Operation.

1. To place the IFF in emergency operation, pull up on the MASTER switch and rotate to the "EMER" position.

2. To turn the IFF system off, rotate the MASTER switch to the "OFF" position.

NAVIGATION SYSTEMS.

VHF NAVIGATION SYSTEMS.

Two VHF navigation receivers are installed in the airplane. Each receiver is capable of receiving VHF omni-range (VOR) navigation signals and localizer (LOC) signals for instrument landing system (ILS) approaches. The VOR information may be selected for display on a bearing distance heading indicator (BDHI) and the horizontal situation indicator (HSI). The No. 1 VOR supplies navigation signals to the pilot's HSI and the navigator's No. 1 BDHI. The No. 2 system supplies signals to the copilot's HSI and the navigator's No. 2 BDHI. Both VOR systems supply signals to the pilot's and copilot's BDHI. The No. 1 or No. 2 system is selectable by the pilot and copilot by means of the BDHI selector panel. VOR course information is also supplied to the FDS. The FDS, in turn, computes steering information to a VOR radial selected on the HSI course select knob. This steering information is then displayed on the attitude director indicator (ADI). VOR/LOC deviation signals are also supplied to the automatic flight controls for lateral axis control.

The VHF navigation system No. 1 receives 28-volt DC power from the avionics isolated DC bus and 26-volt AC power from the 26-volt isolated AC bus (figure 1-69). The VHF navigation system No. 2 receives 28-volt DC power from the No. 2 avionics DC bus and 26-volt AC power from the 26-volt No. 2 navigation bus (figure 1-69).

VHF Navigation System Controls.

The VHF navigation receiver controls are located on the right side of the control panel which contains the controls for both the VHF communication and VHF navigation radios. The panels for both the No. 1 and No. 2 systems are located on the center console (figure 1-89).

OFF-POWER SWITCH. The left-hand outer knob serves as the on-off power switch for the navigation receiver.

VOLUME CONTROL. The right-hand outer knob serves as a volume control for the navigation receiver.

TEST SWITCH. The TEST actuates the built-in self-test function of the navigation receiver. Correct VOR system operation is indicated if the bearing pointer drives to 180 degrees when the test switch is held in the "NAV" position.

If the receiver is tuned to an ILS frequency, correct system operation is indicated by the appearance of the course warning flag on the HSI and the flight director warning flag on the ADI.

Note

The self-test function is operative only while external VOR or ILS signals are being received.

FREQUENCY SELECTOR. The inner knob of the two concentrically mounted controls function as frequency selector switches. The left-hand control selects one-MHz increments of frequency while the right-hand control selects 50-KHz increments. However, the system is wired for 100 KHz step tuning. Any time the hundredths digit selector is set to 5 (.X5), the set is automatically tuned to the next lower 100 KHz frequency channel.

VHF Navigation System Indicators.

The frequency indicator above the frequency selector knobs display the frequency selected.

VHF Navigation System Operation.

WARNING

Selection of the IMU for HAMS displays will leave the VOR bearings referenced to their associated AHRU. The VOR displays will be in error if their associated AHRU is in error. Even though the VOR displays are in error, the course deviation indictor on the HSI can be utilized for an ILS approach because it displays only basic ILS signal deviations.

GLIDESLOPE SYSTEMS.

Two glideslope receivers are installed in the airplane. Operation of the glideslope is controlled by the VHF navigation control panel. When an ILS frequency is selected on the panel, the glideslope receiver is tuned and automatically switches to the appropriate glideslope frequency which is paired with the selected localizer frequency.

Glideslope deviation signals are supplied to the Flight Director System for use during ILS operation and to the Automatic Flight Control System for use during automatic approaches and landings.

The No. 1 glideslope system receives DC power from the 28-volt avionics isolated DC bus and AC power from the 26-volt AC isolated bus (figure 1-69). The No. 2 glideslope system receives DC power from the 28-volt avionics DC bus No. 2 and AC power from the 26-volt navigation bus No. 2 (figure 1-69).

For a description of mode selection and glideslope displays, refer to the Navigation Mode Selection and Flight Director Systems paragraphs in this section.

TACAN SYSTEMS.

Two independently operating TACAN navigation systems are installed in the airplane. Each system provides a continuous indication of bearing and distance to a selected TACAN surface beacon located within line-of-sight distance of 300 nautical miles.

The TACAN bearing and distance information is visually presented on bearing distance heading indicators (BDHI) on the pilot's, copilot's, and navigator's instrument panels; and on the horizontal situation indicator (HSI) on the pilot's and copilot's instrument panels. TACAN information is also supplied to the flight director systems for use in computing steering information which is then displayed on the attitude director indicator (ADI). Selection of TACAN information for visual presentation on these indicators is made through the BDHI switches on the pilot's and copilot's instrument panels and through flight director system (navigation selector) switches on the pilot's and copilot's glareshield. The presentation of TACAN information through these switches is covered under the "BDHI Systems" and "Flight Director System" headings in this section. Information from both TACAN systems is displayed on the BDHI's.

The No. 1 TACAN system receives DC power from the 28-volt avionics DC bus No. 1, and AC power from the 26-volt and 115-volt AC navigation bus No. 1 (figure 1-69). The No. 2 TACAN system receives DC power from the 28-volt avionics DC bus No. 2, and AC power from the 26-volt and 115-volt AC navigation bus No. 2 (figure 1-69).

TACAN System Antennas.

Each TACAN system uses two antennas. One antenna is located on top of the airplane and the other on the bottom (figure 1-82). A switch on the control panel permits selection of either top or bottom antenna, as desired. An automatic position of this switch allows for automatic selection of the top or bottom antenna as necessary to maintain usable signal reception as the airplane attitude changes.

TACAN System Controls.

The TACAN panels (figure 1-93) on the center console, contain the controls for the TACAN systems.

MODE SWITCH. The mode switch is used to select the X or Y group of frequency channels. The X mode is the standard mode of operation and contains 126 channels. The Y mode provides 126 additional channels for planned TACAN overseas expansion.

CHANNEL SELECTOR KNOBS. Two channel selector knobs are rotated to select any one of the 126 channels. The left-hand knob selects the hundreds and tens digits and the right-hand knob selects the unit digits.

ANTENNA SELECTOR SWITCH. The antenna selector switch provides manual selection of either top or bottom TACAN antenna as desired for best system operation. The center position of the switch places the antenna switch in automatic mode. In this mode, automatic selection is based on an acceptable signal level. If the signal received on one antenna becomes unusable, the other antenna is switched to the R/T, provided its signal is sufficient for good reception. If neither antenna provides a usable signal, the selector cycles from one antenna to the other until one of the antennas provides a signal level sufficient for a reliable operation. Once either antenna is selected, no further switching occurs unless the signal from the selected antenna drops below the acceptable level.

Note

Because the lower antenna provides adequate coverage for normal airborne operations, the antenna selector switch should be placed in the "BOT" position for flight and the "TOP" position for ground use.

VOLUME KNOB. The rotary VOL knob is used to adjust the receiver volume to the desired level.

FUNCTION SELECTOR SWITCH. The function selector switch is used to turn the set on and to select either the receive or the transmit-receive modes. In the receive mode, only bearing information is available. In the transmit-receive mode, both bearing and distance information are available. Three transmit-receive positions are provided: "200" miles, "300" miles and "70" miles. These positions limit the range for which distance information is provided.

TEST PUSHBUTTON. A TEST pushbutton is used to test the TACAN system. See "TACAN Systems Test Procedures," this section, for description of TEST switch operation.

TACAN System Indicators.

CHANNEL INDICATOR. A three-digit channel display indicator is located on the top center of the TACAN panels and displays selected TACAN channels from "01" to "126."

GO/NO-GO LIGHTS. A GO light located on the left side and a NO GO light located on the right side of the function selector switch indicates the condition of the TACAN system when the TEST pushbutton is depressed. See "TACAN Systems Test Procedure," this section, for description of the lights.

TACAN Systems Test Procedure.

To test the TACAN Systems, accomplish the following:

1. Rotate the function selector switch to "300."

Note

Normal warmup time is 90 seconds.

2. Select any channel that cannot be received in the area where the test is being accomplished.

3. Depress the TEST pushbutton. Depressing the TEST pushbutton causes the GO and NO GO lights to come on. Releasing the pushbutton causes both lights to go out, all TACAN bearing pointers being tested to drive to "0" (±2) degrees, and the range displays to drive to "000" (±0.5) miles. This action takes place within approximately 15 seconds. If the system is good, the GO light comes on and remains on for approximately 10 seconds and then goes out. If the system is malfunctioning, the NO GO light comes on approximately 10 seconds before the end of the test and remains on until the system is turned off. A tone is present at the radio audio output and is heard during the test cycle.

The NO GO light may come on for short periods during the test cycle. This does not indicate a malfunction unless the light remains on during the last 10 seconds of the test cycle.

Note

The NO GO light also comes on any time a system malfunction occurs.

TACAN System Normal Operation.

To place the TACAN systems into normal operation, accomplish the following:

1. Rotate the function selector switch to "300."

Note

Normal warmup time is 90 seconds.

2. Place the ANT switch to the "TOP" position.

For best overall TACAN performance, place the TACAN ANT switch to "TOP" for ground operation and to "BOT" for inflight operation.

3. Set in the desired surface beacon channel with the channel selector knobs.

4. If the airplane is in an area where it is possible to receive more than one TACAN station, rotate the function selector switch to "70" or "200" as necessary.

5. Set BDHI system instrument selection switches to the desired position for presentation of TACAN information. The selection switch positions are fully covered in the "BDHI System" paragraph in this section.

6. Set the navigation selector switches to the desired position for TACAN information display on HSI and ADI indicators. The selector switch positions are fully covered in the "Flight Director System" paragraph in this section.

WARNING

Selection of the IMU for HAMS displays will leave the TACAN bearings referenced to their associated AHRU. The TACAN displays will be in error if their associated AHRU is in error.

7. To turn the TACAN system off, rotate the function selector switch to "OFF."

TACAN System Alternate Operation.

If satisfactory distance and bearing indications are not received on a particular channel, switch to another station located within range. If satisfactory distance and bearing indications are received on this channel, return to the original channel. If the original channel now indicates satisfactorily, the faulty indication may have been due to a temporary obstruction between the airplane and the surface beacon. If the original channel remains inoperative, select an alternate channel or employ other navigation methods.

The distance function of the desired station may be inoperative while the bearing function remains operable. In this case, satisfactory bearing information can be obtained by placing the function switch in the "REC" position.

ADF SYSTEMS.

Two separate ADF systems (ADF No. 1 and ADF No. 2) are installed in the airplane. Each system receives signals from radio range stations, broadcast stations, and low frequency navigation aid stations in the 190 to 1750 KHz frequency range. Each system provides both automatic and manual direction finding capability in addition to receiving radio broadcast or course-orientated radio range signals. Aural monitoring of the ADF systems is accomplished through selector switches on the interphone panels (figure 1-84). Controls for the two ADF systems are located on the ADF panels (figure 1-94) on the center console.

The ADF No. 1 receives DC power from the 28-volt avionics DC bus No. 1, and AC power from the 26-volt AC navigation bus No. 1 (figure 1-69). The ADF No. 2 receives DC power from the 28-volt avionics DC bus No. 2, and AC power from the 26-volt AC navigation bus No. 2 (figure 1-69).

ADF System Controls.

ADF FUNCTION SELECTOR SWITCH. The outer control of the dual concentric GAIN/ADF function selector switch is a four-position switch. Rotating the switch from the "OFF" to the "ADF" position selects the automatic direction finding function of the system. The antenna system automatically locates the null position of the selected station and displays the radio bearing to the station on the BDHI system pointers. The "ADF" selection on the switch is generally used to direct the airplane to a homing station or for position finding by triangulation between two or more stations. When the "ANT" position is selected, the ADF functions as an ordinary radio receiver and is used primarily for radio broadcast reception or receiving course oriented radio range signals. When the "LOOP" position is selected, manual location of the antenna null position using the LOOP switch on the control panel is provided.

GAIN (VOLUME) KNOB. The inner control of the dual concentric GAIN/ADF function selector switch is the ADF system volume control.

LOOP SWITCH. The LOOP switch is used to find the null positions of the antenna during periods of extreme interference. With the function selector switch in the "LOOP" position, rotation of the LOOP switch to the left ("L") or right ("R") will locate either one of the two nulls located 180 degrees apart. Accurate location of the null can be found by monitoring the tuning indicator, while rotating the LOOP switch, until minimum deflection of the needle occurs. The airplane radio bearing to the station is displayed on the BDHI indicators.

MODE/TEST SWITCH. The mode/test switch is used to select the proper mode for reception of either voice or CW signals and to initiate the self-test cycle to check the operational status of the equipment. To initiate a system check, the desired system is selected, the system audio is monitored over the intercom system, and the mode/test switch is held in the TEST position. The receiver is tuned to a 100-KC increment until a zero-beat signal is heard in the intercom system. The relative bearing will indicate 0(±2) degrees if the system is operating properly.

FREQUENCY BAND SELECTOR SWITCH. The outer control of the dual concentric TUNE frequency band selector switch is a three-position switch that determines the frequency band selection of the receiver. When the switch is rotated to any one of those positions, the appropriate frequency band will be displayed in the FREQUENCY display window.

TUNING KNOB. The inner control of the dual concentric TUNE/frequency selector switch is a rotary tuning knob. When rotated, the TUNE knob positions the selected frequency under the index mark on the FREQUENCY display window. Exact station tuning is indicated by maximum needle deflection of the tuning indicator needle.

ADF System Indicators.

FREQUENCY DISPLAY WINDOW. The FREQUENCY display window on each ADF panel displays the frequency as selected with the frequency band selector switch.

FREQUENCY TUNING INDICATOR. The frequency tuning indicator is used to find the minimum and maximum receiver signal strength while seeking a null with the LOOP switch or tuning in a frequency with the TUNE knob.

MARKER BEACON RECEIVER.

The marker beacon receiver provides aural and visual indication when the airplane is in range of a marker beacon transmitter. Visual indication is provided by indicator lights on the pilot's and copilot's instrument panels (figures 1-9 and 1-11). The colored lights are: white (A) for airways markers, blue (O) for ILS outer markers and amber (I) for ILS middle markers. Aural signals are received through the intercom system when the MKR BCN switch on the intercom monitor panel (figure 1-84) is pulled out. Some Category II airports have an inner marker installation that signals a point at which the airplane is at a designated decision height on the glide path between the middle marker and the landing threshold. With such an installation, the airway marker signals the inner marker beacon position.

Note

The signal from the ILS middle marker, located approximately 3,500 feet from the end of the runway, is indicated on the amber (I) light. The signal from the ILS inner marker, at some Category II airports, is indicated on the white (A) airway marker light.

The marker beacon receives DC power from the 28-volt avionics DC bus No. 2 (figure 1-69).

Marker Beacon Receiver Controls.

MARKER BEACON SENSITIVITY SWITCH. A three-position sensitivity/test switch is located below the pilot's marker beacon lights (figure 1-9). This switch provides selection of either high or low receiver sensitivity and also initiates the built-in self-test cycle to determine the operational status of the system. The self-test is accomplished by holding the switch in the "TEST" position while monitoring the marker beacon audio through the intercom system and observing that the marker beacon lights come on. Correct system operation is indicated by the lights coming on in the following sequence accompanied by the indicated audio tone:

(1) Lamp O; 400 Hz tone

(2) Lamp I; 1,300 Hz tone

(3) Lamp A; 3,000 Hz tone

LONG RANGE NAVIGATION (LORAN).

The LORAN system provides continual time difference readouts of two LORAN master/slave station combinations. A digital output of the time differences is also supplied to the primary digital navigation computer for coordinate conversion and position up-date. The visual time difference readouts, displayed on the indicator control, can be converted to a position fix with the aid of an Air/Surface LORAN-C Navigation Chart.

The LORAN C system receives 28-volt DC power from the avionics DC bus No. 1 (figure 1-69).

LORAN Controls and Indicators.

The LORAN C controls, time difference indicator and alarm lights are located on the front of the LORAN control panel (figure 1-95).

The description and function of these controls and indicators is contained in the following paragraphs:

FUNCTION SELECTOR SWITCH. The five position function selector switch serves as an on-off switch and also selects the mode of operation while data is being programmed during initial set-up. Selection of the "PRR" position allows the operator to enter the pulse repetition rate of the LORAN chain to be received. The PRR is selected by setting the two PRR/MODE selector thumbwheels to the desired value. The "ATD and BTD" positions allow the operator to enter the approximate master/slave A and master/slave B time differences for the airplane position. These values are selected on the two PRESET TD thumbwheels. The TRACK position is used to place the equipment in operation and to track the LORAN-C ground stations after all necessary data has been programmed into the receiver.

PRR/MODE SWITCHES. The PRR/MODE switches are two 10-position thumbwheel selectors. These switches are used to select the pulse repetition rate of the LORAN chain to be received. The left-hand switch is used to select one of the five basic rates, and the right-hand switch selects one of the eight specific rates. In addition to selecting PRR, these switches serve to select system operation with the envelope servo on or off as required by operating conditions and to operate in skywave or groundwave track. The left-hand switch is positioned to "ENV" or "SKY" and the right-hand switch is positioned to "ON" or "OFF."

The left thumbwheel selector presents the following displays:

(1) L - L Basic PRR

(2) S - S Basic PRR

(3) SL - SL Basic PRR

(4) SH - SH Basic PRR

(5) SS - SS Basic PRR

(6) ENV - Envelope

(7) SKY - Skywave Track

(8) Blank - Not Used

(9) Blank - Not Used

(10) TST - Receiver Self-Test

The right thumbwheel selector presents the following displays:

(1) 0 - 0 Specific PRR

(2) 1 - 1 Specific PRR

(3) 2 - 2 Specific PRR

(4) 3 - 3 Specific PRR

(5) 4 - 4 Specific PRR

(6) 5 - 5 Specific PRR

(7) 6 - 6 Specific PRR

(8) 7 - 7 Specific PRR

(9) OFF - Envelope or Skywave Track OFF

(10) ON - Envelope or Skywave Track ON

DISPLAY TEST PUSHBUTTON. The DISPLAY TEST pushbutton is depressed for a test of the control unit.

PRESET TD SELECTOR SWITCHES. The two 10-position PRESET TD thumbwheel selectors are used to program the approximate master/slave A and master/slave B time delay as a whole number in thousands of microseconds. The left selector is used to preset the time difference in 10K-microsecond increments from "0" to "9". The right selector is used to preset the time difference in 1K-microsecond increments from "0" to "9".

INITIATE PUSHBUTTON. The INITIATE pushbutton is depressed to program the selected function (PRR, ATD, BTD and TRACK). In addition, it initiates the envelope servo, skywave mode and resets the BAD DATA alarm.

DIM READOUT KNOB. The DIM READOUT knob is used to vary the intensity of the TIME DIFF-MICRO-SEC readout display and alarm lamps.

TIME DIFFERENCE - MICROSECOND DISPLAY INDICATOR. The TIME DIFFERENCE MICROSECOND display indicator alternately displays the master/slave A and master/slave B time difference for the airplane position.

TD HOLD PUSHBUTTON. The time difference readout displays will stop alternating when the TD HOLD pushbutton is depressed. By depressing it again, the set will go back to alternating the master/slave time difference.

ANNUNCIATOR ALARM LIGHTS. The following ten annunciator alarm indicator lights indicate the condition or status of the incoming signal, receiver and transmitter.

NO GO. The NO GO light indicates either of two conditions:

(1) A malfunction in the receiver.

(2) The light comes on while the tape program is being run. If a tape error is detected, the alarm will remain on.

BAD DATA. The BAD DATA light indicates either of two conditions:

(1) The light comes on if the wrong information has been entered (i.e., PRR, ATD, BTD, and time difference relationship).

Note

The operator should check his inputs to be sure that they are correct and then re-enter the parameters.

(2) The light comes on to indicate the end of a search operation with no signal capture. The BAD DATA alarm is reset by depressing the INITIATE pushbutton.

NEXT STEP. The NEXT STEP light indicates either of two conditions:

(1) During programming it indicates that the receiver is ready for the next input parameter.

(2) During signal tracking it indicates that, for the master signal, the receiver is tracking a skywave and has detected the presence of a ground wave.

SEARCH. The SEARCH light indicates that the receiver is in the search operation.

ANTI-JAM. The ANTI-JAM light indicates that the receiver has detected synchronous interference and has initiated action to reduce the effects.

The following alarms pertain to the signal which is identified by the time difference identifier: OVERLOAD, LOST SIGNAL, GW AVAIL, ENVL ERROR, and XMTR ERROR. For example: If slave "B" has an envelope error, the ENVL ERROR light comes on only during the "B" time difference readout. If slave "A" has an envelope error, the ENVL ERROR light comes on only during the "A" time difference readout. If the ENVL ERROR light is on during both "A" and "B" time difference readouts, both "A" and "B" have an envelope error or the master signal has an envelope error.

OVERLOAD. The OVERLOAD light indicates that the receiver is receiving a signal of sufficient amplitude to saturate the amplifiers.

LOST SIGNAL. The LOST SIGNAL light indicates that the signal is of insufficient amplitude for tracking.

ENVELOPE ERROR. The ENVL ERROR light indicates that the receiver is not locked on to the proper phase crossover. Therefore, the time difference readout(s) may be in error.

GROUND WAVE AVAILABILITY. The GW AVAIL light indicates that, for the selected signal (Slave A, Slave B, or both), the receiver is tracking a skywave and has detected the presence of a ground wave.

TRANSMITTER ERROR. The XMTR ERROR light indicates that the receiver detects an error in the received signal. This warns the operator that the system is temporarily unuseable.

Loran Skywave - Groundwave Operation.

The Loran receiver normally operates in a skywave-off mode in which the groundwave is tracked, regardless of the presence of a skywave. This mode is selected automatically by the receiver, unless the operator has previously selected the skywave-on (SKY-ON) mode.

Groundwave operation is recommended since a groundwave is a more stable signal and provides more accurate operation.

In actual operation the groundwave-skywave conditions may overlap. The following paragraphs will explain the above modes and the various signal conditions that could exist.

SKYWAVE-OFF MODE OF OPERATION. At the end of the search mode of operation the receiver will automatically position itself on the groundwave if both a groundwave and skywave is present.

There are four possible conditions in the skywave-off mode:

(1) No skywave present - The receiver searches, acquires, and locks on to the groundwave. The GW AVAIL or NEXT STEP alarm will not light.

(2) Groundwave stronger than skywave - The receiver will search and lock-on to the ground wave. The GW AVAIL or NEXT STEP alarm will not light.

(3) Skywave stronger than groundwave, groundwave amplitude is detectable - The receiver will initially search and lock-on the skywave. Then the strobes will automatically switch to the correct groundwave lockon point. The GW AVAIL or NEXT STEP alarm will light momentarily as the strobes switch from skywave to groundwave.

(4) Skywave stronger than groundwave, groundwave amplitude is not detectable - The receiver will initially search, lock-on, and track the skywave until a groundwave is detectable. When a groundwave is detected the GW AVAIL or NEXT STEP alarm will light momentarily as the strobes switch from skywave to groundwave.

Note that the skywave-off description can apply independently to Master and slaves A and B. The GW AVAIL alarm lights independently for A and B, with the NEXT STEP alarm, indicating a groundwave is available for the Master in the track mode.

If operation is from skywave signals and automatic re-acquisition to groundwave signals, when available, is not desired, the skywave-on mode must be initiated prior to illumination of the GW AVAIL or NEXT STEP alarm.

SKYWAVE-ON MODE OF OPERATION. This mode of operation is selectable by the operator and is intended for use outside the primary coverage area where skywaves are generally expected to be much stronger than groundwaves, or where groundwaves are not detectable. To obtain the skywave-on mode, SKY-ON is selected with the PRR/MODE thumbwheels followed by depression of the INITIATE pushbutton. When operating in this mode there are three signal conditions which could result, either during initial lock-on, or during tracking operations. The three conditions are described in the following paragraphs.

(1) Skywave present, no groundwave - the receiver will search and lock-on the skywave. The GW AVAIL or NEXT STEP alarm will not light.

(2) Skywave stronger than groundwave, groundwave amplitude is detectable - the receiver will search and lock-on the skywave. Following skywave lock-on the receiver will detect the presence of a groundwave and the GW AVAIL alarm lights will come on. There will be no automatic switching to the groundwave since the receiver is in the skywave-on mode. The receiver will remain on the skywave until the sky wave-off mode is initiated.

(3) Groundwave stronger than skywave - the receiver will search and lock-on to the groundwave. There will be no GW AVAIL or NEXT STEP alarm.

If initial skywave lock-on took place in an area where the skywave was stronger than the groundwave and the aircraft moves into an area where the groundwave is stronger than the skywave there will be no automatic switching to the groundwave since the receiver is in the skywave-on mode.

If the receiver is locked on to the groundwave the receiver will not switch to the skywave as the skywave becomes stronger than the groundwave. This type of operation can only be achieved by reacquiring the signal and allowing the receiver to lock-on to the skywave.

ENVELOPE ERROR ALARM. When operating at extreme distances from LORAN ground stations or in high ambient noise, the ENV ERROR alarm light may come on for lengthy periods of time as a result of marginal signal-to-noise conditions. The alarm light will go off when normal operating conditions are again established and no corrective action on the part of the operator is required. Usually, if normal operation precedes such an alarm, no error in time difference reading will occur.

ENV ERROR alarms caused by cycle slips (deviation from correct tracking point) can be corrected by selecting ENV-ON with the PRR mode selector switches and depressing the INIATE pushbutton. Following this procedure, the correct track point should be reestablished and the alarm light extinguished within a maximum of 3 to 5 minutes.

On 70170 through 80214 not modified by T.O. 761, the LORAN receiver may exhibit random envelope error alarms which do not fall into either category explained above. These alarms usually do not respond to operator corrective action.

Automatic Loran Fixing Limitations.

Automatic IDNE Fixing cannot be used when one or more of the following alarm lights are illuminated:

OVERLOAD	BAD DATA
LOST SIGNAL	ENVL ERROR
NO GO	XMTR ERROR

When one or more of these alarm lights are illuminated and IDNE Automatic Fixing is initiated, the LORAN invalid light and FIX REJECT light on the IDNE panels will come on within approximately 20 seconds.

Note

If the skywave-on mode has been initiated by the operator, automatic IDNE Fixing cannot be used. If the skywave-off mode is desired, after the skywave-on ("SKY-ON") mode has been initiated, the operator selects "SKY-OFF" with the PRR/MODE thumbwheels then depresses the INITIATE pushbutton.

LORAN Operating Characteristics.

Because of unique LORAN operating characteristics imposed on the Southeast Asia LORAN chain, C-5A LORAN sets tracking this chain will display a continuously illuminated ENV ERROR alarm light and will in most cases indicate time difference readings which are in error by 5 microseconds. This is a result of the ground stations, and no corrective action by the LORAN operator is possible.

INERTIAL DOPPLER NAVIGATION EQUIPMENT (IDNE).

The inertial Doppler Equipment is a self-contained navigational aid that provides accurate navigation and position determination anywhere on the earth in any weather without the aid of ground-based equipment.

The IDNE provides this navigational capability through the function of four primary navigating modes. These modes are selected in the following order:

Doppler-Dampened Inertial
Free Inertial
Doppler Dead Reckoning
Air Data Dead Reckoning

The IDNE also performs vertical navigation, navigation to the computed air release point (CARP), navigation to the runway during the radar-approach-to-landing mode, LORAN coordinate conversion, and computations for celestial navigation fixing (figure 1-96).

Present position information in the IDNE is updated by introducing fix information from the multi-mode radar, TACAN, or LORAN. Position fix data may also be manually set into the IDNE by using visual reference or celestial data.

The IDNE mode below Air Data DR is the No Nav mode. The No Nav mode condition could occur when the IDNE is operating in the Doppler DR or Air Data DR mode. The IDNE will operate correctly only when it has a valid azimuth and velocity input. It must have these two inputs at all times and in all modes of operation. These inputs are derived as follows:

MODE	AZIMUTH	VELOCITY
INERTIAL	IMU	IMU
INERTIAL DOPPLER	IMU	IMU
DOPPLER DR	⚠AHRU 1 with AHRU 2 as backup	DOPPLER
AIR DATA DR	⚠AHRU 1 with AHRU 2 as backup	CADC 1 with PRI computer CADC 2 with AUX computer

⚠ With PRI selected. If AUX is selected AHRU 2 is priority AHRU with AHRU 1 as backup.

If either the azimuth or velocity input, or both inputs, are absent, the No Nav mode will result. Absolute No Nav mode situations are as follows:

MODE	AHRU 1	AHRU 2	VELOCITY
DOPPLER DR	INVALID	INVALID	DOPPLER
AIR DATA DR	INVALID	INVALID	CADC 1
AIR DATA DR	VALID	VALID	⚠INVALID
AIR DATA DR	INVALID	INVALID	INVALID

⚠ If the PRI computer is selected, and the AUX computer is programmed and not pinned and CADC 1 becomes invalid, the system will automatically switch to the AUX computer. If the AUX is not programmed, or it is pinned, the No Nav mode will occur. (If the AUX computer is selected the system cannot automatically switch to PRI.)

Note

In the No Nav mode the mode window will display STBY until the invalid input, azimuth or velocity, becomes valid. Once all inputs are again valid the mode window will display ENTER PP. You must enter a new Present Position.

In the event of Inertial Measurement Unit (IMU) failure, the AHRU's are the source of heading information.

When the IDNE is operated above 70° N latitude or below 70° S latitude, no magnetic variation data is available for heading corrections. Grid heading information is supplied by the AHRU's in the DG mode. IMU/headings may be referenced to grid North.

The IDNE has self-test capabilities that monitors the system and provides the next best navigation mode should the one in use malfunction. The equipment is monitored through built-in-test equipment (BITE). The BITE operates whenever the IDNE is operating. In addition, the computers automatically post failure messages on the IDNE Indicator panel for failures occurring in the IDNE, or failures of critical interfaces between the IDNE and other systems. The meaning of these messages is found in the IDNE Failure Displays paragraph in this section. In normal operation, the primary navigation computer controls IDNE operation and performs navigation while the auxiliary computer simultaneously performs those functions not done by the primary computer. In the event the primary navigation computer malfunctions, the IDNE switches operation to the auxiliary navigation computer. The operator can manually switch between computers. Manual switching should be used with discretion, since the auxiliary navigation computer has reduced capability and accuracy.

The IDNE consists of primary and auxiliary computers, primary and auxiliary analog-digital converters, Doppler radar, and an inertial measurement unit (IMU) (figure 1-98).

The following tabulation reflects the basic capability differences between the primary and auxiliary computers:

CAPABILITY	PRI COMPT	AUX COMPT
Memory Section Instructions and Data Words	12,288	8192
TACAN INPUTS	YES	NO
LORAN INPUTS	YES	NO
MADAR OUTPUTS	NO	YES
VERTNAV	YES	NO
VERTICAL FLIGHT VECTOR ANGLE	YES	NO
AIR ALIGNMENT	YES	NO
EMAC OUTPUTS	NO	YES
MMR INPUTS	YES	YES
HAMS OUTPUTS	YES	YES (only when PRI compt is valid)

The primary computer receives heading information from both AHRU's, attitude information from AHRU No. 1, true airspeed and altitude information from CADC No. 1, and radar altimeter information from radar altimeter No. 1. The auxiliary computer recieves similar information from both AHRU's, CADC No. 2, and radar altimeter No. 2. In the event the inputs to the controlling computer become invalid, the IDNE transfers the comparable data, if valid, from the other computer. There is, however, no data transfer between the Pri and Aux computers concerning CADC information. With the Pri computer in control, loss of CADC No. 1 will affect only the wind computation. If in ADDR, the IDNE will automatically switch to the Aux computer, if valid. If the Aux computer is invalid, a no nav mode will result. If the Aux computer is in control, and a failure

of CADC No. 2 occurs, only the wind computation will be affected. If in an ADDR mode, 2 No Nav mode will occur. If in an inertial or inertial doppler mode, accurate navigation will continue with only the loss of wind computation. If in a Doppler DR mode, accurate navigation will continue as long as the doppler does not go to the malfunction or memory mode. If the Doppler does go to either one of these modes, a No Nav mode will result. The operator must insert a new present position into the computer when the Doppler is operating normally.

When IMU heading is not available, the AHRU headings will be compared to a five-degree tolerance. If this tolerance is exceeded, IDNE steering will be terminated and both AHRU invalid lights will come on. Navigation will continue. AHRU inputs for steering will be as follows:

CONDITION	PRI COMPUTER	AUX COMPUTER
Both AHRU's must be in the same mode.	AHRU No. 1	AHRU No. 2
Both AHRU's are not in the same mode	AHRU in Slave Mode (Below 70° Lat.)	AHRU in Slave Mode (Below 70° Lat.)

The navigator can then select the best of the AHRUs for steering by AHRU mode selection. With both AHRU invalid lights on and IMU heading not available, the navigator should select the AHRU with the least heading error. The AHRU with the larger error should be operated in another mode. The navigator should keep the primary computer selected in order to continue receiving the best navigation information available.

Note

IMU heading computation is displayed only while airborne if the AUX computer is in control. The PRI computer will display this computation on the ground. Once IMU heading is initialized by the AUX computer, the heading will be available as long as it is valid.

Note

MMR radar heading reference is affected if AHRU No. 2 is in the DG mode.

In the computer program, Kalman filtering is used to optimize the computer data processing. The Kalman filtering consists of a mathematical routine that averages similar inputs and then directs the computers to accept these weighted values.

If the Inertial Doppler mode is selected, and ground speed is less than 100 knots, Doppler data will not be used by the computer and the IDNE will remain in the Inertial Mode.

All displayed headings are referenced to True North.

The IDNE receives 115-volt AC power from the avionics AC bus No. 1 and No. 2, 115-volt AC power from the navigation AC bus No. 2, and 26-volt AC power from the 26-volt AC navigation buses No. 1 and No. 2 (figure 1-69).

IDNE Control and Indicator Panels.

The IDNE CONTROL panel and the IDNE INDICATOR panel (figure 1-100) provide the navigator with the controls for entering data into the primary and auxiliary computers, select the desired mode of operation, and display digital navigation data. The display lights for the IDNE are located on the same two panels and provide system monitoring and mode selection displays, and displays of up to seven functions for any one of ten display modes, on a selectable basis. These display lights also provide certain indications with the airdrop, flight plan, and vertical navigation functions.

The controls and indicators on the IDNE CONTROL panel are described as follows:

MODE SELECT SWITCH. Except when in the "OFF" position, the MODE ENABLE pushbutton must be depressed before the MODE SELECT switch has any effect on the IDNE operation. The "OFF" position turns off all power to both computers. In the "STBY" position power is supplied to all functional groups of the IDNE (figure 1-98). The computer self-test is initiated and completed after which the computers standby for the ALIGN READY signal from the IMU. The "GRD ALIGN" position causes the computer program to coarse level the inertial platform to the local vertical. After the present position is entered and the coarse align phase is completed, the system goes through the fine align phase, and remains in fine align until a navigation mode is selected. The "AIR ALIGN" position supplies power to both computers, and a modified fine align submode is used in the computer to allow for the airborne alignment problem. Air alignment requires that the Doppler ground speed and drift angle be used as a reference for alignment of the IMU. As a result, it will be necessary to establish Doppler DR navigation before starting an air alignment. The navigator may then use any position fixing procedure, if necessary, to update the present position, during and after the alignment process. For optimum alignment, initial present position should be as accurate as possible. Position updating during the alignment process is recommended. The "INRTL DOP" position automatically selects the optimum navigation mode through internal analysis which is continually displayed on the control panel. In the "INTRL" position, the Doppler input is ignored by the computer. When the inertial doppler

or inertial mode is selected, the Doppler and IMU are automatically cycled through warm-up and alignment into the selected mode. The "DOP DR" position provides dead reckoning navigation with Doppler and AHRU information. The IMU power is turned off. The "AIR DATA DR" position provides dead reckoning navigation with air data and AHRU inputs. Both Doppler and IMU power are turned off.

Note

To return the MODE SELECT switch to "OFF," the switch must be pulled out and rotated. After the MODE SELECT switch has been placed to any position other than "OFF," the MODE ENABLE button must be depressed.

MODE ENABLE PUSHBUTTON. The MODE ENABLE pushbutton is a momentary switch used in conjunction with the MODE SELECT switch, the Auto-Steering Mode, and the TERM NAV and VERT NAV pushbuttons. Depressing the MODE ENABLE pushbutton, after making a selection with the above switches, initiates or terminates the selected operational mode in the computer.

Note

If the IDNE is not in the Term Nav mode, IDNE steering will be terminated when the latching circuits switch from PRES POS to DROP NAV with the data displayed and the operator depresses the MODE ENABLE pushbutton.

TRACK STEER PUSHBUTTON. A TRACK STEER pushbutton is used to select the track steering mode which directs the airplane along a selected ground track. After the destination point (DP) has been set up on the keyboard, and the TRACKSTEER and MODE ENABLE pushbuttons are depressed, the TRACK-STEER light comes on to acknowledge the input. The capture mode is engaged at a crosstrack distance of between 3 to 6 miles. When in this mode, the ADI will display bank steering information and HSI will display crosstrack deviation. The TRACK STEER light stays on until the end DP is reached at which time the TRACK STEER light goes out, and the HDG STEER light comes on.

If the airplane is presently at DP2 and the navigator decides to select DP5, the IDNE will automatically subtract one DP number and the TRACK STEER will be from DP4 to DP5, bypassing DP3. Since there is no DP zero, DP1 is the first DP, but cannot be selected for TRACK STEER. All TRACK STEER functions, however, usually begin at the lowest DP number, and in the event DP1 is selected, ERR will be displayed on the "G" register.

DESTINATION STEER PUSHBUTTON. A DEST STEER pushbutton is used to select the destination steering mode which directs the airplane to the selected destination. After a DP number is set up on the keyboard, and the DEST STEER and MODE ENABLE pushbuttons are depressed, the computers generate signals to steer the aircraft to the DP. The computers acknowledge receipt of the DP mode selection by causing the DEST STEER light to come on. At some break-away distance from the destination point, the navigational computers automatically select the next destination point and continue the steering function. When the airplane flies over the last DP, the IDNE will go into the HDG STEER mode and will maintain a constant heading.

HEADING STEER PUSHBUTTON. A HDG STEER pushbutton is used to select the heading steering mode. After heading data is set up on the keyboard, and the HDG STEER and MODE ENABLE pushbuttons are depressed, the computers generate signals to steer the aircraft to the desired heading. The computers acknowledge receipt of the heading mode selection by causing the HDG STEER light to come on.

VERTICAL NAVIGATION PUSHBUTTONS. Two VERT NAV pushbuttons are used to control the vertical navigation function of the IDNE. The ON/OFF pushbutton, in conjunction with the MODE ENABLE pushbutton is used to activate or de-activate the vertical navigation function of the primary computer. Depressing the ON/OFF pushbutton activates the POINT/SLOPE pushbutton to permit the operator to select the desired vertical navigation mode. Depressing the MODE ENABLE pushbutton permits the computer to use or terminate the vertical navigation program and turn on or turn off the ON/OFF light. The POINT/SLOPE pushbutton is used to obtain programmed vertical navigation steering commands. The altitude at which the airplane crosses the DP will be controlled to within ±100 feet if the DP number entered is XX0. If the DP number entered is XX1, the altitude at which the airplane crosses the DP will not be specified. It will vary with airplane ground speed.

TERMINAL NAVIGATION PUSHBUTTON. The TERM NAV pushbutton is used during airborne radar approaches (ARA) and computed air release point (CARP) operations. Depressing the TERM NAV and MODE ENABLE pushbuttons commands the computers to go into the terminal navigation mode. The computers acknowledge receipt of this command by causing the TERM NAV light to blink green-white-green. To take the computers out of the terminal navigation mode, depress the TERM NAV pushbutton. The light in the TERM NAV pushbutton will change from green to white. Depress the MODE ENABLE pushbutton.

COMPUTER SELECT PUSHBUTTON. A guarded COMP SEL pushbutton is used to select either the primary or auxiliary computer for control of the navigation mode selected. Selection of the primary computer is accomplished by depressing

the COMP SEL pushbutton until the white PRI light comes on. If the primary computer acknowledges the selection the PRI white light turns green. The auxiliary computer is selected in the same manner. The primary navigation computer should always be used when operative since it is designed to provide more complete navigational programs.

Note

Do not manually switch from one computer to another while inflight unless necessary. It is possible that some degradation in navigation performance may occur when switching from computer to computer. This degradation is not readily measurable, however, and therefore would not change the normal operation of the selected computer.

ENTER DISPLAY PUSHBUTTON. An ENTER DISPLAY pushbutton is used to send a command to the selected computer to send its digital data to the IDNE indicator panel. After the COMP SEL pushbutton is depressed, the ENTER DISPLAY pushbutton is depressed until the appropriate computer light comes on. This light indicates that the selected computer is sending digital data to the IDNE indicator panel. If the IDNE indicator panel is receiving this digital data, the appropriate computer light in the DISPLAY indicator on the IDNE indicator panel comes on.

FIX ENABLE PUSHBUTTON. A FIX ENABLE pushbutton is used to update the computers. If the data from a radar fix is valid, the light comes on for approximately two seconds to acknowledge updating of the data. If the fix data is from the TACAN or LORAN, and is valid, the light comes on and remains on until the data becomes invalid or is no longer available.

FIX REJECT PUSHBUTTON. A FIX REJECT pushbutton is used to terminate the fix operation. If the data is invalid or not available, or outside the preset tolerance the computer causes the amber FIX REJECT light to come on. Depressing the FIX REJECT pushbutton turns off the light and terminates the update process.

FIX OVERRIDE PUSHBUTTON. A FIX OVERRIDE pushbutton is used to command the computer to accept the fix correction data even if the computer originally rejected it. Depressing the FIX OVERRIDE pushbutton anytime the FIX REJECT light is on, commands the computer to accept the fix correction data. After the computer accepts the data, the FIX REJECT light goes out. FIX OVERRIDE bypasses the Kalman program.

Note

If the FIX REJECT light comes on because of a fix information being non-existent, the override button will not operate. The invalid light for that source of information will also be on.

ENTER SELECT SWITCH. An ENTER SELECT switch is used with the keyboard to enter data. This switch is used in conjunction with the keyboard to store data into the computers. See "IDNE" Normal Operation", this section for use of the switch.

KEYBOARD PUSHBUTTONS. Eighteen keyboard pushbuttons are used to set fix data into the computers. The ENT pushbutton is integrally lighted. Ten of the pushbuttons indicate digits 1 through 0, the others are CLR (clear), ENT (enter), N, S, E, W, + and -. As digital data is set into the computer, the computer sends this data to the IDNE INDICATOR panel where it is displayed. After the data has been verified, the ENT pushbutton is depressed, the data is stored in the computer, and the ENT light comes on again to acknowledge that the computers have accepted the data.

Depressing the CLR pushbutton removes any data set into the computers since the last time the ENT pushbutton was depressed.

MALFUNCTION STATUS LIGHTS. Three MALF STATUS lights on the IDNE control panel provide basic IDNE component monitoring. The PRI/AUX light comes on whenever the indicated computer is malfunctioning. The D-MEM/D-MALF light comes on to indicate that the Doppler radar has shifted into memory mode or a malfunction has occurred in the system. The IMU MALF light comes on whenever the IMU malfunctions.

See 15-84

TEMPERATURE LIGHT. The TEMP light on the IDNE control panel comes on as a steady light whenever the IMU temperature is out of tolerance. The TEMP light may come on steady for 3 to 15 minutes after turning on and initialization of the IMU, and then blink momentarily as the IMU approaches its normal operating temperature.

CAUTION

If the IMU MALF light comes on simultaneously with a steady TEMP light, an out-of-tolerance temperature condition exists in the IMU. If this occurs, the IDNE operation automatically switches to Doppler DR or Air Data DR. This change in operation is displayed in the MODE status light. The MODE SELECT switch shall then be rotated to the "DOP DR" or "AIR DATA DR" position, as appropriate, and the MODE ENABLE pushbutton depressed. Power is now removed from the IMU.

MODE STATUS LIGHT. The MODE status light on the IDNE CONTROL panel is a rear projection-type light that displays the mode selected by the MODE SELECT switch plus the following computer-controlled submodes:

STBY - Power is on, and the primary and auxiliary computers are on and performing selftests.

ALIGN READY - The IDNE has been temperature stabilized.

COARSE ALIGN - The inertial platform is coarse leveled and coarse aligned.

ENTER PP - Request for present position data.

FINE ALIGN - The inertial platform is in the process of the leveling and gyro-compassing, during ground alignment. During air alignment, the system is in the DOP DR navigation mode.

NAV READY - The minimum fine alignment is complete and the system is ready to perform a navigation mode of operation. If a navigation mode is not selected, the system will continue the fine align process.

INERT DOP - The IDNE is performing inertial Doppler navigation.

INERT - The IDNE is performing inertial navigation only. However, the Doppler radar will be on.

DOP DR - The IDNE is performing Doppler dead reckoning. The inertial platform power is off when this mode is enabled.

AIR DATA DR - The IDNE is performing air data dead reckoning. The inertial platform and Doppler power are off when this mode is enabled.

The controls and indicators on the IDNE INDICATOR panel are described as follows:

DISPLAY PUSHBUTTON. The DISPLAY (NORM/ALTN) pushbutton is used to select the desired data for visual display on the four (C through F) time-sharing data registers.

DISPLAY SELECT SWITCH. The DISPLAY SELECT switch is used to select any one of the ten display modes with the accompanying data displayed on the seven data display registers. See "IDNE Normal Operation" for description of the switch positions.

Note

The display select switch controls the legend displays. Desired data must be called up through the keyboard.

DIMMING KNOB. The DIM CONT is a rotary knob used for varying the intensity of all annunciators and the segmented data displays on the IDNE CONTROL and INDICATOR panels. Edge-lighting of the panels is not affected by this dimmer, but is controlled by the rotary console brightness switch.

INDICATOR PANEL TEST PUSHBUTTON. The momentary PANEL TEST pushbutton is used to manually initiate light filament tests of the IDNE CONTROL and INDICATOR panels. When depressed, the computer-controlled lights (except the legend indicators) on the IDNE INDICATOR panel are turned off. When the pushbutton is released, the computer initiates a program controlled test.

DATA DISPLAY REGISTERS. Seven data display registers (A through G), four of which are timeshared, are controlled by the DISPLAY SELECT and ENTER SELECT switches. Each register consists of a projection-type legend indicator that displays up to 11 legends, and a three-to seven digit alpha-numerical data indicator. The legend indicators are controlled by the DISPLAY SELECT switch and the DISPLAY pushbutton. See figure 1-98 for typical display data and data abbreviations definitions.

VALIDITY LIGHTS. FIVE INVALID lights are provided to monitor the validity of external navigation input data. If a light does not come on, the input data is valid. If the light comes on, the input data from the indicated source is invalid. These lights are as follows: TACAN 1 and 2, RDR ALT 1 and 2, AHRU 1 and 2, CADC 1 and 2, and LORAN/MMR. Only the radar altimeters, CADC's and AHRU's are continuously monitored. The others are monitored only during position fixing with that subsystem.

The CADC invalid lights will also come on anytime the CADC is in a self-test mode. The lights will go off at the completion of the self-test of the CADC computer. The CADC can only self-test on the ground.

The AHRU 1 light comes on if the AHRU 1 heading or attitude validity is false, or if AHRU 1 roll, pitch, or heading differs from the IMU by more than five degrees. The AHRU 2 light comes on if the AHRU 2 heading validity is false or if the AHRU 2 heading differs from the IMU by more than five degrees.

AIR DROP LIGHTS. THE AIR DROP lights come on to alert the flight crew of the status of the air drop operation. These lights are controlled by the computer. The 10-SEC light comes on to alert the crew that the airplane is ten seconds to CARP. The CARP light comes on to indicate that the airplane has arrived at the Computed Air Release Point. At the end of the drop zone the CARP light goes off.

VERT ANGLE ERROR LIGHT. The VERT ANGLE ERROR light will come on any time the navigator programs an angle in excess of 6.3 degrees, or when the IDNE computes an angle exceeding 6.8 degrees.

In the slope mode, the IDNE steers the airplane to the current DP (DP_X). The IDNE looks at the next DP (DP_X+1). When ascending, if the operator programs concurrent slopes and the slope to DP_X+1 crosses the current DP's (DP_X's) altitude at an altitude greater than DP_X's programmed altitude, the VERT ANGLE ERROR light comes on. When descending, if the slope to DP_X+1 crosses below DP_X's programmed altitude, the VERT ANGLE ERROR light comes on. If the current DP (DP_X) is designated as the last DP (XX-), the light will not come on. This is the recommended procedure.

DISPLAY LIGHTS. The PRI or AUX light in the DISPLAY indicator comes on to show which computer is sending data to the IDNE INDICATOR panel.

Doppler Indicator.

A Doppler indicator (figure 1-100) gives visual indications of Doppler drift angle and ground speed. The drift angle scale is marked from zero to 30 degrees left or right. The ground speed counter reads from zero to 999. A MEM flag comes into view anytime the signal inputs are too weak for the system to track, performance limits are exceeded or the Doppler malfunctions. A test pushbutton on the Doppler indicator is depressed to start the Doppler indicator test, but only after the IDNE has been turned on and warmed up. During the warm up period, the D-MALF status indicator on the IDNE CONTROL panel may be on and the NO GO flag in the Doppler indicator will be in view. After the test pushbutton is depressed, the TEST indicator in the pushbutton comes on, the drift angle pointer rotates to 15 (±1) degrees left drift and the ground speed counter displays 293 (±3) knots. The test is completed in approximately 40 seconds. If the test fails, the NO GO flag comes into view.

Doppler Turn On/Off (No Nav) Procedure.

TURN ON

1. Circuit Breakers - OPEN

Open the following circuit breakers on the applicable avionics circuit breaker panel:

a. Primary Nav Cmptr (Avionics AC Bus 1)

b. IDNE Cont Pwr Supply (Avionics AC Bus 1)

c. Aux Nav Cmptr (Avionics AC Bus 2)

d. IDNE Control Panel (Nav AC Bus 2)

2. IDNE Mode Select Switch - DOP DR

3. Mode Enable Pushbutton - DEPRESSED

4. Doppler Indicator - TESTED

Depress the Test button and check the following.

a. Test Button Illuminates - TEST

b. Drift Angle Pointer - 15 (±1) DEGREES LEFT

c. Ground Speed Counter - 293 (±3) KNOTS

Test time is approximately 40 seconds, if the test fails, the No Go flag appears.

TURN OFF

1. IDNE Mode Select Switch - OFF

2. Circuit Breakers - CLOSED

IDNE Procedure Error Indications.

If the navigator makes a procedural error, ERR is displayed in the appropriate data register.

The most common procedural errors are:

(1) Rotating the ENTER SELECT and DISPLAY SELECT switches to the wrong position.

(2) Depressing the pushbutton switches to call up the wrong indication.

To clear the ERR display for Items "1" and "2", set in the correct settings and depress the keyboard CLR pushbutton.

(3) Setting in the wrong number of digits on the keyboard.

(4) Rotating the MODE SELECT switch to the wrong position as part of a sequence.

To clear the ERR display for Items "3" and "4", depress the keyboard CLR pushbutton.

(5) Not completing one data entry procedure before starting another.

To clear the ERR display for item (5), the CLR, MODE ENABLE, then CLR pushbuttons are depressed; data entry or data display procedures can now be re-initiated.

IDNE Computer Initiated Doppler Test.

The IDNE computer in control automatically initiates a self-test of the Doppler when the Doppler data fails the computer reasonableness test. The test lasts approximately 60 seconds.

During the test, the computer switches the IDNE to the inertial mode of operation. If the test fails, the D-MALF light comes on and the IDNE remains in the inertial mode of operation.

If the test is successfully passed, within one minute of receiving valid Doppler data, the computer switches back to the Doppler inertial mode of operation.

IDNE Data Entry Termination Procedure.

To terminate a procedure that has been started, accomplish the following:

1. Actuate the Keyboard CLR pushbutton.
2. Actuate the MODE ENABLE pushbutton.
3. Actuate the Keyboard CLR pushbutton.

The above procedure is used to "terminate" the panel back to the start of a procedure that has more than one enter step. Whereas, the "clear" procedure only clears back to the last ENTER step.

IDNE Partial System Operation

If mission requirements permit, it may be possible to use a partially operative IDNE.

CAUTION

If the IDNE is to be used, the navigator must determine that certain precautions have been taken to prevent damage to and further degradation of the system.

The Missing IDNE LRU table that follows provides a ready reference of actions to be taken to prevent system damage when any IDNE LRU is inoperative or missing.

In addition, certain functions are lost when the IDNE is operated with one or more LRUs inoperative or missing. To compensate for this situation, the IDNE Partial System Operation Matrix and IDNE Partial System Operation table are provided to permit a quick reference to those functions lost or degraded. A matrix of note groups, in the IDNE Partial Partial System Operation Matrix, references combinations of inoperative or missing LRUs.

The IDNE Partial System Operation Matrix may be entered any number of times to obtain note groups applicable to any combination of inoperative or missing LRUs. The IDNE Partial System Operation table lists the functions lost or degraded and gives operating information which is helpful in compensating for the loss of any LRU function.

MISSING IDNE LRU TABLE

MISSING LRU	CIRCUIT BREAKERS PULLED AND PINNED, OTHER PROTECTION	DANGERS TO EQUIPMENT
IMU or CPS	1. IDNE IMU 2. IDNE Cont Pwr Supply 3. HAMS	CPS may be damaged if operated with no IMU.
Primary Computer	1. Primary NAV Cmptr 2. Primary NAV Conv 3. Air holes covered.	Uncovered air holes can cause damage to other units including Aux Comp. and Conv. and SDC.
Primary Converter	1. Primary NAV Conv 2. Air holes covered.	Uncovered air holes can cause damage to other units.
Auxiliary Computer	1. Aux NAV Comptr 2. Aux NAV Conv 3. Air holes covered.	Uncovered air holes can cause damage to other units.
Auxiliary Converter	1. Aux NAV Conv 2. Air holes covered.	Uncovered air holes can cause damage to other units.
IDNE Control Panel	1. IDNE Control Panel, DC 2. IDNE Control Panel, AC 3. All breakers for IMU, CPS both computers and converters and Doppler. 4. Pin or remove Doppler antenna circuit breaker.	NONE - Dead System. Doppler antenna may sustain gearbox damage unless roll and pitch gimbals are pinned with soft nylon pins or antenna removed and stored.
IDNE Indicator Panel	1. All IMU, CPS, computer and converter breakers	IDNE dead. Doppler will operate with no risk.
Doppler Indicator	NONE	NONE
Doppler SDC	1. Doppler 2. Doppler 26 VAC 3. Pin antenna gimbals or remove antenna. 4. Cover air holes.	Doppler antenna may sustain gearbox damage when not powered by SDC unless roll and pitch gimbals are pinned with soft nylon pins or antenna removed and stored. Uncovered air holes can cause damage to other equipment.
Doppler Antenna	1. Doppler 2. Doppler 26 VAC	SDC power supply not properly loaded.

IDNE PARTIAL SYSTEM MATRIX

INOPERATIVE LRU	IMU/CPS	PRIMARY COMPUTER	PRIMARY CONVERTER	AUXILIARY COMPUTER	AUXILIARY CONVERTER	AUXILIARY INDICATOR	DOPPLER ANT. DOPPLER SDC
IMU/CPS	1	1,2,3	NO NAV IN PRI	1,4,5	NO NAV IN AUX	1,8	1,9,17
Primary Computer	1,2,3	2,3	2,3	NO NAV	2,3,5	2,8	2,9
Primary Converter	NO NAV IN PRI	2,3	3	3,4,5	3,5	3,8	3,9
Auxiliary Computer	1,4	NO NAV	3,4,5	4,5	4,5	4,8	4,9
Auxiliary Converter	NO NAV IN AUX	2,3,5	4,5	4,5	5	5,8	5,9
IDNE Control Panel	6	6	6	6	6	6,8	6,9
IDNE Indicator Panel	7	7	7	7	7	7,8	7,9
Doppler Indicator	1,8	2,3,8	3,8	4,8	5,8	8	
Doppler Antenna Doppler SDC	1,9,17	2,3,9	3,9	4,5,9	5,9	9	9
AHRU 1	1,10,16	2,3,10	3,10	4,5,10	5,10	8,10	9,10
AHRU 2	1,11,15,16	2,3,11	3,11	4,5,11	5,11	8,11	9,11
CADC 1	1,12	2,3,12	3,12	4,5,12	5,12	8,12	9,12
CADC 2	1,13	2,3,13	3,13	4,5,13	5,13	8,13	9,13
MMR	1,14	2,3,14	3,14	4,5,14	5,14	8,14	9,14

IDNE PARTIAL SYSTEM OPERATION TABLE

NOTES	FUNCTIONS LOST OR DEGRADED	OPERATING NOTES
GROUP 1 IMU/CPS	1. Inert and Inert Dop modes Inop. 2. HAMS Inop both ADI backup attitudes lost. 3. Ground speed (MMR) and drift angle (MMR & SKE) computed using Doppler. 4. Primary stabilization to MMR and SKE lost. 5. Lat Aug Fault, Yaw Aug Fault. 6. Autoland inoperative.	1. DOP DR and ADDR Normal. 2. Classic AHRU/FD interface. 3. None. 4. AHRU 2 stabilization switched automatically. 5. Operation normal, redundancy lost. 6. Coupled approach (HAMS out).
GROUP 2 Primary Computer	1. Kalman filter sophistication reduced. 2. TACAN, LORAN and celestial fixing ability lost. 3. Computed ground speed (MMR) and drift angle (MMR and SKE) lost. 4. VER NAV inoperative. 5. Vertical vector angle to MMR lost. 6. Distance to go display on HSI lost. 7. HAMS heading fault. 8. Range cursors may be fuzzy.	1. Take fixes to update position. No rate update will take place. 2. Increase manual and MMR fixing. 3. Switch to Doppler radar is automatic. Signals not as smooth. 4. Do manual VER NAV. 5. Switch to GAAS is automatic. 6. Read Dist. to go on Ind. Panel. 7. Use HAMS for attitude monitoring only. 8. Leave inoperative computer in rack.
GROUP 3 Primary Computer	1. All steering signals lost in Pri downgrade to Aux if Aux system is fully operational. 2. MMR cursor inoperative in Pri. 3. CADC 1 input lost in Pri. 4. AHRU inputs lost in Pri. 5. IMU attitudes and heading lost in Pri. 6. HAMS heading fault. No IMU heading. 7. Computed ground speed (MMR) and drift angle (MMR and SKE) lost.	1. Use Pri for Inert or Dopp Inert Nav only, TACAN, LORAN, Manual & Celestial fixing O.K. 2. MMR red light on in Pri. 3. CADC 1 red light on in Pri. 4. AHRU 1 & 2 red light on in Pri. 5. No panel indication. 6. Use HAMS for attitude only. 7. Switch to Doppler is automatic signals are not as smooth.
GROUP 4 Auxiliary Computer	1. MMR cursors lost in both Aux & Pri. 2. MADAR interface lost. 3. EMAC interface lost.	1. Pri cursors normal if Aux computer and converter installed and off. 2. Increase diligence in squawk prep. 3. EMAC remaining fuel time lost.
GROUP 5 Converter	1. All steering signals lost in Aux. 2. IMU inputs lost in Aux. 3. CADC 2 input lost in Aux. 4. AHRU inputs lost in Aux. 5. MMR cursors lost in Pri & Aux.	1. Use Aux for inertial or Dopp inertial Nav. only. Manual fix O.K. 2. No panel indication. 3. CADC 2 red light on in Aux. 4. AHRU 2 red light on in Aux. 5. Pri cursors normal if Aux converter is installed and off. MMR red light on in Aux.
GROUP 6 Control Panel	1. IDNE inoperative.	1. No nav possible. An inoperative panel may be useful for turning on Doppler.

IDNE PARTIAL SYSTEM OPERATION TABLE (CONT)

NOTES	FUNCTIONS LOST OR DEGRADED	OPERATING NOTES
GROUP 7 IDNE Indicator Panel	1. IDNE inoperative.	1. Doppler operational normal.
GROUP 8 Doppler Indicator	1. Manual end-to-end test lost. 2. D/A and G/S on indicator lost.	1. Ignore (Manual end-to-end test is invalid on the ground and in flight). 2. Enter Display Pri/Aux. enter Select Pres. Pos, Display Select DR NAV, Altn: Dopp DA in Register "C" G/S in Register "D".
GROUP 9 DOP SDC DOP ANT.	1. Inertial Doppler mode inoperative. 2. Doppler DR mode inoperative.	1. Inertial mode normal. 2. ADDR mode normal.
GROUP 10 AHRU 1	1. AHRU 1 heading lost to both Pri and Aux. 2. AHRU 1 attitudes lost to ADI and Pri computer. 3. HAMS attitude and heading fault. 4. Pri steering normal reference lost. 5. AHRU 1 red light on.	1. Monitor AHRU 2 heading carefully. 2. Use IMU as backup. 3. Special data codes 103 and 300 permit monitoring IMU attitudes & heading. 4. Automatic switching to AHRU 2. 5. Pri steering is based on AHRU 2.
GROUP 11 AHRU 2	1. AHRU 2 heading lost to both Pri and Aux. 2. AHRU 2 attitudes lost to ADI. 3. HAMS attitude and heading fault. 4. Aux steering normal reference lost. 5. AHRU 2 red light on.	1. Monitor AHRU 1 heading carefully. 2. Use IMU as backup. 3. Special data codes 103 and 300 permit monitoring IMU attitudes and heading. 4. Automatic switching to AHRU 1. 5. Aux steering is based on AHRU 1.
GROUP 12 CADC 1	1. CADC 1 lost in Pri. 2. Wind lost in Pri.	1. When using Pri, enter altitude after each altitude change. 2. Aux wind calculations O.K. if Doppler or IMU is valid.
GROUP 13 CADC 2	1. CADC 2 lost in Aux. 2. Wind lost in Aux.	1. When using Aux, enter altitude after each altitude change. 2. Pri wind calculations O.K. if Doppler or IMU is valid.
GROUP 14 MMR	1. Cursor fixing lost. 2. Radar CARP inoperative. 3. Radar approach inoperative.	1. Use other fixing provisions. 2. Manual CARP O.K. 3. Conventional approach not affected.
GROUP 15 STABILI- ZATION	1. If IMU and AHRU 2 are both inoperative, MMR and Doppler stabilization is lost.	1. MMR will go to gimbal lock. Use tilt control to operate while straight and level. Doppler will use internal pitch correction. Drift angle errors due to roll will be observed during turns. Loss of lock-on will occur in turns.

IDNE PARTIAL SYSTEM OPERATION TABLE (CONT)

NOTES	FUNCTIONS LOST OR DEGRADED	OPERATING NOTES
GROUP 16 FLIGHT DIRECTOR (F.D.)	1. If IMU and AHRU 1 lost, pilots F.D. is inoperative. 2. If IMU and AHRU 2 lost, copilots F.D. is inoperative. 3. With an inoperative IMU, loss of either AHRU results in loss of computed steering signals from the IDNE.	1. Use other system. 2. Use other system. 3. Use other nav aids as FDS input.
GROUP 17 DOPPLER HEADING	1. If both converters and the IMU are inoperative, Doppler inputs cannot be used by the computers due to lack of heading data.	1. This is a no-nav situation in the computers. Manual use of Doppler drift and ground speed is possible.

Navigation.

VERTICAL NAVIGATION.

The vertical navigation steering routine computes a pitch rate command signal which is transmitted to the flight station and AFCS for manual or automatic control of the airplane motion in the vertical plane.

The vertical navigation program in the IDNE computer includes the airplane maneuver limits based upon the structural limitations of the airframe. Steering commands are inhibited in such a way that the airplane will not be commanded to exceed -0.75 to +1.66 g's.

Before vertical navigation can be initiated, the following conditions must be met:

(1) Primary computer must be in control.

(2) The IDNE must be in the inertial or inertial Doppler mode.

(3) CADC No. 1 must be valid.

(4) IMU or AHRU No. 1 attitude outputs must be valid.

(5) Horizontal steering must be in Destination Steer or Track Steer for the slope mode or in Track Steer for point and point-to-point modes.

There are three vertical navigation profiles:

(1) Point - A desired vertical path established by computing the flight path from a DP to a point offset horizontally in front of the next DP. The offset distance is calculated as a function of speed and slope angle so that the flared flight path intersects the DP within ±100 feet of the DP altitude (figure 1-97).

(2) Point-to-Point - The desired vertical flight path is established by computing the line in space based on the position (latitude, longitude and altitude) of the two destination points. The airplane is commanded to fly a smooth flight path with flare dependent on ground speed and the subsequent vertical flight path. On an ascent, the airplane will flare below the programmed DP altitude and on a descent the airplane will flare above the programmed DP altitude (figure 1-97).

(3) Slope - A desired vertical flight path is established by the slope entered for each DP. A horizontal offset is then calculated in the same manner as for the point mode so that once the airplane has intercepted the slope, it will fly the prescribed slope and flare such that the airplane will pass within ±100 feet of the DP altitude (figure 1-97). Upon reaching the next DP altitude, the pitch steering bar will retract from view. Upon reaching the capture point of the slope of the next DP, the pitch steering bar will come into view.

In all modes, upon reaching the last DP, the airplane will be commanded to flare to within ±100 feet of the last DP altitude, the IDNE will switch to Heading Steer; the AFCS, if engaged, will switch to Altitude Hold and the steering bars will remain in view. The last DP is designated by entering a minus (-) after this DP when entering the horizontal navigation data.

Vertical navigation data is normally entered when on the ground, but can also be entered in flight, if required. Each vertical navigation DP has four data entries:

(1) DP number: XX1 for point-to-point (point mode selected)
XX0 for point (point mode selected)
XX0 for slope (slope mode selected)

(2) Required angle at DP, either plus (+) or minus (-): ±6.3 degrees used in the slope mode.

(3) Required altitude at DP

(4) Flare Bearing: True course to next DP. (If DP is used for RAL, flare bearing is Runway magnetic course.)

Vertical Navigation Planning Charts.

The following examples illustrate the use of the Vertical Navigation Planning Charts found in T.O. 1C-5A-1CL-3:

Example 1. Point-to-Point Mode (Climb)

Given:
Distance between DP_2 and DP_3: 20NM
DP_2 Altitude: 10,000 ft
DP_3 Altitude: 14,244 ft
Gross Weight: 500,000 lbs
Ground Speed: 400 Kts
Tailwind: 25 Kts

Find:
Flare Distance for DP_3
Vertical Angle
Maximum Climb Angle

Solution:
Enter the Vertical Navigation Flare and Offset Distance Planning Chart at 400 Kts GS
Go up to Flare Line
Go Left to 3.3
Flare Distance: 3.3 NM
Enter the Vertical Navigation Vertical Angle Planning Chart (0 to 50 Miles) at the Intersection of 20 NM and 4,244 ft
Vertical Angle: 2°
Enter the Vertical Navigation Maximum Climb Angle Planning Chart at the Intersection of the 500,000-lb and 14,244-ft Lines
Go Down to the Zero Wind Line, then Left to the 25-Kt Tailwind Line, then Down to 4.2
Maximum Climb Angle: 4.2°
Airplane Climb Performance will be able to Maintain the Vertical Navigation Angle of 2°

Example 2. Point-to-Point Mode (Descent)

Given:
Distance between DP_4 and DP_5: 10 NM
DP_4 Altitude: 14,244 ft
DP_5 Altitude: 10,000 ft
Gross Weight: 500,000 lbs
Gross Speed: 400 Kts
Wind: 0 Kts

Find:
Flare Distance for DP_5
Vertical Angle
Maximum Descent Angle

Solution:
Enter the Vertical Navigation Flare and Offset Distance Planning Chart at 400 Kts GS
Go up to Flare Line
Go Left to 3.3
Flare Distance: 3.3 NM
Enter the Vertical Navigation Vertical Angle Planning Chart (0 to 50 Miles) at the Intersection of 10 NM and 4,244 ft
Vertical Angle: 4°
Enter the Vertical Navigation Maximum Descent Angle Planning Chart at the Intersection of the 500,000-lb and 14,244-ft Lines
Go Down to 4.7
Maximum Descent Angle: 4.7°
Airplane Descent Performance will be able to Maintain the Vertical Navigation Angle of 4°

Example 3. Point Mode (Climb)

Given:
Distance between DP_2 and DP_3: .120 NM
DP_2 Altitude: 18,000 ft
DP_3 Altitude: 32,000 ft
Gross Weight: 600,000 lbs
Ground Speed: 350 Kts
Tailwind: 40 Kts

Find:
Total Flare Distance for DP_3 (FD+OD)
Vertical Angle
Maximum Climb Angle

Solution:
Enter the Vertical Navigation Flare and Offset Distance Planning Chart at 350 Kts
Go up to Flare Line
Go Left to 2.8
Flare Distance: 2.8 NM
Enter the Vertical Navigation Vertical Angle Planning Chart (0 to 200 Miles) at the Intersection of the 120-mile and 14,000-ft Lines
Vertical Angle: 1.1°
Enter the Vertical Navigation Flare and Offset Distance Planning Chart at 350 Kts NM
Go up to 1.1° on Offset Distance Ver Nav Angles
Go Left to 1.05
Offset Distance: 1.05 NM
Total Flare Distance: 3.85 NM
Enter the Vertical Navigation Maximum Climb Angles Planning Chart at the Intersection of the 600,000-lb and 32,000-ft Lines
Go Down to the Zero-Wind Line, then Left to the 40-Kt Tailwind Line, then Down to 0.8
Maximum Vertical Angle: 0.8°
Airplane Climb Performance will not be able to Maintain a Vertical Angle of 1.1°

Example 4. Point Mode (Descent)

Given:
Distance between DP_4 and DP_5: 160 NM
DP_4 Altitude: 32,000 ft
DP_5 Altitude: 10,000 ft
Gross Weight: 520,000 lbs
Ground Speed: 380 Kts GS
Tailwind: 15 Kts

Find:
Total Flare Distance for DP_5 (FD+OD)
Vertical Angle
Maximum Descent Angle

Solution:
Enter the Vertical Navigation Flare and Offset Distance Planning Chart at 380 Kts
Go up to the Flare Line
Go Left to 3.1
Flare Distance: 3.1 NM
Enter the Vertical Navigation Vertical Angle Planning Chart (0 to 200 Miles) at the Intersection of the 160-Mile and 22,000-ft Lines
Vertical Angle: 1.38°
Enter the Vertical Navigation Flare and Offset Distance Planning Chart at 380 Kts NM
Go up to 1.38 on Offset Distance Ver Nav Angles
Go Left to 1.55
Offset Distance: 1.55 NM
Total Flare Distance: 4.65 NM
Enter the Vertical Navigation Maximum Descent Angles Planning Chart at the Intersection of the 520,000-lb and 22,000-ft Lines
Go Down to the Zero-Wind Line, then Left to the 15-Kt Tailwind Line, then Down to 3
Maximum Vertical Angle: 3.7°
Airplane Descent Performance will be able to Maintain a Vertical Angle of 1.38°

Example 5. Slope Mode (Climb)

Given:
Distance between DP_1 and DP_2: 140 NM
DP_1 Altitude: 1,000 ft
DP_2 Altitude: 14,000 ft
Gross Weight: 660,000 lbs
Ground Speed: 440 Kts
Tailwind: 80 Kts

Find:
Maximum Climb Angle
Desired Vertical Angle
Total Flare Distance at DP_2
Flare Distance from DP_1 to Intercept the Offset Angle

Solution:
Enter the Vertical Navigation Maximum Climb Angles Planning Chart at the Intersection of the 14,000-ft and 660,000-lb Lines
Go Down to the Zero-Wind Line, then Left to the 80-Kt Tailwind Line, then Down to 2.45°
Maximum Vertical Angle: 2.45°
Therefore, a Desired Vertical Angle would be 2°
Enter the Vertical Navigation Flare and Offset Distance Planning Chart at 440 Kts
Go up to 2°
Offset Distance: 2.75 NM
Enter the Vertical Navigation Flare and Offset Distance Planning Chart at 440 Kts
Go up to the Flare Line
Go Left to 3.6
Flare Distance: 3.6 NM
Total Flare Distance from DP_2: 6.35 NM
Enter the Vertical Navigation Vertical Angle Planning Chart at 13,000 ft
Go Right to the 2° Line
Go down to 62
Subtract 6.35 from 140 NM: 133.65 NM
133.65 NM: The Flare Point to Intercept the Altitude at DP_2
Subtract 62 + 3.65 from 133.65 NM
68 NM: Distance from DP_1 to Intercept the Offset Climb Angle to DP_2

Example 6. Slope Mode (Descent)

Given:
Distance Between DP_2 and DP_3: 180 NM
DP_2 Altitude: 20,000 ft
DP_3 Altitude: 5,000 ft
Gross Weight: 520,000 lbs
Ground Speed: 360 Kts
Wind: 0 Kts

Find:
Maximum Descent Angle
Desired Vertical Angle
Total Flare Distance at DP_3
Flare Distance from DP_2 to Intercept the Offset Angle

Solution: Enter the Vertical Navigation Maximum Descent Angle Planning Chart at the Intersection of the 20,000-ft and 520,000-lb Lines
Go Down to 4.1
Maximum Vertical Angle: 4.1°
Therefore, a Desired Vertical Angle Would be -3°
Enter the Vertical Navigation Flare and Offset Distance Planning Chart at 360 Kts
Go up to 3°
Offset Distance: 2.7 NM
Enter the Vertical Navigation Flare and Offset Distance Planning Chart at 360 Kts
Go up to the Flare Line
Flare Distance: 2.95 NM
Total Flare Distance from DP_3: 5.65 NM
Enter the Vertical Navigation Vertical Angle Planning Chart at 15,000 ft
Go Right To the 3° Line
Go Down to 56
Subtract 5.65 from 180 NM: 174.35 NM
174.35 NM: The Flare Point to Intercept the Altitude at DP_3
Subtract 56 + 2.95 from 174.35 NM: 115.4 NM
115.4 NM: Distance from DP_2 to Intercept the Off set Descent Angle to DP_3

NOTES

1. The 6.3-degree climb (or descent) angle is the maximum vertical navigation angle that can be entered in the IDNE by the operator for the slope mode only.

2. The 6.8-degree climb (or descent) angle is the maximum angle that the IDNE can command the airplane to climb.

3. All vertical Navigation Computations are approximations and should be taken to the nearest whole number.

Aerial Delivery (CARP).

CARP is normally accomplished by using the MMR. The operator can accomplish a manual CARP.

The drop number, which is identical to the aimpoint number to be used for the drop operation, is obtained from the flight plan. This number is used to verify that the drop data in the IDNE computer memory is correct. A total of four aimpoints is available.

During CARP operation, the computer can process the following parameters up to the maximum values shown:

(1) Forward Travel Time - 12.7 seconds
(2) Parachute Delay Time - 20.47 seconds (Time-of-fall constant)
(3) Aimpoint - Drop Zone Distance - 131.071 NM
(4) Fall Rate - 81.91 FPS
(5) Ballistic Drop Distance - 1023 feet
(6) Maximum Drop Altitude - 60,000 feet

Radar Approach To Landing.

This mode of operation is used to provide an instrument type of airplane landing. A DP representing the end of the airfield runway is used.

Position Fixing Procedures.

Position fixing procedures are used to update the present position in the computers. The primary computer receives and processes position fix data from the MMR, LORAN and TACAN subsystems, celestial data and manual fixing from visually identified fix points. A total of 15 fix positions may be stored in the computer. The auxiliary computer receives and processes position data from only the MMR subsystem and manual fixing. It does not receive nor process LORAN, TACAN or celestial data. Each position fix operation is terminated when initiating a new position fix operation. The computers have the following position fixing capabilities:

(1) Both computers are capable of making manual fixes with data supplied by the operator when the airplane flies over a known point.

(2) Whenever one of the computers makes a fix, the other computer is also updated.

(3) Only one type of fix can be accomplished at a time.

RADAR POSITION FIXING. If, during the start of the fix procedure, the navigator wants to immediately start a new radar fix by entering a fix number again, two conditions could occur:

(1) If the Kalman cycle was in the process of weighing and accepting the first correction but did not pick it up as yet in the Kalman program, the new fix would override the old fix. The error measured would be approximately the same as the prior measurement.

(2) If the first fix correction was picked up by the Kalman program, the data from both fixes would be utilized. The program cycle is approximately 3 minutes in length.

If the navigator waits longer than 3 minutes before making a decision on Fix Enable, Fix Reject, or Fix Override, the position routine will automatically reject the data.

TACAN POSITION FIXING. When using the TACAN for position fixing, the data input and corresponding position corrections are continuous until the data becomes invalid. The computer will check to ensure that the proper channel has been selected. If the correct channel has not been selected, the appropriate TACAN INVALID light on the IDNE INDICATOR panel will come on. Because there are two TACAN sets, the operator must select the appropriate one to be tuned in.

LORAN POSITION FIXING. When using LORAN for position fixing, the data input and corresponding position corrections are continuous until the airplane is out of range of the transmitting station.

CELESTIAL POSITION FIXING. The navigator should select a time far enough in advance to compile and enter the table of celestial data before it has to be used.

The fix process will be initiated by the navigator. He will begin the program by inserting the GMT of the fix. Using this time and the position at the time of the fix, the Local Hour Angle (LHA) of Aries or other celestial bodies will be computed and displayed in the "F" data register on the IDNE INDICATOR panel. The navigator can then use this LHA and the H0249 to select the stars to be shot.

The IDNE celestial program corrects H_0 for Coriolis/Rhumb line and atmospheric refraction errors. Wander error is not corrected by the IDNE.

IDNE Failure Displays.

The IDNE automatically posts failure messages on the IDNE Indicator panel for failures occurring in the IDNE or failures of critical interfaces between the IDNE and other systems. Posting of fail messages can be accomplished by either computer although certain forms of failure may render the system unable to report the failure. The computer in control will continue to navigate in the best available mode, but the fail message will be displayed until cleared by the operator and the desired is selected. Recall of all current failures can be accomplished using the manual panel procedures anytime prior to system shutdown.

Note

A failure will be reported when it is detected. More than a single failure may be reported in one display and will be indicated by a sum-total of the display numbers. Subsequent failures will interrupt prior displays. A FAIL 2 display will cancel any panel procedure in process. A failure, once reported, will not be reported again except on request.

The failure messages consist of three types and are described as follows:

FAIL 1 MESSAGE.

Either of two FAIL 1 messages are possible depending on which computer is in control. If the primary computer is in control, a FAIL 1 message indicates that the primary computer has a self-test fault. The FAIL 1 message appears only at the time the IDNE is turned on. If a FAIL 1 message is displayed at turn-on, the computer fail light will be red. If no auxiliary computer is available, the system may possibly be useful for Air Data Dead Reckoning navigation.

Note

Certain forms of the above failures may render the system unable to report the failure or may cause the computer to become inoperative later in the mission.

The meaning of each display on the data display registers is described as follows:

DATA DISPLAY

A FAIL (Pri Computer in Control)

B 1

C Refer to the MADAR Failure Message paragraph

D Refer to the MADAR Failure Message paragraph

E Disregard

F This is a unique primary computer FAIL 1 message and displays one of the following, whichever occurs first:

01622 - Computer L - Register Failed

01627 - Computer Interrupt Test Failed

01632 - Computer Self-Test Failed

01653 - Computer Memory Checksum Failed

If the auxiliary computer is in control, a FAIL 1 message indicates that the auxiliary computer has a self-test fault. The FAIL 1 message appears only at the time the IDNE is turned on. If a Fail 1 message is displayed at turn-on, the computer fail light will be red. If no primary computer is available, the system can possibly be useful for Air Data Dead Reckoning navigation.

Note

Certain forms of the above failures may render the system unable to report the failure or may cause the computer to become inoperative later in the mission.

The meaning of each display on the data display registers is described as follows:

DATA DISPLAY

A FAIL (Aux Computer in Control)

B 1

C Refer to the MADAR Failure Message paragraph

D Refer to the MADAR Failure Message paragraph

E Disregard

F This is a unique auxiliary computer FAIL 1 message and displays one of the following, whichever occurs first:

01205 - Computer L - Register Failed

01212 - Computer Interrupt Test Failed

01233 - Computer Memory Checksum Failed

FAIL 2 MESSAGE.

Either of two FAIL 2 messages are possible depending on which computer is in control. If the primary computer is in control, the meaning of each display on the data display registers is described as follows:

DATA DISPLAY

A FAIL (Pri Computer in Control)

B 2

C Refer to the MADAR Failure Message paragraph

D Refer to the MADAR Failure Message paragraph

E This is a unique primary computer FAIL 2 message and displays one or more of the following:

20000 - AHRU-1 vertical attitude invalid to computer

10000 - Primary A/D 26V excitation missing.

04000 - Primary A/D converter valid True/ False bad

02000 - Control power supply bad or off

01000 - Primary A/D D.C. reference test bad

00400 - Doppler test groundspeed bad to computer

00200 - Doppler test drift angle bad to computer

00100 - IMU platform stabilization disabled

00040 - CADC-1 altitude invalid to computer

00020 - CADC-1 true airspeed invalid to computer

00010 - Doppler antenna invalid to computer

00004 - Doppler converter invalid to computer

00002 - Primary A/D converter - to - computer communications bad

00001 - IMU attitude system bad

Note

The FAIL 2 message may indicate more than one failure simultaneously. In this event, the failure message will display the sum of the failures. For example: failure of Doppler test ground speed (00400) and Doppler test drift angle (00200) would be displayed as 00600.

F This is a unique primary computer FAIL 2 message and displays one or more of the following:

20000 - IMU internal communications bad

10000 - AHRU 1 heading invalid to computer

04000 - IMU catastrophic overtemp condition

02000 - AHRU 2 heading invalid to computer

01000 - IMU internal slew control bad

00400 - Computer-to-IMU communications register bad

00200 - Vertical or horizontal steering discrete bad

00100 - Computer egg timer interrupt bad

00040 - Primary A/D converter interrupt bad

00020 - IMU-to-computer interrupt bad

00010 - Computer internal main time interrupt bad

00004 - Computer-to-computer communications failed

00002 - Computer L - Register test failed

00001 - Computer memory checksum failed

If the auxiliary computer is in control, the meaning of each display on the data display registers is described as follows:

DATA DISPLAY

A FAIL (Aux Computer in Control)

B 2

C Refer to the MADAR Failure Message paragraph

D Refer to the MADAR Failure Message paragraph

E This is a unique auxiliary computer FAIL 2 message and displays one or more of the following:

10000 - Auxiliary A/D converter 26V excitation mission

04000 - Auxiliary A/D converter valid true/false test bad

02000 - Control power supply bad or off

01000 - Auxiliary A/D converter D.C. reference test bad

00400 - Doppler test ground speed bad to computer

00200 - Doppler test drift angle bad to computer

00100 - IMU platform stabilization disabled

00040 - CADC-2 altitude invalid to computer

00020 - CADC-2 true airspeed invalid to computer

00010 - Doppler antenna invalid to computer

00004 - Doppler converter (SDC) invalid to computer

00002 - Computer-A/D converter communications failed

00001 - IMU attitude system bad

Note

The FAIL 2 message may indicate more than one failure simultaneously. In this event, the failure message will display the sum of the failure. For example: a bad control power supply (02000) and a bad auxiliary A/D converter DC reference test (01000) would be displayed as 03000.

F This is a unique auxiliary computer FAIL 2 message and displays one or more of the following:

20000 - IMU internal communications bad

10000 - AHRU-1 heading invalid to computer

04000 - IMU catastrophic overtemp condition

02000 - AHRU-2 heading invalid to computer

01000 - IMU internal slew control failed

00400 - Computer-to-IMU communications register bad

00200 - Horizontal steering discrete bad

00100 - Computer egg timer interrupt bad

00040 - Auxiliary A/D converter interrupt bad

00020 - IMU-to-computer interrupt bad

00010 - Computer internal main time interrupt bad

00004 - Computer-to-computer communications failed

00002 - Computer L-Register test failed

00001 - Computer memory checksum failed

FAIL 3 MESSAGE.

A FAIL 3 message can occur when the auxiliary computer has taken control of the IDNE due to the failure of the primary computer and is described as follows:

DATA DISPLAY

A FAIL (Aux Computer in Control)

B 3

C Refer to the MADAR Failure Message paragraph

D Refer to the MADAR Failure Message paragraph

E This is a unique FAIL 3 message:

00004 - Computer to MMR digital output signals failed during a CARP or radar approach.

F This is a unique FAIL 3 message and displays one of the following:

00014 - Computer overtemp in excess of 1 minute

00013 - Steering discrete failed during CARP or radar approach

00012 - Computer cannot control interface discretes

00005 - Essential A/D-D/A converter function failed during CARP or radar approach

00003 - Computer self test failed

00002 - No navigation possible following a request to navigate

00001 - Secondary self test failed

MADAR FAILURE MESSAGE.

When any IDNE Failure message is displayed, a MADAR word will appear in the C and D data display registers. This MADAR word indicates that one or more of the following is out-of-tolerance, unusable or failed:

The following will appear in the C data display register:

02000 - AUX computer or A/D converter above normal temp.

01000 - AHRU-2 heading is invalid to computer

00400 - AHRU-1 heading is invalid to computer

00200 - CADC-2 data invalid or unreasonable (AUX)

00100 - CADC-1 data invalid or unreasonable (PRI)

00040 - Radar altimeter 2 invalid to PRI computer

00020 - Radar altimeter 1 invalid to PRI computer

00010 - TACAN 2/PRI computer communications failed

00004 - TACAN 1/PRI computer communications failed

00002 - LORAN/PRI computer communications failed

00001 - MMR/Computer data interface failed

Note

The MADAR failure message may indicate more than one failure simultaneously. In this event, the failure message will display the sum of the failures. For example: AHRU-1 heading invalid (00400) and CADC-1 data invalid (00100) would be displayed as 00500.

The following will appear in the D data display register:

01000 - Doppler converter (SDC) abnormal

00400 - Doppler antenna abnormal

00200 - IDNE indicator panel

00100 - IDNE control panel

00040 - IMU control power supply

00020 - Inertial measurement unit

00010 - Auxiliary A/D converter

00004 - Auxiliary computer

00002 - Primary A/D converter

00001 - Primary computer

BEARING DISTANCE HEADING INDICATOR SYSTEMS (BDHI).

Four BDHI's (figure 1-103) provide displays of heading, bearing, and distance information from navigation systems installed in the airplane. One indicator is mounted on the pilot's and copilot's instrument panels and two on the navigator's console. The AHRU systems provide magnetic heading on all four indicators. Bearing and distance information from other navigation systems is selected for display by switches on the BDHI selector panels (figure 1-103) mounted adjacent to the indicators.

Heading information can be supplied to the pilot's or copilot's BDHI from the IMU (IDNE) by placing the input selector switch on the Heading Attitude Monitor control panel (11, figure 1-107) to "IMU." The pilot's HAMS control panel supplies monitored AHRU No. 1 or IMU heading inputs to the copilot's BDHI. The copilot's HAMS control panel supplies monitored AHRU No. 2 or IMU heading inputs to the pilot's BDHI. Refer to the Heading and Attitude Monitor System (HAMS) paragraph in this Section for information on this mode of operation.

The pilot's BDHI and the navigator's No. 2 BDHI receive 115-volt, AC power from the navigation AC bus No. 2, and 28-volt, DC power from the avionics DC bus No. 2 (figure 1-69).

The copilot's BDHI and the navigator's No. 1 BDHI receive 115-volt, AC power from the navigation AC bus No. 1, and 28-volt, DC power from the avionics DC bus No. 2 (figure 1-69).

BDHI.

The No. 1 AHRU supplies heading information to the copilot's BDHI and the navigator's No. 1 BDHI. The No. 2 AHRU supplies heading information to the pilot's BDHI and to the navigator's No. 2 BDHI.

Heading appears on the compass card (6) beneath the top index (1). The bearing pointers (3) and (7) indicate the bearings to the selected navigation aid. The distance indicator (4) shows distance in nautical miles to the selected TACAN station. The BDHI off flag indicates loss of BDHI power or an invalid heading signal from the AHRU. The flag does not provide a warning of radio navigation aid malfunction or signal loss.

BDHI Selector Switch Panels.

A selector switch panel (figure 1-103) is mounted adjacent to the pilot's, copilot's, and navigator's BDHI's. The pilot's or copilot's BDHI selector switch panel allows six selections of radio navigation aids: TAC-1, TAC-2, ADF-1, ADF-2, VOR-1 or VOR-2. The navigator does not have a TAC-1 or TAC-2 selector switch. The No. 1 BDHI pointer No. 1 is wired directly to TACAN No. 1 bearing output and the No. 2 BDHI pointer No. 1 is wired directly to TACAN No. 2 system. When the TACAN systems are tuned in, the bearing and distance are automatically displayed on the navigator's two BDHI's.

The navigator's selector switch panel controls the No. 2 pointer displays on both BDHI's at the navigator's station. The panel allows four navigation aid selections: VOR-1, VOR-2, ADF-1, or ADF-2.

MULTI-MODE RADAR (MMR) SUBSYSTEM.

The MMR subsystem installed in this airplane consists of two essentially independent radar sets: one operating at X-band and one operating at K-band. This subsystem provides the capabilities for navigation fixing, reference point location, identification, tracking, terminal navigation, rendezvous, station keeping, ground mapping, weather location and avoidance, terrain following, terrain avoidance/contour mapping, and radar approaches to a landing. These capabilities are available when operating the MMR in conjunction with the primary digital or auxiliary computer, radar altimeter, navigation instruments, angle-of-attack sensor, inertial platform or attitude and heading reference unit (AHRU), drift sensor, and autopilot.

These sets, though optimized for certain modes of operation, can be operated simultaneously and are integrated to provide interlocks and logic switching for flexibility of operation and maximum backup capability. Each radar set has identical mode capabilities, but uses different frequencies to emphasize certain features.

Ground speed and drift inputs for the radar sets are obtained from the IDNE or Doppler radar. Airplane vertical flight vector information is obtained from the angle-of-attack sensor and the IDNE. Pitch and roll information is obtained from the IDNE or AHRU No. 2. Heading information is obtained from AHRU No. 2.

On 00461 and up and airplanes modified by T.O. 1325, when the pilot selects the weather mode on the radar set he is controlling, his indicator, and all other radar indicators repeating that radar set will be oriented to the magnetic heading of the airplane.

Note

When drift inputs to the MMR are available, a zero-drift signal is induced. If the MMR is in either the weather, map, contour mapping, or SKE mode, scope presentations will be oriented to the magnetic heading of the airplane. If the MMR is in the TFTA or radar mode, and the drift inputs go invalid, the FAIL light on the pilot's indicator panel will come on and the NO GO lights on the MMR control panel will come on. This will not occur, howerer, if the RANGE (NMI) switch is in the "EXP B" position.

A weather cell on the airplane heading will appear in the center of the radar display and remain there until the heading is changed.

On 68304 and 68307 thru 00460 not modified by T.O. 1325, the MMR being drift stabilized, is orientated to the ground track causing a weather cell on the airplane heading to appear on the upwind side of the display center. The cell will approach the display center until the airplane flys into it unless the heading is changed. The amount and direction of the drift to which the display is stabilized can be checked from the navigator's Doppler indicator.

WARNING

On 68304 and 68307 thru 00460 not modified by T.O. 1325, an inoperative Doppler or an invalid drift signal will cause an erroneous ground track presentation on the pilot's/copilot's/navigator's MMR indicators. Therefore, if the WEATHER RADAR switch is used to turn ON the MMR, the Doppler must be operating, valid and being monitored at the navigator's panel. In the event these conditions cannot be assured, the MMR weather mode display should not be used.

Note

To orient the MMR antenna to airplane centerline axis while in the AIR DATA DR mode, the operator may store a zero wind in the IDNE.

The components of the two radar sets consist of individual antennas, receivers, transmitter, modulators, microwave circuitry, data processors, radar scopes and their respective controls, and power supplies.

The power supply for each radar set has the capacity for supplying power for the operation of one radar set and all three radarscopes and their respective controls. The radar sets receive 28-volt DC power from the avionics DC bus No. 1, 115-volt AC power from the No. 1 avionics bus, 26-volt AC power from the No. 2 navigation bus, and 28-volt DC power from the No. 2 main DC avionics bus (figure 1-69).

Note

On airplanes not modified by T.O. 1310, it is possible to subject the MMR to a split bus condition. If this happens, the MMR antennas will lose phase reference and drive to their stops. Split bus operation can occur when either the No. 1 or No. 4 bus tie contactor is open. If a generator is malfunctioning, the procedure to ensure normal MMR operation is to isolate the affected generator by placing its generator switch to the "OFF" position and not by placing the corresponding bus tie switch to the "OPEN" position.

On airplanes modified by T.O. 1310, with the DOPPLER circuit breaker on the Avionics AC Bus 1 portion of the navigator's circuit breaker panel open, and no pitch and roll input available from the IMU, the NO GO lights on the MMR control panel will be on.

Multi-Mode Radar Subsystem Controls and Indicators.

The MMR controls and indicators are contained on the MMR control panels, PPI's and pilots' control wheels (figures 1-44 and 1-104). The navigator's RADAR SET CONTROL panel and the NAV INDICATOR panel contain most of the radar set controls and indicators for turning on and monitoring the two radar sets. The pilot's and copilot's control panels and the controls and indicator lights on the radar scopes control and monitor their respective radar scope displays. The pilot's and copilot's radar scopes are identical. The control panels are identical operation, except that only the pilot's TRANSFER switch is operative. The control wheels have a range select switch that is used during TF/TA operation.

The navigator's radar scope is the same size as the pilot's and copilot's, but has more controls and indicators. In addition, the navigator has a cursor control mounted on the right-hand side of the work table that is used for positioning the precision range and azimuth cursors on the radar scope.

The following is a description of the navigator's MMR controls and indicators on the RADAR SET CONTROL panel (figure 1-104).

METER DISPLAY SELECTOR SWITCH. The METER (X AND K) DISPLAY SELECTOR switch is used with the display ammeter. The four positions on the left side of the switch selects the X-band radar set information. The four positions on the right side of the switch do the same for the K-band radar set.

In the "XTAL" position, a steady reading indicates proper operation of the mixers and AFCs.

The "MAG" positions check the magnetron current to determine that the transmitters and modulators are operating properly. A greenbar reading indicates an acceptable operating range for both radar sets.

In the "PRESS" position a needle deflection indicates that the pressure pump is on. The pump should be on for only short periods of time if there are no leaks in the wave guide.

The "FREQ" position indicates the relative transmitter frequency. The frequency can be varied from 2 to 10 for the X-band radar and from 0 to 10 for the K-band by using the FREQUENCY ADJUST switch.

RADAR SET FUNCTION SELECTOR SWITCHES. A FUNCTION SELECTOR switch is provided for each (X and K) radar set. The "OFF" positions remove power from the radar sets. The "STBY positions provide warm-up power for the radar sets. The transmitters are off and the antennas do not scan in the "STBY" position. The "TEST" positions supply test inputs to the radar sets for preflight/inflight non-radiating checks. Special test displays are generated for the PPI's. The "OPR" positions provide full operating power to all components. If the "STBY" position was not previously selected, a two-minute delay is required after turning the system on before transmission is possible.

FREQUENCY ADJUST SWITCH. The FREQ adjusting switch, spring-loaded to the center position, permits an increase or decrease in the transmitter frequency. In order to change the transmitter frequency on either radar set, the METER display selector switch must be positioned to "FREQ" for the appropriate radar set. This switch is used to check if the AFC locks on.

RECEIVER MANUAL TUNING KNOBS. Two concentric (COARSE, FINE) receiver MAN. TUNE knobs permit coarse and fine manual tuning of the two receivers. Tuning is possible over the entire operating frequency range of the two transmitters. In order to tune a radar set manually, the TUNE MODE selector switch, for the appropriate radar set, must be in the "MAN." position.

RECEIVER TUNING MODE SELECTOR SWITCHES. Two TUNE MODE selector switches are used to select the tuning mode for the local oscillators. The "MAN" position provides manual tuning of the applicable oscillator, but has no frequency agility (FA). The "AFC" (automatic frequency control) position provides automatic control of the applicable oscillator frequency and inhibits the frequency agility (FA) operation. The "FA" provides automatic control of the applicable oscillator frequency and FA operation (AFC + FA).

Note

Frequency agility (FA) enables the transmitter to dither in frequency to eliminate the scintillation effects of low level navigation. This position must be selected for CM, TFTA and RA modes of operation.

RECEIVER SENSITIVITY TIME CONTROL KNOB. Two, concentric (AMPLITUDE, RANGE) STC knobs control the amplitude and slope of the STC gain waveform. The receiver gain is controlled so that the intensity of near targets can be equalized with the intensity of long range targets on the indicator. The STC control can be used with all mapping modes and ranges.

HEADING SELECTOR (DEGREES) KNOB. A rotary HDG SEL (DEG) knob provides a means for setting in variation corrections for magnetic headings from 0 to 360 degrees, to provide true North. This knob can also be used for other navigation purposes.

K-BAND RADAR SET POLARIZATION SELECTOR SWITCH. A K POL switch is used in the "CROSS" position to select the vertical polarization (receive) which decreases the return from weather when using ground mapping displays. The "NORMAL" position is used to select horizontal polarization (receive) when weather causes no problem. The X-band radar can transmit and receive horizontally and vertically. The K-band radar can transmit horizontally only, but can receive horizontally and vertically.

WARNING

The "NORMAL" position of the K-POL switch shall be selected when the K-band radar is being used for weather avoidance.

GROUND CLEARANCE SELECTOR KNOB. A rotary CLEARANCE (X100 FT) knob is rotated from "0" to "15" to set in the desired distance to the horizontal plane (beneath the airplane) for the contour mapping (CM) mode. The navigator may set his contour threshold independently of the pilot's setting.

ANTENNA TILT CONTROL KNOB. The larger TILT knob of a dual concentric control controls the vertical tilt of the antenna. Controlling the antenna in this manner maximizes radar scope illumination and reception for weather and ground mapping modes of operation. Tilt control is available from plus 10 degrees to minus 15 degrees. Tilt control is available in all modes except terrain following and contour mapping and station keeping.

ISO ECHO CONTROL KNOB. The smaller ISO ECHO knob of a dual concentric control, determines the iso echo contour threshold level, enabling the location of storm centers. Radar returns above the threshold level are blanked on the display screen.

GLIDESLOPE (DEGREES) SELECTOR SWITCH. The GLIDESLOPE (DEG) selector switch, numbered in the "2," "2.25," "2.5," "2.75," "3," "3.5," "4," "5," "6," "7" positions selects the desired airplane glideslope angle (2-7 degrees) during a radar approach to a landing.

RECEIVER GAIN CONTROL KNOB. A rotary RCVR GAIN knob adjusts the receiver gain for the best display.

Note

The Tilt, Iso-Echo and Receiver Gain Controls are only operative at the station in control of the X-band or K-band radars.

GROUND SWEEPS CONTROL. A rotary GND SWPS control is used to eliminate the altitude hole. When rotated out of the "SR" (slant range) position, the INCR Alt function is activated.

Note

Do not use altitude delay with less than four nautical miles of range set in, because sweep distortion will occur.

NO GO INDICATOR LIGHTS. Two NO GO indicator lights, located on the FUNCTION selector switch portion of the navigator's RADAR SET CONTROL panel, come on whenever the selected mode of operation indicates a functional failure or if incompatible settings are selected by the operator.

CURSOR CONTROL HANDLE. A pistol grip type control handle is used by the navigator to control the movement of the range cursor by applying forward or aft force on the control handle. The azimuth cursor is controlled by applying a left or right force on the control handle. The force applied to the control handle is sensed by the digital computer which in turn drives the cursors.

CURSOR CONTROL TRIGGER BAR. The trigger bar is used to activate the cursor control handle (strain gauges and UPDATE COMMAND pushbutton). A slip ring is provided to keep the control handle continuously active once the trigger bar has been engaged.

UPDATE COMMAND PUSHBUTTON. An update command pushbutton, located on top of the control handle is used to signal the computer to accept position information changes that are being or have been generated by the operator's movement of the control handle.

CURSOR REPOSITION PUSHBUTTON. A CURSOR REPOSITION pushbutton signals the computer to reposition the cursors to the previously computed aim point so as to access computer error.

The following is a description of the MMR controls and annunciators on the NAV INDICATOR PANEL (figure 1-104).

INTENSITY KNOB. The smaller knob of a dual concentric control, is used to change the intensity of markers or the cursors on the radar scope.

CURSOR/MARKER SELECTOR KNOB. The outer control of a dual concentric control is used to select the cursors or markers to be displayed on the radar scope. The "MKR" position selects the manual control of the scan center and the "CURSOR" position selects the computer control.

RETICLE KNOB. A rotary RETICLE knob mechanically controls the positioning of the cross-hairs of the radar scope.

BEZEL LIGHT KNOB. A rotary BEZEL LIGHT knob is used to control the illumination intensity of the outer ring of the radar scope that contains the bearing numbers and division marks, and the RANGE marker lights.

STAB SWITCH. The STAB switch is a two position toggle switch ("NORTH" and "GROUND TRACK") used to orientate the azimuth ring on the PPI. In the "NORTH" position, the MMR receives data from AHRU No. 2 to orient the azimuth to MAG North. In the "GROUND TRACK" position the MMR receives drift data from the IDNE to orient the PPI to the GROUND TRACK of the airplane. Variation correction, set in with the HDG SEL (DEG) knob on the RADAR SET CONTROL panel, is required to provide true North. The "GND TCK" position orients the sector displays so that the ground track is "up."

WARNING

On 68304, and 68307 thru 00460 not modified by T.O. 1325, with the IMU and the Doppler radar inoperative, the display on the pilot's and copilot's indicators will be erroneous. The display on the navigator's indicator will also be erroneous when ground track is selected. Ground track oriented displays should not be used for weather avoidance or RAL's when the IMU and Doppler are both inoperative.

WARNING

Erroneous AHRU 2 heading information will be reflected on the pilot's, copilot's, and navigator's heading display indicators. Selection of IMU on the copilot's HAMS control panel will not change the MMR display. The navigator should not select "STAB NORTH."

MODE SELECTOR SWITCH. The MODE selector switch selects the mode in which the MMR is to be used. The "BCN" (beacon) position provides PRF, pulse width, transmitter frequency and receiver frequency for beacon operation. Only radar beacon signals are displayed on the radar scope. All "MAP" position ranges may be used. The "WX" (weather) position provides the pencil beam (X band only) for resolving cloud formations and ground mapping position type displays. ISO echo is available only in the "WX" position for determination of relative cloud density. The "MAP" position provides the fan beam and displays ground targets for navigation purposes. The ranges available vary from two to 250 miles. The "CM" (contour mapping) position provides video displays on the 2-30 mile MAP presentations that protrude through a horizontal plane below the airplane. The antenna is set at zero tilt. The "TFTA" (terrain following/terrain avoidance) position provides a combination CM and elevation/azimuth contour display with a sweep length of 10 nautical miles on the PPI. The antenna is set at zero tilt. The "RA" (radar approach) position sets up the approach-to-landing mode of operation. The navigator slews the cursors on the 2-30 or EXP-B displays at the beginning of the runway. Glideslope deviation information is sent to the ADI. The "SKE" (station-keeping equipment) position provides external video information from the SKE equipment to be presented on the SKE 1.5 and 2-30 mile sweep ranges. Maximum useful range of SKE is 20 NMI; however, range marks may be displayed to 25 NMI. If the navigator is repeating the pilot's radar, this switch is effective depending upon what mode the pilot has selected.

RANGE (IN NAUTICAL MILES) SELECTOR SWITCH. The RANGE (NM) selector switch, that is the larger knob of a dual concentric control, is used to select range. As the range is changed, the range marks, transmitter pulse width, and transmitter PRF are also changed. The "SKE 1.5" position provides an SKE 1.5 mile 360 degree sweep with one third mile markers. The "EXP B" position provides an expanded .5R sweep length presentation with the radar approach operation and precision fix taking as the primary uses.

The "2-30/1" position provides a variable sweep length from 2 to 30 miles for ground mapping and 2 to 20 miles for SKE operation with one-mile markers. The "2-30/5" position provides the same information as the "2-30/1" position, except that the markers are five miles apart. The "60" position provides a 60-mile ground mapping sweep with 10-mile markers. The "120" position provides a 120-mile ground mapping sweep with 20-mile markers. The "250" position provides a 250-mile ground mapping sweep with 50-mile markers. The "20 DLY" position provides a 20-mile sweep with a variable sweep start delay from 15 to 230 miles.

VARIABLE/DELAY KNOB. A rotary VAR/DLY knob, that is the smaller knob of a dual concentric control, is used to regulate the sweep length when the RANGE (NM) selector switch is in the "2-30/1" or "2-30/5" position. In the "20 DLY" position of the RANGE (NM) selector switch, the VAR/DLY knob regulates the 20-mile sweep start from 15 to 230 miles.

DEPRESS CENTER SWITCH. The DEPR CTR switch moves the origin of the sweep near the edge of the display when in the "ON" position. In the "OFF" position, the origin of the sweep is moved to the center of the display. This switch is inoperative in the "TFTA" and "SKE" positions of the MODE selector switch, in the "EXP B" position of the RANGE (NM) selector switch, and in the "180" degree position of the SECTOR WIDTH control. This provides a two to one expansion along the antenna scan center.

BRIGHTNESS KNOB. A rotary BRT knob, that is the larger knob of a dual concentric control, is used to vary the brightness of the sweeps.

VIDEO GAIN KNOB. A rotary VID GAIN knob, that is the smaller knob of a dual concentric control, is used to vary the intensity of the displayed targets.

SECTOR WIDTH SELECTOR SWITCH. The SECTOR WIDTH selector switch, that is the outer control of a dual concentric control, is used to select the antenna sector scan width between 30 and 120 degrees centered on the manual scan center or the azimuth cursor bearing.

Note

The "180" degree position is used to select a fixed sector width of 180 degrees centered on the ground track. The "180" degree position should not be used for weather avoidance.

SCAN RATE SELECTOR SWITCH. The SCAN RATE selector switch, that is the inner control of a dual concentric control, is used to select an antenna scan rate. The "S" (slow) position sets a scan rate of 50 degrees per second. The "F" (fast) positions sets a scan rate of 100 degrees per second. The SKE antenna scan rate is a fixed rate of 90 degrees per second.

SCAN CENTER LINE KNOB. A rotary (left "90" degrees, "0" degrees, right "90" degrees) knob selects relative bearing of the scan center line for manual control. This control is operable when the CURSOR/MKR selector switch is in the "MKR" position.

RADAR SET ASSIGNMENT PUSHBUTTON. An ASSIGN pushbutton is used to assign either the X- or K- radar to either the navigator or to the pilots. The appropriate X and K annunciator lights on all PPI's come on to acknowledge radar set assignment. The assignment pushbutton is inoperative when the pilots are in the TF/TA mode.

RADAR (PPI) REPEAT SWITCH. The radar (PPI) repeat switch is used to repeat the video portion of the pilot's radar scope on the navigator's radar scope. In the "FWD" position, the navigator's indicator repeats scan angle, center and speed, tilt, PW, and PRF of the pilot's radar. On MAP-PPI, total scan angle is controlled by the operator in control of the forward radar. The navigator can vary the repeated display by changing the range if it is compatible with the PRF. The display cannot be varied in the TF/TA mode. He can also vary the display controls. In the "NAV" position, the navigator has complete control of his radar.

RANGE MARKER LIGHTS. Six range marker lights (1/3, 1, 5, 10, 20, 50) indicate the range markers displayed. In the TF mode the 5 and 10 lights indicate sweep length if the forward radar is in the TF mode. If the navigator is not in the FWD mode, but is in the TF mode or the 60 MAP modes, the 10 light is on. The range marker lights intensity is controlled by the BEZEL LIGHT knob.

MODE ANNUNCIATOR LIGHTS. The mode annunciator lights BCN, WX, MAP, TF/CM indicate the operating mode of the "FWD" assigned radar. The applicable annunciator light will come on when the RADAR (PPI) REPEAT switch is in the "FWD" position.

RADAR SET ASSIGNMENT LIGHTS. The appropriate (X, K) radar set assignment light will come on to indicate which radar is assigned to the navigator for primary control.

The following is a description of the pilot's and copilot's MMR control panels (figure 1-104).

MODE SELECTOR SWITCH. The MODE selector switch enables the pilots to choose the mode in which the radar set is to be used. The pilot and copilot can independently select an operating mode if they are compatible. One operator, as assigned by the pilot with the TRANSFER pushbutton has primary control. The "BCN," "WX," "MAP," "CM," and "SKE" positions provide the same functions as the navigator's mode selector switch. The "TFTA" position provides the pilot/copilot with a combination PPI CM and an elevation/azimuth contour display. Pitch deviation signals for flight commands are sent to the autopilot, ADI, and pilot/copilot radar scopes to provide multiple processing and visual displays terrain following. The antenna is set at zero tilt. Sweep lengths of 5 and 10 miles can be selected with the TA/TF RANGE SEL pushbutton on the pilot's and copilot's control column. The pushbutton is spring-loaded to OFF so that the display is always 10 nautical miles except when the button is depressed. The "REP" position provides the pilots with a display of the navigator's video.

The operator not having control of the radar set can select other modes on his display if the mode is capable of being displayed. If the pilot has control and is in the terrain following mode, the copilot can select ground mapping at short ranges, but if the pilot has selected the beacon mode, the copilot can only select BEACON or REPEAT.

RADAR SET TRANSFER PUSHBUTTON. A TRANSFER pushbutton is used to transfer control of the radar assigned to the pilots from one pilot to another. Only the transfer switch on the pilot's panel is operative.

ANTENNA TILT CONTROL KNOB. The larger TILT knob of a dual concentric control, controls the vertical tilt of the antenna. Controlling the antenna in this manner maximizes radar scope illumination and reception for weather and ground mapping modes of operation. Tilt control is available from plus 10 degrees to minus 15 degrees. Tilt control is available in all modes except terrain following and contour mapping and station keeping.

ISO ECHO CONTROL KNOB. The smaller ISO ECHO knob of a dual concentric control, determines the ISO ECHO contour threshold level, to help in finding the location of storm centers. Radar returns above the threshold level are blanked on the radar scope.

GROUND CLEARANCE CONTROL SWITCH. A ground clearance control switch, spring loaded to the center position, is used to set in a ground clearance from 0-1500 feet on the ground clearance counter. This clearance is the distance of ground clearance or the CM plane beneath the airplane for the CM mode (200 to 1500 feet in the TF mode). When in the TF mode, the CM plane is about 80 percent of the ground clearance below the airplane. With the pilot in control of the K-radar set (TF/TA mode selector) and the navigator in control of the X-radar set, the pilot controls both ground clearance counters. Placing a ground clearance control switch to "INCR" or "DECR," either increases or decreases the ground clearance to be maintained below the airplane. The control has a fast or slow speed.

RIDE SELECTOR SWITCH. The RIDE selector switch is used to select the related weight of the load to the airplane climb capabilities. The "1" positions represent a heavy maneuvering load, the "2" positions represent a medium load, the "3" positions represent a light load, and the "SOFT" positions represent a peak-to-peak terrain following mode of flight.

RANGE (IN NAUTICAL MILES) SELECTOR SWITCH. The RANGE (NM) SELECTOR switch, that is the larger knob of dual concentric control, is used to select range, range markers, display format, system PRF and pulse width. The "SKE 1.5" positions provide an SKE 1.5 mile sweep with one third mile markers. The "2-30/1" positions provide a variable sweep length from 2 to 30 miles for ground mapping and 2 to 20 miles for SKE operation with one-mile markers. The "2-30/5" positions provide the same information as the "2-30/1" positions, except that the markers are five miles apart. The "60/10" positions provide a 60-mile ground mapping sweep with 10-mile markers. The "120/20" positions provide a 120-mile ground mapping sweep with 20-mile markers. The "250/50" positions provide a 250-mile ground mapping sweep with 50-mile markers. The "20 DLY" positions provide a 20-mile sweep with a variable sweep start delay from 15 to 230 miles.

VARIABLE/DELAY KNOB. A rotary, VAR/DLY knob operates the same as the navigator's VAR/DLY knob on the NAV INDICATOR panel.

RECEIVER GAIN CONTROL KNOB. A rotary, RCVR GAIN knob adjusts the receiver gain for the best display. Only the operator in control of the radar has his control operative.

GROUND CLEARANCE COUNTER. A four-place ground CLEARANCE (FT) counter provides a readout of the ground clearance set in by the ground clearance switches. This readout is from 0 to 1500 feet. In the TF mode, the counters are restricted to values above 200 feet.

The following is a description of the pilot's and copilot's MMR radar indicator panels (figure 1-104).

CENTER DEPRESS SWITCH. The center depress switch is used to move the origin of the radar scope sweep to the edge ("DEPR" position) of the display or back to the center ("CTR" position) of the radar scope. In the "DEPR" position, the center of the scan passes through the center of the screen.

IMAGE PERSIST CONTROL KNOB. A rotary PERSIST knob that is the larger knob of a dual concentric control, is used to control the persistance of the image on the indicator.

MARKER/CURSOR INTENSITY CONTROL KNOB. A rotary MKR CSR INT knob that is the smaller knob of a dual concentric control used to control the intensity of the markers or cursors on the DVST.

VIDEO GAIN CONTROL KNOB. A rotary VID GAIN knob that is the larger knob of a dual concentric control is used to control the intensity of the displayed targets.

VIDEO BRIGHTNESS CONTROL KNOB. A rotary, VID BRT knob that is the smaller knob of a dual concentric control is used to control the brightness of the sweeps.

IMAGE BRIGHTNESS CONTROL KNOB. A rotary, IMAGE BRT knob is used to mechanically control the brightness of the PPI image by rotating the elements of a polaroid filter.

GROUND SWEEP CONTROL KNOB. A rotary GND SWP control switch, with an "SR" (slant range) position, operates in the same manner as the navigator's GND SWPS switch.

TF/TA RANGE MARKER LIGHTS. Two TF/TA range mark mode lights are provided. The 5 or 10 range marker lights come on to indicate which TF/TA sweep is displayed.

BEACON MODE LIGHT. A BCN light comes on for the operator that does not have control of the forward radar when the forward radar is in the beacon ("BCN") mode or when in the beacon repeat mode.

WEATHER MODE LIGHT. A WX light comes on for the operator that does not have control of the forward radar when the forward radar is in the "WX" mode or when in the weather repeat mode.

MAPPING MODE LIGHT. A MAP light comes on for the operator that does not have control of the forward radar when the forward radar is in ground mapping or repeat mode.

TERRAIN FOLLOWING/CONTOUR MAPPING MODE LIGHT. A TF/CM light comes on for the operator that does not have control of the forward radar or when in the TF/CM repeat mode.

RADAR APPROACH MODE LIGHT. A RA light comes on when the operator selects "REPEAT" and the navigator has selected radar approach ("RA").

RADAR SET TRANSFER LIGHTS. The appropriate P or CP light comes on to indicate which pilot has control over the forward radar.

RADAR SET ASSIGNMENT LIGHTS. The appropriate X and K light comes on to indicate which radar set has been assigned to the forward station.

OBSTACLE WARNING LIGHT. An OBST light comes on and a warning horn sounds when the airplane is approaching an obstacle in its flight path during TF/TA operation, and cannot overfly the obstacle by clearing it at the set clearance altitude with the ride control setting selected.

FAILURE WARNING LIGHT. A FAIL light comes on when the TF or RA function fails.

The following is a description of the MMR range select switch on the pilot's and copilot's control wheels (figure 1-44):

TA/TF RANGE SELECT SWITCH. The TA/TF RANGE SEL switch is used to momentarily switch ranges when the MMR is in the TF/TA mode. Depressing the switch changes the PPI range display from 10 to 5 N.M., and changes the range marker lights, on the top of the pilot's or copilot's PPI, from 10 to 5 N.M. When the switch is released the display and marker light return to 10 N.M.

Operation of MMR X-Band with Weather Radar Switch.

A WEATHER RADAR switch, located on the pilot's side console (figure 1-104), is provided for turning on the X-band radar set from the pilot's station. The switch is placed to "FERRY" if the pilot desires to use the weather mapping mode of the MMR.

To turn on the MMR X-band radar, accomplish the following:

1. IDNE Mode Select Switch - DOP DR
2. Mode Enable Pushbutton - DEPRESSED

WARNING

On 68304 and 68307 thru 00460 not modified by T.O. 1325, an inoperative Doppler, or an invalid drift signal will cause an erroneous ground track presentation on the pilot's/copilot's/navigator's MMR indicators. Therefore, if the WEATHER RADAR switch is used to turn on the MMR, the Doppler must be operating, valid and being monitored at the navigator's panel. In the event these conditions cannot be assured, the MMR weather mode display should not be used.

3. Navigator's X-band radar - PREFLIGHTED
   a. Tune Mode - AFC
   b. STC-CCW
4. Weather Radar Switch - FERRY

Allow the radar to warm up for at least two minutes.

WARNING

The system is transmitting radar energy at the end of the warm-up period.

a. If no annunciator lights are illuminated on the pilot's indicator, the Ku-radar is forward. Depress the ASSIGN pushbutton on the navigator's indicator.

5. Transfer Pushbutton - ASSIGN TO PILOT CONTROLLING THE RADAR.

Note

Only the pilot's transfer button is "hot." Steps 3 thru 13 apply to the forward station.

6. Mode Selector - WX
7. Range Selector - 60/10

It is recommended that 60 NM be selected. On the 30 mile ranges, the VAR/DLY Knob must be rotated CW.

8. Tilt - 0°
   a. Iso Echo - CCW

Adjust in flight as required.

9. Vid Brt - FULL CCW
   Vid Gain - FULL CCW
   Rec Gain - FULL CCW
   Persist - MID POINT

10. Gnd Swps - SR

11. Vid Brt - ADJUST FOR FAINTSWEEP

12. Vid Gain - FULL CW, BACK OFF 1/4 TURN

13. Rec Gain - CW

The video gain and tilt may have to be adjusted to optimize the targets.

14. Image Brt, Persist and Marker Intensity - AS DESIRED

Adjust as desired.

WARNING

On 68304 and 68307 thru 00460 not modified by T.O. 1325, the pilot/copilot indicator displays are always ground track oriented. Drift signals are not available to the MMR when the IMU and Doppler Radar are both inoperative. Operation of the MMR for weather avoidance with both the IMU and Doppler Radar failed should be conducted with extreme caution.

To turn off the MMR accomplish the following:

1. Weather Radar Switch - NORMAL

If the Ku-Radar is to be used, accomplish the following:

1. Navigator's Ku-Band Radar - PRELIGHTED
   a. Tune Mode - AFC
   b. STC - CCW
   c. K-Pol Switch - NORMAL
   d. K-Radar Function Switch - OPR
   e. Assign Pushbutton - K-RADAR, FORWARD

Multi-Mode Radar Subsystem Operating Modes And Characteristics.

The MMR subsystem provides the following modes of operation:

MODE	PRIMARY OPERATING BAND	SECONDARY OPERATING BAND
(1) Ground Mapping (High Altitude)	X-Band	K-Band
(2) Ground Mapping (Low Altitude)	K-Band	X-Band
(3) Contour Mapping	X-Band	K-Band
(4) Terrain Following (Manual and Automatic)	X-Band	K-Band
(5) Terrain Avoidance (Manual)	X-Band	K-Band
(6) Weather Mapping	X-Band	K-Band
(7) Radar Approach	K-Band	X-Band
(8) Radar Beacon (Identification)	X-Band	K-Band
(9) Station Keeping Display	(Display Function Only)	

The modes of operation are set up on and controlled from the pilot's, copilot's and navigator's MMR control panels and radar scopes and are described as follows:

GROUND MAPPING MODE. The "MAP" position of the MODE switch is used for general purpose ground mapping and navigation. At high altitudes, the GND SWP(s) controls should be set to eliminate the altitude hole at the center of the radar scope display. The pilot and copilot may optimize their displays using their VID GAIN, RCVR GAIN, MKR/CSR INT, PERSIST, and VID BRT controls; and by selecting the range desired with the RANGE (NMI) controls. The RCVR GAIN control is operative only for the operator having control of the radar.

Primary high altitude ground mapping is provided by the X-band radar. The high altitude ground mapping mode provides an antenna azimuth beam width of 2.2 degrees when illuminated with horizontally polarized energy. Azimuth coverage of 180 degrees about the forward sector of the airplane, together with a variable width section scan of 30 degrees to 120 degrees, steerable within the gimbal limits of the antenna, is provided. The Ku-band radar provides a backup high-altitude mapping mode that is equivalent to the primary mode, except for the reduction of maximum range under adverse weather conditions.

Primary low altitude ground mapping is provided by the Ku-band radar. The low altitude ground mapping mode provides an antenna azimuth beam width of 0.85 degrees when illuminated with horizontally polarized energy. Reception can be horizontally or vertically polarized. This polarization diversity provides better ground mapping under adverse weather conditions. Pattern coverage and display optimization are provided by a combination of deflector tilt and receiver STC. The antenna scan capabilities and the displays

available in this mode are identical to those described for the high-altitude ground mapping mode. The X-band radar provides a back-up low-altitude ground mapping mode.

During map matching, the navigator should use the "NORTH" up presentation of the STAB switch, reticle control and GND SWEEPS. The STC and TILT controls should also be used to give the most uniform return from all scan ranges. If precipitation obscures parts of the ground mapping run during the K-band operation, the K POL switch should be changed from the "NORM" to the "CROSS" position to reduce the intensity of the weather echoes. The scan angle and scan rate may also be varied to concentrate the transmitter energy on a given target. Placing the DEPR CTR switch to "ON" provides a two-to-one expansion of the scanned display over the full screen, but the edge of the wide displays are lost.

Range and azimuth cursors on the radar scope display represent the computer's estimate of the location of a given checkpoint or destination. When this point has been identified on the navigator's display, any error present may be corrected using the cursor control handle.

Squeezing the trigger bar on the cursor control handle sends a signal to the digital computer to stand by to receive a navigational fix that is about to be made. The cursors are moved about the scope face by applying a force to the control in the direction of desired motion. The pushbutton on top of the handle is depressed when the cursors have been accurately positioned. This action commands the computer to accept the new fix data. In addition, depressing and holding the CURSOR REPOSITION pushbutton, permits the navigator to view the former cursor position before updating the conputer.

CONTOUR MAP MODE. The contour map mode is selected by rotating the MODE selector switch to "CM" and selecting 2-30/1 or 2-30/5 on the RANGE switch. The navigator can also select EXP B on the RANGE switch. In this mode of operation search video is displayed from areas that protrude above a horizontal clearance plane established by the ground clearance control. The clearance plane is variable from 0 to 1500 feet below the airplane. Clearance planes may be selected independently by the pilot and copilot. The navigator has a control for his display.

PPI presentations are provided; the display format and the antenna scan modes are the same as described for the high altitude ground mapping mode. However, the following controls are inhibited in the contour map mode: TILT, RCVR GAIN, and STC. The primary contour mapping capability is provided by the X-band radar.

TERRAIN FOLLOWING/TERRAIN AVOIDANCE MODE. The terrain following/terrain avoidance mode is selected by rotating the MODE select switch to "TFTA." The primary TFTA capability is provided by the X-band radar, under control of the pilot or copilot. Terrain following is both manual and automatic through flight director or autopilot tie-in. Terrain avoidance is manual only.

In the TFTA mode, three types of information are displayed on the display. At the top of the 90° wide sector scan are two terrain ridge lines with a zero degree elevation reference line. The upper ridge line shows the elevation angle to the terrain versus azimuth angle ahead of the airplane out to 10 (or 5) miles. The lower ridge line shows identical information out to 5 (or 2.5) miles. The lower portion of the display shows a PPI contour map with a display range of 10 (or 5) miles. (At the center of the display are a pitch steering command bar symbol, an airplane pitch symbol, and a reference circle.) The clearance plane of the contour map display is 0.8 times the value on the clearance control.

To provide an enlarged view of the area being mapped, the pilot (or copilot if he is in control of the radar) can depress the TA/TF RANGE SEL switch on his control wheel. This changes the display range to 5 miles.

To provide an enlarged view of the area being mapped, the RANGE (NMI) selector switch should be placed to the "EXP-B" (expansion B-scan) position. This automatic range expansion display is optimized for precision crosshair positioning, which yields greater accuracy for navigation and radar approach. The EXP-B display is a velocity stabilized display. Therefore, the target automatically remains fixed in the center of the presentation even as the relative positions of target and radar change. Also, the display is expanded by a factor of at least 2 to 1 in range, compared to an offset sector radar scope, and is expanded in azimuth by an even greater factor.

If the target is at the intersection of the crosshairs, it will remain fixed at the center of the display and expand in both the azimuth and range axes as the range to target decreases. Because the horizontal display diameter represents 0.5 radian and the vertical diameter is 0.5 times the target range, the target is maintained at a 1-to-1 azimuth/range scale factor.

The EXP-B display is available for target ranges up to 50 nautical miles only. The display may be used in the RA, WX, MAP, CM, and BCN modes and can be selected or viewed only by the navigator, unless the pilot or copilot desires to repeat the navigator's display by selecting the "REP" position on the MODE switch. When the desired range is selected, the applicable range annunciator light on the pilot's or copilot's radar indicator panel comes on. The navigator does not have a choice of TF/TA display ranges. When he is in control of the radar, he can only view a 10-mile display. When the pilot has control, the navigator can only view the range scale selected by the pilot.

Terrain clearance settings from 200 to 1500 feet may be selected. The pilot and copilot are provided with digital readouts on the ground clearance counters. The navigator selects the ground clearance setting on the ground CLEARANCE (X100 FT) control. The position selected for the RIDE selector switch is determined

by the nominal airplane weight. This selection is interpreted by the analog computer as three discrete steady state climb and dive angles. A smooth ride can also be selected by placing the RIDE switch to "SOFT." This selection permits a low "g" peak-to-peak flight maneuver.

If the airplane comes within radar range of an obstacle which it could not avoid at the height set, a warning horn sounds and a red OBSTACLE light on the pilot's indicators comes on.

The pilots can optimize their displays by adjusting the VID GAIN, VID BRT, PERSIST, and MKR/CSR INT controls on the radar indicator panel. If the automatic or manual TF function should fail at any time the FAIL light on the pilot's and copilot's radar indicator panel comes on and maximum climb commands will be displayed on the pilot's scopes and ADI's, and the autopilot will receive a maximum climb command.

Note

Ground checkout of the TF/TA mode requires Aerospace Ground Equipment (AGE).

WEATHER MAPPING MODE. To optimize weather returns, the operator having control of the radar sets the MODE switch to "WX" and chooses a range to scan. While the pilots have fixed scan sectors, the navigator may vary the scan angle and can change the direction for the center of the scan by using the cursor control or the SCAN CTR control. The TILT control can be used to maximize the returns from the weather targets. The operators can optimize their displays by adjusting the VID GAIN, RCVR GAIN, INTENSITY and BRT (or VID BRT) controls on the radar indicator panels. Centers of high storm intensity may be identified by using the ISO ECHO control which creates a "hole" in the display for all returns exceeding the selected intensity.

Primary weather mapping capability is provided by the X-band radar. The polarization-sensitive reflector is illuminated with vertically polarized X-band energy to provide a pencil beam with a 2.2 - degree azimuth beam width and a 2.75 - degree elevation beam width. Manual control of reflector tilt permits positioning the pencil beam from 10 degrees above to 15 degrees below the horizontal. Iso-echo processing of the video signal is provided as an aid to determining storm intensity. The antenna scan capabilities and the displays available in this mode are identical to those described for the high-altitude ground mapping mode.

A back-up medium-to-high altitude weather mode is provided by the KU-band radar, by setting the reflector to the low-altitude ground mapping position. The KU-band radar provides excellent definition of the leading edge of weather disturbances. Azimuth definition of a weather cell is better than with the X-band radar, but penetration and subsequent definition of the trailing edge of a storm cell fall short of that achievable with the X-band radar. The better azimuth resolution and leading edge definition of the storm cells provided by the KU-band radar are valuable in situations where it is necessary to find the best course between closely spaced elements of a widely spread storm.

RADAR APPROACH MODE. The radar approach mode is selected by rotating the MODE selector switch to "RA" and selecting "RADAR" on the NAVIGATION SELECTOR panel. This selection automatically gives the navigator a ground mapping display from his radar. The desired glideslope angle is selected by rotating the GLIDESLOPE (DEG) selector switch on the navigator's radar set control panel. For this mode, the pilot should also select "REP" on his MODE switch.

Primary radar approach capability is provided by the KU-band radar. The ground map and interferometer channels of the radar are used simultaneously in this mode to measure range, bearing and depression angle to the cursor intersection. The X-band radar provides a back-up capability for the landing mode which is the same as the KU-band radar except that it has a larger azimuth beam width.

The location of the landing area is first taken from the primary digital computer after the navigator has either EXP-B selected or the sector scan is centered about the cursor. The computer causes the cursors to slew to a pre-determined position on the radar scope. The navigator, using this information and the known compass orientation of the landing strip, directs the pilot to a proper approach as far as heading is concerned. The pilot, using his display, can monitor the navigator's actions, while the copilot can select a contour mapping display for monitoring purposes.

As the precise position of the landing strip is located on the display, the navigator switches to EXP-B, and keeps his cursors on the leading edge of the target by making corrections with the cursor control as necessary. The glideslope computer generates a deviation signal which is displayed to the pilot on the ADI. As the glideslope is approached, the deviation signal grows smaller and approaches zero. From this point on, the navigator assures that his cursors are properly positioned and that the azimuth approach angle is correct, while the pilot keeps the deviation zeroed and watches for visual contact with the ground. After contact is made, the pilot assumes full control, decrabs and flares out manually.

During the radar approach, the copilot may use the contour map, low altitude ground map, weather, or monitor radar approach modes as required.

If a failure of the system occurs during the radar approach, the FAIL light on the radar indicator comes on in the same manner as when in the terrain following mode.

RADAR BEACON IDENTIFICATION MODE. The radar beacon mode is selected by placing the MODE selector switch to the "BCN" position. In this mode, normal ground target signals are rejected and only coded signals from radar beacon transponders are accepted. Positions of repeater beacons can be initially displayed by the computer controlled cursors on any of the ground mapping display formats. When the beacon responses on the radar scope are located, the 20-mile delayed display may be used to magnify the return and permit its identification. The cursor control may be used to update the computer as previously described for other types of checkpoints. Stationkeeping, using signals from airborne transponders may also be accomplished as a backup mode only.

STATIONKEEPING DISPLAY MODE. The stationkeeping display mode is selected by rotating the MODE selector switch to "SKE." The SKE mode substitutes data from the stationkeeping equipment for normal radar returns on the radar indicators. This mode may be selected at any time data is available. The operator can select the most useful "2-30/5," "2-30/1" or "SKE 1.5/1/3" mile range on the RANGE (NMI) selector switch for the current situation. The "2-30/5" and "2-30/1" positions will present a 20-mile range. No other radar controls are involved except the indicator viewing controls. The SKE display has a 360 degree scan.

REPEAT MODE. The REP mode permits the operator to view the video obtained from the other radar.

Multi-Mode Radar Set Test Procedures.

The go-no go condition of the MMR sets is tested by built-in test equipment (BITE). The BITE provides checks of flight safety functions for fail-safe operation, and provides signals to the MADAR subsystem. Signal inputs from the peripheral equipment are required to accomplish the BITE tests.

Refer to Section IV for radar set test procedures.

MMR Stabilization.

The primary source of MMR pitch and roll axis stabilization is the IMU. Whenever the IMU attitude (roll and pitch) information is invalid AHRU No. 2 is utilized to control the position of both axes.

The validity of the IMU attitude information is determined within the primary or auxiliary computer. A valid attitude signal will allow the MMR to be stabilized by the IMU. An invalid attitude signal will transfer the stabilization source from the IMU to AHRU No. 2.

ROLL AXIS STABILIZATION. For the roll axis to operate properly it requires both attitude information and an attitude validity from the same source. The lack of either input will cause the roll axis to cage (zero-degree position) itself automatically. The roll axis will also cage if there is an internal failure of the common roll assembly to respond to the attitude information.

The start of the caging sequence can be observed on the Navigator Control Panel by both X and K NO GO lights illuminating simultaneously (both radars must be in standby, map mode and manual tune). The automatic caging of the roll axis occurs after one minute from receiving an invalid condition. During the period of an invalid condition and automatic caging the roll axis continues to respond to the positioning information. If the invalid condition corrects itself during the one minute, the NO GO lights will extinguish and stabilization will be maintained.

Assuming the invalid condition has been corrected and a time period of longer than one minute has elapsed the roll axis can be uncaged by turning both radars Function Switch to "OFF", then to "STANDBY." The NO GO lights will go off 3 minutes after "OPR" is selected.

Improper roll position information or a caged roll axis can be observed on the MMR Indicators. Slight errors in roll position can be seen when the receiver gain is reduced and targets on one side of center are stronger than the targets on the other side of center. A caged roll axis will cause a hooked video line in range when in map mode as the airplane bank angle is increased.

PITCH AXIS STABILIZATION. Stabilization of the pitch axis is done in much the same manner as the roll axis, with the exception of caging. Caging sequence is used only in the roll axis. Once the position information is received by the pitch axis it will respond to it. If the pitch information is not within the pitch axis mechanical limits or the pitch axis cannot internally respond to the information, the NO GO light(s) will illuminate on the Navigator's Control Panel (both radars must be in standby, map mode and manual tune). When the pitch axis is at one of its mechanical limits the NO GO lamp will flash. Once the pitch position information has corrected itself the pitch axis will resume normal stabilization.

Visual indications of incorrect pitch axis positions can be seen on the MMR indicators when in map mode. Slight errors in the pitch axis will cause the operator to use higher or lower settings of antenna tilt angles. When the pitch axis is at its mechanical limits the antenna tilt angles will be excessive and the video will be scalloped in range.

Multi-Mode Radar Normal Operation.

To set up the MMR sets for normal operation, the navigator accomplishes the following:

1. Rotate the X-radar FUNCTION switch to "STBY."

Allow the radar set to warm up for at least two minutes.

2. Rotate the FUNCTION switch to "OPR."

In the operating mode, the flight safety functions are continuously monitored, and the NO GO light on the navigator's radar set control panel comes on if any function in the X-radar set becomes inoperative.

To turn off the X-radar set, rotate the FUNCTION switch to "OFF."

The K-radar set is operated in the same manner as the X-radar set.

RENDEZVOUS RADAR BEACON SET.

This set is an airborne X-band radar beacon used as a navigational aid to rendezvous with a tanker, for inflight refueling. The beacon transmits a coded reply in response to beacon interrogation signals from an X-band radar. The reply identifies the interrogated airplane in accordance with a predetermined code. Dashes, in accordance with the code, appear on the radar scope of the interrogating airplane. Range and bearing can be determined from the display.

The radar beacon set consists of a radar receiver-transmitter located in the vertical stabilizer, a control panel (figure 1-105) and an antenna assembly (figure 1-82). The radar beacon set receives 115-volt AC bus no. 2 (figure 1-69).

Rendezvous Radar Beacon Set Controls and Indicators.

The controls and indicators for the set are on the RENDEZVOUS RADAR BEACON control panel (figure 1-105) located on the navigator's console and are described as follows:

POWER SELECTOR SWITCH. The power selector switch is used to turn on, warm up and operate the radar beacon set. Rotating the switch to the "STBY" position, supplies power to all but the high voltage circuits in the set. Unless the set has warmed up for at least two minutes, the beacon set will not transmit. If the switch is rotated to "ON" before selecting "STBY," power will be supplied to all circuits, but the set will not operate until the warm-up period is over. In "STBY," an audio tone denotes that the airplane is being interrogated but is not replying.

CODE SELECTOR SWITCHES AND LIGHTS. Eight, lever-lock, two-position (up-ON, down OFF) Code selector switches are used to set up code combinations in the radar beacon set. Placing a combination of the switches to the up position, after the set is operating, transmits that selected code after being properly interrogated.

As each switch is actuated, the associated CODE indicator light located above the applicable switch comes on to indicate that the selected code combination is set in and ready to be transmitted upon interrogation. The first (left-hand) code indicator light comes on any time power is applied to the set. The left-hand code is not selectable as it is a part of the selected code and is used to determine range. The dimming switch on the navigator's LIGHT CONTROL panel controls the brightness of the code lights.

SELF-TEST PUSHBUTTON AND LIGHT. A TEST pushbutton is used to initiate a self-test of the set. Depressing the pushbutton with the power selector switch in the "ON" position, starts the test. If the test is successful, the TEST light should come on bright and an audio tone should be heard.

Rendezvous Radar Beacon Set Normal Operation.

The following procedures are used to put the radar beacon set into operation.

1. Place all the code selector switches to the down (OFF) position.

2. Rotate the power selector switch to "STBY."

The radar beacon set is ready to operate in approximately two minutes.

3. Rotate the selector switch to "ON."

4. Place the applicable code selector switches, for the assigned code, to the up (ON) position.

Note

If a code selector light does not come on, that particular part of the code combination will not be transmitted.

5. Pull out the RV BCN intercom switch to monitor the radar beacon set.

If an audio tone is heard while the set is operating, the set is replying to an interrogation.

6. Rotate the power switch to "STBY" if it is desired to discontinue operation temporarily. If an audio tone is heard, with the switch in "STBY," an interrogation is being received but the beacon is not responding.

Note

The radar beacon set may occasionally shut down. This should not be considered a malfunction. This type of shut-down can be restored to normal operation by cycling the power switch to "OFF" and back to "ON" and allowing two minutes for warm-up. Should this procedure not restore the set to normal operation, a true malfunction has occurred.

The following procedures are used to turn off the radar beacon set:

1. Place the code selector switches in the down (OFF) position.

2. Rotate the power switch to "OFF."

STATION KEEPING EQUIPMENT (SKE) SUBSYSTEM.

The SKE subsystem installed in this airplane is designed to allow up to 59 airplanes to maintain a desired separation from each other while in formation. The SKE operates as a simultaneous range tracking and 360 - degree PPI display system and presents to the crew members a digital readout of slant range separation between their airplanes and any other selected airplanes in the front 180 - degree sector of the formation. The multi-mode radar scope is used by the SKE to display the formation array in the horizontal plane. The range of the formation is slant range regardless of relative position or altitude separation.

CAUTION

Caution should be exercised in interpreting this display, because airplane separation shown on the display is actually slant range. The approximation of interpreting slant range as horizontal separation is valid only if the altitude difference is less than one-half the slant range.

This display is stabilized to ground track, using drift information from the primary computer or the Doppler radar of the IDNE. The SKE also provides an input to the speed indication pointer on the ADI.

To permit such a large number of airplanes to fly in a single formation together, time sharing methods are used on a single transmitting frequency. Range measurements are accomplished by establishing time synchronization of all SKE's in the participating airplanes and measuring the propagation time of each airplane beacon transmission within its allotted time slot. Although each airplane is identified by an assigned number, the SKE does not require the assignment of a "master" station or airplane. Instead, an "all-master" system of synchronization is used. This feature allows a formation to be maintained independently of any other airplane within the formation. However, in large formations, the airplanes should be positioned in a general ascending numerical order to facilitate faster synchronization over long ranges.

Range tracking is limited to a maximum of 29,000 feet, or approximately five miles. The maximum radar scope display range is 20 miles. The variable radar scope ranges used by the multi-mode radar are utilized by the SKE. In addition, a special 1-1/2 mile fixed range display is provided for short range operations. On the variable range scale, 1-mile and 5-mile markers are available, and 1/3-mile (2,000 feet) markers are provided for the fixed 1-1/2-mile scale.

The SKE also can be used to identify any airplane in the formation by setting in the number of the airplane with the thumbwheel switches on the control panel. The airplane selected will be identified on the radar scope by highlighting the synthetic video on the radar scope display for that airplane.

The SKE consists of a synchronizer, two receiver-transmitters (R/T), two antenna assemblies, two BITE antennas, two range indicators, and a control panel. Two R/T units and two antennas are required to achieve 360-degree azimuth coverage. The synchronizer establishes the basic synchronization of timing with other airplanes, determines and directs the activity necessary by the R/T units during each synchronizing and range slot, and contains the range counters and airplanes identification circuits.

The SKE subsystem receives 115-volt AC power from the avionics AC bus No. 1 (figure 1-69).

SKE Controls and Indicators.

Controls and indicators for the SKE subsystem are located on the navigator's console, the pilot's and copilot's main instrument panels, the pilots' center instrument panel, the center console, and the copilot's side console (figure 1-106).

The following controls are located on the station keeping control panel located on the center console and described below:

SKE POWER SELECTOR SWITCH. The POWER toggle switch turns on the SKE when placed to "ON." Placing the switch to "OFF," removes power from the SKE.

PPI AIRPLANE IDENTIFICATION THUMBWHEEL SWITCHES. Two PPI ACFT IDENT thumbwheel switches are rotated forward or aft to set in any number from "00" to "59." The number "00" is the BITE test number and cannot be used for an airplane in formation. Selection of this number highlights each fourth mile BITE target when BITE "TEST 1" is selected. The tens digit thumbwheel has a 0-5 range and the units thumbwheel a 0-9 range. If the airplane with identification number is within range, it will be identified on the PPI display by a multiple blip or highlighting effect.

TRACK AIRPLANE IDENTIFICATION THUMBWHEEL SWITCHES.

Two TCK ACFT IDENT thumbwheel switches are rotated forward or aft to set in any number from "00" to "59." The number "00" is the BITE test number and cannot be used for an airplane. When BITE "TEST 1" is selected, track airplane identification number "00" is automatically selected internally. The tens digit thumbwheel has a 0-5 range and the units thumbwheel has a 0-9 range. If the airplane with this identification number is within range and in the forward (180 - degree) hemisphere, slant range measurement will be continuously displayed on the SKE range indicator.

DESIRED RANGE THUMBWHEEL SWITCHES.

Three DESIRED RANGE thumbwheel switches are rotated forward or aft to set in any range in feet from zero to 29,900. The first (ten thousand digit) thumbwheel has a range of 0-2. The next two (thousands and hundreds) have a range of 0-9. The last two digit displays are fixed zeros. The actual range is displayed on the SKE range indicator.

OWN AIRPLANE IDENTIFICATION THUMBWHEEL SWITCHES.

Two OWN ACFT IDENT thumbwheel switches are rotated forward or aft to set in any number from "00" to "59." The tens digit thumbwheel has a 0-5 range and the units digit thumbwheel a 0-9 range. The number selected for a particular airplane determines the cycle during which each airplane transmits the synchronized identification signal and establishes the corresponding position in the flight. "00" is the R/T self-test function and will cause the BOTH R/T FAIL light to be displayed on the SKE range indicator.

FLIGHT CODE THUMBWHEEL SWITCH.

A single FLT CODE thumbwheel switch is rotated forward or aft to enter a flight code number. All airplanes in the formation use the same code. The present configuration limits this switch to seven codes, 1 through 7. These codes may be used to separate two formations, or to achieve a nominal level of communication privacy.

BUILT IN TEST SWITCH.

The BUILT IN TEST momentary-type toggle switch (figure 1-106) is used to accomplish the SKE subsystem BITE. The BITE switch is held in the "TEST 1" position for the SKE system Test. The "TEST 2" position starts the resynchronization test. Refer to SKE Subsystem Test Functions and Procedures paragraph in this Section for further information on the BITE switch.

MULTI-MODE RADAR MODE SELECTOR SWITCH.

The seven-position MODE selector switch (figure 1-104), discussed in the Multi-Mode Radar Subsystem paragraph must be rotated to "SKE" to provide external video signals from the SKE to the radar scope. These signals are presented for display on the radar scope. These signals are presented for display on the radar scope through the "SKE/1.5" "2-30/1" and "2-30/5" positions of the multi-mode radar RANGE (NMI) selector switch. Although "2-30/1" and "2-30/5" are selected, the actual SKE range for these positions will result in a "2-20/1" and "2-20/5" usable range display. This switch is discussed under the same paragraph as the MODE selector switch.

The following is a description of the components on the SKE range indicator located on the pilot's and copilot's main instrument panels above the ADI's.

Window No. 1 (left-hand) displays the following annunciators:

AFT R/T FAIL	- Failure of aft receiver/transmitter, antenna and/or related components.
FWD R/T FAIL	- Failure of forward receiver/transmitter, antenna and/or related components.
BOTH R/T FAIL	- Failure of both receiver/transmitter, antennas and/or related components.
	- This indication will be illuminated until both R/T units have warmed up (approximately one

minute) and when the own airplane identification number is equal to "00".

DRIFT OUT - Displayed only if the receiver/transmitter is operating and the PPI is not drift stabilized.

GREEN SHUTTER - None of the above.

Window No. 6 displays the following annunciators:

SYNC FAIL - A synchronization failure exists in the SKE synchronizer.

NO SYNC - No synchronization signals are available from other airplanes.

IDENT ERROR - Displayed only if the own airplane is in synchronization and transmissions from another airplanes with the same "OWN ACFT IDENT" are received from the forward sector during own airplane time slot. Intermittent IDENT ERROR may occur during ground operations due to reflected SKE transmissions.

GREEN SHUTTER - The system is in synchronization with another airplane.

A rotary DIM KNOB adjacent to window No. 6 is used to adjust the integral lighting intensity of the panel.

The following is a description of the SKE displays provided by the radar scopes at the pilot's, copilot's, and navigator's stations:

When the radar scope is in the SKE mode, the plan-position situation of all airplanes within range is displayed as illuminated blips against a background of annular range markers. This display is presented on the pilot's, copilot's, and navigator's radar scope. To prevent distortion at short ranges, a maximum of two stations should select SKE. Total display range and distance between range markers is adjusted with the appropriate controls on the multi-mode radar panels. In the drift stabilized display, the ground track coincides with the vertical diameter of the radar scope.

One airplane at a time may be selected for identification by highlighting when the airplane number is set in with the PPI ACFT IDENT thumbwheel switches. The intensity of the highlight is controlled by the MKR/cursor intensity knob.

SKE Subsystem Test Functions and Procedures.

The BITE No. 1 test for the SKE procedures a standard set of target airplane signals to test the RT functions of the SKE antennas and receivers in particular, and to test the general response of the entire subsystem. The BITE presents these target signals on the PPI's and the slant range to one of the BITE targets on the range indicators. These displays are used by the operator for a quick check of the SKE, and by the MADAR for malfunction isolation.

The BITE test is normally used as a preflight and post flight test, but may be used as an inflight test as well. To initiate the BITE test proceed as follows:

1. Place the SKE subsystem POWER switch "ON".

2. Rotate the multi-mode radar MODE selector switches to "SKE".

3. Rotate the multi-mode radar RANGE NMI selector switch to "2-30/5".

4. Rotate the VAR/DLY control clockwise to maximum range.

5. Place and hold the BUILT-IN-TEST switch to the "TEST" position. If BITE ("TEST 1") is successful, the following displays will be presented:

a. The range indicator windows two through five will display 28,000 (-100) feet.

b. The MMR indicators will display a row of targets at approximately 95 degrees and a second row of targets at approximately 290 degrees. The minimum number of targets displayed in each row will be the three- and four-mile targets and the 12- through 20-mile targets, spaced at one-mile intervals.

Note

If the MMR displays are drift stabilized, the target azimuth will be rotated by the drift angle. BITE PPI data is not meaningful when the system is in synchronization with other aircraft.

c. The polarity of the fast/slow indicator on the ADI is correct if the desired range on the control panel is set to 28,200 feet, the "BITE TEST 1" position is selected, and the fast/slow indicator indicates plus (+). If 27,800 feet is set in as the desired range, the "BITE TEST 1" is selected, the fast/slow indicator will indicate minus (-).

6. Place and hold the test switch to the "TEST 2" position. If the system is in synchronization and the BITE switch is held in the "TEST 2" position for 10 seconds, the system will go out of synchronization and the NO SYNC light in window No. 6 will come on. When the switch is released the system will normally re-synchronize. The PPI range marks will not be displayed during "TEST 2".

7. Place the SKE subsystem POWER switch to "OFF".

In addition to the BITE, the synchronizer and receiver/transmitter unit continuously performs a self-test of certain logic operations and receiver/transmitter transmissions to check the reliability of the SKE performance. Displays of important unreliable conditions are provided to the pilot and copilot on the range indicator.

The synchronizer logic circuits perform a number of logic operations to determine from five self-test input signals that the subsystem has experienced an internal failure, or, that no airplanes are available for synchronization, the No. 6 window displays NO SYNC.

In addition, the self-test logic circuits process the IDENT ERROR, DRIFT OUT, AFT R/T FAIL, FWD R/T FAIL, and BOTH R/T FAIL for display in windows No. 1 and 6 of the range indicator. An IDENT ERROR signal will be displayed in window No. 6 when a validated range video signal is received in own airplane ranging slot. DRIFT OUT is received as a validity signal from the IDNE for display in window No. 1. The R/T fail indications are displayed in the No. 1 window for forward and aft transmitter-receiver unit tests.

The R/T fail lights indicate a malfunction of the transmitter components in the respective R/T unit.

SKE Subsystem Normal Operation.

The SKE subsystem is used in conjunction with the IDNE and the MMR. The SKE PPI displays are available when either MMR FUNCTION selector switch is in any position other than "OFF". These two subsystems supply drift and validity signals and PPI facilities respectively. SKE may be used without IDNE, but the PPI display will not be drift stabilized.

Normally, SKE displays are used and controlled by the pilot and copilot, although the navigator may select the SKE PPI display, if required. A SKE display may be obtained by selecting the "SKE" mode on the pilot's or copilot's MMR control panels or on the navigator's indicator.

To set up the SKE for normal operation, proceed as follows:

1. IDNE and MMR - SET.
2. Own Airplane Identification - SET TO OWN AIRPLANE IDENTIFICATION NUMBER.
3. Airplane Flight Code - SET.
4. SKE POWER Switch - ON.
5. PPI Airplane Identification - SET.
6. Track Airplane Identification Number - SET.
7. Slant Range in Feet - SET.

When an airplane identification number and desired range are set in, the SKE will identify that airplane and measure the distance between it and the interrogating airplane. The range is displayed on the SKE range indicators. If the actual range and desired range differ, the difference is displayed on the speed command indicators located on the ADI's. Full-scale deflection in the fast and slow directions corresponds to a separation distance of 500 feet. Approximate range error, in feet, can be read out at any point on the indicator where the half-scale mark equals 250 feet.

The speed deviation indicator, on the ADI (18, figure 1-110), indicates the airplane speed relative to a preselected VSFI command speed or station Keeping position. The minus (-) indicates that the airplane is slower than the selected speed or the station Keeping distance is greater than selected and an increase in speed is required. The plus(+) indicates that the airplane is faster than the selected speed or the station Keeping distance is less than selected and a decrease in speed is required. Each graduation is in ±125 feet in the SKE mode.

ATTITUDE AND HEADING REFERENCE UNITS (AHRU).

Two independent AHRU's provide primary heading and attitude information to the following airplane subsystems:

AHRU No. 1	AHRU No. 2
ADI No. 1 - Attitude	ADI No. 2 - Attitude
Autopilot - Both	Autopilot - Both
Auto-Throttle - Attitude	Auto-Throttle - Attitude
BDHI-Copilot - Heading	BDHI-Navigator - Heading
BDHI-Navigator - Heading	BDHI-Pilot - Heading
CDPIR - Both	Doppler - Attitude
	FDS No. 2 - Attitude
FDS No. 1 - Attitude	GO-Around - Pitch
GO-Around - Pitch	HSI No. 2 - Heading
HSI No. 1 - Heading	IDNE - Both
IDNE - Both	Multi-Mode Radar - Heading
TACAN No. 1 & 2 - Heading	TACAN No. 1 & 2 - Heading
VOR No. 1 & 2 - Heading	VOR No. 1 & 2 - Heading
Flight Augmentation - Attitude	Flight Augmentation - Attitude

WARNING

Selection of the IMU for the pilot's and copilot's heading and attitude displays will leave the VOR and TACAN bearings referenced to their associated AHRU. The VOR and TACAN displays will be in error if their associated AHRU is in error.

The AHRU's are also used for navigation reference applications. The units are capable of operating independently in a magnetic slaved mode, directional gyro, or direct compass mode. Automatic magnetic synchronization is provided when in the SYNC mode.

The AHRU's are designed to minimize errors due to the earth's rotation, magnetic meridian convergence, the earth's horizontal magnetic field strength, coriolis acceleration, index error, one cycle deviation, and two cycle errors effects. The AHRU's receive velocity information from the IDNE or CADC's that is used to compensate for the earth's profile and the error due to coriolis acceleration. Lateral and longitudinal accelerations are also computed from velocity and turn rate, and are used to correct the vertical gyro erection signals and to "cut-out" the magnetic input during maneuvers where the magnetic azimuth detector will provide erroneous information. Each AHRU consists of a flight reference platform, controller electronics coupler, and magnetic azimuth detector and control panel.

Attitude and heading information, provided by the AHRU's to the pilot's and copilot's ADI's, HSI's and BDHI's, is monitored by the Heading and Attitude Monitor System (HAMS) described in this section.

The No. 1 AHRU receives 115-volt and 26-volt AC power from the emergency AC bus (figure 1-61).

It also receives 28-volt DC power from the isolated avionics DC bus (figure 1-69).

The No. 2 AHRU receives 115-volt AC power from the No. 2 avionics AC bus, 26-volt AC power from the No. 2 navigation AC bus, and 28-volt DC power from the No. 2 avionics DC bus (figure 1-69).

AHRU Controls and Indicators.

All operating controls and indicators for the AHRU's are located on the AHRU controller panels (figure 1-107). Five instrument ground switches (GRD SW) are provided to turn off the AHRU's and other selected flight instrument equipment whenever they are not needed. The description and function of the AHRU controls are given below.

VERTICAL GYRO ERECTION SWITCH. The VERT switch (2) is used to select either of two vertical gyro erection modes which are provided in the AHRU. Rotating the switch to "NORM" electronically controls the vertical gyro. This is the most accurate mode and is the normal mode of operation. An alternate mode of operation is provided by the "EMERG" position of the switch. In this mode, all erection of the vertical gyro is self-contained inside the gyroscope assembly, and can be used with many of the electronic coupler circuits inoperative. A degradation in accuracy occurs in this mode as no turn compensation or cutout is provided.

In certain cases, heading errors may develop when operating in the emergency mode. In this event, the AHRU should be switched to the DG mode. The other AHRU, IMU and standby compass should be cross-checked to determine the correct heading to be set on the affected AHRU.

HEMISPHERE SELECTOR SWITCH. The hemisphere selector switch (3) is used to determine the direction of the earth's rate compensation signal to the directional gyro (DG). The switch should always be kept in the "N" (north) or "S" (south) position which corresponds to the hemisphere in which the airplane is located. This switch is effective in the DG and slave modes.

MODE SWITCH. The mode switch (1) selects the heading mode of operation of the AHRU's. Refer to the "AHRU Modes of Operation" paragraph in this section for a detailed description of the switch/mode operation.

NAVIGATION SET KNOB. The NAV SET knob (7) is used to manually change the AHRU heading outputs only in the DG mode. Refer to the AHRU Modes of Operation paragraph in this section for a detailed description of the knob/mode operation.

LATITUDE SET THUMBWHEEL. A thumbwheel (6) is rotated up or down to change the latitude readout on the LATITUDE correction indicator to coincide with the airplane latitude. Refer to the "AHRU Modes of Operation" paragraph in this section for a detailed description of the thumbwheel/mode operation.

SYNCHRONIZATION INDICATOR. A pointer on the SYNC IND (4) is used to check the synchronization of the AHRU's. Displacement of the pointer to the left or right of the center bar indicates that the AHRU is not synchronized. The AHRU can be resynchronized by rotating the mode switch to "SYNC" and leaving it there until the pointer is under the center bar. The mode switch can then be rotated back to the slave mode. This indicator is operative in the slave, compass and sync modes.

Note

Slight variations of the needle about zero while inflight are normal and indicate that the system is active. During turns and accelerations or decelerations, an initial deflection will be noted, followed by a slow return toward zero, indicating that the slaving cutout is functioning.

LATITUDE SET INDICATOR. A two-digit latitude set indicator is connected to the latitude correction thumbwheel to indicate the set latitude in degrees. The right digit indicator displays the unit and tenths of units.

AHRU Modes of Operation.

The AHRU's can be operated in either of the three heading modes described below by placing the mode switch to "CMPS," "DG," or "SLAVE."

COMPASS MODE (CMPS). The direct compass mode is an emergency mode used only in the event of directional gyroscope failure. In this mode, the AHRU's provide undamped magnetic azimuth information. Due to the oscillating nature of the magnetic detector signal, the autopilot should not be operated when AHRU No. 1 is in this mode.

In the event the compass mode is selected, the GYRO warning flag for the associated ADI will come into view about 20 seconds after the mode is selected. In addition, should the flight director heading mode be selected, while in the compass mode, the respective flight director (FD) warning flag will come into view about 20 seconds after this mode is selected.

If the compass mode is selected, inaccuracies of the system may exceed the HAMS comparator trip tolerances and cause the system to indicate a fault.

DIRECTIONAL GYRO MODE (DG).

Note

When switched to the DG mode, the compass heading will go to one of ten sectors closest to previous heading (sectors are approximately every 36 degrees).

In this mode, the AHRU's provide gyro heading independent of magnetic datum. When this mode is initially selected, the correct heading must be set in using the NAV SET knob. To make this adjustment, the NAV SET knob is rotated until the desired heading is read on the corresponding indicator (BDHI). Any north reference may be used to determine the heading desired. The three most common headings are: true, magnetic, and polar grid.

Note

In the event of a heading malfunction of an AHRU in the slave mode, the affected AHRU should be switched to the DG mode and referenced to magnetic north by setting the best derived heading. Periodic resetting will be required in this type operation because of gyro drift.

Earth rate correction must be made in the DG mode. The hemisphere selection should be made to correspond to the hemisphere in which the airplane is flying. The airplane latitude is then set by using the latitude set thumbwheel. Periodic resetting of the latitude is normally made every 2 degrees to maintain maximum accuracy.

SLAVE MODE (SLAVE). In the slave mode, the AHRUs operate as a gyro-stabilized, compensated magnetic compass. In this mode, magnetic heading is displayed on the instruments. This mode is normally used at all times below 70 degrees latitude.

Note

Prior to switching to this mode, the sync mode should be selected until the synchronization needle is within two needle widths of center. Whenever the AHRU is operating in the slaved mode and is synchronized, the heading outputs are automatically referenced to the sensed magnetic heading.

In level flight, both the magnetic azimuth detector and the directional gyroscope are used to derive the proper heading. The outputs are continuously referenced to the sensed magnetic data. During turns, and decelerations or accelerations above certain cutoff levels, the magnetic detector, which would sense an erroneous magnetic field, is decoupled or cut out. Under these conditions, the AHRU operates as a free gyro compass, using the previously sensed magnetic heading as a reference.

The slaving function normally maintains the system in an adequately synchronized condition. In some cases, however, either a heading error or large synchronization needle deflection may develop. In this case, the airplane should be maintained in level flight and the synchronization mode selected. This will start a fast slaving cycle which will re-synchronize the system to magnetic north.

Note

Once the system is synchronized, it should be returned to the slave mode. The system will not synchronize 180 degrees out of phase. If the sync mode fails to synchronize, the mode switch should be placed to "DG" and the heading set in manually with the NAV SET knob. Return the mode switch to "SLAVE."

Compensation for earth rate must be made by periodic (normally every 2 degrees) resetting of the latitude set thunbwheels in this mode to maintain maximum accuracy. The operator selects the hemisphere and latitude corresponding to the airplane position.

AHRU Operational Characteristics.

When EMERG mode and flying at night or under IFR conditions the following procedures and limitations should be observed.

(1) The ADI bank indication is affected by forces acting on the AHRU vertical gyro in turns and will indicate less than actual bank. The amount of error will accumulate at an average rate of one degree per minute while in the turn. A shallow bank for five minutes will result in approximately five degrees bank error. The error will decrease from 5 degrees to zero degrees in approximately two minutes after return to straight and level flight. If the airplane is accelerating or decelerating during the turn, an additional bank error of approximately one degree per minute will result. The pitch reference of the ADI will also be affected by airplane accelerations and decelerations. The amount of error will accumulate with time at a rate of two degrees per minute and will return to zero error at the same rate after attaining a constant speed. During normal take-offs, the ADI's should indicate approximately 11 degrees to attain a 10-degree pitch attitude climb at rotation.

(2) A flight augmentation system fault (YAW AUG FAULT AND LATERAL AUG FAULT lights on) may also occur during maneuvering flight if the IMU is on and the flight augmentation system is engaged. The erroneous attitude reference will be printed out on the MADAR (AUTO SAR).

(3) If the ADI attitudes disagree in pitch with the pitch trim knobs set to the same position, cross-check these attitudes with all available instrumentation to determine which ADI is correct in pitch. The pitch references should always be cross monitored following turns, accelerations and decelerations.

AHRU Preflight Checks and Grid Heading Adjustment.

Refer to the Navigator's Interior Inspection, Section IV for preflighting the AHRU's, checking them with the IDNE and for grid heading adjustment.

AHRU Normal Operation.

Instrument ground switches are incorporated in the AHRU subsystems. The AHRU No. 1 system is operated by Emergency AC Bus instrument ground switch on the pilot's emergency circuit breaker panel (figure 1-61) and the Avionics Iso DC Bus instrument ground switch on the navigator's circuit breaker panel No. 1 (figure 1-69). The AHRU No. 2 system is operated by the Avionics AC Bus 2, Avionics DC Bus 2, and 26 VAC Nav Bus 2 instrument ground switches on the navigator's circuit breaker panel No. 2 (figure 1-69).

Note

These switches should be turned on only after ground power, APU, or engine power has been applied and allowed to stabilize. Switching of power thereafter should be minimized. The instrument ground switches powering AHRU's should be turned off prior to electrical power shutdown or removal of power in any manner.

CAUTION

Removal of 115-VAC power from the AHRU and reapplication within five minutes may result in serious damage to the units. If 115-VAC power is lost in flight the airplane should be maintained in level flight (within ±5 degrees pitch and roll) if possible during the period that the power is off and during reapplication of power.

HEADING AND ATTITUDE MONITOR SYSTEM (HAMS).

A Heading and Attitude Monitor System (HAMS) is installed to provide automatic and continuous comparisons of the AHRU attitude and heading data supplied to the ADIs, HSIs, and BDHIs with attitude and heading data from the IMU. In the event of failure of an attitude or heading data source, the system provides an indication of the failure and enables an alternate data source to be selected. The system consists of a monitor and switching unit, one control panel each for the pilot and copilot, and system fault and annunciator lights.

The system receives 28-volt DC power from the avionics DC bus No. 2, 26-volt AC power from the 26-volt AC nav buses No. 1 and 2, and 115-volt AC power from the avionics AC bus No. 2 (figure 1-69).

HAMS Comparator.

The HAMS comparator is installed in the No. 1 avionics bay (figure 1-81). This unit contains the servo repeaters required for the IMU heading and attitude data, switching circuits to permit input selections from the pilot's and copilot's HAMS control panel (figure 1-107), and comparators to monitor heading and attitude data.

Pitch signals presented to the pilot's and copilot's ADI's are compared to the IMU pitch signals. Roll signals presented to the pilot's and copilot's ADI's

are compared to IMU roll signals. Heading signals presented to the pilot's and copilot's HSI's are compared to IDNE heading signals. The comparators are set to trip whenever heading inputs to the HSI and BDHI differ by more than 6 (±1) degrees from the IMU heading outputs and whenever roll or pitch inputs to the ADI differ by more than 4 (±1) degrees from the IMU roll and pitch outputs. A comparator trip causes the appropriate annunciator and HAMS control panel lights to come on to indicate the specific malfunction and the appropriate ADI, HSI and BDHI warning flags to be displayed. If two comparators trip in a common axis, this is interpreted as an IMU failure and the appropriate annunciator and HAMS control panel lights come on to indicate the specific malfunction and the appropriate ADI, HSI and BDHI warning flags to be displayed. In the event of a power failure to the monitor and switching unit, the system automatically switches to provide No. 1 AHRU signals to the pilot's ADI, HSI, flight director, CDPIR, and the copilot's BDHI; and No. 2 AHRU signals to the copilot's ADI, HSI, flight director and the pilot's BDHI. In addition, signal monitoring becomes inoperative and is indicated by the HAMS INOP light coming on and control of the ADI, HSI, and BDHI warning flags is returned to the normal system validity circuits.

HAMS Controls and Indicators.

Two HEADING ATTITUDE MONITOR CONTROL panels (figure 1-107), one each for the pilot and copilot, are installed on the center console. Each panel contains an input select switch, a BITE switch, and three fault lights (HEADING FAULT, ATTITUDE FAULT, IMU FAULT). A HAMS INOP light and an AHRU FAULT light are installed on the pilot's annunciator panel (figure 1-128).

INPUT SELECTOR SWITCHES. Two, two-position, lever-lock switches, one each on the pilot's and copilot's HAMS control panels (figure 1-107), allow the pilot or copilot to select AHRU or IMU data for his displays.

BITE SWITCHES. Two, two-position, lever-lock switches, one each on the pilot's and copilot's HAMS control panels (figure 1-107), allow the pilot or copilot to test the heading and attitude monitor system. With both pilot's and copilot's input selector switches in the "AHRU" position, placing and holding the BITE switch to the momentary "TEST" position test the fault lights on the HAMS control panel, the AHRU FAULT and HAMS INOP lights on the pilot's annunciator panel (figure 1-128), correct comparator unit operation, and the appropriate ADI, HSI, and BDHI warning flags. Releasing the BITE switch to the spring-loaded, lever-locked "OFF" position terminates the test.

When a BITE test is performed with a HAMS input selector switch in the "IMU" position, the associated HSI and BDHI compass cards will slew to a heading greater than was initially indicated and the ADI will indicate a climbing turn to the right.

In flight, with the autopilot engaged in a horizontal navigation mode and the pilot's HAMS input selector switch in the "IMU" position, placing either HAMS BITE switch to "TEST" will cause the airplane to turn and follow the compass card movements commanded by the BITE signal.

HAMS CONTROL PANELS DIMMING SWITCH. The HAMS control panels are dimmed or brightened by using the pilot's annunciator panel INDICATOR LIGHTS dimming switch (figure 1-128).

HEADING FAULT LIGHT. The HEADING FAULT light on each HAMS control panel (figure 1-107) comes on whenever the compared signals differ by more than 6 (±1) degrees of heading. A HEADING FAULT light will be accompanied by warning flags on the instruments displaying discrepant data and by either the AHRU FAULT light on the pilot's annunciator panel or by the IMU FAULT light on the HAMS control panel.

ATTITUDE FAULT LIGHT. The ATTITUDE FAULT light on each HAMS control panel (figure 1-107) comes on whenever compared pitch or roll signals differ by more than 4 (±1) degrees. An ATTITUDE FAULT light will be accompanied by warning flags on the instruments displaying discrepant data, and by the AHRU FAULT light on the pilot's annunciator panel or the IMU FAULT light on the HAMS control panel.

IMU FAULT LIGHT. The IMU FAULT light on each HAMS control panel (figure 1-107) comes on whenever the signal; either heading, roll, or pitch, from the IMU/IDNE disagrees with both corresponding AHRU signals by the preset trip tolerance. The IMU FAULT light will be accompanied by either the HEADING FAULT or ATTITUDE FAULT light on the HAMS control panel and the HAMS INOP light on the pilot's annunciator panel.

HAMS INOP LIGHT. The HAMS INOP light on the pilot's annunciator panel (figure 1-128) comes on whenever the system loses the ability to monitor the relation between IMU/IDNE data and AHRU data in any one axis. The light will come on if: (1) The HAMS loses AC power; (2) Both pilot and copilot place their input selector switches to "IMU;" (3) Both comparators trip in one axis. If both comparators trip in one axis, the affected axis will be indicated by the HEADING FAULT or ATTITUDE FAULT and IMU FAULT lights on the HAMS control panels and the system will continue to monitor signals in the other axis.

AHRU FAULT LIGHT. With "AHRU" selected on both HAMS panels, the AHRU FAULT light on the pilot's annunciator panel (figure 1-128) comes on whenever one comparator trip occurs in either axis. The AHRU FAULT light will be accompanied by a HEADING FAULT OR ATTITUDE FAULT light and

warning flags on the instruments. If the input selector switch is placed in the "IMU" position following the AHRU fault, the AHRU FAULT light will remain on as an indication of the preceding fault. If the fault is cleared, the AHRU FAULT light will remain on until the input selector switch is placed in the "AHRU" position.

HAMS Failure Indications.

To determine what heading or attitude reference to use when a HAMS failure indication occurs, refer to the HAMS Failure Indications - Heading and HAMS Failure Indications - Attitude tables that follow.

HAMS FAILURE INDICATIONS - HEADING

HAMS SELECTION	SYSTEM STATUS			WARNING LIGHTS						INSTRUMENT FLAGS				ACTION/ COMMENTS
				ANNUNCIATOR PANEL		PILOTS CONTROL PNL		COPILOTS CONTROL PNL		PILOT'S		COPILOT'S		
	AHRU 1	AHRU 2	IMU	HAMS INOP	AHRU FAULT	HDG FAULT	IMU FAULT	HDG FAULT	IMU FAULT	HSI	BDHI	HSI	BDHI	
PILOT / AHRU	V	V	V											NONE
COPILOT / AHRU	F	V	V		X	X				X			X	PILOT SELECTS IMU
	V	F	V		X			X			X	X		COPILOT SELECTS IMU
	V	V	F	X		X	X	X	X					NONE
PILOT / AHRU	V	F	V		X									NONE
COPILOT / IMU	F	F	V	X	X	X		X		*	*	*	*	BASED ON FLAGS AND/ OR DISPLAYS
	V	F	F	X	X	X		X		*	*	*	*	SELECT USABLE SYSTEMS.
COPILOT / AHRU	F	V	V		X									NONE
PILOT / IMU	F	F	V	X	X	X		X		*	*	*	*	BASED ON FLAGS AND/ OR DISPLAYS
	F	V	F	X	X	X		X		*	*	*	*	SELECT USABLE SYSTEMS

HAMS FAILURE INDICATIONS - HEADING (CONT)

HAMS SELECTION	SYSTEM STATUS			ANNUNCIATOR PANEL		WARNING LIGHTS				INSTRUMENT FLAGS				ACTION/COMMENTS
						PILOT'S CONTROL PANEL		COPILOT'S CONT PANEL		PILOT'S		COPILOT'S		
	AHRU 1	AHRU 2	IMU	HAMS INOP	AHRU FAULT	HDG FAULT	IMU FAULT	HDG FAULT	IMU FAULT	HSI	BDHI	HSI	BDHI	
PILOT / IMU	F	F	V	X	X									AVOID IF POSSIBLE
COPILOT / IMU	F	F	F	X	X					*	*	*	*	USE STANDBY COMPASS

* INDICATES THAT THIS FLAG FUNCTION IS UNDER THE CONTROL OF THE SELECTED SYSTEM.
V INDICATES A VALID SYSTEM.
F INDICATES A FAILED SYSTEM.

HAMS FAILURE INDICATIONS - ATTITUDE

HAMS SELECTION	SYSTEM STATUS			WARNING LIGHTS						INSTRUMENT FLAGS		ACTION/COMMENTS
				ANNUNCIATOR PANEL		PILOT'S CONT PANEL		COPILOT'S CONT PANEL		PILOT'S	CO-PILOT'S	
	AHRU 1	AHRU 2	IMU	HAMS INOP	AHRU FAULT	ATTIT FAULT	IMU FAULT	ATTIT FAULT	IMU FAULT	ADI GYRO	ADI GYRO	
PILOT / AHRU	V	V	V									NONE
	F	V	V		X	X				X		PILOT SELECTS IMU
COPILOT / AHRU	V	F	V		X			X			X	COPILOT SELECTS IMU
	V	V	F	X			X		X	*	*	NONE
PILOT / AHRU	V	F	V		X							NONE
	F	F	V	X	X	X				*	*	BASED ON FLAGS AND/OR DISPLAYS
COPILOT / IMU	V	F	F	X	X	X		X		*	*	SELECT USEABLE SYSTEMS
PILOT / IMU	F	V	V		X							NONE
	F	F	V	X	X	X		X		*	*	BASED ON FLAGS AND/OR DISPLAYS
COPILOT / AHRU	F	V	F	X	X	X		X		*	*	SELECT USEABLE SYSTEMS

HAMS FAILURE INDICATIONS - ATTITUDE (CONT)

HAMS SELECTION	SYSTEM STATUS			WARNING LIGHTS						INSTRUMENT FLAGS		ACTION/ COMMENTS
				ANNUNCIATOR PANEL		PILOT'S CONT PANEL		COPILOT'S CONT PANEL		PILOT'S	CO-PILOT'S	
	AHRU 1	AHRU 2	IMU	HAMS INOP	AHRU FAULT	ATTIT FAULT	IMU FAULT	ATTIT FAULT	IMU FAULT	ADI GYRO	ADI GYRO	
PILOT IMU	F	F	V	X	X					*	*	REDUCED CAPABILITY. SINGLE HEADING/ ATTITUDE DATA SOURCE
COPILOT IMU	F	F	F	X	X					*	*	TURN AND SLIP INDICATOR

* INDICATES THAT INSTRUMENT FLAGS ARE UNDER CONTROL OF VALIDITY SIGNALS FROM THE SELECTED SYSTEM. WARNING LIGHTS REMAIN UNDER CONTROL OF THE HAMS COMPARATOR.

V INDICATES A VALID SYSTEM.

F INDICATES A FAILED SYSTEM.

HAMS Normal Mode of Operation.

The system will operate only when:

(1) The AHRU's are operating,
(2) The IMU/IDNE is in an inertial mode,
(3) The IDNE primary computer is valid,
(4) The primary analog-to-digital converter is operating, and
(5) The pilot's and copilot's HAMS input selector switches are in the "AHRU" position.

The IDNE system will not initialize heading on the ground when the IDNE primary computer is valid but the auxiliary computer is in control. After heading is initialized with the primary computer in control, the auxiliary computer may be selected and the HAMS will function normally as long as the primary computer/converter remains valid.

Normal operation of HAMS is obtained by using the pilot's and copilot's HAMS control panel (figure 1-107). Before the HAMS panels can be used, both AHRU's and the IMU/IDNE must be operating. When both input selector switches are placed to "AHRU," the ADI, BDHI and HSI warning flags, the AHRU FAULT and HAMS INOP lights on the annunciator panel and the HAMS control panels are controlled by the signal comparators. In addition, warning flags will also appear in the above instruments in the event of a loss of power.

The No. 1 AHRU supplies pitch and roll data to the pilot's ADI, the pilot's flight director, the CDPIR and the MADAR. The No. 1 AHRU also supplies heading data to the pilot's HSI, the copilot's BDHI, the CDPIR and the MADAR. The No. 2 AHRU supplies pitch and roll data to the copilot's ADI and the copilot's flight director and heading data to the copilot's HSI and to the pilot's BDHI.

Any time either AHRU, pitch or roll output data disagrees with IMU/IDNE data by 4 (±1) degrees or either AHRU heading output data disagrees with IMU/IDNE data by 6 (±1) degrees, a HAMS comparator trip causes the appropriate annunciator and HAMS control panel lights to come on to indicate the specific malfunction and the appropriate ADI, BDHI and HSI warning flags to be displayed.

The IMU FAULT light, the ATTITUDE FAULT light and the HAMS INOP light come on whenever the IMU/IDNE roll or pitch data differs by 4 (±1) degrees from both AHRU's. The IMU FAULT light, the HEADING FAULT light and the HAMS INOP light come on whenever the IMU/IDNE heading data differs by 6 (±1) degrees from both AHRU's. Whenever the HAMS INOP light is on, control of the flight instrument warning flags, in the inoperative axis, reverts back to the validity signal from the selected data source. Warning lights remain under control of the HAMS comparator.

Magnetic variation is not stored in the IDNE for latitudes above 70 degrees North or 70 degrees South. The HEADING FAULT light, the IMU FAULT light and the HAMS INOP light come on when the airplane crosses 70 degrees North or 70 degrees South latitudes.

Note

If the navigator has orientated both AHRU's and the IMU to the same grid North reference prior to crossing 70 degrees North or South latitude, the lights will not come on.

HAMS controlled warning flags and lights will automatically clear following a failure when the fault clears, if both pilot's and copilot's HAMS input selector switches are in the "AHRU" position. If either the pilot's or copilot's selector switch is in the "IMU" position and the IMU FAULT or AHRU FAULT warning lights come on, they may not automatically go off when the fault clears. The system may be reset from this condition by momentarily placing the other HAMS input selector switch to the "IMU" position and then moving both switches to the "AHRU" position within 2 seconds of each other. If HAMS becomes inoperative due to a malfunction of the IDNE or a lack of IDNE components, open the HAMS circuit breaker on the navigator's No. 2 circuit breaker panel, avionics AC bus 2 (figure 1-69). This action connects the pilot's and copilot's indicators to the pitch, roll, and heading signals from the AHRUs and returns control of the instrument flags to the AHRU validity signals. If an AHRU failure occurs subsequently, the HAMS circuit breakers may be closed and the IMU selected to determine if IMU attitude or heading data is useable.

Failure of the IDNE primary computer or primary analog-to-digital converter will prevent the IDNE system from supplying magnetic heading data to the HAMS and may result in hunting of the heading servo follower, causing intermittent HSI and BDHI warning flags to appear and heading fault lights to come on. Failure of the IDNE control power supply or of the IMU will cause the loss of pitch, roll and heading outputs of the IDNE to HAMS. As a result, intermittent warning flags will appear and fault lights will come on for the heading and attitude functions. Should such intermittent flags or lights appear, open the HAMS circuit breaker on the navigator's No. 2 circuit breaker panel, avionics AC bus 2 (figure 1-69), in order to revert the control of the pilot's and copilot's indicators back to the AHRU systems.

HAMS Alternate Modes of Operation.

SINGLE IMU MODE. The single IMU mode is an alternate mode selected by either pilot following a fault of his AHRU output signals. It should not be used unless there has been a preceding AHRU fault.

When the pilot selects IMU with the input selector switch on his HAMS control panel, the IMU data is routed to the pilot's ADI, flight director, and HSI, to the CDPIR, and copilot's BDHI.

When the copilot selects IMU with the input selector switch on his HAMS control panel, the IMU data is routed to the copilot's ADI, flight director, HSI, and pilot's BDHI.

After either pilot or copilot has selected IMU, the system will continue to monitor signals between the IMU/IDNE and the operating AHRU. A second fault will be announced when the HAMS INOP light on the annunciator panel comes on at which time control of the flight instrument warning flags reverts back to the selected systems. When this happens, the pilots shall crosscheck their flight instruments.

WARNING

Selection of the IMU for HAMS displays will leave the VOR and TACAN bearings referenced to their associated AHRU. The VOR and TACAN displays will be in error if their associated AHRU is in error.

If a selector switch is in the "IMU" position, and the IDNE loses the IMU heading, reference AHRU No. 1 heading plus 22.5 degrees is displayed on the corresponding HSI/BDHI.

DUAL IMU MODE. Selection of IMU by both pilots automatically eliminates the HAMS system capability to cross-monitor AHRU and IMU/IDNE signals and causes the HAMS INOP light to come on. This mode should be used only when both AHRUs have failed.

HAMS Preflight Check.

Refer to the Pilot's Before Taxi Checklist in Section II, for the preflight check of the HAMS.

PERISCOPIC SEXTANT.

A periscopic sextant is stowed at the navigator's station. The sextant is a precise and delicate instrument and must be handled with care. The sextant mount is located six inches to the left of the airplane centerline at the navigator's flight station. When mounted, the sextant may be rotated through 360 degrees in azimuth and from -10 degrees to +92 degrees in elevation. An averaging device on the sextant gives a continuous moving average for a two-minute period. The averaging operation can be stopped any time after 30 seconds has elapsed from the start of the operation.

Note

The airplane empennage will blank out celestial bodies located below 11.5 degrees and 10 degrees either side of the airplane centerline.

LOW ALTITUDE RADAR ALTIMETER SYSTEM.

Two low altitude radar altimeter systems installed in the airplane provide an accurate indication of airplane altitude above the ground surface. Two integrally lighted, low altitude radar altimeter indicators (figure 1-109) display attitude in 20-foot increments between -20 and 500 feet and 50-foot increments between 500 feet and 2,500 feet. Signals generated by the two transceivers (figure 1-81) are transmitted and received by two sets of tandem antennas (figure 1-82) flush-mounted on the bottom of the left main landing gear pod. These signals are visually displayed on the radar altimeter indicators on the pilot's and copilot's main instrument panels (figures 1-8 and 1-10). All controls and lighting are located on or integral with the radar altimeter.

Intermittent flags or pointer drive-down may occur above the functional range of 5,000 feet. Consider the equipment discrepant only if problems are experienced at 5,000 feet or below. Below 5,000 feet, the pointer should remain masked until reaching the operational range.

The pilot's low altitude radar altimeter system receives 115-volt AC power from the No. 1 avionics bus (figure 1-69). The copilot's low altitude radar altimeter system receives 115-volt AC power from the No. 2 avionics bus (figure 1-69).

Radar Altimeter Controls and Indicators.

POWER AND FUNCTIONAL TEST SWITCH. The power and function test switch (1) is used to turn on and test the radar altimeter system. Rotating the switch to "ON" places the system into operation. Rotating and holding the switch to "TEST" places the system into the test mode of operation and checks all the components of the system.

Note

The AFCS may also place the RAE in test modes. In addition to the BITE test mode, the AFCS may initiate a trip test where the altitude outputs are 1,000 (±100) feet. The altitude outputs then drive to -20 (±10) feet at a 25 (±5) feet rate.

ALTITUDE TRIP SET KNOB. A rotary ALTITUDE SET knob (6) is used to set in the desired trip altitudes from -20 to 2,500 feet.

ALTITUDE TRIP MARKER. An altitude trip marker (4) is positioned to the desired trip altitude when the ALTITUDE SET knob is rotated.

ALTITUDE LOW LIGHT. An amber DIM-PRESS-TO-TEST altitude low light (7) comes on when the airplane descends below the set trip altitude. The light is tested by pressing the light assembly.

Note

An internal relay that energizes the light also provides a discrete signal to the FDC to illuminate the ADI bullseye.

ALTITUDE POINTER. An altitude pointer (3) is used to register the radar altitude on the altimeter. The altitude pointer indicates 20 feet below the zero point to permit display of below zero altitude signal inputs.

Note

A zero (±5) foot altitude indication is obtained on the radar altimeter when the airplane is at static ground attitude. This minus indication is normal because the system is designed to indicate zero feet altitude at touchdown. When the airplane is kneeled, a minus 5 to minus 6-foot indication is obtained.

WARNING FLAG. A barber-poled warning flag (5) comes into view during the warm-up period, whenever the system malfunctions or during the test modes.

Note

The IDNE display panel RAE indications are the same as the warning flag.

ALTITUDE/POWER OFF MASK. The altitude pointer is driven behind a mask (2), that is painted on the inside of the cover glass, whenever the power is off. When the altitude is above 2,500 feet, the pointer is approximately two-thirds covered by the mask.

Low Altitude Radar Altimeter Normal Operation.

The following procedures are used to put the radar altimeter into operation:

1. Set the altitude trip index marker to 20 feet. The warning flag should be retracted.

Note

Airplanes 68307, 70167, 70168, 90018 and up and airplanes modified by T.O. 1251 have an internal heater monitor which may increase the warm-up time. The heaters are not controlled by the ON-OFF switch, but are operating any time the circuit breaker is closed. The heaters will reach operating temperature in 8 minutes maximum in a 70°F ambient temperature increasing to 23 minutes at -65°F.

2. Rotate the power and functional test knob clockwise to the "ON" position. Allow at least 2 minutes for warm-up. The warning flag should disappear

from view. The altitude pointer should move to approximately the zero foot altitude position, and the altitude low light should come on.

3. Rotate and hold the functional test knob to the "TEST" position. The warning flag should appear, the altitude pointer should rotate to the 40-foot (±5 feet) altitude position, and the altitude low light should go off.

4. Release the functional test knob. The warning flag should retract from view, the altitude pointer should return to zero foot position, and the altitude low light should come on again.

5. Rotate the functional test knob to the "OFF" position. The altitude low light should go off, and the altitude pointer should rotate past the 2,500-foot mark and stop behind the altitude/power off mask with the warning flag retracted.

Note

The above test procedure is operable throughout the altitude range of the airplane, but is not to be performed when the altimeter is being used in the terrain following/terrain avoidance or instrument landing modes. If it is initiated, the validity signal to the AFCS, FDC, and MMR is removed, and the airplane is given a pitchup command. Also the runway symbol will be retracted on the ADI.

For in-flight test, the altitude trip marker should be set to 60 feet. When the test is initiated, and the altitude pointer reaches the test point, the altitude low light should come on.

INTEGRATED FLIGHT INSTRUMENT SYSTEM (IFIS).

An integrated flight instrument system is installed in both the pilot's and copilot's main instrument panel. The IFIS consists of the attitude director indicator (ADI), horizontal situation indicator (HSI), peripheral command indicator (PCI), airspeed-Mach indicator (AMI), and the altitude-vertical velocity indicator (AVVI) (figure 1-110).

FLIGHT DIRECTOR SYSTEM (FDS).

Two independently operating flight director systems are installed in the airplane: one for the pilot and one for the copilot. On airplanes not modified by T.O. 1376, the FDS has some modes that are inoperative. For operation of the interim FDS, refer to the "FDS Operational Characteristics" paragraph in this section.

Each FDS consists of a flight director computer (FDC) a navigation selector (NSP), an auxiliary navigation selector panel (ANSP), an attitude director indicator (ADI), a peripheral command indicator (PCI), a horizontal situation indicator (HSI) and a remote HSI heading and course selector panel (RHSI).

The NSP is used to select the navigation operating mode for the FDS and autopilot. Selection of the operating mode on the NSP determines the signal source and functional output for the FDC.

The ANSP is used to manually select the FDS altitude hold mode and/or the VOR course mode. Selection of either or both of these modes provides steering information to the FDS during cruise. This steering information is not supplied to the autopilot.

The ADI responds to commands from the FDC and AHRU to provide information about roll, pitch, turn rate, slip, glideslope, altitude hold, airspeed or SKE deviation, ILS deviation and radar altimeter indications.

The PCI is an integrated pitch and roll command indicator consisting of two concentric cylinders which rotate from computed commands from the FDC to provide visual indications of computed steering.

The HSI displays heading, course deviations, and is the source of heading and course error signals for FDS bank steering computations.

The FDS computer computes bank and pitch steering information for the ADI's and PCI's from deviation signals, heading and course errors, roll and pitch; and together with the NSP and ANSP, provides the primary switching control for the ADI and HSI displays.

The FDS has the following modes which may be selected through the NSP and ANSP:

Primary Mode	Sub Mode
Nav Aids OFF	None
Heading	None
VOR/ILS	VOR Appr., VOR cruise, ILS and Flare
ILS	ILS and Flare
TACAN	TACAN Appr. and TACAN Cruise
Radar	TF/TA and ARA
Pri Comp	Inrtl Heading, Dest Steer, Track Steer, Air Drop (CARP), Ver Nav

Aux Comp	Same as Pri Comp, except Ver Nav is not available
Alt Hold	None

Note: A go-around mode is available but is independent of any NSP selection. It is selected by depressing the G/A button on the pilots' control wheels.

FDS Mode of Operation

The FDS modes of operation are described as follows:

NAVIGATION AIDS OFF MODE. The navigation aids off mode is selected by depressing the NAV AIDS OFF pushbutton on the NSP. In this mode, the FDS system presents basic pitch and roll attitude information on the ADI attitude sphere and compass heading information from the AHRU that is displayed on the HSI. No steering commands or deviation signals are displayed.

MANUAL HEADING MODE. The manual heading mode has priority over all other FDS modes. The HDG pushbutton can be depressed when any other mode switch is depressed. When the HDG pushbutton is depressed, the heading marker may be set to a desired heading with the HSI HEADING SET knob or the RHSI HDG SET knob. The bank steering bar on the ADI will come into view to provide roll steering commands to keep the airplane on the selected heading. The pitch steering bar is retracted from view.

VOR MODE. The VOR has two modes. A VOR approach mode is used during a VOR approach when approximately 25 N.M. from the station. A VOR cruise mode is used during cruise when flying from one VOR station to another. When the VOR/ILS pushbutton is depressed, the FDS is in the VOR approach mode. The VOR cruise mode may then be engaged by depressing the VOR CRS pushbutton on the ANSP. To disengage the VOR cruise mode, the VOR CRS pushbutton is depressed again. The FDS is then switched back to the VOR approach mode.

The VOR cruise mode can only be selected after the VOR approach mode is engaged. When the VOR/ILS pushbutton is depressed, the VOR CRS legend light in the VOR CRS pushbutton comes on indicating that the VOR cruise mode is available. When the VOR cruise mode is engaged (by depressing the VOR CRS pushbutton), the ON light in the VOR CRS pushbutton comes on.

In either mode, the desired VOR course is set with the COURSE SET knob on the HSI and the desired precapture heading is set with the HEADING SET knob on the HSI. The HSI will indicate VOR course deviation; VOR station bearing, selected course and heading. The ADI will display FDS steering commands to intercept the selected course.

The FDS provides steering commands to fly the airplane on the intercept heading until reaching a position of approximately one-dot deviation in VOR cruise or 1-1/2 dot deviation in VOR approach from the selected course. The FDC switches from the intercept heading mode to the VOR course capture mode (as indicated by the HDG light on the ADI going off) and the bank steering bar commands a turn to intercept the selected course. Bank steering bar inputs are derived from course deviation. After course capture, the FDS provides steering commands for tracking the selected course.

Note

During station passage, the FDS switches to the heading mode as indicated by the HDG light on the ADI coming on. Station passage is sensed anytime after course capture and course deviation becomes greater than one dot.

TACAN MODE. The TACAN mode is basically the same as the VOR mode except that it automatically switches from TACAN cruise to TACAN approach at a distance of 28 N.M. When the TACAN distance is invalid, the FDS operates only in the approach mode. The TACAN mode is selected by depressing the TACAN pushbutton on the NSP.

ILS MODE. The ILS mode provides localizer and glideslope information for an ILS approach. To engage the ILS mode, the VHF navigation receiver is tuned to a localizer frequency, which provides localizer information and automatic selection of the glideslope receiver channel, the desired localizer course and intercept heading are set on the HSI and the VOR/ILS or ILS pushbutton on the NSP is depressed. After the ILS mode is engaged, the CDI on the HSI will be deflected and the bank steering bar on the ADI will come into view to provide roll commands to capture the intercept heading. At localizer capture (slightly less than two dots deviation), the FDS automatically switches from heading steer and provides steering commands from course deviations. After localizer capture, the FDS provides steering commands for tracking the localizer course. The crab angle pointer on the ADI comes in view approximately 20 seconds after localizer track occurs.

Prior to glideslope capture, the vertical deviation indicator will normally be deflected full scale up indicating airplane position with respect to the glideslope. Glideslope capture occurs when glideslope deviation is approximately one third-dot from the glideslope. At this time, if desensitized glideslope signals are used in the flight director, the ADI attitude sphere rotates bringing the ILS approach bullseye into view. The pitch steering bar may have already been in view and the PCI may have

already been active if the altitude hold mode is in use, if not; the pitch steering bar comes into view and the PCI becomes active. The pitch steering bar provides pitch commands to capture the glideslope.

Glideslope signals are desensitized by the autopilot as a function of radar altitude, when VOR/ILS-1 and VOR/ILS-2 are selected and both VHF navigation receivers are operating. The purpose of this desensitization is to provide pitch steering commands compatible with glideslope convergence.

The ILS approach bullseye moves vertically to indicate deviation from the glideslope (repeats vertical deviation indicator). It also moves horizontally to indicate deviation from the localizer (repeats CDI indication).

When the airplane radar altitude reaches 200 feet, the runway symbol comes into view at the bottom of the ADI and moves towards the miniature airplane as a function of decreasing altitude. At DH (decision height), as determined by the setting in the radar altimeter, the amber light (outer ring on the ILS approach bullseye) comes on.

The flare mode is engaged automatically at a radar altitude of 50 feet. At flare engagement, the green light (inner ring on the ILS approach bullseye) comes on and the pitch steering bar receives pitch commands from the autopilot flare computation. When the runway symbol touches the miniature airplane symbol, the airplane will be at zero radar altitude. The bullseye will lock in pitch during flare to prevent oscillation. If for any reason it rotates out of view during flare, it will remain out of view.

GO-AROUND MODE. The go-around mode may be initiated at any time by depressing the G/A pushbutton on either control wheel. When the go-around mode is initiated, the G/A light on both ADI's come on and a pitch steering command is provided by the go-around computer. A wings level command will be indicated on the ADI's unless the heading mode is selected. If the heading mode is selected, then the bank steering bar will provide steering commands to the selected heading. The go-around computer supplies pitch steering commands to the pitch steering bars to provide the optimum climbout pitch angle. The pitch steering commands compensate for partial loss of thrust and for any flap setting. These pitch steering commands are valid even with a partially inoperative ADI or airspeed indicator.

RADAR MODE. The radar mode supplies MMR inputs that are used by the FDS to provide vertical steering commands and vertical deviation signals to the ADI during TF/TA operation or ARA approach. When the pilot's radar mode is selected, the primary IDNE computer provides lateral steering signals to the pilot's FDS. When the copilot's radar mode is selected, the auxiliary IDNE computer provides lateral steering signals to the copilot's FDS.

AIRBORNE RADAR APPROACH MODE. To set up for an ARA, the appropriate IDNE and MMR procedures must be followed. The pilot selects the desired capture heading with the HSI HEADING SET knob and selects the pri compt, aux comp or radar mode on his NSP. If the pri compt or aux compt mode is selected, heading capture will occur at 5 N.M. crosstrack deviation. If the radar mode is selected, (when the MMR is in the radar approach mode), the heading capture will occur at 1.5 N.M. At some point greater than 10 N.M. from the runway, the radar mode is selected and the FDS is then ready to capture the radar glidepath. Capture of the radar approach glidepath will occur when the vertical deviation indicator on the pilot's ADI is nearly centered.

Lateral guidance is provided by crosstrack deviation and track angle error from the IDNE, vertical guidance is provided by angular deviation from the MMR and rate of altitude change from a CADC.

TERRAIN FOLLOWING MODE. The TF mode provides the flight director computer with signals generated by the MMR for pitch steering commands required for TF operation. To set up for TF, the navigator assigns control of the Ku- or X-band radar to the pilot. After the pilot sets up his MMR control panel and depresses the RADAR pushbutton on his NSP, pitch steering commands will be displayed on the ADI.

CAUTION

Care shall be taken not to exceed 13 degrees pitch angle. A 15-degree pitch angle, or greater, will cause the MMR to go into and remain in a failed condition until the pitch angle is decreased below the 15-degree MMR antenna limit.

Lateral steering modes available are: Heading select or any IDNE lateral mode (inertial heading, destination steer, track steer or terminal navigation).

INERTIAL DOPPLER NAVIGATION - HEADING STEER. In the heading steer mode, the flight director computer receives its steering information from the primary or auxiliary computer. To set up for the heading steer mode, the navigator selects the desired true heading and enters it on the IDNE CONTROL panel and depresses the HDG STEER and MODE ENABLE pushbuttons. If the COMP SEL pushbutton on the IDNE CONTROL panel is indicating PRI, then the pilot depresses the PRI COMPT pushbutton on the NSP. If the COMP SEL pushbutton is indicating AUX, the pilot depresses the AUX COMPT pushbutton on the NSP. When the proper pushbutton is depressed on the NSP, the heading displayed on the HSI heading marker is a magnetic heading. With the proper computer selected on the NSP, the flight director computer provides bank

steering commands to capture and maintain the desired heading. The steering commands are displayed on the ADI by the bank steering bar.

INERTIAL DOPPLER NAVIGATION - DESTINATION STEER MODE. In the destination steer mode, the flight director computer receives its steering information from the primary or auxiliary computer. To set up for this mode, the navigator selects the desired destination program and depresses the DEST STEER and MODE ENABLE pushbuttons on the IDNE CONTROL panel. If the PRI light in the COMP SEL pushbutton on the IDNE CONTROL panel is on, the pilot depresses the PRI COMPT pushbutton on the NSP. If the AUX light in the COMP SEL pushbutton is on, the pilot engages the AUX COMPT pushbutton. The flight director computer then supplies steering commands to the ADI bank steering bar to capture and maintain the required heading.

INERTIAL DOPPLER NAVIGATION - TRACK STEER MODE. In the track steer mode, the FDS receives its track angle error and crosstrack deviation error from the primary or auxiliary computer. To set up for this mode, the navigator selects the desired track steer program and depresses the TRACK STEER and MODE ENABLE pushbuttons on the IDNE CONTROL panel. The pilot should select the controlling computer on his NAVIGATION SELECTOR panel. Since capture occurs at less than two dots deviation, the heading mode must be selected when outside the capture zone. The pilot should first select the heading under the heading markers on his HSI. The HDG light on the pilot's ADI will come on indicating heading mode initialization. When inside the capture zone (less than two dots deviation), the heading hold mode should be disengaged to arm the system for capture on the selected track. At five N.M. crosstrack deviation, the heading select mode will disengage and the airplane will be commanded to turn to a 45-degree drift corrected intercept angle. Between two to three N.M., depending on the speed, the flight director computer commands a turn to intercept the selected track.

TERMINAL NAVIGATION-AIRDROP (CARP) MODE. In this mode, the FDS receives its track angle error signals and crosstrack deviation signals from the IDNE. This function is similar to the track steer mode. When on track, signal scaling is increased to provide the necessary accuracy for tracking.

To prepare for the airdrop (CARP) operation, the navigator sets up the IDNE CONTROL panel and the pilot follows the same procedure as in the track mode. When the crosstrack deviation is less than 0.1 N.M., the HSI crosstrack deviation scaling increases by a factor of ten.

VERTICAL NAVIGATION MODE. This mode couples the FDS to the VER NAV mode of the IDNE primary computer. The IDNE provides vertical steering signals to the FDS to command a computed flight path between two selected points or from a present position along a selected flight path.

To set up the vertical navigation mode, the navigator selects the vertical navigation program to be executed, rotates the DISPLAY SELECTS switch on the IDNE INDICATOR panel to the "VERT NAV" position, depresses the VERT NAV POINT or SLOPE pushbutton, depresses the VERT NAV ON/OFF pushbutton for ON and depresses the MODE ENABLE pushbutton on the IDNE control panel. At this point, the VER NAV light on the NSP should come on. The pilot, when advised by the navigator, depresses the PRI COMPT pushbutton on his NSP. The vertical navigation mode capture occurs when the FDS receives a vertical navigation capture signal from the IDNE primary computer.

ALTITUDE HOLD MODE. The altitude hold mode is engaged by depressing the ALT HOLD pushbutton on the ANSP. In this mode the No. 2 CADC provides altitude deviation signals to the FDS. The FDS provides altitude hold commands to the pitch steering bars on the ADI's. The altitude deviation signals are referenced to the airplane altitude at the time the altitude hold mode is engaged.

The altitude hold mode cannot be engaged unless the No. 2 CADC altitude validity is present in the flight director computer. The presence of this signal is indicated when the ALT HOLD enable light is on. Momentarily depressing the ALT HOLD pushbutton engages the mode and the ON light in the pushbutton comes on.

Certain modes (G/A, TF, VER NAV Capture, ILS G/S Capture or ARA G/S Capture) have priority over the altitude hold mode and will prevent engagement of the altitude hold mode. Engagement of any of the above priority modes while in the altitude hold mode will cause the altitude hold mode to disengage and the ON light in the ALT HOLD pushbutton will go off. Re-engagement can only be accomplished by depressing the ALT HOLD pushbutton again after the ALT HOLD light in the pushbutton comes on.

If either pilot's or copilot's altitude hold mode or the autopilot altitude hold mode is engaged and the other pilot engages his altitude hold mode, the lights in the other ALT HOLD pushbutton will go off for approximately one second. This permits the altitude hold mode to synchronize to the new altitude reference.

FDS Operational Characteristics.

The following operational characteristics are inherent in the design of the flight director system:

(1) The heading mode has priority over all other modes when selected. The bank steering bar will furnish steering guidance to the heading marker, as set, whenever the HDG light is on.

(2) An intercept of a selected VOR or TACAN course can be accomplished by using the HSI HEADING SET knob to select the intercept heading and the COURSE SET knob to select the desired course. At the VOR or TACAN capture point (approximately 1/4 to 1-1/2 dots deviation, depending on mode and distance from station), the flight director automatically switches from the heading mode to beam capture. Capture and tracking are established if the heading mode is not engaged on the navigation selector panel.

WARNING

Selection of the IMU for HAMS displays will leave the VOR and TACAN bearings referenced to their associated AHRU. The VOR and TACAN displays will be in error if their associated AHRU is in error.

(3) When tracking in the VOR or TACAN mode the FDS will automatically transfer into the heading mode anytime the deviation on the HSI exceeds approximately 4/5 dot. The HDG light will come on and the bank steering bar will command a turn to the heading marker.

(4) During VOR or TACAN station passage when the deviation exceeds one dot the FDS will automatically transfer into the heading mode and the HDG light will come on. The pilot then selects the desired outbound course on the HSI and adjust the heading marker as desired to intercept the outbound radial.

Note

In 3 and 4 above, the HDG light on the ADI indicates the FDS is in the heading mode with the track mode temporarily over ridden, but still armed. The autopilot, if engaged, may or may not be in its heading hold mode.

(5) If holding on a VOR or TACAN radial, select the heading mode for steering during the "off radial" leg of the holding pattern. Recapture of the inbound radial may be accomplished by disengaging the heading mode after the airplane is turned to within 90 degrees of the selected inbound radial.

(6) Flight director system steering is erroneous when flying a back course ILS approach. If flying this type approach, the heading mode should be used in conjunction with the ILS mode. This may be accomplished by using the HEADING SET knob to set the back course heading and engaging the heading mode on the navigation selector panel. The inbound front course must be selected in the course selector window. The course deviation indicator on the HSI must be used for back course ILS track deviation.

(7) The altitude hold mode on the ANSP may be used in conjunction with all lateral navigational modes including the heading mode. The pitch steering will command steering to the reference altitude and the PCI will be active whenever both roll and pitch commands are available.

(8) The heading mode shall be selected on the nav select panel prior to switching navigational modes, to provide proper resetting of the flight director logic circuits.

(9) The RHSI control panel contains heading set and course set knobs and has a selector switch for normal or remote control of the HSI. When the FDS is in the primary computer, auxiliary computer or radar mode, place the selector switch to "NORMAL". Either switch position may be used for all other navigation modes.

On airplanes not modified by T.O. 1376, the following operational characteristics are inherent in the design of the interim flight director system.

(1) The heading, VOR, TACAN, and ILS modes are usable but the steering has not been optimized.

(2) The heading mode has priority over all other modes when selected. The bank steering bar will furnish steering guidance to the heading marker, as set, whenever the HDG light is on.

(3) An intercept of a selected VOR or TACAN course can be accomplished by using the HSI HEADING SET knob to select the intercept heading and the COURSE SET knob to select the desired course. At approximately one dot deviation from "on course", the flight director automatically switches from the heading mode to beam capture, and tracking is established if the heading mode is not engaged on the navigation selector panel.

WARNING

Selection of the IMU for HAMS displays will leave the VOR and TACAN bearings referenced to their associated AHRU. The VOR and TACAN displays will be in error if their associated AHRU is in error.

(4) While tracking on the selected VOR or TACAN radial, an "off course" deviation of slightly less than one dot may transfer the flight director into the "station passage" mode regardless of the airplane position in relation to the station. While in this mode, the steering command may be unsatisfactory for correct tracking of the selected radial. The flight director may remain in the "station passage" mode until the course deviation indicator is back within approximately one-half dot deviation for at least 15 seconds. If it is suspected that the flight director is in the "station passage" mode, recycle the heading pushbutton and recapture the desired radial. The HSI should be monitored closely during a VOR or TACAN

approach. If a discrepancy exists between the flight director commands and the HSI course deviation indicator, the flight director steering commands should be disregarded.

(5) When over the VOR or TACAN station, position the heading marker to an intercept angle of the outbound radial and select the heading mode. After setting the desired outboard radial in the course window, disengage the heading mode and allow the flight director to capture the selected radial.

(6) When tracking on a VOR or TACAN radial, the heading mode should be selected while changing the VOR or TACAN receivers from one frequency to a new frequency. Set the new inbound course, if necessary, and recapture the radial by disengaging the heading mode.

(7) If holding on a VOR or TACAN radial, select the heading mode for steering during the "off radial" leg of the holding pattern. Recapture of the inbound radial may be accomplished by disengaging the heading mode after the airplane is turned to within 90 degrees of the selected inbound radial.

(8) Flight director system steering is erroneous when flying a back course ILS approach. If flying this type approach, the heading mode should be used in conjunction with the ILS mode. This may be accomplished by using the HEADING SET knob to set the back course heading and engaging the heading mode on the navigation selector panel. The inbound front course must be selected in the course selector window. The course deviation indicator on the HSI must be used for back course ILS track deviation.

(9) Approach mode capability in ILS will provide automatic capture of the localizer at two dots deviation from "on course". The pitch and bank steering bars may become excessively active below 300 feet due to the lack of desensitization. Raw deviation should be closely monitored during IFR approaches.

(10) If holding on ILS, the heading mode should be selected during the outbound leg for steering information. Recapture the ILS localizer by disengaging the heading mode.

(11) The flare and go-around modes of the flight director system are not developed and are inoperative. When a go-around or touch-and-go landing is performed following an ILS approach, the "bullseye" may oscillate across the ADI. The heading mode should be engaged as soon as practical after go-around to rotate the ADI "bullseye" out of view.

FDS Computer.

The FDS computer computes steering information for the ADI's and PCI's from deviation signals, heading and course errors, roll and pitch; and together with the navigation selector panel provides the major switching control for the ADI and HSI displays.

The flight director chart (figure 1-112) shows the possible switch combinations and the resultant flight director computer modes.

The pilot's FDS computer receives 28-volt DC power from the avionic DC bus No. 1, or avionics ISO DC bus and 115-volt AC power from the No. 1 navigation AC bus or avionics ISO AC bus (figure 1-69). The copilot's FDS computer receives 115-volt AC power from the Nav AC bus No. 2 and 28-volt DC from the avionics DC bus No. 2 (figure 1-69).

FDS Test Pushbuttons.

A FLT DIR TEST pushbutton on each navigation selector panel is used to test the respective FDS. Depressing a FLT DIR TEST pushbutton initiates the Built-in-Test-Equipment (BITE) that automatically checks the critical computational circuits of the computer.

FDS Self-Test Procedures.

Note

The self-test function may be discontinued at any time by engaging any other mode with heading mode off or by disengaging the heading mode on the navigation selector panel. Even though the airplane is established in track, the FDS will not re-establish the track configuration for up to 15 seconds after the respective mode is reengaged on the navigation selector panel. This condition applies to the ILS, ARA, VOR, and TACAN modes.

The test can be initiated and observed on the ground or any time during flight except during ILS track, ARA track, TF/TA or G/A.

1. Flight Director System Self-Test - ACCOMPLISHED

a. Any mode other than NAV AIDS OFF - SELECTED

b. PCI Power Switch - ON

c. FLT DIR Test Pushbutton - DEPRESSED

(1) The fault light will come on approximately four seconds after the test is initiated, stay on for three seconds to check the lamp, then go off. It will come on again only if there is a fault in the flight director computer.

(2) The ADI will display the following:

(a) The ILS approach bullseye centers, and the outer and inner rings illuminate amber and green respectively.

(b) The pitch steering bar will be half-scale up.

(c) The bank steering bar will be half-scale right.

(d) The vertical deviation indicator will be centered.

(e) The speed deviation indicator will be centered.

(f) The crab angle indicator will be operative.

(g) The HDG and G/A mode lights will come on.

(h) The FD, glideslope and deviation warning flaps will come into view.

(i) The VERNAV light on the NAVIGATION SELECTOR panel will come on.

(3) The PCI shutter will be retracted from view and the diamond pattern will move up and right at a steady rate.

(4) The HSI will display the following:

(a) The course deviation indicator will be centered.

(b) The course deviation warning flag will be in view.

The system resumes normal operation automatically at the end of the test which occurs approximately 40 seconds after the test button is depressed.

HORIZONTAL SITUATION INDICATOR (HSI).

CAUTION

To prevent damage to the HSI, turn the heading and course set knobs smoothly at a slow or moderate speed. Do not spin in a rapid jerky motion.

The No. 1 AHRU supplies heading information to the pilot's HSI. The No. 2 AHRU supplies heading information to the copilot's HSI.

Heading information can be supplied to the pilot's or copilot's HSI from the IMU/IDNE by selecting the "IMU" position of the input selector switch on the applicable HAMS control panel (figure 1-107) in the event that No. 1 or No. 2 AHRU information becomes invalid. Refer to the Heading and Attitude Monitor System (HAMS) paragraph, in this Section, for information on this mode of operation.

The HSI's (figure 1-110) are located on the pilot's and copilot's instrument panels. The HSI displays airplane heading, selected course, selected heading, bearing, distance, course deviation, and to-from information. Airplane heading is displayed on the compass card (28) under the upper lubber line (30). The heading marker (31), which rotates with the compass card, is set to the desired heading by the heading set knob (42). In the HDG mode, the HSI provides heading error signals (the difference between the selected heading and airplane heading) to the FDS and autopilot. The course arrow (33 and 41) is set to the desired course by the course set knob (38) and rotates with the compass card. The selected course is also displayed in the course selector window (32). In the course modes, the HSI provides course error signals (the difference between selected course and airplane heading) to the FDS computers and autopilot. The course deviation indicator (CDI) (44) shows airplane displacement (left or right) from a selected course in degrees or nautical miles depending on the navigation mode selected. The following navigation modes and deviations are given:

MODE	2-DOT DEVIATION
Localizer (ILS) - CAT I	2 1/2°
Localizer (ILS) - CAT II	2°
VOR/TACAN	10°
IDNE	
Track Steer (course Line)	3.0 NM
Terminal Nav (CARP, ARA)	0.3 NM

No course deviation is displayed when the NAV AIDS OFF mode is selected on the navigation selector panel. The to-from indicator (36) indicates that the course selected is towards or from the VOR or TACAN station. The bearing pointer (29) indicates bearing to a selected VOR or TACAN station, or destination during IDNE operation. A warning flag covers the range indicator window (27) if TACAN or IDNE range information is invalid. The course warning flag (35) appears in the window when TACAN, IDNE or VOR/ILS course deviation information is invalid. A power off flag (34) indicates a malfunction of the AHRU system or HSI voltage failure.

The pilot's HSI receives 115-volt AC power from the avionics isolated AC bus, and 26-volt AC power from the 26-volt AC isolated bus (figure 1-69). The copilot's HSI receives 115-volt AC power from the navigation AC bus No. 2, and 26-volt AC power from the 26-volt AC navigation bus No. 2 (figure 1-69).

Remote HSI Heading and Course Selector Panels.

On 70170 and up and airplanes modified by T.O. 501, two remote HSI heading and course selector panels (figure 1-110) provide the pilot and copilot with the capability of remotely positioning the heading marker and course arrow of each HSI. The following is a description and function of the controls on the remote panels:

HEADING SET KNOB. The HDG SET knob is used to control the heading marker on the HSI in one-degree detents.

Note

When utilizing the IDNE for horizontal guidance in the track steer mode with PRI COMPT, AUX COMPT or RADAR selected on the nav select panel, remote control of the HSI heading marker is inhibited. When the IDNE is in the heading or destination steer mode, with PRI COMPT, AUX COMPT or RADAR selected on the nav select panel, the HSI heading marker is driven to the heading towards the selected destination point.

SELECTOR SWITCH. The selector switch is used to set up the HSI for remote control. When the switch is in the "NORMAL" position, the HSI is operated in the normal manner. When the switch is in the "REMOTE" position, the HSI is operated from the remote panel.

COURSE SET KNOB. The CSE SET knob is used to control the course arrow on the HSI in one-degree detents.

ATTITUDE DIRECTOR INDICATOR (ADI).

The No. 1 AHRU supplies pitch and roll information to the pilot's ADI. The No. 2 AHRU supplies pitch and roll information to the copilot's ADI.

Pitch and roll information can be supplied to the pilot's or copilot's ADI from the IMU by selecting the "IMU" position of the input selector switch on the applicable HAMS control panel (figure 1-107), in the event that No. 1 or 2 AHRU information becomes invalid. Refer to the Heading and Attitude Monitor System (HAMS) paragraph in this Section for information on this mode of operation.

The ADIs (figure 1-110) are located on the pilot's and copilot's instrument panels. The ADIs provide information about roll, pitch, turn rate, slip, glideslope, crab angle, airspeed or SKE deviation, ILS deviation, radar altimeter indications, computed roll and pitch steering, FD modes, and signal and power conditions through warning flags.

The ADI pitch scale consists of horizontal lines for each five degrees of pitch between zero and 20 degrees and for each 10 degrees above 20. The ADI sphere pitch change is 2.25 degrees for each degree of airplane pitch attitude change near the neutral or zero pitch position. This ratio decreases to one-to-one at approximately 45 degrees.

A HDG mode light (10) comes on when the flight director computer is operating in the manual heading mode. This mode is active any time HDG is selected on the nav select panel, during the pre-capture phase for navigational guidance modes or during station passage in the VOR and TACAN modes.

The crab angle is displayed on the crab angle scale after course line or localizer track is engaged. The scale (11) is calibrated in degrees by the crab angle indicator (21). The crab angle is the difference between the airplane heading and the course set on the HSI.

During approaches utilizing crosswind landing gear, the course knob should be rotated the same number of degrees and in the same direction as set on the crosswind gear control.

The G/A light (12) comes on when the flight director computer is operating in the go-around mode. This mode is initiated by depressing the G/A button on either control wheel.

The vertical deviation indicator (glideslope indicator) (14) displays glideslope deviation in the ILS mode or, deviation in the ARA and TF mode, or deviation from the computed flight path in the VERNAV MODE. The vertical deviation warning flag (22) covers the vertical deviation scale (13) when an invalid condition for the selected ILS or ARA and TF mode exists.

An artificial horizon (3), on the sphere, is provided to indicate roll and pitch and is referenced to the miniature airplane (4). A bank pointer (8) is provided to accurately determine roll angle.

The pitch steering bar (15) displays steering information which is derived in the flight director computer by blending command signals from guidance receivers or computers with stabilizing parameters.

The bank steering bar (9) displays steering information which is derived in the flight director computer by blending command signals from guidance receivers or computers with stabilizing parameters.

The flight director (FD) warning flag (23) indicates a loss of input signal validity to the FDC, loss of power to the FDC, or failure of the FDC.

The pitch trim knob (5) adjusts the position of the attitude sphere in the pitch axis.

The turn and slip indicator (6) indicates rate-of-turn and turn coordination of the airplane. The rate-of-turn warning flag (24) indicates that the rate-of-turn gyro has failed.

The altitude indicator (runway symbol) (16) displays radar altitude information. It moves vertically so that the top edge of the indicator coincides with the bottom edge of the miniature airplane at touchdown.

The GYRO flag (25) indicates loss of AHRU vertical validity, or an attitude servo malfunction in the ADI, or loss of power to the ADI.

The ILS approach bullseye (19) comes into view in the ILS or ARA modes in conjunction with Autopilot operations to display both localizer and glide slope deviations during final approach to landing.

The bullseye moves independently of the attitude sphere to indicate vertical displacement from glideslope. The attitude sphere rotates horizontally to indicate localizer deviation.

The speed deviation indicator (18) indicates that the airplane speed relative to a pre-selected VSFI command speed or station keeping position. The minus (-) on the speed deviation scale (17) indicates the airplane is slower than the selected speed or that the station keeping distance is greater than selected and an increase in speed is required. The plus (+) indicates that the airplane is faster than the selected speed or the station keeping distance is less than selected and a decrease in speed is required. Each graduation on the speed deviation scale is ±5 knots in airspeed or ±125 feet in the station keeping mode. The speed deviation warning flag (26) comes into view in the event of an invalid SKE signal.

The pilot's ADI receives 115-volt AC power from the AC emergency bus (figure 1-61).

The copilot's ADI receives 115-volt AC power from the navigation AC bus No. 2 (figure 1-69).

Pilot's and Copilot's ADI Mode Lights Dimming Knobs.

Control of the pilot's and copilot's ADI lighting is accomplished by rotating the PILOTS ADI MODE LT and COPILOTS ADI MODE LTS knobs located on the pilots overhead panel (figure 1-76). The pilot's INSTRUMENT dimming knob must be rotated to ON, the THUNDERSTORM switch "OFF" and the annunciator panel INDICATOR LIGHTS switch must be in "DIM" to operate either ADI MODE LT knob. The pilot's ADI dimming knob controls 5-volt DC power from the No. 1 flight director and the copilot's ADI dimming knob controls 5-volt DC power from the No. 2 flight director.

PERIPHERAL COMMAND INDICATOR (PCI).

A PCI (figure 1-110) is located beneath the pilot's and copilot's glareshield. The indicator provides pitch and roll commands, by movement of white diamond patterns. These pitch and roll commands are the same flight director computer commands displayed by the ADI command steering bars.

The pilot's PCI receives 115-volt AC power from the No. 1 navigation AC bus (figure 1-69). The copilot's PCI receives 115-volt AC power from the No. 2 navigation AC bus (figure 1-69).

PCI Controls.

POWER SWITCH. Placing the switch to "ON" energizes the PCI. Placing the switch to "OFF" removes power from the PCI and causes the shutter to cover the indicator.

PCI DIMMING KNOB. A rotary DIM knob located under the power switch is used to control the intensity of the PCI integral lighting.

PCI Indicators.

PCI DISPLAY SHUTTER. A black shutter completely covers the PCI when an invalid signal exists in the flight director computer, or when the PCI is turned off.

PCI Normal Operation.

The PCI is armed by placing the power switch to the "ON" position. The shutter obscures the aperture unless both pitch and roll outputs are on and valid.

During the PCI operation, a pitch command from the flight director computer causes the diamond pattern to move continuously up or down until the airplane attitude is changed to satisfy the pitch command. The rate of pattern movement is proportional to the amount of the command signal. The pattern becomes stationary when the airplane has pitched the correct amount.

A roll command from the flight director computer causes the diamond pattern to move continuously left or right until the airplane attitude is changed to satisfy the roll command. The rate of pattern movement is proportional to the amount of the command signal. The pattern becomes stationary when the airplane has rolled the correct amount.

A composite command from the flight director computer causes the diamond pattern to move in the direction determined by the vector sum of the pitch and roll commands. The rate of pattern movement is proportional to the amount of the resultant vectored command signals. The pattern becomes stationary when the command signals are satisfied.

The velocity of the pitch and roll displays is limited to a perceivable rate.

NAVIGATION SELECTOR PANELS (NSP).

Two navigation selector panels (figure 1-111), located on the pilot's and copilot's glareshield, contain the controls and indicators for selecting and monitoring the navigation operating modes for the flight director system (FDS) and autopilot.

The FLT DIR TEST pushbutton is a momentary contact type. All of the pushbuttons, except the HDG and FLT DIR TEST, are mechanically interlocked so that depressing a pushbutton while another is actuated causes the latter to return to its off position. All of the pushbuttons, except the FLT DIR TEST pushbutton, are illuminated with a white light when depressed to indicate the mode selected. Individual navigation mode selector switch positions and their effect on the FDS are discussed in the following paragraphs, and the operation described applied to either of the two flight director systems. The pilot's switches control inputs to the No. 1 system and the autopilot, and the copilot's switches control inputs to the No. 2 system.

VERNAV Mode Indicator.

The VERNAV mode indicator lights on the pilot's and copilot's navigation selector panels are controlled by the IDNE. The VERNAV lights will go out when the IDNE VERT ANGLE ERROR indicator light comes on, or if any of the conditions necessary for vertical navigation operation no longer exist.

Navigation Selector Panel Dimming Control.

A rotary DIM control is used to control the pushbutton and mode indicator lighting.

AUXILIARY NAVIGATION SELECTOR PANELS (ASNP).

On airplanes modified by T.O. 1376, two auxiliary navigation selector panels are installed on the pilot's and copilot's glareshield. Each panel contains pushbuttons for selecting flight director altitude hold mode or VOR cruise mode, a dimming knob and a lamp test switch. The controls on these panels are described as follows:

VOR Cruise Pushbutton.

The VOR CRS pushbutton is used to engage the VOR cruise mode. When all interface parameters are satisfied and the mode is ready to function, the legend light in the pushbutton comes on. The on light comes on when the pushbutton is depressed and the mode is functioning.

Altitude Hold Pushbutton.

The ALT HOLD pushbutton is used to engage the flight director altitude hold mode. When valid altitude and attitude signals are being received by the flight director computer, the legend light in the pushbutton comes on. The on light comes on when the pushbutton is depressed and the mode is engaged. The pitch steering bar on the ADI will then display steering commands to maintain the altitude at the time of mode engagement.

Dimming Knob.

A rotary DIM knob is used to control the intensity of the lamps in the VOR CRS and ALT HOLD pushbuttons.

Lamp Test Switch.

A pushbutton LAMP TEST switch is depressed to test the lamps in the VOR CRS and ALT HOLD pushbuttons.

VERTICAL SCALE FLIGHT INSTRUMENTS (VSFI).

The pilot's and copilot's instrument panels are equipped with independently operated vertical scale flight instruments. Pitot and static information is resolved in the CADC's. Dual speed (coarse and fine) synchro signals from the CADC's are received by the airspeed, Mach and altitude indicator servos. The vertical speed indicators servo signal comes from the CADC altitude rate generators. The angle-of-attack indicators servo receives a DC analog signal from the go-around computer.

All displays, except the vertical speed, have a monitoring system. The IAS, Mach number and altitude displays have CADC-VSFI in-line monitoring using monitor synchros. These displays, and the angle-of-attack display, have self-contained display monitoring. The VSFI's have BITE capabilities initiated by a manual test switch. The BITE tests the trip level of the airspeed, Mach, angle-of-attack and altitude monitor amplifiers and drives all of the tapes to pre-set test displays.

The airspeed, Mach, and altitude command markers are driven by signals from the AFCS control panel slew switches. The Mach command marker can also be driven by the EMAC through AFCS control panel switching. The airspeed and Mach command markers on one VSFI can be slaved to the respective marker on the other VSFI. All of the markers can be driven and held at the fixed index line by a synchronous signal. The VSFI's sends differential airspeed, Mach and altitude signals to the AFCS. A separate differential airspeed signal is sent to the FD computer.

The pilot's VSFI's receive 115-volt AC power from the emergency AC bus (figure 1-61). The pilot's

VSFI BITE power comes from the 28-volt avionics DC bus No. 2 (figure 1-69).

The copilot's VSFI's receive 115-volt AC power from the navigation AC bus No. 2. The copilot's VSFI test power comes from the 28-volt avionics DC bus No. 2 (figure 1-69). An electrical or mechanical malfunction of one indicator will not affect any other VSFI.

Airspeed—Mach Indicator (AMI).

The Airspeed-Mach indicators (AMI) (figure 1-110) display Mach number and airspeed as resolved by the CADC's. Angle-of-attack data is derived from externally mounted angle-of-attack sensing vanes and the go-around computer.

Angle-of-attack data is displayed to the pilots on a moving scale (1) against a fixed index line (7). The scale is graduated from -15 to +30 in one-unit increments. An angle-of-attack warning flag (15) extends into view any time invalid angle-of-attack data or computer failure occurs.

The Mach indicator (2) displays true Mach from 0.1 to 1.0 Mach in hundredths-of-Mach increments. Each one-tenth Mach increment is numbered. A command Mach marker (5) may be adjusted to any Mach number between 0.2 to 0.85. The command Mach digital readout window (11) displays the selected Mach number. A fixed index line (7) is the point at which the airplane Mach performance may be read at any time. A chartreuse and black hashed maximum recommended Mach marker (13) is painted on the Mach scale at 0.825 Mach. The Mach warning flag (14) comes into view any time invalid Mach information is displayed.

Airspeed is displayed on a moving scale (3) and is read under the fixed index line (7). Calibrated airspeed is displayed from 30 to 500 knots in 10-knot increments. The command airspeed is displayed from 50 to 500 knots. The command airspeed marker (4) will position itself over the moving scale (tape) in accordance with the value set in the command airspeed digital readout window (9), if that value is in view. If that value is not in view on the tape, the command marker is positioned at the top or bottom of the tape depending on the value set. When that value comes into view, the command marker follows the tape. By aligning the command marker with the fixed index line (7), the preset airspeed has been attained. A chartreuse and black maximum recommended airspeed marker (8) is painted on the airspeed scale on the 350-knot increment. The airspeed warning flag (6) comes into view anytime the displayed airspeed is invalid.

When power is applied to the airplane, the MASTER POWER, MACH HOLD/ADJ and IAS HOLD/ADJ legends on the AFCS CONTROL panel will become illuminated. Illumination of these legends indicates to the pilot and copilot that manual slewing of their respective IAS and MACH VSFI's is available.

The pilot's and copilot's IAS and Mach command markers can be slewed by actuating their respective momentary IAS MACH REF switch on the AFCS CONTROL panel (figure 1-49). Each of these switches have five positions which are "INCR" and "DECR" for slow slew, "INCR," and "DECR" for fast slew and center OFF. The normal sequence for slewing in command IAS and Mach numbers is described below.

AFCS PANEL CONTROLS	RESULT/MODES AVAILABLE/ACTION
Airplane Power - ON	MASTER POWER, MACH HOLD/ADJ and IAS HOLD/ADJ legend is illuminated. The letter "A" will appear in the digital readout window on each IAS indicator. The Mach command marker on each Mach indicator will slew toward the EMAC computed Mach number and the letter "C" (12) will appear in each Mach digital readout window and the computed Mach number will be indicated.
IAS HOLD/ADJ - ON	The IAS legend in the MACH/IAS transfer pushbutton becomes illuminated. The letter "C" will appear in the digital readout window on each IAS indicator.
Slewing Switch	The IAS command marker on the pilot's or copilot's VSFI can now be slewed to some specific IAS by moving the slewing switch to "INCR" or "DECR" until the digital readout displays the selected IAS.
MACH HOLD/ADJ - ON	The Mach command bar will start to slew toward the fixed index line and the letter "A" will appear and remain in the Mach digital readout window until the command marker reaches the fixed index line. At this point, the ON legend in the MACH HOLD/ADJ pushbutton will illuminate and the letter "A" will change to "C". The MACH legend in the MACH/ILS transfer pushbutton illuminates and the ON legend in the IAS HOLD/ADJ pushbutton extinguishes.

AFCS PANEL CONTROLS	RESULT/MODES AVAILABLE/ACTION
Slewing Switch	The Mach command markers on the pilot's and copilot's VSFI can now be slewed to some specific Mach number by moving the slewing switch to "INCR" or "DECR" until the digital readout displays the selected Mach.

WARNING

Airspeed command markers are to be used only as a reference. In the event of a marker malfunction, it is possible for the marker to drift off the desired setting. Digital readouts may not change. Attempt to remove the marker from view when it is unreliable.

Altitude–Vertical Velocity Indicator (AVVI).

The AVVI (figure 1-110) displays vertical velocity, vernier (fine) altitude, gross (coarse) altitude and command altitude. Vertical velocity is displayed on an indicator (1) that has a fixed scale (16) and a moving scale (14). The fixed scale is graduated in 100 FPM marks to 1,500 FPM. Rates in excess of 1,500 FPM are read on the moving scale which goes to +20,000 FPM (top moving scale) and -20,000 FPM (bottom moving scale). The moving scale is numbered 2, 3, 4, 5, 6, 10, 15, and 20 indicating thousands of feet rate-of-climb or descent. The moving index (17) will be positioned at the top or bottom window during vertical velocities in excess of 2,000 FPM and on the fixed scale from vertical velocities of zero to 2,000 FPM. Altitude is displayed on two tapes as vernier altitude (2), and gross command altitude (3). The vernier indicator has a continuous tape (5) numbered every 100 feet with a graduation mark every 50 feet. The gross altitude indicator has a fixed tape (4) numbered from -1,000 feet to 50,000 feet. This scale is numbered every 1,000 feet to 50,000 feet. This scale is numbered every 1,000 feet with a 500-foot graduation mark. Altitude is read on both indicators at the fixed index lines (6 and 15).

A barometric (BARO) set knob (12) is provided to set the barometric pressure. By turning the BARO set knob, a corresponding change will be made on the altitude scales. Barometric corrections can be made from 28 to 31 inches of Hg. Any error noted, when correct local pressure is set, may be corrected by an altitude zero adjustment screw (11) located adjacent to the BARO set knob. This adjustment should only be accomplished by qualified maintenance personnel. The command altitude marker slewing operation is similar to that of the Mach or airspeed command markers. However, the two, three-position ("INCR", center OFF, "DECR") ALT SEL REF toggle switches (figure 1-49) located on the AFCS control panel are used together with the ALT MAN pushbuttons (figure 1-49) located above the switches. The appropriate ALT MAN ON pushbutton must be illuminated before slewing can be accomplished. During the slewing operation, the command altitude marker (8) is positioned over the same altitude on the scale as that set into the digital readout window. If the selected altitude is above or below the visible values on the scale, the command marker will be positioned at the top with the higher altitude or the bottom with the lower altitude. As the selected altitude comes into view on the tape, the command marker will be picked up and move along with the tape. With any selected altitude set into the readout window, any changes in flight altitude will cause the command marker to follow the set altitude as long as that altitude is visible on the tape. The left-hand side of the command altitude digital readout window has a two-position annunciator (10) that displays the letter "A" for actual altitude when the command marker is in the synchronous mode. The annunciator displays the letter "C" for any other altitude mode. When the command altitude marker is in the synchronous mode, the command marker slews to the fixed index line and the actual altitude is read at the index line and in the command altitude digital readout window. The altitude warning flag (7) comes into view when invalid altitude information is displayed.

VSFI Test Operation.

VSFI Test Switches.

Note

The CADC's must be operating before the VSFI test is started. CADC signals bring the tapes back to the before-start-of-test condition.

Four momentary (spring-loaded to the "NORM" position) VERT SCALE FLT INST switches (figure 1-114), two on the pilot's side console and two on the copilot's console, are used to test the operation of the altimeter, vertical velocity, airspeed and Mach indicators. When the pilot's ALTM test switch is placed to "MANUAL TEST", test point signals are sent to the pilot's VSFI's.

After no more than 150 seconds of slewing, the following test point signal data will be displayed:

Altitude	50,000 (±40) feet
Vertical Velocity	-12,000 (±600) feet
Indicated Airspeed	225 (±5) knots
Mach Number	0.92 (±0.01) Mach
Warning Flags	Out of View

Note

The barometric setting must be set to 29.92 prior to the start of the VSFI test.

When the test switch is placed to "MON TEST," the setting of the VSFI monitor is verified and the warning flags appear in the pilot's VSFI's. The copilot's VSFI test switches operate in a like manner.

VSFI Normal Operation.

If the pilot and copilot VSFIs disagree during normal operation, but no VSFI warning flag or CADC INOP light is on, a pitot-static system may have failed. Compare the navigator's IAS indicator with the pilot and copilot VSFI to isolate the failed pitot-static system.

CENTRAL AIR DATA COMPUTER (CADC) SYSTEMS.

Two independently operating CADC systems are installed on the airplane. The CADC's are modulized electro-mechanical analog computers. They receive inputs of static and total pressure from the airplane pitot-static system, and electrical inputs of total temperature from a total temperature probe. These inputs are used by the computers to provide output signals which are functions of altitude, Mach number, indicated airspeed, true airspeed, differential pressure and static air temperature.

The CADC's supply output signals to the following subsystems:

CADC NO. 1 (Pilot)	CADC NO. 2 (Copilot)
AHRU	AHRU
AIR CONDITIONING CONTROL (LEFT SYSTEM)	AIR CONDITIONING CONTROL (RIGHT SYSTEM)
AUTOPILOT	AUTOPILOT
CDPIR	EMAC
FDS NO. 1	FDS NO. 2
FLIGHT AUGMENTATION	FLIGHT AUGMENTATION
GO-AROUND COMPUTER	GO-AROUND COMPUTER
HEAT EXCHANGER COOLING AIR TEMPERATURE CONTROL	HEAT EXCHANGER COOLING AIR TEMPERATURE CONTROL
IDNE PRIMARY COMPUTER	IDNE AUXILIARY COMPUTER
IFF	
LANDING GEAR WARNING	LANDING GEAR WARNING
MADAR	MADAR
NAVIGATOR'S TRUE AIRSPEED	NAVIGATOR'S TRUE AIRSPEED
	NAVIGATOR'S VERTICAL SPEED
RUDDER LIMIT CONTROL	RUDDER LIMIT CONTROL
STALLIMITER	STALLIMITER
VSFI's	VSFI's

The foregoing subsystems receive the signals representing the following functions within the ranges listed below:

Altitude	-1,300 to +50,000 feet
Altitude Hold	±500 feet
Differential Pressure	0.12 to 14.0 inches Hg
Indicated Airspeed	50 to 500 knots
Airspeed Hold	±20 knots
Mach Hold	±0.05 Mach
Mach Number	0.2 to 1.0 M
Rate-of-Climb	0 to ±20,000 feet per minute
Static Air Temperature	-100 to +60°C
True Airspeed	100 to 600 knots

Each CADC provides a signal to its respective air conditioning system, during ground operation or inflight operation below Mach 0.3, when ram air is insufficient or not available to adequately cool the heat exchangers. These signals cause the turbine-tipped cooling fans, in the ram air ducts, to start operating and the cooling air exit valve to open. They also provide TAS signals to the navigator's TAS indicator.

Except for navigator's TAS no provision is made for switching the outputs of one CADC to furnish signals normally supplied by the other CADC. The navigator can select "CADC No. 1" or "CADC No. 2" on his TAS indicator panel and his TAS indicator will display speed from the selected CADC. If one system becomes inoperative, the VSFI displays and CADC inputs to its using systems are not available from an alternate source. See Section III for systems that are not available.

Both systems begin operating when power is applied to the airplane electrical buses.

CADC system No. 1 receives 115-volt AC power from the emergency AC bus (figure 1-61).

CADC system No. 2 receives 115-volt AC power from the navigation AC bus No. 2 (figure 1-69).

Each system has a self-test feature to ensure that the system is operating within specified limits. The CADC test switch circuits are interlocked through touchdown relays to ensure that the test function cannot be inadvertently activated while the airplane is in flight.

CADC Test Switches.

Two momentary (spring-loaded to the "NORM" position) CENTRAL AIR DATA COMPT switches (figure 1-114), one on the pilot's side console and one on the copilot's console, are used to test the operation of the CADC systems. When the test switch on the pilot's console is placed to "MANUAL TEST," the CADC will send test point signals to the pilot's VSFI's, the navigator's TAS indicator and to the EMAC.

The VSFI's will drive to the following values:

Airspeed	- 318 (±7) KCAS
Mach	- 0.92 (±0.03) Mach
Altimeter	- 35,000 (±200) feet
Navigator TAS	- 560 (±15) KTAS

During the time the CADC is slewing to and from the test points, the warning flags will appear in the pilot's VSFI's and the CADC No. 1 light on the pilots' annunciator panel will come on. When the test switch is placed to "MON TEST," the setting of the CADC airspeed monitor is verified, the warning flags appear in the pilot's VSFI's, the CADC No. 1 annunciator light comes on and the CADC TAS NOT VALID light on the navigator's TAS INDICATOR panel comes on provided the CADC selector switch on this panel is in the "NO. 1" position. The copilot's CENTRAL AIR DATA COMPT test switch operates in a like manner except that the CADC selector switch must be in the "NO. 2" position before the CADC TAS NOT VALID light comes on.

CRASH DATA POSITION INDICATOR—RECORDER

A crash data position indicator recorder (CDPIR) system is provided. Its purpose is to minimize the time required to locate a downed airplane, and to provide an accurate, recoverable record of voice transmissions and selected airplane operational parameters. A releaseable airfoil assembly located on top of the horizontal stabilizer contains a recorder and an emergency beacon transmitter. The recorder is capable of preserving both audio and digital data on magnetic tape for future playback.

The CDPIR system consists of a control monitor panel, an electronic unit, an airfoil assembly, a mount assembly, a remote microphone, area microphone unit panel, vertical and horizontal accelerometers, and five frangible switches. Each of these components are discussed below. The CDPIR receives 115-volt AC input power from the isolated AVIONICS AC bus (figure 1-69), 26-volt AC power from the emergency AC bus (figure 1-61), and 28-volt DC power from the isolated avionics DC bus (figure 1-69).

CONTROL MONITOR PANEL.

The CDPIR CONTROL MONITOR panel (figure 1-115) provides a means of rapidly determining the status of

the operational parameters of the CDPIR and provides the charging voltage necessary to maintain the beacon battery at proper operating voltage. The panel also provides a beacon transmit test function for preflight checkout, and built in test features to determine the operational status of the beacon battery, recorder, release mechanism, beacon transmitter and battery heater circuit.

The CDPIR provides selective recording of 19 flight data parameters and continuous recording of four voice channels. Only the last 30 minutes of recording is retained. When the airfoil assembly is released, the recorder will include the last 30 minutes of flight data.

ELECTRONICS UNIT.

The electronics unit (figure 1-81) provides the means to format and serialize selected analog input signals and conditions these signals for recording on a magnetic tape. Selected analog parameters from AHRU No. 1, CADC No. 1, and two CDPIR accelerometers are converted to digital form. Digital inputs from the MADAR system are serialized and recorded. The unit contains an integral test panel to test the functional operation of the MADAR, analog and clock channels.

In the event that the No. 1 AHRU heading signals become invalid, heading inputs can be supplied from the IMU/IDNE by selecting the "IMU" position of the input selector switch on the pilot's HAMS control panel (figure 1-107). Refer to the Heading and Attitude Monitor System (HAMS) paragraph in this Section for information on this mode of operation.

AIRFOIL ASSEMBLY.

The airfoil assembly (figure 1-115) is a releaseable unit containing a magnetic tape recorder unit, a UHF beacon transmitter, a battery pack and a beacon antenna. The airfoil itself is a molded fiber-glass unit filled with polyurethane foam. It is aerodynamically shaped and constructed to withstand severe loads incident to aerial release and terminal impact with a high probability of survival. The UHF beacon transmitter transmits a sliding audio signal on the international distress frequency (243.0 MHz) immediately upon separation from the airplane.

AIRFOIL MOUNTING ASSEMBLY.

The airfoil mounting assembly located in the top surface of the aft horizontal stabilizer bullet fairing (figure 1-115) contains the airfoil assembly release unit, a recorder electronics unit, a thermostatic switch, and a hydrostatic switch. The airfoil release unit is a spring-loaded, electrical solenoid operated unit that provides positive latching of the airfoil assembly until a deploy signal is received. Upon actuation, the airfoil release unit provides the force necessary to push the airfoil into the airstream. The recorder electronics unit supplies the power to drive the recorder, and also provides a recorder monitor capability. The thermostatic switch actuates the airfoil release mechanism at a minimum temperature of 110°C. The hydrostatic switch actuates the airfoil release mechanism when it is submerged in a minimum of 7-12 feet of water.

FLIGHT DECK MICROPHONE UNIT.

This unit consists of two components: the area microphone and the area microphone unit. The area microphone (figure 1-115) is located on the top of the forward center portion of the pilot's glareshield. It is used to monitor the flight station conversations. The area microphone unit (figure 1-115) accepts input signals from the pilot, copilot, observer and flight engineer through the interphone system and input signals directly from the area microphone. The amplified signals are transmitted directly to the recorder. A built-in test function is provided to determine the operational status of the amplifier circuit.

VERTICAL AND HORIZONTAL ACCELEROMETERS.

These units provide vertical and horizontal input acceleration data to the electronics unit.

FRANGIBLE SWITCHES.

There are five frangible switches: one in the nose section, one in each wingtip, and one in each landing gear pod. These switches will actuate upon impact. Rupture of any one of the switches is sufficient to release the airfoil assembly.

CDPIR SYSTEM CONTROLS AND INDICATORS.

The CDPIR CONTROL MONITOR panel is located on the center console (figure 1-115). It contains the controls and indicators for operating, monitoring, and testing the system. Following is a description of the controls and indicators:

Transmitter Test Pushbutton.

The TEST XMIT pushbutton is used to test the beacon transmitter. When the pushbutton is depressed a variable tone is heard on the UHF guard channel.

Deploy CDPIR Switch.

The guarded, two-position DEPLOY CDPIR toggle switch is used to deploy the airfoil assembly manually. Raising the guard and actuating the switch manually deploys the airfoil assembly. With the guard down, the switch is in the normal position for automatic deployment of the airfoil assembly.

Battery Heater Warning Light.

An amber HEATER WARNING light comes on in the event of a battery heater circuit malfunction.

Battery Test Switch.

A three-position rotary TEST BATTERY switch is used to check the battery pack voltage and charging current. The switch is spring-loaded to the center position. Rotating and holding the switch to the "VOLTS" position should cause the green BATTERY TEST light to come on if the battery voltage is within the specified tolerances. Rotating and holding the switch to the "CHG" position should cause the BATTERY TEST light to come on if the battery charging circuit is operating properly.

Recorder Malfunction Light.

An amber REC MAL light comes on if the airfoil recorder is not operating properly during CDPIR operation.

CDPIR Deploy Light.

A red DEPLOY CDPIR light comes on when the airfoil has been released. The light also comes on if the battery shut-off switch on the airfoil was left in the off position.

a-dd - Su 15-89

Area Microphone Unit.

The area microphone unit is located on the overhead console. It contains two BITE functions described as follows:

AREA MICROPHONE BITE PUSHBUTTON. The area microphone BITE pushbutton is depressed to check out the operation of the audio amplifier.

AREA MICROPHONE BITE INDICATOR LIGHT. A green area microphone BITE indicator light comes on if the audio amplifier is operating properly during the BITE test.

CDPIR System Normal Operation.

As soon as power is supplied to the airplane, the CDPIR begins to operate. The recorder begins to record the cockpit conversation and 19 flight data parameters continuously and retains the last 30 minutes of the recording on magnetic tape. The HEATER WARNING, REC MAL, and DEPLOY CDPIR lights are monitored by the pilots to check the operation of the system.

ENERGY MANAGEMENT SYSTEM.

The energy management system is a cruise control system which provides visual displays of computed cruise data and controls the EPR and MACH command markers to obtain optimum airplane performance. The system consists of the energy management analog computer (EMAC) with the integral control panel which is installed in the navigator's console (figure 1-116). The system receives 115-volt AC power from the avionics AC bus No. 1 26-volt AC power from the 26-volt AC navigation bus No. 1 and 28-volt DC power from the avionics DC bus No. 1 (figure 1-69). The energy management system is energized whenever power is on the airplane.

MODES OF OPERATION.

There are three basic modes of operation: constant altitude, optimum altitude, and endurance.

Constant Altitude Mode.

In the constant altitude mode, the computer utilizes manually inserted values of cargo weight, operating weight, reserve fuel weight, total fuel weight, average wind, and automatically inserted values of altitude, airspeed, Mach No., total temperature, static temperature, and fuel flow. From these values the computer provides a Mach command on the pilot's and copilot's VSFI's which will result in 99% maximum range at the existing altitude. The computer also provides indications on the panel face for current fuel time (fuel time remaining in hours) and range remaining (in nautical miles). CFT (current fuel time) and RR (range remaining) are a function of mission fuel remaining (total fuel weight minus reserve fuel weight) and are derived by the computer using manually and automatically inserted flight parameters and stored airplane range performance data. Since the computer computations are based on existing altitude and command Mach, CFT and RR values will be valid only if the airplane is flown at the command Mach plus the Mach correction input to EMAC and specific range adjust is set to a ratio of 1.00.

Optimum Altitude Mode.

In the optimum altitude mode, the computer utilizes the same inputs and provides a Mach command based

on a cruise climb. In this mode, optimum altitude is displayed on the EMAC panel. This will be a continually increasing value. Since a cruise climb profile is not always practical, the values of CFT and RR are based on a step climb of 2,000 foot increments below 29,000 feet and 4,000 foot increments above 29,000 feet. The step climb procedure is to remain at the existing altitude until the optimum altitude display is 2,000/4,000 feet higher than airplane altitude, then climb at NRT and 270 KCAS/0.70 Mach (whichever is less) until the airplane altitude is the same as the optimum altitude indication. In this mode CFT and RR values are based on the assumption that step climb will be made at 270 KCAS/0.70 Mach using commanded EPR and level flight will be flown at command Mach. The Altitude Select knob (when pulled out) has no effect on CFT or RR in the optimum altitude mode.

Endurance Mode.

In the endurance mode, the computer utilizes the same inputs as above and provides a command Mach that will result in maximum endurance at the existing altitude. The optimum altitude display will indicate the best altitude for maximum endurance. In this mode, the values of CFT and RR are the same as if the computer were in the constant altitude mode. When holding at maximum endurance airspeed, this provides the capability of monitoring the range remaining and current fuel time computed on long range cruise Mach at the existing altitude.

In all three of the above modes, the EMAC will provide an EPR command to the pilots's and flight engineer's EPR indicators whenever the EPR switch is in the "EPR AUTO" position. This EPR command indicates the computed NRT for the existing altitude and temperature. In the GO-AROUND mode, the EMAC will provide an EPR command for go-around EPR with the EPR switch in "EPR AUTO." With EPR switch in "EPR MANUAL," the EPR command is controlled by a slew switch on the flight engineer's panel.

EMAC CONTROLS AND INDICATORS.

The EMAC controls and indicators can be divided into several related groups as follows:

Group 1 - Those that are used to program the computer prior to take-off according to a predetermined flight plan

Group 2 - Those that are used to display values for optimum cruise control information and those that are used to compare actual flight progress with planned flight progress

Group 3 - Those that are used to change or update the flight plan or to make minor cruise control adjustments

Group 4 - Those that are used to test and monitor EMAC operation

Group 1 Controls and Indicators.

EPR SELECT SWITCH. The EPR select switch is used to select either manual slewing or automatic slewing of the EPR command markers. In the "EPR MANUAL" position, the EPR command markers are slewed by a two-speed EPR SLEW switch on the hydraulic systems control and indicator panel (figure 1-35). In the "EPR AUTO" position, the EPR command markers are slewed automatically by EMAC signals to a position corresponding to NRT. In the go-around mode of the Go-Around Subsystem, the EMAC will provide an EPR command for go-around with the EPR switch in the "EPR AUTO" position.

ENGINE SELECT SWITCH. The engine select switch is used to select EMAC displays for either 3 or 4 engine operation. In either the 3 ENGINE or 4 ENGINE position, the EMAC computations will be based on the position selected.

MODE SELECT SWITCH. The mode select switch is used to select one of the three modes of EMAC operation as described previously.

CARGO WEIGHT CONTROL AND DISPLAY. The cargo weight control and display are used to manually insert the total cargo weight prior to flight.

OPERATING WEIGHT CONTROL AND DISPLAY. The operating weight control and display are used to manually insert the basic airplane operating weight prior to flight.

TOTAL FUEL WEIGHT CONTROL AND DISPLAY. The total fuel weight control and display are used to manually insert the weight of the total fuel load (including reserve fuel) aboard the airplane prior to flight. The control is pulled to set and pushed in to operate.

RESERVE FUEL WEIGHT CONTROL AND DISPLAY. The reserve fuel weight control and display are used to manually insert the computed fuel reserve weight determined prior to flight.

AVERAGE WIND CONTROL AND DISPLAY. The average wind control and display are used to manually insert the computed average wind for the entire mission into the computer prior to flight. This value must be in the form of a headwind or tailwind component and must be updated periodically during the flight as required.

STATIC TEMPERATURE CONTROL, DISPLAY, AND LIGHT. The EMAC utilizes temperature information from externally mounted probes. While the airplane is on the ground, these temperature probes are subject to solar heating and would, in this condition,

provide erroneous information. The Static Temperature control is used to manually insert the correct ambient temperature into the computer for EPR computation only. If a manual temperature adjustment is required, use actual outside air temperature for ground operations and total temperature (IOAT) for inflight operations. Pulling the control out and rotating it until the correct temperature is displayed in the adjacent window will provide the computer with the correct temperature reference. A manual temp light, adjacent to the control will illuminate whenever the control is pulled out. Pushing the control in restores the temperature signal from the external probes and causes the manual temp light to extinguish. When the control is in, static temperature, as computed by the CADC, will be displayed in the adjacent window.

Group 2 Controls and Indicators.

OPTIMUM ALTITUDE DISPLAY. In the constant altitude and optimum altitude modes, optimum altitude is displayed based on the airplane 300 FPM cruise ceiling and the number of engines selected. In the endurance mode, the optimum altitude is displayed for maximum endurance.

RANGE REMAINING DISPLAY. The range remaining display is operable in the constant altitude, optimum altitude, and endurance modes and displays the remaining range in nautical miles based on cruising at MACH command and climbing at EPR command.

CURRENT FUEL TIME DISPLAY. The current fuel time display is operable in the constant altitude, optimum altitude, and endurance modes and displays remaining fuel time (in hours) based on cruising at MACH command and climbing at EPR command.

PROGRAMMED FUEL TIME DISPLAY. The programmed fuel time display indicates the flight planned fuel time remaining. This information is received directly from the navigation subsystem. If the IDNE is not in the track steer mode or IDNE auxiliary computer is not on, a continuous flag display will be visible in the programmed fuel time display window.

On airplanes modified by T.O. 1575, the programmed fuel time display function has been deleted. The failure flag will cover the display at all times except during self-test.

Group 3 Controls and Indicators.

ALTITUDE SELECT CONTROL AND DISPLAY. The altitude select control and display are operable in the constant altitude mode. The control is used to select an altitude other than the existing altitude to provide current fuel time and remaining range for that selected altitude. When the PULL TO SET knob is pushed in, the display is shuttered, and the computer is utilizing existing altitude for RR and CFT computations. Pulling the knob out removes the shutter and allows an altitude to be selected. When the knob is pulled out, the computer utilizes the long range cruise mach and standard temperature of the altitude selected for range remaining and current fuel time computations. A mach correction can be applied if the commanded Mach will not be flown at the selected altitude.

MACH CORRECTION CONTROL AND DISPLAY. The Mach correction control and display are operable in the constant altitude and optimum altitude modes. The control is used to select a Mach number other than that commanded on the VSFI to provide current fuel time and remaining range for that selected MACH number. When the PULL TO SET knob is pushed in, the display is shuttered and the computer is utilizing command Mach for computations. Pulling the knob out removes the shutter and allows a Mach correction to be applied. When the knob is pulled out, the computer utilizes the command Mach plus the correction for computation. A + symbol preceding the correction indicates that the computer is utilizing the command Mach plus the correction. A - symbol indicates the computer is utilizing the command Mach minus the correction. For Example: if the command Mach is .74 and actual Mach is .72, a minus .02 will be inserted in the Mach correction window.

SPECIFIC RANGE ADJUST CONTROL AND DISPLAY. The EMAC contains information on predicted specific range for a standard airplane. The computer, utilizing existing values of fuel flow and true airspeed computes the actual specific range being attained. This is compared with the standard and displayed as a ratio of actual to standard. The standard may then be adjusted with the control to provide accurate computations of current fuel time and remaining range. Adjustment is made by pulling the knob out and rotating it until the display indicates 1.00 ratio. Pulling the knob out removes the shutter from the specific range adjust window and permits a correction to be made. The knob must be left out for the computer to use the correction. To accurately set the specific range adjust, constant altitude mode must be selected and the airplane must be at the EMAC commanded Mach. After the initial adjustment, any desired Mach can be flown providing a Mach correction is applied.

Group 4 Controls and Indicators.

SELF TEST BUTTON. The SELF TEST button is used to test the internal circuitry of the EMAC. The test is accomplished by manually inserting specific values of cargo weight, operating weight, reserve fuel weight and average wind. Depressing the SELF TEST button causes the TEST light to come on immediately. In a few seconds, the READ light will come on and the validity of the EMAC may then be verified by specific readouts of optimum altitude, current fuel time, and remaining range. The total fuel weight display will also begin to count down at a rate of 500 pounds per minute.

MONITOR TEST BUTTON. The MON TEST button is used to check that essential warning shutters are functioning properly. Depressing the button causes the EPR and EMAC fail lights to come on and causes warning shutters to cover the following display windows:

	Static Temperature
Optimum Altitude	Current Fuel Time
Pressure Altitude	Range Remaining
Programmed Fuel Time	Total Fuel Weight

EPR FAIL LIGHT. The EPR fail light will come on whenever the EMAC has sensed a failure in the EPR output signal.

EMAC FAIL LIGHT. The EMAC fail light will come on whenever the EMAC self monitoring circuits have sensed a malfunction rendering the EMAC inoperative.

EMAC CHECKOUT AND PROGRAMMING PROCEDURES.

Refer to Section IV, Navigator's Interior Inspection for EMAC preflight check and programming procedures.

MALFUNCTION DETECTION, ANALYSIS, AND RECORDING (MADAR) SUBSYSTEM.

A malfunction detection, analysis and recording (MADAR) subsystem is installed in the airplane to assist the flight crew and ground crew in inspecting the characteristics of airplane line replaceable units and systems for either degradation or failure, or both, inflight or on the ground. The MADAR subsystem is also programmed to automatically measure, and record, the performance characteristics of selected critical flight and subsystem parameters against the correct standard and announce to the operator the detection of excessive system degradation.

The data collected by the MADAR subsystem is used to establish long term failure trends to improve spares logistic support, as well as provide a useful tool for maintenance troubleshooting. A considerable reduction in airplane down time results, since the malfunction, impending malfunctions, and system degradation can be readily detected and spares can be allocated in advance for assuring rapid repair and replacement.

The MADAR subsystem is supplemental to the normal airplane instruments and warning devices and is designed to preclude interfering with the normal or emergency operation of other airplane subsystems. On all emergencies, time permitting, MADAR should be used as an aid to determine extent of system malfunction.

The MADAR subsystem (figure 1-117) consists of a control and sequencer unit (CSU), a data retrieval unit (DRU), an oscilloscope and digital readout unit (ODRU), a printout unit (POU), a central multiplexer adapter (CMA), a manual multiplexer (MMUX), automatic and manual signal acquisition remote units (SAR-A's and SAR-M's) a digital computer (DCOMP), and a maintenance data recorder (MDR).

The MADAR subsystem receives 115 VAC power from the forward main AC bus No. 4 (figure 1-65), 26 VAC power from the 26 VAC instrument bus 2 (figure 1-66), 26 VAC power from the 26 VAC nav bus 2 (figure 1-69), 28 VDC power from the main DC No. 1 bus (figure 1-68), and 115 VAC power from the aft main AC buses 1, 2, 3, and 4 (figure 1-70).

On 80211 through 00467 modified by T.O. 1365, 1377, and 1378, additional flight load and system operating parameter signal sources are provided and recorded. Data derived from the recording of these signals is used to indicate structural changes that may occur during the service life of the airplane, changes that may result from various conditions of use, changing environments, or operating procedures. This data can also be used as a basis for mission planning to insure maximum use of the airplane.

On 80211-through 00467 modified by T.O. 1377, two service loads recording system (SLR SYS) circuit breakers have been added to power the additional MADAR components. These circuit breakers provide 28 VDC power from the main DC No. 1 bus (figure 1-68) and 26 VAC power from the 26 VAC nav bus 2 (figure 1-69).

MADAR SUBSYSTEM COMPONENT FUNCTIONS AND CHARACTERISTICS.

The following is a brief description of the functions and characteristics of the primary MADAR subsystem components:

Control and Sequencer Unit (CSU).

The CSU (figure 1-119) is the major operator/subsystem interface device within the MADAR subsystem. It contains the controls and indicators required to use the automatic and manual functions of MADAR. Operation of MADAR subsystem components is accomplished by entering command data through the CSU control panel.

Data Retrieval Unit (DRU).

Information and instructions for operation of the MADAR subsystem are contained in a film pack in the DRU (figure 1-119). Operator selected film frames are visually displayed on the DRU and contain information such as MADAR start-up procedures,

subsystem diagnostic routines, test instructions, etc. In addition, each film frame contains phototransistor matrix digital coding, which is not visible to the operator. This digital coding controls film frame accessing and provides oscilloscope and digital voltmeter programming data.

Oscilloscope and Digital Readout Unit (ODRU).

The ODRU is integrated with the CSU and DRU to provide the operator with a visual display of wave forms and digital voltage readouts of test points monitored by the MADAR subsystem. Voltages displayed on the ODRU are 1/2 the value of the test point conditioned voltage. I.E., If the ODRU displays a voltage of -DC 1.25 the condition voltage of the test point being monitored is -DC 2.5 volts. In addition, when the DVM is programmed to display AC volts, it will display peak to peak volts.

Printout Unit (POU).

The POU is provided to display a semi-permanent malfunction and event record for flight crew and ground maintenance use. The POU receives digital print commands from the computer via the central multiplexer adapter. It converts these commands to alpha-numerical characters which are printed on photo-sensitive paper. POU printouts consist of messages such as line replaceable unit (LRU) failure and recovery announcements, takeoff and landing times and several special messages. In addition, POU will also print out messages that are initiated by the operator.

Central Multiplexer Adapter (CMA).

The CMA, located in the avionics compartment, serves as the major interface device between the MADAR subsystem automatic components. The CMA interfaces with the DCOMP, MDR, POU, MMUX, SAR-A's and CDPIR. It provides for the routing, digitizing and multiplexing of data between these units. The CMA also powers the SAR-A's and simultaneously accepts the log input signal from each SAR-A and digitizes them according to control signals from the digital computer.

Automatic Signal Acquisition Remote Units (SAR-A).

The SAR-A units are located throughout the airplane to monitor, conditon, and transmit one of 32 different test point signals (per unit) as analog inputs to the CMA. The SAR-A's are powered by the CMA as soon as power is supplied to the MADAR. The specific test point signal transmitted at a given time is controlled by digital computer through the CMA.

Manual Multiplexer (MMUX).

The MMUX, located in the avionics compartment, serves as the interface device between the MADAR subsystem components during manual MADAR operation. The MMUX will select and transmit two manual test point signals, from either one or two manual SAR's for simultaneous display. Additionally, the MMUX will transmit SAR-A test point data for display on the ODRU. Test point selection is made automatically by the matrix bits contained on the DRU film frames or by operator inputs using the CSU. The MMUX also supplies power to the SAR-M's.

Manual Signal Acquisition Remote Units (SAR-M).

The SAR-M units are located throughout the airplane to monitor, condition, and transmit, up to 32 different test point signals (per unit) to the MMUX.

Digital Computer (DCOMP).

The DCOMP, located in the avionics compartment, is a general purpose computer of 8,000 word memory capacity that performs data compression, addresses automatic test points through the CMA, determines LRU/system status and performs trend calculations. On 80211 through 00467 modified by T.O. 1377, the memory capacity of the computer has been increased to 16,000 words.

IDNE malfunction data is transmitted directly from the auxiliary computer to the DCOMP for recording on the POU and MDR.

Maintenance Data Recorder (MDR).

The MDR is located in the avionics compartment and is enabled by the MADAR/ON pushbutton located on the CSU. The MDR records trend data and the same LRU failure data as listed for the POU. The digital data is transferred from the CMA to the MDR which records this data on magnetic tape. The magnetic tape, when played back on a ground processing unit, provides data that is used in supporting maintenance and logistics operations. The MDR writes end-of-record (EOR) gaps on the magnetic tape on DCOMP command. The MDR has an automatic feature that tests for proper component function, detects that the MDR case is open, and checks for an MDR overheat condition. On 80211 through 00467 modified by T.O. 1377, the MDR recording speed has been doubled.

Pitch and Yaw Rate Gyro.

On 80211 through 00467 modified by 1377, a two-axis rate gyro, located in the avionics compartment, is used to sense airplane pitch and yaw signals for input to the signal conditioner/multiplexer.

Pitch Accelerometer.

On airplanes modified by T.O. 1377C, a pitch accelerometer (in lieu of a two-axis gyro), located in the avionics compartment (figure 1-81), is used to sense airplane pitch signals for input to the signal conditioner/multiplexer.

Signal Conditioner/Multiplexer.

On 80211 through 00467 modified by T.O. 1365 or 1378 a signal conditioner/multiplexer, located in the avionics compartment, provides conversion, amplification, and linearization of the additional flight load system operating parameter signal sources prior to input into the MADAR subsystem.

MADAR/IWBS Signal Conditioner.

On 80211 through 00467 modified by T.O. 1378, an IWBS signal conditioner is installed adjacent to the IWBS computer to condition IWBS signals for input to the signal conditioner/multiplexer.

Strain Gages.

On 80211 through 00467 modified by T.O. 1365, seven strain gages are installed in various locations on the right wing and fuselage to input structural load signals to the signal conditioner/multiplexer.

MADAR SUBSYSTEM CONTROLS AND INDICATORS.

Following is a description of the functions of the CSU controls, indicators and lights (figure 1-119).

System Status Indicator/Pushbuttons.

System status indicator/pushbuttons are used to indicate subsystem failures and to retrieve subsystem information and instructions. The 10 active indicator/pushbuttons represent the propulsion (PRPLN), environmental (ENVIR), secondary power (SEC PWR), mechanical (MECH), flight controls (FLT CONT), instrumentation (INST), malfunction analysis (MADAR), radar (RADAR), communications (COMM), and navigation system (NAV). Two spare pushbutton/indicators are installed for possible future use. The lights on the pushbuttons display PRINT and/or SELECT when on. The lights are off if no malfunction exists or no selection has been made by the operator. The PRINT light is controlled by the DCOMP and comes on whenever there is one or more system malfunctions with a system message to the POU and goes off when all the messages in the respective system(s) have been acknowledged. Depressing any one of these pushbuttons (PRINT light on or off) causes the SELECT light to come on for the system selected, and causes the selected system master film to be presented on the DRU for system diagnosis. The SELECT light, for the system selected, goes off when another system has been selected.

Keyset and Display.

Directly beneath the system status indicator/pushbuttons is the keyset display. This display has seven windows that display numbers set in with the 10 keyset pushbuttons located directly below the display windows. The keyset pushbuttons and associated display windows are used to control the operation of MADAR. When a multi-digit number is selected by use of the keyset pushbuttons, the first digit of the number appears in the right hand window. Entering the subsequent digits of the selected number causes all previously displayed digits to shift to the left one place. To enter a number, the most significant digit is entered first, then the next significant digit, until the entire number has been entered. If an error is made, the entire display is cleared by depressing the clear (CLR) pushbutton. When a desired number is displayed in the display windows, the execute (EX) pushbutton is pressed to initiate the desired functions.

Mode Pushbuttons.

The MODE PUSHBUTTONS located to the left of the keyset pushbuttons and display windows are used to select the mode of operation of the keyset and indicate how the number entered in the display is to be interpreted. Depressing a mode pushbutton causes the SELECT legend light to come on to indicate the selected mode of operation. The mode pushbuttons are inter-locked so that selection of a new mode clears the previously selected mode. Depressing the keyset EX pushbutton allows the keyset display number to be interpreted as data for the mode selected. A new mode selection is not necessary before each keyset entry is made as long as the new data is for the same mode as the previously entered data.

The following is a description of the mode pushbuttons:

CHOICE/SELECT. With this pushbutton depressed (SELECT light on) and any number from one through five (1-5) entered in the keyset display window, the corresponding choice data will be read from the film. This automatically accesses a new frame or sends a message from the displayed film frame to the DCOMP, when the operator depresses the keyset EX pushbutton.

CMA MESSAGE SELECT. The CMA MESSAGE/SELECT pushbutton is used to enter information into the automatic mode. Examples of these data are time, date, airplane serial number, etc. This operation requires that a seven digit number be entered in the keyset display window prior to depressing the EX pushbutton (figure 1-119).

FRAME ADDRESS/SELECT. The FRAME ADDRESS/SELECT pushbutton is used to select any of the frames in the film pack. To initiate this operation, the FRAME ADDRESS/SELECT pushbutton is depressed. The frame number of the desired frame is set in with the keyset pushbuttons and displayed on the keyset display windows, and the EX pushbutton is depressed. The desired film frame is then selected and displayed on the DRU.

MANUAL TEST POINT/SELECT. The MAN TEST PT/SELECT pushbutton enables the operator to select manual test points for display on the ODRU. An appropriate DRU film frame is required to enable presentation of a manual test point signal on the ODRU.

Function Pushbuttons.

The 12 pushbuttons located below the keyset pushbuttons are used to cause a unique function to occur in the MADAR system. These pushbuttons are not used in conjunction with the keyset pushbuttons. The following is a description of the function pushbuttons:

REPEAT PREVIOUS STEP. The REPEAT PREV STEP pushbutton is used to return the film pack to the last frame displayed.

FRAME ADVANCE. The FRAME ADVANCE pushbutton is used to advance the film pack to the next frame.

HOLD/SELECT. The HOLD/SELECT pushbutton is used to mark a frame. When the pushbutton is depressed the first time, the presently displayed film frame number is stored in memory and the SELECT light comes on. Any other DRU operation may be accomplished at this time. The next time the pushbutton is depressed, the film frame whose number was stored in memory is again displayed on the DRU and the SELECT light goes off.

PARITY ERROR. The PARITY ERROR pushbutton is used to re-access a film frame whenever the digital data on that frame was not interpreted properly. Each row of data on each frame has a parity bit associated with it. When the frame is accessed, the data is read. If a parity error is detected in any row, the PARITY ERROR light comes on indicating to the operator that the frame is not properly positioned or the digital data is unacceptable. If after depressing the pushbutton, the PARITY ERROR light goes off, the error was probably random. If the light stays on, check the film frame centering. If the frame is improperly centered, perform the DRU Centering Adjustment. If the frame is properly centered and the light stays on, the DRU is malfunctioning. When parity errors are encountered, ODRU measurements should be considered invalid.

LRU STATUS CHECK. The LRU STATUS CHECK pushbutton is used to obtain a list of LRU failure messages that are stored in the DCOMP. When the pushbutton is depressed, the entire failure list is printed on the POU.

PRINTER BACK-UP/SELECT. The PRINTER BACK-UP/SELECT pushbutton is used whenever the POU fails. Depressing the pushbutton causes the SELECT light to come on and enables the data path to the keyset display windows. The LRU STATUS CHECK pushbutton can now be depressed to route a stored LRU number to the keyset display windows. The operator writes down this number and then again depresses the LRU STATUS CHECK pushbutton to display the next stored failure message number. This procedure is continued until all the stored failure messages have been displayed. The end of the failure list is indicated by a series of nines displayed in the keyset windows. The printer back-up mode selection is cleared by depressing the PRINTER BACK-UP/SELECT pushbutton again.

Note

Prior to disengaging printer back up mode, depress the Keyset CLR pushbutton on the CSU. Failure to do so may result in erroneous DCOMP update messages.

BITE RESET. The BITE RESET pushbutton is used during the manual MADAR BITE routine to reset the BITE program. This pushbutton is used when required by instructions contained on the film pack or to restore the MADAR system to normal.

BITE/DRU/CSU. The BITE/DRU/CSU pushbutton is used to control the BITE test of the manual MADAR system. Instructions for performing the BITE test are contained in the film pack. During the BITE routine, the DRU or CSU portion of the pushbutton will come on if a malfunction is detected in either of these units.

FILM DISPLAY/ON. The FILM DISPLAY/ON pushbutton is used to turn the DRU on or off. During MADAR operation, the operator can turn the DRU off, without disrupting the automatic functions of MADAR.

PRESS TO TEST. The PRESS TO TEST pushbutton is used to test those lights on the CSU, DRU, ODRU and POU that are not controlled by the flight engineers lower panel light control. This pushbutton may be depressed any time the MADAR is operating to test the indicator lamps.

DCOMP PROGRAM RESET. The DCOMP PROG RESET pushbutton is used to restart the DCOMP program when the operator suspects a DCOMP program stall.

MADAR/ON. The MADAR/ON pushbutton is depressed to turn on electrical power to all MADAR components. Depressing the pushbutton causes the automatic portion of the MADAR system to become operative and the ON portion of the pushbutton to come on. This pushbutton, when depressed, also enables the FILM DISPLAY/ON pushbutton.

Dim Control Knob.

A DIM control knob is used to control the illumination intensity of those lights in all the pushbuttons and indicators with the exception of the lights which are controlled by the flight engineers lower panel light control.

A switch type circuit breaker for the AC power input to the CSU is located on the bottom of the CSU under the flight engineers work table. When this circuit breaker opens it causes the CKT BKR indicator on the face of the CSU to glow.

A combination fuse/indicator assembly, located just below the CKT BKR indicator on the CSU, contains a 2 amp fuse and a glow indicator which illuminates when the fuse blows.

The following is a description and the functions of the Data Retrieval Unit (DRU) controls and indicators:

Dimming Control Knob.

A DIM control knob is used to control the intensity of the DRU projection lamp.

Focus Control Knob.

A Focus control knob is used by the operator to focus the image that is displayed on the DRU screen.

Spare Lamp Control.

A SPARE LAMP control pushbutton is used to switch from the primary projector lamp to the spare lamp if the primary lamp should fail. When this pushbutton is depressed, the light in the pushbutton comes on, indicating that the number 2 lamp is selected and a message is printed out on the POU indicating a number 1 lamp failure.

A switch type circuit breaker for the AC power input to the DRU is located on the bottom of the DRU under the flight engineers work table. When this circuit breaker opens, it causes the CKT BKR indicator on the face of the DRU to glow.

DRU Centering Adjustment.

The DRU centering adjustment is located in the DRU circuit breaker well. This adjustment will allow the operator to accomplish a vertical adjustment to the film frame centering. A small dot in the upper left corner provides the operator a point of optimum alignment of the film frame. When the frame is properly aligned, the upper left corner of the frame border will be projected on the dot. To accomplish this adjustment, the operator must access a film frame, rotate the adjustment, depress the CSU PARITY ERROR pushbutton, check the new position of the film frame, and continue this procedure until the optimum alignment has been made.

Note

The adjustment will not affect the position of the film frame when it is stopped, but will affect the position when it is re-accessed.

The following is a description and the functions of the Oscilloscope and Digital Readout Unit (ODRU) controls and indicators:

A-Trace Vertical Position Adjustment Knob.

The inner A Vert knob of a dual concentric control allows the operator to vertically position the channel A trace on the oscilloscope. The trace can be made to line up with one of the scale reference lines.

B-Trace Vertical Position Adjustment Knob.

The outer B Vert knob of a dual concentric control vertically positions the channel B trace in the same manner as the A trace.

Trigger Level Sensitivity Control Knob.

The inner TRIG LEVEL knob of a dual concentric control allows the operator to vary the trigger level from the programmed trigger level.

Horizontal Trace Position Control Knob.

The outer HORIZ trace position knob of a dual concentric control horizontally positions both traces in the same manner as the vertical trace controls described previously.

Scale Illumination Control Knob.

The inner SCALE ILLUM knob of a dual concentric control allows the operator to vary the light intensity of the oscilloscope scale and the DVM display.

Astigmatisim Control Knob.

The outer ASTIG knob of a dual concentric control allows the operator to control the uniformity of the trace width across the oscilloscope.

A-Trace Gain Control Knob.

The inner A GAIN knob of a dual concentric control adjusts the gain of the oscilloscope presentation for signal calibration. Refer to the DVM gain control described below.

A/DVM Offset Control Knob.

The outer A/DVM OFFSET knob of a dual concentric control allows the operator to eliminate the offset in the MADAR. This control is used for system calibration. Instructions for calibrating the MADAR system are contained on the film pack.

B-Trace Gain Control Knob.

The inner B GAIN knob of a dual concentric control is used in the same manner as the A GAIN control described previously.

B-Offset Control Knob.

The outer B OFFSET knob of a dual concentric control is the same as that described for the A/DVM OFFSET control.

Focus Control Knob.

The inner FOCUS knob of a dual concentric control is used to adjust the oscilloscope trace focus. The FOCUS and ASTIG controls are used together to achieve the best trace presentation across the face of the oscilloscope.

Intensity Control Knob.

The outer INT knob of a dual concentric control is used to adjust the brightness of the trace.

DVM Gain Control Knob.

The DVM GAIN control is used to calibrate the DVM and compensate for MADAR system errors. When the control is used in the detent position (full counterclockwise) the DVM calibration is determined internally by the ODRU.

Power On/Off Circuit Breaker.

A POWER ON/OFF toggle switch type circuit breaker located on the face of the ODRU is provided for the AC power input to the ODRU.

BITE Pushbutton.

The BITE pushbutton is used to perform a BITE test of the oscilloscope quadrature voltage measuring circuit. When the pushbutton is depressed the first time, the AC BITE portion of the pushbutton illuminates and a standard AC signal is presented. Depressing the pushbutton the second time turns off the AC BITE light. The third time the pushbutton is depressed the CARRIER BITE light comes on and another waveform is presented which tests the quadrature measuring circuit of the ODRU. Depressing the pushbutton the fourth time turns off the CARRIER BITE light.

Display Erase Pushbutton.

The ERASE pushbutton is used to clear the oscilloscope after a waveform was display in a stored mode.

Single Sweep Pushbutton.

The SINGLE SWEEP pushbutton is used to initiate a single sweep of the oscilloscope trace when the scope is programmed by the DRU for the store mode of operation. Depressing this pushbutton causes the single trace to occur on the next trigger.

CAUTION

Beam intensity should not be turned to a high level in the store mode. To do so, may damage the scope.

AC Mode Pushbutton.

The AC MODE pushbutton is used to control the voltage readouts of the DVM. This is a momentary type pushbutton that is normally in the IN PHASE position. The QUAD light comes on and the IN PHASE light goes out when the pushbutton is depressed and held.

Calibration Pushbutton.

This pushbutton is used to check the DVM calibration. When the pushbutton is depressed the first time, the CAL A light comes on and a waveform is presented on the oscilloscope A trace and the DVM displays the numerical value of the trace amplitude. The second time the pushbutton is depressed, the CAL A light goes off and the CAL B light comes on. The waveform is then presented on the oscilloscope B trace and the DVM displays the numerical value of the B trace amplitude. Depressing the pushbutton the third time turns off the CAL B light and turns on the DVM ZERO light. The DVM should then display all zeros in the readout window. If the display is not all zeros, the DVM ZERO adjustment screw may be adjusted until the zero reading is obtained. Depressing the fourth time turns off the DVM ZERO light.

DVM Calibration Test Pushbutton.

The DVM CAL pushbutton is used in conjunction with the CAL pushbutton (either CAL A or CAL B light on). When the DVM CAL TEST pushbutton is depressed and held, the DVM should display DC - 10.00 volts. If the display is more or less than this value, the DVM CAL adjustment screw is adjusted to obtain this value.

Note

The ODRU is programmed and calibrated for normal operation with the ODRU control knobs and pushbuttons in the detent and/or normal position. Control knob detent positions are as follows: TRIG LEVEL - full clockwise; A GAIN, A/DVM OFFSET, B GAIN, B OFFSET, DVM GAIN - full counterclockwise.

The following is a description and function of the Printout Unit (POU) controls and indicators:

Fault Pushbutton.

The FAULT light in this pushbutton comes on and the POU stops operating whenever a POU power failure occurs or the paper supply is depleted. When the fault is corrected, the FAULT light can be extinguished and the POU returned to normal operation by depressing this pushbutton.

BITE Pushbutton.

Depressing this pushbutton starts the POU BITE test causing all the alpha-numerical characters to be printed on the POU paper tape.

Message Ready/Paper Advance Pushbutton.

Whenever a message is printed on the POU, the MSG READY light comes on. Depressing the pushbutton causes the paper to advance one line and the MSG READY light to go out.

Paper Remaining Indicator.

A PERCENT OF PAPER REMAINING indicator displays the percentage of paper remaining on the roll. The small toggle switch located just below the indicator is used to slew the indicator to 99 when a new roll of paper is inserted.

PRINTOUT UNIT PAPER ROLL REPLACEMENT PROCEDURE.

To install a new paper roll in the POU, accomplish the following:

1. Open the access door by turning the thumbscrews CCW.

2. Pull the hinged paper supply mechanism forward at the top.

3. Open the access plate, at the top right of the mechanism slide, to expose the tape magazine.

4. Insert the new paper roll into the magazine.

5. Thread the free end of the paper through the guides and over the face of the supply mechanism. Fold the ends of the paper to form a point to facilitate threading the paper.

6. Roll enough paper onto the take-up paddle wheel to assure take-up.

7. Swing the mechanism back into the operating position.

8. Close the access door.

9. Actuate the paper remaining reset switch. The counter should display "99".

10. Depress the FAULT pushbutton. The FAULT light should go out, and the POU should return to normal operation.

MDR COMPONENTS.

TAPE CASETTE. The supply and take-up reels of the 1/2-inch magnetic tape are secured in a cassette

for easy loading. Tape feed rollers and an erasing magnet are installed on the cassette. The erasing magnet may be turned by screwdriver to erase (clear previous data) or to allow unaltered feed of the tape. The cassette is hinged on the back end to allow easy access to the tape reels.

REEL HUBS. The 3-inch openings on the two tape reels fit over hubs on the MDR deck. A lever on each hub causes the reel to be engaged (lever down or horizontal) or released (lever up or vertical).

DUAL TAPE CAPSTAN - PRESSURE ROLLER. Two 1/8-inch capstans step the magnetic tape past the write head. A rubber pressure roller is secured by a latch against each capstan to grip and drive the tape. The latch is engaged for recording by pressing the cylinder facing the front of the MDR fully in, and flush with the latch block. The latch is released for tape removal by depressing the bar mounted above the latch block. To prevent deformation of the rubber rollers during long idle periods, an intermediate stowage position is provided. This position is acquired by pressing the latch block partially in from the front of the MDR.

IDLER ARMS. A surplus of tape at the correct tension is maintained by the supply and take-up idler arms. These spring-loaded levers, with a tape roller on each, actuate switches to turn on and off the respective hub drive motors. This action provides the proper supply and take-up of tape from reels to the tape write reservoirs.

WRITE HEAD. The tape is drawn from the supply idler arm across the write head to the capstan. In writing, the dull side of the tape must feed over the write head and capstan, and the glossy side over the pressure roller.

TAPE ADVANCE SWITCH. The INTERLOCK OVERRIDE/TAPE ADVANCE pushbutton is used to obtain the initial tape load, allowing the installer to insert the proper load point (beginning of tape) gap. Depressing the pushbutton causes the tape to advance 3/4 of an inch, with the tape head erasing any previous data that passes over it.

COVER INTERLOCK SWITCHES. Two cover interlock switches are installed to disable the moving of or writing on a tape when the cover is opened.

MDR CASSETTE INSTALLATION PROCEDURE.

On airplanes modified by T.O. 1480, a spare tape cassette is provided and stowed in the aft bunk area.

Procedures for proper installation of a cassette are listed on the MDR tape deck, along with the tape routing lines. Briefly, the procedure is as follows:

Note

Each cassette supply reel contains two labels, the tape circulation label and the MDR flight data label. Prior to installing a cassette in the MDR, the airplane serial number, the date the cassette is installed and the airframe hours at the time for installation must be annotated on the MDR flight data label.

1. Release the pressure roller assembly and set idler arms to the stowed position. Raise the hub levers to vertical.

2. With the tape installed in the cassette, place the cassette on the tape deck, with the tape itself running straight from the supply roller past the write head to the take-up roller. The glossy tape surface shall face out. Secure the cassette with the slide fasteners.

3. Rotate the take-up reel until the leading edge of the load point mark (B.O.T.), a 1-inch by 1/4-inch reflecting strip on the tape glossy side, is aligned with the B.O.T. line on the transport.

4. Press and engage the pressure rollers by pressing the engagement buttons.

5. Hold the take-up reel, release the take-up idler arm, and let the reel turn until the arm is about mid-position. Secure the take-up reel by engaging the take-up hub locking lever. In the vertical position, the tape should fit within the flanges of the idler roller. If not, go back to step 4.

Note

When engaging the hub locking lever, do not apply pressure to the tape reels. To do so will cause the reels to bind on the cassette.

6. Repeat step 5 for the supply reel and idler arm. Apply power to the unit if not already on.

7. Actuate the tape advance switch 7 to 10 times to run off the load point gap.

8. Close and latch the MDR cover. The MDR is now ready for operation.

Note

To prevent exposure to dust and elements, keep the MDR cover closed and locked when not being serviced.

MDR CASSETTE REMOVAL PROCEDURE.

To remove the cassette from the MDR, accomplish the following:

1. Release the pressure roller assembly and set the idler arms to the stowed position. Release the hub lock levers. Turn the take-up reel to take up slack in the tape.

Note

Never roll the tape back onto the supply reel. If this is done, the erase magnet will erase data and the end-of-tape mark will be mislocated.

2. Release the cassette slide fasteners and lift the cassette from the tape deck. When the cassette is removed, the airframe hours at the time of removal must be annotated on the MDR flight data label.

Note

To prevent exposure to dust and elements, keep the MDR cover closed and locked when not being serviced.

MDR CASSETTE TAPE LOADING PROCEDURE.

When a loaded spare cassette is not available and it is necessary to install a full supply reel, proceed as follows:

1. Remove the cassette from the MDR. Follow the MDR Cassette Removal Procedures contained in this section.

2. Place the cassette on a flat surface. Release the cassette halves slide fasteners. Raise the top half of the cassette.

3. If any unused tape remains on the supply reel, manually wind the unused tape from the supply reel onto the takeup reel. Use the round identation on top of the takeup reel to rotate the reel.

Note

Do not roll the tape back onto the supply reel.

4. Remove the full takeup reel from the cassette and place it in the spare reel storage space.

5. Move the empty reel to the takeup reel position. Annotate the empty supply reel (date and airframe hours that the tape was used from this reel).

6. Place a new supply reel in the cassette so that the tape is coming off the reel in a clockwise direction with the glossy side of the tape facing outward. Thread the tape following the guidelines on the bottom half of the cassette. Annotate the new supply reel MDR Flight data label with the airframe hours at time of installation. The date the tape was placed on the airplane and the airplane serial number should already be annotated on the label.

7. Close the cassette halves and lock the slide fasteners. Reinstall the cassette in the MDR using the MDR cassette installation procedure contained in this section.

MADAR SYSTEM OPERATING MODES.

In order to properly record formated data at the CDPIR and MDR, several MADAR system operating modes are provided. These modes are identified as follows:

Standby Mode.

In this mode, the DCOMP is essentially inactive and processes messages only from the operator, including mode change messages. This mode is intended to be used by technicians during detailed ground checkouts where continuous SAR-A or SAR-M test point data to the ODRU is desired. No output data is made to the CDPIR or MDR, and no LRU failure or recovery messages, or test point data are transmitted to the POU. The MADAR subsystem PRINT light is on in this mode and other subsystem PRINT lights have no meaning. The MADAR system automatically changes to OPERATE mode if the airplane takes off with the MADAR in STANDBY. The MADAR system is set to the STANDBY mode, by the operator, before shutdown.

Test Mode.

All normal automatic and manual MADAR system operations, except the recording of data on the MDR, can be performed in this mode. This mode allows a maintenance ground check-out of both the MADAR system and all other monitored systems without recording LRU failure or recovery reports on the MDR that may be the result of ground checkout procedures. This mode is convenient for loading new MDR tapes without writing extraneous data and for preflight test and checkouts. The MADAR system automatically reverts to the OPERATE mode if the airplane takes off with the MADAR in the TEST mode.

Operate Mode.

This is the normal mode for automatic and manual MADAR operation. All automatic system functions are accomplished with minimum operator participation and all manual MADAR routines can be performed by the operator when in this mode.

MADAR SUBSYSTEM MANUAL BITE.

The Bite circuitry and controlling film frames provided in the manual MADAR subsystem allow a convenient and speedy process for checking the proper operation of the CSU, DRU, and MMUX. Instructions for performing the manual MADAR system Bite test are contained in the film pack. The BITE test is initiated by accessing the MADAR subsystem index frame on the DRU and following the instructions for the manual LRU isolation routine.

MADAR SUBSYSTEM START-UP PROCEDURE.

To start-up the MADAR subsystem accomplish the following:

1. MADAR Circuit Breakers - CLOSED

Check that all circuit breakers for the MADAR system are closed. MADAR circuit breakers are located on the following buses: Fwd Main AC buses 2, 3 and 4; Aft Main AC buses 1, 2, 3 and 4; 26 VAC Nav bus 2. In addition, the CMA DCOMP and ODRU have switch-type circuit breakers located on their respective front panels. The CSU and DRU have their circuit breakers located on their lower sides. Access to these breakers is through holes in sloping panel above the flight engineer's knees.

CAUTION

Failure to close the DRU circuit breaker on the navigators No. 2 circuit breaker panel may damage the DRU film.

2. MDR Tape Supply - CHECKED/PRESSURE ROLLERS ENGAGED

Open the lid of the MDR and check the amount of tape remaining. A full reel contains 2400 feet. Graduations in feet of tape remaining are usually marked on the reel. The MDR uses an average of 80 feet of tape per operating hour. If cassette replacement is required accomplish the MDR Cassette Removal and Installation Procedures given in this section, on the DRU or on the MDR. When checking the MDR, do not press down on the magnetic tape supply to take-up reels. To do so may cause the reels to bind on the bottom of the cassette.

3. POU PAPER SUPPLY - CHECKED

When required, install a new roll of paper by using the Printout Unit Paper Roll Replacement Procedure in this section or on the DRU.

4. MADAR Pushbutton - DEPRESSED

This action applies power to all MADAR subsystem components except the DRU and ODRU. The automatic system starts operating immediately in the same mode that it was in during shutdown. If the proper or normal shutdown procedures were used, the MADAR system starts up in the standby mode. If the POU FAULT light is lit, clear the fault by depressing the fault pushbutton. The first line of the first message that will be printed on the POU is POWER ON. The second line is MADAR followed by a six digit number which is the flight program identification number. The third line is the header data. The header data printout should read as follows:

XXXX	XXXXX	XX/XX/XX	XXXX
(Time)	(A/C No.)	(Date)	(Mode)

5. Film DISPLAY Pushbutton - DEPRESS

Depressing this pushbutton activates the DRU. The DRU display screen illuminates and displays a random film frame.

6. Keyset CLR Pushbutton - DEPRESSED

Depress the Keyset CLR pushbutton to clear the power interrupt signals (amber glow) on the two left keyset display windows.

7. MADAR Subsystem Status/Select Pushbutton - DEPRESSED

Depressing this pushbutton accesses and displays the MADAR Subsystem Index frame on the DRU. The index frame contains instructions for updating the MDR header. If the DRU is inoperative, proceed as follows:

MADAR DCOMP UPDATE PROCEDURES.

1. Standby Mode - CHECKED

If the POU message on start-up indicates other than the standby mode, enter CMA message 1000001 and depress the EX pushbutton.

2. MDR Header Data - PRINTED AND CHECKED (CMA Message 1000022 and EX).

It is important that the MDR header is properly updated to insure accurate data reduction. If the POU is inoperative, each of the following items shall be updated by use of the appropriate CMA messages. In this case (POU inoperative), each update entry must be checked visually on the keyset display windows prior to depressing the EXECUTE pushbutton since no other means of verifying header data is available to the operator. The MDR header data should also be printed and checked for validity anytime the MADARS power supply is unintentionally interrupted.

a. Zulu Time - ENTERED

Enter zulu time by using CMA message 6HHMMOO and depress the EX pushbutton. HH = Hour; MM = Minutes; OO = Seconds. Update the time only during MADAR start-up prior to flight.

b. Airplane Serial Number - CHECKED

Check the airplane number printed out on the POU against the airplane number shown in AFTO Form 781J. If it is incorrect, enter CMA message 11XXXXX, where XXXXX is the airplane serial number, and depress the EX pushbutton. Example: Airplane serial number is 67167. Enter 1167167 and depress the EX pushbutton.

c. Calendar Date - CHECKED

Check the Zulu calendar date printed out on the POU against the current date. If it is incorrect, enter CMA message 5DDMM7Y and depress the EX pushbutton. DD = Day; MM = Month; and 7Y = Year.

Update only during MADAR start-up prior to flight. Do not update until beginning the next flight, even if the present flight extends into the following day. Example: The date is 22 January 1970. Enter 5220170 and depress the EX pushbutton.

Note

The date will automatically be updated when the CMA real time clock passes the 2400 hour mark.

d. Airframe Hours - CHECKED

Check airframe hours printed out on the POU against the current airframe hours. If incorrect, enter CMA message 120XXXX, where XXXX are the airframe hours, and depress the EX pushbutton. Example: Airframe hours are 1242.9. Enter 1201243 and depress the EX pushbutton.

e. Engine Serial Numbers - CHECKED

Check the engine serial numbers printed out on the POU for each engine against the engine serial numbers shown on AFTO Form 781J. If it is incorrect, enter CMA message 13NXXXX and depress the EX pushbutton. N = Engine Position. Use the last four digits of the serial number. Example: Serial Number on No. 2 engine is 441802. Enter 1321802 and depress the EX pushbutton.

f. Engine Hours - CHECKED

Check the engine hours printed out on the POU for each engine. If incorrect, enter CMA message 14NXXXX, where N is engine position and XXXX are engine hours, and depress the EX pushbutton.

g. MADAR I.D. Number - CHECKED

Check the MADAR I.D. number printed out on the POU against the I.D. number shown on film frame 00002 (FRAME ADDRESS 00002 and EX). If incorrect, enter CMA message 18XXXXX and depress the EX pushbutton. Example: MADAR I.D. number is 1301. Enter 1801301 and depress the EX pushbutton.

h. MDR Header Data - PRINTED AND CHECKED

Enter CMA message 1000022 and depress the EX pushbutton.

Check that the updated MDR header data is correct.

3. Zero Flight Report Data - Entered (Home Station Only)

Enter CMA message 1000011 and depress the EX pushbutton.

Note

This action, in addition to zeroing the flight report register, will also zero the manual fail LRU table and the suppressed LRU table. Therefore, the flight report should be zeroed only when departing the home station. If it becomes necessary to exercise the Zero Flight Report routine at enroute stations, those manual LRU failures and suppressed LRUs entered on previous flights and not corrected will have to be re-entered.

4. Test Mode - ENTERED

Enter CMA message 1000002 and depress the EX pushbutton.

5. Failure Reports - Resolved

Resolve all failure reports which may be due to disconnected LRU's, open circuit breakers, an abnormal operating mode, or an actual failure detected by the automatic system.

6. Standby Mode - ENTERED

Enter CMA message 1000001 and depress the EX pushbutton. Upon completion of the MADAR System Start-Up Procedure, the DRU may be turned off by depressing the FILM DISPLAY/ON pushbutton. This action will not affect automatic system operation.

Note

MADAR should remain in the standby mode while other systems are being pre-flighted to prevent the MDR from recording erroneous data. MADAR will be placed in the operate mode just prior to engine start.

MADAR SUBSYSTEM OPERATION.

The MADAR subsystem has three modes of operation: automatic, manual and automatic/manual. The automatic mode is described as MADAR's capability to automatically sample voltages from an airplane LRU and to evaluate the LRU based on pre-programmed test point limits. The operator is then notified of an LRU failure or recovery by a message to the POU. Another feature of the automatic mode is that various critical flight parameters and airplane subsystem parameters are monitored and the data recorded by the MDR. This data will be reduced by ground processing in order to establish the associated parameter trend. The automatic mode can be placed in a test sub-mode which is used during maintenance operation (the only difference between the test and operate modes is that while in the test mode the MDR is not operational).

The manual mode allows the operator to perform LRU isolations using information on the film pack. The operator will use this mode when a malfunction occurs and the automatic part has no message report (printout). Some LRUs and systems are monitored only by the manual part of MADAR, for example, ramps and doors.

The automatic/manual mode is described as the capability of MADAR to detect an abnormal airplane condition but needing the operator to isolate the faulty LRU. This condition is made known to the operator by a POU message which consists of a message number followed by the words "MAN ROUTINE." To isolate this problem, the operator will access the film frame containing the message I.D. number printed out and will then follow film pack instructions for LRU isolation.

Acknowledging Failure Reports.

When a failure is detected by the automatic system or set into the computer by the operator utilizing the manual system, a failure report (FXXXXX) is printed on the POU, and the appropriate system status PRINT light comes on. The PRINT light stays on until the failure is acknowledged.

To acknowledge a failure, accomplish the following:

Note

When following MADAR film logic instructions, if an operation or procedure is indicated which affects airplane system operation, notify the pilot prior to the action.

1. If the DRU is not on, depress the FILM/DISPLAY/ON pushbutton.

2. Depress the FRAME ADDRESS pushbuttuon.

3. Enter the first three digits of failed LRU number and depress the EX pushbutton.

4. Using the LRU listing displayed, select the frame address corresponding to the LRU in question.

5. The last frame in the routine will identify the failed LRU and direct a choice select that, when executed by the operator, will acknowledge the failure.

6. The system status PRINT light goes off within one second of the acknowledgement, and an acknowledgement message is printed out on the POU (AXXXXX).

Diagnosing LRU Failures.

A need for a manual diagnostic routine may be indicated by an automatic system message, the flight engineers basic instruments, or a request from another crew member. Details for diagnosing suspected or indicated failures are contained on the film frames. The diagnosing procedure is accomplished as follows:

1. Access the appropriate subsystem index film frame by depressing one of the subsystem status indicator pushbuttons.

2. Use the CHOICE select mode to access appropriate test frames for the particular LRU or system to be diagnosed. The film frames are programmed to automatically call up specific test points to provide measurements and to set up the ODRU to display the measurements. The operator compares the measured values that are displayed on the ODRU with the values which are shown on the film frame. The film data may direct the acquisition of new test points by depressing the MAN TEST PT or CMA MESSAGE mode pushbuttons or going to a new frame by depressing the FRAME ADDRESS pushbutton.

3. If an LRU failure is detected by the operator, using the ODRU values compared to the values shown on the film frame, a failure message should be transmitted to the DCOMP. This is normally accomplished by making a choice selection as directed by the film frame. At times, the film data may call for the failure message to be transmitted to the DCOMP by the operator, using the CMA MESSAGE mode. In either case, when a manually detected failure is set into the DCOMP by the operator, the result will be the illumination of the system status PRINT light and a LRU failure message printed out on the POU. This failure message would now have to be acknowledged by the operator to turn off the PRINT light.

4. If it is necessary to acknowledge an automatically detected failure during a manual diagnostic routine, the manual routine in progress may be temporarily stopped by depressing the HOLD pushbutton. After acknowledging the automatically detected failure, the operator may continue the manual routine by again depressing the HOLD pushbutton.

Note

When using the DRU for accomplishing any of the previously described routines, if a DRU overtemperature is indicated by a MADAR subsystem PRINT light and a POU printout which reads "DRU FILM OVER-TEMP," the DRU should be turned off for approximately 5 minutes to allow the DRU to cool down.

MADAR PRE-LANDING PROCEDURE.

The pre-landing procedure must be accomplished approximately 30 minutes prior to landing at bases where other than operational stops (engines running) are planned. A film frame outlining the MADAR pre-landing procedure is provided in the DRU. If the DRU is inoperative, proceed as follows:

1. Flight Report - PRINTED

Enter CMA message 1000021 and depress the EX pushbutton.

2. AFTO Form 781A Entries - AS REQUIRED

Entries, containing supporting documentation of failed LRUs, should be made in the 781A in order to expedite ground maintenance activities.

MADAR ENGINE VIBRATION ANALYSIS.

On 68306, 70169, 00447 and up and airplanes modified by T.O. 1450, the compressor rear frame (CRF) and the turbine rear frame (TRF) vibration pickups, which are monitored by the MADAR, can be displayed on the ODRU as traces of engine vibration. The use of the ODRU display and the procedures that follow can be used to determine engine vibration levels.

These procedures provide the capability for determining (1) if the traces displayed on the ODRU are valid data or malfunctioning signals, (2) if the whole engine is within the vibration limit, and (3) if the fan (N_1) or the core (N_2) is causing the engine to vibrate out of limits. In these procedures, the term "whole engine" is used in discussing the total vibration of all engine components. The determination of instrumentation validity may be accomplished during preflight. The vibration level check of the whole engine (quick check) will be accomplished during cruise. The fan or core vibration isolation procedures (resonant checks) are only accomplished when the whole engine vibration exceeds the specified limit. During any vibration analysis or validity checks, if ODRU traces do not look similar to the views referenced in the procedural steps, refer to the malfunction views, identify the malfunction if possible, and make an entry in the Form 781.

The ODRU waveform is a combined trace of fan and core vibration signals. In cruise, the core is normally dominant with 12 to 15 peak tops on the trace (view 1, figure 1-119A). When the fan amplitude becomes more dominant, 3 to 5 peak tops become distinctive (view 2 and 3, figure 1-119A).

Multiple distinct ODRU traces can be put on the scope by adjusting the A-Vert knob between traces (view 1 and 3, figure 1-119B).

Note

It may be necessary to alternately depress the ERASE and SINGLE SWEEP pushbuttons to obtain a full trace.

Preflight.

The engine vibration pickups and the associated electrical circuitry may be checked with the engine not running, to determine that short circuits do not exist.

Note

If the MADAR is not in the standby mode, the traces may be interrupted by the DCOMP when it is servicing the CDPIR and trend data coincidentally. When this occurs, the traces on the ODRU will be interrupted or appear dashed for a portion or all of the trace.

To accomplish this check, proceed as follows:

1. Film Frame 4994 - ACCESSED
2. ODRU A-Gain - FULLY CCW DETENT
3. CMA Message 810SS08 - ENTERED

Note

In the CMA message, SS denotes the engine being checked: 19=No. 1, 20=No. 2, 21=No. 3 and 22=No. 4.

4. Single Sweep Pushbutton - DEPRESSED

The trace on the ODRU scope should be a zero volt (straight line) trace.

5. Erase Pushbutton - DEPRESSED
6. Repeat steps 2 through 5 for CMA message 810SS09.
7. Repeat steps 2 through 6 for the remaining engines.

Note

The above check does not detect open circuits. An open circuit will produce a straight line trace when the engine is running. Engine operation may also reveal intermittant short and open circuits.

Quick Check.

To accomplish a quick check, proceed as follows:

1. Film Frame 4995 - ACCESSED
2. ODRU A-Gain - FULLY CCW DETENT
3. CMA Message 810SS08 - ENTERED
4. Single Sweep Pushbutton - DEPRESSED

Check the maximum peak-to-peak amplitude for vibration of the whole engine. If the waveform looks similar to view 1 or 2 of figure 1-119A and does not exceed 2-1/2 scope divisions, the vibration level of the whole engine is within limits. If the waveform looks similar to view 1 or 2 of figure 1-119A and exceeds 2-1/2 scope divisions, perform the Resonant Checks. If the waveform does not look similar to view 1, 2 or 3 of figure 1-119A, repeat steps 2 and 3 for CMA message 810SS09.

Resonant Checks.

To accomplish resonant checks, proceed as follows:

1. Film Frame 4994 - ACCESSED
2. ODRU A-Gain - FULLY CCW DETENT
3. CMA Message 810SS08 - ENTERED
4. A-Vert Knob - ROTATED 90 DEGREES CW FROM STOP
5. 80 Percent N_2 - SET

CAUTION

Do not maintain 80 percent N_2 RPM for longer than necessary. Failure to comply may result in damage to the engine and airplane.

6. Single Sweep Pushbutton - DEPRESSED
7. A-Vert Knob - ROTATE 90 DEGREES CW
8. Single Sweep Pushbutton - DEPRESSED

Depress the Single Sweep pushbutton enough times to develop a whole engine vibration band (view 3, figure 1-119B).

9. Power - RESET

Notify the pilot to reset power.

10. Top Trace - CHECKED

Compare the top (core) trace with views 1 and 2 of figure 1-119B.

If the trace is abnormal (more than 2 scope divisions but less than 5), continue engine operation avoiding the 80 percent N_2 range. Transition through the 80 percent N_2 range is permissable. If the trace is 5 scope divisions or more, accomplish a precautionary engine shutdown.

If the trace is normal (2 scope divisions or less), subtract the peak-to-peak amplitude of the top trace from the band width of the bottom trace. If this difference is more than 1 scope division at 80 percent N_2, accomplish the fan resonant check that follows:

a. Film Frame 4995 - ACCESSED

b. ODRU A-Gain - FULLY CCW DETENT

c. CMA Message - RE-ENTERED

Re-enter the CMA message for the engine being checked.

d. 80 Percent N_1 - SET

e. Single Sweep Pushbutton - DEPRESSED

f. Trace Peaks - CHECKED

Check the trace for 3 to 5 distinctive peaks.

Three to five peaks indicate fan dominant vibration (view 2 or 3, figure 1-119A). Record the maximum peak-to-peak amplitude for the 3 to 5-peak trace.

g. Film Frame 4994 - ACCESSED

h. CMA Message - RE-ENTERED

Re-enter the CMA message for the engine being checked.

i. Single Sweep Pushbutton - DEPRESSED

j. Trace Amplitude - RECORDED

Record the peak-to-peak amplitude of the trace.

k. Subtract the recorded value of step j from the recorded value of step f.

This difference is fan vibration. If the fan vibration level is between 1 and 2 scope divisions at 80 percent N_1, avoid continuous operation at 80 percent N_1.

If the fan vibration is more than 2 scope divisions, accomplish a precautionary engine shutdown.

Note

If the trace does not have 3 to 5 peaks, this check cannot be accomplished. Attempt to identify the trace with a malfunction trace found in figure 1-119C and make an entry in Form 781.

MADAR SUBSYSTEM SHUTDOWN PROCEDURE.

The following shutdown procedure must be followed after landing and only when the flight is to be terminated by shutting down the airplane engines. This procedure must be followed so that the MDR will contain all records from engine start through engine shutdown. In addition, the POU data will contain all information required by the ground crew to expedite maintenance activities. A film frame outlining the MADAR shutdown procedure is provided in the DRU. It is accessed from the MADAR index frame. If the DRU is inoperative, proceed as follows:

1. Operate Mode - CHECKED

Check the POU header for the OPER mode. If not in operate mode, enter CMA message 1000003 and depress the EX pushbutton.

2. Flight Report - PRINTED

3. Standby Mode - SELECTED

Enter CMA message 1000001 and depress the EX pushbutton. The MADAR can now be turned off as follows:

1. FILM DISPLAY Pushbutton - DEPRESSED

This action turns off the DRU film display.

2. MADAR Pushbutton - DEPRESSED

This action removes power from the MADAR system.

3. MDR Pressure Rollers - RELEASED, IF REQUIRED

If the MADAR is to be shut down for more than 12 hours, disengage the pressure rollers.

INTEGRAL WEIGHT AND BALANCE SYSTEM (IWBS).

The IWBS (Integral Weight and Balance System) provides the loadmaster with a direct measurement of the airplane gross weight in pounds and airplane center of gravity in percent MAC (mean aerodynamic chord). The system also has the capability to predict airplane take-off gross weight and center of gravity effects of a single unit of cargo prior to its loading or unloading to assist cargo load planning.

The weighing system consists of weight sensing transducers permanently installed on each landing gear and an electronic analog computer unit mounted on the side wall structure aft of the left troop door. The computer provides power to the transducers, receives signals from the transducers, combines the signals to compute gross weight and center-of-gravity and displays the information in digital form on the face of the computer. The computer contains an electrolytic inclinometer to permit automatic compensation for cargo compartment floor inclination during CG computations. Six transducers, located on each main landing gear, provide electrical signals to the IWBS computer in all kneeling modes. Two sets of nose gear transducers are located so that one set detects the vertical load for unkneel and aft kneeling position and the other set detects the load for level and full kneeling positions. All transducers on a given landing gear are electrically summed and the total output signal routed to the IWBS computer. Gross weight is equal to the sum of forces acting on the landing gear.

On 90012 and up and airplanes modified by T.O. 840, the stabilizer struts have been removed.

The IWBS receives 115-volt AC power from the No. 3 aft main bus (figure 1-70).

IWBS CONTROLS.

Controls and indicators are found on the WEIGHT AND BALANCE COMPUTER panel (figure 1-120). A set of calibration potentiometers are located under the hinged CALIBRATION ADJUSTMENT subpanel at the lower right corner of the computer panel. The potentiometers compensate for landing gear modules variations and for offsets. Adjustments are not required during normal operation. The IWBS controls and indicators are described below:

Weigh Pushbutton.

A WEIGH pushbutton is momentarily depressed to weigh the airplane and display the airplane weight and CG. Refer to the IWBS Preflight Test and Weighing Procedures in this section.

Test Pushbutton.

A TEST pushbutton is momentarily depressed to test all IWBS indicator lights and to self-test the IWBS computer. Refer to the IWBS Preflight Test and Weighing Procedures in this section.

Kneeling Mode Selector Switch.

The KNEELING MODE switch is used to select a predetermined correction factor which compensates for the weight and CG shifts that occur when the airplane is kneeled. When the KNEELING MODE switch is rotated to any of its positions, it selects the appropriate set of nose gear transducers to be used in computing airplane weight and CG.

On 00454, 00458 and up and airplanes modified by T.O. 1554, the KNEELING MODE switch has "UKN/AFT," "LVL" and "FWD" positions.

On 68304, 68306, 68307, 70167, 70168, 70170 through 00453, and 00455 through 00457 not modified by T.O. 1554, the KNEELING MODE switch has "UKN," AFT," LVL" and "FULL" positions. The aft kneel transducers on the NLG are not used. Use "UKN" in lieu of the "AFT" position when the airplane is aft kneeled. The "FULL" position is used when the airplane is forward kneeled.

Ramp Position Selector Switches.

The RAMP FWD and the RAMP AFT toggle switches are used to select a predetermined correction factors which compensate for the weight and CG shifts that occur when the ramps are lowered to either of the loading positions. Placing either of these switches to any position selects the appropriate weight and CG shift correction factors used in computing airplane weight and CG. While the airplane is in any of its loading configurations, the RAMP position selector switches are used in conjunction with the KNEEL MODE selector switch to obtain the gross weight and CG for the take-off configuration.

Note

When the KNEELING MODE selector switch is in the "UKN" position, there are no weight or CG corrections entered in the computer for the ramp positions.

Weight Change Selector Switch and Indicators.

The WEIGHT CHANGE selector switch is used during loading or unloading operations to provide incremental weight change readings. Moving the lever to "LOAD" shutters the LOAD weight change readout window and sets up the computer to accept a weight change signal.

Weight Change Reset Pushbuttons.

Two WEIGHT CHANGE RESET pushbuttons are used to reset the WEIGHT CHANGE readout windows. Depressing either pushbutton resets the readout window to zero. Refer to the Weight Change Procedures paragraph in this section. An incremental loading weight change is read by depressing the upper WEIGHT CHANGE RESET pushbutton to set the LOAD readout window to zero and then depressing the WEIGHT pushbutton. Moving the lever to "UNLOAD" shutters the LOAD weight change readout window and unshutters the UNLOAD weight change readout window. An incremental unloading weight change is read by depressing the lower WEIGHT CHANGE RESET pushbutton for the UNLOAD readout window and then depressing the WEIGH pushbutton. Refer to the Weight Change Procedures paragraph in this section.

CAUTION

Use of the WEIGHT CHANGE RESET pushbuttons when the indicators are driven will cause mechanical damage to the indicator gear train.

Supplemental Cargo Weight Selector Switch.

The SUPPLEMENTAL CARGO WEIGHT selector switch is used with the FUS STA switch and two LOAD and UNLOAD pushbuttons. The switch has positions for setting in a simulated supplemental loading or unloading weight from zero to 350,000 pounds. It is used to determine the effect of an anticipated loading or unloading of cargo on the gross weight and CG of the airplane. The WEIGHT CHANGE indicators will present the detail value of the selected supplemental cargo weight if reset prior to pressing the load or unload pushbutton. The SUPPLEMENTAL CARGO WEIGHT selector may be adjusted to any desired value by reading the WEIGHT CHANGE indicator.

Supplemental Cargo Fuselage Station Selector Switch.

The SUPPLEMENTAL CARGO FUS STA selector switch is used with the WEIGH switch and two LOAD and UNLOAD pushbuttons. The switch has positions for setting in simulated fuselage stations from 400 to 2,100 inches. It is used to determine the effect of anticipated cargo of different weights positioned at the various fuselage stations on the gross weight and C.G. of the airplane. Refer to the Supplemental Cargo Loading or Unloading Procedures paragraph in this section.

Supplemental Cargo Loading Pushbutton.

Two SUPPLEMENTAL CARGO LOAD and UNLOAD pushbuttons are used with the WEIGH and FUS STA switches to simulate supplemental loading or unloading conditions. Depressing the LOAD or UNLOAD pushbutton, with the other two switches preset to the desired simulated conditions, provides a supplemental cargo weight change readout on the WEIGHT CHANGE readout windows and the predicted take-off gross weight and CG. Refer to the Supplemental Cargo Loading or Unloading Procedures paragraph in this section.

Circuit Selector Switch.

The CIRCUIT selector switch is used for checking the computer, weight sensors, zero potentiometers and sensitivity potentiometer circuits. Only the "COMPT" and "SENSOR" positions of the switch are used for the preflight test. The other three positions are used during maintenance calibration of the IWBS. Refer to the IWBS Preflight Test and Weighing Procedures paragraph in this section.

Sensor Selector Switch.

The SENSOR selector switch is used to determine the load on each landing gear. The left and right strut positions of the switch are used during maintenance to determine the null point (zero drift) of the gross weight servo. The switch may be used in flight with the gear down to verify that no transducer zero shift has occurred.

On 00454, 00458 and up, and airplanes modified by T.O. 1554, the positions of the SENSOR selector switch are "L-STRUT;" "AFT" and "FWD" for the L-MAIN; "UKN," "LVL" and "FWD" for the Nose; "FWD" and "AFT" for the R-MAIN; and "R-STRUT."

On 68304, 68306, 68307, 70167, 70168, 70170 through 00453 and 00455 through 00457 not modified by T.O. 1554, the positions of the SENSOR selector switch are "L-STRUT;" "AFT" and "FWD" for the L-MAIN; "UKN," "AFT," "LVL" and "FULL" for the nose; "FWD" and "AFT" for the R-MAIN; and "R-STRUT."

On 90014 and up and airplanes modified by T.O. 917, the nose gear aft kneel transducers have been removed and the "AFT" position of the switch is disconnected.

Check Pushbutton.

A CHECK pushbutton is used to check out the circuits and sensors described under the Circuit Selector Switch and the Sensor Selector Switch paragraphs above. The CHECK pushbutton is depressed after each successive selection of the CIRCUIT or SENSOR selector switch is made and the results checked in the GROSS WEIGHT readout window. Refer to the IWBS Preflight Test and Weighing Procedures in this section.

IWBS PREFLIGHT TEST AND WEIGHING PROCEDURES.

The IWBS preflight test is accomplished by using the weight and balance computer self-test capabilities without any external equipment. In the event the computer should fail at any time during the test, the test stops and maintenance must be accomplished. Electrical power should be on 15 minutes or longer prior to preflight tests. The following procedures are used to accomplish the test:

1. Press the TEST pushbutton and observe that the READ and DO NOT READ lights come on.

2. Release the TEST pushbutton.

The DO NOT READ light will remain on and the READ light will go off until the system nulls out. At this time, the DO NOT READ light goes off and the READ light comes on. The gross weight shall read between 322,000 and 328,000 pounds or 247,000 and 253,000 pounds and the CG shall read between 24.7 and 25.3 percent.

Note

The computer servos remain active for approximately 45 seconds after any pushbutton is released.

Note

The test gross weight readout value is dependent on the signal level of the transducers as installed on a specific landing gear and the associated sensitivity potentiometer setting. Airplanes that could not be adjusted to 250,000 (±3,000) pounds test gross weight value are adjusted to 325,000 (±3,000) pounds. Either test value is satisfactory.

Note

Walkie-talkie transmission in close proximity (approximately 10 feet) to the IWBS computer can cause fluctuations in IWBS readouts. Do not read while transmissions are in progress.

3. Rotate the circuit selector to COMPT.

4. Press the check pushbutton and observe the following:

a. After the READ light comes on and the counters approaching the null position, the gross weight shall read between 247,000 and 253,000 pounds and the CG shall read between 24.7 and 25.3 percent.

Note

The servo-driven counters drift very slowly when within 1,000 pounds and 0.1 percent of null. Approximately 30 seconds are required for stability.

5. Rotate the KNEELING MODE selector switch to the position corresponding to the airplane's kneeling configuration. Use "UKN" for the "AFT" position.

6. Place the RAMP position selector switches to the corresponding position of the forward and aft ramps.

Note

When the KNEELING MODE selector is in the "UKN" position, there are no weight or CG corrections entered in the computer for the ramp positions.

7. Depress the WEIGH pushbutton.

When the READ light comes on, record the gross weight and CG readings.

On 00454, 00458 and up, and airplanes modified by T.O. 1554, the IWBS limits with manual corrections are within ±7,500 pounds of actual gross weight and ±1.25 percent MAC of actual C.G.

Note

When engines are operating, an IWBS error of between 5,000 and 15,000 pounds will occur and is normal. The system will be accurate when the engines are not operating.

Note

For unkneel or aft kneel, if the NLG has been turned when the airplane is static by using either nose gear steering or a tow bar, a large error in CG can occur. To clear the error, the nose gear wheels must rotate one turn or be rotated by kneeling the airplane.

a. Aft Kneel - Subtract 15,000 pounds from the indicated gross weight.

(1) Aft Ramp at Drive-In - Subtract 15,000 pounds from the indicated gross weight and add 1.0 percent MAC to the indicated gross weight.

b. Forward Kneel - Add 7,500 pounds to the indicated gross weight.

(1) Forward Ramp at Drive-In - Add 7,5000 pounds to the indicated gross weight and subtract 1.0 percent MAC from the indicatedC G.

On 68304, 68306, 68307, 70167, 70168, 70170 through 00453, and 00445 through 00457 not modified by T.O. 1554, the readings, depending upon the airplane kneeling configuration, should be within one of the following limits:

Note

When engines are operating, an IWBS error of between 5,000 and 15,000 pounds will occur and is normal. The system will be accurate when the engines are not operating.

a. Unkneel - The gross weight reading shall be within ±7,500 pounds of the actual weight and the CG within ±1.25 of actual percent of MAC.

Note

If the NLG is turned when the airplane is static by using either nose gear steering or a tow bar, a large error in CG can occur. To clear the error, the nose gear wheels must rotate one turn or be rotated by kneeling the airplane.

b. Aft Kneel - The gross weight reading shall be within +22,500 to -7,500 pounds of the actual weight and the CG within +3.00 to -1.25 of actual percent of MAC.

Note

If the NLG is turned when the airplane is static by using either nose gear steering or a tow bar, a large error in CG can occur. To clear the error, the nose gear wheels must rotate one turn or be rotated by kneeling the airplane.

Note

Use the UKN position of the KNEELING MODE selector for aft kneeling of the airplane. Door and ramp positions other than stowed are uncompensated and additional errors will occur.

c. Level Kneel - The gross weight reading shall be within ±10,000 pounds of the actual weight and the CG within ±1.5 of actual percent of MAC.

d. Forward Kneel - The gross weight reading shall be within +7,500 to -15,000 pounds of the actual weight and the CG within +3.00 to -1.25 of actual percent of MAC.

INTEGRAL WEIGHT AND BALANCE SYSTEM (IWBS) OPERATION.

The IWBS is not a service proven system and therefore must be used as only an aid to the loadmaster to cross-check the weight of pre-weighed cargo and the normal calculations of airplane gross weight and CG.

Weight Change Procedure.

This procedure is used to verify individual pallet or unit weights or to check the gross weight sub-total as the airplane is being loaded or unloaded. This procedure (incremental weight or differential weight) is the most accurate usage of the IWBS because the major portion of the weighting error appears in the airplane reference or baseline weight indication. Only a small percentage of error appears in the cargo weight change indication.

Note

In the event the airplane location is moved or the airplane kneeling position is changed during cargo loading or unloading, a new value of airplane reference weight value must be used for subsequent weight change readings.

Accomplish the Airplane Preflight Test and Weighing Procedure before the loading or unloading operation and then accomplish the following:

1. Move the WEIGHT CHANGE selector switch to the desired position ("LOAD" or "UNLOAD").

2. Depress the selected WEIGHT CHANGE RESET pushbutton. The WEIGHT CHANGE indicator shall read zero.

CAUTION

The use of the WEIGHT CHANGE RESET pushbuttons when the indicator counters are driving, will cause mechanical damage to the gear-train.

3. Load or unload cargo as desired.

4. Press the WEIGH pushbutton. Record the weight change indicator reading as the cargo weight after the indicators have stopped moving.

5. Repeat steps 1 through 4 to establish the weight for each unit of cargo.

Supplemental Cargo Loading and Unloading Procedure.

This procedure is used to predict gross weight and CG by simulating the loading or unloading of cargo or fuel at a given fuselage station. Supplemental cargo weight readings may be initiated whenever desired, however, the IWBS computer has no memory capability and cannot predict the cargo weight and location effects on the airplane for more than one unit of cargo. The total weight of the cargo and the average fuselage station location of all cargo must be used in order for the computer to predict the accumulative effects. Before starting the supplemental cargo loading procedure, weigh the airplane in accordance with the Airplane Preflight and Weighing Procedure, then accomplish the following:

1. Rotate the SUPPLEMENTAL CARGO WEIGHT selector to the value of cargo weight.

2. Rotate the SUPPLEMENTAL CARGO FUS STA selector to the fuselage station where the cargo is or is to be located.

3. Move the WEIGHT CHANGE selector to the desired position ("LOAD" or "UNLOAD").

4. Depress the selected WEIGHT CHANGE RESET pushbutton. The weight change indicator shall read zero.

CAUTION

The use of the WEIGHT CHANGE RESET pushbuttons when the indicator counters are driving will cause mechanical damage to the gear-train.

5. Press the selected LOAD or UNLOAD pushbutton. When the weight change indicator approaches the null, re-adjust the SUPPLEMENTAL CARGO WEIGHT selector so that the weight change reading is the same as the selected supplemental weight of the cargo.

6. The predicted airplane gross weight and center-of-gravity will result from the cargo change as presented by the gross weight and CG indicators.

CARGO DOOR AND RAMP SYSTEMS.

The forward and aft cargo door ramp systems are used for ground loading and unloading. The aft cargo door and ramp system can also be used as the exit during aerial delivery of cargo.

The forward system consists of a retractable visor that becomes the forward pressure vessel structure when closed a forward ramp, ramp extension, and toes. The aft system consists of a ramp, a pressure door that is also used as the ramp extension with ground toes, side cargo doors and a center cargo door.

The visor and forward ramps are operated by hydraulic pressure from the No. 4 hydraulic system. The aft cargo door and ramps are operated by hydraulic pressure from the No. 1 hydraulic system. The systems are armed from the CARGO DOORS panel on the copilot's side console (figure 1-121) and controlled on the ground from the loadmaster's forward and aft control panels (figure 1-122). In flight, the aft doors and ramp system is armed by the CARGO DOORS panel on the copilot's side console (figure 1-121) and controlled by the loadmaster's aft control panel and the loadmaster's forward ADS panel.

The forward system receives 28-volt DC power from the main DC bus No. 1 (figure 1-68) and 115-volt AC power from the forward main AC bus No. 4 (figure 1-65).

The aft system receives 28-volt DC power from the main DC bus No. 2 (figure 1-67).

FORWARD DOOR AND RAMP SYSTEM.

Visor.

The visor, in the closed and locked position, provides the enclosure for the front end of the pressure vessel and support structure for the radome and radar components. The visor is capable of being operated during a constant 35-knot wind and withstanding gusts up to 70 knots when open.

VISOR ACTUATION SYSTEM. The visor actuation system consists of a hydraulic motor driving a chain transmission over a curved rack installed in the visor. The actuation unit is mounted to the forward end of the cab top structure. When the actuator is energized to open or close, the chain engaging the rack teeth drives the rack and visor about the hinge arm. The chain is held in place by a pressure shoe assembly. The actuator contains dual, spring-loaded, hydraulically operated brakes that automatically stop and hold the visor position at any time the actuator is deenergized. Each brake is designed to hold the visor open when the visor is subjected to 70-knot wind gust loads.

VISOR LATCHING AND LOCKING SYSTEM. The visor latching and locking system consists of 25 hydraulic locks and 16 hooks and yoke pin combination latches. Twenty-three of the locks are identical tapered pin and cone locks. They are located around the periphery of the visor canted bulkhead and ramp, with seven on each side of the fuselage canted bulkhead interface. Conical fittings are mounted on the fuselage and ramp side, and mating cone-shaped studs are mounted on the visor. On visor closing, the stud on the visor mates with the conical fitting on the fuselage side and is hydraulically locked in place by the actuation of the pin through the cone. The locks located on the forward cab top bulkhead are hydraulically actuated similar to the locks on the canted bulkhead. Eight hooks are mounted on the left and right side of the cab top. These hooks provide a cradle to engage eccentric pins located on the visor yokes.

Visual inspection of the visor locks is accomplished by checking mechanical lock indicators from the ramp floor for the side panel locks and through the ramp extension hatch for the ramp bulkhead locks. The two locks on the forward cab top bulkhead are visible from the catwalk in the visor. These mechanical lock indicators are provided on each of the 23 canted bulkhead hydraulically actuated locks. Limit switches on each lock are connected into the door lock warning system. Limit switches are provided on the top four visor locks on each side of the canted bulkhead to withhold the visor opening sequence until these eight locks are fully unlocked.

VISOR OPERATION. Locking, unlocking and operation of the visor is controlled from the loadmaster's forward control panel. It is automatically sequenced by limit switches controlling the operation of solenoid operated hydraulic valves.

Forward Ramp, Ramp Extension and Toes.

Deployment of the ramp, ramp extension, and toes forms a 19-foot wide and 23-foot long bridge between

the front end of the cargo floor and the ground for cargo loading when the airplane is in the forward or level kneeled position. When the ramp and ramp extension are deployed, the toes stowed and the four ramp extension jacks located on the front end of the ramp extension are deployed, a 19-foot wide, 19-foot long bridge is provided for loading cargo from truck beds or a dock.

FORWARD RAMP. The forward ramp, when closed and locked, forms the forward lower pressure vessel structure between the visor and the forward fuselage. The forward ramp bulkhead mates with the visor and mechanical seals on the visor and forward fuselage structure and seals the ramp for pressurized flight. The ramp skin is the pressure barrier and is designed to take ditching loads.

FORWARD RAMP ACTUATION SYSTEM. Actuation of the ramp is accomplished by a hydraulic actuator located on each side of the ramp. The actuators are installed in the forward fuselage structure and the outboard side of the ramp cargo floor. The actuators have the capability of holding the ramp in any intermediate position for cargo loading operations and have the capability of lifting the ramp, extension and toes when the ramp is loaded with the two 7500-pound cargo pallets or equivalent.

FORWARD RAMP LOCKING SYSTEM. The ramp locking system is mounted in the left and right forward fuselage side panel. Four hooks on each side are connected to a linear hydraulic actuator through a series of bellcranks and push-pull rods.

When the ramp is closed and the locking system is actuated, each hook engages a pin and pulls the ramp up to its fully closed and locked position until the actuator's internal mechanical lock engages. Mechanical lock indicator flags provide visual inspection of this locked condition. In addition, limit switches are provided on both left and right sides to give not locked indications for the door lock warning system.

The "over center" arrangement of the mechanism tends to lock the hooks more securely when fuselage pressurization loads are applied through the hooks. In the event of a fouled or jammed lock or linkage during locking or unlocking operations, the system stalls the actuator. This feature prevents a "lock safe" false indication. In the event any of the hooks or bellcranks should fail in flight, the adjacent hooks, fuselage, and ramp back-up structure are capable of supporting the resulting redistributed load, up to the limit load.

Forward Cargo Door and Ramp System Controls.

Controls for the forward cargo door and ramp system are located on the L.H. FWD LOADMASTER'S CONTROL panel and on the copilot's cargo doors arming control panel located on the copilot's side console (figure 1-122).

FORWARD CARGO DOORS ARMING SWITCH. The two-position lever-lock CARGO DOORS FWD arming switch is used to activate the LH FORWARD LOADMASTER CONTROL panel. Placing the switch to "ARM" causes the ARMED light on the copilot's CARGO DOORS arming control panel and the ARMED light on the LH FORWARD LOADMASTER CONTROL panel to come on, to indicate that the panel is activated. Placing the switch to "SAFE" de-activates the panel causing both ARMED lights to go off.

CARGO DOORS GROUND CONTROL SWITCH. The guarded GROUND CONTROL switch provides electrical power to the VISOR OPERATE switch when placed to the "OPR" position. Placing the switch to "COMPL" de-activates the VISOR OPERATE RAMP OPERATE, and RAMP ADJUST switches and relieves pressure in the ramp, ramp extension, and ramp toe actuators when operating in the drive in mode, or the ramp extension actuators when operating in the truck mode.

CARGO DOORS VISOR OPERATE SWITCH. The visor OPERATE lever-lock switch spring-loaded to the "OFF" position, is used to control the operation of the visor. Placing the switch to "OPEN" and holding it in this position, opens the visor. When the visor is fully open, the RAMP OPERATE switch is armed. Placing the switch to "CLOSE," after the ramp extension is stowed, closes and locks the visor.

CARGO DOORS RAMP POSITION SELECT SWITCH. The RAMP SELECT lever-lock switch is used to select the desired ramp position for automatically sequencing the ramp and ramp extension. Placing the RAMP SELECT switch to "TRUCK" sets up the electrical circuit for automatic sequencing of the ramp and ramp extension for truck loading. Placing the RAMP SELECT switch to "DRIVE IN" sets up the electrical circuit for automatic sequencing of the ramp, ramp extension and toes for drive-in loading. The "OFF" position disarms the electrical circuit for automatic sequencing of the ramp position.

CARGO DOORS RAMP OPERATE SWITCH. The RAMP OPERATE lever-lock switch, spring-loaded to the "OFF" position, is used to extend and stow the ramp. Placing and holding the switch to "OPEN" while in the truck mode, causes the ramp extension to extend until its floor is even with the ramp. The ramp then unlocks and extends until its floor is in the same plane as the fuselage cargo floor. Placing and holding the switch to "OPEN" while in the drive-in mode, causes the ramp extension and toes to extend until the floor is even with the ramp. The ramp, extension, and toes continue downward until contact with the ground. When the ramp has stopped moving, the switch is released and it returns to the "OFF" position. Placing the switch to "CLOSE" reverses the operation.

CARGO DOORS RAMP ADJUST SWITCH. The RAMP ADJUST lever-lock type toggle switch is spring-loaded to the "OFF" position. The "UP" and "DOWN" positions are used to adjust the ramp to the desired height only during truck loading and when extension support struts are clear of ground contact or stowed. This switch operates the ramp actuators only. The ramp and ramp extension floors are in the same plane.

LAMP TEST SWITCH (LH FORWARD LOADMASTER CONTROL PANEL). On 70168, 00450 and up and airplanes modified by T.O. 1259, a three-position LAMP TEST switch is used to test the lights on the LH FORWARD LOADMASTER CONTROL panel (figure 1-122). Placing the switch to "TEST" turns on the ARMED, RAMP ARMED and ROLLER FAULT lights. Releasing the switch to "OFF" turns off the ARMED and RAMP ARMED light. Momentarily placing the switch to "ROLLER FAULT EXTING" turns off the ROLLER FAULT light.

On 68304, 68307, 70167, and 70170 through 00449 not modified by T.O. 1259, a two-position LAMP TEST switch is used to test the light on the LH FORWARD LOADMASTER CONTROL panel. Placing the switch to "ON" turns on the ARMED light. Returning the switch to "OFF" turns off the ARMED light.

LAMP TEST SWITCH (LH FORWARD LOADMASTER DOOR LOCK STATUS INDICATOR PANEL). A two-position LAMP TEST switch is used to test the lights on the LH FORWARD LOADMASTER DOOR LOCK STATUS INDICATOR panel (figure 1-122). Placing the switch to "ON" turns on the panel lights. Returning the switch to "OFF" turns off the panel lights.

Note

The PRESS. DOOR OPEN and UNPRESS DOOR OPEN lights on the pilot's annunciator panel also come on.

Forward Cargo Doors and Ramp System Lights.

A visual indication status of the forward cargo doors and ramp system is provided by a light on the CARGO DOORS panel on the copilot's side console (figure 1-121) and by two indicator lights on the CARGO DOORS portion of the L.H. FORWARD LOADMASTER CONTROL panel (figure 1-122). A visual indication of the status of the cargo door and ramp system latches is provided by 27 pushbutton indicators on the LH FORWARD LOADMASTER DOOR LOCK STATUS INDICATOR panel.

The following is a description of the lights:

FORWARD CARGO DOORS ARMED LIGHT. An ARMED light on the copilot's door arming control panel comes on to indicate that the loadmaster's left-hand forward control panel is activated. This action occurs when the arming switch is placed to the "ARM" position.

CARGO DOORS ARMED LIGHT. A CARGO DOORS ARMED light on the loadmaster's forward left-hand control panel comes on when the panel is activated by the CARGO DOORS FWD arming switch on the copilot's CARGO DOORS arming panel located on the copilot's side console.

CARGO DOORS ROLLER FAULT LIGHT. On 70168, 00450 and up and airplanes modified by T.O. 1259, a ROLLER FAULT light comes on whenever either of the lower side guide rollers in the visor actuator fails. The light stays on until the fault is corrected and the LAMP TEST switch is momentarily placed to "ROLLER FAULT EXTING."

CARGO DOORS RAMP ARM LIGHT. A CARGO DOORS RAMP ARMED light on the LH FORWARD LOADMASTER'S CONTROL panel comes on after the visor is fully open, then the ramp positioning and operation may be accomplished.

VISOR LOCK STATUS LIGHTS. Two VISOR UPPER NOT LKD, seven VISOR LH NOT LKD, seven VISOR RH NOT LKD, and nine VISOR/RAMP NOT LKD lights on the DOOR LOCK STATUS portion of the LH FORWARD LOADMASTER CONTROL panel, come on when the visor locks are not fully locked.

VISOR LOCK MECHANICAL INDICATORS. Each of the side and bottom visor locks are equipped with a mechanical indicator to indicate the visor lock status. When the indicator is extended, the visor lock is locked. When the indicator is retracted, the visor lock is not fully locked.

RAMP TO FUSELAGE LOCK STATUS LIGHTS. Two RAMP TO FUSELAGE (LH and RH) NOT LKD lights, on the DOOR LOCK STATUS portion of the LH FORWARD LOADMASTER CONTROL panel, come on when the ramp-to-fuselage lock system is not fully locked.

RAMP TO FUSELAGE LOCK MECHANICAL INDICATORS. Each ramp to fuselage lock is equipped with a mechanical indicator to indicate the status of the ramp to fuselage lock. When the indicator is extended, the lock is locked. When the indicator is retracted, the lock is unlocked.

Note

The BYPASS portion of the NOT LKD/BYPASS lights come on when the light assembly is depressed. This action is accomplished when a locking switch malfunctions or is out of rig. After the mechanical locks are checked the not-locked circuit is bypassed causing the PRESS-DOOR OPEN OR UNPRESS-DOOR OPEN lights on the pilots' annunciator panel to go off.

Forward Cargo Door and Ramp System Operation and Sequencing Procedures.

WARNING

Do not operate the forward loading system while a twisting force is being applied to the fuselage about the longitudinal axis of the airplane. A twisting force will exist when the airplane is not symmetrically supported (i.e., one MLG partially or fully kneeled, one MLG strut deflated, or all tires flat on one MLG). Twisting of the fuselage can cause the visor door to bind, resulting in damage to the visor door and locks. Failure to comply with this warning may result in damage to the airplane and injury to personnel.

The following procedures are used for the normal operation and sequencing of the forward cargo doors and ramp system. The airplane must be supplied with necessary electrical, hydraulic and pneumatic power.

VISOR OPENING OPERATION.

1. Forward Scanner - IN POSITION

Station a crew member outside the airplane and in direct interphone communication. This crew member will assist in clearing the forward area of the airplane, clearing the APU's for starting and deploying the ramp extension support jacks.

2. Cargo Doors Fwd Arming Switch - ARM

The armed light on the copilot's cargo doors arming control panel and the LH forward loadmaster control panel will come on. This indicates that power is available at the panel.

CAUTION

The Cargo Doors Fwd arming switch must remain in the ARM position and electrical power maintained on the airplane during the entire loading/offloading operation. Failure to do so will interrupt the hydraulic pressure relief system and cause damage to the airplane.

3. No. 4 Hydraulic System - PRESSURIZED

Provide hydraulic pressure from the ATM, hydraulic power cart or engine driven pumps. If the ATM is used - follow the Turning on ATM checklist.

4. Valve A Safety Guard - CHECKED INSTALLED

Check that the safety guard is installed on valve A.

5. Forward Loading Control Hydraulic Manifold Cover-CLOSED (IF INSTALLED).

On 70168, 00452 and up, and airplanes modified by T.O. 1262, ensure that the cover on the forward loading control manifold is closed.

6. Cargo Door System Indicators - TESTED

Test the indicator lights on the LH forward loadmaster door lock status indicator panel and the LH forward loadmaster control panel by actuating their respective Lamp Test switches.

On 70168, 00450 and up, and airplanes modified by T.O. 1259, momentarily place the Lamp Test switch to ROLLER FAULT EXTING to extinguish the roller fault light.

7. Ground Control Switch - OPR

Electrical power is now available to the Visor Operate switch.

8. Visor Operate Switch - OPEN/OFF

Hold this switch OPEN until the ramp armed light comes on. All the visor not lkd lights will come on before the visor starts to open and the mechanical indicators retract. If the visor not lkd lights do not come on in approximately 10 seconds, release the visor operate switch.

WARNING

Do not place the Ground Control switch to COMPL while the visor is open and ramp/ramp extension is in the closed position. Failure to comply can result in injury to personnel and damage to the airplane.

CAUTION

Coordination will be required between the Navigator and Loadmaster prior to opening the visor. Movement of the visor during the first 5 minutes of alignment, or within 5 minutes after turning off the IDNE, may damage the IMU.

CAUTION

Opening of the visor while the MMR system is turned on could cause damage to MMR components.

CAUTION

If the visor opening operation is stopped before the visor reaches its full open position, the visor shall be closed and locked, then opened without interruption. Failure to comply could result in damage to the airplane structure and visor locks.

CAUTION

When opening the visor, do not suddenly reverse the mode of operation without first allowing the visor to come to a full stop for at least three seconds. Failure to comply may result in damage to the visor hydraulic system.

On 68304, 68307, 70167 and 70170 through 00449 not modified by T.O. 1259, observe the visor during operation to detect the following conditions:

a. Visual evidence that a guide roller is not broken or missing.

b. Shiny scrape marks on the visor rack grooves. These marks indicate that the actuator lower back up shoes are contacting the grooves.

c. Failure of the visor to snub when approaching the fully open or closed position.

d. Failure of the ramp armed light to come on when the visor is fully open (other than an electrical malfunction).

e. The maximum visor opening time should be 53 seconds. The maximum closing time should be 40 seconds.

CAUTION

If any of the above conditions are noted or limits exceeded, close the visor, if possible, and do not operate the visor until maintenance action has been taken. Failure to comply could result in damage to the visor and/or airplane.

CAUTION

On 70168, 00450 and up and airplanes modified by T.O. 1259, if the roller fault light comes on, close the visor, if possible, and do not operate the visor until maintenance action has been taken. Failure to comply could result in damage to the visor and/or airplane.

TRUCK LOADING RAMP POSITIONING.

The following procedures are used to position the ramp and ramp extension for truck loading:

1. Ramp Select Switch - TRUCK

This action sets up the electrical circuit for automatic sequencing of the ramp and ramp extension for truck loading.

WARNING

The position of the Ramp Select switch shall not be changed during the entire opening and closing cycle for the selected mode of operation (truck). Failure to observe this warning may result in injury to personnel or damage to the airplane.

WARNING

No weight is allowed on the ramp extension when it is not supported by the ramp extension support jacks. Failure to comply could result in injury to personnel and damage to the extension structure.

Note

The airplane must be kneeled in the required loading mode before extending the ramp/ramp extension.

2. Ramp Operate Switch - OPEN/OFF

When the Ramp Operate switch is placed and held in the OPEN position, the ramp extension will lower until its floor is level with the ramp floor. The ramp will then unlock and move down to level with the airplane floor. The ramp not lkd lights on the LH forward loadmaster door lock status panel will come on and will stay on until the ramp and the ramp extension is closed and locked.

3. Ramp Adjust Switch - AS REQUIRED

Adjust the height of the ramp and the ramp extension by placing the Ramp Adjust switch in the UP or DOWN position as required to raise or to lower the ramp and the ramp extension as necessary for truck or dock on/off loading.

The height of the ramp can be raised or lowered as necessary for truck or dock on/off loading and to remove valleys or crests by using the Ramp Adjust switch as follows:

CAUTION

Ensure that there is adequate clearance between the base of the ramp extension support jacks and the ground before repositioning the forward ramp using the Ramp Adjust switch. Manually adjust the ramp extension jacks as required to clear the ground. Failure to comply could result in damage to the airplane structure.

a. Station an observer outside the forward end of the airplane to assist in determining when the coplanar position is obtained. This man shall also adjust the ramp extension support jacks as required.

b. Place the Ramp Adjust switch to the UP position if the ramp floor is below the level of the cargo compartment floor.

c. Place the Ramp Adjust switch to the DOWN position if the ramp floor is above the level of the cargo compartment floor.

Note

A slight crest between the forward ramp floor and the cargo compartment floor is acceptable (ramp below coplanar with the cargo compartment floor). A valley between the forward ramp floor and the cargo compartment floor is never acceptable (ramp above coplanar with the cargo compartment floor).

If the forward ramp extension has to be raised or lowered to be coplanar with the forward ramp floor, proceed as follows:

WARNING

The following sequence of events must be performed in exactly the same order as stated. No steps shall be omitted or partially performed. Failure to comply with this warning could result in injury to personnel and/or damage to the airplane.

a. Station an observer outside the forward end of the airplane to assist in determining when the coplanar position is obtained. This man shall also adjust the ramp extension support jacks as required.

b. Position the Ground Control switch, on the LH Forward Loadmasters Control panel, the COMPL position.

c. Position the Fwd Cargo Doors Arm switch on the copilot's Cargo Doors Panel to SAFE.

Note

Install an Air Force Form 1492 on the Ground Control switch and the Fwd Cargo Doors Arm switch.

d. Remove the safety guard from the Arm A manual override valve.

e. Select raising of the ramp extension by depressing and holding the Ramp Extension J override valve. Raise the extension by depressing and holding the Arm A valve until the ramp extension is slightly above coplanar with the ramp floor, then release the A and J valves in that sequence.

f. Direct the outside observer to adjust the ramp extension support jacks so that their height from the ground will result in the extension being slightly below coplanar with the ramp after step g has been accomplished.

g. Rotate the Ramp Extension Hold R valve lever to the LOCKED position. The ramp extension will lower until its support jacks rest on the ground.

h. Rotate the Ramp Extension R valve lever to the RELEASED position.

i. Repeat steps e through h until the ramp extension floor is coplanar or slightly below coplanar with the forward ramp floor and all the ramp extension support jacks are resting on the ground.

j. Place the Fwd Cargo Doors Arm switch to the ARM position.

Note

A slight crest between the ramp extension and the forward ramp floor is acceptable (ramp extension below coplanar with the forward ramp floor). A valley between the ramp extension and the forward ramp floor is never acceptable (ramp extension above coplanar with the forward ramp floor).

On 68304, 68307 thru 70168 and 70170 thru 00448 not modified by T.O. 1467, it is possible for the visor to droop during operation of the Ramp Adjust switch due to hydraulic pressure surges momentarily unlocking the visor brake. This will be evidenced by the Ramp Adjust switch becoming inoperative and the ramp armed light going off. If this occurs, accomplish the following:

a. Release the Ramp Adjust switch.

b. Ensure the Ground Control switch is in OPR.

c. On 70168, 00452 and up and airplanes modified by T.O. 1262, open the cover on the forward loading control hydraulic manifold.

d. Depress and hold the Visor Unlock C and Visor UP E manual override buttons until the ramp armed light comes on. If the light does not come on within 30 seconds, release C and E manual override buttons and obtain corrective maintenance action before continuing with the ramp positioning procedure.

e. Release C and E manual override buttons.

f. On 70168, 00452 and up and airplanes modified by T.O. 1262, close the cover on the forward loading control hydraulic manifold.

4. Ramp Extension Jacks - DEPLOYED

Direct the outside crew member to release and deploy the ramp extension jacks.

WARNING

Make sure the ramp extension has stopped before attempting the following procedural steps. Failure to comply could result in injury to personnel.

a. Holding the jack pad firmly, push in the jack release latch to release the support jack from its stowed position, allowing it to drop onto the roller guides.

WARNING

Do not allow the support jack to free-fall under its own weight to its vertical position. Failure to comply could result in personal injury as the jack may swing and hit the crew member deploying the jack.

CAUTION

Do not permit the jack to twist or rock from side to side during withdrawal and deployment. Failure to comply with this caution can cause the jack to become disengaged from its guide tracks.

b. Still holding the jack pad firmly, pull the support jack forward from its stowed position and swing it down until it locks into its vertical position.

WARNING

When deploying the extension jacks, ensure the roller arm is engaged in the recessed notch. If the roller arm is not fully seated in the recessed notch, the ramp extension jacks may collapse when weight is applied to the ramp.

Note

The support jack inner tube and outer tube extension, and the alignment holes for the extended position for these tubes, are color coded with the same color. This assists in quick extension and locking of the support jack in its loading positions. Always install the quick release pin in the hole that is color coded with the same color as the applicable extended tube. For example, install the quick release pin in the orange color coded hole when the extended tube color is orange.

Note

The ramp extension support jacks have two extended positions. The first position is the forward kneel loading position. The second position is the level kneel loading position. Complete step (c) for the forward kneel position. Complete step (d) for the level kneel position.

Note

If the ramp extension has been lowered below the level of the ramp floor, the inner tube of the support jack may not extend sufficiently to install the quick release pin in the lower hole of the inner tube extension to lock the tubes together. In this instance the pin should be installed in the center hole of the inner tube extension.

c. To extend the support jacks to the forward kneel loading position, proceed as follows:

(1) Pull the Pull First quick release pin, allowing the inner tube to extend.

(2) Install the quick release pin in the first aligned hole in the inner tube, and the lower hole of the outer tube extension, thereby locking the tubes together.

(3) Turn the fine adjustment nut in a counterclockwise direction until the jack pad is in firm contact with the ground, and the jack rollers are seated in the slots at the top of the jack.

d. To extend the support jacks to the level kneel position, proceed as follows:

(1) Pull the Pull First quick release pin allowing the inner tube to extend to its full down position.

(2) Install the quick release pin in the first aligned hole in the inner tube, and the lower hole in the outer tube extension, thereby locking the tubes together.

WARNING

Make sure the Pull First quick release pin is installed locking the inner tube and the outer tube extension together before pulling Pull Second pin. Failure to comply will cause the outer tube extension to extend rapidly and trap fingers between the bottom end of tube and the fine adjustment nut.

(3) Pull the Pull Second quick release pin, allowing the outer tube extension to extend until the jack pad contacts the ground.

(4) With one hand, hold the fine adjustment nut and lift up until one of the pin holes in the outer tube extension and the center hole in the outer tube are aligned.

(5) Install the quick release pin in the aligned holes locking the outer tube extension and the outer tube together.

(6) Turn the fine adjustment nut in a counterclockwise direction while holding the jack until the jack pad is in firm contact with the ground.

e. Advise the loadmaster that the support jacks are deployed and extended, ready for pressure-relieving the ramp extension actuators.

5. Ground Control Switch - COMPL

CAUTION

The ramp extension shall be pressure relieved manually if loss of electrical power occurs and loading/off-loading is to be continued. The ramp extension is relieved by rotating the Ramp Extension Hold R lever to LOCKED. Failure to comply could result in damage to the ramp and/or ramp extension.

Placing the switch to COMPL deactivates the Ramp Operate and Ramp Adjust switches and pressure relieves the ramp extension actuators.

CAUTION

The Cargo Doors Fwd Arming switch must remain in the ARM position during the entire loading/offloading operation. Failure to comply could result in damage to the ramp or ramp extension.

6. No. 4 Hydraulic System - DEPRESSURIZED

CLOSING PROCEDURES FOR TRUCK LOADING - FORWARD RAMP AND FORWARD RAMP EXTENSION.

To close the forward ramp, and the forward ramp extension from the truck loading position, proceed as follows:

1. Forward Scanner - IN POSITION

Station a crew member outside the airplane and in direct interphone communication. This crew member will ensure that there is adequate clearance between the ramp extension and the cargo loaded on the ramp, he will assist in clearing the forward area of the airplane, clearing the APUs for starting and stowing the ramp extension support jacks.

1A. Ramp and Ramp Extension Rail Bridge - STOWED

On 70168 and 00453 and up and airplanes modified by T.O. 1239, stow the rail bridge.

2. No. 4 Hydraulic System - PRESSURIZED

3. Ground Control Switch - OPR

Electrical power is now available to the Ramp Operate and Ramp Select switches.

WARNING

The position of the Ramp Select switch shall not be changed during the entire opening and closing cycle for the selected mode of operation. Failure to observe this warning may result in injury to personnel or damage to the airplane.

WARNING

Advise the outside crew member that the ramp and the extension are to be partially raised to stow the ramp extension support jacks. Failure to comply could result in injury to the crew member if he is unaware the ramp and extension are to be moved.

Note

Ensure that the Ramp Extension Hold R lever is positioned to RELEASED. Failure to comply will prevent stowage of the ramp extensions.

4. Ramp Operate Switch - CLOSE

Place and hold the Ramp Operate switch in the CLOSE position until the ramp extension support jacks are clear of the ground, then release the switch, allowing it to return to its OFF position.

WARNING

Insure the ramp and the ramp extension have stopped moving before advising the outside crew member to retract and stow the ramp extension support jacks. Failure to comply could result in injury to the outside crew member.

WARNING

No weight is allowed on the ramp extension when it is not supported by the ramp extension support jacks. Failure to comply could result in injury to personnel and damage to the ramp extension structure.

5. Ramp Extension Support Jacks - STOWED

a. After the ramp has stopped moving, advise the outside crew member to retract and stow the ramp extension support jacks.

Note

The ramp extension support jacks have two extended positions. The first position is the forward kneel loading position. The second position is the level kneel loading position. Complete step (b) to retract the support jacks from the forward kneel position ready for stowing. Complete step (c) to retract the support jacks from the level kneel loading position ready for stowing.

b. To retract the support jack from the forward kneel loading position, proceed as follows:

(1) Holding the jack pad firmly with one hand, pull the quick release pin installed in the bottom hole of the outer tube extension.

(2) Still holding the jack pad firmly, push up on the pad to retract the inner tube into the outer tube extension.

(3) Align hole in the inner tube with center hole in the outer tube and install the quick release pin in the aligned hole to lock the inner tube in its fully retracted position.

(4) Turn the fine adjustment nut in a clockwise direction to fully retract the jack pad.

c. To retract the support jacks from the level kneel loading position, proceed as follows:

(1) Holding the jack firmly with one hand, pull the quick release pin installed in the bottom hole of the outer tube.

(2) Still holding the jack pad firmly, push up on pad until outer tube extension is fully retracted in outer tube.

(3) Align hole in outer tube extension with top hole in outer tube and install the quick release pin in the aligned hole to lock outer tube extension in its fully retracted position.

(4) Remove the quick release pin installed in the bottom hole of the outer tube extension.

(5) Holding the jack pad firmly, push up on pad to fully retract the inner tube into the outer tube extension.

(6) Align hole in inner tube with center hole in outer tube and install the quick release pin in the aligned hole to lock the inner tube in its fully retracted position.

(7) Turn the fine adjustment nut in a clockwise direction to fully retract the jack pad.

CAUTION

Do not permit the jack to twist or rock from side to side during retraction and stowage. Failure to comply with this caution can cause the jacks to become disengaged from its guide tracks.

d. Holding the jack pad firmly, swing the jack up and forward to an approximate horizontal position.

CAUTION

Make sure the ramp extension support jacks are properly locked in the stowed position. Failure to comply could result in damage to the ramp extension structure, should the jacks not be locked in place allowing the jacks to swing free when the ramp extension moves to its vertical position.

e. Holding the jack with one hand, push in the release latches with the other hand, then push the jack up and aft into its stowed position and lock in place.

Note

A partial turn on the fine adjustment nut may be necessary to enable the support jack to lock into place.

f. Advise the loadmaster the jacks are stowed and locked in place ready for the ramp closing operation to continue.

6. Ramp Operate Switch - CLOSE/OFF

Hold the switch in this position until the ramp is closed and locked and the ramp extension is stowed. All the ramp not lkd lights should go off and the mechanical indicators extend.

7. Ramp Select Switch - OFF

WARNING

Do not place the Ground Control switch to COMPL while the visor is open and the ramp/ramp extension is in the closed position. Failure to observe this warning can result in injury to personnel and damage to the airplane.

DRIVE-IN LOADING RAMP POSITIONING.

The following procedures are used to open the ramp and ramp extension for drive-in loading.

1. Ramp Select Switch - DRIVE IN

This action sets up the electrical sequencing of the ramp, ramp extension and toes for drive-in loading.

WARNING

The position of the Ramp Select switch shall not be changed during the entire opening and closing cycle for the selected mode of operation. Failure to observe this warning may result in injury to personnel or damage the airplane.

Note

The airplane must be kneeled in the required loading mode before extending the ramp/ramp extension/ramp extension toes.

2. Ramp Operate Switch - OPEN/OFF

When the Ramp Operate switch is placed and held in the OPEN position, the ramp extension will lower and the extension toes will extend simultaneously until the extension floor is level with the ramp floor, the ramp will then unlock from the fuselage, the ramp not lkd indicator lights on the LH forward loadmaster door lock status panel will come on, the ramp will lower until the ramp ground support pads contact the ground (forward kneeled loading only) or the ramp actuators are fully extended (level kneel only), the ramp not lkd indicator lights will stay on and the ramp lock indicators will stay retracted until the ramp is closed and locked.

3. Ground Control Switch - COMPL

CAUTION

The ramp, ramp extension and ramp extension toes shall be pressure relieved manually if loss of electrical power occurs and loading/off-loading is to be continued. The ramp is relieved by rotating both ramp actuator relief valve knobs counterclockwise, the ramp extension is relieved by rotating the Ramp Extension Hold R lever to LOCKED, and the ramp extension toes are relieved by rotating the Toe Plate Operate T lever to LOCKED. Failure to comply could result in damage to the ramp and/or ramp extension and/or ramp extension toes.

For drive-in loading from the forward kneel position, the ramp extension/ramp extension toes and the ramp actuators are pressure relieved to prevent the ramp support pads and the extension toes from rising off the ground during loading operations. Placing the Ground Control switch in the COMPL position will automatically accomplish this operation. For drive-in loading from the level kneeled position, the ramp is supported by the fully extended actuators as the ground support pads are not in contact with the ground.

4. No. 4 Hydraulic System - DEPRESSURIZED

CLOSING PROCEDURES FOR DRIVE-IN LOADING - FORWARD RAMP EXTENSION AND FORWARD RAMP.

To close the forward ramp and the forward ramp extension from the drive-in loading position, proceed as follows:

1. Forward Scanner - IN POSITION

Station a crew member outside the airplane and in direct interphone communication. This crew member will ensure that there is adequate clearance between the ramp extension and the cargo loaded on the ramp, he will assist in clearing the forward area of the airplane, clearing the APUs for starting and stowing the ramp extension support jacks.

2. No. 4 Hydraulic System - PRESSURIZED

3. Ground Control Switch - OPR

Electrical power is now available to the Ramp Operate and Ramp Select switches.

WARNING

The position of the Ramp Select switch shall not be changed during the entire opening and closing cycle for the selected mode of operation, (drive-in). Failure to observe this warning may result in injury to personnel or damage to the airplane.

Note

Ensure that the ramp actuator relief valve knobs are both rotated clockwise and that the Ramp Extension Hold R lever is positioned to RELEASED, and that the Toe Plate Operate T lever is positioned to RELEASED. Failure to comply will prevent closing of the ramp, and stowage of the ramp extension and ramp extension toes.

4. Ramp Operate Switch - CLOSE/OFF

When the Ramp Operate switch is placed and held in the CLOSE position, the cargo ramp will move to its closed position and lock to the fuselage. The ramp extension will then raise to its vertical position and simultaneously the ramp extension toes will move to their stowed position against the forward face of the ramp extension. When the ramp is properly locked in place, the forward ramp not lkd indicator lights on the LH forward loadmaster door lock status panel will go off.

WARNING

Do not place the Ground Control switch to COMPL while the visor is open and the ramp/ramp extension is in the closed position. Failure to observe this warning can result in injury to personnel and damage the airplane.

5. Ramp Select Switch - OFF

VISOR CLOSING OPERATION.

CAUTION

Coordination will be required among the Navigator and Loadmaster prior to closing the visor. Movement of the visor during the first 5 minutes of alignment or within 5 minutes after turning off the IDNE may damage the IMU.

1. Forward Scanner - IN POSITION

Station a crew member outside the airplane and in direct interphone communication. This crew member will assist in clearing the forward area of the airplane of personnel and equipment. Observe the following during the visor closing process:

a. Bayonet Locks - RETRACTED

b. Ramp Guide Assembly - OPENED
Check that the ramp guide assembly opens to receive rack entry into ramp.

c. Cargo Clearance - CHECKED

d. Ground Support Pads - STOWED

e. Ramp Extension Toes - LOCKED

f. Ramp Extension Jacks - STOWED

2. Door Status Panel Lights - CHECKED

Check that all the visor and ramp not lkd lights on the LH forward loadmaster door lock status panel are on.

The visor not lkd lights may not be on until the Visor Operate switch is moved to the CLOSE position and all bayonet locks have retracted.

Note

When the Visor Operate switch is placed to the CLOSE position, the visor will move down to the closed position and lock to the fuselage. The ramp armed light on the LH Forward Loadmaster's Control panel will go off as the visor starts to move down from its open position. When the visor is closed and locked, the visor not lkd lights on the LH forward loadmaster door lock status panel will go off.

3. Visor Operate Switch - CLOSE/OFF

Hold the Visor Operate switch in the CLOSE position until the visor is closed, the not lkd lights go off and the mechanical indicators extend.

CAUTION

When closing the visor, do not suddenly reverse the mode of operation without first allowing the visor to come to a full stop for at least three seconds. Failure to comply may result in damage to the visor hydraulic system.

4. Ground Control Switch - COMPL

5. No. 4 Hydraulic System - DEPRESSURIZED

6. Cargo Doors Fwd Arming Switch - SAFE

Visually check the visor to ramp extension mechanical locks for engagement.

Manual Override Operation - Forward Cargo Doors.

WARNING

Do not operate the forward loading system while a twisting force is being applied to the fuselage about the longitudinal axis of the airplane. A twisting force will exist when the airplane is not symmetrically supported (i.e., one MLG partially or fully kneeled, one MLG strut deflated, or all tires flat on one MLG). Twisting of the fuselage can cause the visor door to bind, resulting in damage to the visor door and locks. Failure to comply with this warning may result in damage to the airplane and injury to personnel.

CAUTION

It is necessary that the following sequence be used during the manual override operation, and that the cautions contained in the manual operation of the forward cargo doors be observed.

The arming switch on the cargo doors arming control panel must be placed to SAFE prior to and during all manual operation in the truck or drive-in modes. Failure to comply may cause damage to the airplane. Verify the position and status of doors, ramps and locks prior to removal of the guard on the arming valve.

Note

The A valve has a lockout device that must be removed before operation.

The manual override operation for truck and drive-in is provided by the scroll checklist holder mounted next to the hydraulic manifold.

In the event electrical power is lost or unavailable, but hydraulic power is available, it will be necessary to use the manual override valves to operate the forward cargo doors (figure 1-123).

Note

The door lock status lights may be used as an aid in confirming door position.

VISOR OPENING PROCEDURES.

1. Place the Cargo Doors Fwd arming switch on the copilot's cargo doors arming control panel in the SAFE position.

2. On 70168 and 00452 and up and airplanes modified by T.O. 1262, open the cover on the forward loading control hydraulic manifold.

3. Remove the safety guard from A valve.

4. Unlock the visor, depress and hold D then A valves until all 25 visor locks are unlocked (visually check that all indicators are retracted into their housings and lock pins retracted, and not lkd lights are on), then release D then A valves.

CAUTION

Visually check to ensure that top 4 visor locks are fully unlocked before proceeding to open the visor. Failure to comply could result in damage to the visor and/or the canted bulkhead if the locks are not fully unlocked and the visor is raised.

Note

For mechanical indication of the locked and unlocked condition of the visor, 23 of the visor locks have a separate mechanical lock indicator. The remaining 2 locks (one each side of the BL 0 on the fuselage upper forward bulkhead) do not have this provision, and the locked and unlocked condition of these locks is provided by the position of the lock pins that are an integral part of the locks.

Note

When the visor unlocks from the fuselage, all the visor LH and RH visor upper and ramp not lkd indicator lights on the LH forward loadmaster door lock status panel will come on and will stay on until the visor is closed and locked. The 23 visor lock indicators will also be retracted into their housings and the lock pins on the 2 upper locks will be retracted.

5. Raise the visor, depress and hold C then E, then A valves until the visor reaches its full raised position, then release C and E, then A valves.

On 68304, 68307, 70167 and 70170 through 00449 not modified by T.O. 1259, observe the visor during operation to detect the following conditions:

a. Visual evidence that a guide roller is not broken or missing.

b. Shiny scrape marks on the visor rack grooves. These marks indicate that the actuator lower back up shoes are contacting the grooves.

c. Failure of the visor to snub when approaching the fully open and closed position.

d. Failure of the ramp armed light to come on when the visor is fully open (other than an electrical malfunction).

e. The maximum visor opening time should be 53 seconds. The maximum closing time should be 40 seconds.

CAUTION

If any of the above conditions are noted or limits exceeded, close the visor, if possible, and do not operate the visor until maintenance action has been taken. Failure to comply could result in damage to the visor and/or airplane.

CAUTION

On 70168, 00450 and up and airplanes modified by T.O. 1259, if the roller fault light comes on, close the visor, if possible, and do not operate the visor until maintenance action has been taken. Failure to comply could result in damage to the visor and/or airplane.

6. Install the safety guard over A valve.

CAUTION

No weight is allowed on the forward ramp extension while not ground supported in the Truck position or structural damage may result.

OPENING PROCEDURES FOR TRUCKLOADING - FORWARD RAMP AND RAMP EXTENSION.

1. Ensure R valve is closed, lever in RELEASED position.

2. Place the Cargo Doors Fwd arming switch on the copilot's cargo doors arming control panel in the SAFE position.

3. Disconnect the electrical connectors on both ramp actuators.

4. Close the relief valves on both ramp actuators; rotate knobs clockwise.

5. Remove the safety guard from A valve.

6. Lower the ramp extension, depress and hold H then A valves until the extension is coplanar with the ramp floor, then release H then A valves.

WARNING

Check with the outside observer to make sure no personnel are in the immediate area of the forward ramp before lowering the ramp extension. Failure to comply could result in injury to personnel.

7. Unlock and lower the ramp, depress and hold G then A valves until the ramp is coplanar with the cargo compartment floor, then release G then A valves.

Note

When the forward ramp unlocks from the fuselage, the ramp to fuselage LH and RH not lkd lights on the LH forward loadmaster door lock status panel will come on and will stay on until the ramp is closed and locked. The ten lock indicators will be retracted into their housings.

8. Install the safety guard over A valve.

WARNING

No weight is allowed on the forward ramp extension when it is not supported by its support jacks. Failure to comply could result in injury to personnel and/or damage to the ramp extension.

9. Advise the outside observer to manually deploy the ramp extension support jacks.

10. Open R valve, rotate valve lever to LOCKED position. (Ramp extension will settle until the ramp support jacks rest firmly on the ground.)

CLOSING PROCEDURES FOR TRUCKLOADING - FORWARD RAMP AND RAMP EXTENSION.

1. Place the Cargo Door Fwd arming switch on the copilot's cargo doors arming control panel in the SAFE position.

2. Close R valve, rotate valve lever to RELEASED position. (A small upward movement of the ramp extension may occur.)

3. Remove the safety guard from A valve.

4. Partially raise the ramp, depress and hold F then A valves until the outside observer advises that the ramp extension support jacks are approximately 12-inches off the ground, then release F then A valve.

WARNING

Check with the outside observer to make sure that he is clear of the forward ramp extension before attempting to raise the ramp. Failure to comply could result in injury to personnel.

CAUTION

Ensure that the ramp extension inboard logistic rails are in the stowed position before raising the ramp. Failure to comply could result in damage to the rails and/or the cargo on the ramp when the extension is raised.

5. Advise the outside observer to stow the ramp extension support jacks.

WARNING

No weight is allowed on the ramp extension when it is not supported by its support jacks. Failure to comply could result in injury to personnel and/or damage to the ramp extension.

6. Close the ramp, depress and hold F then A valves until the ramp is closed. Continue to hold F and A valves after the ramp is closed.

7. Lock the ramp to the fuselage, depress and hold L valve. Visually check that all ramp lock indicators are extended from their housings and the ramp to fuselage LH and RH not lkd lights are off, indicating the ramp is locked to the fuselage.

8. Release F, then L, and then A valves in that sequence.

9. Raise the ramp extension, depress and hold J then A valves until the extension reaches its full vertical position, then release J valve, rotate T valve lever to RELEASED position, then release A valve.

10. Open the relief valves on both ramp actuators, rotate knobs counterclockwise.

11. Reconnect the electrical connectors on both ramp actuators.

12. Install the safety guard over A valve.

Note

The visor should be closed at this time if drive-in loading operations are not to be accomplished. Refer to Visor Closing Procedures in this section.

OPENING PROCEDURES FOR DRIVE-IN LOADING - FORWARD RAMP AND RAMP EXTENSION.

1. Place the Cargo Doors Fwd arming switch on the copilot's cargo doors arming control panel in the SAFE position.

2. Disconnect the electrical connectors on both ramp actuators.

3. Close the relief valves on both ramp actuators, rotate knobs clockwise.

4. Remove the safety guard from A valve.

5. Select lowering of the ramp extension and simultaneous deployment of toes, depress and hold H valve, then rotate T valve lever to LOCKED position.

WARNING

Check with the outside observer to ensure no personnel are in the immediate area of the forward ramp before lowering the ramp extension. Failure to comply could result in injury to personnel.

6. Lower the ramp extension and simultaneously deploy toes, depress and hold A valve until the extension is coplanar with the ramp floor and toes are deployed, then release H then A valves.

7. Unlock and lower the ramp, depress and hold G then A valves until the ramp reaches its full drive-in position, then release G then A valves.

8. Install the safety guard over A valve.

9. Open the relief valves on both ramp actuators, rotate knobs counterclockwise.

10. Reconnect the electrical connectors on both ramp actuators.

11. Open R valve, rotate valve lever to LOCKED position. (This action will relieve the ramp extension and toe actuators, allowing toes to settle to the ground.)

CLOSING PROCEDURES FOR DRIVE-IN LOADING - FORWARD RAMP AND RAMP EXTENSION.

1. Place the Cargo Doors Fwd arming switch on the copilot's cargo doors arming control panel in the SAFE position.

2. Disconnect the electrical connectors on both ramp actuators.

3. Close the relief valves on both ramp actuators, rotate knobs clockwise.

4. Close R valve, rotate valve lever to RELEASED position.

5. Remove the safety guard from A valve.

6. Close the ramp, depress and hold F then A valves until the ramp is fully closed, continue to hold valves depressed.

WARNING

Ensure that the outside observer is clear of the ramp area before attempting to raise the ramp. Failure to comply could result in injury to personnel.

WARNING

No weight is allowed on the ramp extension when its toeplates are raised off the ground. Failure to comply could result in injury to personnel and/or damage to the extension.

7. Lock the ramp to the fuselage, depress and hold L valve. Visually check that all ramp lock indicators are extended from their housings and ramp to fuselage LH and RH not lkd lights are off, indicating the ramp is locked to the fuselage.

8. Release F, then L, then A valves in that sequence.

9. Select raising of ramp extension and simultaneous stowing of toes, depress and hold J valve.

10. Raise the ramp extension and stow the toes, depress and hold A valve until the extension reaches its full vertical position, then release J valve, then rotate T valve lever to RELEASED position, then release A valve.

11. Install the safety guard over A valve.

12. Open the relief valves on both ramp actuators, rotate knobs counterclockwise.

13. Re-connect the electrical connectors on both ramp actuators.

VISOR CLOSING PROCEDURES.

1. Place the Cargo Doors Fwd arming switch on the copilot's cargo doors arming control panel in the SAFE position.

2. Remove the safety guard from A valve.

3. Depress and hold C then A valves and visually check that all 23 visor lock indicators are retracted into their housings and the lock pins on the two top locks are fully retracted, indicating the locks are fully unlocked. The release C and A valves.

CAUTION

The visor locks and/or visor may be damaged if all locks are not fully retracted and the visor is closed. Repeat step 3 if the visor closing operation is stopped before the visor is fully closed.

4. Close the visor, depress and hold D then A valves until the visor is fully closed. Continue to hold D and A valves depressed.

5. Still holding D and A valves depressed, lock the visor to the fuselage, depress and hold B valve until all 25 visor locks are locked (23 lock indicators extended from their housings, lock pins on the two upper locks extended, and visor and ramp not lkd lights are off).

6. Release D, then B, then A valves in that sequence.

7. Install the safety guard over A valve.

8. On 70168 and 00452 and up and airplanes modified by T.O. 1262, close the cover on the forward loading control hydraulic manifold.

AFT CARGO DOOR AND RAMP SYSTEM.

The aft cargo door and ramp system consist of the aft ramp, pressure door, aft side cargo doors, and the aft center cargo door. The aft side cargo doors are operable on the ground only. The pressure door, aft ramp, and aft center door only are opened in flight for an ADS operation.

Aft Ramp.

The aft ramp is approximately 13.5 feet long, 20 feet wide, and three feet deep at the fuselage centerline. The aft ramp contains a cavity for the cargo loading winch and seven rows of 25,000 pound tiedown rings recessed in pans installed in the floor and attached to the bulkheads. A mechanical seal on the aft fuselage structure and lower end of the pressure door is provided for pressurized flight.

AFT RAMP ACTUATION SYSTEM. The aft ramp actuator installation, ramp holding and lifting capability for cargo loading operations are similar to that of the forward ramp. An additional feature is the asymmetry system which controls the actuator travel. The asymmetry system prevents unsymmetrical actuation which would cause the upper corner of the pressure door to move outboard and possibly damage the aft fuselage structure. This is prevented by keeping the two ramp actuators synchronized to within one inch during ramp actuation.

The ground support pads are provided to support the aft ramp for ground loading operations when the airplane is in the aft or level kneeled position. The pads are actuated by electrically operated actuators through a torque tube system. The pads are stowed and mechanically locked in place flat against the ramp aft bulkhead.

AFT RAMP LOCKING SYSTEM. The aft ramp locking system is similar to that of the front ramp system except that there are seven hooks on each side compared to four at the forward ramp.

Pressure Door.

The pressure door carries cabin pressure loads and supports cargo or vehicle loads when used as a ramp extension for ground loading. Skid strips spanning the full length of the pressure door, are provided for skidding cargo from the ground into the airplane. Wedge-shaped, full width toes bridge the offset between the end of the pressure door and the ground. The toes are in three sections and are manually deployed and mechanicallly locked. A lock release handle is provided on the left side of the door to unlock the toes from the stowed or deployed position when the pressure door is placed in the horizontal position so that the toes clear the ground. The toes will automatically lock in the stowed position, when the ramp and pressure door are moved to the closed position.

PRESSURE DOOR ACTUATION AND LOCKING. The pressure door functions as a pressure bulkhead during pressurized flight and as a ramp extension during ground loading. The door is positioned in the overhead hinge for cargo air drops and for truckbed loading functions. When the pressure door is closed, the upper end of the door is trapped behind fuselage structure, and nine fittings, equally spaced across the top of the door provide reaction points for fuselage pressurization loads. The lower end of the pressure door is fitted with nine hinge fittings, four of which are locked into the ramp fittings.

The upper pressure door seal is mounted to the fuselage structure just below the reaction fittings by a seal retainer running the width of the pressure door. Each of the two upper hinge assemblies consists of a roller that guides the door into its closed position, a hook fitting that engages the upper pressure door fittings, the selector actuator, the hinge lock fitting, and upper door actuator.

When the upper hinge is locked, the hinge selector actuator rotates the lock fitting through a one-tooth gear in the interlock mechanism until the lug traps the pressure door wedge fitting. At this point, the selector actuator linkage is in its "over center" position and is secured by a spring-loaded lock. The upper pressure door actuator rotates the door about the roller guides into the pressure door uplock.

The lower pressure door hinge contains the interlock mechanism, spring-loaded lockout plunger, idler arm attached to the ramp hinge fitting and the lower pressure door actuator. When the idler arm is in the horizontal position, the pressure door hinge pin is locked into the ramp fitting. This positions all nine hinge pins such that fuselage pressure loads on the door react against the ramp fittings. When the hinge selector actuators have been operated to lock the door to the upper hinge, the motion of the interlock mechanisms removes the hook from the end of the lower actuator. Retracting this actuator allows the spring-loaded plunger to retain the hook in the unlocked position. This prevents the upper hinge from becoming unlocked when the lower hinge is unlocked. The idler link attached to the actuator unlocks the lower door hinge pin. When the lower actuator is fully retracted, the lower hinge unlocking is completed. Before the pressure door can be raised, the ramp must be lowered to free the pressure door lower hinge pins from the ramp fittings. The door is then free to be actuated into the overhead position by the door upper actuator.

When the pressure door is retracted into the overhead position, it is restrained by the upper hinges at the forward end and a fuselage-mounted latch system on each side of the aft end. The latch system consists of two spring-loaded hooks, one on each side that are unlocked by a small hydraulic actuator mounted near the centerline of the airplane and is connected to the two hooks by a cable system. Each hook is spring-loaded to close so that the pins mounted in the pressure door snap into the hooks. A cable override system connects the two hooks to an emergency release handle located near the aft loadmaster's control panel.

WARNING

The pressure door uplock emergency release handle is to be used for ground maintenance only. Improper operation could cause the pressure door to fall rapidly and cause injury to personnel or damage to the airplane.

To pressure-seal the three-inch clearance gap between the vertical sides of the fuselage and the pressure door, a manually actuated seal is installed. These side seals are hinges to the fuselage side wall and are retracted and extended by the operator.

Aft Cargo Doors.

The aft cargo doors are unpressurized fairings, installed in the lower part of the fuselage, aft of the cargo compartment. The system contains the center door and two side doors. All three doors may be opened on the ground to provide access to the cargo compartment. Only the center door is operable in flight.

The doors will withstand a 70-knot wind from any direction in the fully opened position during ground operation. They will actuate in a 35-knot wind blowing from any direction and will withstand any condition of flight or ground handling while in the closed and locked position. They are designed for all conditions encountered during aerial delivery.

The center door is attached to the fuselage through the right and left roller carriage system near the aft end of the door and by two radius arms, one on each side near the forward end. The radius arms are actuated by jackscrews attached to the aft fuselage upper torque deck and to the radius arm. The center door is opened by a single hydraulic motor driving the jackscrews through a gear box. The jackscrews cause the radius arm to pivot in the aft direction so that the door slides aft and up.

During the closing cycle, the motion is reversed and the center door is guided into place through a system of guide posts, guide strips and by the action of slide blocks attached to the center door moving into tracks attached to the side doors. When closed, the center door and side doors are held together by a drag latch behind the forward slide blocks on the forward tracks only. This mechanism provides for proper alignment of the center and side doors to each other and to the ramp and aft fuselage contour.

The side doors are attached to the aft fuselage by two primary hinges and two slotted contour alignment hinges. Two hydraulic actuators rotate each door outward, through an angle of approximately 100 degrees during ground operations only. Latching devices are provided to hold the side doors to the aft fuselage, when in the closed position.

Aft Cargo Doors and Ramp System Controls.

Controls for the aft cargo door and ramp system are located on the L.H. AFT LOADMASTER CONTROL panel (figure 1-122) and on the copilot's CARGO DOORS arming control panel located on the copilot's side console (figure 1-121). Controls for ADS operation are located on the FORWARD ADS control panel and the LH AFT LOADMASTER CONTROL panel.

AFT CARGO DOORS ARMING SWITCH. The CARGO DOORS AFT lever-lock arming switch is used to activate the loadmaster's aft control panel. Placing the switch to "GROUND ARM" supplies electrical power to the panel. The ARMED light on the loadmaster's control panel comes on to indicate that power is being supplied to the control panel. Refer to the ADS Controls and Indicators paragraph for details of the other switch positions.

CARGO DOORS GROUND CONTROL SWITCH. A guarded GROUND CONTROL switch provides power to the AFT DOOR OPERATE switch when placed to "OPR."

CARGO DOORS AFT DOOR OPERATE SWITCH. The AFT DOOR OPERATE lever-lock switch, spring-loaded to "OFF," is used to control the operation of the side and center doors. Placing the switch to "OPEN," and holding it in this position, opens the side and center doors and arms the ramp system. After the doors are fully open the switch is released and it returns to the "OFF" position. Ramp arming is indicated by the RAMP ARMED indicator light coming on. Placing the switch to "CLOSE," after the ramp and pressure door are closed and locked, closes the three doors.

CARGO DOORS RAMP SELECT SWITCH. The RAMP SELECT lever-lock switch is used to select the desired ramp position, activates the RAMP OPERATE switch and the ramp system electrical circuits. Placing the switch to "TRUCK" or "DRIVE-IN" selects the ramp position.

CARGO DOORS RAMP OPERATE SWITCH. The RAMP OPERATE lever-lock switch, spring-loaded to "OFF," is used to extend and retract the aft ramp. Placing and holding the switch to "OPEN" causes the ramp to extend to be even with the cargo floor and the pressure door to retract up to the overhead, or will lower the ramp with the pressure door connected to it

until the ramp is full down. Then the pressure door will lower and become the ramp extension. This ramp actuation is dependent upon the position of the RAMP SELECT switch. The RAMP OPERATE switch is released to the "OFF" position when the aft end of the pressure door is low enough to deploy the toes. Placing the switch to "CLOSE" reverses the above sequence.

CARGO DOORS RAMP ADJUST SWITCH. The RAMP ADJUST lever-lock switch, spring-loaded to "OFF," is used to adjust the ramp to the desired truck-bed height.

A visual indication of the operating status of the aft cargo door and ramp system is provided by three indicator lights on the LH AFT LOADMASTER CONTROL panel (figure 1-121). A visual indication of the status of the aft cargo door and ramp system locks is provided by 12 pushbutton-type indicator lights on the LH AFT LOADMASTER CONTROL panel. Each ramp lock is also equipped with a mechanical lock indicator. When the indicator is extended, the lock is locked. When the indicator is retracted, the lock is unlocked. The following is a description of the indicator lights:

CARGO DOORS ARMED LIGHT. An ARMED light on the LH AFT LOADMASTER CONTROL panel comes on to indicate that the loadmaster's left-hand aft control panel is activated. This action occurs when the panel is activated by the CARGO DOORS AFT arming switch on the copilot's CARGO DOORS arming panel located on the copilot's side console.

CARGO DOORS RAMP ARMED LIGHT. A RAMP ARMED light on the LH AFT LOADMASTER CONTROL panel comes on after the AFT DOORS are fully open. This indicates that the RAMP SELECT and RAMP OPERATE switches are activated.

PRESSURE DOOR UP LIGHT. A PRESSURE DOOR UP light on the LH AFT LOADMASTER CONTROL panel comes on after the aft pressure door is locked in the overhead position for ADS and truck loading operations.

RAMP LOCK STATUS LIGHTS. Two RAMP (LH and RH) NOT LKD lights come on when the ramp locks unlock.

PRESSURE DOOR LOCK STATUS LIGHTS. Four PRESSURE DOOR (LH-OUTBD, LH-INBD; RH-INBD, RH-OUTBD) NOT LKD lights come on when the pressure door lower actuators retract or the pressure door moves from its closed position after the RAMP OPERATE switch is placed in the "OPEN" position.

AFT DOOR LOCK STATUS LIGHTS. Two LH SIDE DOOR (ACTR, MECH) NOT LKD lights, two RH SIDE DOOR (ACTR, MECH) NOT LKD lights, and two CENTER DOOR (LH, RH) NOT LKD lights come on when the doors unlock after the AFT DOOR OPERATE switch is held to the "OPEN" position.

Note

The BYPASS portion of the NOT LKD/BYPASS lights come on when the light assembly is depressed. This action is accomplished when a locking switch malfunctions or is out of rig. The not-locked circuit is bypassed causing the PRESS-DOOR OPEN or UNPRESS-DOOR OPEN lights on the pilot's annunciator panel to go off.

Aft Cargo Door and Ramp System Operation and Sequencing Procedures.

WARNING

Do not operate the aft loading system while a twisting force is being applied to the fuselage about the longitudinal axis of the airplane. A twisting force will exist when the airplane is not symmetrically supported (i.e., one MLG partially or fully kneeled, one MLG strut deflated, or all tires flat on one MLG). Twisting of the fuselage can cause the pressure door to bind, resulting in damage to the door, hinges and seals. Failure to comply with this warning may result in damage to the airplane and injury to personnel.

The following procedures are used for the normal operation and sequencing of the aft cargo doors and ramp system. The airplane must be supplied with necessary electrical, hydraulic and pneumatic power.

OPENING PROCEDURES FOR THE CARGO DOORS:

1. Aft Scanner - IN POSITION

Station a crew member outside the airplane and in direct interphone communications. This crew member will assist in clearing the aft area of the airplane and clearing the APU's. He shall report all operations/movements (i.e., door movement, actuator retraction or extension and/or pad deployment.

2. Pressure Door Side Seals - RETRACTED/CHECKED.

Manaully retract the pressure door lower corner seals by pulling the nylon cords, then manually retract the pressure door side seals and retain them with the retaining handles.

Check the pressure door side seals for damage. If there is visible evidence that the aft pressure door has contacted and damaged either side seal for a length of two inches or more in an area from the hinge mechanism pivot point to 16 inches below the pivot point, the pressure door and ramp must not be operated.

WARNING

Subsequent operation of the pressure door and ramp with the above indicated damage could result in injury to personnel and damage to the airplane.

CAUTION

The pressure door seals must be manually retracted and retained before operating the pressure door and ramp. Failure to do so may damage the seals when the door and ramp are opened or closed.

Note

An arming sequence switch, installed behind each side seal is actuated when the side seals are retracted. Failure to retract the seals will prevent the armed light from coming on and electrical actuation of the arming valve when the Cargo Doors Aft arming switch is placed to GROUND ARM.

3. Cargo Doors Aft Arming Switch - GROUND ARM

Place the Cargo Doors Aft arming switch to GROUND ARM. The armed light on the LH aft loadmaster control panel will come on. This indicates that power is available at the panel.

4. A-Valve Safety Guard - CHECKED INSTALLED

Check that the safety guard is installed on valve A.

5. Door Lock Status Panel Lights - CHECKED

Check that door status not lkd lights are out and the bypass position is not activated.

6. Aft Loading Control Hydraulic Manifold Covers-CLOSED

On 70168, 00452 and up and airplanes modified by T.O. 1262, ensure that the covers on the aft loading control hydraulic manifolds are closed.

7. No. 1 Hydraulic System - PRESSURIZED

8. Ground Control Switch - OPR

Place the Ground Control switch to OPR. Electrical power is not available to the Aft Door Operate switch.

9. Aft Door Operate Switch - CLOSE/OFF

Momentarily closeing the switch will assure that all doors are positively locked and the solenoids closed.

10. Aft Door Operate Switch - OPEN/OFF

Place and hold the Aft Door Operate switch to OPEN. The aft center door will unlock and open and the center door not lkd lights will come on. After the center door is fully open, the side doors will unlock and open and the side door not lkd lights will come on. When the side doors are fully open the ramp armed light will come on, indicating power is available to the Ramp Select switch.

11. Troop Compartment Stair Ladder Adjustable Feet - RETRACTED

TRUCK LOADING RAMP POSITIONING.

The following procedures are used for positioning the ramp and pressure door for truck loading:

1. Side Seals Retracted - CHECKED

Check the pressure door side seals for damage. If there is visible evidence that the aft pressure door has contacted and damaged either side seal for a length of two inches or more in an area from the hinge mechanism pivot point to 16 inches below the pivot point, the pressure door and ramp must not be operated.

WARNING

Subsequent operation of the pressure door and ramp with the above indicated damage could result in injury to personnel and damage to the airplane.

2. Ramp Select Switch - TRUCK

Place the Ramp Select switch to TRUCK. This action sets up electrical circuits for automatic sequencing of the ramp and pressure door for truck loading and energizes the Ramp Operate switch.

WARNING

The position of the Ramp Select switch shall not be changed during the entire opening and closing cycle for the selected mode of operation. Failure to comply could result in injury to personnel or damage to the airplane.

3. Pressure Door Upper Hinge Check - ACCOMPLISHED

a. On 70168 and 00452 and up airplanes modified by T.O. 1262, open the covers on the aft loading control hydraulic manifold.

Note

In the following step, it may be necessary to depress the manual override I valve in addition to the C valve to move the links over-center against the stops.

b. Manual Override C Valve - DEPRESSED/RELEASED

Depress the manual override C valve for a minimum of 3 seconds then release. This will allow sufficient time for the pressure door to lock into its upper hinge lock. (Pressure door RH and LH outboard not lkd lights come on.)

c. Pressure Door Upper Hinges - VISUALLY CHECKED

Check that the upper hinges are selected and links (1) and (2), figure 1-124 are overcenter and against the stop (3).

WARNING

Do not attempt to unlock and lower the ramp or operate the pressure door to its overhead position and do not attempt to lower the pressure door from its overhead position unless the links are on the stop. Failure to comply could cause injury to personnel and damage to the airplane.

d. On 70168 and 00452 and up and airplanes modified by T.O. 1262, close the covers on the aft loading control hydraulic manifold.

4. Ramp Operate Switch - OPEN AND HOLD

WARNING

Do not place the Ramp Operate switch to CLOSE again once pressure door movement has been interrupted. To do so, may cause the pressure door to become unlocked from its upper hinge and fall. If pressure door movement has been interrupted, allow it to close under its own weight. Re-cycle the pressure door to full open and then close the pressure door and ramp without interruption.

CAUTION

A cargo compartment observer shall ensure that both pressure door seals are retracted and locked prior to pressure door or ramp movement. Failure to comply could result in structural damage to the airplane.

a. When the Ramp Operate switch is placed and held in the OPEN position, the following occurs:

(1) The pressure door lower actuators will retract and buttline 28 locks unlock (pressure door LH and RH inboard not lkd lights come on).

(2) The ramp unlocks and the ramp lock mechanical indicators retract (ramp LH and RH not lkd lights come on).

(3) The ramp will move down until it is level with the cargo compartment floor.

(4) The pressure door will rise to its overhead position and will lock in place (pressure door up light comes on and remains on after the Ramp Operate switch is released).

Failure of the pressure door up light to remain on after the Ramp Operate switch is released while in the truck loading mode indicates a malfunction in the upper hinge holding power circuitry or indicates that power has been interrupted. Attempt to reset the holding relay by placing the Ramp Operate switch to OPEN and then back to OFF. If the light does not remain on, the malfunction should be located and corrected before continuing with the cargo door and ramp operation.

CAUTION

Failure to reset the upper hinge holding power circuitry could cause damage to the pressure door and airplane structure upon resumption of cargo door and ramp operation.

(5) First movement of the pressure door to the overhead position de-energizes the aft door operate switch.

5. Ramp Adjust Switch - AS REQUIRED

If the ramp height has to be adjusted to the level of the truck or loader, place the Ramp Adjust switch in the, as applicable, UP or DOWN position until the desired loading height is obtained.

6. Ground Control Switch - COMPL

Placing the Ground Control switch to COMPL deactivates the Ground Cargo Doors switches and completes the truck loading operation. The ramp is hydraulically locked in position.

7. Cargo Doors Aft Arming Switch - SAFE

8. No. 1 Hydraulic System - DEPRESSURIZED

CLOSING PROCEDURES FOR TRUCK LOADING - RAMP AND PRESSURE DOOR.

To close the aft ramp and pressure door from the truck loading position, proceed as follows:

1. Aft Scanner - IN POSITION

Station a crew member outside the airplane and in direct interphone communications. This crew member will assist in clearing the aft area of the airplane and clearing the APU's for starting. He shall report all operations/movements (i.e., door movements, actuator retraction or extension and/or pad deployment).

2. Pressure Door Side Seals - CHECKED RETRACTED

Check that the pressure door side seals are fully retracted.

CAUTION

Before attempting to close the pressure door and ramp, a visual check shall be made to ensure that the pressure door seals are fully retracted, and are locked in place with the retaining handles. Failure to comply could result in damage to the seals if they are not fully retracted when the pressure door and ramp are closed.

Note

An arming sequence switch, installed behind each side seal, is actuated when the side seals are retracted. Failure to retract the seals will prevent the armed light from coming on and electrical actuation of the arming valve when the Aft Cargo Doors arming switch is placed to GROUND ARM.

3. Cargo Doors Aft Arming Switch - GROUND ARM

The armed light on the loadmaster's left aft control panel should be on. This indicates that power is available at the panel.

4. A-valve Safety Guard - CHECKED

Check that the safety guard is installed on valve A.

5. No. 1 Hydraulic System - PRESSURIZED

6. Ground Control Switch - OPR

Place the Ground Control switch to OPR. Electrical power is now available to the Ramp Operate and Ramp Adjust switches. The ramp armed light should come on.

7. Ramp Armed Light On - CHECKED

7A. Ramp Operate Switch - OPEN/OFF (IF REQUIRED)

The absence of the pressure door up light, upon restoration of electrical power to the door and ramp operate circuits with the doors open and the ramp in the truck loading mode, indicates that the upper hinge holding power relay has dropped out. Reset the relay by placing the Ramp Operate switch to OPEN and then back to OFF. The pressure door up light shall come on and remain on.

CAUTION

Failure to reset the upper hinge holding power relay could cause damage to the pressure door and airplane structure upon resumption of cargo door and ramp operation.

7B. Pressure Door Up Light On - CHECKED

8. Ramp Select Switch - CHECKED

Insure Ramp Select switch is in the TRUCK position.

WARNING

The position of the Ramp Select switch shall not be changed during the entire opening and closing cycle for the selected mode of operation. Failure to observe this warning may result in injury to personnel or damage to the airplane.

9. Pressure Door Upper Hinges - VISUALLY CHECKED

Visually check that the pressure door upper hinges are selected and links (1) and (2), figure 1-124, are overcenter and against the stop (3).

WARNING

Do not attempt to lower the pressure door from its overhead position unless the links are on the stop. Failure to comply could cause injury to personnel and damage to the airplane.

10. Troop Compartment Stair Ladder Adjustable Feet - RETRACTED (IF REQUIRED)

Prior to raising the ramp, retract the troop compartment stair ladder adjustable feet if the ladder is down and the feet are extended.

CAUTION

Failure to retract the feet may result in damage to the ladder when the ramp moves up and closes.

11. Ramp Operate Switch - CLOSE AND HOLD

On 68304, 68307, 70167, 70168 and 70170 through 90027 not modified by T.O. 1290E, when the Ramp Operate switch is placed to CLOSE, and after the pressure door starts down, and prior to reaching the closed position, hold the manual override L valve depressed until the ramp is closed and locked.

CAUTION

Hold the manual override L valve depressed until the pressure door and ramp not lkd lights go off. Failure to comply could result in the pressure door striking the ramp and damaging the hinge pins.

When the Ramp Operate switch is placed and held in the CLOSE position, the ramp, if it has been adjusted above the level of the cargo compartment floor, will move until it is level with the cargo compartment floor. (If the ramp moves to the full down position, reposition the ramp to the coplanar position, using the Ramp Adjust switch.)

WARNING

Do not place the Ramp Operate switch to CLOSE again once pressure door movement has been interrupted. To do so, may cause the pressure door to become unlocked from its upper hinge and fall. If pressure door movement has been interrupted, allow it to close under its own weight. Re-cycle the pressure door to full open and then close the pressure door and ramp without interruption.

CAUTION

If an aft ramp logistics rail is in the outboard position, the retractable lip on the rail must be closed to prevent the lip from hitting a longeron when the ramp closes.

(1) The pressure door will pivot and move down to its closed position (pressure door up light goes out).

(2) The ramp will then move to its closed position.

(3) The ramp will lock to the fuselage and the mechanical lock indicators will extend (ramp LH & RH not lkd lights go off).

(4) The pressure door lower actuators extend, the inboard locks lock, and the LH and RH inboard not lkd lights go out. The upper hinge mechanism then unlocks from its overhead position, simultaneously locking the pressure door to the lower hinge. (Pressure door LH & RH outboard not lkd lights go out.)

12. Ramp Select Switch - OFF

This de-energizes the Ramp Operate switch.

Note

If drive-in loading is not to be accomplished at this time, close the aft cargo doors in accordance with the Closing Procedures for the Aft Cargo Doors in this section.

DRIVE-IN LOADING RAMP POSITIONING.

The following procedures are used for positioning the ramp and pressure door for drive-in loading:

CAUTION

A cargo compartment observer shall assure that both pressure door seals are retracted prior to and during pressure door or ramp movement. Failure to comply could result in structural damage to the airplane.

1. Side Seals Retracted - CHECKED

2. Ramp Select Switch - DRIVE IN

WARNING

The position of the Ramp Select switch shall not be changed during the entire opening and closing cycle for the selected mode of operation. Failure to comply could result in injury to personnel and damage to the airplane.

Place the Ramp Select switch to DRIVE IN. This action sets up the electrical circuits for the automatic sequencing of the ramp and pressure door for drive-in loading and energizes the Ramp Operate switch.

3. Ramp Operate Switch - OPEN AND HOLD UNTIL 4 FEET FROM GROUND THEN OFF

CAUTION

Do not release the Ramp Operate switch while the ramp is opening and the ramp is approximately 4 or 5 inches from the full close position. Failure to comply may result in damage to the airplane.

a. When the Ramp Operate switch is placed and held in the OPEN position, the following sequence of operation takes place:

(1) The Aft Door Operate switch becomes de-energized.

(2) The ramp support pads will deploy taking approximately 15 seconds.

(3) The ramp will unlock from the fuselage. The ramp LH and RH not lkd lights will come on and the ramp lock mechanical indicators will retract into their housings.

(4) The ramp will move down with the pressure door attached to it in the vertical position. When the ramp has opened approximately 4 inches, all four pressure door not lkd lights come on. When the ramp reaches its full down position or the support pads contact the ground, the pressure door will pivot on its lower hinges and lower until the Ramp Operate switch is released to OFF.

Stop the pressure door when it is four feet from the ground by releasing the Ramp Operate switch to its OFF position.

WARNING

Do not move the Ground Control switch from OPR to COMPL. To do so, will relieve the pressure door actuator and cause the pressure door to sink to the ground during toe deployment, possibly striking personnel deploying the toes. Make sure that the door has stopped moving and that the ground crew remains clear of the toes line of travel before directing the ground crew to deploy the toes. Failure to comply could result in injury to the ground crew.

WARNING

No weight is allowed on the pressure door while not ground supported. Failure to comply could result in injury to personnel and damage to the airplane.

4. Pressure Door Toes - DEPLOYED

Manually deploy the toes by actuating the manual handle on the left side of the pressure door. Then manually lift and lock each toe in position.

WARNING

Make sure that the door is clear prior to resuming door operations. Failure to comply could result in injury to the ground crew.

5. Ground Control Switch - COMPL

Note

There will be a short delay before the pressure door settles to the ground.

Placing the Ground Control switch to the COMPL position will pressure relieve the pressure door and the aft cargo ramp actuators, permitting the ramp, pressure door and toes to settle to the ground. It will also de-energize the Ramp Select and Ramp Operate switches and will provide a visual indication (by the pressure door settling to the ground) that the A valve has closed, properly removing hydraulic pressure from the pressure door and ramp manifolds.

6. Cargo Doors Aft Arming Switch - SAFE

7. No. 1 Hydraulic System - DEPRESSURIZED

CLOSING PROCEDURES FOR DRIVE-IN LOADING - RAMP AND PRESSURE DOOR.

To close the aft ramp and pressure door from the drive-in loading position, proceed as follows:

1. Aft Scanner - IN POSITION

Station a crew member outside the airplane and in direct interphone communications. This crew member will assist in clearing the aft area of the airplane and clearing the APU's. He shall report all operations/movements (i.e., door movements, actuator retraction or extension and/or pad deployment).

2. Pressure Door Side Seals - CHECKED RETRACTED

Before closing the ramp and pressure door, have an observer check that the pressure door side seals are still retracted.

Also check that the retaining handles are holding the seals in their retracted position.

The side seals must be retracted in order for the seals to actuate an arming sequence switch. If this switch is not actuated, the LH aft loadmaster's control panel will not become armed when the Cargo Doors Aft arming switch is placed to the GROUND ARM position.

CAUTION

If the side seals are not retracted, damage to the seals may occur when the ramp and pressure doors are closed.

3. Troop Compartment Stair Ladder Adjustable Feet - RETRACTED (IF REQUIRED)

Prior to raising the ramp, retract the troop compartment stair ladder adjustable feet if the ladder is down and the feet are extended.

CAUTION

Failure to retract the feet may result in damage to the ladder when the ramp moves up and closes.

4. Cargo Doors Aft Arming Switch - GROUND ARM

The armed light on the LH aft loadmaster's control panel should be on. This indicates that power is available at the panel.

5. Cargo Door Manual Override Valves - CHECKED

Check that the safety guard is installed over the Arm A valve.

6. No. 1 Hydraulic System - PRESSURIZED

7. Ground Control Switch - OPR

Place the Ground Control switch to OPR. Electrical power is now available to the Ramp Operate switch. The ramp armed light should come on.

8. Ramp Armed Light On - CHECKED

9. Ramp Select Switch - CHECKED

Insure Ramp Select switch is in the DRIVE IN position.

WARNING

The position of the Ramp Select switch shall not be changed during the entire opening and closing cycle for the selected mode of operation. Failure to observe this warning may result in injury to personnel or damage to the airplane.

CAUTION

No weight is allowed on the pressure door while not ground supported. Failure to comply could result in injury to personnel and damage to the airplane.

10. Ramp Operate Switch - CLOSE

Place the Ramp Operate switch to CLOSE.

CAUTION

If an aft ramp logistics rail is in the outboard position, the retractable lip on the rail must be closed to prevent the lip from hitting a longeron when the ramp closes.

(1) The pressure door begins to rotate to the vertical position.

CAUTION

Do not release the Ramp Operate switch while the ramp is closing and the ramp is approximately 4 or 5 inches from the full close position. Failure to comply may result in damage to the airplane.

Note

If the pressure door does not move, the ramp may be out of symmetry.

(2) When the pressure door reaches its full vertical position, the ramp will close, and all four pressure door not lkd lights go off.

(3) The ramp support pads will stow taking approximately 15 seconds.

(4) The ramp will lock to the fuselage, the ramp LH and RH not lkd lights will go off and the ramp lock mechanical indicators will extend from their housings.

11. Pressure Door Toes - UNLOCKED

Advise the outside crew member to unlock the pressure door toes as soon as the pressure door starts to rotate.

12. Ramp Operate Switch - RELEASED

Note

If truck loading is not to be accomplished at this time, close the aft cargo doors in accordance with the Closing Procedures for the Aft Cargo Doors.

13. Ramp Select Switch - OFF

CLOSING PROCEDURES FOR THE AFT CARGO DOORS.

1. Aft Door Operate Switch - CLOSE AND HOLD

When the Aft Door Operate switch is placed and held in the CLOSE position, the Ramp Select switch becomes de-energized, when the ramp armed indicator light goes off. The side doors will close first, the side doors LH & RH actuators not lkd lights go off and the center door will move down and forward to its closed position. The side and center doors will then lock into each other. When the side and center cargo doors are closed and locked, the LH & RH side door mech, and the center door LH and RH not lkd indicator lights will go off.

2. Ground Control Switch - COMPL

This de-energizes the Ground Cargo Doors switches.

3. No. 1 Hydraulic System - DEPRESSURIZED

4. Pressure Door Side Seals - EXTENDED

Manually extend the pressure door side seals against the pressure door.

5. Cargo Doors Aft Arm Switch - SAFE

MANUAL OVERRIDE OPERATION - AFT CARGO DOORS.

WARNING

Do not operate the aft loading system while a twisting force is being applied to the fuselage about the longitudinal axis of the airplane. A twisting force will exist when the airplane is not symmetrically supported (i.e., one MLG partially or fully kneeled, one MLG strut deflated, or all tires flat on one MLG). Twisting of the fuselage can cause the pressure door to bind, resulting in damage to the door, hinges and seals. Failure to comply with this warning may result in damage to the airplane and injury to personnel.

CAUTION

Since electrical safety items such as pressure door asymmetry limit switches and electrical interlocks are inoperative, it is mandatory to operate the door in accordance with the sequences given and to heed the cautions contained in the manual operation of the aft cargo doors.

Note

The door lock status lights may be used as an aid in confirming door position.

During manual operation of the aft cargo doors, an observer must be available and be in communication with the operator. This is to assure that the center doors, side doors, and ramp are in the correct position during manual sequencing. The pressure door release valve is closed by the A (arm) override valve pressure.

In the event electrical power is lost or unavailable, but hydraulic power is available, it will be necessary to use the manual override valves to operate the aft cargo doors (figure 1-123).

Note

The A valve has a lockout device that must be removed before operation.

The manual override operation for drive-in, truck loading and ADS is provided by scroll checklist holder mounted next to the hydraulic manifold.

OPENING PROCEDURES FOR CENTER AND SIDE CARGO DOORS.

1. Place the Cargo Doors Aft arming switch on the copilot's cargo doors arming control panel in the SAFE position.

2. On 70168 and 00452 and up and airplanes modified by T.O. 1262, open the covers on both aft loading control hydraulic manifolds.

3. Remove the safety guard from A valve.

4. Unlock and open the center cargo door, depress and hold D then A valves until the outside observer advises that the door is fully open, then release D then A valves.

Note

When the center cargo door unlocks from the side doors, the center door LH and RH not lkd indicator lights on the LH aft loadmasters control panel will come on and will stay on.

5. Unlock and open side cargo doors, depress and hold N then A valves until the outside observer advises that the doors are fully open, then release N and A valves.

Note

When the side cargo doors unlock from the fuselage, the side door LH and RH actr and mech not lkd indicator lights on the LH aft loadmaster's control panel will come on and will stay on.

6. Install the safety guard over A valve.

OPENING PROCEDURES FOR TRUCKLOADING - AFT RAMP AND PRESSURE DOOR.

1. Place the Cargo Doors Aft arming switch on the copilot's cargo doors arming control panel in the SAFE position.

2. Disconnect the electrical connectors on both ramp actuators.

3. Close the relief valves on both ramp actuators, rotate knobs clockwise.

4. Remove the safety guard from A valve.

Note

Additional personnel shall be assigned to visually inspect the pressure door left and right upper hinges for proper selection. These personnel shall also assist as directed by the loadmaster operating the manual override system in operating the manual override buttons and in retracting the pressure door seals.

5. Advise the assigned personnel to manually retract and lock the pressure door seals.

Note

In the following step, it may be necessary to depress the manual override I valve in addition to the C and A valves to move the links overcenter against the stops.

6. Select pressure door upper hinges, depress and hold C then A valves until the assigned personnel have inspected and advised that the links (1) and (2) (figure 1-124) are overcenter and against the stops (3). Release C and A valves.

WARNING

Do not attempt to unlock and lower the ramp unless the pressure door upper hinge links are overcenter and against the stops. Failure to comply could cause injury to personnel and damage to the airplane.

7. Install the pressure door upper hinge lock blocks on each upper hinge to lock the links in the overcenter position (figure 1-124).

If the lock block cannot be installed properly, adjust the ball plunger in or out until the block snaps firmly in place.

8. Depress and hold C and A valves and unlock the pressure door from the ramp, depress and hold J valve until the outside observer advises that the pressure door lower actuators are fully retracted and the inboard and outboard locks are fully unlocked. Continue to hold J, C, and A valves depressed.

Note

When the pressure door is fully unlocked from the ramp, the pressure door LH and RH inbd and outbd not lkd lights on the LH aft loadmaster's control panel will come on and stay on.

9. Still holding J, C, and A valves depressed, unlock the ramp from the fuselage, depress and hold G valve. Visually check that all ramp locks are unlocked. Release G valve only.

Note

When the ramp unlocks from the fuselage, the ramp lock mechanical indicators will be retracted into their housings and the ramp LH and RH not lkd lights on the LH aft loadmaster's control panel will come on and stay on.

10. Still holding J, C, and A valves depressed, lower the ramp, depress and hold F valve until the ramp is coplanar with the cargo compartment floor then release F valve only.

11. Install the safety guard over F valve.

12. Still holding J, C, and A valves depressed advise the assigned personnel to check that the pressure door left and right upper hinge links are overcenter and against the stops.

WARNING

Do not attempt to move the pressure door to its overhead position unless the pressure door upper hinge links (1) and (2), (figure 1-124) are overcenter and against the stops (3). Failure to comply could result in injury to personnel and damage to the airplane.

WARNING

Make sure all personnel are clear of the pressure door before attempting to raise it to its overhead position. Failure to comply could result in injury to personnel.

13. Still holding J, C, and A valves depressed, open the pressure door to its overhead position, depress and hold K valve.

WARNING

If the pressure door opening operation is interrupted, allow it to close under its own weight. Then recycle the door to its full open position without interruption.

14. Still holding J, C, and A valves depressed, release K valve only, then observe that the pressure door remains in its overhead position.

15. Release J, C, then A valves.

16. Install the safety guard over A valve.

17. Reconnect the electrical connectors on both ramp actuators.

CLOSING PROCEDURE FOR TRUCKLOADING - AFT RAMP AND PRESSURE DOOR.

1. Place the Cargo Doors Aft arming switch on the copilot's cargo doors arming control panel in the SAFE position.

2. Disconnect the electrical connectors on both ramp actuators.

3. Close the relief valves on both ramp actuators, rotate knobs clockwise.

Note

Additional personnel shall be assigned to visually check the pressure door left and right upper hinge links for proper selection. These personnel shall also assist, as directed by the loadmaster operating the manual override system, in operating the manual override valve buttons, and in checking the pressure door seals are fully retracted before closing the pressure door and extending the seals after the door is fully closed.

4. Advise the assigned personnel to check that the pressure door seals are fully retracted.

5. Remove the safety guard from A valve.

6. Advise the assigned personnel to check that the pressure door left and right upper hinge links are overcenter, against the stops, and lock blocks are installed.

WARNING

Do not attempt to move the pressure door from its overhead position unless the pressure door upper hinge links (1) and (2) (figure 1-124) are overcenter and against the stops (3). Failure to comply could result in injury to personnel and damage to the airplane.

WARNING

Make sure all personnel are clear of the pressure door before attempting to close it. Failure to comply could result in injury to personnel.

7. Close the pressure door, depress and hold J, C, L, then A valves.

WARNING

If the pressure door closing operation is interrupted, allow the door to close under its own weight. Then recycle the door to its full open position, then close it without interruption.

8. Still holding J, C, L, and A valves depressed, close the ramp, depress and hold G valve.

9. Still holding J, C, L, G, and A valves depressed, lock the ramp to the fuselage, depress and hold H valve. Visually check that all the ramp locks are properly locked, then release G valve only.

Note

When the ramp locks to the fuselage, the ramp lock mechanical indicators will be extended from their housings and the ramp LH and RH not lkd lights on the LH aft loadmaster's control panel will go off and stay off.

10. Release all override valves.

11. Depress and hold C valve, extend the pressure door lower actuators, depress and hold I then A valves until the outside observer advises that the actuators are fully extended and the inboard locks are locked.

12. Release all override valves.

13. Remove both pressure door upper hinge lock blocks.

CAUTION

Ensure that both pressure door hinge lock blocks are removed. Severe structural damage could occur if an attempt is made to go to the drive-in mode or if the airplane is pressurized.

14. Depress and hold I, B, and A valves until the pressure door is locked to the ramp and the outside observer advises that the door is locked to the ramp.

Note

When the pressure door and ramp are properly locked, and electrical power is available, the pressure door and ramp not lkd lights on the LH aft loadmaster's control panel will go off and will stay off.

15. Release B, I, and A valves.

16. Install the safety guard over A valve.

17. Remove the safety guard from F valve and stow.

18. Open the relief valves on both ramp actuators, rotate knobs counterclockwise.

19. Reconnect the electrical connectors on both ramp actuators.

20. Advise the assigned personnel to extend the pressure door seals.

Note

The side and center cargo doors should be closed at this time if drive in loading operations are not to be accomplished. Refer to Closing Procedures for Side and Center Cargo Doors in this Section.

OPENING PROCEDURES FOR DRIVE-IN LOADING - AFT RAMP AND PRESSURE DOOR.

1. Place the Cargo Doors Aft arming switch on the copilot's cargo doors arming control panel in the SAFE position.

2. Manually deploy the ramp ground support pads.

Note

Two people are required to deploy the ramp ground support pads. One to manually support the pad while the other removes the necessary hardware.

a. Manually support the weight of the pad.

b. Remove the cotter pin, nut, and bolt connecting the actuator to link; retain the hardware for reassembly.

c. Lower the pad to the deployed position.

3. Disconnect the electrical connectors on both ramp actuators.

4. Close the relief valves on both ramp actuators, rotate knobs clockwise.

5. Remove the safety guard from A valve.

Note

Additional personnel shall be assigned to assist, as directed by the loadmaster operating the manual override system, in operating the manual override buttons. They shall also retract the pressure door seals.

6. Advise the assigned crew member to retract and lock the pressure door seals.

7. Unlock the ramp from the fuselage, depress and hold I, B, G, then A valves. Visually check that all ramp locks are unlocked. Then release G valve only.

Note

When the ramp unlocks from the fuselage, the ramp lock mechanical indicators will be retracted into their housings and the ramp LH and RH not lkd lights will come on and stay on.

8. Still holding I, B, and A valves depressed, lower the ramp, depress and hold F valve until the ramp reaches its drive-in position, then release F then I and B valves only.

WARNING

Check with the outside observer to make sure the immediate area of the pressure door is clear of personnel. Failure to comply could cause injury to personnel.

9. Still holding A valve depressed, lower the pressure door to a convenient height for toe deployment, depress and hold J valve. Release J valve when the door is at a convenient height.

WARNING

No weight is allowed on the pressure door when it is in its partially lowered position. Failure to comply could result in injury to personnel and damage to the door.

10. Still holding A valve depressed, advise the outside personnel to deploy the toes.

11. Release A valve to allow the pressure door to relieve to the ground.

12. Install the safety guard over A valve.

13. Open the relief valves on both ramp actuators, rotate knobs counterclockwise.

14. Reconnect the electrical connectors on both ramp actuators.

CLOSING PROCEDURES FOR DRIVE-IN LOADING - AFT RAMP AND PRESSURE DOOR.

1. Place the Cargo Doors Aft arming switch on the copilot's cargo doors arming control panel in the SAFE position.

2. Disconnect the electrical connectors on both ramp actuators.

3. Close the relief valves on both ramp actuators, rotate knobs clockwise.

WARNING

Make sure all personnel are clear of the pressure door before attempting to close it. Failure to comply could result in injury to personnel.

Note

Additional personnel shall be assigned to assist, as directed by the loadmaster operating the manual override system, in operating the manual override buttons. They shall also check that the pressure door seals are retracted before closing the door, and shall extend the seals after the door is closed.

4. Advise the assigned personnel to check that the pressure door seals are fully retracted.

5. Remove the safety guard from A valve.

6. Raise the pressure door, depress and hold L, B, I, then A valves, and advise the outside observer to unlock the toes as the door starts to rise.

7. Continue to hold L, B, I, and A valves depressed until the pressure door is fully raised (toes will automatically stow and lock when the ramp closes and locks).

8. Still holding L, B, I, and A valves depressed, close the ramp, depress and hold G valve.

9. Still holding L, B, I, G and A valves depressed, lock the ramp to the fuselage, depress and hold H valve. Visually check that all ramp locks are properly locked.

Note

When the ramp locks to the fuselage, the ramp lock mechanical indicators will be extended from their housings and the ramp LH and RH not lkd lights on the LH aft loadmaster control panel will go off and stay off.

10. Release G, H, L, B, I and A valves in that sequence.

11. As applicable, advise the ground crew or outside personnel to manually stow the ground support pads.

Note

Two people are required to manually stow the ramp ground support pads. One to rotate each pad to the stowed position and the other to install the hardware to connect the actuator to the link.

a. Rotate the pad to its stowed position.

b. While the pad is supported, align the hole in the link and actuator rod-end, then install and tighten the connecting bolt, washer, and nut, and install a new cotter pin.

12. Install the safety guard over A valve.

13. Open the relief valves on both ramp actuators, rotate knobs counterclockwise.

14. Reconnect the electrical connectors on both ramp actuators.

15. Advise the assigned personnel to extend the pressure door seals.

CLOSING PROCEDURES FOR SIDE AND CENTER CARGO DOORS.

1. Place the Cargo Doors Aft arming switch on the copilot's cargo doors arming control panel in the SAFE position.

2. Remove the safety guard from A valve.

3. Close the side cargo doors, depress and hold M and A valves until the outside observer advises that the doors are fully closed.

4. Still holding M and A valves depressed, close center cargo door, depress and hold E valve until the outside observer advises that the door is fully closed. Continue to hold M, E, and A valves depressed.

5. Still holding M, E, and A valves depressed, lock the center and side cargo doors, depress and hold H valve until the doors are heard to lock and the indicator lights go off.

Note

When the side and center doors lock together, the center door LH and RH and the LH side door and RH side door actr and mech not lkd lights on the LH aft loadmaster's control panel will go off and stay off.

6. Release M then E valves.

7. Release H then A valves.

8. Install the safety guard over A valve.

9. On 70168 and 00452 and up and airplanes modified by T.O. 1262, close the covers on both aft loading control hydraulic manifolds.

ADS - PREPARATION - PRESSURE DOOR OPEN.

Note

Four crew members are required for inflight operation of the aft doors and ramp using manual override valves.

Note

The door lock status lights may be used as an aid in confirming door position.

CAUTION

Ensure that the Cargo Doors Aft arming switch on the copilot's cargo doors arming control panel is in the SAFE position.

1. Airplane depressurized.

Confirm full open position of outflow valves.

2. Disconnect the electrical connectors on both ramp actuators.

3. Close the relief valves on both ramp actuators, rotate knobs clockwise.

4. Manually retract and lock the pressure door side seals.

5. On 70168 and 00452 and up and airplanes modified by T.O. 1262, open the covers on both aft loading control hydraulic manifolds.

6. Remove the safety guard from A valve.

Note

In the following step, it may be necessary to depress the manual override I valve in addition to the C and A valves to move the links overcenter against the stops.

7. Select the pressure door upper hinges. Depress and hold C valve then A valve until the upper hinges lock and the lower hinges unlock. Release C and A valves.

8. Visually check that the pressure door left and right upper hinge locks are over center and against the stops.

WARNING

Do not attempt to move the pressure door to its overhead position unless the pressure door upper hinge links (1) and (2) (figure 1-124) are over center and against the stops (3). Failure to comply could result in injury to personnel and damage to the airplane.

9. Install the pressure door hinge lock blocks at both upper hinge locations (figure 1-124).

If the lock block cannot be installed properly, adjust the ball plunger in or out until the block snaps firmly in place.

10. Unlock the pressure door from the ramp. Depress and hold J, C and A valves until the pressure door lower actuators and BL 28 lock actuators are fully retracted (approximately one minute). Continue holding J, C, and A valves depressed.

11. Visually check that BL 28 locks and BL 84 locks are unlocked. Viewing through the flapper doors in the pressure door bottom seal, check that the parts of the locks that are painted red are not in view.

12. Still holding J, C, and A valves depressed, unlock the ramp from the fuselage. Depress and hold G valve until the ramp lock mechanical indicators are retracted. Release G valve only.

13. Still holding J, C, and A valves depressed, lower the ramp 3 inches. Depress and hold F valve until the ramp lowers at least 3 inches, then release F valve.

14. Install the safety guard over F valve.

Note

When the pressure door is being constantly monitored, as in continuous operation, the manual override safety guard need not be installed.

15. Still holding J, C, and A valves depressed, open the pressure door to its overhead position. Depress and hold K valve until the pressure door is securely locked in both uplocks, then release K valve.

WARNING

If the pressure door opening operation is interrupted, allow it to close under its own weight. Then recycle the door to its full open position without interruption.

16. Still holding J, C, and A valves depressed, close the ramp. Depress and hold G valve.

17. Still holding J, C, G, and A valves depressed, lock the ramp to the fuselage. Depress and hold H valve. Check that the ramp lock mechanical indicators extend.

18. Release G valve, then release all remaining valves.

19. Install the safety guard over A valve.

Note

When the pressure door is being constantly monitored, as in continuous operation, the manual override safety guard need not be installed.

ADS-OPENING FOR DROP SEQUENCE.

1. Remove the safety guard from A valve and F valve.

2. Unlock and open the center door. Depress and hold D and A valves until the center door is fully open, then release D and A valves.

3. Unlock the ramp. Depress and hold J, C, G, and A valves. Visually check that the ramp lock mechanical indicators are retracted into their housings, then release G valve only.

4. Still holding J, C, and A valves depressed, lower the ramp against the ADS links. Depress and hold F valve until the ramp actuators stall out.

Note

Ensure that the ADS links are installed before opening the ramp. If the links are not installed, the ramp will extend below the coplanar position.

ADS-CLOSING

1. Remove the safety guard from A valve.

2. Close the ramp. Depress and hold J, C, G, and A valves until the ramp raises to the closed position.

3. Still holding J, C, G, and A valves depressed, lock the ramp to the fuselage. Depress and hold H valve. Visually check that the ramp lock mechanical indicators extend from their housings. Release G valve, then release all other manual override valves.

4. Close center door. Depress and hold E and A valves.

5. Still holding E and A valves depressed, lock the center door to the side doors. Depress H valve. Release all manual override valves.

6. Visually check that the pressure door left and right upper hinge locks are over center against the stops, and lock blocks are installed.

7. Unlock the ramp. Depress and hold J, C, G, and A valves. Visually check that the ramp lock mechanical indicators retract into their housings. Release G valve only.

8. Still holding J, C, and A valves depressed, open the ramp 3 inches. Depress F valve until the ramp has lowered at least 3 inches. Release F valve only.

9. Install the safety guard over F valve.

10. Still holding J, C, and A valves depressed, close the pressure door. Depress and hold L valve.

11. Still holding J, C, L, and A valves depressed, close the ramp. Depress and hold G valve.

12. Still holding J, C, L, G, and A valves depressed, lock the ramp to the fuselage. Depress H valve. Visually check that the ramp lock mechanical indicators extend from their housings. Release G valve, then release J, L, and H valves.

13. Still holding C and A valves depressed, extend the pressure door lower actuators. Depress I valve until BL 28 locks lock (approximately one minute). Release C, I, and A valves.

14. Remove the pressure door left and right upper hinge lock blocks.

15. Unlock the pressure door upper hinges and lock the pressure door to the ramp. Depress I, B and A valves. Release all manual override valves.

16. Install the safety guard over A valve.

17. Remove the safety guard from F valve and stow.

18. On 70168 and 00452 and up and airplanes modified by T.O. 1262, close the covers on both aft loading control hydraulic manifolds.

19. Manually extend the pressure door side seals.

20. Open the relief valves on both ramp actuators, rotate knobs counterclockwise.

21. Reconnect the electrical connectors on both ramp actuators.

JETTISON - EMERGENCY DOOR OPENING.

Note

Four crew members are required for in-flight operation of the aft doors and ramp using manual override valves.

Note

The door lock status lights may be used as an aid in confirming door position.

CAUTION

Ensure that the Cargo Doors Aft arming switch on the copilot's cargo doors arming control panel is in the SAFE position.

1. Airplane depressurized.

Confirm full open position of outflow valves.

2. Disconnect the electrical connectors on both ramp actuators.

3. Close the relief valves on both ramp actuators, rotate knobs clockwise.

4. Manually retract and lock the pressure door side seals.

5. On 70168 and 00452 and up and airplanes modified by T.O. 1262, open the covers on both aft loading control hydraulic manifolds.

6. Remove the safety guard from A valve.

Note

In the following step, it may be necessary to depress the manual override I valve in addition to the C and A valves to move the links over center against the stops.

7. Select the pressure door upper hinges. Depress and hold C valve then A valve until the upper hinges lock and the lower hinges unlock. Release C and A valves.

8. Visually check that the pressure door left and right upper hinge locks are over center and against the stops.

WARNING

Do not attempt to move the pressure door to its overhead position unless the pressure door upper hinge links (1 and 2, figure 1-124) are over center and against the stops (3). Failure to comply could result in injury to personnel and damage to the airplane.

9. Install the pressure door hinge lock blocks at both upper hinge locations (figure 1-124).

If the lock block cannot be installed properly, adjust the ball plunger in or out until the block snaps firmly in place.

10. Unlock the pressure door from the ramp. Depress and hold J, C, and A valves until the pressure door lower actuators and BL 28 lock actuators are fully retracted (approximately one minute). Continue holding J, C, and A valves depressed.

11. Visually check that BL 28 locks and BL 84 locks are unlocked. Viewing through the flapper doors in the pressure door bottom seal, check that the parts of the locks that are painted red are not in view.

12. Still holding J, C, and A valves depressed, unlock the ramp from the fuselage. Depress and hold G valve until the ramp lock mechanical indicators retract. Release G valve only.

13. Still holding J, C, and A valves depressed, open the ramp 3 inches. Depress and hold F valve until the ramp lowers at least 3 inches, then release F valve only.

14. Still holding J, C, and A valves depressed, raise the pressure door to the overhead position.

Depress and hold K valve until the pressure door is locked into the uplocks, then release K valve. Release J, C, and A valves.

15. Unlock and open the center door. Depress and hold D and A valves until the center door is fully open, then release D and A valves.

16. Open the ramp. Depress and hold J, C, A, and F valves until the ramp is level with the cargo floor, then release F valve. Release J, C, and A valves.

17. Install the safety guards over F valve and A valve.

JETTISON - EMERGENCY DOOR CLOSING.

1. Check that the pressure door side seals are fully retracted.

2. Remove the safety guard from A valve.

3. Close the ramp. Depress and hold J, C, G, and A valves until the ramp raises to the closed position.

4. Still holding J, C, G, and A valves depressed, lock the ramp to the fuselage. Depress and hold H valve. Visually check that the ramp lock mechanical indicators extend from their housing. Release G valve, then release all other manual override valves.

5. Close center door. Depress and hold E and A valves.

6. Still holding E and A valves depressed, lock the center door to the side doors. Depress H valve. Release all manual override valves.

7. Visually check that the pressure door left and right upper hinge locks are over center, against the stops, and lock blocks are installed.

8. Unlock the ramp. Depress and hold J, C, G, and A valves. Visually check that the ramp lock mechanical indicators retract into their housings. Release G valve only.

9. Still holding J, C, and A valves depressed, open the ramp 3 inches. Remove the safety guard from F valve and depress F valve until the ramp has lowered at least 3 inches. Release F valve only.

10. Install the safety guard over F valve.

11. Still holding J, C, and A valves depressed, close the pressure door. Depress and hold L valve.

12. Still holding J, C, L, and A valves depressed, close the ramp. Depress and hold G valve.

13. Still holding J, C, L, G, and A valves depressed, lock the ramp to the fuselage. Depress H valve. Visually check that the ramp lock mechanical indicators extend from their housing. Release G valve, then release J, L, and H valves.

14. Still holding C and A valves depressed, extend the pressure door lower actuators. Depress I valve until BL 28 locks lock (approximately 1 minute). Release C, I, and A valves.

15. Remove the pressure door left and right upper hinge lock blocks.

16. Unlock the pressure door upper hinges and lock the pressure door to the ramp. Depress I, B, and A valves. Release all manual override valves.

17. Install the safety guard over A valve.

18. Remove the safety guard from F valve and stow.

19. On 70168 and 00452 and up and airplanes modified by T.O. 1262, close the covers on both aft loading control hydraulic manifolds.

20. Manually extend the pressure door side seals.

21. Open the relief valves on both ramp actuators, rotate knobs counterclockwise.

22. Reconnect electrical connectors on both ramp actuators.

ELECTRICAL FAILURE DURING NORMAL OPERATION OF THE AFT CARGO DOORS AND RAMP.

If an electrical failure occurs during normal operation and sequencing of the aft cargo doors and ramp system, the doors and ramp may be operated using manual override procedures while complying with the following precautions.

1. If the pressure door is in transit to or from the overhead position, allow it to close under its own weight and close and lock the ramp to the fuselage after the pressure door closes.

2. If the pressure door upper hinge is selected, visually check that the hinge locks are over center and against the stops.

3. If the pressure door upper hinge is selected, install the pressure door hinge lock blocks on both upper hinges prior to moving the pressure door.

4. Using the appropriate manual override procedures, continue the opening/closing operation.

CARGO LOADING EQUIPMENT.

Cargo loading is accomplished through hydraulically opened visor, aft side and center doors, and forward and aft loading ramps. Miscellaneous equipment for loading and securing vehicles and palletized cargo and troop seats is stowed in the cargo compartment.

TIEDOWN LOCATIONS AND RINGS.

The cargo compartment floor contains a grid pattern of 304 tiedown locations that is designed for maximum flexibility of cargo restraint compatible with the floor substructure construction. Seven rows of cargo tiedown rings are provided in the floor and ramps. These tiedown rings are capable of withstanding a 25,000 pound limit load within the hemisphere above the floor. The rings are designed to receive either one hook of a 25,000 pound MB-2 tiedown device or two hooks of 10,000 pound MB-1 tiedown devices. The tiedown rings are mounted in recessed pans installed in the cargo floor panels and are bolted directly to the underfloor bulkhead caps.

TIEDOWN DEVICES.

Seventy-five 10,000-pound MB-1 tiedown devices and seventy-five 25,000-pound MB-2 tiedown devices are stowed in the airplane as loose equipment. Each device is used in conjunction with a compatible capacity chain.

TIEDOWN CHAINS.

The tiedown chains provided with the airplane are used in conjunction with the compatible capacity devices.

RESTRAINT RAILS.

Two sets of logistic restraint rails are installed symmetrically about the airplane centerline to accommodate two rows of standard pallets with the 108-inch pallet dimension of each row located across the cargo floor width. The inboard rails are hinged to the floor structure and fold down so that a flush floor surface results when rails are not in use. The outboard rails, installed along the edges of the cargo floor, form a part of the basic airframe structure except across the aft personnel door openings. Removable rail sections, attached with quick release pins, allow the rails to be removed from the door areas.

The horizontal lips at the forward end of the forward ramp, the forward and aft ends of the cargo floor and the aft end of the aft ramp are retractable, to accommodate the tipping of pallets when transversing the teeter rollers from an uneven surface.

The rails on the forward ramp extension and aft ramp provide for lateral repositioning of misaligned pallets. The converging rails form a funnel to guide the pallets into alignment with the rails on the ramps and cargo floor.

Pallets and platforms can be loaded into either end of the airplane, passed completely through the cargo compartment and unloaded at the opposite end. ADS modular platforms may be loaded into the logistic rail system for transport.

Most of the components of the restraint rail system are interchangeable or replaceable to allow rapid installation or replacement.

PALLET RESTRAINT DEVICES.

Longitudinal restraint of pallets is accomplished by simple lock/unlock devices on both the inboard and outboard restraint rails. These devices are located on 80-inch centers, maximum, to assure that one detent is always engaged in each side of any pallet regardless of position. Longitudinal restraint on both sides of the pallet prevents cocking and possible damage to the system. The detent spacing allows pallets to be placed at any fore and aft location on the cargo floor in increments of ten inches. If a pallet is located between two detents, both are closed to assure restraint in both longitudinal directions by entrapment of the pallet. The inboard and outboard detents provide restraint at load factors of 3.0g. forward and 1.5g. aft.

ROLLER CONVEYORS.

Four rows of logistic roller conveyors are located within each set of logistic restraint rails and are invertible so that a flush floor surface results when the rollers are not used. The conveyors are designed to support 463L pallets having a uniformly distributed gross weight of 10,354 pounds.

Primary rollers are located on the forward ramp, cargo floor, and a portion of the aft ramp. These rollers are spaced approximately 5.3 inches center-to-center. Heavy duty primary type teeter rollers are located on the forward and aft ends of the forward ramp, the forward and aft ends of the cargo floor and the forward end of the aft ramp. These teeter rollers support the pallet under the loads encountered as it traverses the adjacent surfaces that are not coplanar. Omni-directional rollers that are located on the forward ramp extension and the aft 95 inches of the aft ramp, allow lateral repositioning of misaligned pallets during cargo handling operations. These rollers are spaced on approximately 8.5 inch centers and are designed to withstand the same loads as the teeter rollers.

CARGO WINCH

An electrically operated, two-speed cargo winch is provided for cargo loading operations. The winch is installed either in the forward or aft ramp in a compartment below the floor surface. All structural and electrical provisions are incorporated into these compartments. Mobility rollers and handles are provided on the winch to allow easy movement of the winch. The winch receives 28-volt DC power from the No. 2 main DC bus (figure 1-67), and 115-VAC power from the monitor AC bus No. 2 and 3 (figure 1-69).

Cargo Winch Controls.

On airplanes modified by T.O. 1305, the cargo winch is controlled by a CARGO WINCH CONTROL panel and a remote winch control grip assembly (figure 1-85). The controls on the panel are described as follows:

CARGO WINCH CONTROL SELECT SWITCH. The three-position CARGO WINCH CONTROL SELECT switch is used to provide electrical power to the forward or aft winch compartment. Placing the switch to "FWD" provides electrical power to the forward compartment. Placing the switch to "AFT" provides electrical power to the aft compartment. The "OFF" position removes control power from both compartments.

CARGO WINCH CONTROL MODE SWITCH. The two-position CARGO WINCH CONTROL MODE switch is used to select the winch speed and the remote control grip assembly. Placing the switch to "FAST" sets up the winch for fast speed. Placing the switch to "SLOW OR REMOTE" sets up the winch for slow speed or for remote operation.

CARGO WINCH CONTROL OPERATE SWITCH. The momentary, three-position (center OFF) CARGO WINCH CONTROL OPERATE switch is used to operate the winch. Placing and holding the switch to "UNWIND" or "WIND" operates the winch, provided the CARGO WINCH CONTROL SELECT switch is in the proper position for the locations of the winch.

To provide remote winch control, a remote winch control grip assembly and its 85-foot extension cord is stowed in a stowage shroud (figure 1-85). A plug-in receptacle is provided to the right of the stowage shroud. A plug-in receptacle is also provided on the opposite side of the cargo compartment.

REMOTE CARGO WINCH CONTROL MODE SWITCH. The two-position remote cargo winch control mode switch on the remote winch control grip assembly (figure 1-85) is used to select the winch speed. Placing the switch to "FAST" or "SLOW" selects the desired winch speed.

REMOTE CARGO WINCH CONTROL UNWIND/WIND SWITCH. The three-position, UNWIND/WIND switch (figure 1-85) is used to select the unwind or wind function of the winch. When the CARGO WINCH CONTROL panel is set up properly and the UNWIND/WIND switch is placed from "OFF" to "UNWIND" or "WIND," the winch will operate when the trigger switch is pulled.

REMOTE CARGO WINCH CONTROL OPERATE SWITCH. The trigger-type remote cargo winch control OPERATE switch (figure 1-85) is used to operate the winch when the CARGO WINCH CONTROL panel and the other switches on the grip assembly are set up properly.

On airplanes not modified by T.O. 1305, the cargo winch is controlled by a remote winch control and intercom unit (figures 1-84 and 1-85) that provides winch control, interphone and public address functions. Each of these functions may be operated separately or simultaneously in any combination. An 85-foot extension cord is furnished on a retractor that can automatically retract the cord to the desired length. A clip on the cord may be used to attach the remote unit plug to the operator's belt.

WINCH SELECT SWITCHES. Four, three-position, lever-lock WINCH SELECT switches are located on the right forward and right aft interphone receptacle panels (figure 1-85) and on the left forward and right aft loadmaster's control panels (figure 1-122). Placing the switch to "FWD" or "AFT" transfers the winch control signals between the forward and aft winch ramp compartments. The four switches are left in the "OFF" position except for the one being used.

REMOTE WINCH CONTROL WIND/UNWIND PUSHBUTTONS. A WIND pushbutton and an UNWIND pushbutton are used to operate the winch. Depressing the WIND pushbutton provides slow speed winding operation. Depressing the UNWIND pushbutton provides slow speed unwinding operation.

REMOTE WINCH CONTROL HIGHSPEED PUSHBUTTON. The HIGHSPEED pushbutton is depressed before the WIND or UNWIND pushbutton is depressed to provide highspeed winding or unwinding operation.

Cargo Winch Operation.

On airplanes modified by T.O. 1305, cargo winch operation from the Cargo Winch Control panel is accomplished as follows:

1. Cargo Winch Control Select Switch - AS REQUIRED

2. Cargo Winch Control Mode Switch - AS REQUIRED

3. Cargo Winch Control Operate Switch - AS REQUIRED

If a change in operating speed is desired, release the Operate switch, change the position of the Mode switch and then actuate the Operate switch again.

Cargo winch operation with the remote winch control grip assembly is accomplished as follows:

1. Cargo Winch Control Select Switch - AS REQUIRED

2. Cargo Winch Control Mode Switch - SLOW OR REMOTE

3. Remote Cargo Winch Control Mode Switch - AS REQUIRED

4. Remote Cargo Winch Control Unwind/Wind Switch - AS REQUIRED

5. Remote Cargo Winch Control Operate Switch - ACTUATED WHEN REQUIRED

Note

The cargo Winch Control Select switch may be placed to OFF to deactivate the winch in the event of a remote control malfunction.

On airplanes not modified by T.O. 1305, cargo winch operation with the remote winch control is accom - plished as follows:

1. Winch Select Switch - AS REQUIRED

Place the appropriate Winch Select switch to the required cargo compartment location (FWD or AFT).

2. Remote Winch Control Wind or Unwind Pushbutton - DEPRESSED

Depress the Wind or Unwind pushbutton. The winch will start winding or unwinding at a slow speed. To increase the winding or unwinding speed, release the Wind or Unwind pushbutton, depress and hold the High Speed pushbutton and then depress the Wind or Unwind pushbutton.

Note

If winch operation does not occur when the Wind or Unwind pushbutton is depressed, check that the other three Winch Select switches are in the OFF position.

SNATCH BLOCKS.

Three snatch blocks are provided as loose equipment. They are attached to any of the tiedown rings to change direction of the winch cable as necessary.

CARGO PALLET STOPS.

Four cargo pallet stops are provided as loose equipment. They are attached to cargo floor tiedown rings during cargo handling operations to prevent winched or pushed pallets from overrunning the cargo floor and rolling, uncontrolled, out of the airplane. They are also used to stop pallets at any desired position on the cargo floor to allow space for vehicles and bulk cargo. The stops are used in pairs to prevent pallet cocking so as to avoid possible damage to the rails and mechanisms. The stops are installed over a tiedown ring by moving the spring-loaded handle. When the handle is released, a pin automatically engages the tiedown ring. The stops are also compatible with the ADS modular platforms whether loaded into the logistics or ADS rails.

STABILIZER STRUTS.

On 68307, 70167, 70168 and 70170 through 90011 not modified by T.O. 840, refer to Sections II and III of T.O. 1C-5A-9, Loading Instructions, for information and operating instructions for the stabilizer struts.

On 90012 and up and airplanes modified by T.O. 840, the stabilizer struts are not installed in the airplane. Provisions are available for stowage of the stabilizer struts whenever their use is essential on a mission.

LOADING INSTRUCTIONS.

For detailed information concerning cargo loading, tiedown, and aerial delivery instructions, see Section II of T.O. 1C-5A-9, Loading Instructions.

TROOP CARRYING EQUIPMENT.

The airplane can be configured to carry personnel as an emergency air transport. All, or part, of three separate compartments can be utilized as required by the mission. The flight station and relief crew compartment will accomodate 20 personnel, including the flight crew. The troop compartment will carry 73 troops and two loadmasters. The cargo compartment has the capability of accommodating 270 personnel on palletized seats.

For full details on troop seats and arrangements, refer to T.O. 1C-5A-9, Loading Instructions.

CARGO COMPARTMENT PALLETIZED SEATING KIT.

A palletized seating kit (figure 1-125) may be installed on logistic rails to accommodate 270 seats on 27 ten-seat pallets. This configuration includes buffet and lavatory facilities. Refer to Section X of T.O. 1C-5A-2-2, Airframe, for installation procedures.

PARATROOP EQUIPMENT.

Paratroop-carrying provisions for equipping the airplane for a paradrop mission are contained in a separate paratroop special mission kit. The kit provides the equipment necessary for a paradrop mission involving combat ready paratroopers. Provisions contained in this kit will allow simultaneous exit from both troop doors. This kit includes electrically actuated air deflector assemblies, jump platforms, anchor cables, paratroop retrieval winches, retriever bars, and safety fences. All necessary provisions for installation of the kit are included in the airplane. These provisions consists of structural and electrical installations to accommodate the retrieval winches, the paratroop signal lights, the jump platform lights, the air deflectors, the anchor cables, the jump platforms, the retriever bars, and the safety fences.

TROOP DOORS.

A troop door is located on each side of the aft section of the cargo compartment. The doors are raised manually and held open by a spring-loaded latch. When the paratroop kit is installed, each of the exits is equipped with an air deflector assembly and a jump platform.

Troop Door Operation.

WARNING

Keep fingers clear of the folding walkway release mechanism after unlocking. Failure to comply could result in injury to the fingers as the walkway moves to its stowed position.

WARNING

Keep head and body out of path of door opening lever when unlocking door control handle. The door opening lever will rotate inboard and down in 2 quick 8-inch arc when the door is unlocked. Failure to comply could result in injury to personnel.

Note

As the door is unlocked, the PARATROOP DOOR LH and RH NOT LKD indicator lights on the LH aft loadmaster's control panel will come on and will stay on until the doors are closed and locked.

1. Unlock the door by turning the door control handle in a counterclockwise direction.

2. Pull down on the door opening lever.

3. Hold the door opening lever and the assist handle (at the bottom of the door) and pull inboard and up to slide the door on its tracks to the overhead position.

4. Make sure the door is held in its up (open) position by the spring loaded latch at the top of the door frame before releasing toe door handle.

Note

When the door is closed and the door control handle is turned to the locked position, the applicable PARATROOP DOOR NOT LKD indicator light on the LH aft loadmaster's control panel will go off.

5. To close the door, hold the handle at the bottom of the door and push the spring-loaded latch allowing the door to slide gradually to its closed position. Push the door opening lever up, then lock the door by turning the door control handle in a clockwise direction to the locked position.

ANCHOR CABLES.

Two paratroop anchor cables are provided in the kit and are installed down each side of the cargo compartment, and are supported at each end by tripods. The tripods consist of an "A" frame and a guy wire that attach to the mounting brackets with quick disconnect pins.

RETRIEVER WINCHES.

Two electrically-driven retriever winches and their mounting platforms are provided in the kit and are installed on the sides of the cargo compartment along with the anchor cables. The winches retrieve the static lines, trailing from the anchor cables, back into the airplane after a paratroop drop. They may also be used for emergency retrieval of a parachutist. Retriever bars, with installation stowage brackets at each door, are also provided.

Static Line Retriever Winch Controls.

Two remote-control pistol grip type static line retriever winch control handles (figure 1-121) hang on hooks on the cargo compartment side walls aft of each troop door. The handles are connected to extension cords which allows the jumpmaster to move about with the handles while operating the winches. A three-position "IN," "OFF," "OUT") thumb switch and a trigger switch on each handle provides control of each winch. The trigger switch must be actuated before the winch will operate.

The left static line retriever winch receives power from the 28-volt main DC bus No. 1 (figure 1-68) and 115-volt monitor AC bus No. 2 power (figure 1-70).

The right-hand static line retriever winch receives power from the 28-volt main DC bus No. 2 (figure 1-67) and 115-volt monitor AC bus No. 3 power (figure 1-70).

SAFETY FENCES.

Safety fences are provided in the kit that allows for the capability of dropping cargo and paratroops on the same mission. When installed, the fences provide separation of the paratroops and cargo during an ADS operation while the paratroops are awaiting jump instructions. Stowage facilities for the paratroops' gear are provided on the fences. The fences are sectionalized for ease of installation and stowage. The vertical posts attach to the 25,000-pound tiedown rings in the cargo compartment floor and the fence support braces attach to the ADS rails.

AIR DEFLECTORS.

An air deflector is attached to the cargo compartment sidewall forward of each troop door. The air deflectors are electrically actuated to the extended position during jump operations.

A two-position PARATROOP AIR DEFLECTOR lever lock switch, located on the copilot's door arming control panel, is used to arm the air deflectors electrical circuits. Placing the switch to "ARM" provides power to the air deflector operating switch located on the LH aft loadmaster's control panel. The three-position ("EXTEND," "OFF," "RETRACT") operating switch can then be actuated to extend or retract the air deflectors. Three lights (IN TRANSIT, L EXTEND, R EXTEND) come on during deployment to show the status of the air deflector.

Power to operate the air deflectors and to illuminate the air deflectors transit/extend lights comes from the 28-volt main DC No. 1 (figure 1-68).

TROOP JUMP PLATFORMS.

A troop jump platform can be installed on the sill of each troop door frame. The platforms attach to the cargo floor with quick disconnect fittings which act as a hinge to permit the platform to be retracted into the airplane while still attached to the floor. When rotated into position, support struts with quick disconnect fittings on one end connect to the door frame and support the platform.

PARATROOP JUMP SIGNALS.

A panel with a red and green signal light is installed forward and aft of each troop door. These lights inform the jumpmaster and paratroops of jump instructions from the flight station. These lights are controlled from two JUMP SIGNAL panels (figure 1-121). One panel is on the copilot's side console and the other is on the navigator's console. The CAUTION LT switches control the red jump signal lights and the JUMP LT switches control the green jump signal lights. Mechanical interlocks prevent the JUMP LT switches from being actuated until the CAUTION LT switches are actuated. When one of the switches is actuated on any of the panels, corresponding CAUTION or JUMP indicator lights on all the panels come on to indicate that the signal lights are on in the cargo compartment. A two-position ("DIM," "BRIGHT") TROOP JUMP switch on the LH aft loadmaster control panel provides brilliance control of the jump signal lights.

All lights are dimmed automatically when the cargo compartment red dome lighting is in use, or when the white dome lighting is dimmed. The TROOP JUMP switch must be returned to "BRIGHT" after the cargo compartment lights are brightened.

AIRDROP SYSTEM (ADS).

Provisions for air drop of equipment are made by an inflight ramp operating system, extraction parachute system and miscellaneous ADS accessories. The ADS provides the capability to extract a drop load using one, two, or three extraction parachutes. It also provides the capability to rig and prepare the next air drop while in flight after the completion of the first air drop. Controls for operating the system are located on the copilot's side console, navigator's console, the loadmaster's forward ADS control panel, and the LH aft loadmaster control panel (figure 1-121). The controls on these panels allow the flight crew to open the cargo doors, actuate the extraction parachute release device, and close the doors when the drop is complete. For detailed information concerning the installation of ADS equipment, refer to Section X of T.O. 1C-5A-2-2, Airframe.

ADS EXTRACTION PARACHUTE SYSTEM.

The extraction parachute system is used to support and release the parachute and line integrated extraction system (PLIES) configuration weighing up to a total of 500 pounds. The location of the pressure door allows the release device to be positioned such that when the pressure door is in the overhead position, the release device rotates with the door to a point approximately 42 inches aft of the ramp. This configuration allows for a free-fall drop without the use of pendulum lines. The parachute release assembly and a target assembly are attached to the pressure door with quick release pins. The two assemblies are interconnected by a cable which permits a push force on the target assembly to actuate a mechanism in the release assembly and allow the PLIES configuration to drop free. The PLIES configuration is locked into place while the pressure door is closed. This procedure requires manual cocking of the target, manual positioning of the locking handle, inserting the PLIES configuration "V" rings into the slots in the release assembly, and repositioning the locking handle to the locked position.

Note

If the target assembly has been released electrically or manually, it must be recocked prior to reactivation.

The force to depress the target assembly for release of the PLIES configuration is provided by an electrical actuator assembly which aligns with the target assembly when the pressure door is in the overhead position. The normal electrical release of the PLIES configuration is controlled by a switch on the navigator's ADS panel.

In the event of electrical failure, a secondary cable system is provided for manually releasing the PLIES configuration. Power to energize the ADS arming and control relays and to illuminate the ADS lights, comes from the 28-volt main DC bus No. 2 (figure 1-67).

ADS EQUIPMENT.

ADS equipment, contained in a separate special mission kit, consists of restraint rails, guide rails, roller conveyors, and an extraction line guard.

Restraint Rails.

The rails are installed on the cargo compartment floor symmetrically about the airplane centerline. The rails provide the capability of restraining the cargo during flight and controlling the dropping of the cargo at the drop zone. The right-hand rails incorporate a simple lock/unlock mechanism to restrain the cargo during flight. The left-hand rails incorporate restraint mechanisms that are interconnected and controlled by a master control handle on the forward rail. The mechanisms provide positive restraint for the cargo during flight, variable aft restraint to control the airdrop, and a sequencing feature to permit airdrop of a partial load of cargo.

Aft Ramp Guide Rails.

For loading of cargo, guide rails are installed longitudinally across the aft ramp floor. The aft set of rails are spread apart to permit unobstructed exit of platforms during airdrop.

Roller Conveyors

Four rows of roller conveyors are installed on the back of the logistics roller conveyors in the cargo compartment and the aft ramp. The aft rollers in each row of conveyors on the aft ramp are teeter rollers that accommodate the loads resulting from the tilting motion of the platforms as they are being airdropped. The remaining rollers on the aft ramp and the cargo compartment are primary rollers.

Extraction Line Guard.

An extraction line guard is installed (inflight prior to airdrop) on the aft end of the ramp centerline to prevent snagging of the extraction lines as the load is pulled from the airplane.

ADS CONTROLS AND INDICATORS.

Controls and indicators for the ADS are located on the copilot's CARGO DOORS panel (figure 1-121) on the copilot's side console, on the navigator's ADS panel (figure 1-121), on the navigator's console, on the loadmaster's forward ADS panel, and on the LH aft loadmaster control panel.

Aft Cargo Doors Arming Switch.

The CARGO DOORS AFT arming switch on the copilot's side console is used to arm the LH aft loadmaster control panel and to set up the ADS function of the aft cargo doors opening sequence. Placing the switch to "ADS READY" causes the cargo doors ARMED light on the LH aft loadmaster control panel and ADS READY light on the loadmaster's forward ADS panel and ADS READY light on the navigator's ADS panel to come on indicating

that the LH aft loadmaster control panel is activated. The "SAFE" position causes the lights to go out and de-activates the LH aft loadmaster control panel.

ADS Chute Arming Switch.

The ADS parachute arming switch on the navigator's console arms the electrical circuits in the PLIES configuration release system. Placing the switch to "CHUTE ARM," arms the circuits for releasing the PLIES configuration and turns on the CHUTE ARM light on the loadmaster's fwd ADS panel. The "SAFE" position prevents inadvertent release of the PLIES configuration.

ADS Chute Release Switch.

The guarded ADS chute release switch, located on the navigator's console is used by the navigator to electrically release the PLIES configuration. Placing the switch to the "CHUTE REL" position releases the PLIES configuration, provided that the ADS chute arming switch is in the "CHUTE ARM" position.

ADS Pressure Door Switch.

The PRESSURE DOOR lever-lock switch on the LH aft loadmaster control panel is used to position the pressure door for ADS operation. Placing the switch to "UP" unlocks and lowers the ramp, allowing the pressure door to raise to the overhead (ADS) position, and returns the ramp to the closed and locked position.

Extraction Chute Manual Release Handle.

A two-position manual release handle located adjacent to the loadmaster's forward control panel is used to manually release the extraction parachute. The handle is equipped with a tensioning device to keep the cable tight. The handle is normally stowed in the up position. For manual release of the extraction chutes, the handle is pulled down firmly until it hits the stop.

CAUTION

The manual release handle should be used to release the parachute only in the event of failure of the chute release electrical circuitry.

ADS Ready Lights.

Two ADS READY lights, one on the navigator's ADS control panel and one on the loadmaster's forward

ADS panel, come on after the aft cargo doors arming switch on the copilot's side console is placed to the "ADS READY" position. Also, the ARMED light on the LH aft loadmaster's control panel comes on.

Pressure Door Up Lights.

A PRESSURE DOOR UP light on the loadmaster's aft control panel and a PRESSURE DOOR UP light on the loadmaster's forward ADS panel will come on after the pressure door is in the raised (ADS) position.

ADS Door Open Lights.

Two ADS DOORS OPEN lights, one on the Navigator's ADS panel and one on the loadmaster's forward ADS panel, come on when the center cargo door is fully open and the ramp is down.

ADS Parachute Arming Light.

A parachute ARMED light on the navigator's ADS control panel and a CHUTE ARM light on the loadmaster's forward ADS panel come on when the parachute arming switch on the navigator's ADS control panel is placed to "CHUTE ARM."

ADS Parachute Release Light.

A CHUTE RELEASE light on the loadmaster's forward ADS panel, comes on when the parachute release switch on the navigator's ADS control panel is placed to the "CHUTE REL" position.

AFT CENTER CARGO DOOR AND RAMP INFLIGHT OPERATION.

Preparation For Air Drop.

CAUTION

Do not open side doors in flight or structural damage or loss of doors may occur.

The following procedures are used to prepare the airplane for an airdrop operation:

1. Airplane - DEPRESSURIZED.

Depressurize the airplane in accordance with the Pressurization System - Pressurization Control For ADS Operation procedure.

2. Pressure Door Side Seals - RETRACTED

Manually retract the pressure door lower corner seals by pulling the nylon cords, then manually retract the pressure door side seals and retain them with the retaining handles.

CAUTION

The pressure door seals must be manually retracted and retained before operating the pressure door and ramp. Failure to do so may damage the seals when the door and ramp are opened or closed.

Note

An arming sequence switch, installed behind each side seal is actuated when the side seals are retracted. Failure to retract the seals will prevent the ARMED light from coming on and electrical actuation of the arming valve when the Aft Cargo Doors Arming switch is placed to ADS READY.

3. Airspeed - RECOMMENDED SPEED LIMIT OR LESS.

4. Aft Cargo Doors Arming Switch - ADS READY.

The ADS READY light on the loadmaster's forward ADS panel and the READY light on the navigator's ADS panel should come on and the ADS circuit on the loadmaster's left-hand aft control panel become activated.

WARNING

The airplane must be depressurized prior to arming the system and opening the pressure door.

5. A-Valve Safety-Guard - CHECKED INSTALLED

Check that the safety guard is installed on valve A.

6. Door Lock Status Panel Lights - CHECKED

Check that door status NOT LKD lights are out and the bypass position is not activated.

7. No. 1 Hydraulic System - PRESSURIZED

8. Pressure Door Upper Hinge Check - ACCOMPLISHED

Note

In the following step, it may be necessary to depress the manual override I valve in addition to the C valve to move the links overcenter against the stops.

a. Manual Override C Valve - DEPRESSED/RELEASED

Depress the manual override C valve for a minimum of 3 seconds then release. This will allow sufficient time for the pressure door to lock into its upper hinge lock. (Pressure door RH and LH outboard NOT LKD lights come on.)

b. Pressure Door Upper Hinges - VISUALLY CHECKED

Check that the upper hinges are selected and links (1) and (2), figure 1-124 are overcenter and against toe stop (3).

WARNING

Do not attempt to unlock and lower the ramp or operate the pressure door to its overhead position and do not attempt to lower the pressure door from its overhead position unless the links are on the stop. Failure to comply could cause injury to personnel and damage to the airplane.

9. Pressure Door Switch - UP AND HOLD

WARNING

Do not place the Pressure Door switch to the DOWN position once the pressure door movement has commenced. To do so may cause the pressure door to become unlocked from its upper hinge and fall. If pressure door movement has been interrupted, allow it to close under its own weight, then recycle the pressure door to full open without interruption.

CAUTION

A cargo compartment observer shall ensure that both pressure door seals are retracted and locked prior to pressure door or ramp movement. Failure to comply could result in structural damage to the airplane.

When the Pressure Door switch is placed and held in the UP position, the following occurs:

a. The pressure door lower actuators will retract and buttline 28 locks unlock (pressure door LH and RH inboard NOT LKD lights come on).

b. The ramp unlocks and the ramp lock mechanical indicators retract (ramp LH and RH NOT LKD lights come on).

c. The ramp will move down 3 inches.

d. The pressure door will rise to its overhead position and will lock in place (PRESSURE DOOR UP light on the aft control panel comes on and the PRESSURE DOOR UP light on the forward ADS panel comes on).

e. The ramp will close and lock (ramp LH & RH NOT LKD lights go off).

Aft Ramp And Center Cargo Door Opening Procedures.

The following procedures are used to open the aft ramp and center cargo door for ADS operation:

1. Airspeed - RAMP AND CENTER CARGO DOOR SPEED LIMIT OR LESS.

2. Doors Control Switch - OPEN AND HOLD.

At the forward ADS control panel, place and hold the Doors Control switch to the OPEN position until the ADS DOOR OPEN light comes on. This action also causes the DOOR OPEN light on the navigator's ADS panel to come on. The aft ramp and center door should now be open for the airdrop operation.

Aft Ramp, Center Cargo Door, and Pressure Door Closing Procedures.

The following procedures are used to close the aft ramp and center cargo door after the airdrop operation is completed:

1. Airspeed - RAMP AND CENTER CARGO DOOR SPEED LIMIT OR LESS.

2. Doors Control Switch - CLOSE AND HOLD.

Place and hold the DOORS CONTROL switch on the loadmaster's forward ADS panel to the CLOSE position. The ADS DOOR OPEN light on this panel and the DOOR OPEN light on the navigator's ADS control panel go off when the aft center cargo door and aft ramp start to close. When the aft center door and ramp are closed and locked, after approximately 15 seconds, the UNPRESS DOOR OPEN light on the pilot's annunciator panel goes off.

3. Pressure Door Side Seals - CHECKED RETRACTED

Check that the pressure door side seals are fully retracted.

CAUTION

Before attempting to close the pressure door and ramp, a visual check shall be made to ensure that the pressure door seals are fully retracted and are locked in place with the retaining handles. Failure to comply could result in damage to the seals if they are not fully retracted when the pressure door and ramp are closed.

Note

An arming sequence switch, installed behind each side seal is actuated when the side seals are retracted. Failure to retract the seals will prevent the ARMED light from coming on and electrical actuation of the arming valve when the pressure door switch is placed to DOWN.

4. A - Valve Safety Guard - CHECKED

Check that the safety guard is installed on valve A.

5. Pressure Door Upper Hinges - VISUALLY CHECKED

Visually check that the pressure door upper hinges are selected and links (1) and (2), figure 1-124, are over center and against the stop (3).

WARNING

Do not attempt to lower the pressure door from its overhead position unless the links are on the stop. Failure to comply could cause injury to personnel and damage to the airplane.

6. Pressure Door Switch - DOWN AND HOLD.

On 68304, 68307, 70167, 70168 and 70170 through 90027 not modified by T.O. 1290E, when the Pressure Door switch is placed to DOWN, and after the pressure door starts down, and prior to reaching the closed position, hold the manual override L valve depressed until the ramp is closed and locked.

CAUTION

Hold the manual override L valve depressed until the pressure door and ramp not lkd lights go off. Failure to comply could result in the pressure door striking the ramp and damaging the hinge pins.

Place and hold the PRESSURE DOOR switch on the loadmaster's aft control panel to the DOWN position.

a. Ramp unlocks and lowers 3 inches LH and RH ramp NOT LKD lights come on.

b. The pressure door will pivot and move down to its closed position (PRESSURE DOOR UP light goes out).

c. The ramp will then move to its closed position.

d. The ramp will lock to the fuselage and the mechanical lock indicators will extend (Ramp LH & RH NOT LKD lights go off).

e. Pressure door lower actuators extend, the inboard locks lock, the LH and RH inboard NOT LKD lights go out. The upper hinge mechanism then unlocks from its overhead position, simultaneously locking the pressure door to lower hinge (Pressure door LH & RH outboard NOT LKD lights go out). All the cargo door NOT LKD and PRESSURE DOOR UP lights on the panel are off. The CHUTE RELEASE and PRESSURE DOOR UP lights on the loadmaster's forward ADS panel are off, and the PRESS DOOR OPEN light on the pilots' annunciator panel also go off.

7. AFT CARGO DOORS Arming Switch - "SAFE."

The ADS doors ARMED light on the loadmaster's left aft control panel, the ADS READY light on the loadmaster's forward ADS panel, and the READY light on the navigator's ADS panel should go off.

8. Manually extend pressure door side seals.

ADS NORMAL OPERATION.

Note

The equipment, platform, and airplane will be loaded and rigged for airdrop mission prior to the flight in accordance with instructions in Section VII of T.O. 1C-5A-9, Loading Instructions.

Accomplishment of a normal cargo airdrop requires coordination of functions accomplished by the various crew members. In order to assure proper coordination of these functions, interphone communication is maintained throughout the mission, and the specific functions are scheduled at established check periods preceding and following the drop.

OXYGEN SYSTEM.

The airplane oxygen supply system consists of two separate liquid oxygen converters connected in parallel to a common distribution manifold that supplies oxygen to the flight crew, relief crew, courier compartment, troop compartment and all portable oxygen bottle recharger outlets. The converters supply gaseous oxygen to the common distribution manifold through isolation check valves which prevent loss of oxygen pressure due to a fault in either one of the converters. A single converter cannot be selected to supply the distribution manifold. There are no provisions to isolate a single compartment or outlet from the common manifold. The system provides oxygen to enable the crew and other personnel to continue the flight safely in the event cabin pressurization is lost or other emergencies occur.

Portable oxygen bottles are provided to enable personnel to walk around the airplane during unpressurized flight. Crew members such as student or instructor navigator, student or instructor flight engineer and personnel in the cargo compartment must use the portable oxygen bottles for their oxygen supply. The portable oxygen bottles may be recharged at any one of the oxygen bottle recharger outlets.

An oxygen generator assembly, stowed in a container under each seat in the cargo compartment seat pallet, is used to furnish breathing oxygen to the seat occupant. The assembly consists of an oxygen generator with an actuation device, housing, housing cap and a face mask attached inside the housing cap. Actuation of the generator is accomplished as the housing cap and mask are pulled away from the housing. The assembly will supply approximately 30 minutes of oxygen to the seat occupant.

OXYGEN DISTRIBUTION.

Oxygen distribution is accomplished by routing lines from the converters through isolation check valves to a junction inside the oxygen compartment. The resultant single supply line incorporates a high pressure relief valve and a manual shut-off valve. The supply line carries gaseous oxygen through the manual shut-off valve, to four heat exchangers. The four heat exchangers are mounted in the cargo compartment overhead under the forward end of the troop compartment floor. The heat exchangers are connected in series for maximum efficiency to ensure that the oxygen that is breathed is within 20 degrees of the associated compartment temperature. The supply line leaves the heat exchangers and is routed to the forward underdeck area where it services all of the crew regulators, continuous flow regulator and oxygen bottle recharger outlets (figure 1-126).

LIQUID OXYGEN SUPPLY.

The liquid oxygen supply is stored in a 25-liter and a 75-liter converter. Each converter incorporates a low pressure relief valve, a high pressure relief valve and associated plumbing to convert the liquid oxygen to a gaseous state. The gaseous oxygen is routed to the common manifold through isolation check valves. The converters are installed in an enclosed compartment in the left main landing gear pod fairing between the two main bogies. The two converters are serviced from a ground service box located below the converter compartment and accessible from the ground. Each converter has its own fill-buildup-vent valve, a drain valve, and an overboard vent that is located aft and down from the ground service box on the main landing gear fairing.

LIQUID OXYGEN SUPPLY CONTROLS.

Liquid Oxygen Supply Manual Shutoff Valve.

A manual shutoff valve is mounted to the aircraft pressure skin inside the oxygen converter compartment with the valve handwheel located inside the cargo compartment (figure 1-126) for ready access during flight. The valve is safety-wired in the open position.

LIQUID OXYGEN SUPPLY INDICATORS.

Liquid Oxygen Quantity Indicators.

Two liquid oxygen quantity indicators are located on the oxygen panel to the right of the oxygen regulator on the flight engineer's console (6 and 7, Figure 1-126). The 25-liter indicator is graduated in units of 5 from 0 to 25 in one-liter increments between the graduations. The 75-liter indicator is graduated in units of 15 from 0 to 75 in three-liter increments between the graduations. The indicators are functionally tested with the press-to-test switches on the oxygen panel. Power to drive and test the indicators comes from the 115-volt forward main AC bus No. 2 (figure 1-66).

Liquid Oxygen Quantity Indicator Test Switches.

Two liquid oxygen quantity indicator push-to-test TEST switches are located on the flight engineer's oxygen panel to the right of the oxygen regulator panel (9, figure 1-126). Depressing the test switches functionally tests the indicators by driving them toward zero. At approximately the 10 percent position on the indicators, the respective QTY LOW lights, near each test switch, come on. Releasing the test switches returns the indicators to their original position and the QTY LOW lights go out.

Liquid Oxygen Quantity Low Lights.

Two liquid oxygen QTY LOW lights are located on the oxygen panel to the right of the oxygen regulator on the flight engineer's console (figure 1-126). When the liquid oxygen quantity in either converter drops to 10 percent of its total capacity (1.e., 2.5 liters and 7.5 liters), a switch in the associated liquid oxygen quantity indicator actuates as the pointer passes the 10 percent position on that indicator. This action causes the associated QTY LOW light to come on. Each QTY LOW light is tested when the associated liquid oxygen quantity press-to-test switch is depressed. The lights receive power from the 28-volt isolated DC bus (figure 1-64).

OXYGEN WARNING SYSTEM.

The oxygen warning system is used to warn the flight crew and other personnel that the cabin altitude has reached an altitude of 12,500 to 14,000 feet and supplementary oxygen is required. The warning system is activated by two redundant pressure switches that are downstream of the continuous flow regulators (figure 1-126) in the oxygen supply line. When the switches are actuated, an electrical signal is sent to the audible and visual warning devices to alert the flight crew and other personnel to don their oxygen masks. Also, the oxygen mask storage container doors open automatically in the relief crew, courier and troop compartments and in the troop compartment lavatories. The warning devices are described as follows: An OXYGEN ON light on the continuous flow regulator panel comes on, all the relief crew, courier, troop, and cargo compartment white dome lights come on bright, all no smoking lights come on, and the warning horns sound in the airplane. The warning horns may be silenced by momentarily depressing the OXYGEN WARNING silence pushbutton on the copilot's side of the overhead panel. The warning horns continue to sound, unless silenced, until the cabin altitude drops below 11,500 feet and the continuous flow system is depressurized. At this point, the system returns to the condition prior to activation of the warning system, with the exception of the oxygen mask storage box doors. The warning system receives 28-volt DC power from the isolated DC bus (figure 1-64).

FLIGHT CREW OXYGEN SYSTEM.

The flight crew receives oxygen from the gaseous oxygen distribution system through two branches off of the supply line. The left branch services the pilot's, navigator's and observer's pressure demand regulators, and the portable oxygen bottle recharger outlet that is located forward of the navigator's table. The right branch services the copilot's and

flight engineer's pressure demand oxygen regulators and the portable oxygen bottle recharger outlet that is located forward of the flight engineer's table. There is also a recharger outlet at the emergency equipment access area across the aisle from the crew access ladder.

Flight Crew Oxygen Regulators.

A type CRU-49/A diluter demand pressure breathing regulator is installed at each of the following stations: pilot, copilot, observer, navigator, flight engineer and each of the six relief crew bunks. The pilot's and copilot's regulators are mounted on their side consoles, the observer's is located on the aft end of the pilot's side console, the navigator's is located under the left-hand edge of his work table, and the flight engineer's is located on the lower left-hand corner of the flight engineer's console. A regulator is located within reach of each crew bunk occupant.

Each regulator (figure 1-126) incorporates a visual flow indicator, a pressure gage, three levers to control regulator operation, and an inlet filter to prevent foreign particles from entering the regulator.

OXYGEN SUPPLY LEVER. A manual, two-position ("ON," "OFF") supply lever (3) is located at the lower right-hand corner of each regulator.

DILUTER LEVER. The diluter lever (4), on each regulator unit, is used to allow the regulator to deliver pure oxygen at all altitudes, or to provide automatic mixing of air and oxygen as required to maintain normal body oxygen needs at all altitudes. When set to "100% OXYGEN," the regulator supplies pure oxygen without air dilution; with the lever at "NORMAL OXYGEN," the normal air/oxygen dilution characteristics of the regulator are maintained. The lever is designed to prevent intermediate settings between the two positions of the lever.

EMERGENCY TOGGLE LEVER. The guarded emergency toggle lever (5) on each regulator may be set to one of three positions: With the lever at "EMERGENCY," oxygen is supplied to the mask at continuous positive pressure. With the lever at "NORMAL," oxygen flow and pressure is controlled automatically by the regulator. The "TEST MASK" setting is used when positive pressure is required at any altitude to test the fit of the mask around the face.

WARNING

The emergency toggle lever should remain in the center ("NORMAL") position, except when unscheduled pressure is required.

The metal guard, installed on each oxygen regulator in the flight station area, prevents inadvertent actuation of the emergency toggle lever to the "EMERGENCY" position.

VISUAL FLOW INDICATOR. The visual flow indicator (1) on each regulator is a slide-and-window device that indicates oxygen flow, during normal use of the oxygen mask, by blinking with the breathing cycle of the user. The blinker is masked when the oxygen flow ceases.

PRESSURE GAGE. The pressure gage (2) on the regulator is a dial-type instrument that indicates oxygen system supply pressure in pounds-per-square inch.

PORTABLE OXYGEN BOTTLES.

Twelve portable oxygen bottles equipped with pressure demand regulators are located throughout the airplane. The regulator consists of an oxygen pressure gage, altitude selector knob, and a strap and a clip for attachment. The pressure gage is red lined at 450 PSI and is normally serviced to 300 PSI from the airplane system. The altitude selector has positions of "NORM", "30M", "42M" and "EMER". The regulator delivers 100 percent oxygen in all positions. The "NORM" position is selected for all cabin altitudes up to 30,000 feet and delivers pressure on demand. The "30M" position is used from 30,000 to 40,000 feet cabin altitude. This position delivers a slight positive pressure. The "42M" position is used from 40,000 to 42,000 feet cabin altitude. The "EMER" position further increases the pressure for use over 42,000 feet. These units are located as follows:

One bottle, equipped with a fire-fighter's oxygen mask, is located on the forward side of the flight engineer's work table. A portable oxygen bottle recharger outlet is also located here.

One bottle, equipped with a fire-fighter's oxygen mask is located on the forward side of the navigator's work table. A portable oxygen bottle recharger outlet is also located here.

One bottle, equipped with a fire-fighter's oxygen mask, is located on the emergency equipment access area, across the aisle from the flight station ladder. A portable oxygen bottle recharger outlet is also located here.

One bottle, equipped with a fire-fighter's oxygen mask, is located in the aisle between the bunk compartment doors.

One bottle, equipped with a fire-fighter's oxygen mask, is located in a recessed cubicle across from the flight deck service door. A portable oxygen bottle recharger outlet is also located here.

One bottle, equipped with a fire-fighter's oxygen mask, is located on the aft right side of the troop compartment. A portable oxygen bottle recharger outlet is also located here.

On airplanes modified by T.O. 1263, one bottle, equipped with a fire-fighter's oxygen mask, is located on the aft right side of the troop compartment on the floor next to the loadmaster's outboard seat.

Two bottles, each equipped with a fire-fighters oxygen mask, are located on the forward left and right side of the cargo compartment. A portable oxygen bottle recharger outlet is located by the left portable oxygen bottle near the crew entrance door.

Two bottles, each equipped with a fire-fighters oxygen mask, are located on the left and right side of the center cargo compartment. A portable oxygen bottle recharger outlet is located near the right hand bottle.

Two bottles, each equipped with a fire-fighters oxygen mask, are located on the left and right side of the cargo compartment forward of the troop doors. A portable oxygen bottle recharger outlet is located by the left portable oxygen bottle near the left troop door.

Three portable oxygen bottles, each equipped with constant flow regulators, are provided in the lavatories and are located as follows:

One bottle is located in the crew lavatory in the relief crew area with a mask attached in a canvas pouch. A portable oxygen bottle recharger outlet is provided here also and is supplied from the same line that services the flight crew oxygen system.

One bottle is located in each troop compartment lavatory. Each bottle is equipped with a mask attached in a canvas pouch.

Portable Oxygen Bottle Duration Time.

The expected normal breathing duration time of the MA-1 portable oxygen bottle charged to 300 PSI using an A-21 regulator is as follows:

ALTITUDE	15,000 ft	25,000 ft	35,000 ft	42,000 ft	Above 42,000
REGULATOR SETTING	Normal	Normal	30M	42M	Emergency
MB-1 FIRE FIGHTERS MASK	6 Min	6 Min	50 Sec	35 Sec	30 Sec
PRESSURE DEMAND AIRCREW MASK	7 Min	7 Min	6 Min	4 Min	3 Min w/no mask leakage

The expected normal breathing duration time of the MA-1 portable oxygen bottle charged to 400 PSI using an A-21 regualtor is as follows:

ALTITUDE	15,000 ft	25,000 ft	35,000 ft	42,000 ft	Above 42,000
REGULATOR SETTING	Normal	Normal	30M	42M	Emergency
MB-1 FIRE FIGHTERS MASK	9 Min 20 Sec	9 Min 20 Sec	1 Min 10 Sec	50 Sec	45 Sec
PRESSURE DEMAND AIRCREW MASK	10 Min 20 Sec	10 Min 20 Sec	7 Min 30 Sec	5 Min 45 Sec	4 Min 30 Sec w/no mask leakage

OPERATION OF FLIGHT CREW OXYGEN SYSTEM.

During flight, when oxygen is not being used, the oxygen regulators will be set with the oxygen supply lever placed on "ON," the diluter lever placed to "100% OXYGEN," and the emergency toggle lever set to "NORMAL." This allows immediate use of oxygen if it is needed. When oxygen is used under normal conditions, the diluter lever should be set to "NORMAL." If any symptoms of hypoxia are felt, or if doubt exists that the regulator is operating normally, place the diluter lever to "100% OXYGEN." Use the "100% OXYGEN" position when exposure to smoke or fumes is anticipated or encountered. The "EMERGENCY" position is used for short emergency periods. The "TEST MASK" position is used to pressure check the oxygen mask for fit.

WARNING

When inflight, if any crew member goes off oxygen, he should place the regulator diluter lever to "100% OXYGEN" with the supply lever "ON."

Crew Check.

1. Check oxygen pressure within limits of 275 to 450 PSIG with the system static (no flow). The system pressure limits shall be 275 to 400 PSIG during flow conditions after the system has been stabilized.

Note

Due to thermal expansion of gases trapped down stream of the isolation check valves, system pressure may rise to 450 PSIG. If pressure is above 400 PSIG, it should be bled down by use of one of the crew regulators and checked again for stabilization in the normal range 275 to 400 PSIG.

2. Position the regulator supply lever to "ON."

3. Check all hoses and connectors for condition.

4. Position the diluter lever to "100% OXYGEN." Check the visual flow indicator for a no-flow indication. No sound of escaping oxygen should be heard.

5. Connect the mask to the hose, adjust the mask to the face and breathe normally a minimum of 3 cycles, observing that the regulator flow indicator blinks white on inhalation and black on exhalation.

6. Perform a pressure check as follows:

a. Position the emergency toggle lever to "TEST MASK." Oxygen should flow steadily into the mask under POSITIVE pressure, check mask to face seal.

b. Position the emergency toggle lever to "EMERGENCY." Oxygen should flow steadily into the mask under slight positive pressure. Take a deep breath and hold. A white blinker indicates a leak. If a leak in indicated, recheck the equipment, readjust the mask and reaccomplish the check. If the blinker is still white, the regulator, hose or vale is not holding pressure and the cause of the leak must be corrected.

7. Return the emergency toggle lever to "NORMAL."

OXYGEN DURATION CHART.

The duration of oxygen supply is shown in figure 1-127. The chart can be used to determine the oxygen flow for any number of crew members (on NORMAL or 100% OXYGEN) and passengers to the maximum number.

Example

Given:

6 Crew Members on NORMAL Oxygen

25 Passengers on Continuous Flow Oxygen

25,000 Feet Pressure Altitude

Oxygen Quantity: 40 Liters

Find:

Duration of Oxygen Supply

Solution:

(Figure 1-127)

Crew Oxygen Flow: 1.5 Liters Per Hour

Passenger Oxygen Flow: 4.3 Liters Per Hour

Total Oxygen Flow: 1.5 + 4.3 = 5.8 Liters Per Hour

Oxygen Supply Duration: $\frac{40}{5.8}$ = 6.8 Hours

Note

If the entire supply of oxygen is used or lost, purging of the system is required prior to filling. Reference T.O. 1C-5A-2-1 for servicing and purging requirements.

RELIEF CREW BUNK AREA OXYGEN SYSTEM.

The relief crew bunk area oxygen system receives gaseous oxygen from a branch off the same line that services the flight station. Each of the six bunks is provided with a Type CRU-49/A diluter demand pressure breathing regulator, a flexible hose for connecting the regulator to the bunk occupants personal mask, and a storage area adjacent to the regulator for storing the hose and mask. All of these items are within easy reach of the bunk occupant. Since the bunk area regulators are the same as the flight crew regulators, refer to the Flight Crew Oxygen Regulators and Operation of Flight Crew Oxygen System paragraphs in this section for description and operation of the regulators.

CONTINUOUS FLOW OXYGEN SYSTEM.

The relief crew, courier and troop compartment oxygen supply is controlled from the continuous flow oxygen regulator panel (figure 1-126) located above the relief crew compartment coat rack. The panel contains a test switch (15), an OXYGEN ON light (16), a system supply pressure gage (10), and two continuous flow oxygen regulators (12). Each regulator contains a cabin altitude sensing and test port (11), a regulator manual turn-on lever (13), a regulator ON-OFF pressure-actuated indicator (14), an automatic

aneroid operated turn-on valve and a pressure switch to activate the electrical warning system.

If the cabin altitude reaches a pressure equivalent to 12,500 to 14,000 feet, the regulators automatically open and oxygen begins to flow. When the oxygen pressurizes the system, the OXYGEN ON light located on the regulator panel comes on, all dome lights (except the flight station and the relief crew bunk dome lights) come on to full brightness, the NO SMOKING signs illuminate, the warning horn sounds, and the mask storage container doors automatically open, allowing the masks to drop down in front of the seat occupants (figure 1-126). Oxygen flows to the mask through lanyard-operated valves which are opened by the motion of the mask being pulled down to the users face. Oxygen continues to flow until the cabin altitude drops below 11,500 feet. All lights remain on bright as long as oxygen pressure is maintained in the system. The warning horn may be silenced by depressing the warning horn silence pushbutton located on the pilots' overhead panel (figure 1-126).

Three NAS1179 commercial type oxygen masks are stored in a mask stowage container over each seat assembly. Should the cabin pressure altitude reach a level that requires supplementary oxygen (12,500 to 14,000 feet), the oxygen warning system is activated, the oxygen mask stowage container door automatically opens.

WARNING

The cabin altitude test and sensing port on the regulators should never be covered or plugged. This will prevent automatic deployment of the mask.

Continuous Flow Oxygen System Controls.

REGULATOR TURN-ON LEVER. A two-position ("ON" and unmarked OFF) regulator manual turn-on lever (13), on each regulator is used to bypass the automatic aneroid operated valve which allows the oxygen supply to be turned on at any cabin altitude.

The manual turn-on lever is normally left in the OFF position. If placed to "ON," the oxygen supply is turned on and the oxygen masks in the overhead stowage containers will drop down.

TEST SWITCH. A two-position ("TEST," "NORMAL") momentary test switch (15) is used to test the OXYGEN ON light, all compartment dome lights (except those in the flight station and the relief crew bunk dome lights), the three NO SMOKING signs and the oxygen warning horn system for proper operation.

When the switch is momentarily placed to "TEST," the 28-volt isolated DC bus power actuates all indicators and warning devices, except that the oxygen mask storage container doors do not automatically open.

The warning horn silence circuit may be tested prior to releasing the test switch by pressing the silence pushbutton on the pilots' overhead panel (figure 1-126).

After releasing the test switch, everything returns to its original condition prior to actuating the test switch.

Continuous Flow Oxygen System Indicators.

SUPPLY PRESSURE GAGE. A continuous flow oxygen panel pressure gage (10) is provided to indicate the pressure existing in the gaseous oxygen supply system.

REGULATOR INDICATOR. A pressure actuated ON, OFF indicator (14) is installed on the regulator to indicate that oxygen is being supplied through that regulator to the continuous flow distribution system.

OXYGEN ON LIGHT. An OXYGEN ON light (16) is provided to indicate when the continuous flow oxygen system has been turned on. The light comes on when the system is tested or when it is supplying oxygen. The light receives 28-volt DC power from the isolated DC bus (figure 1-64).

Continuous Flow Oxygen System Panel Check.

When required by the aircrew visual inspection, the continuous flow oxygen system panel shall be checked as follows:

1. Check oxygen pressure (275 - 450 PSI).
2. Place test switch to TEST and check:
   a. OXYGEN ON light on.
   b. A relief crew dome light on bright.
   c. A NO SMOKING light on.
   d. Warning horn sounding.

RELIEF CREW AND COURIER COMPARTMENT OXYGEN SYSTEM.

The relief crew and courier compartment oxygen system receives gaseous oxygen from a branch off the same line that services the flight station and relief crew bunk area. Oxygen from this branch is routed to the continuous flow oxygen system regulator panel located above the relief crew area coat rack to a portable oxygen bottle recharger outlet located in the relief crew lavatory and another located in a recessed cubicle across from the flight deck service door.

Three NAS1179 commercial type oxygen masks are stored in a mask storage container over each seat assembly. Operation of these masks is through the continuous flow oxygen regulator panel. Refer to Continuous Flow Oxygen System in this section for description of operation.

TROOP COMPARTMENT OXYGEN SYSTEM.

The troop compartment oxygen system receives its oxygen supply from a kit installation that is tied into a service line from the continuous flow oxygen system panel. The kit installed in the troop compartment is provided with overhead mask storage above each seat assembly for automatic mask presentation (figure 1-126). The mask storage container for the troop compartment is the same as used in the relief crew area and courier compartment. Control of the system is accomplished through the continuous flow oxygen system panel. Refer to the Continuous Flow Oxygen System Panel paragraph, this section, for description and operation.

Troop Compartment Lavatory Oxygen Provisions.

A wall-mounted single oxygen mask storage box and mask is provided for each lavatory compartment in the troop compartment. Oxygen is supplied from the troop compartment oxygen distribution system kit. The oxygen mask is automatically presented and is connected to the fitting outlet.

Portable Oxygen Bottle Recharger Outlets.

Portable oxygen bottle recharger outlets are located on the aft outside wall of the troop compartment lavatory and on the right side near the troop compartment entry.

CARGO COMPARTMENT OXYGEN SYSTEM.

Supply line branches from the flight crew station, and troop compartment terminate at three oxygen bottle recharger outlets in the cargo compartment. One outlet is located aft of the crew entrance door, one forward of the left aft troop door, and one midway on the right side near the hydraulic service center.

For location of portable fire-fighter oxygen mask-cylinder-regulator units, refer to Portable Oxygen Bottles in this section.

A portable oxygen generator assembly, stowed in a container under each seat in the cargo compartment seat kit pallet, is used to furnish breathing oxygen to the seat occupant. The assembly consists of an oxygen generator with an actuation device, housing, housing cap and a face mask attached inside the housing cap. Actuation of the generator is accomplished as the housing cap and mask are pulled away from the housing. The generator will supply approximately 30 minutes of oxygen.

CAUTION

Do not reinstall mask hose, mask and cap after use. They may be damaged by heat from the oxygen generator.

PORTABLE OXYGEN BOTTLE STOWAGE.

Stowage areas for portable oxygen bottles have been provided (figure 3-1). Refer to Portable Oxygen Bottles, this section, for locations.

WARNING SYSTEMS.

MASTER CAUTION SYSTEM.

The master caution system provides a centrally located means for monitoring all caution and warning indicators in the pilot's flight station. The system consists of two master CAUTION lights, two master AUTO lights and an annunciator panel having word-warnings lights (figure 1-128). When any of the annunciator caution lights come on, except those on the last three rows on the right of the annunciator panel, the master CAUTION lights on the pilot's and co-pilot's instrument panels will also come on. When any of the annunciator caution lights in the last three rows on the right of the annunciator panel come on, the master AUTO lights on the pilot's and copilot's instrument panels also come on. These annunciator caution lights are those that warn of failures in the automatic flight control system. The master caution system provides indication of which is the latest malfunction signal to be received if a second malfunction occurs after a first malfunction has been indicated. The first malfunction signal causes the annunciator light to flash. The flashing indication may be changed to a steady indication by depressing either master light to reset the system. This also turns off the master lights. The annunciator light remains on until the indicated condition has been corrected. If a second malfunction is indicated, the master lights will again come on and the applicable annunciator light will flash. The annunciator lights and master lights receive 28-volt DC power from the isolated DC bus (figure 1-64).

New par - See 15-88

Note

If a second malfunction occurs in a system where the annunciator light is still illuminated from an earlier malfunction within this system, no further warning will be indicated either by the master caution/master auto or the system annunciator light.

Caution LIGHTS Test Switches.

There are three caution lights test switches. One is located on the pilot's annunciator panel (figure 1-128), one is located on the hydraulic systems control and indicator panel (figure 1-35), and one is located on the navigator's console (figure 1-76). Each switch has a "TEST" position, but the navigators' test switch also has a "NORMAL" position. Placing the switch on the pilots' annunciator panel to "TEST," causes all lights on the annunciator panel to flash, and causes all word-warning caution lights on the instrument panel, overhead console, and side consoles to come on steady. Placing the navigator's or flight engineer's switch to "TEST," causes all word-warning caution lights on the associated console to come on steady. The switches receive 28-volt DC power from the isolated DC bus (figure 1-64).

Caution Lights Dimming Switches.

One INDICATOR LIGHTS dimming switch is located on the pilot's annunciator panel (figure 1-128), and one on the navigator's console (figure 1-76). The switches are provided for dimming the caution lights for night operations. The "DIM" position of the annunciator panel dimming switch is effective only if the THUNDERSTORM lights switch is in the "OFF" position and the pilot's INSTRUMENT dimming switch is in any position other than "OFF." The "BRIGHT" position turns the lights from dim to bright.

DOOR WARNING SYSTEM.

A door warning system is provided to warn the flight crew that a pressure door or an unpressurized door is not locked. A door not locked signal is monitored by 29 lights on the LH FORWARD LOADMASTER CONTROL panel, by 17 indicator lights on the LH AFT LOADMASTERS CONTROL panel, by two indicator lights on the pilots' annunciator panel, by one indicator light on the flight engineer's annunciator panel, and by one indicator light near the flight deck service door.

When one of the door NOT LKD lights on either of the loadmaster's control panels comes on, the applicable DOOR OPEN light on the pilots' annunciator panel and the flight engineer's annunciator panel and the CAUTION lights on the pilot's and copilot's main instrument panel come on. Depressing the illuminated door NOT LKD light assembly causes the BY-PASS portion of the light assembly to come on, the applicable PRESS DOOR OPEN or UNPRESS DOOR OPEN light and the CAUTION light to go out. The BY-PASS light will remain on until power is removed from the panel, or the indicator light is again depressed to remove the by pass condition.

A LAMP TEST switch on each of the two control panels tests all the door warning lights.

The following doors and ramps cause the appropriate door annunciator lights to come on:

PRESS DOOR OPEN

VISOR DOOR
FORWARD RAMP
CREW ENTRANCE DOOR
AFT RAMP
AFT PRESSURE DOOR

UNPRESS DOOR OPEN

FLIGHT DECK SERVICE DOOR
TROOP COMPARTMENT SERVICE DOOR
LEFT TROOP DOOR
RIGHT TROOP DOOR
SIDE CARGO DOOR (LH)
SIDE CARGO DOOR (RH)
CENTER CARGO DOOR
HORIZONTAL STABILIZER ACCESS DOOR
FORWARD UNDERFLOOR COMPARTMENT DOOR
AFT WINCH ACCESS HATCH

The door warning circuits and lights are powered with 28-volt DC power from the No. 2 main DC bus (figure 1-67).

SMOKE DETECTION SYSTEM.

The smoke detection system consists of five detector units, a common amplifier, and the associated controls and indicators. A detector is installed in each of the following locations: avionics compartment, AC load center, troop compartment, center cargo compartment, and aft cargo compartment. Each detector consists of a beacon light, a test light, and a photoelectric cell. The beacon light shines continuously at a 90 degree angle to the photoelectric cell. Accumulated smoke particles cause light from the beacon to be reflected into the photoelectric cell which sends a signal through the amplifier to caution lights at the flight engineer's station. The smoke detection system receives 28-volt DC power from the isolated DC bus (figure 1-64).

Smoke Detection Locate Switch.

The SMOKE DETECTION LOCATE switch is located on the SMOKE DETECTION panel on the flight engineer's console (figure 1-129). The positions are "NORM," "AVION," "AC LOAD CTR," "CTR CARGO," "TROOP," and "AFT CARGO." In the "NORM" position, power is applied to the beacon light and photoelectric cell of all detector units. In each of the

other positions, only the detector selected is energized; all other are de-energized. In this manner, smoke indication may be isolated to a particular unit. A LOCATE SWITCH ON light directly above the switch and the SMOKE DET light on the flight engineer's annunciator will come on whenever the switch is out of the "NORM" position.

Smoke Detection Test Switch.

The SMOKE DETECTION TEST switch is on the SMOKE DETECTION PANEL (figure 1-129). The switch has an "OFF" position and five other positions corresponding to the five detector units. When a detector unit is selected, power is applied through the beacon light to a test light which shines directly into the photoelectric cell. This causes the photoelectric cell to send a signal through the amplifier to the SMOKE DET light on the flight engineers annunciator panel and to the SMOKE light on the SMOKE DETECTION panel. Failure of the SMOKE DET light to come on indicates a malfunction in the detector unit or in the amplifier.

Smoke Lights.

Two lights, a SMOKE DET light located on the flight engineer's annunciator panel (figure 1-21) and a SMOKE light on the SMOKE DETECTION panel (figure 1-129) come on whenever an energized detector unit detects smoke particles. The lights receive 28-volt DC power from the isolated DC bus (figure 1-64).

AUDIBLE WARNING AND ALARM SYSTEMS.

Six audible warning and alarm systems are installed in the airplane. These systems consists of APU ground fire warning, oxygen warning, landing gear warning, TF/TA warning, audible stall warning and bailout alarm. The first four systems are described under their applicable systems. The bailout alarm system is described below.

On airplanes modified by T.O. 1387, an additional (FSS) audible warning and alarm system is installed. This system is described under the Fire Suppression System (FSS) in this section.

The audible stall warning system is described under the Stallimiter System paragraph in this section.

Bailout Alarm System.

The bailout alarm system is used to alert all personnel to prepare for a crash landing or ditching, or to alert the flight crew to prepare for and execute a bailout from the airplane. The BAILOUT switch, located on the overhead console (figure 1-12), is used to initiate the bailout alarm. When placed to "ALM," 28-volt DC power energizes the warning horn control relay. This power comes from the emergency DC bus (figure 1-61). The relay then routes the 28-volt DC power, described above to the warning horns.

On 00461 and up and airplanes modified by T.O. 1306, the warning horns receive 28-volt DC power directly from the normal and standby batteries through the BAILOUT switch and the normally closed contacts of the warning horn control relay whenever the emergency DC bus is de-energized. Under this condition, the normal battery supplies power to the warning horns in the bunk and aft cargo compartments and the standby battery supplies power to the warning horns in the relief crew galley, courier, troop and forward cargo compartments.

Note

The warning horns will sound any time the BAILOUT switch is actuated, regardless of the BATTERY switch position.

FIRE SUPPRESSION SYSTEM (FSS).

On airplanes modified by T.O. 1387, a fire suppression system is installed for fire prevention, detection and suppression. The FSS consists of a fuel tank inerting and pressurizing subsystem, a nitrogen fire suppression subsystem and a FE1301 fire suppression subsystem.

Fire prevention is provided by inerting and pressurizing the fuel tanks and by flooding certain areas (figure 1-56C) of the airplane with nitrogen during emergencies that could result in fire.

Fire detection is provided by thermal sensors located throughout nitrogen-protected areas of the airplane and optical detectors located throughout the FE1301-protected areas of the airplane. The thermal sensors detect heat and the optical detectors detect light (flame) and provide warnings of hazardous conditions to the crew.

Fire suppression is provided by flooding areas (figure 1-56C) of the airplane with nitrogen or FE1301, a bromotrifluoromethane liquid entinguishing agent.

CENTRAL PROCESSING UNIT (CPU).

The CPU is located in the avionics compartment (figure 1-73) and provides the following functions for the FSS:

Fuel Tank Inerting and Pressurizing.

The CPU controls fuel inerting and fuel tank pressurizing. For further information on this subject, refer to "Fuel Tank Pressurizing" and "Fuel Tank Pressure Control" in this Section.

Nitrogen Measurement.

When nitrogen is released into a fire zone, the quantizer in the CPU receives signals from turbine flow transducers. When the preset quantity of nitrogen has been released into the fire zone, the flow of nitrogen is shut off.

Signal Conditioner.

The signal conditioner receives signals from pressure transducers in the fuel tanks and dewars. It amplifies and conditions the signals to provide wing tank pressure warning signals to the flight engineer's FIRE SUPPRESSION PANEL. It also sends pressure signals to the liquid nitrogen service panel.

Scrub Sequencer.

Fuel scrubbing is controlled on the basis of changes in atmospheric pressure. As the airplane climbs and encounters reduced pressure, the scrub sequencer initiates scrubbing action to reduce and dilute the oxygen that is released from solution in the fuel.

Fire Signal Processing.

When the CPU receives fire signals from the thermal sensors and the optical detectors, it distinguishes real fire signals from signals caused by open wires, shorts or test voltages. When a signal has been verified and its zone source determined, the appropriate warning signals are transmitted to the warning indicators.

System Testing.

The CPU provides test capabilities for checking out the FSS thermal sensor continuity, optical detector operation, warning indicators and horns, agent discharge signals, squib firing voltage availability, simulated agent discharge, and discharge indicators.

Electric Power.

The CPU uses 28-volt DC power from the isolated DC bus (figure 1-64) whenever this bus is energized. If this bus is not energized, the CPU receives 28-volt DC power directly from the airplane normal battery (figure 1-72) provided the arming switch on the FIRE SUPPRESSION panel (figure 1-56B) in the nose wheel well is in the "POWER/ARM" position.

FSS FIRE DETECTION.

Fire detection is accomplished through the use of continuous loop thermal sensors and optical detectors located throughout the airplane. Signals generated by these devices are sent to the CPU for evaluation. The CPU then turns on the appropriate fire zone alarm light or lights, and when the airplane is on the ground, sounds the warning horns in the courier and cargo compartments. Thermal sensors are installed in the nitrogen-protected zones of the airplane (figure 1-56C). The sensors are tubular devices installed in patterns so as to cover all areas of each zone. Each sensor is partially pressurized with a gas, and also contains a material that will release gas with increase of temperature. When any part of the sensor is heated above the preset reaction temperature, the free gas in the sensor and the gas released from the material increases the pressure in the sensor and moves a piston which closes a switch. The signal that results goes to the CPU for evaluation. Operation of these sensors is reversible. If the temperature in the fire zone goes below that of the preset reaction temperature, the material recovers some of the gas, the pressure in the sensor is reduced, the switch is opened and the fire alarm signal ceases.

Optical detectors are installed in the FE1301-protected areas of the airplane (figure 3-1). The detectors are photoelectric cell devices, arranged to "look" at all parts of the protected areas. The cells are sensitive to the light of a flame and are not sensitive to fluorescent or incandescent lighting. When a flame occurs within the viewing range of a sensor, it causes the photoelectric cell to conduct and send a signal to the CPU for evaluation. When a flame is no longer detected, the photoelectric cell will stop sending a fire detection signal. The FSS audible warning horns will stop sounding. Visual warning indications will remain on the flight engineer's and cargo compartment FE1301 panels. Momentarily placing the FSS test switch on the NITROGEN FIRE SUPPRESSION panel to "TEST" will remove these indications.

Under certain sun angle and atmospheric conditions, a sunlight is produced that to a photoelectric cell, resembles a flame. One optical detector at each end of the cargo compartment is capable of distinguishing this light and adjusting the other detector's sensitivity to prevent generating a false fire warning signal.

Note

These two optical detectors are not installed on 80217.

The thermal sensors and optical detectors normally receive 28-volt DC power from the isolated DC bus (figure 1-64) whenever it is energized. If this bus is not energized, 28-volt DC power can be obtained

directly from the airplane normal battery by placing the arming switch on the nose wheel well FIRE SUPPRESSION panel to the "POWER/ARM" position.

FUEL TANK INERTING AND PRESSURIZING SUBSYSTEM.

Fire prevention is provided by inerting and pressurizing the fuel tanks as described under "Fuel Tank Pressurizing" and "Fuel Tank Pressurizing" and "Fuel Tank Pressure Control" in this Section.

NITROGEN FIRE SUPPRESSION SUBSYSTEM.

The nitrogen fire suppression subsystem provides a means for suppressing fires in unmanned areas of the airplane. These unmanned areas (fire zones) include the wing leading edges, pylon leading edges, wing dry bay, wing root dry bay, cargo compartment underfloor, NLG wheel well, MLG wheel wells and PTU areas (figure 1-56C).

The nitrogen comes from two liquid nitrogen storage dewars located in the wing roots aft of the rear wing beam (figure 1-56A). The dewars are vacuum-insulated pressure vessels. Each dewar has a capacity of 750 pounds (110 gallons) of drainable nitrogen in the liquid state. The dewars supply nitrogen for fuel tank pressurizing, fuel scrubbing, and fire suppression. Dewar service is controlled from a service panel (figure 1-56B) located in the right aft main wheel well. This panel also provides for testing and checking out various components of the FSS.

Nitrogen for fire suppression is driven by the self-generated pressure in the dewars through two master fire valves to the 12 fire zone valves. The zone valves control the nitrogen routed to a number of spray nozzles located so that each fire suppression zone can be thoroughly saturated with nitrogen when its associated zone discharge pushbutton is depressed. Nitrogen is discharged into the desired zone as a spray of liquid and gas. This mixture leaves the nozzles and rapidly expands so that the fire zone is immediately flooded.

WARNING

Do not remain in a closed space with nitrogen without an oxygen mask. Nitrogen is a harmless gas, but when it occupies a closed space to the exclusion of breathable air it can result in suffocation of personnel.

Nitrogen Fire Suppression Subsystem Controls.

Controls for testing, arming, discharging nitrogen and dewar servicing are located on four control and indicator panels (figure 1-56B).

LAMP AND CONTROL CIRCUIT TEST SWITCHES. A test switch located on the NITROGEN FIRE SUPPRESSION panel at the flight engineer's station and a LAMP TEST switch located on the FIRE SUPPRESSION panel in the nose wheel well test the lamp and control circuits for their respective panels. The flight engineer's CAUTION LT test switch on the hydraulic systems control and indicator panel (figure 1-35) is used to test all the FSS indicator lights at the flight engineer's station. The pilot's caution lights test switch on the pilot's annunciator panel is used to test the FIRE WARNING light on the pilot's annunciator panel and the master CAUTION lights on the pilot's and copilot's instrument panels. The two-position test switch located on the NITROGEN FIRE SUPPRESSION panel at the flight engineer's station is used to test the circuits of the FSS system. The switch is spring-loaded to the center (OFF) position. When the switch is held in the "TEST" position, all zone alarm lights and the MASTER VALVES TEST light come on indicating that nitrogen is available and that a simulated voltage is applied to the master fire valves. The OPTICAL alarm lights on the FE1301 FIRE SUPPRESSION panel will also come on. When the test switch is released, all indicator lights will go off.

CAUTION

If the ARMED light is on, do not depress any zone discharge pushbutton or inadvertent discharge could occur.

The two-position test switch located on the FIRE SUPPRESSION panel in the nose wheel well is used to test the lamps on this panel. The switch is spring-loaded to the center (OFF) position. When the switch is held in the "LAMP TEST" position, the fire alarm lights in five of the six pushbuttons come on.

The two test switches described above use 28-volt DC power from the isolated DC bus (figure 1-64).

WARNING HORNS TEST SWITCH. A three-position warning horns test switch, located on the FE1301 FIRE SUPPRESSION panel at the flight engineer's station (figure 1-56B) is used to test the warning horns in the airplane. The switch is spring-loaded to the center (OFF) position. When the switch is held in the "HORN TEST" position, the warning horns in the forward cargo compartment and courier compartment will sound. When the switch is momentarily held in the "HORN SILENCE" position, sounding of the horns will stop. This test is accomplished

only on the ground because the fire warning horns do not sound in flight. When the airplane electrical system is energized while on the ground, the warning horns will sound automatically whenever the FSS detects a fire.

CARGO COMPARTMENT WARNING HORN SILENCE SWITCH. A two-position warning horn silence switch located on the FE1301 FIRE SUPPRESSION panel in the cargo compartment (figure 1-56B) is used to silence the warning horns when they begin sounding after a test has been initiated or if an actual fire warning has occurred. To test this function, the test switch on the NITROGEN FIRE SUPPRESSION panel is held in the "TEST" position, the horn test switch on the FE1301 FIRE SUPPRESSION panel at the flight engineer's station is held in the "HORN TEST" position and after the horns sound, the horn silence switch on the cargo compartment FE1301 FIRE SUPPRESSION panel is momentarily placed to "HORN SILENCE." The warning horns will become silent. The switch is then released to the spring-loaded "NORMAL" position.

ARMING SWITCHES. Three arming switches, located on three of the FSS control panel (figure 1-56B) are used to arm the FSS. When any one of the arming switches is placed to its respective arming position and the 28-volt isolated DC bus is energized, the nitrogen and FE1301 fire suppression discharge pushbuttons are armed for their associated panels.

Two, two-position ("PANEL SAFE," "ARM") arming switches are located, one each, on the flight engineer's and cargo compartment FE1301 FIRE SUPPRESSION panels. The switches are placed to and left in the "PANEL SAFE" position during FSS fire detection operation. If fire suppression is required, either arming switch may be placed to the "ARM" position. This action arms all FSS discharge pushbuttons for its associated panel.

One, two-position ("PANEL SAFE," "POWER/ARM") switch is located on the FIRE SUPPRESSION panel in the nose wheel well. This switch is placed to, and left in the "PANEL SAFE" position during FSS fire detection operation. If fire suppression is required, the arming switch is placed to the "POWER/ARM" position. This action arms all FSS discharge pushbuttons on this panel. If the 28-volt isolated DC bus is not energized, the discharge pushbuttons on this panel can be armed by placing the arming switch to the "POWER/ARM" position. Under this situation, 28-volt DC power comes directly from the airplane normal battery and is applied to the CPU and only the discharge pushbuttons on the nose wheel well FIRE SUPPRESSION panel are armed.

NITROGEN DISCHARGE PUSHBUTTONS. Twelve nitrogen discharge pushbuttons, located on the NITROGEN FIRE SUPPRESSION panel at the flight engineer's station discharge nitrogen into their associated fire zones. Four nitrogen discharge pushbuttons located on the FIRE SUPPRESSION panel in the nose wheel well, are used to discharge nitrogen into 9 fire zones (figure 1-56C).

Note

When the airplane is on the ground, nitrogen cannot be discharged into open wheel wells.

Before nitrogen can be discharged, these panels must be armed. Arming is accomplished by placing the arming switch on the affected panel to its respective "ARM" position. When the panels are armed, nitrogen can be discharged into a specific zone by depressing the nitrogen discharge pushbutton on the affected panel.

Nitrogen should be discharged under any of the following conditions:

1. When a fire zone alarm light comes on, indicating that a fire has been detected.

2. When a fire zone alarm light does not come on but a fire is suspected or smoke is visible.

3. To flood a fire zone because of leakage of hazardous liquids or if a wheels up landing is anticipated.

When a discharge pushbutton is depressed on the NITROGEN FIRE SUPPRESSION panel at the flight engineer's station, the DISCHARGE light in the pushbutton and the FLOW light on the panel come on, both master fire valves open and the appropriate zone fire valve opens. If the fire is extinguished, the affected fire zone alarm light will go off if heat is reduced sufficiently. The FLOW light and the DISCHARGE light in the pushbutton go off after the discharge cycle is completed. If the fire zone alarm light does not go off after the FLOW and DISCHARGE lights have gone off, additional nitrogen can be discharged by again depressing the pushbutton.

When one of the four nitrogen discharge pushbuttons, on the FIRE SUPPRESSION panel in the nose wheel well, is depressed, both master fire valves open, the fire valves for the indicated fire zone also open and nitrogen is discharged into that zone. The following four nitrogen discharge pushbuttons, located on the nose wheel well panel control only the zone fire valves listed below:

DISCHARGE PUSHBUTTON	ZONE FIRE VALVES
Left Wing	1 and 2
Right Wing	3 and 4
Underfloor Fwd	6, 7, 11 and 12
Underfloor Aft	10

Note

Additional information on nitrogen fire suppression zones and controls is found in figure 1-56C in this section.

If a fire warning light was on when a discharge pushbutton was depressed, and the fire goes out, the fire zone alarm light should go off. If the light stays on more than one minute after the discharge pushbutton was depressed, depress the pushbutton again.

Nitrogen Fire Suppression Subsystem Indicators.

Warnings of overheat or fire in the nitrogen fire suppression zones (figure 1-56C) are indicated by lights at the pilots' station, at the flight engineer's station and in the nose wheel well. On the ground, a warning horn will sound in the cargo compartment and in the courier compartment. The fire warning lights receive 28-volt DC power from the isolated DC bus (figure 1-64). The FSS warning horns receive 28-volt DC power from the emergency DC bus (figure 1-61).

PILOT'S FIRE WARNING INDICATORS. A FIRE WARNING light on the pilot's annunciator panel (figure 1-128) and the master caution lights on the pilots' instrument panels (figures 1-9 and 1-11) flash when an overheat or a fire has been detected.

FLIGHT ENGINEER'S FIRE WARNING INDICATORS. A FIRE WARNING light on the flight engineer's annunciator panel (figure 1-56B) and the appropriate fire zone alarm lights on the NITROGEN FIRE SUPPRESSION panel (figure 1-56B) come on steady when a fire has been detected. Each fire zone alarm light is labeled to identify the fire zone involved.

NOSE WHEEL WELL NITROGEN FIRE ALARM INDICATORS. Four fire zone alarm lights on the nose wheel well nitrogen FIRE SUPPRESSION panel (figure 1-56B) come on steady when overheat or fire is detected in the fire zone or zones monitored by these lights.

The following four fire zone alarm lights monitor only the fire zones listed below:

FIRE ZONE ALARM LIGHTS	FIRE ZONES
Left Wing	1 and 2
Right Wing	3 and 4
Underfloor Fwd	6, 7, 11 and 12
Underfloor Aft	10

Note

Additional information on nitrogen fire suppression zones and indicators is found in figure 1-56C in this section.

FE1301 FIRE SUPPRESSION SUBSYSTEM.

FE1301, a bromotrifluoromethane liquid fire suppressing agent, is used for suppressing fires in the avionics compartment, the center wing area (environmental and center wing box) and in the cargo compartment. The liquid is contained in 20 spherical bottles pressurized to 350 PSI. There is one 10-pound bottle in the avionics compartment, two 70-pound bottles in the center wing area and seventeen 70-pound bottles in the cargo compartment.

The agent is released by an electrical signal which fires an explosive squib on each bottle. The squib drives a cutter that ruptures a diaphragm which releases the entire charge of FE1301 in less than one second.

WARNING

Do not remain in FE1301 atmosphere without an oxygen mask. The gas is not toxic but it is an irritant, especially to the eyes and nose. In addition, toxic combustion by-products may be present, and exclusion of breathable airway result in suffocation of personnel.

WARNING

When the FE1301 agent is discharged into the cargo compartment, restrictions to visibility can exist throughout the cargo compartment for approximately two minutes. The visibility is so restricted that personnel movement would probably result in personal injury, and personnel being airlifted in the cargo compartment could be unable to don the individual oxygen masks located under the seats. If time and conditions permit, troops being airlifted in the cargo compartment should be instructed to don oxygen masks prior to discharge of the FE1301 agent.

FE1301 Fire Suppression Subsystem Controls.

Controls for testing, arming and discharging FE1301 are located on five control and indicator panels (figure 1-56B).

LAMP AND CONTROL CIRCUIT TEST SWITCHES. The three test switches used for testing the FE1301 fire suppression subsystem control and indicator panel lamps are described in the "Nitrogen Fire Suppression Subsystem Controls" portion of this section.

ARMING SWITCHES. The three arming switches used for arming the FE1301 Fire Suppression Subsystem are described in the "Nitrogen Fire Suppression Subsystem Controls" portion of this section.

CARGO VOLUME SELECTOR SWITCH. The CARGO VOLUME SELECTOR switch (figure 1-56B) is used to control the number of FE1301 bottles that will discharge into the cargo compartment. The switch is set to the position that indicates the volume of cargo loaded.

When the "UNDER 10,000 CU FT" position is selected, all 17 bottles in the cargo compartment are selected for discharge. When the "10,000 TO 20,000 CU FT" position is selected, 13 bottles are selected for discharge. When the "OVER 20,000 CU FT" position is selected, nine bottles are selected for discharge. If agent is discharged with the switch in the "OVER 20,000 CU FT" position, additional four bottles can be selected for discharge by selecting the "10,000 TO 20,000 CU FT" position. Four more bottles can be selected for discharge by selecting the "UNDER 10,000 CU FT" position.

The CARGO VOLUME SELECTOR switch receives 28-volt DC power from the isolated DC bus (figure 1-64). If the isolated DC bus is not energized, the switch receives 28-volt DC power from the normal battery whenever the arming switch on the FIRE SUPPRESSION panel in the nose wheel well is placed to the "Power/ARM" position.

FE1301 DISCHARGE PUSHBUTTONS. Three FE1301 discharge pushbuttons, located on the FE1301 FIRE SUPPRESSION panel at the flight engineer's station, three FE1301 discharge pushbuttons located on the FE1301 SUPPRESSION panel in the cargo compartment and one FE1301 discharge pushbutton located on the FIRE SUPPRESSION panel in the nose wheel well are used to discharge FE1301 fire suppression agent to the avionics compartment, center wing area and the cargo compartment. When the FE1301 discharge pushbutton on the nose wheel well is depressed, all the bottles in the avionics compartment and center wing are discharge. However, only those bottles selected by the CARGO VOLUME SELECTOR switch will discharge in the cargo compartment.

Before FE1301 can be discharged, the panels must be armed. Arming is accomplished by placing any of the three arming switches (figure 1-64) to their respective arming positions. This causes the ARMED light on the FE1301 FIRE SUPPRESSION panel at the flight engineer's station to come on. When a panel is armed, FE1301 can be discharged only from that panel by depressing any FE1301 discharge pushbutton. FE1301 is usually discharged under one of the following conditions:

1. When a fire zone alarm light comes on, indicating that a fire has been detected.

2. When a fire zone alarm light does not come on but a fire is suspected or smoke is visible.

The six discharge pushbuttons on the two FE1301 FIRE SUPPRESSION panels receive 28-volt DC power from the 28-volt isolated DC bus (figure 1-64). The FE1301 discharge pushbutton on the nose wheel well panel receives 28-volt DC power from the 28-volt isolated DC bus if it is energized. If the bus is not energized, the panel can be armed with 28-volt DC power directly from the airplane normal battery by placing the arming switch on the panel to the "POWER/ARM" position.

FE1301 Fire Suppression Subsystem Indicators.

Warnings of fire in the FE1301-protected areas of the airplane (figure 3-1) are indicated by lights at the pilots' station, at the flight engineer's station, in the cargo compartment and in the nose wheel well (figure 1-56B). On the ground, a warning horn will sound in the cargo compartment and in the courier compartment. The fire warning lights receive 28-volt DC power from the isolated DC bus (figure 1-64). The warning horns receive 28-volt DC power from the emergency DC bus (figure 1-61).

PILOT'S FIRE WARNING INDICATORS. A FIRE WARNING light on the pilot's annunciator panel (figure 1-128) flashes and the master caution lights on the pilots' instrument panels (figures 1-9 and 1-11) come on steady when a fire has been detected.

FLIGHT ENGINEER'S FIRE WARNING INDICATORS. A FIRE WARNING light on the flight engineer's annunciator panel (figure 1-56B) and the affected OPTICAL fire zone alarm lights on the FE1301 FIRE SUPPRESSION control and indicator panel (figure 1-56B) come on steady when a fire has been detected. The OPTICAL fire zone alarm lights are labeled AVIONICS, CTR WING and CARGO to identify the fire zone involved.

CARGO COMPARTMENT FIRE ALARM INDICATORS. The three OPTICAL fire zone alarm lights on the FE1301 FIRE SUPPRESSION panel in the cargo compartment are identical in legend and operation as those on the flight engineer's FE1301 FIRE SUPPRESSION panel.

NOSE WHEEL WELL FIRE ALARM INDICATORS. The indicator labeled CARGO CTR WING and AVIONICS on the FIRE SUPPRESSION panel in the nose wheel (figure 1-56B) comes on steady to indicate that a fire has been detected in one or more of the FE1301-protected areas.

EMERGENCY EQUIPMENT.

For the location of emergency equipment, see figure 3-1.

EMERGENCY EXIT LIGHTS.

See the Emergency Exit Lights paragraph in this section.

SELF-LUMINOUS EXIT SIGNS AND MARKERS.

On 68307, 70167, 70168 and 70170 thru 80224, A self-luminous exit sign is installed above the crew entrance door, number 5 service door, each stairwell, and each troop door. Self-luminous markers are located adjacent to or on each emergency exit.

LIFERAFTS AND SURVIVAL KITS.

Four 25-man liferafts with integral survival kits (9, figure 3-1) are provided and installed in the airplane.

One liferaft is installed in the relief crew courier compartment under the No. 2 escape hatch. This liferaft is normally raised automatically for deployment by an air-driven winch and cable system. It can also be raised to this position manually by a hand winch and cable system.

Three liferafts are installed in the troop compartment. They are installed one each aft of the No. 3 right and No. 4 emergency exits, and one aft of the No. 6 emergency exit (service door). These liferafts are manually positioned for deployment and thrown overboard through these exits.

Relief Crew Liferaft Release Handle.

A liferaft deployment handle is used to release a tie-down lock and to initiate the automatic hoisting of the liferaft in the relief crew compartment, by a simple pull on the handle. The handle is located on the aft side of the No. 2 escape hatch opening.

FLIGHT STATION ESCAPE DESCENT REELS.

Flight station escape descent reels (figure 3-7) are attached to airplane structure in the flight station area. Fifteen of them are stowed in recesses along the aisle adjacent to the No. 2 escape hatch, seven are stowed below the No. 1 escape hatch and one each is stowed in the pilot's and copilot's side console.

The escape descent reels are immediately useable and require no adjustment for the user's weight, height, or control action. The reels are used when normal egress from the flight station and relief crew area or escape slide egress is not possible.

When stowed in the recess, the exposed handle can easily be grasped with a single hand. Latches in the stowage container prevent the descent reel from being released until the handle is extracted from it. Pulling sharply on the handle releases the unit from the stowage container and allows the handle to telescope for two-handed gripping.

The most natural descent technique to use is a two-handed grip on the device, with the user facing inboard as he slides down along the fuselage.

WARNING

The escape descent reel is designed to exert minimal braking effect for the first 10 to 15 feet of descent. After the first 10 to 15 feet of descent, the braking effect increases and remains constant for the remainder of the descent.

ESCAPE SLIDES.

Five self-inflatable escape slides (10, figure 3-1) are normally installed in the airplane. One slide is installed in the relief crew/courier compartment and is located in a recess aft of the No. 5 emergency exit. Four of the slides are installed in the troop compartment at the following locations: one each at the No. 3 left, No. 3 right, and No. 4 emergency exits, and one near the No. 6 emergency exit.

When the cargo compartment palletized seat kit is installed, two additional self-inflatable escape slides are installed as part of the kit. They are located at the No. 7 left and right emergency exits (left and right troop doors).

The slides are contained in a rigid case attached to the airplane structure by means of a girt bar. The escape slides are equipped with light strips (figure 3-6) that light up automatically when the slide is inflated. The slides are equipped with an air reservoir to provide pressure for inflating the slides. A reservoir gage on the bottle indicates reservoir pressure. This pressure must be maintained within the temperature ranges shown in figure 1-133. The slides are also equipped with four "no fail" handles, two on each side of the lower end of the slide. Should the slides fail to inflate, two men must be stationed on each side of the slide to grasp the "no-fail" handles, -pull tight and hold the slide at waist height. The slide can then be used as an apron chute for emergency egress.

ESCAPE ROPES.

Eight escape ropes (7, figure 3-1) are provided in the airplane. They are attached at one end to the airplane structure and are stowed in recessed compartments in the compartment trim.

Five ropes are installed in the troop compartment, one at each of the four emergency exits, and one directly above the compartment stair ladder.

Three ropes are installed in the cargo compartment, one each at the crew entrance door, and left and right troop doors.

FLIGHT STATION SECONDARY ACCESS ROPE LADDER.

A rope ladder (14, figure 3-1) is mounted on a structural member under the courier compartment floor adjacent to the access hatch. The ladder is stowed in a quick release cover and may be released from the flight deck or cargo deck by pulling either of two manual release handles (15, figure 3-1). The handle for releasing the ladder from the flight deck is located at the access hatch above the ladder quick release cover. The handle for releasing the ladder from the cargo deck is located on the right hand side of the airplane in a recess in the trim approximately 6 1/2 feet above the floor. When released, the ladder extends to the cargo compartment floor and then is attached to the tie-down rings. Tensioning of the ladder is accomplished by a device attached to the bottom of the ladder.

CRASH AXES.

Three crash axes (11, figure 3-1) are provided in the upper deck compartments. One is stowed in the emergency equipment recess aft of the flight engineer's position, one is stowed adjacent to the service entry door (No. 5), and one is stowed on the coat closet in the troop compartment.

FIRST AID KITS.

Twenty first aid kits (5, figure 3-1) are provided in the upper deck compartments. Two kits are located at the flight station in the emergency equipment recess area aft of the flight engineer's position, two kits are located in the emergency equipment access area just aft and inboard of the relief crew area service door, and one kit is located in the recess on the aisle wall of the courier compartment coat closet. Provisions for 15 kits are located in the troop compartment. Eight kits are stowed on the aft wall of the lavatory and seven on the forward wall of the galley.

On 70168, 00453 and up and airplanes modified by T.O. 1462, two first aid kits are installed in the cargo compartment. One kit is located adjacent to and aft of the crew entrance door and the other is located adjacent to and forward of the right troop door.

FIRE EXTINGUISHERS.

Twelve type A-20 hand fire extinguishers (4, figure 3-1) are installed in the airplane. Four are installed in the following locations: one is installed in the flight station emergency equipment access area aft of the flight engineer's position, one is installed in a recessed area in the relief crew area coat closet, one is installed in a recessed area in the aisle wall of the relief crew area baggage compartment, and one is installed in a recessed area in the aisle wall of the courier compartment coat closet.

Six extinguishers are installed in the cargo compartment one under each of the portable oxygen bottles. A trigger-type handle located at the top of the extinguisher permits it to be operated with one hand. The extinguisher is charged with bromochloromethane and is pressurized to approximately 165 PSI. The extinguisher has a one-quart capacity. The maximum horizontal range of the extinguishing agent during discharge is 20 feet. Two extinguishers are installed in the troop compartments, one on the aft wall of the lavatory and one on the forward wall of the galley.

FIRE FIGHTER'S MASKS.

Twelve fire fighter's masks are provided in the airplane. They are part of the MB-1 portable oxygen bottle unit (1, figure 3-1). The combination oxygen and fire fighter's mask is stowed in a pouch that is attached to the oxygen bottle with straps. The mask is used in the same manner described in the Oxygen system portion of this section. The masks contain an integral microphone unit that uses any one of the microphone extension cords.

Six of the masks and oxygen bottles are installed in the cargo compartment; three on each side, at shoulder height, along the length of the compartment. One is installed behind the pilot on the forward side of the navigator's workstation, one is installed behind the copilot on the forward side of the flight engineer's work station, one is installed in the flight station emergency equipment access area, one is located in a recessed cubicle in the aisle between the two bunk compartments, one is located in a recessed cubicle across from the relief crew area left-side emergency exit, and one is installed in the troop compartment on a frame (right side).

On airplanes modified by T.O. 1263, an additional bottle, equipped with a fire fighter's oxygen mask is located on the aft right side of the troop compartment on the floor next to the loadmaster's outboard seat.

SMOKE GOGGLES.

Four smoke goggles (3, figure 3-1) are provided for the four active flight crew members in the flight station. These goggles are stowed in the pilots' consoles and at the navigator's and flight engineer's stations.

OXYGEN MASK STOWAGE PROVISIONS.

Personal oxygen mask stowage is provided in eleven open compartments in the flight station and bunk areas. The location of each compartment is as follows: two are located in the pilot's side console, one in the copilot's side console, one under the navigator's work table next to the oxygen regulator, one under the flight engineer's work table, and one next to each bunk oxygen regulator.

LIFE VEST STOWAGE PROVISIONS.

Stowage for twenty lifevests (figure 3-1) is provided by pouches attached to the backs of each flight station crew seat, and under each seat in the relief crew area and courier compartment seats.

When the seat kit is installed in the troop compartment, and palletized seats are installed in the cargo compartment, stowage for life vests is provided in pouches attached to the back of the seats.

ANTI-EXPOSURE SUIT STOWAGE PROVISIONS.

Stowage for anti-exposure suits (figure 3-1) is provided by pouches attached to the back of each seat in the flight station, relief crew area and courier compartment.

WAR READINESS MATERIAL KIT STOWAGE PROVISIONS.

Information will be supplied if a stowage area is provided at a later date.

CREW ENTRANCE.

The crew entrance door and flight station ladder provide a means of gaining entrance to the forward end of the cargo compartment and to the flight station. The crew entrance door is the forward entrance door on the left side of the fuselage and opens outward and down. The flight station ladder extends from the flight deck down to the left cargo compartment walkway in line with the crew entrance door (figure 2-1). The crew entrance door contains an entrance ladder, consisting of an upper section, that is an integral part of the door, and a lower section, that is adjustable to three airplane kneeling positions. The ladder automatically extends when the door is opened. The lower section of the ladder is actuated by a hydraulic screw-nut actuator. The rotary motion of the actuator turns a pulley that in turn operates a closed-loop cable system. The ladder is cantilevered and normally does not touch the ground. If the airplane is kneeled without retracting the ladder, no structural damage occurs to the ladder because hydraulic fluid is displaced to allow the ladder to partially retract. The ladder is adjustable to three positions: fully kneeled, level kneeled, and static position and aft kneeled. The upper handrail is stowed against the ladder when the door is closed and extends automatically when the door is opened. The lower handrail is erected only in the airplane unkneeled position. The door is held closed by hydraulically locking ten hooks located in the side door frames

The door hooks are designed so that the lock actuator is prevented from unlatching the hooks above 4 PSI internal pressure on the door, if it is inadvertently actuated. When the door is closed, the ten hooks lock the door against a rubber bulb seal.

When the door is in the closed position, the bottom door latching hook on either side of the door actuates switches to provide the flight crew with an electrical check of the door position. When these switches are actuated, warning lights illuminate or extinguish to inform the crew that the door is unlocked or locked.

Entrance to the flight station is accomplished by using a two-piece retractable ladder. The ladder is hydraulically operated and follows a track on the fuselage that guides it to its retracted or extended position. The crew entrance door and the flight station ladder operate with hydraulic power from hydraulic system No. 4.

CREW ENTRANCE DOOR AND FLIGHT STATION LADDER CONTROLS.

Crew Entrance Door Controls Access Covers.

An external and internal crew entrance door control access cover (figure 2-1) covers the door operating controls. When opened and raised, the inside cover releases the crew entrance door operating control knob permitting the crew entrance door control valve to be operational.

Note

The internal door control access cover is connected through linkage and locks or unlocks the actuator lock.

Crew Entrance Door Ladder Position Lever.

A crew entrance door ladder position lever (figure 2-1) is used to select three ladder extension positions. These positions are: "FULL KNEEL," "LEVEL KNEEL" and "STATIC POSITION AND AFT KNEEL." After the lever is placed to the desired position, the door operating lever may be pulled down to open the door.

Crew Entrance Door Operating Control Knob.

A three-position ("OPEN", "NEUT" "CLOSE") crew entrance door operating lever push-pull control knob (figure 2-1) is used to open or close the door. The door will operate on hydraulic system No.4 pressure or from an accumulator. After the ladder position lever is placed to the desired position, the door operating lever is pulled down, the door opens and the entrance ladder extends to the preselected position. The door opening and ladder extension sequence takes approximately 20 seconds.

Crew Entrance Door Hydraulic Handpump.

An external hand-operated hydraulic pump (figure 2-1) is actuated to open the door and extend the ladder, or close the door and retract the ladder, if the hydraulic pressure in the door hydraulic system is depleted.

Crew Entrance Door Mechanical Lock.

On 70168, 00449 and up and airplanes modified by T.O. 1476, a mechanical lock is installed over the crew door lock actuator rod after the door is closed. This mechanical lock prevents the actuator

from retracting and unlocking the door. The mechanical lock must be removed before the door can be opened with the OPERATING LEVER or EMERGENCY EGRESS HANDLE. A hydraulic failure which would tend to unlock the crew entrance door will jam the mechanical lock against the door lock actuator. If this occurs, the force required to remove the mechanical lock will exceed forty pounds.

Crew Entrance Door Emergency Egress Handle.

An EMERGENCY EGRESS HANDLE (figure 2-1) is used to retract the door locking actuator and unlatch the door hooks. The EMERGENCY EGRESS handle is pulled down to unlatch the door hooks. The crew entrance door can then be pushed open.

Flight Station Ladder Operating Handles.

Hydraulic operation of the ladder is accomplished from the ladder controls located at the bottom of the ladder in the cargo compartment. The operating handle at the top of the ladder manually releases the ladder uplocks which allows the ladder to free-fall to the extended position.

To lower or raise the ladder from the cargo compartment, the ladder lock release handle (blue) is placed to the "UPLOCK" or "DN LOCK" position and the ladder operate handle (black) is placed in the "LOWER LADDER" or "RAISE LADDER" position. After the ladder is locked in the selected position, both handles are returned to the "NEUTRAL" position.

CREW ENTRANCE DOOR INDICATORS.

Door Position Indicator Lights.

A PRESS DOOR OPEN indicator light on the pilots'and flight engineer's annunciator panels and the NOT LKD legend in the CREW DOOR indicator light on the DOOR LOCK STATUS portion of the LH FORWARD LOADMASTER CONTROL panel come on whenever the crew entrance door is unlocked or open.

In the event a door open indication is the result of an electrical malfunction, the CREW DOOR indicator light assembly should be depressed, causing the crew entry door warning circuit to be bypassed from the door warning system. The PRESS DOOR OPEN lights will go off and the NOT LKD light will remain on as long as the unlocked signal is present. The BYPASS light will come on and remain on until the light assembly is depressed again.

The lights receive 28-volt power from the main DC bus No. 2 through a circuit breaker on the flight engineer's No. 5 circuit breaker panel (figure 1-67).

CREW ENTRANCE DOOR AND FLIGHT STATION LADDER NORMAL OPERATION.

Normal door and flight station ladder operation is accomplished by a mechanically actuated and hydraulically operated system. The door is opened from the outside by unlatching an access cover, located approximately one foot below and aft of the entrance door sill, actuating a ladder position selector lever and a door operating push-pull knob contained in the recess. Similar controls, located on the inside of the airplane, to the aft of the door, are used for exit from the airplane.

The flight station ladder operation is accomplished by using two similar controls, one located aft of the normal crew entrance door controls and the other located on the aft side of the flight station ladder stairwell. See Section II for crew entrance door and flight station ladder operating procedures.

The door handrails are raised and lowered automatically as the door and lower ladder are actuated. The door handrail is raised in all three kneeling positions, but the lower ladder handrail is raised only in the unkneeled position.

In the event hydraulic power is not available in the airplane, a hydraulic accumulator, that is a part of the door hydraulic system, provides enough pressure and fluid volume to operate the door and ladder through one and a half cycles (open, close, open), or the hydraulic handpump can be used if the accumulator is depleted.

CREW ENTRANCE DOOR AND FLIGHT STATION LADDER EMERGENCY OPERATION.

On 70168, 00449 and up and airplanes modified by T.O. 1476, emergency operation of the crew entrance door is accomplished by removing the mechanical lock from the door lock actuator and pulling down on the EMERGENCY EGRESS handle and pushing out on the door. The door will free-fall to the open position. The lower ladder will not extend past the forward kneel position.

On 68304, 68307, 70167 and 70170 through 00448 not modified by T.O. 1476, emergency operation of the crew entrance door is accomplished by pulling down on the EMERGENCY EGRESS lever and pushing out on the door. The door will free-fall to the open position. The lower ladder will not extend past the forward kneel position.

Emergency extension is accomplished by placing the ladder lock release handle in the cargo compartment to the "UPLOCK RELEASE" position, or by pulling down on the handle at the top of the ladder.

TROOP COMPARTMENT STAIR LADDER.

An internal retractable stair ladder (figure 1-132) is provided for entry into the troop compartment from the cargo compartment. The ladder is operated by two hydraulic actuators mounted in the cargo compartment overhead structure. The actuators apply a force to a driver arm that is attached to the center hinge point on each side of the ladder. The lower end of the ladder is equipped with an adjustable foot that compensates for any attitude of the ramp. If the ladder is raised while the foot is in the down position, the foot automatically releases and retracts along the side of the ladder. On airplanes modified by T.O. 1640, the adjustable feet must be manually retracted and locked in place. When the ladder is raised, the upper half of the ladder moves in a vertical position along retaining tracks installed in the troop compartment while the lower section lays flat against the underside of the troop compartment floor. In the stowed position, the upper ladder handrails remain in the same position relative to the upper ladder section while the lower ladder handrails lay flat against the side of the lower ladder sections. An uplock is provided for the stowed position and is automatically engaged when the ladder reaches the stowed position. A guard rail and a gate surround the stairwell. The gate is locked in the down and up positions. Unlocking the gate and rotating it up and to the left engages the uplock on the left roller track assembly.

STAIR LADDER CONTROLS.

Operating controls for the stair ladder are located on a control panel installed on the left aft side of the cargo compartment opposite and aft of the ladder, behind the trim. A manual emergency uplock release is located on the safety fence in the tooop compartment. The lower controls in the cargo compartment consist of a control lever and a handpump. The upper control in the troop compartment is an uplock emergency release handle.

Troop Compartment Stair Ladder Control Lever.

The troop compartment ladder control lever is used to raise and lower the troop compartment ladder. When the ladder is raised, upward movement of the lever, from the neutral position, releases the downlock and raises the ladder. When the ladder is stowed, downward movement of the lever, from the neutral position, releases the uplock and the ladder begins to free-fall slowly to the extended position.

Troop Compartment Stair Ladder Control Hand Pump.

The hydraulic handpump is used to raise the ladder whenever hydraulic system No. 1 power is not available. Moving the control lever to the "UP & LOCK" position and actuating the handpump approximately 15 cycles will raise and lock the ladder in the stowed position.

Troop Compartment Stair Ladder Uplock Emergency Release Handle.

The troop compartment uplock emergency release handle is used to unlock and lower the ladder for emergency use only. This handle connot be used to raise the ladder. When the ladder is in the stowed position, pulling on the handle unlocks the ladder and allows the ladder to freefall to the fully extended position.

TROOP COMPARTMENT STAIR LADDER NORMAL OPERATION.

To raise the stair ladder using the controls in the cargo compartment, accomplish the following:

WARNING

Ensure there are no personnel standing in the stair ladder and inform personnel who may be in the troop compartment that the stair ladder is to be raised. Failure to comply could result in injury to personnel who may be unaware that the stair ladder is to be raised.

Note

The only way the stair ladder can be raised to its stowed position is by use of the controls in the cargo compartment.

1. No. 1 Hydraulic System - PRESSURIZED
2. Ladder Control Lever - UP & LOCK
   a. Downlock - RELEASED
   b. Uplocks - NO MOVEMENT
   c. Adjustable Feet - RETRACTED

On airplanes modified by T.O. 1640, remove the adjustable feet locking pins, retract the feet and reinsert the locking pins in the bottom hole in the feet.

   d. Ladder - STOWED
   e. Uplocks - ENGAGED
3. Ladder Control Lever - NATURAL

To lower the stair ladder using the controls in the cargo compartment, accomplish the following:

WARNING

Ensure that the cargo compartment floor below the stair ladder is clear of personnel and cargo before attempting to lower the stair ladder. Failure to comply could result in injury to personnel and damage to the stair ladder and/or cargo.

If personnel are in the troop compartment, ensure the guard gate is closed and locked and that they are informed that the stair ladder is to be lowered before attempting to lower the stair ladder. Failure to comply could result in injury to personnel.

1. Stair Ladder Hydraulic System - PRESSURIZED

Pressurize the ladder hydraulic system by using the No. 1 hydraulic system or the hydraulic hand pump.

2. Ladder Control Lever - UP & LOCK

Prior to lowering the ladder, momentarily place the ladder control handle to the UP & LOCK position. Observe that a perceptible movement in the up direction occurs. This action assures that the up actuators are pressurized. When the ladder is subsequently lowered, a slow free-fall rate will occur.

CAUTION

If the ladder control handle is placed to DOWN, without first placing it to UP & LOCK, the free-fall rate may be fast enough to damage the ladder.

3. Ladder Control Lever - DOWN

a. Uplocks - RELEASED

b. Ladder - DESCENDS TO DEPLOYED POSITION.

Note

The ladder descends by force of gravity. Rate of descent is regulated by restricting flow of hydraulic fluid.

c. Downlock - ENGAGED

Visually check that downlock is engaged.

d. Adjustable Feet - DOWN AND LOCKED

Manually extend the adjustable feet to the down and locked position.

On airplanes modified by T.O. 1640, remove the locking pins, manually extend the adjustable feet to a position that will ensure positive contact with the cargo floor and then re-insert the locking pins. It may be necessary to grasp the ladder and raise it slightly to re-insert the locking pins.

CAUTION

Before using the ladder, the retractable feet must be extended and locked in place. Failure to do so could damage the ladder.

4. Ladder Control Lever - NEUTRAL

To lower the stair ladder using the emergency release handle in the troop compartment, accomplish the following:

WARNING

Ensure that the cargo compartment floor below the stair ladder is clear of personnel and cargo before attempting to lower the stair ladder. Failure to comply could result in injury to personnel and damage to the stair ladder and/or cargo.

Note

This procedure shall only apply during an emergency. During flight, the stair ladder will not be in the raised position when the troop compartment is occupied.

1. Troop Compartment Stair Ladder Emer Ladder Rel Handle - PULL

a. Ladder - DESCENDS TO DEPLOYED POSITION.

Note

The ladder descends by force of gravity. Rate of descent is regulated by restricting flow of hydraulic fluid.

b. Downlocks - ENGAGED

c. Adjustable Feet - DOWN AND LOCKED

If emergency conditions and time permit, manually extend the adjustable feet to the down and locked position.

On airplanes modified by T.O. 1640, remove the locking pins, manually extend the adjustable feet to a position that will ensure positive contact with the cargo floor and then re-insert the locking pins. It may be necessary to grasp the ladder and raise it slightly to re-insert the locking pins.

2. Troop Compartment Stair Ladder Emer Ladder Rel Handle - RELEASE

TROOPCOMPARTMENT STAIR LADDER ALTERNATE OPERATION.

In the event the No. 1 hydraulic system is inoperative, the ladder may be raised by a hydraulic handpump and lowered in the normal manner.

To raise the ladder with the handpump, accomplish the following:

1. Ladder Control Lever - UP POSITION AND HOLD

   a. Downlock - RELEASED

2. Hydraulic Handpump - ACTUATED

   a. Adjustable Feet - RETRACTED

On airplanes not modified by T.O. 1640, check that the adjustable feet have automatically retracted into the side rails of the ladder before raising the ladder any further.

Note

If the adjustable feet do not retract check out the reason for non-retraction of the feet before continuing to raise the ladder.

On airplanes modified by T.O. 1640, remove the adjustable feet locking pins, retract the feet and reinsert the locking pins in the bottom hole in the feet.

   b. Ladder - STOWED

Continue operating the handpump until the ladder is up and locked.

   c. Ladder Control Lever - NATURAL

3. Handpump Handle - STOWED

SEATS.

PILOT'S AND COPILOT'S SEATS.

The pilot's and copilot's seats (figure 1-130) are installed on tracks. Controls provide forward and aft, lateral, vertical and reclining position adjustments. Each seat is equipped with an adjustable and removable headrest, a safety belt, and a shoulder harness. The armrest of each seat can be raised and stowed to a position parallel to the back of the seat during seating or exit. A zipper installed on each side of the lower portion of the backrest cushion can be opened to adjust the lumbar and spinal support pad by moving it up or down.

Armrest Control.

The armrest can be raised by lifting up on the armrest. An armrest control (2, figure 1-130), located under the front of each armrest, is pulled forward to lower the armrest to the desired height.

Seat Recline Adjustment Lever.

The seat is reclined by a lever (3, figure 1-130). This lever is located below the left (or right) armrest on the seat cushion frame. Leaning back on the backrest while the lever is pulled up reclines the backrest. When the desired position is reached, releasing the lever locks the backrest. The backrest is spring-loaded to the forward position.

Shoulder Harness Lock Lever.

A two-position shoulder harness inertia reel lock lever (4, figure 1-130) is located directly below and outboard of the left corner of the seat cushion frame. Pushing aft on the lock lever unlocks the inertia reel and the reel harness cable extends allowing the occupant to lean forward. If a forward two- or three- "g" force is encountered while the inertial reel is unlocked, the reel automatically locks. When the reel is locked in this manner, it remains locked until the lock lever is moved forward to the locked position and then returned aft to the unlocked position. When the lock lever is in the (forward) position, the reel harness cable is manually locked so that the occupant is prevented from bending forward.

Seat Vertical Adjustment Lever.

Vertical movement of the seat is accomplished by actuating a tab-type adjustment lever (5, figure 1-130). This lever is located under the front center portion of the seat cushion frame. Pulling up on the lever unlocks the seat support posts, allowing up and down adjustment of the seat. Releasing the lever locks the seat in the position desired.

Seat Fore, Aft, And Lateral Adjustment.

Fore, aft and lateral movement of the seat is accomplished by an adjustment lever (6, figure 1-130). This lever is located below the right (or left) arm rest on the seat assembly support frame. Pushing forward or aft on the lever unlocks the seat allowing the seat to roll forward or aft. When the lever is released, the seat locks in the selected position. Total fore and aft travel is available only when the seat is locked in the normal inboard position. In the outboard position, forward travel of the seat is restricted by the forward stop, and the seat cannot be positioned to the full forward position. The seat should be repositioned from the full aft and outboard position by sliding the seat to the inboard locked position and then moved forward to the desired position.

CAUTION

Do not attempt to force the seat beyond the forward stop, damage to the adjustment mechanism may result.

Pushing outboard or pulling inboard on the lever unlocks the fore and aft seat track and allows lateral adjustment of the whole seat and track assembly. Pushing the lever outboard allows seat movement outboard and pulling the lever inboard allows seat movement inboard. Releasing the lever locks the seat in the inboard or outboard position. The seat cannot be moved laterally out of the inboard position when the seat is more than 12.25 inches forward of the extreme aft position.

CAUTION

The adjustment lever must be held in the fully unlocked position while the seat is being moved fore, aft, or laterally. Failure to comply will allow the locking pins to drag on the seat tracks during seat adjustment and result in undue track wear.

NAVIGATOR'S AND FLIGHT ENGINEER'S SEATS.

The navigator's and engineer's stations are equipped with 180-degree-swivel, vertically and horizontally adjustable seats (figure 1-130) which can be moved inboard or outboard to provide adjustment at the tables. The seats are equipped with seat belts, shoulder harness, headrests, and movable arm rests. The arm rests on each seat can be raised, pivoted, and stowed in a position behind the back of the seat during seating or exit. A zipper installed on each side of the lower portion of the backrest cushion can be opened to adjust the lumbar and spinal support pad by moving it up or down.

Armrest Control.

The armrests can be raised by lifting up on the armrest. An armrest control (2, figure 1-130), located under the front of each armrest, is pulled forward to lower the armrest to the desired height.

Seat Recline Adjustment Lever.

The seat is reclined by pulling up on the lever (3, figure 1-130) located below the left armrest on the seat cushion frame. Leaning back on the backrest while the lever is pulled up reclines the seat. Releasing the lever locks the backrest in the desired position. The backrest is spring-loaded to the forward position.

Shoulder Harness Lock Lever.

A two-position shoulder harness inertia reel lock lever (4, figure 1-130) is located directly below and outboard of the left corner of the seat cushion frame. Pushing aft on the lock lever unlocks the inertia reel and the reel harness cable extends allowing the occupant to lean forward. If a forward two- or three-"g" force is encountered while the inertia reel is unlocked, the reel automatically locks. When the reel is locked in this manner, it remains locked until the lock lever is moved forward to the locked position and then returned aft to the unlocked position. When the lock lever is in the locked forward position, the reel harness cable is manually locked so that the occupant is prevented from bending forward.

Seat Horizontal And Swivel Adjustment Knob.

Horizontal movement of the seat is accomplished by an adjustment knob (5, figure 1-130). This knob is located on the right side of the seat on the forward upper corner of the seat cushion frame. Pushing forward on the knob unlocks the seat allowing the seat to roll horizontally on the seat tracks. When the knob is released, the seat locks in the selected position. Rotating this same knob forward unlocks the seat from the seat post allowing the seat to swivel 90 degrees to the left or right in increments of 30 degrees. When the knob is released, the seat locks in the desired position.

Seat Vertical Adjustment Lever.

Vertical movement of the seat is accomplished by actuating a lever (6, figure 1-130). This lever is located on the lower aft right side of the seat cushion frame. Pulling up on the lever unlocks the seat support posts, allowing up and down adjustments of the seat. Releasing the lever locks the seat in the position desired.

OBSERVER'S SEAT.

An observer's seat is provided on lateral tracks that are installed behind the pilot and copilot's seats. These tracks allow the observer to move laterally between the pilots' stations. The observer's seat is identical to the navigator's and flight engineer's seats, except that an additional control is provided for lateral seat adjustment. No headrest is provided. This lateral adjustment lever (7, figure 1-130) is located aft of the vertical adjustment lever. Pulling up on the lever releases the locking pin so that the seat carriage can be moved laterally. The locking pin is spring-loaded. Releasing the lever permits the pin to lock in the detent and locks the seat in the selected position.

CAUTION

Do not force the lateral seat positioning lever down to lock the seat. To do so may cause damage to the seat control mechanism.

STUDENT/INSTRUCTOR SEATS.

Two foldable student/instructor seats are provided in a special mission kit for the airplane. They are stowed behind the three relief crew area seats on the right side of the relief crew compartment. When the

seats are unfolded, quick disconnect pins are installed to make the legs rigid. The seats are installed to the right of the navigator's and flight engineer's stations on special floor fittings that unscrew one-quarter turn and pop up above the floor level. The seat posts are set on the fittings and are secured by a locking collar that slips down over the fitting. A knurled ring is hand-tightened to remove looseness between the collar and the floor fitting. These seats are stressed for all flight conditions and can be occupied during take-offs and landings.

MISCELLANEOUS EQUIPMENT.

Miscellaneous equipment consists of lavatory and galley facilities, relief crew work table, comfort pallets, protective covers, blackout curtains, signal light stowage, loose equipment stowage boxes, let-down chart holders, UHF frequency card holders, scroll checklist holders, personnel advisory signs, and pressure door upper hinge lock blocks.

LAVATORY FACILITIES.

Lavatory facilities for the crew and passengers are provided by a lavatory/toilet compartment on the right side of the airplane aft of the relief crew area seating. The toilet area of the compartment consists of an electrically flushed toilet, one hand grip at toilet, toilet tissue holder, ash tray, fresh air outlet, provisions for a portable oxygen cylinder, a coat hook, a dome light located in the overhead panel, and an advisory light. The toilet area is separated from the rest of the compartment by a modesty curtain. The curtain is mounted on an overhead track and opens from either side for entry into the toilet area.

The flushing system dyes, disinfects, and deodorizes the filtered toilet waste and recirculates the processed fluid to flush the toilet bowl. A PRESS-TO-FLUSH pushbutton is mounted in the forward side of the wall behind the toilet. The other lavatory facilities consist of a urinal, one hand grip at urinal, wash basin, one hand grip at wash basin, a coat hook, towel dispenser, waste container, mirror, electric shaver outlet, ashtray, cornice light, and advisory RETURN TO SEAT annunciator.

Pressing the PRESS-TO-FLUSH pushbutton operates the flushing pump motor with power from the 115-volt AC monitor bus No. 2 (figure 1-70).

Wash water for the sink is drinkable and can be heated. The wash water is gravity fed through a push-button on each faucet and is drained from the sink by pressing the waste handle to the right of the two faucets.

COMFORT PALLETS.

Provisions are made for the installation of two galley/lavatory units in the forward end of the cargo compartment.

FLIGHT CREW GALLEY.

The flight crew galley, located on the flight deck between the crew lavatory and the courier compartment, is equipped to feed 20 people. It is also capable of dispensing drinking water and hot beverages throughout the mission. The galley provides the following equipment:

(1) A stainless steel work counter and sink

(2) A fiberglass refuse container

(3) A hot plate

(4) Two seven-gallon water tanks

(5) A six-ounce paper cup dispenser

(6) A paper towel dispenser

(7) A swing-away can opener

(8) A water cooler

(9) An electric control panel assembly

(10) Electric receptacles

(11) Work area lights

(12) Plumbing for water cooling and hot beverage unit

(13) Foul air vent and hood assembly

(14) Stowage facilities for one refrigerator, one oven, one hot beverage unit, one electrically heated food-warming cup, 20 reusable serving trays, 60 necessary packets, 150 six-ounce paper cups, 150 paper towels, 20 cans of soup, and miscellaneous nonperishable items.

The galley operates with 115/200-volt AC power from the No. 2 AC MONITOR BUS (figure 1-70). This power is routed to the electrical receptacles and to the control panel. The control panel contains the following components:

(1) A two-position ("ON," "OFF") MAIN POWER switch

(2) A 30-minute timer for the food warming cup

(3) A two-position ("ON," "OFF") HOT PLATE switch

(4) A two-position ("ON," "OFF") HOT BEV switch

(5) A two-position ("ON," "OFF") REFR switch

(6) A two-position ("ON," "OFF") WATER COOLER switch

(7) A two-position ("ON," "OFF") GALLEY LIGHT switch

(8) A dimming switch for the galley lights

(9) Eight circuit breakers

(10) Four green indicator lights, one each located above the food warming cup, refrigerator, water cooler switches, and main power switches.

TROOP COMPARTMENT GALLEY.

The troop compartment galley is located on the upper deck on the aft left side of the troop compartment. The galley is equipped to feed 75 troops. It is also capable of dispensing drinking water and hot beverages throughout the mission. The galley provides the following equipment:

(1) A stainless steel work counter and sink

(2) A plastic refuse container

(3) A hot plate

(4) A fifty-gallon water supply system consisting of one eight-gallon accumulator tank and one 42-gallon reservoir.

(5) A six-ounce paper cup dispenser

(6) A paper towel dispenser

(7) A swing-away can opener

(8) An electric control panel assembly

(9) Electric receptacles

(10) Work area lights

(11) Plumbing for water tanks and hot beverage unit

(12) Foul air vent and hood assembly

(13) A water cooler

(14) Stowage facilities for two refrigerators, two ovens, one hot beverage unit, one electrically heated food-warming cup, 75 reusable serving trays, accessory packets, six-ounce paper cups, paper towels, and miscellaneous non perishable items.

The galley operates with 115/200-volt AC power from from the No. 3 AC monitor bus (figure 1-70). This power is routed to the electrical receptacles and to the control panel. The control panel contains the following components:

(1) A two-position ("ON, "OFF") MAIN POWER switch

(2) A 30-minute timer for the food warming cup

(3) A two-position ("ON," "OFF") HOT PLATE

(4) Two, two-position ("ON," "OFF") REFR switches

(5) A two-position ("ON," "OFF") WATER PUMP switch

(6) A dimming switch for the galley lights

(7) Twelve circuit breakers

(8) Five green indicator lights, one each located adjacent to the food warming cup, refrigerators, hot plate and main power switches.

RELIEF CREW WORK TABLE.

A work table is provided for use in the relief crew area and may be installed by placing the left hand rear set of seats facing forward and securing the table to the attachments below the window and to a special floor fitting. This fitting unscrews one-quarter turn and pops up above the floor level. The table leg is set on the fitting and secured by a locking collar that slips down over it. The knurled ring is hand-tightened to remove looseness between the collar and floor fitting. The table is stowed in the crew coat closet when not in use.

PROTECTIVE COVERS.

Protective covers for the APU exhaust duct, ATM exhaust outlet, engine inlet ducts, fan exhaust ducts, generator cooling outlet, nacelle cooling outlet, oil breather exit, pitot tubes, primary engine exhaust ducts, and ram air inlet are provided and stowed in the airplane.

The pitot tube covers are stowed in a stowage box located on the right-hand side of the airplane, opposite and forward of the main crew entrance door, at waist level above the walkway.

The ram air inlet cover is stowed in a stowage box on the right-hand side of the airplane, forward of the main wing box area, at walkway level.

The covers for the ATM exhaust outlets, generator cooling outlet, nacelle cooling outlet, and oil breather exit are stowed in the loose equipment lockers located forward of the aft troop doors.

The covers for the APU exhaust duct, engine inlet ducts, fan exhaust ducts, and primary exhaust ducts are stowed on a vertical stowage rack located aft of the right-hand troop door, extending from the walkway up along the side of the cargo compartment.

NIGHT CURTAIN.

Night curtains are installed behind the pilots' seats to prevent flight station lighting from interfering with pilot vision. The curtains are installed with snap-on fasteners to the forward side of the navigator's and flight engineer's station structure. When not in use, the curtains are stowed outboard and against the forward side of each flight station structure.

ALDIS LAMP STOWAGE.

The aldis lamp is provided in a recess on the forward lower area of the copilot's side console. The aldis lamp filters and case are provided in the flight engineer's under table stowage compartment. An outlet for the lamp is located in the approximate center of the inboard surface of both the pilot's and copilot's side console. Power to the outlets comes from the 28-volt isolated DC bus (figure 1-64).

The aldis lamp may also be used to view the underside of the wing and the inboard side of the engines and pylons from the cargo compartment windows. Power is supplied from the 28-volt DC receptacles located under the left and right cargo compartment walkways.

DRU FILM PACK AND REEL STOWAGE.

On airplanes modified by T.O. 1555, provisions have been made for the installation of a stowage tray under the shelf of the blanket stowage unit in the aft crew bunk compartment. The stowage tray will have a hinged door and will accommodate a spare DRU film pack and a spare reel of MDR tape.

MADAR TAPE CASSETTE STOWAGE.

On airplanes modified by T.O. 1480, a spare tape cassette is provided and is stowed in the aft bunk area on the shelf above the oxygen masks.

In the event an off-shore mission results in total flight time duration in excess of the available Maintenance Data Recorder time, the spare tape cassette can be used. Refer to the MDR Cassette Installation and Removal Procedures in this Section.

LOOSE EQUIPMENT STOWAGE BOXES.

There are five loose equipment stowage boxes installed in the cargo compartment. Three of the boxes are located on the right-hand side of the cargo compartment at the fuselage stations 464, 684 and 1764. Two of the boxes are located on the left-hand side of the cargo compartment at fuselage stations 684 and 1764.

LETDOWN CHART HOLDERS.

Two integrally lighted, rheostat controlled letdown chart holders are installed under the lower left- and right-hand sides of the glareshield. The holders can be pivoted to a stowed position when not in use. The pilot's panel flood lights dimming control auto-transformer receives 115-volt AC power from the emergency bus (figure 1-61). The pilot's letdown chart holder receives 28-volt AC power from the 28-volt tap on the auto-transformer through a circuit breaker located beside the dimming control (figure 1-76).

The copilot's panel flood lights dimming control auto-transformer receives 115-volt AC power from the forward main AC bus No. 2 (figure 1-66). The copilot's letdown chart holder receives 28-volt AC power from the 28-volt tap on the auto-transformer through a circuit breaker located beside the dimming control (figure 1-76).

UHF FREQUENCY CARD HOLDERS.

Two spring-loaded, hinged UHF frequency card holders are attached to the underside of the glareshield between the PCI and the NAVIGATION SELECTOR. A card with UHF frequencies may be inserted in the holder that is stowed flat against the underside of the glareshield. Pulling down and aft on the holder brings the frequency card into view.

SCROLL CHECKLIST HOLDERS.

Integrally lighted, rheostat controlled, scroll checklist holders are provided for the copilot, flight engineer and loadmaster. The copilot's scroll checklist holder is attached to the upper window sill on the copilot's side of the center window, and the flight engineer's scroll checklist holder is attached to the left-hand side of the flight engineer's console. The copilot's scroll checklist holder is illuminated with 28-volt AC power from the 115-volt forward main AC bus No. 2 (figure 1-66). The power is stepped down through the copilot's flood lighting dimming control unit on the aft portion of the overhead console. The flight engineer's scroll checklist holder is illuminated with 28-volt AC power from the 115-volt forward main AC bus No. 2 (figure 1-66). The power is stepped down through the flood table and utility light dimming control unit on the lighting control panel located on the flight engineer's console.

The loadmaster has a scroll checklist holder mounted next to the forward and aft cargo door and ramp hydraulic manifolds. The loadmaster's forward scroll checklist holder is illuminated with 28-volt AC power from the OVHD RAMP LOADING LIGHTS circuit breaker located on the LH FORWARD LOADMASTER CONTROL panel (figure 1-122). The aft scroll checklist holder is illuminated with 28-volt AC power from the LH OVERHEAD RAMP LOADING LIGHTS circuit breaker located on the LH AFT LOADMASTER CONTROL panel (figure 1-122).

TOLD CARD HOLDERS.

A TOLD card holder is installed above the SKE indicator on the pilot's and copilot's main instrument panels (figures 1-9 and 1-11). The holder is attached to the instrument panel by pile tape and can be removed if desired.

PERSONNEL ADVISORY, CAUTION AND WARNING ANNUNCIATORS.

Advisory, caution and warning annunciator assemblies are installed in the relief crew area and courier compartment, and as a kit in the troop and cargo compartment. These annunciators are illuminated to advise, caution, or warn personnel in the airplane of impending action to be taken and cautions to be observed. The annunciators are controlled by a two-position NO SMOKING toggle switch and a two-position SEAT BELTS toggle switch located on the right aft portion of the pilots' overhead console. Placing the NO SMOKING switch to "ON" routes 28-volt DC power from the main DC bus No. 2 to energize the no smoking annunciator control relay. This relay routes 28-volt AC power from the aft main AC bus No. 3 to the NO SMOKING annunciators in the relief crew area and courier compartment. This relay also routes 115-volt AC power from the aft main AC bus No. 2 to the no smoking kit provision outlets in the troop and cargo compartments (figure 1-70).

Placing the SEAT BELTS switch to "ON" routes 28-volt DC power from the main DC bus No. 2 to the seat belt annunciators control relay. This relay routes 28-volt AC power from the 115-volt aft main AC bus No. 3 to the FASTEN SEAT BELT annunciators in the relief crew area and courier compartment and to the RETURN TO SEAT annunciators in the relief crew lavatory and troop lavatory kit provision outlet (figure 1-70). This relay also routes 115-volt AC power from the aft main AC bus No. 2 to the fasten seat belt kit provision outlets in the troop and cargo compartments (figure 1-70).

PRESSURE DOOR HINGE LOCK BLOCKS

Two pressure door upper hinge lock blocks are attached to the F valve safety guard and stowed in the loose equipment stowage box. The blocks are used to hold the pressure door upper hinge locks in their overcenter position.

PORTABLE INSPECTION LIGHTS

Two 150-watt portable inspection lights, one located in each forward main landing gear wheel well, are provided for maintenance and servicing operations Each light is equipped with a built-in transformer, a switch, and a 30-foot cord. The lights may be plugged in to 115-volt 400 CPS receptacles at the following locations: one in the nose gear wheel well, one in each main gear wheel well, one on each engine pod, and two in the empennage.

(This page intentionally left blank)

GENERAL ARRANGEMENT DIAGRAM

1. AERIAL REFUEL RECEPTACLE
2. OVERHEAD ESCAPE HATCH NO. 1
3. FLIGHT DECK SERVICE DOOR (NO. 5)
4. OVERHEAD ESCAPE HATCH NO. 2
5. NO. 3 MAIN TANK
6. NO. 3 EXTENDED RANGE TANK
7. NO. 3 AUXILIARY TANK
8. NO. 4 EXTENDED RANGE TANK
9. NO. 4 AUXILIARY TANK
10. NO. 4 MAIN TANK
11. LEADING EDGE SLATS (SEVEN SECTIONS)
12. RIGHT AILERON
13. FLIGHT SPOILERS
14. GROUND SPOILERS
15. WING FLAPS (SIX SECTIONS)
16. TROOP COMPARTMENT ESCAPE HATCH (3L). ESCAPE HATCH (3R) ON OPPOSITE SIDE NOT SHOWN.
17. TROOP COMPARTMENT SERVICE DOOR (NO. 6). ESCAPE HATCH NO. 4 ON OPPOSITE SIDE NOT SHOWN.
18. HORIZONTAL STABILIZER ACCESS DOOR
19. OUTBOARD ELEVATORS
20. INBOARD ELEVATORS
21. UPPER RUDDER
22. LOWER RUDDER
23. TROOP DOOR (IDENTICAL DOOR ON OPPOSITE SIDE NOT SHOWN)
24. LEFT AILERON
25. NO. 1 MAIN TANK
26. NO. 1 AUXILIARY TANK
27. NO. 1 EXTENDED RANGE TANK
28. NO. 2 AUXILIARY TANK
29. NO. 2 EXTENDED RANGE TANK
30. NO. 2 MAIN TANK
31. CREW ENTRANCE DOOR
32. VISOR
33. RADOME

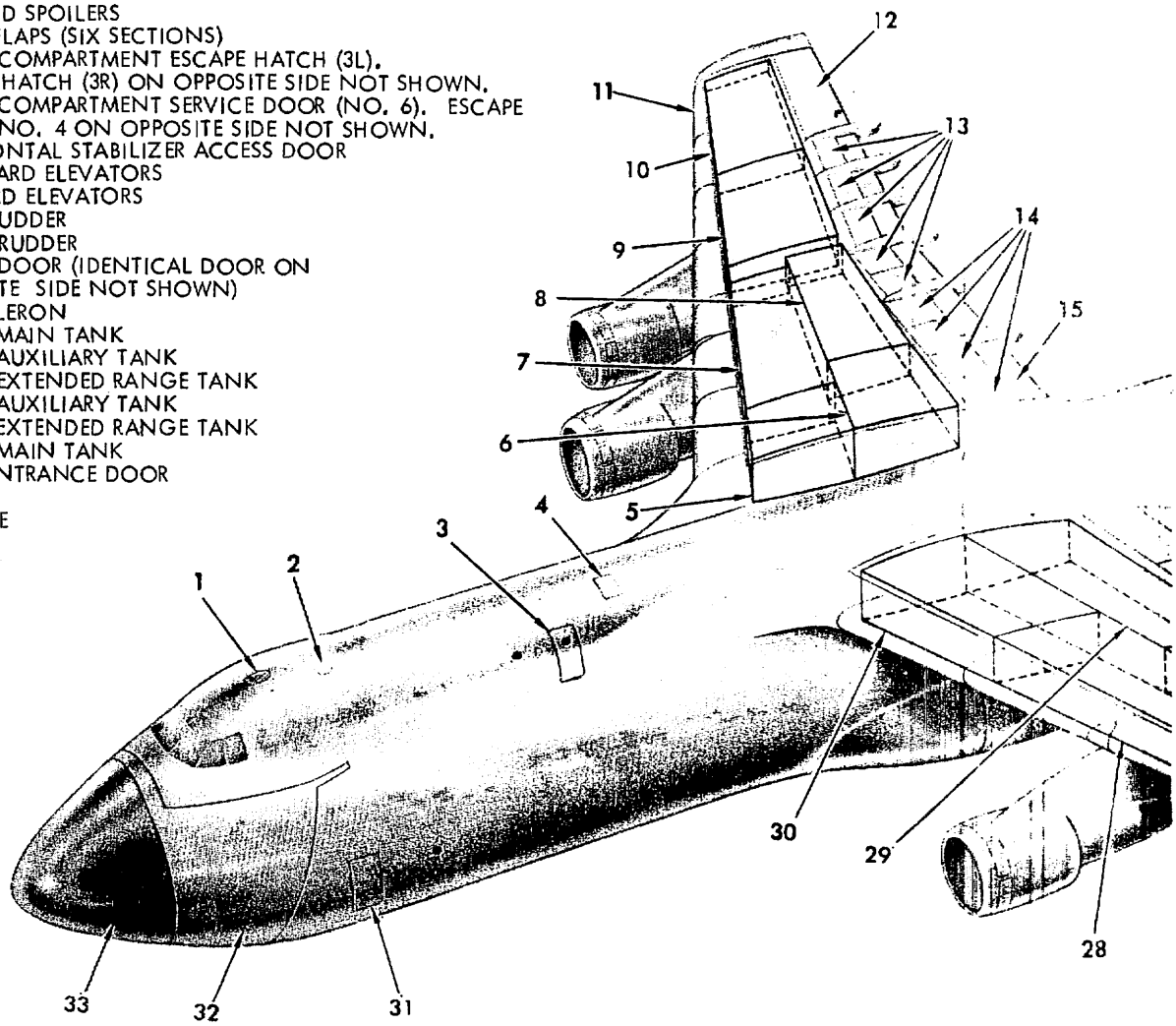

C5A-1-9-001-1

Figure 1-1. (Sheet 1 of 8)

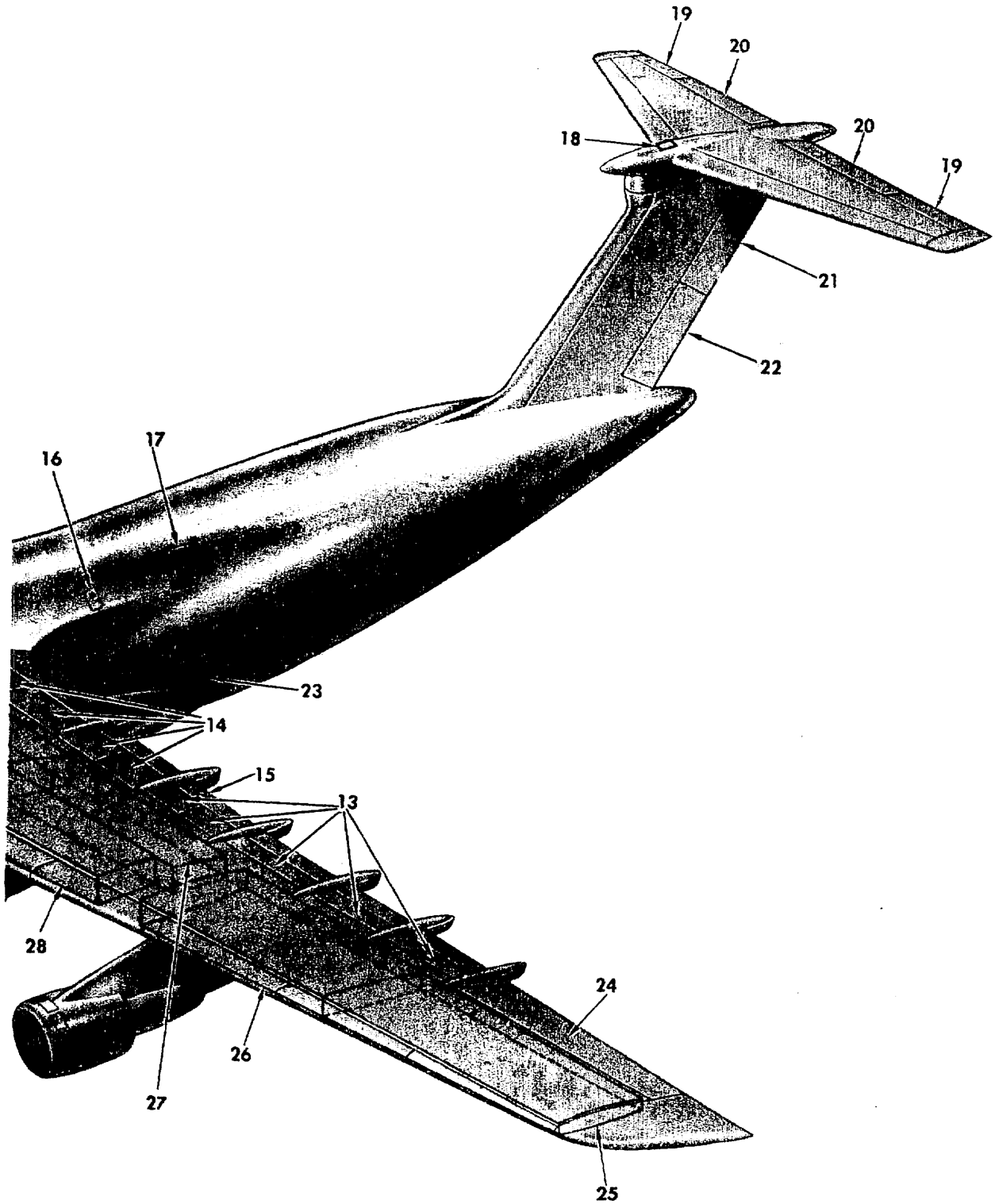

C5A-1-6-001-2

Figure 1-1. (Sheet 2 of 8)

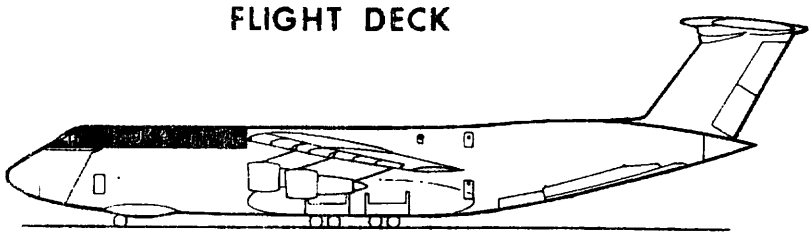

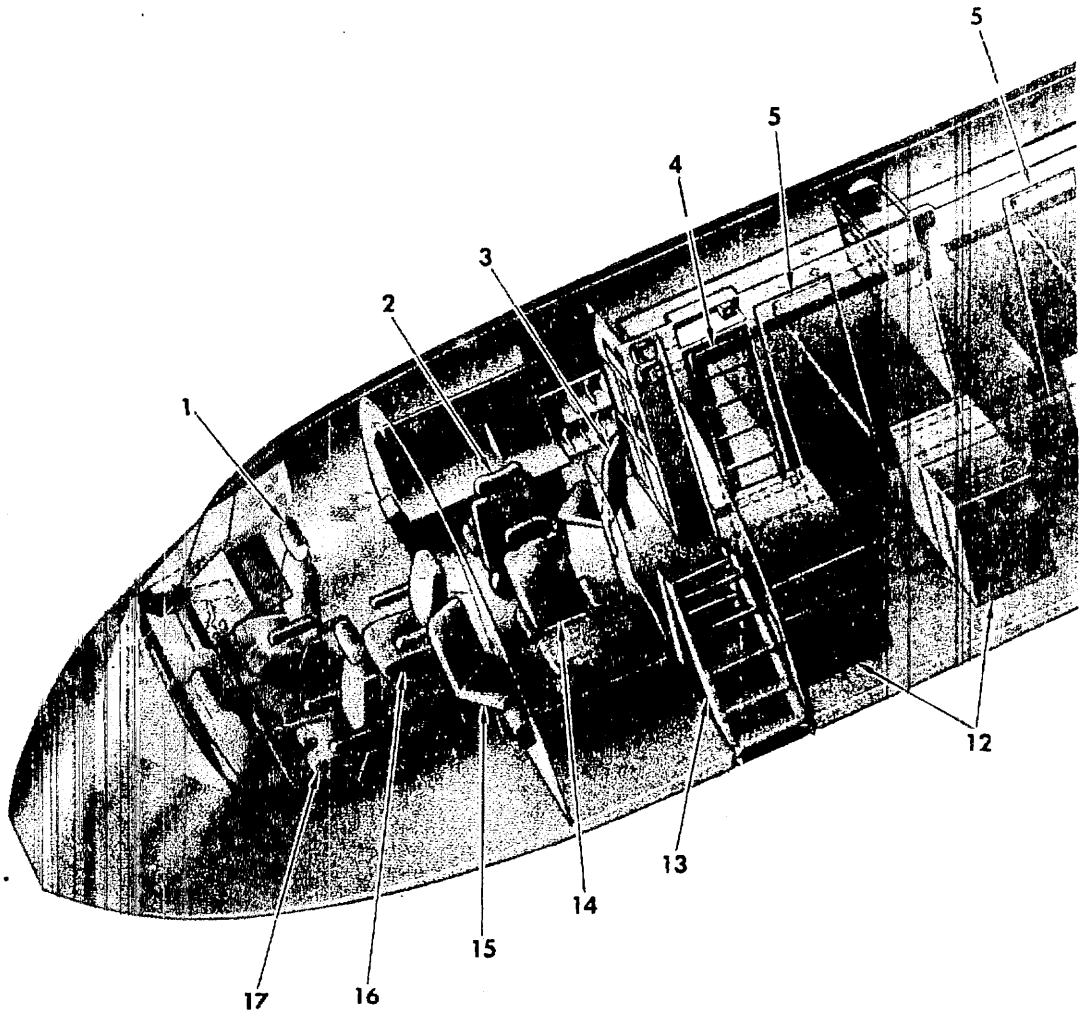

C5A-1-X2/0-001-3

Figure 1-1. (Sheet 3 of 8)

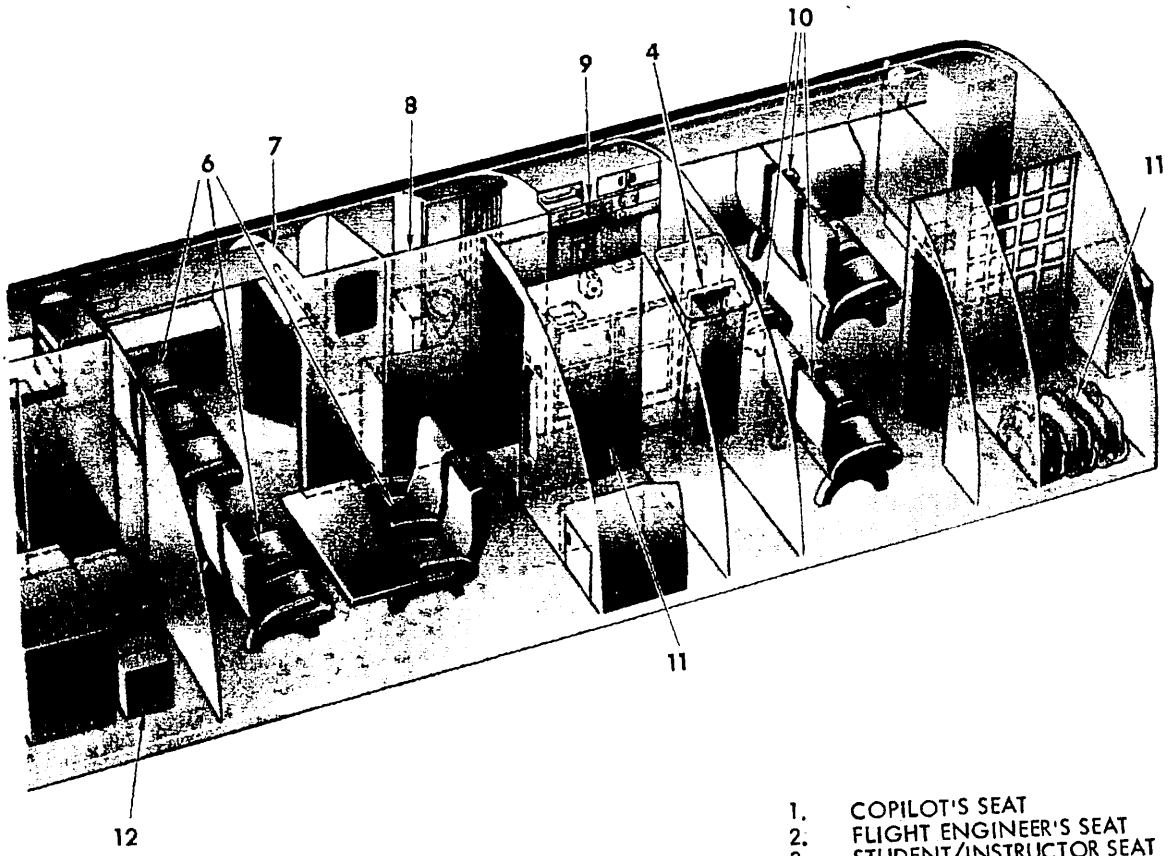

1. COPILOT'S SEAT
2. FLIGHT ENGINEER'S SEAT
3. STUDENT/INSTRUCTOR SEAT
4. OVERHEAD ESCAPE HATCH LADDER
5. BUNK ROOMS
6. RELIEF CREW SEATING
7. CLOTHES CLOSET
8. LAVATORY
9. GALLEY
10. COURIER SEATING
11. BAGGAGE STORAGE
12. AVIONICS EQUIPMENT RACKS
13. FLIGHT STATION LADDER
14. NAVIGATOR'S SEAT
15. STUDENT/INSTRUCTOR SEAT
16. OBSERVER'S SEAT
17. PILOT'S SEAT

C5A-1-X2/0-001-4

Figure 1-1. (Sheet 4 of 8)

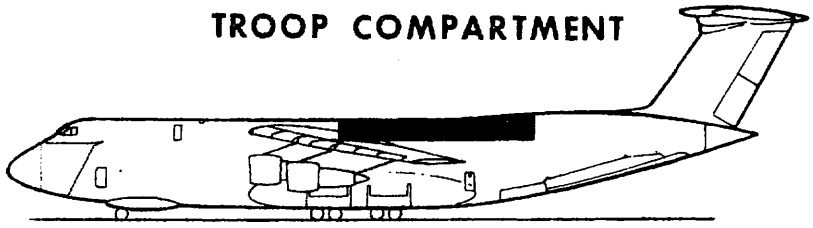

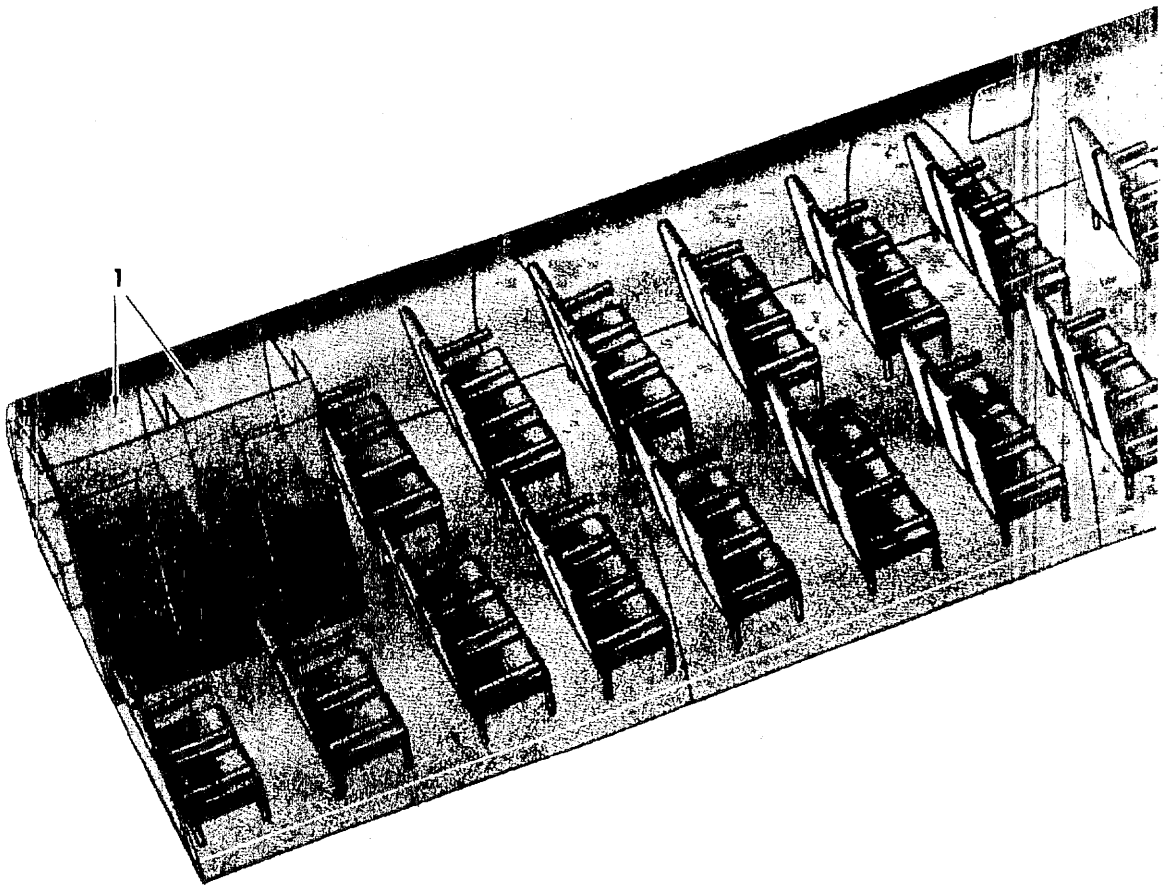

C5A-1-9-001-5

Figure 1-1. (Sheet 5 of 8)

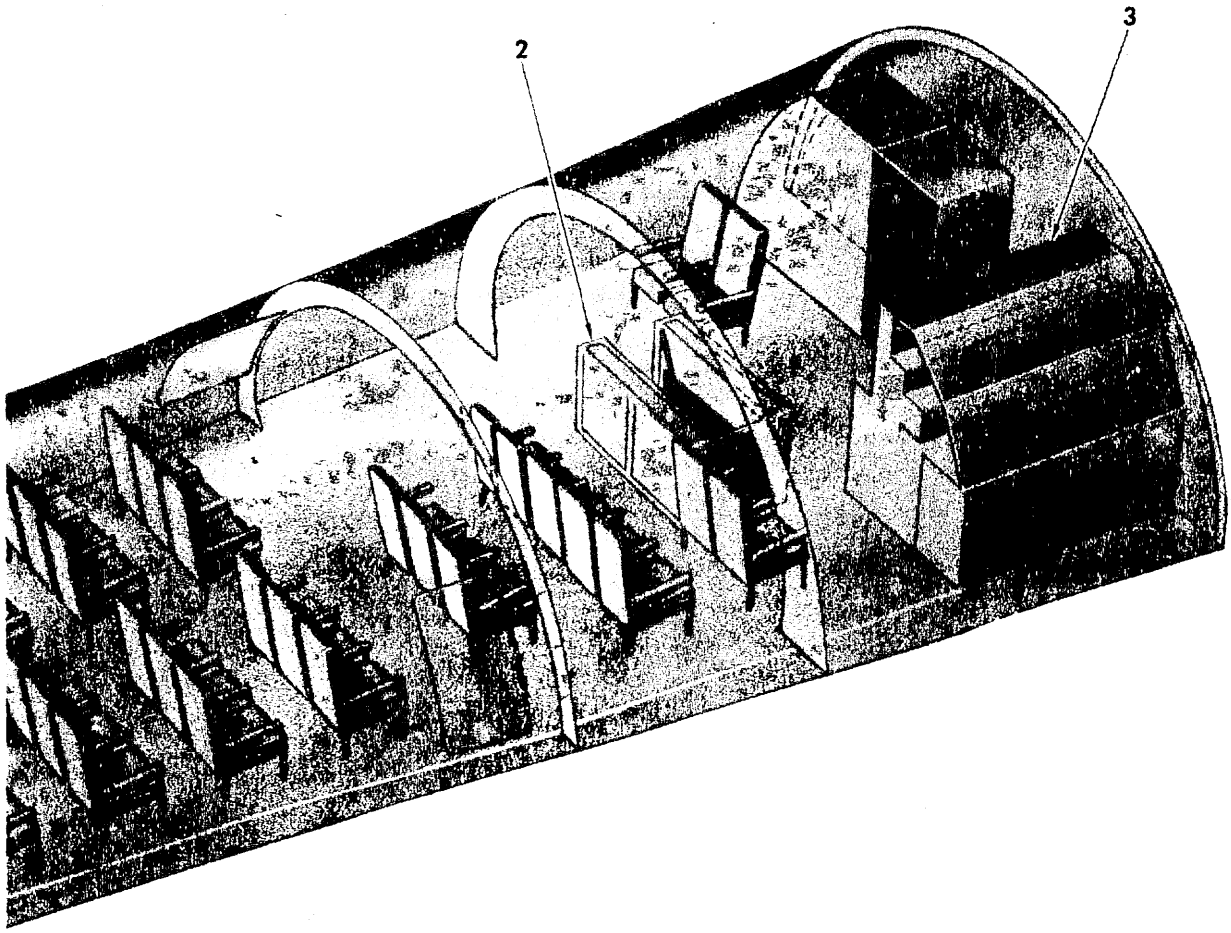

1. LAVATORY
2. TROOP COMPARTMENT LADDER
3. GALLEY

C5A-1-X2/0-001-6

Figure 1-1. (Sheet 6 of 8)

FLUID	NO. OF TANKS	FLUID SPECIFICATION	NATO SYMBOL
FUEL	12	MIL-T-5624 (JP-4)	F-40
ALTERNATE FUEL	12	MIL-T-5624 (JP-5)	F-44
ENGINE OIL	4	MIL-L-7808G	O-148
ENGINE STARTER OIL	4	MIL-L-7808G	O-148
CSD OIL	4	MIL-L-7808G	O-148
APU OIL	2	MIL-L-7808G	O-148
ATM OIL	2	MIL-L-7808G	O-148
HIGH PRESSURE COMPRESSOR OIL	1	MIL-L-6085A	
HYDRAULIC FLUID	4	MIL-H-5606	H-515
OXYGEN	2	MIL-O-27210	NONE AVAILABLE
RAIN REPELLENT	2	TYPE II	
LIQUID NITROGEN (1)	2	MIL-P-27401	

NOTE

(1) ON AIRPLANES MODIFIED BY T.O. 1387.
2. CSD OIL SERVICING POINT LOCATED ON LOWER LEFT SIDE OF ACCESSORY DRIVE SECTION.
3. STARTER OIL SERVICING POINT LOCATED ON LOWER RIGHT SIDE OF ACCESSORY DRIVE SECTION.

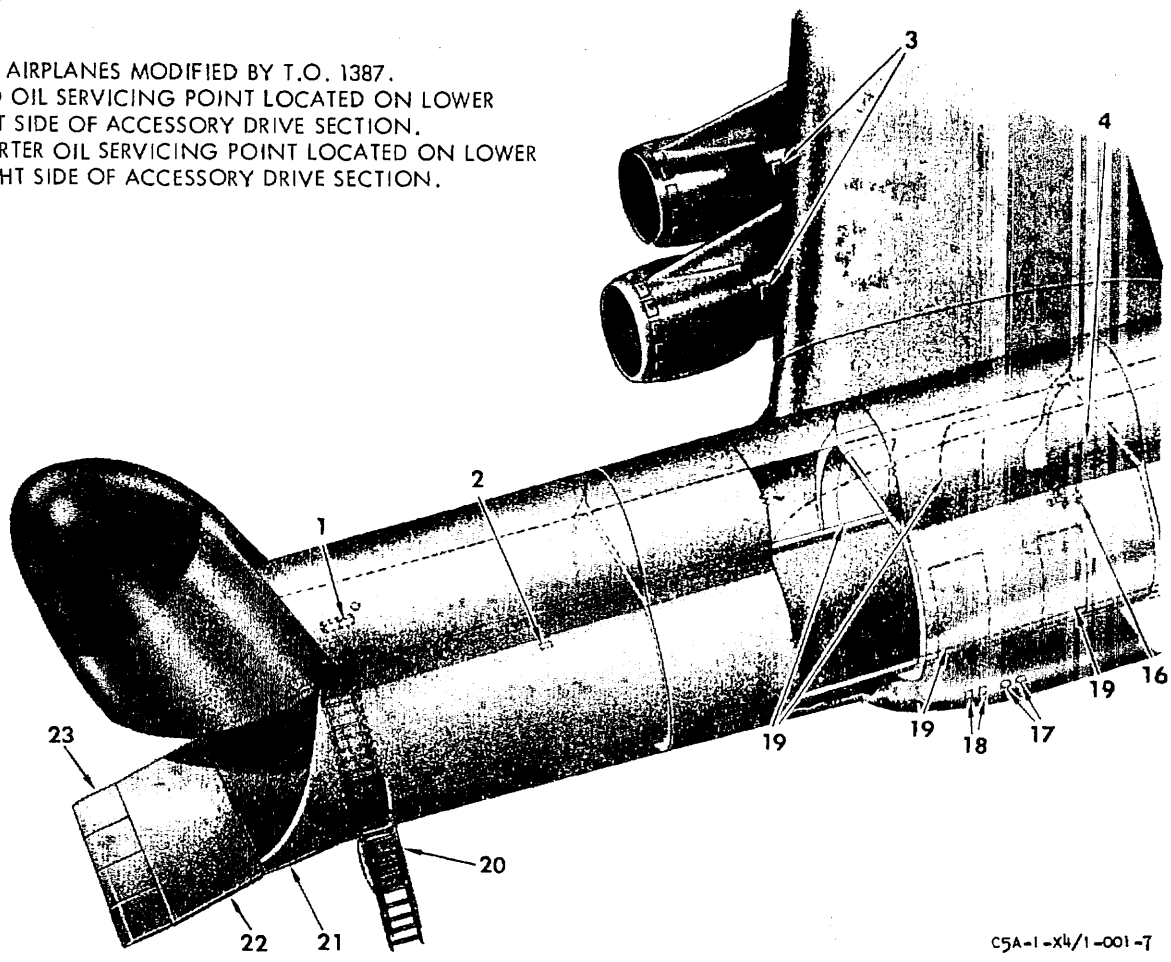

Figure 1-1. (Sheet 7 of 8)

1. BATTERIES (RIGHT SIDE CARGO COMPARTMENT)
2. EXTERNAL POWER RECEPTACLE (LOWER RIGHT SIDE FUSELAGE)
3. ENGINE OIL SERVICING ACCESS DOORS
4. TIRE INFLATION COMPRESSOR

4A. FSS LIQUID NITROGEN SERVICE COUPLINGS AND SERVICE PANEL. (AFT RIGHT WHEEL WELL-FORWARD BULKHEAD) ⚠1

5. RIGHT APU

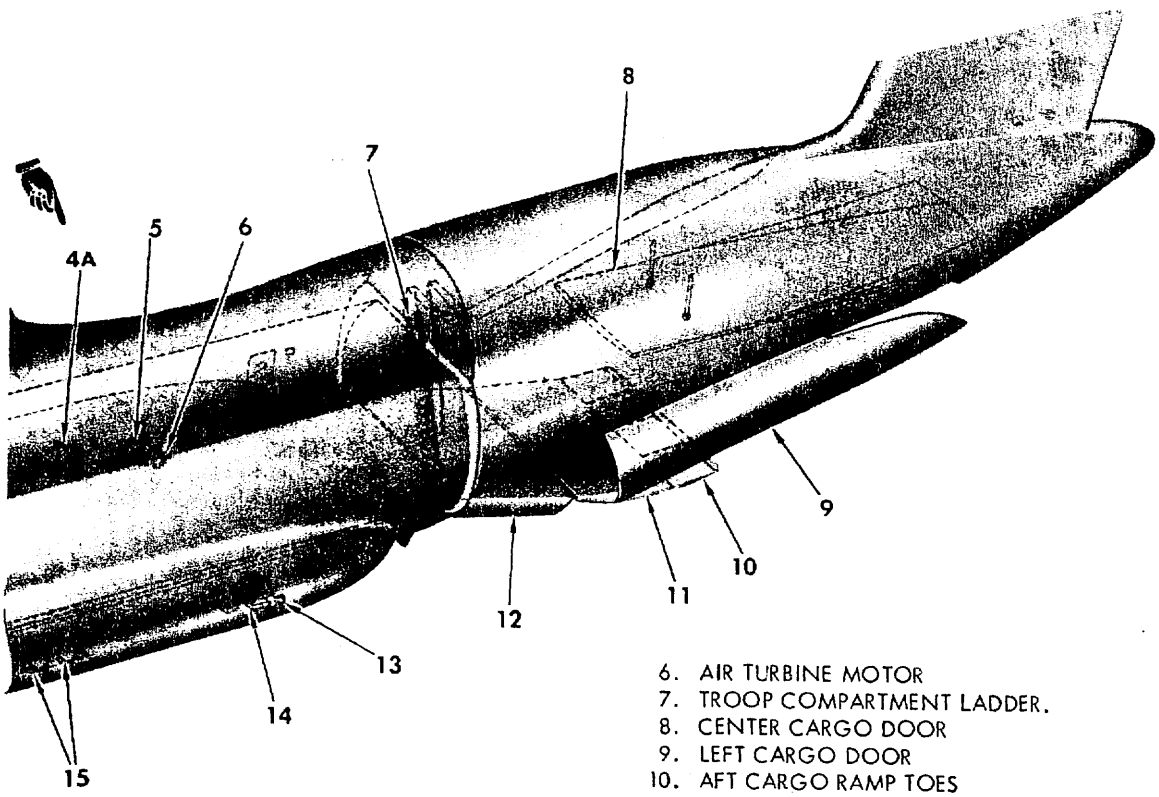

6. AIR TURBINE MOTOR
7. TROOP COMPARTMENT LADDER.
8. CENTER CARGO DOOR
9. LEFT CARGO DOOR
10. AFT CARGO RAMP TOES
11. AFT CARGO RAMP EXTENSION/PRESSURE DOOR
12. AFT CARGO RAMP
13. AIR TURBINE MOTOR
14. LEFT APU
15. LIQUID OXYGEN CONTAINERS
16. HIGH PRESSURE PNEUMATIC COMPRESSOR
17. SINGLE POINT GROUND REFUELING RECEPTACLES (TWO RECEPTACLES ON OPPOSITE SIDE, NOT SHOWN)
18. HYDRAULIC SYSTEMS 1 AND 2 SERVICING RECEPTACLE (HYDRAULIC SYSTEMS 3 AND 4 RECEPTACLES ON OPPOSITE SIDE, NOT SHOWN)
19. HYDRAULIC SERVICE CENTERS
20. CREW ENTRANCE DOOR AND LADDER
21. FORWARD CARGO RAMP
22. FORWARD CARGO EXTENSION
23. FORWARD CARGO RAMP TOES

C5A-1-X4/1-001-8

Figure 1-1. (Sheet 8 of 8)

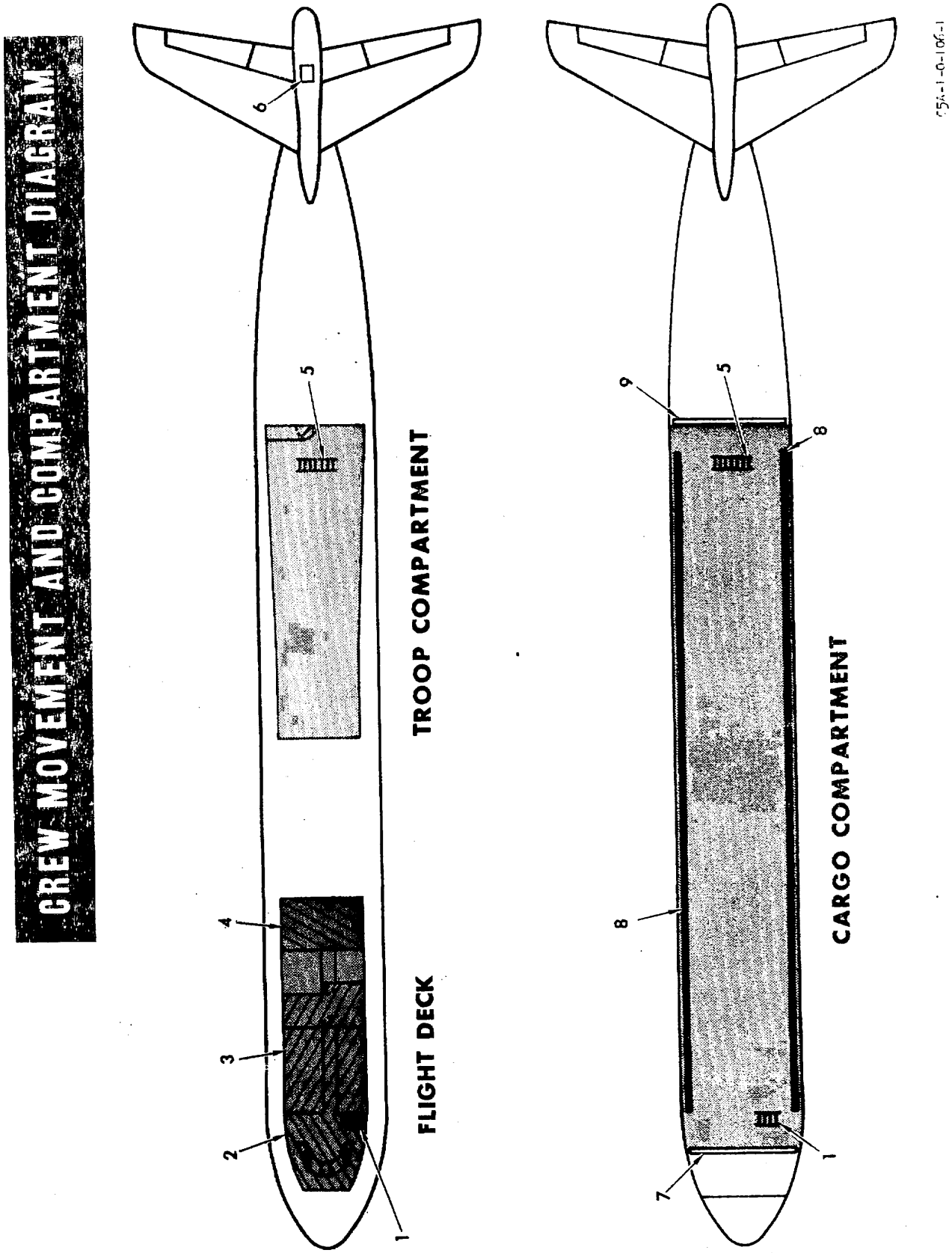

Figure 1-2. (Sheet 1 of 2)

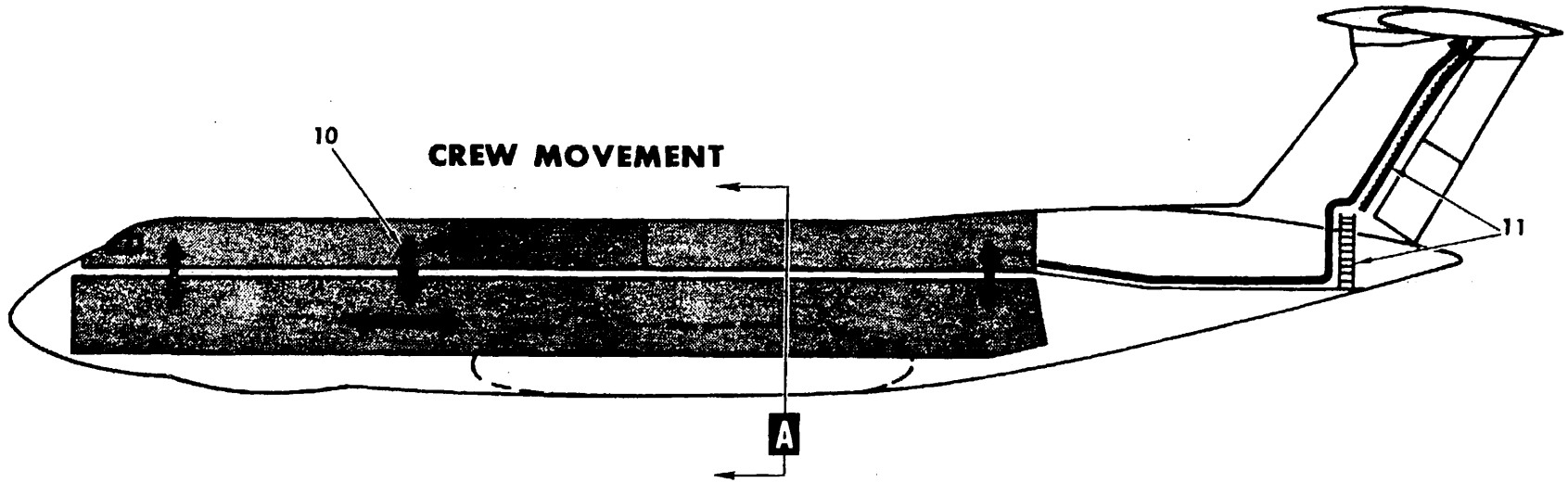

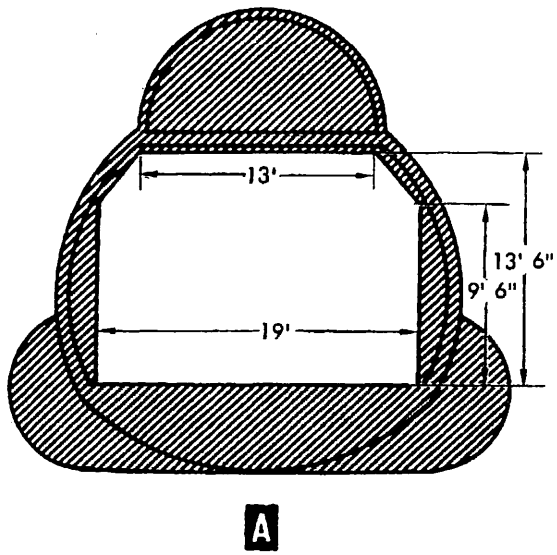

1. FLIGHT STATION LADDER
2. FLIGHT STATION
3. RELIEF CREW AREA
4. COURIER COMPARTMENT
5. TROOP COMPARTMENT LADDER
6. PERSONNEL ACCESS HATCH
7. FORWARD RAMP EXTENSION
8. WALKWAY
9. AFT PRESSURE DOOR
10. CARGO COMPT/COURIER COMPT ACCESS HATCH
11. EMPENNAGE ACCESS LADDER

AIR CONDITIONED AND PRESSURIZED AREAS

NOTE

THE DIMENSIONS SHOWN IN VIEW "A" ARE TYPICAL FOR THE ENTIRE COMPARTMENT

C5A-1-X1/0-106-2

Figure 1-2. (Sheet 2 of 2)

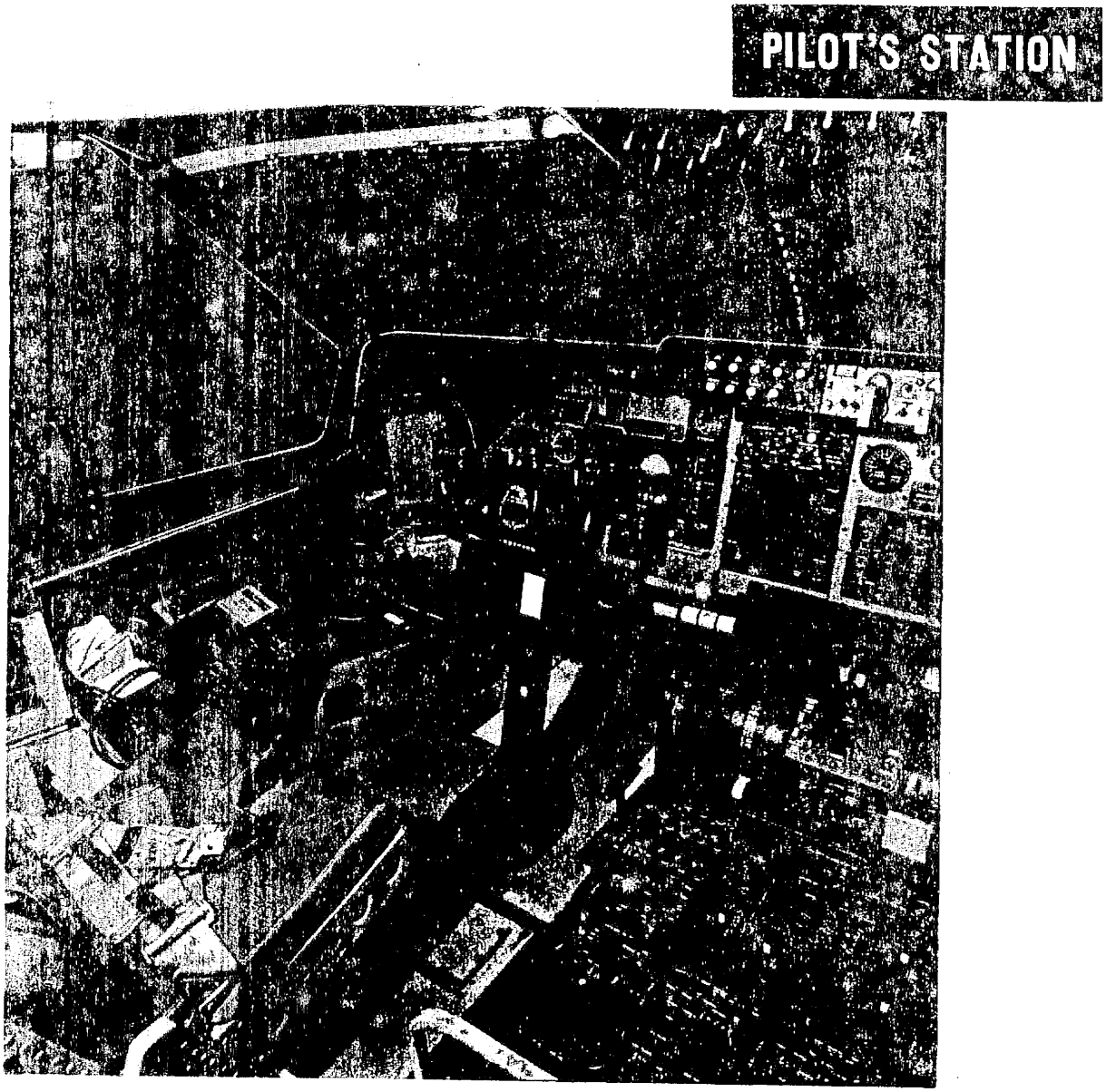

Figure 1-3.

COPILOT'S STATION (TYPICAL)

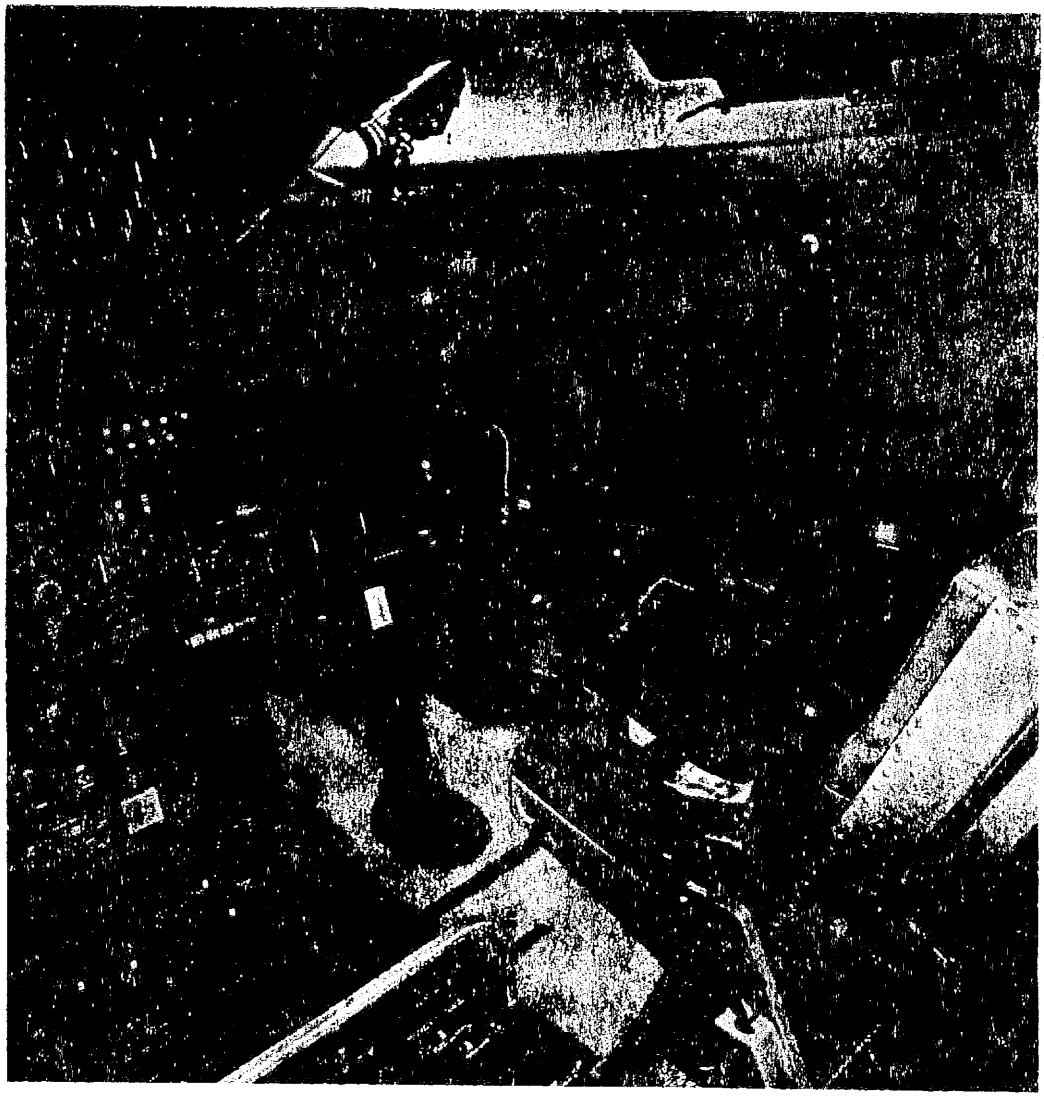

C5A-1-5-020

Figure 1-4.

FLIGHT ENGINEER'S STATION (TYPICAL)

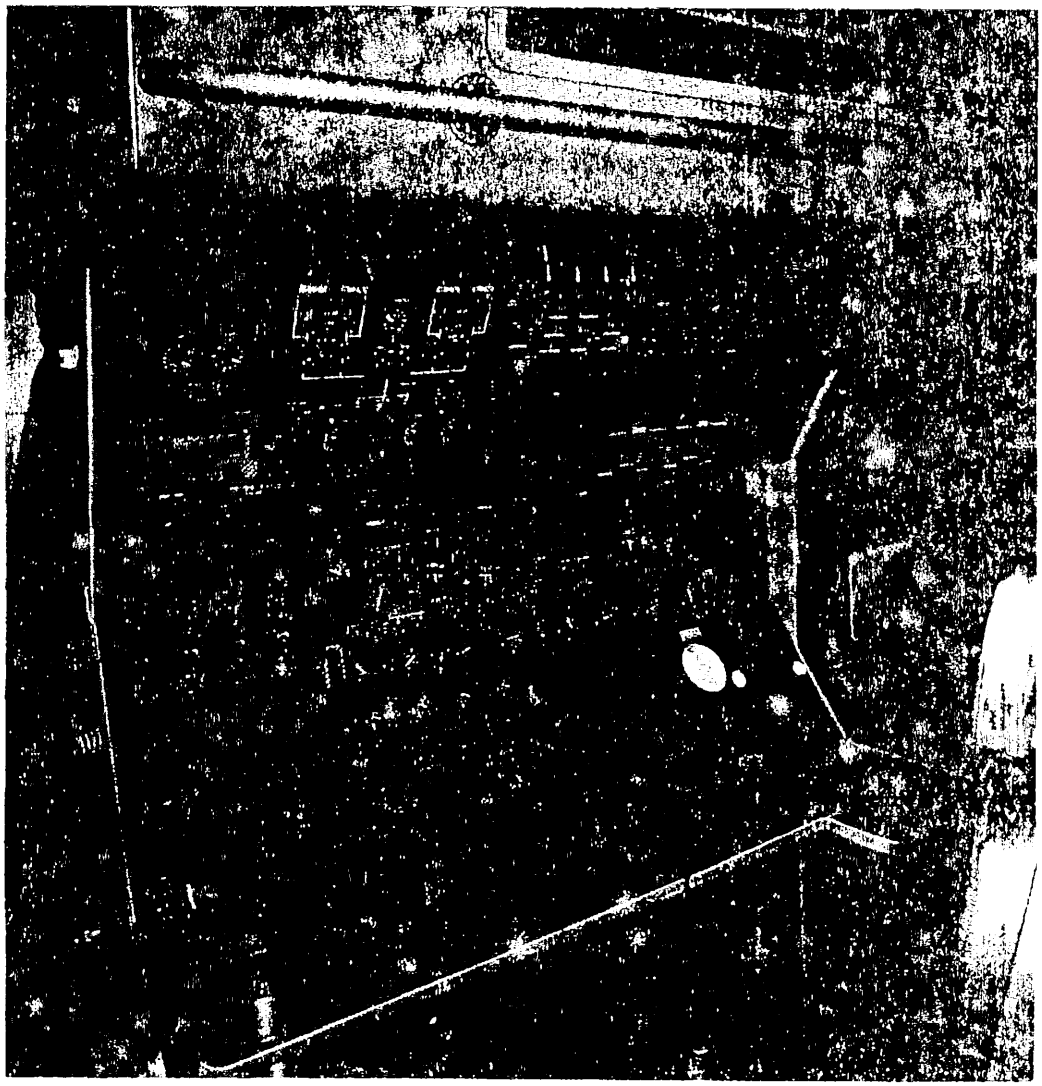

C5A-1-5-021

Figure 1-5.

NAVIGATOR'S STATION (TYPICAL)

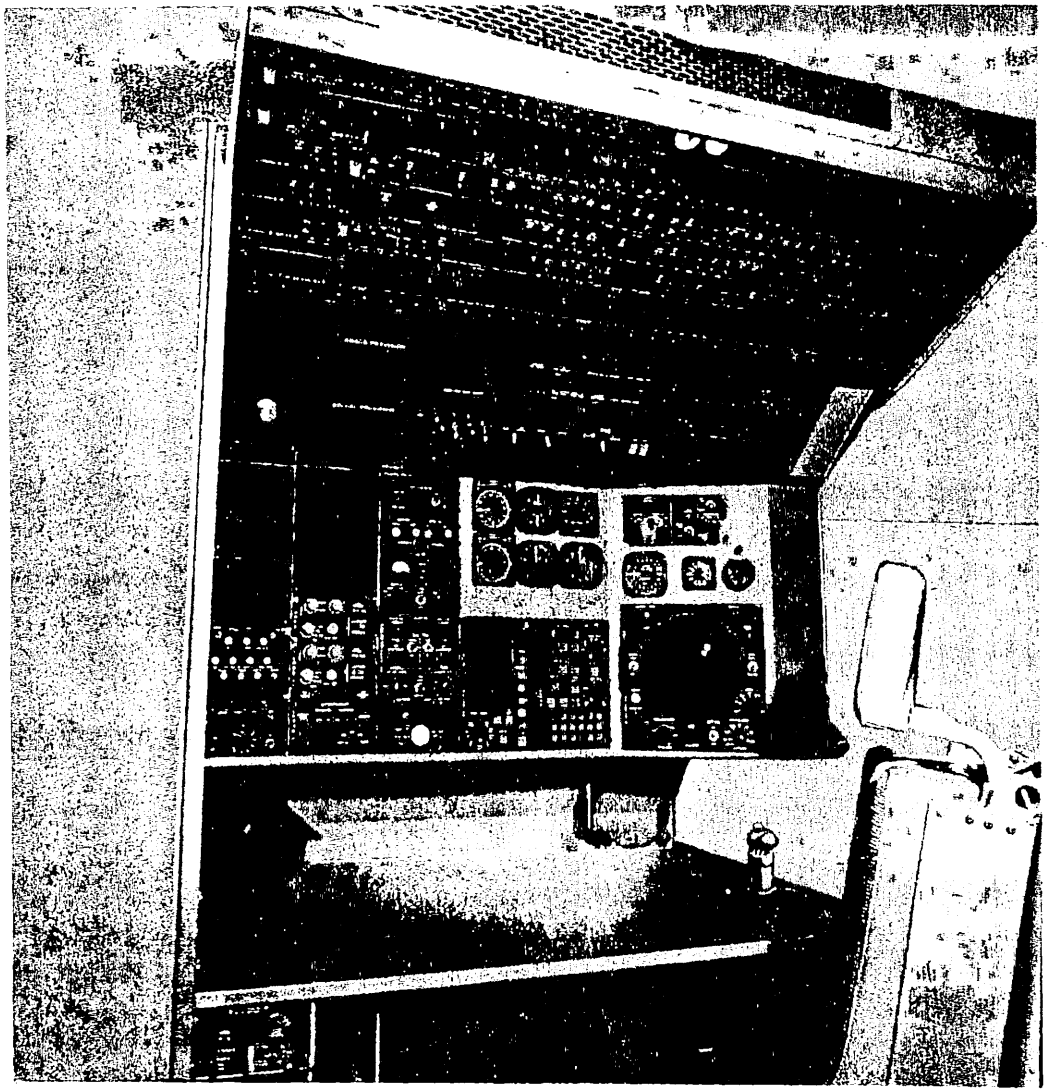

C5A-1-5-505

Figure 1-6.

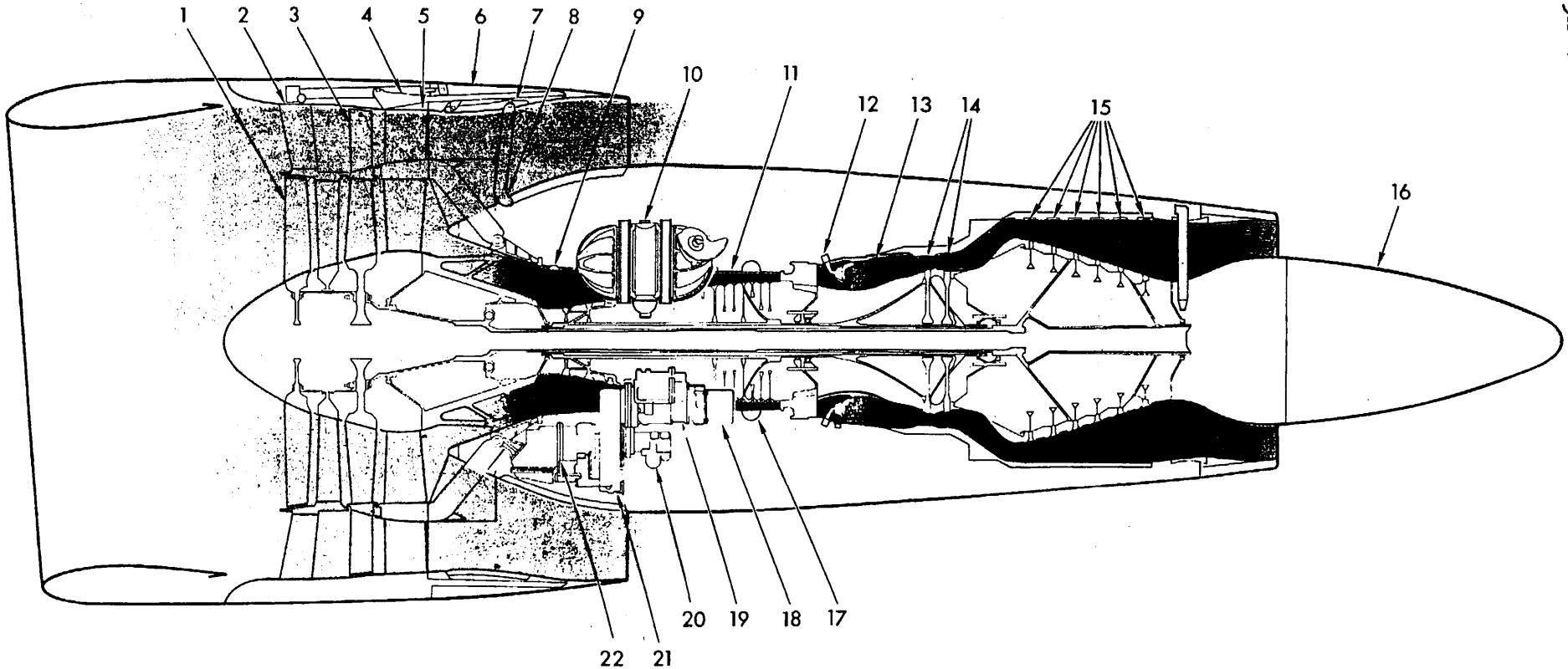

TYPE TF39-GE-1

1. FIRST STAGE FAN (N_1)
2. FAN INLET GUIDE VANE
3. SECOND STAGE FAN (N_1)
4. TRANSLATING COWL ACTUATOR
5. FAN AIR EXIT VANE
6. TRANSLATING COWL
7. BLOCKER FLAP
8. BLOCKER LINK
9. HIGH PRESSURE COMPRESSOR INLET GUIDE VANE
10. ENGINE OIL TANK
11. HIGH PRESSURE COMPRESSOR (N_2)
12. FUEL NOZZLE
13. COMBUSTION CHAMBER
14. HIGH PRESSURE TURBINE
15. LOW PRESSURE TURBINE
16. EXHAUST CONE
17. 13th STAGE BLEED AIR MANIFOLD
18. FUEL CONTROL
19. FUEL PUMP
20. LUBE AND SCAVENGE PUMP
21. ACCESSORY DRIVE GEARBOX
22. TRANSFER GEARBOX

Figure 1-7.

C5A-1-0-093

ENGINE FUEL FLOW

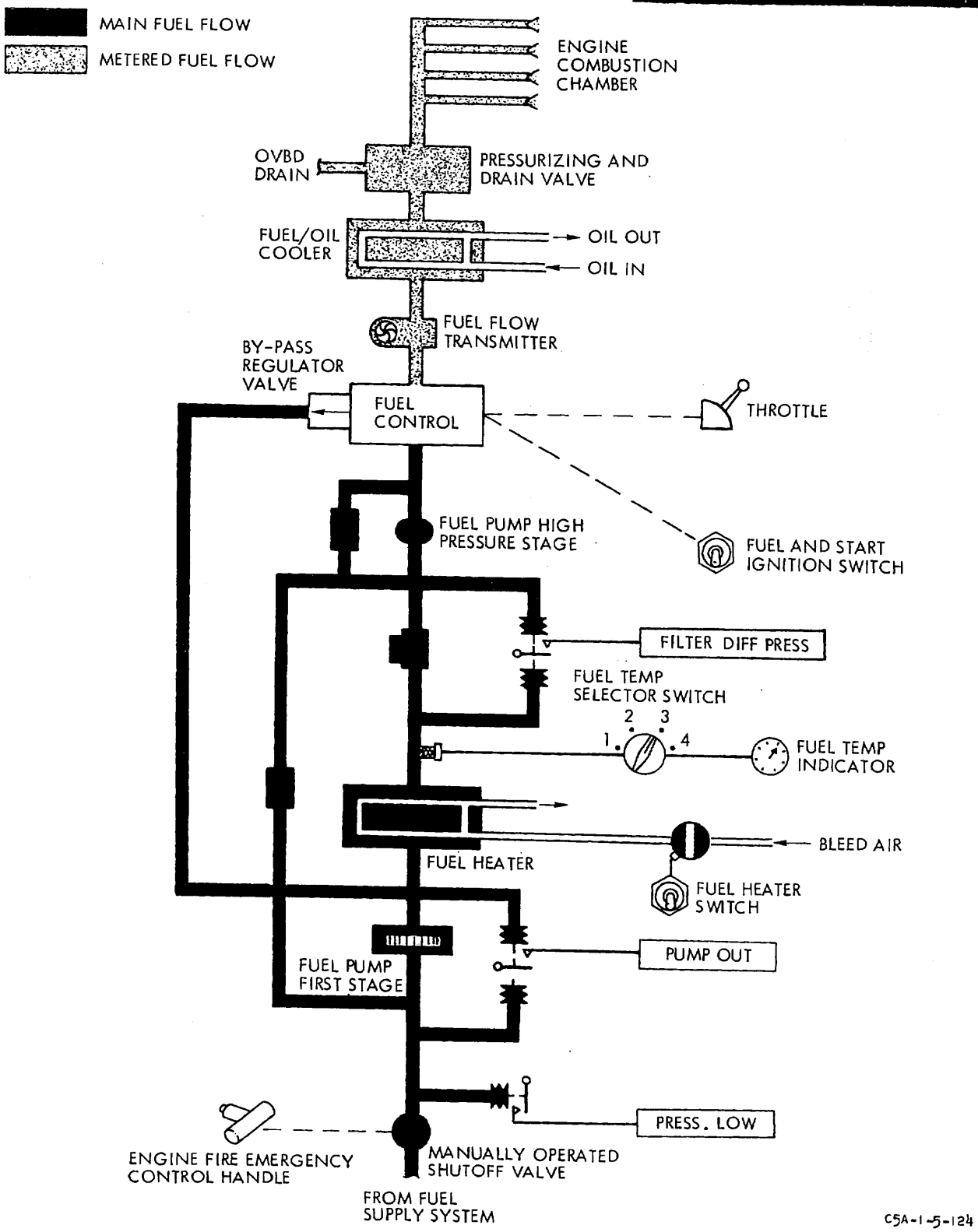

Figure 1-8.

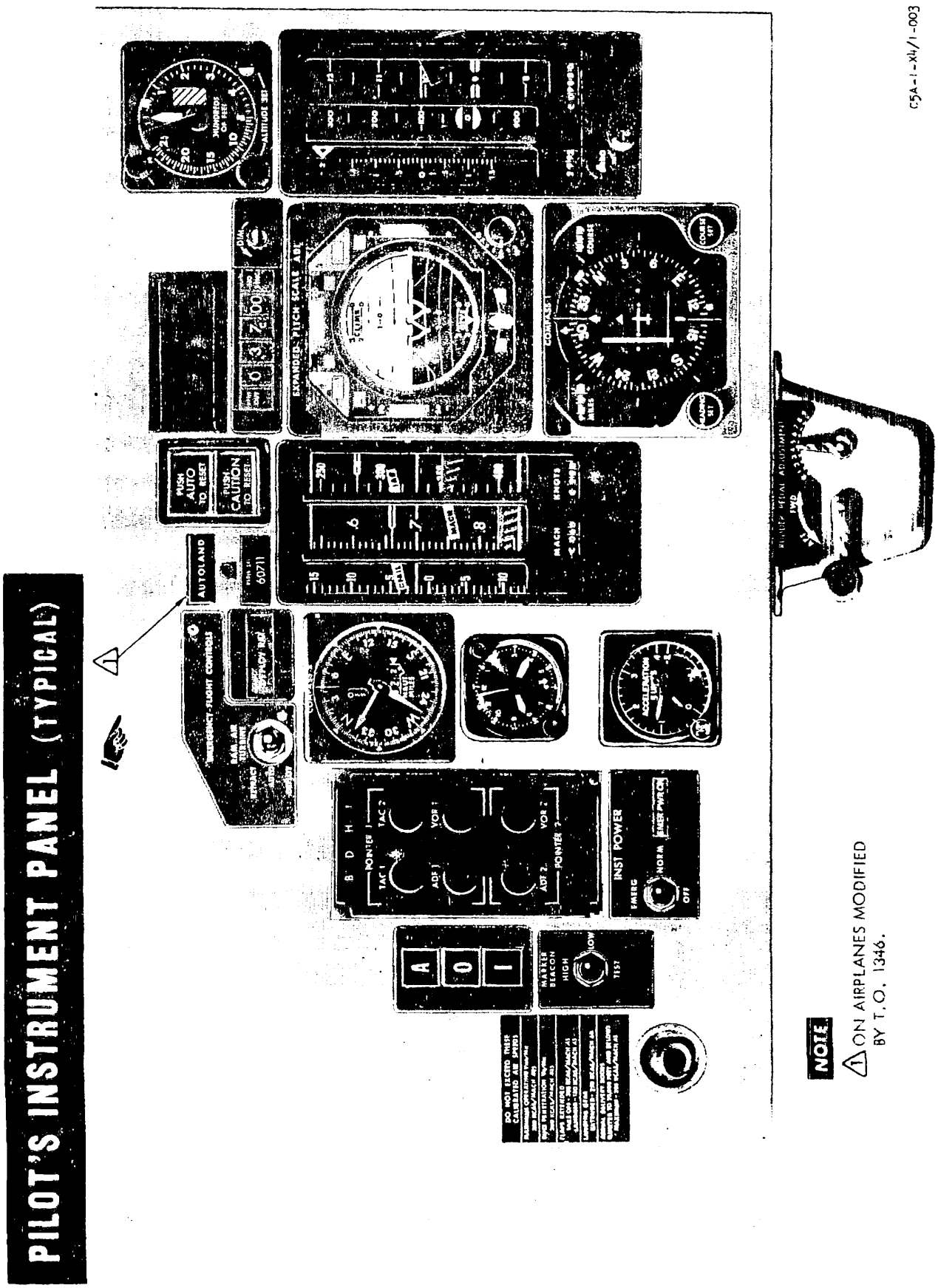

NOTE

1 ON AIRPLANES MODIFIED BY T.O. 1346.

Figure 1-9.

PILOTS' CENTER INSTRUMENT PANEL

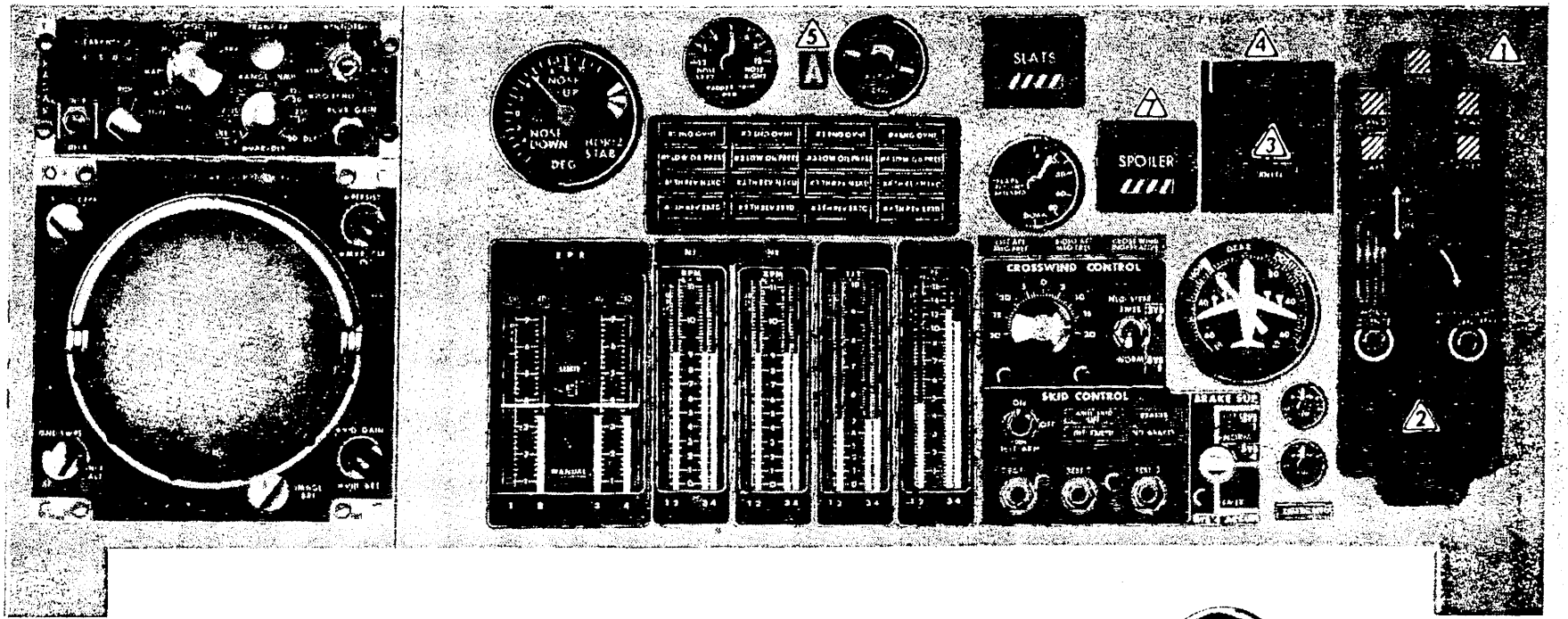

NOTE

1. ON 68305, 70168, 00445 AND UP AND AIRPLANES MODIFIED BY T.O. 1319, EDGE LIGHTED PANEL ADDED.
2. REMOVED ON 00461 AND UP AND AIRPLANES MODIFIED BY T.O. 1345.
3. INSTALLED ON 00461 AND UP AND AIRPLANES MODIFIED BY T.O. 1345.
4. ON 68304, 68307, 70167, 70168 AND 70170 THRU 00460 NOT MODIFIED BY T.O. 1345.
5. ON 68304, 68307, 70167, 70168 AND 70170 THRU 00460 NOT MODIFIED BY T. O. 1334.
6. ON 00461 AND UP AND AIRPLANES MODIFIED BY T.O. 1334.
7. INDICATOR REMOVED ON AIRPLANES MODIFIED BY T.O. 1324.

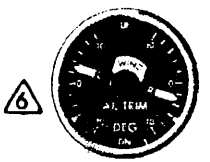

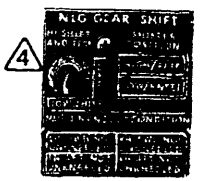

C5A-1-X4/0-004

Figure 1-10.

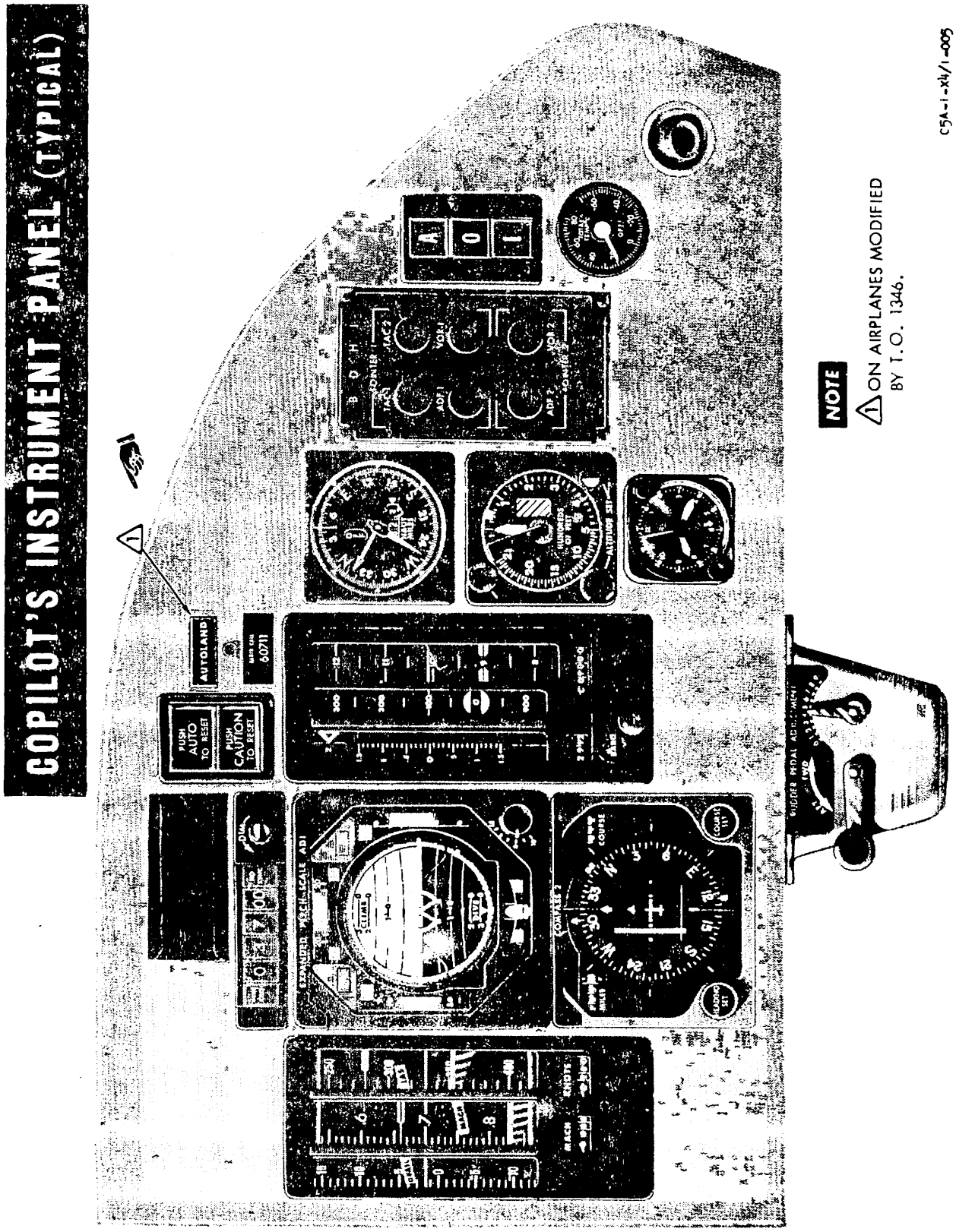
COPILOT'S INSTRUMENT PANEL (TYPICAL)
AUTOLAND
PUSH AUTO TO RESET
PUSH CAUTION TO RESET
NOTE
1 ON AIRPLANES MODIFIED BY T.O. 1346.
C5A-1-XH/1-005

Figure 1-11.

ENGINE CONTROLS, NORMAL OPERATION

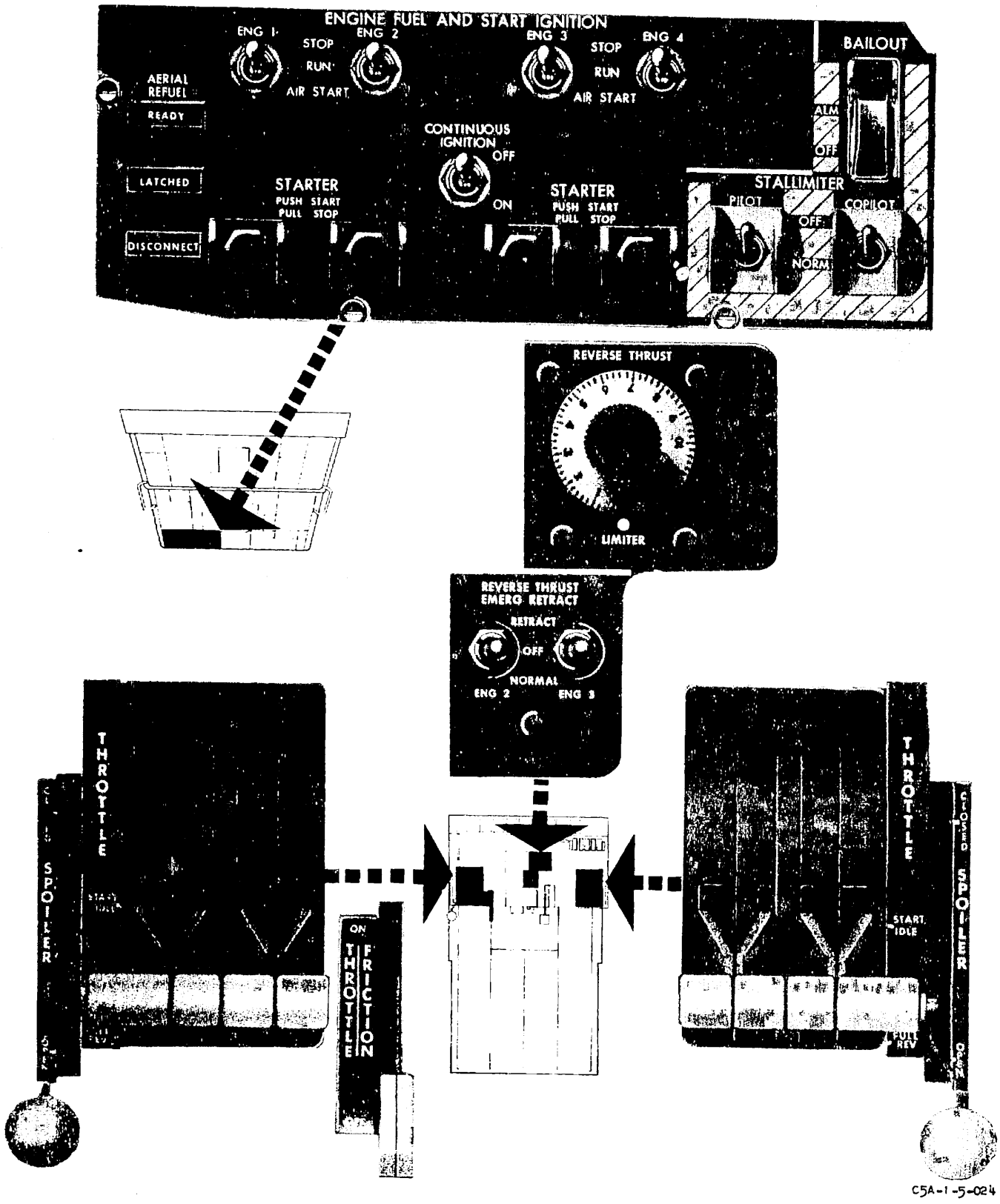

Figure 1-12.

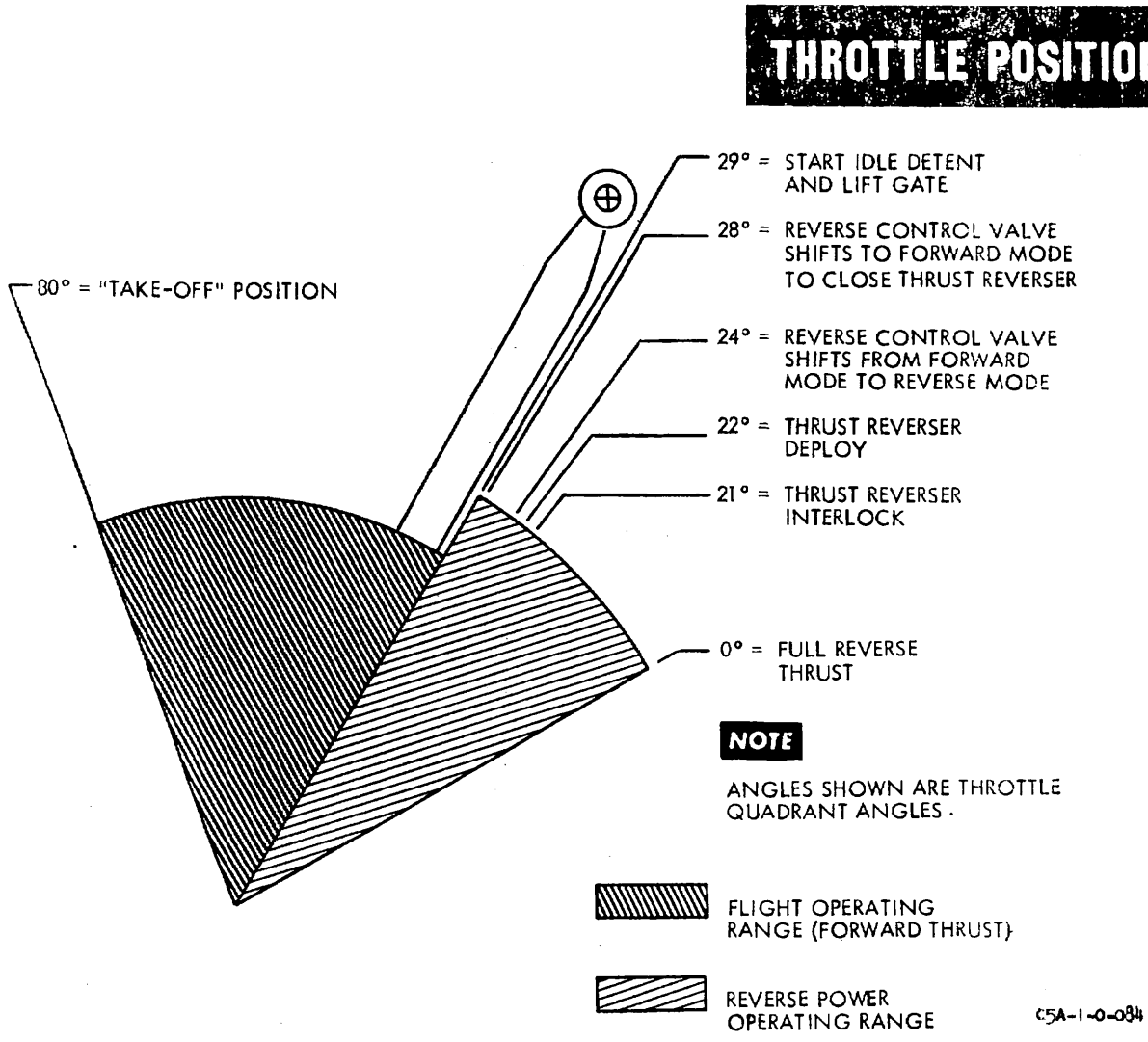
THROTTLE POSITIONS
29° = START IDLE DETENT AND LIFT GATE
28° = REVERSE CONTROL VALVE SHIFTS TO FORWARD MODE TO CLOSE THRUST REVERSER
80° = "TAKE-OFF" POSITION
24° = REVERSE CONTROL VALVE SHIFTS FROM FORWARD MODE TO REVERSE MODE
22° = THRUST REVERSER DEPLOY
21° = THRUST REVERSER INTERLOCK
0° = FULL REVERSE THRUST
NOTE
ANGLES SHOWN ARE THROTTLE QUADRANT ANGLES.
FLIGHT OPERATING RANGE (FORWARD THRUST)
REVERSE POWER OPERATING RANGE
C5A-1-0-084

Figure 1-13.

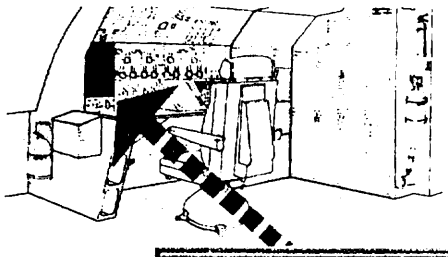

ENGINE INDICATORS

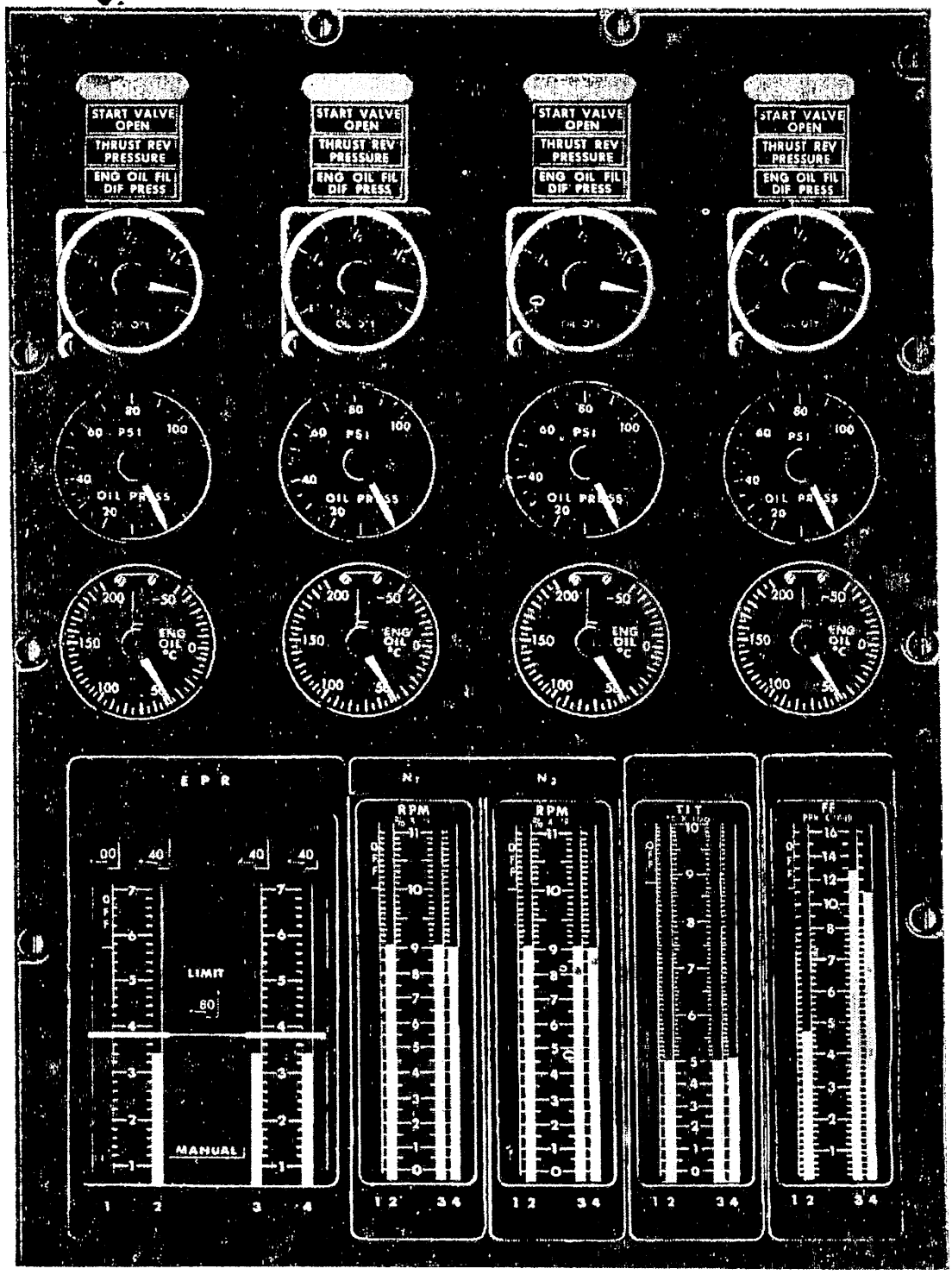

C5A-1-7-025

Figure 1-14.

ENGINE FIRE DETECTION AND EXTINGUISHING SYSTEM CONTROLS AND INDICATORS

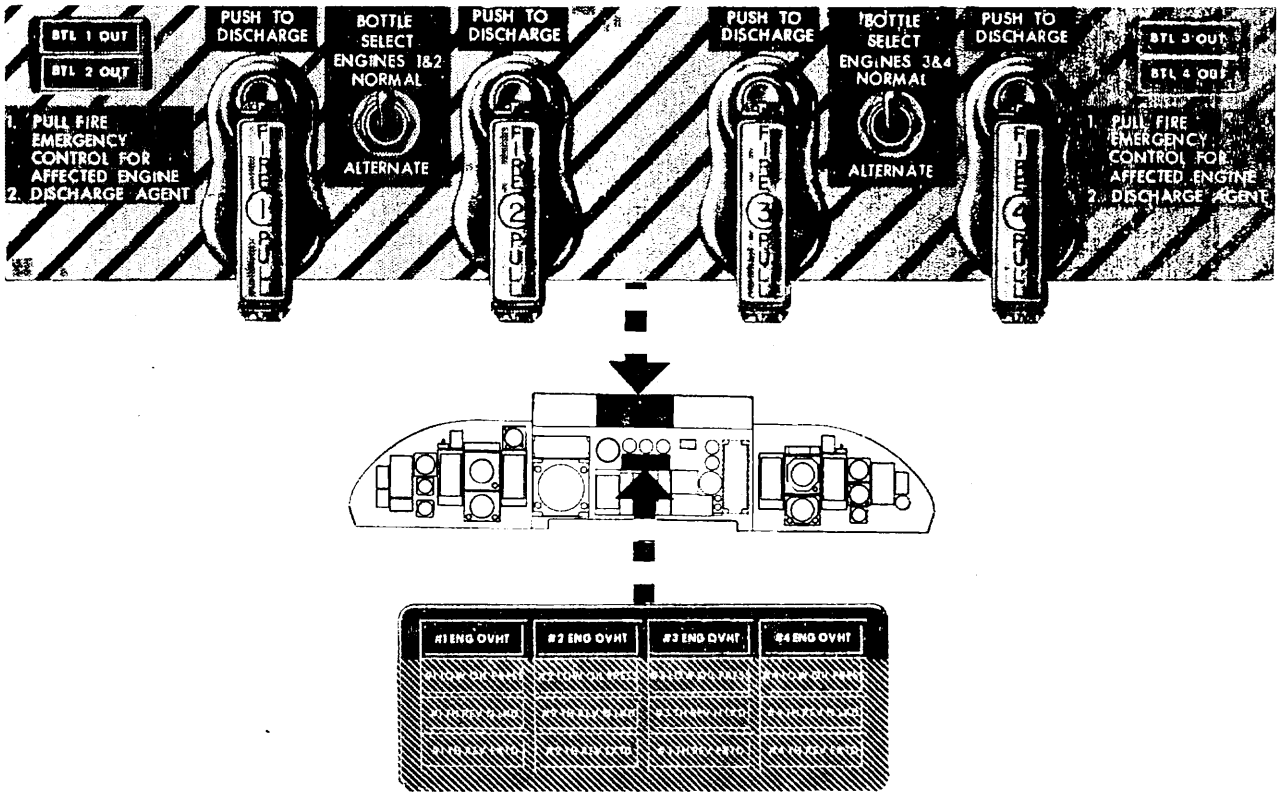

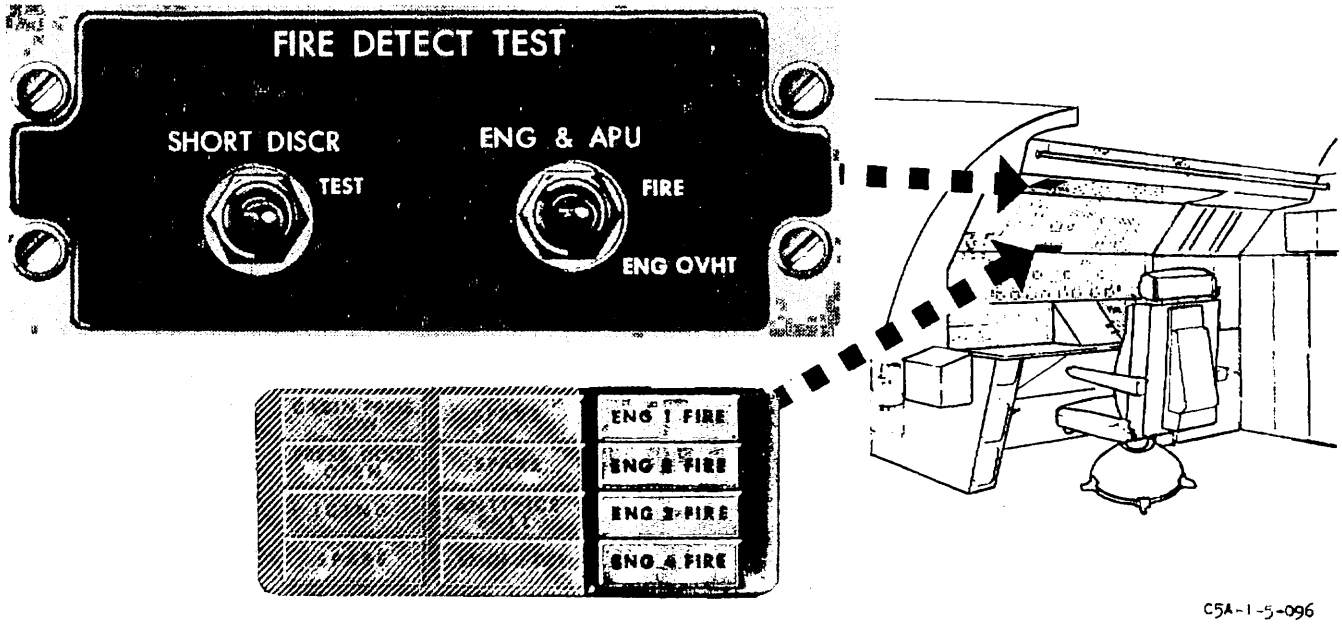

C5A-1-5-096

Figure 1-15.

ENGINE FIRE DETECTION AND EXTINGUISHING SYSTEM

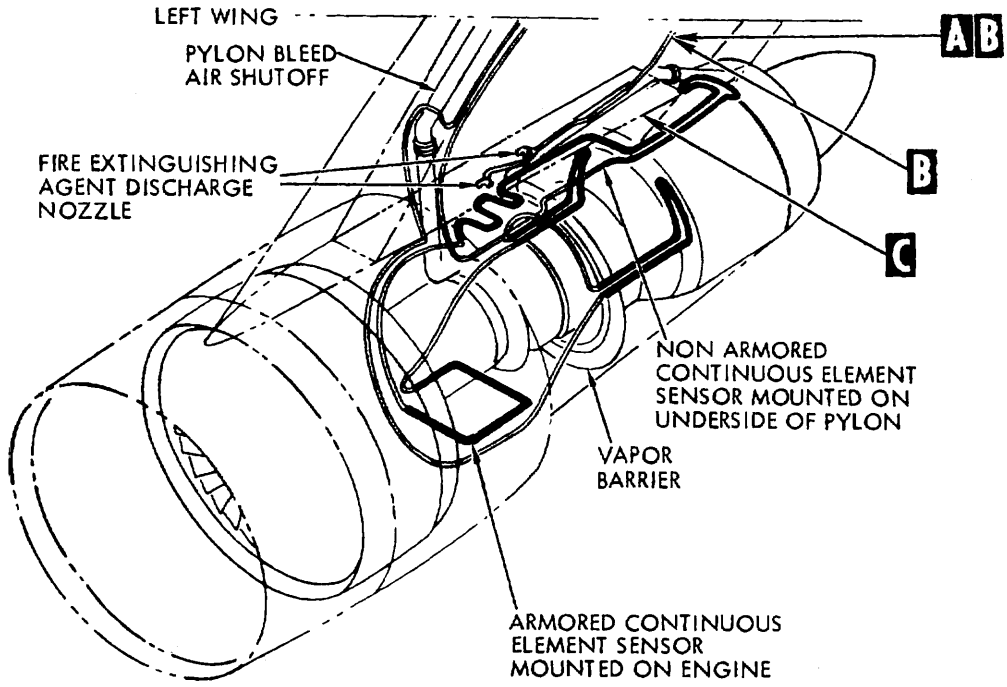

NOTE

INSTALLATION IS TYPICAL FOR ENGINES NO. 3 AND 4

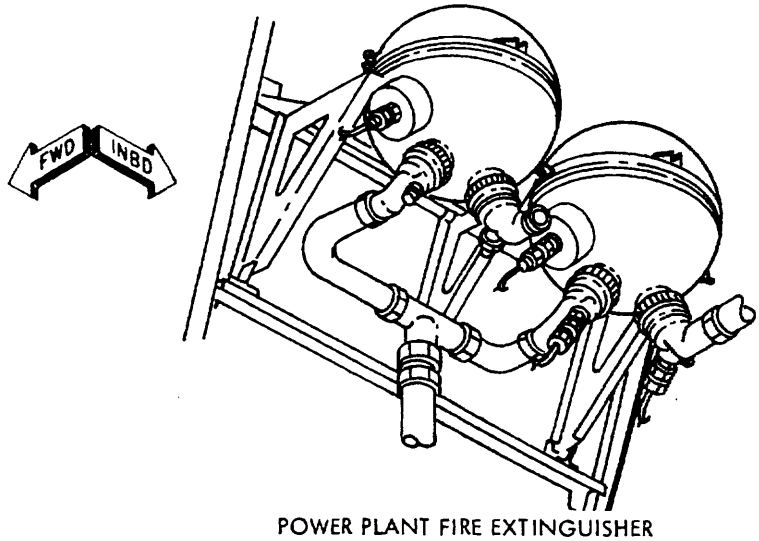

POWER PLANT FIRE EXTINGUISHER

A

ON 70170 AND UP

C5A-1-X2/0-180-1

Figure 1-16. (Sheet 1 of 2)

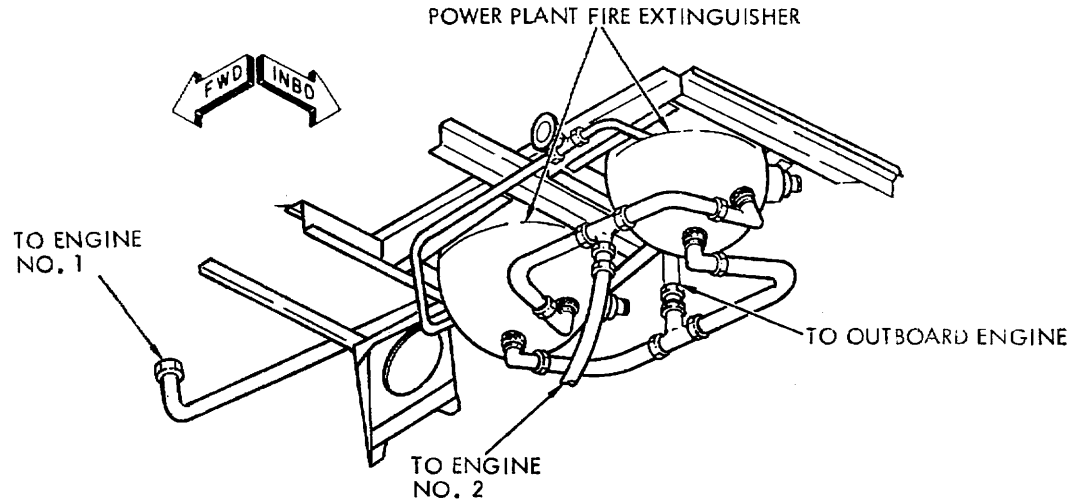

B

ON 68304, 68307, 70167 AND 70168

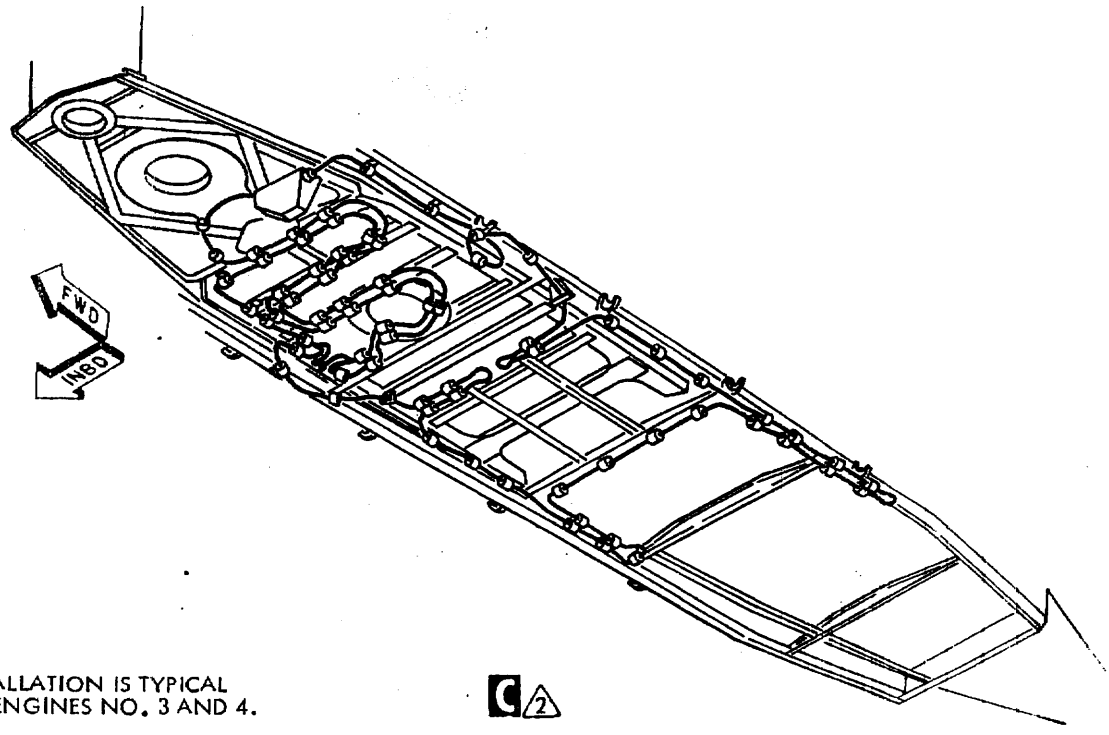

NOTE

1. INSTALLATION IS TYPICAL FOR ENGINES NO. 3 AND 4.

C (2)

(2) ON 90012 AND UP AND AIRPLANES MODIFIED BY T.O. 654.

C5A-1-X2/D-180-2

Figure 1-16. (Sheet 2 of 2)

AUXILIARY POWER UNITS

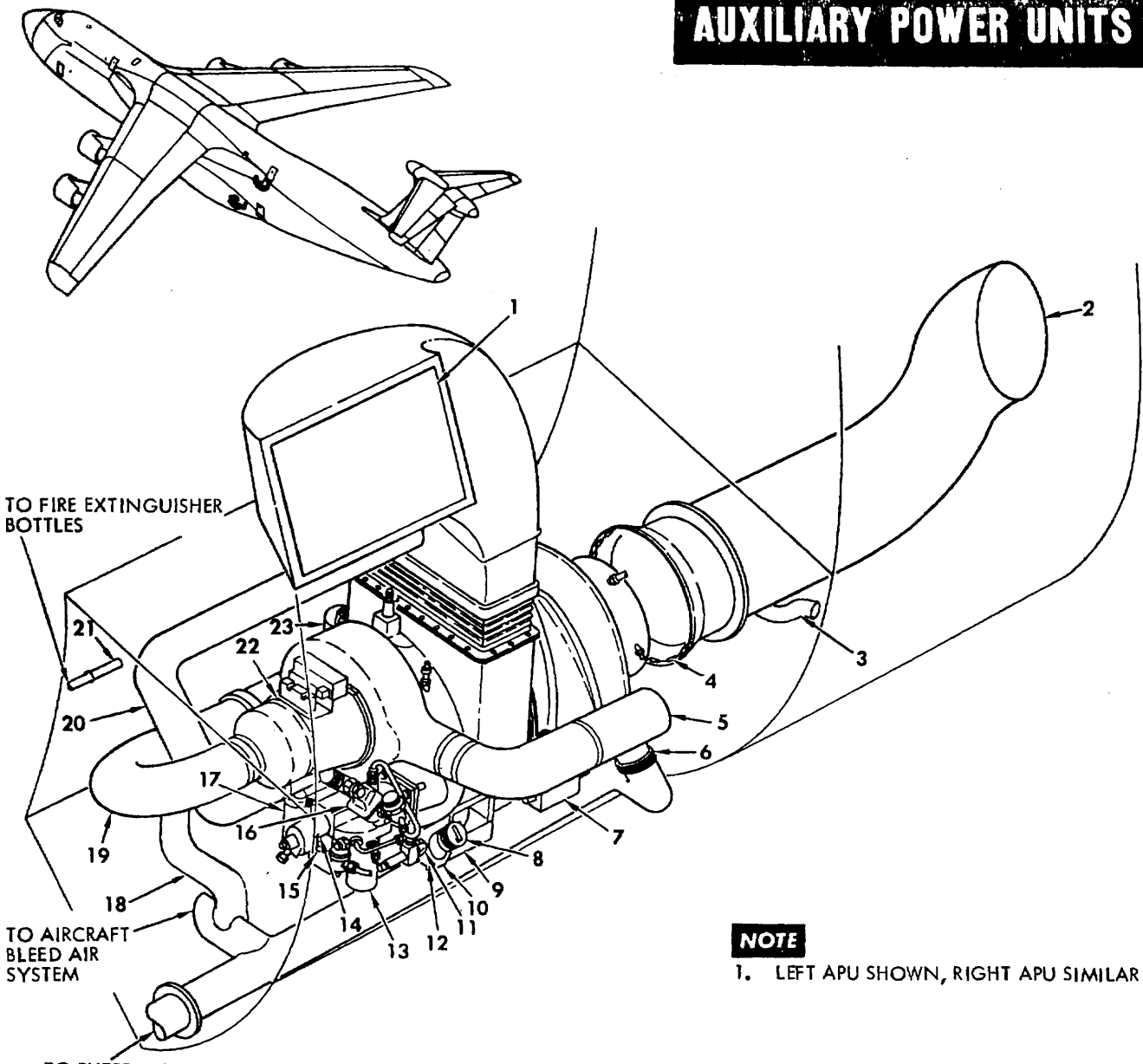

NOTE

1. LEFT APU SHOWN, RIGHT APU SIMILAR

1. AIR INLET DOOR
2. TURBINE EXHAUST DUCT
3. AIR TURBINE MOTOR EXHAUST DUCT
4. FIRE DETECTION ELEMENTS
5. GENERATOR COOLING AIR DISCHARGE DUCT
6. BLEED AIR OUTLET
7. IGNITION EXCITER
8. OIL TANK FILLER CAP
9. ELECTRONIC CONTROL
10. OIL TANK
11. OIL LEVEL SIGHT GAGE
12. MAGNETIC OIL SUMP DRAIN PLUG
13. FUEL FILTER
14. START COUNTER
15. HOUR METER
16. HYDRAULIC STARTER
17. OIL FILTER
18. AIR TURBINE MOTOR INLET DUCT
19. GENERATOR COOLING AIR DUCT
20. COOLING AIR FAN INLET DUCT
21. FIRE EXTINGUISHER NOZZLE
22. GENERATOR
23. OIL COOLER

C5A-1-X4/0-065

Figure 1-17.

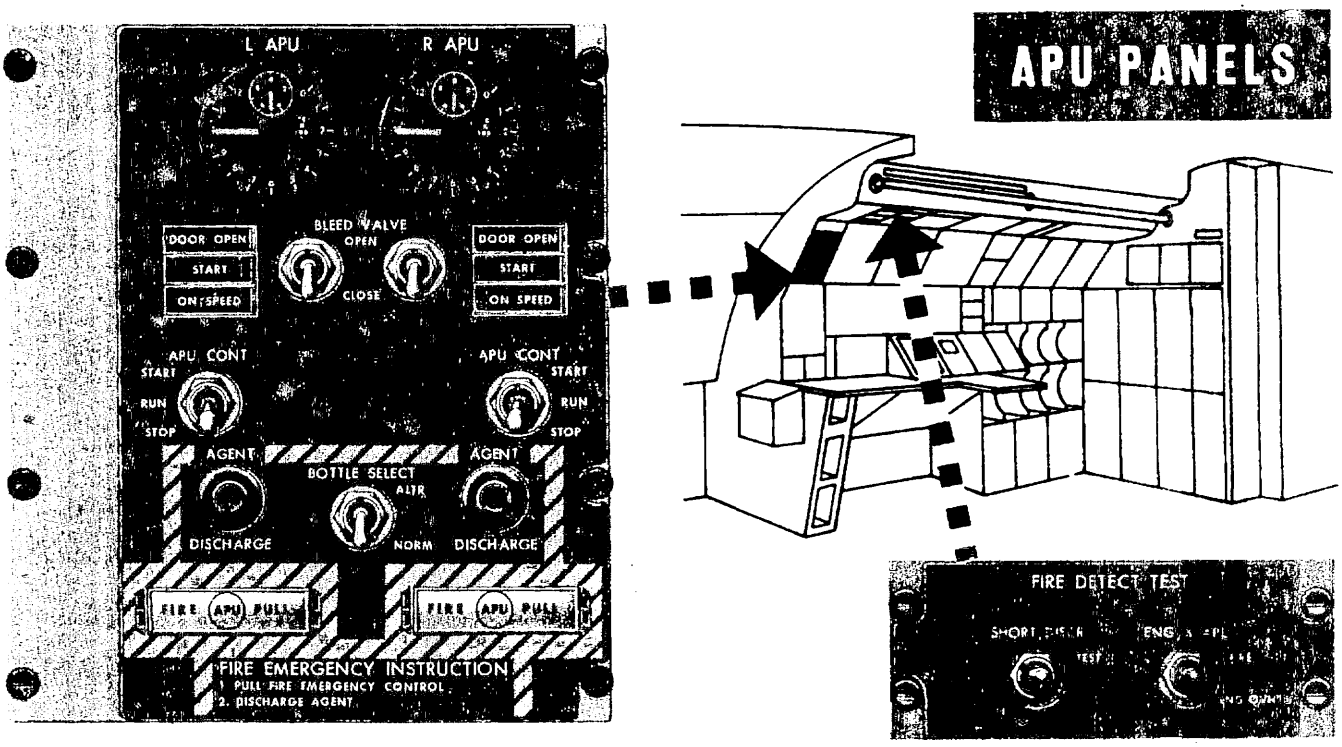
APU PANELS
L APU
R APU
DOOR OPEN
START
ON SPEED
BLEED VALVE
OPEN
CLOSE
APU CONT
START
RUN
STOP
AGENT
BOTTLE SELECT
ALTR
NORM
DISCHARGE
FIRE APU PULL
FIRE EMERGENCY INSTRUCTION
1. PULL FIRE EMERGENCY CONTROL.
2. DISCHARGE AGENT.
FIRE DETECT TEST
C5A-1-0-068

Figure 1-18.

AUXILIARY POWER UNITS AND AIR TURBINE MOTOR FIRE DETECTION AND EXTINGUISHING SYSTEM

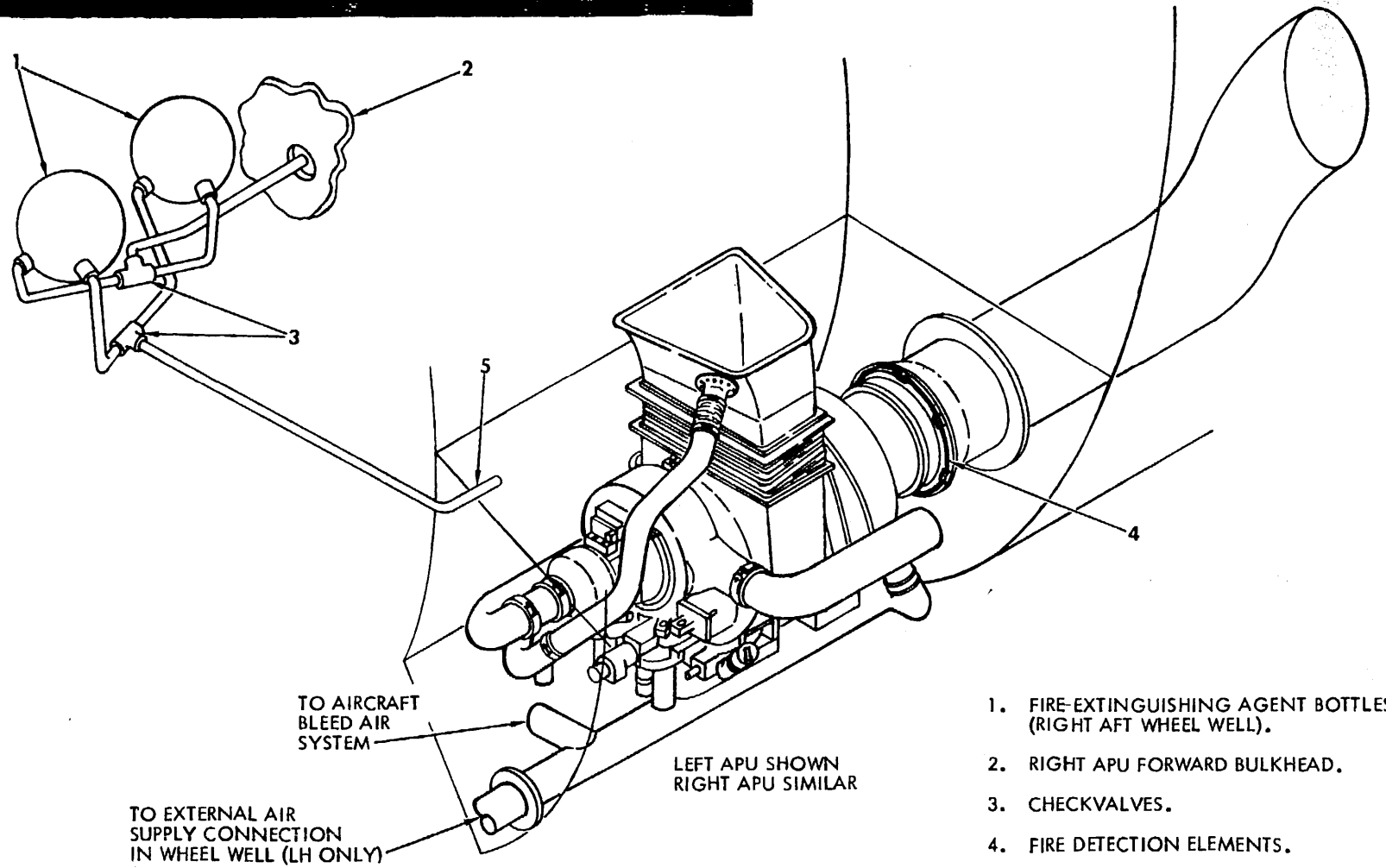

1. FIRE-EXTINGUISHING AGENT BOTTLES (RIGHT AFT WHEEL WELL).
2. RIGHT APU FORWARD BULKHEAD.
3. CHECKVALVES.
4. FIRE DETECTION ELEMENTS.
5. FIRE EXTINGUISHING AGENT DISCHARGE NOZZLE.

C5A-1-X2/0-181

Figure 1-19.

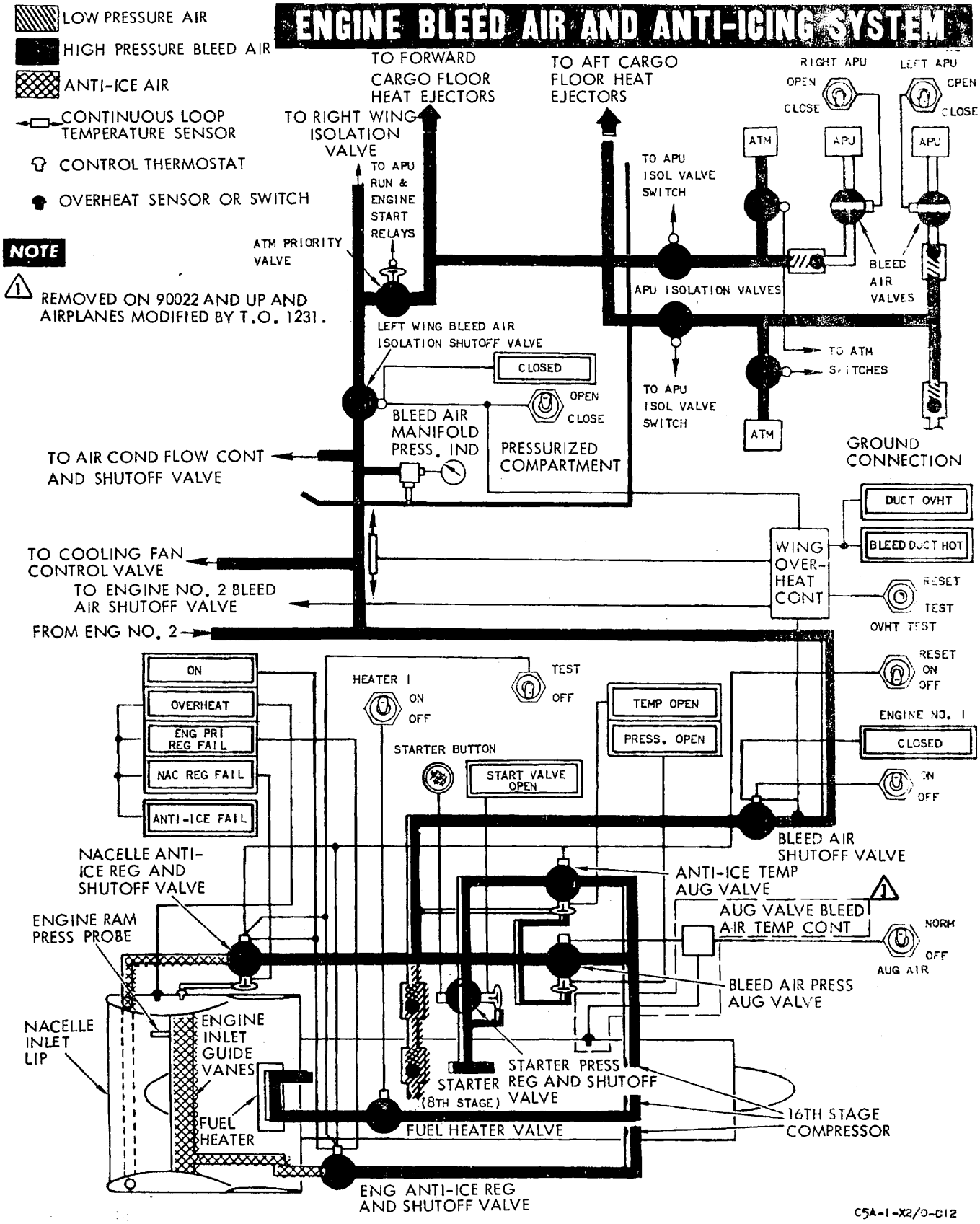
ENGINE BLEED AIR AND ANTI-ICING SYSTEM
LOW PRESSURE AIR
HIGH PRESSURE BLEED AIR
ANTI-ICE AIR
CONTINUOUS LOOP TEMPERATURE SENSOR
CONTROL THERMOSTAT
OVERHEAT SENSOR OR SWITCH
NOTE
1 REMOVED ON 90022 AND UP AND AIRPLANES MODIFIED BY T.O. 1231.
TO FORWARD CARGO FLOOR HEAT EJECTORS
TO AFT CARGO FLOOR HEAT EJECTORS
TO RIGHT WING ISOLATION VALVE
TO APU RUN & ENGINE START RELAYS
ATM PRIORITY VALVE
TO APU ISOL VALVE SWITCH
RIGHT APU
LEFT APU
OPEN
CLOSE
ATM
APU
APU ISOLATION VALVES
BLEED AIR VALVES
LEFT WING BLEED AIR ISOLATION SHUTOFF VALVE
CLOSED
OPEN
CLOSE
BLEED AIR MANIFOLD PRESS. IND
PRESSURIZED COMPARTMENT
TO ATM SWITCHES
GROUND CONNECTION
TO AIR COND FLOW CONT AND SHUTOFF VALVE
TO COOLING FAN CONTROL VALVE
TO ENGINE NO. 2 BLEED AIR SHUTOFF VALVE
FROM ENG NO. 2
DUCT OVHT
BLEED DUCT HOT
WING OVER-HEAT CONT
RESET
TEST
OVHT TEST
ON
OVERHEAT
ENG PRI REG FAIL
NAC REG FAIL
ANTI-ICE FAIL
HEATER 1
ON
OFF
TEST
TEMP OPEN
PRESS. OPEN
STARTER BUTTON
START VALVE OPEN
RESET
ON
OFF
ENGINE NO. 1
CLOSED
BLEED AIR SHUTOFF VALVE
NACELLE ANTI-ICE REG AND SHUTOFF VALVE
ANTI-ICE TEMP AUG VALVE
AUG VALVE BLEED AIR TEMP CONT
NORM
OFF
AUG AIR
ENGINE RAM PRESS PROBE
BLEED AIR PRESS AUG VALVE
NACELLE INLET LIP
ENGINE INLET GUIDE VANES
FUEL HEATER
STARTER (8TH STAGE)
STARTER PRESS REG AND SHUTOFF VALVE
FUEL HEATER VALVE
16TH STAGE COMPRESSOR
ENG ANTI-ICE REG AND SHUTOFF VALVE
C5A-1-X2/0-012

Figure 1-20.

ENVIRONMENTAL PANEL

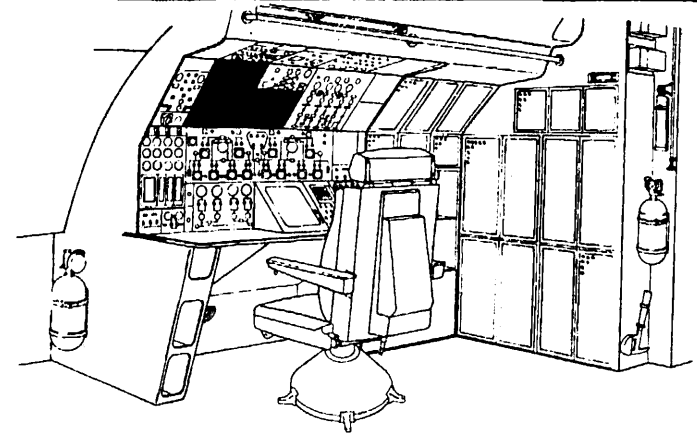

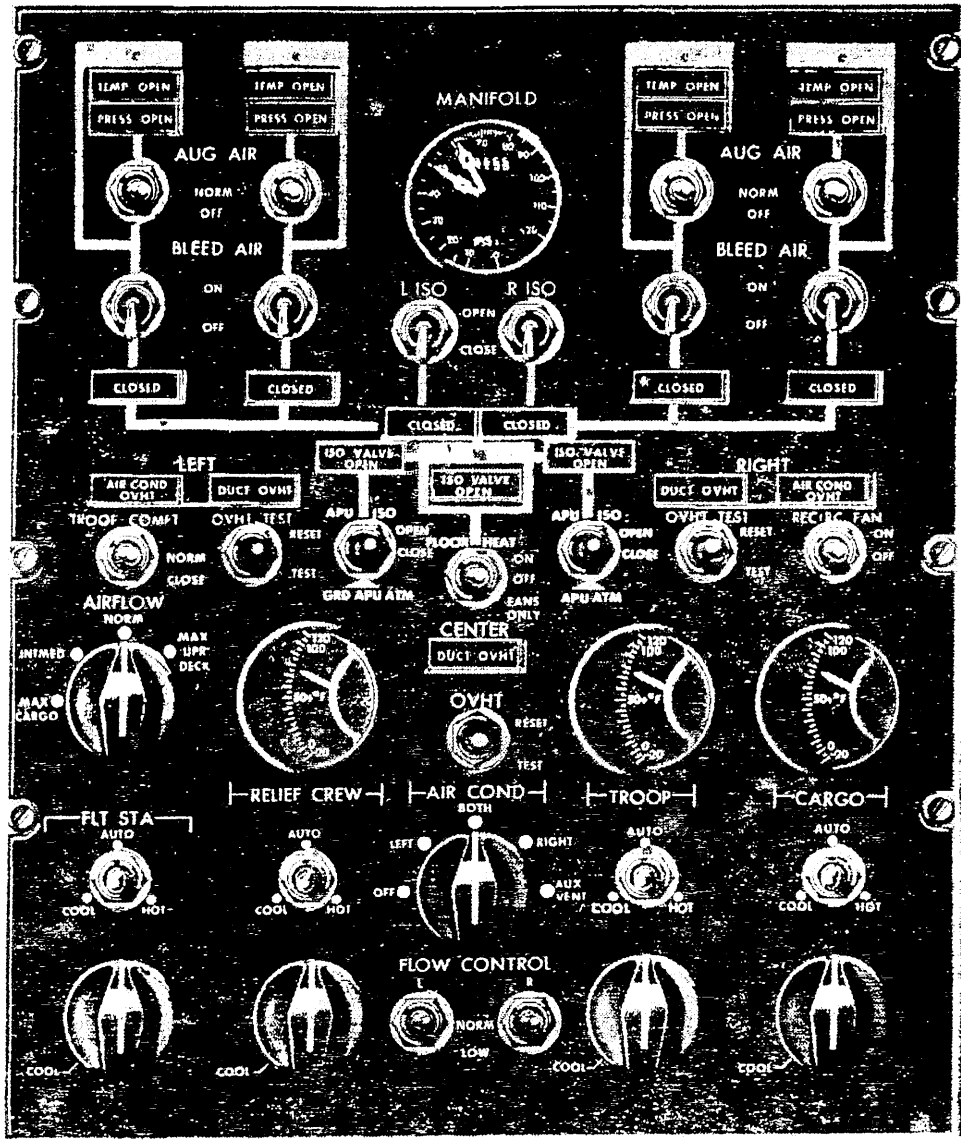

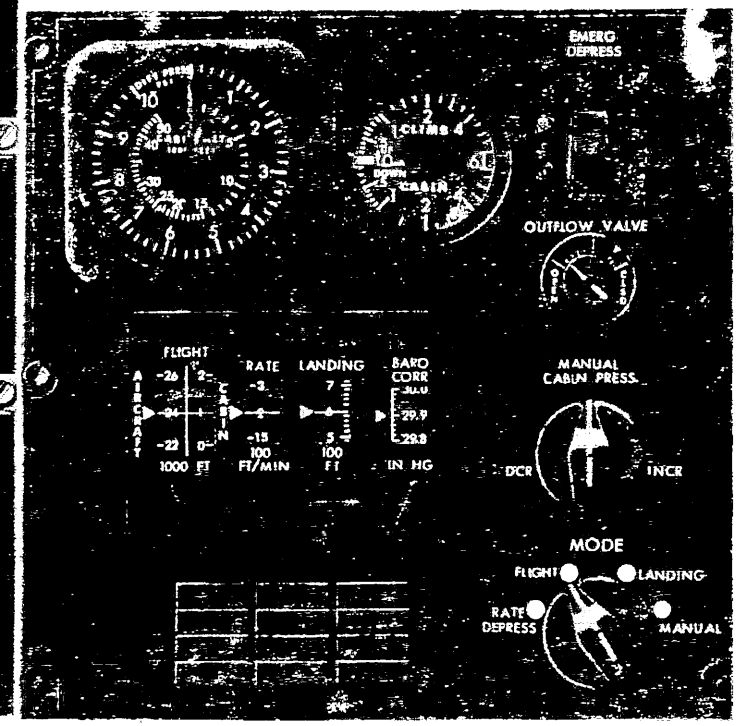

C5A-1-X3/0-013

Figure 1-21.

BLEED AIR AND ENVIRONMENTAL SYSTEMS BASIC COMPONENTS AND AIR DISTRIBUTION DUCTING

1. AIR DISTRIBUTION TO THE FLIGHT STATION, RELIEF CREW COMPARTMENT AND AFT TROOP COMPARTMENT
2. CONDITIONED AIR CROSSOVER.
3. MIXING CHAMBER
4. AIR CYCLE REFRIGERATION UNIT-RIGHT SYSTEM
5. HEAT EXCHANGERS - RIGHT SYSTEM
6. BLEED AIR SOURCE - NO. 3 AND 4 ENGINES
7. BLEED AIR DUCTING TO THE TIRE INFLATION AND KNEELING SYSTEM
8. BLEED AIR DUCTING TO THE FORWARD CARGO COMPARTMENT UNDERFLOOR HEATING SYSTEM
9. APU - RIGHT SIDE
10. AIR TURBINE MOTORS
11. APU-LEFT SIDE
12. EXTERNAL PNEUMATIC AIR SUPPLY CONNECTOR
13. BLEED AIR DUCTING TO THE AFT CARGO COMPARTMENT UNDERFLOOR HEATING SYSTEM
14. CONDITIONED AIR DUCTING TO THE CARGO COMPARTMENT
15. AIR CYCLE REFRIGERATION UNIT- LEFT SYSTEM
16. BLEED AIR SOURCE- NO. 1 AND NO. 2 ENGINES
17. HEAT EXCHANGERS- LEFT SYSTEM

NOTE

P = PRIMARY
S = SECONDARY

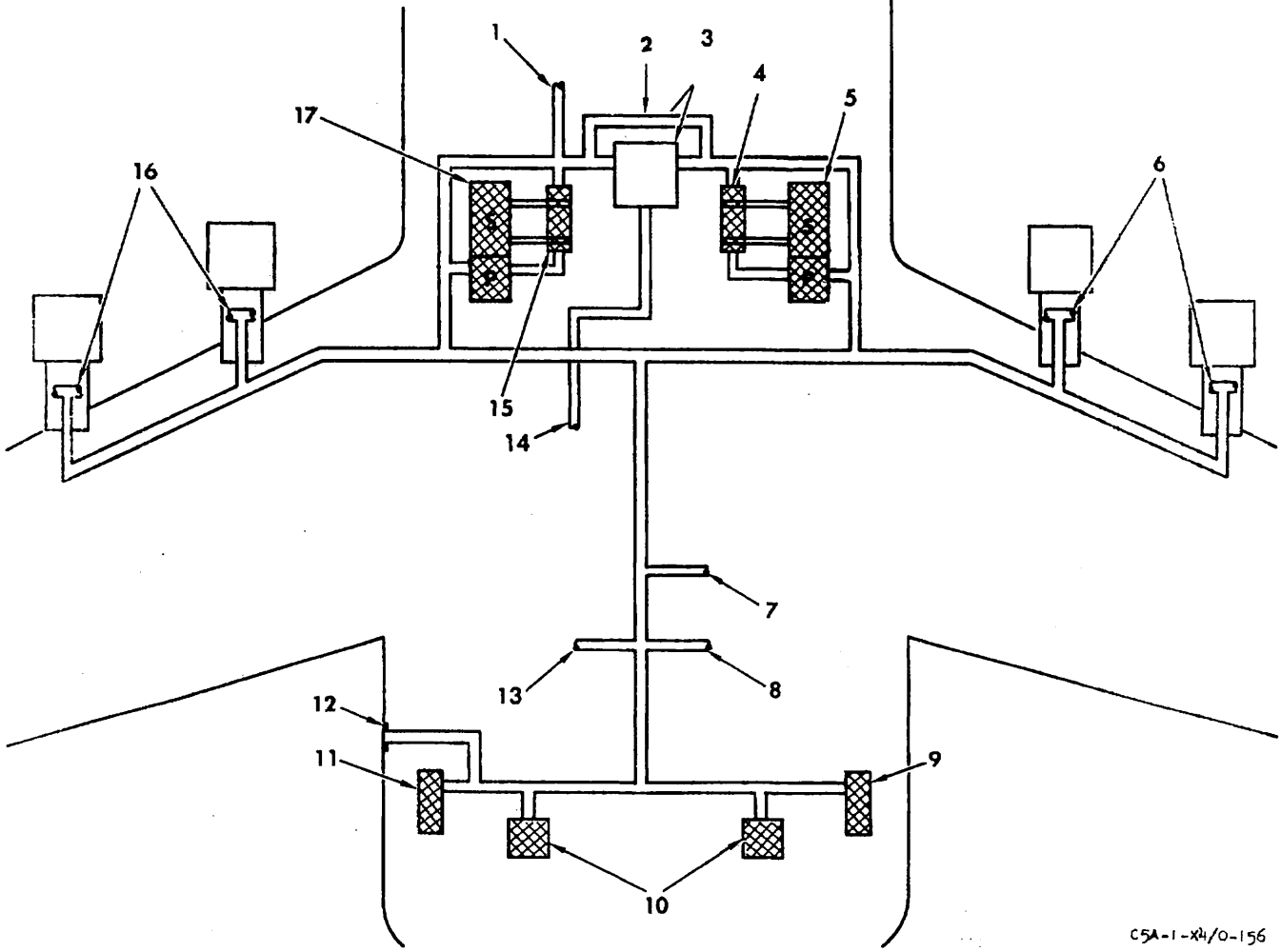

Figure 1-22.

(This page intentionally left blank.)

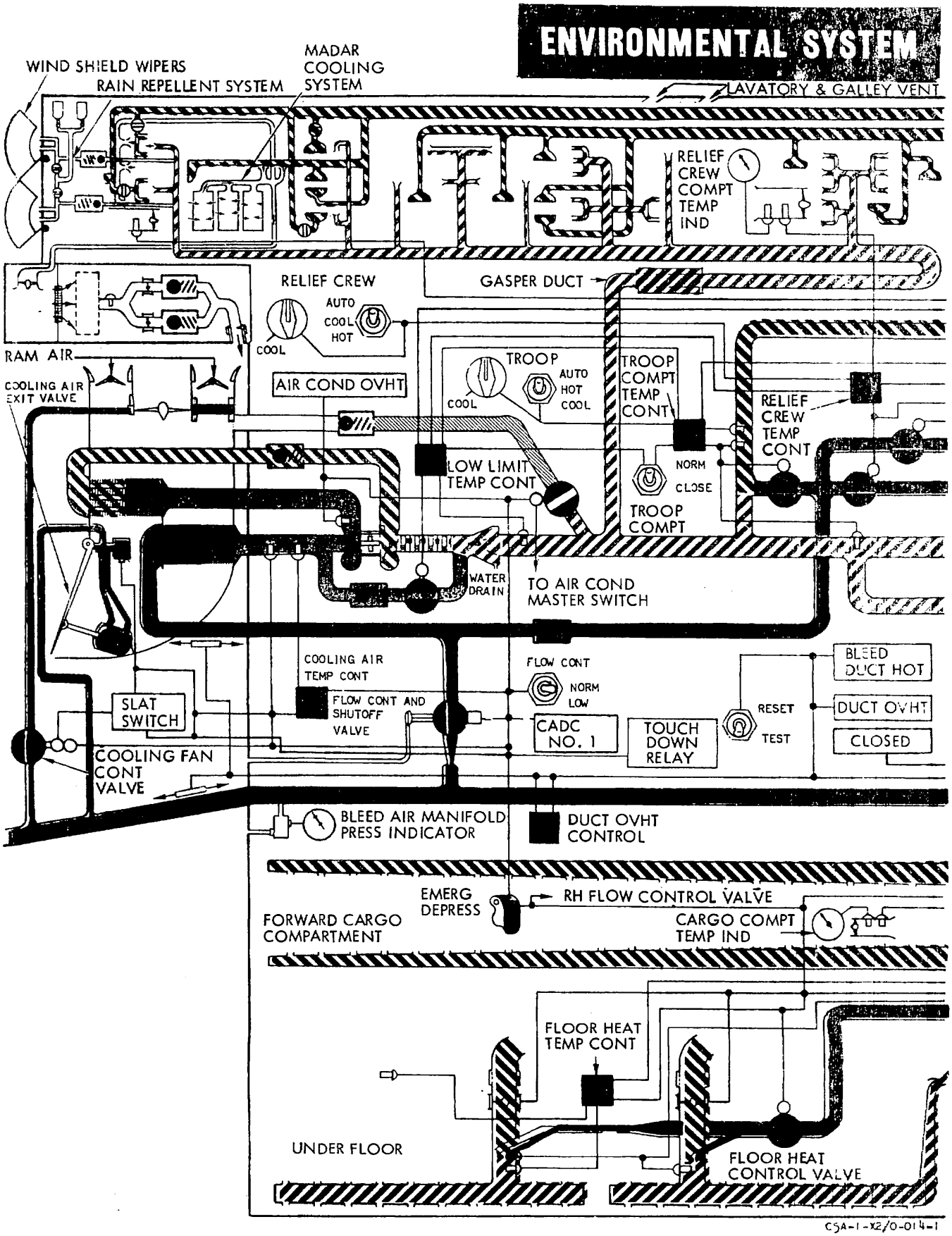

Figure 1-23. (Sheet 1 of 3)

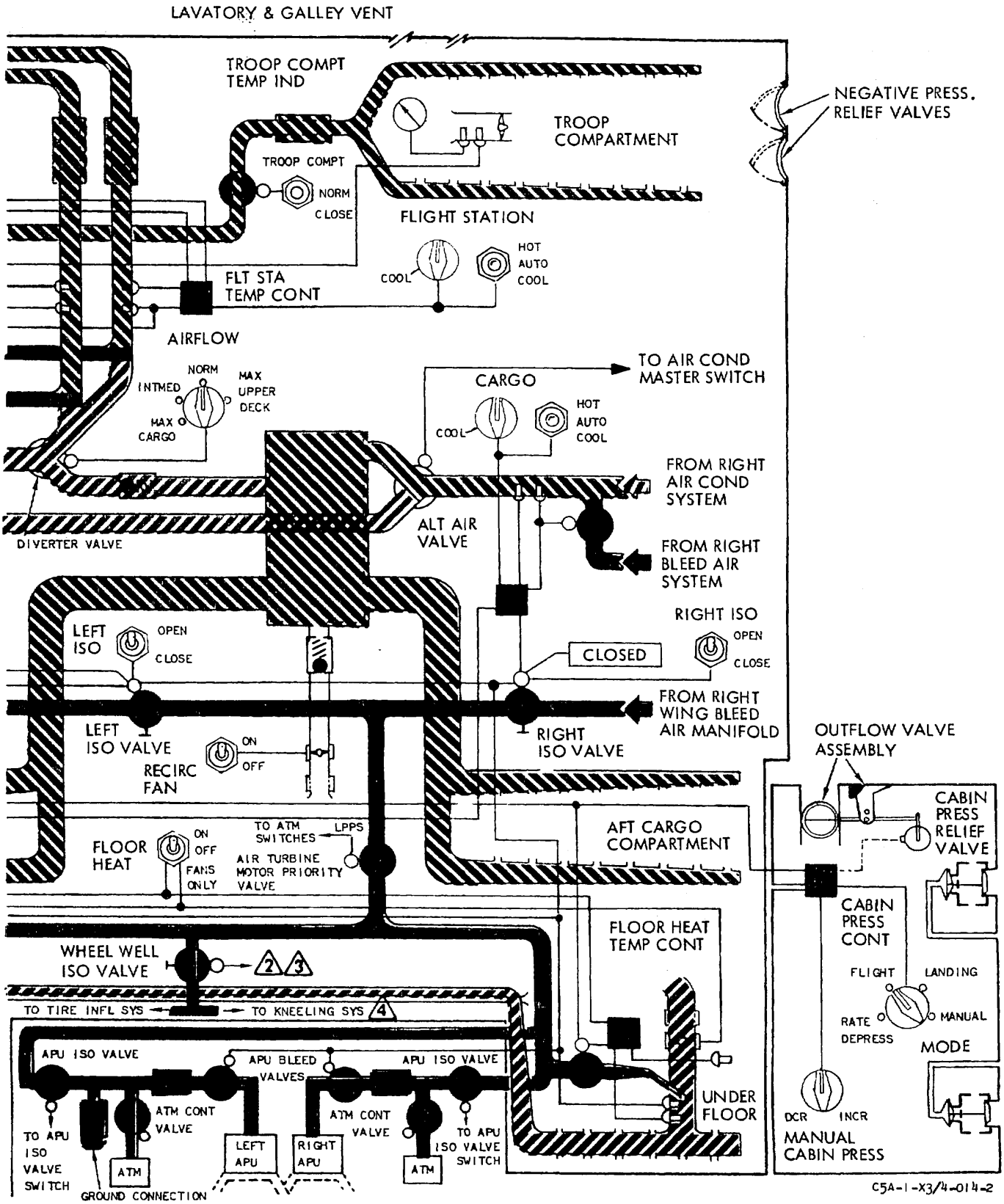

Figure 1-23. (Sheet 2 of 3)

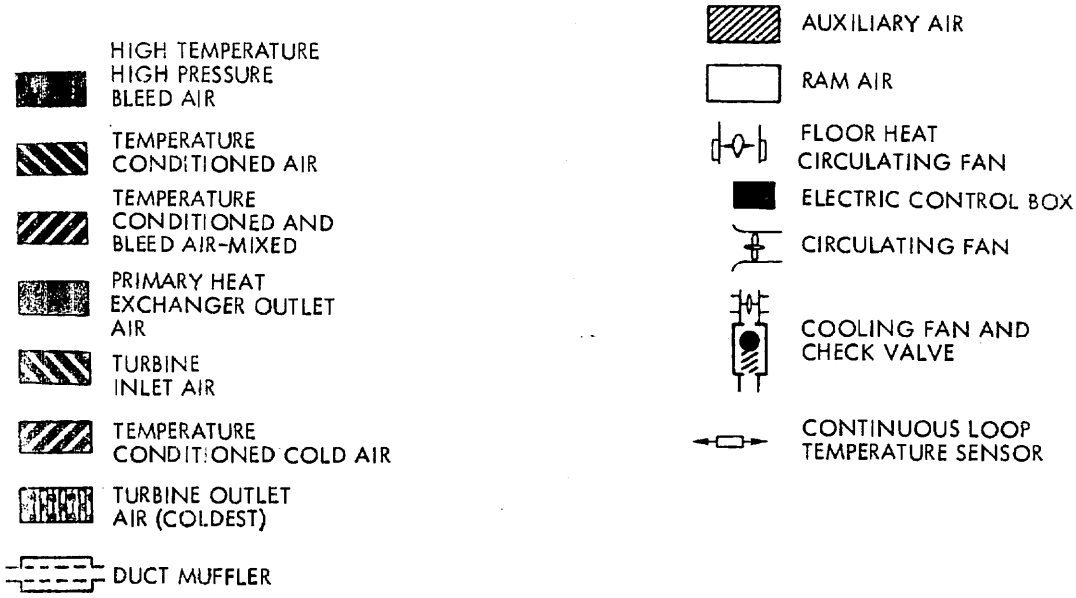

NOTE

1. RIGHT AIR CONDITIONING SYSTEM IS THE SAME EXCEPT FOR THE AIR DUCTING.

(2) ON 68304, 68307, 70168 AND 70170 THRU 00460 NOT MODIFIED BY T.O. 1345, CONTROL OF THIS VALVE IS ACCOMPLISHED THROUGH THE PWR SUPPLY AND ISO VALVE SWITCH LOCATED ON THE AUX KNEEL CONTROL SWITCHES PANEL WHICH IS ON THE RH SIDE OF THE CARGO COMPARTMENT.

(3) ON 00461 AND UP AND AIRPLANES MODIFIED BY T.O. 1345, CONTROL OF THIS VALVE IS ACCOMPLISHED THRU THE WHEEL WELL ISO VALVE SWITCH LOCATED AT FUS. STA. 1480 ON THE RIGHT HAND SIDE OF THE CARGO COMPARTMENT.

(4) ON 68304, 68307, 70167, 70168 AND 70170 THROUGH 00460 NOT MODIFIED BY T.O. 1345.

C5A-1-X3/4-014-3

Figure 1-23. (Sheet 3 of 3)

AIR CONDITIONING MASTER-SWITCH POSITION CHART

COMPONENTS AFFECTED	AIR CONDITIONING MASTER SWITCH POSITION				
	OFF	LEFT	BOTH	RIGHT	AUX VENT
LH FLOW CONT VALVE ⚠1	CLOSED	MODULATING	MODULATING	CLOSED	CLOSED
RH FLOW CONT VALVE ⚠1	CLOSED	CLOSED	MODULATING	MODULATING	CLOSED
LH COOL FAN VALVE	CLOSED	MODULATING BELOW M = 0.3 OR WHEN SLATS EXTENDED	MODULATING BELOW M = 0.3 OR WHEN SLATS EXTENDED	CLOSED	CLOSED OPEN (GND)
RH COOL FAN VALVE	CLOSED	CLOSED	MODULATING BELOW M = 0.3 OR WHEN SLATS EXTENDED	MODULATING BELOW M = 0.3 OR WHEN SLATS EXTENDED	CLOSED
FLOOR TEMP CONTROL	AS SELECTED	AS SELECTED	AS SELECTED	AS SELECTED	POWER OFF VALVES CLOSED
LH LOW LIMIT TEMP CONT	POWER OFF	CONTROLLING	CONTROLLING	POWER OFF	POWER OFF
RH LOW LIMIT TEMP CONT	POWER OFF	POWER OFF	CONTROLLING	CONTROLLING	POWER OFF
CARGO COMPT TEMP CONTROL	POWER OFF	POWER OFF	CONTROLLING	CONTROLLING	POWER OFF
FLT STATION TEMP CONTROL	POWER OFF	CONTROLLING	CONTROLLING	POWER OFF	POWER OFF
RELIEF CREW TEMP CONTROL	POWER OFF	CONTROLLING	CONTROLLING	POWER OFF	POWER OFF
TROOP COMPT TEMP CONTROL	POWER OFF	CONTROLLING	CONTROLLING	POWER OFF	POWER OFF
LH COOL AIR TEMP CONT	POWER OFF	CONTROLLING	CONTROLLING	POWER OFF	CONTROLLING(AIR) POWER OFF (GND)
RH COOL AIR TEMP CONT	POWER OFF	POWER OFF	CONTROLLING	CONTROLLING	POWER OFF
RAM AIR VENT VALVE	CLOSED	CLOSED	CLOSED	CLOSED	OPEN
ALTERNATE AIR VALVE	UPPER DECK PORT CLOSED	UPPER DECK PORT CLOSED	UPPER DECK PORT CLOSED	CARGO COMPT PORT CLOSED	BOTH PORTS OPEN
LH COOL AIR EXIT VALVE	OPEN	MODULATING	MODULATING	OPEN	CLOSED (AIR) OPEN (GND)
RH COOL AIR EXIT VALVE	OPEN	OPEN	MODULATING	MODULATING	OPEN

NOTE

⚠1 ON LOW FLOW SCHEDULE BELOW MACH 0.3, WHEN WING SLATS ARE EXTENDED, OR BY FLOW CONTROL SWITCH.

2. THIS CHART ASSUMES THAT ELECTRICAL POWER AND BLEED AIR ARE AVAILABLE TO THE APPROPRIATE COMPONENT.

C5A-1-X4/0-015

Figure 1-24.

AIR CONDITIONING AIRFLOW SELECTOR CHART

TROOP COMPT SWITCH POSITION	AIRFLOW SELECTOR POSITION	TROOP COMPT SHUTOFF VALVE POSITION	DIVERTER VALVE POSITION	TROOP COMPT TEMP CONT VALVE OPERATION	FLT STA & RELIEF CREW TEMP CONT VALVE OPERATION	PERCENT (±5) FLOW FROM LH AIR CONDITIONING UNIT			
						TROOP COMPT	FLIGHT STATION	RELIEF CREW	CARGO COMPT
NORMAL	NORMAL (N)	N	N	MANUAL OR AUTO	MANUAL OR AUTO	44.6%	20%	20%	15.4%
	INTMED	I	I	MANUAL OR AUTO	MANUAL OR AUTO	27%	20%	20%	33%
	MAX UPR DECK	U	U	MANUAL OR AUTO	MANUAL OR AUTO	44.6%	27.7%	27.7%	0
	MAX CARGO (C)	CLOSED	C	MANUAL ONLY	CLOSED	0	0	0	100%
CLOSED	NORMAL (N)	CLOSED	T	CLOSED	MANUAL OR AUTO	0	20%	20%	60%
	INTMED (I)	CLOSED	I	CLOSED	MANUAL OR AUTO	0	27.4%	27.4%	45.2%
	MAX UPR DECK	CLOSED	U	CLOSED	MANUAL OR AUTO	0	50%	50%	0
	MAX CARGO (C)	CLOSED	C	MANUAL ONLY	CLOSED	0	0	0	100%

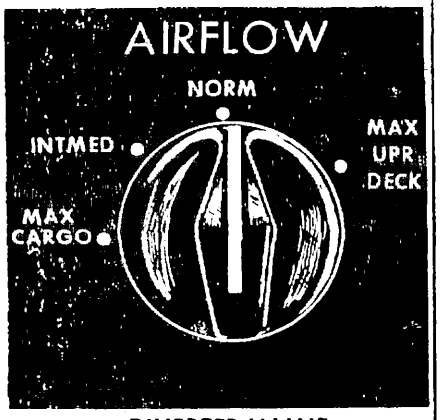

DIVERTER VALVE SELECTOR

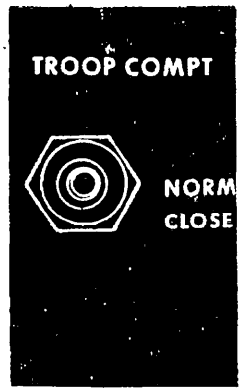

TROOP COMPT SWITCH

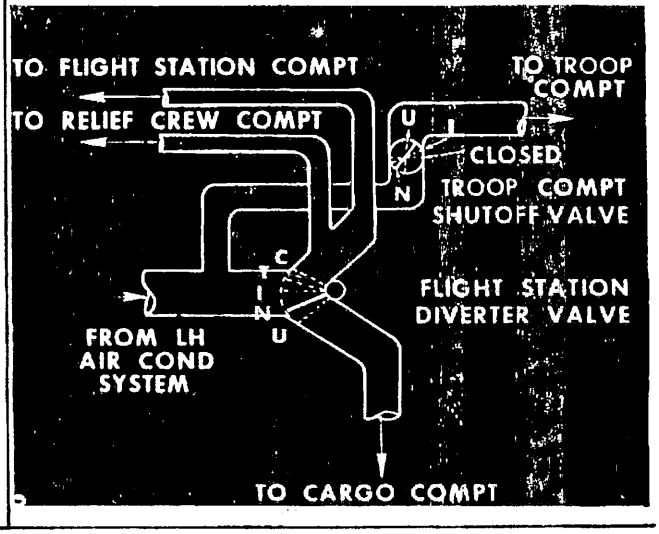

C5A-1-7-029

Figure 1-25.

CABIN PRESSURE ALTITUDE CHART

NOTE

1. CABIN ALTITUDE LIMIT CONTROL
2. DIFFERENTIAL PRESSURE CONTROL BEGINS OPENING SAFETY VALVE (8.4 PSIG) THE AUTOMATIC Δ P CONTROL (PART OF THE AUTO SYSTEM) WILL TAKE OVER WHEN THE Δ P REACHES 8.2 ± 0.1 PSIG.
3. DIFFERENTIAL PRESSURE CONTROL OPENS SAFETY VALVE TO FULL OPEN POSITION (8.7 PSIG)

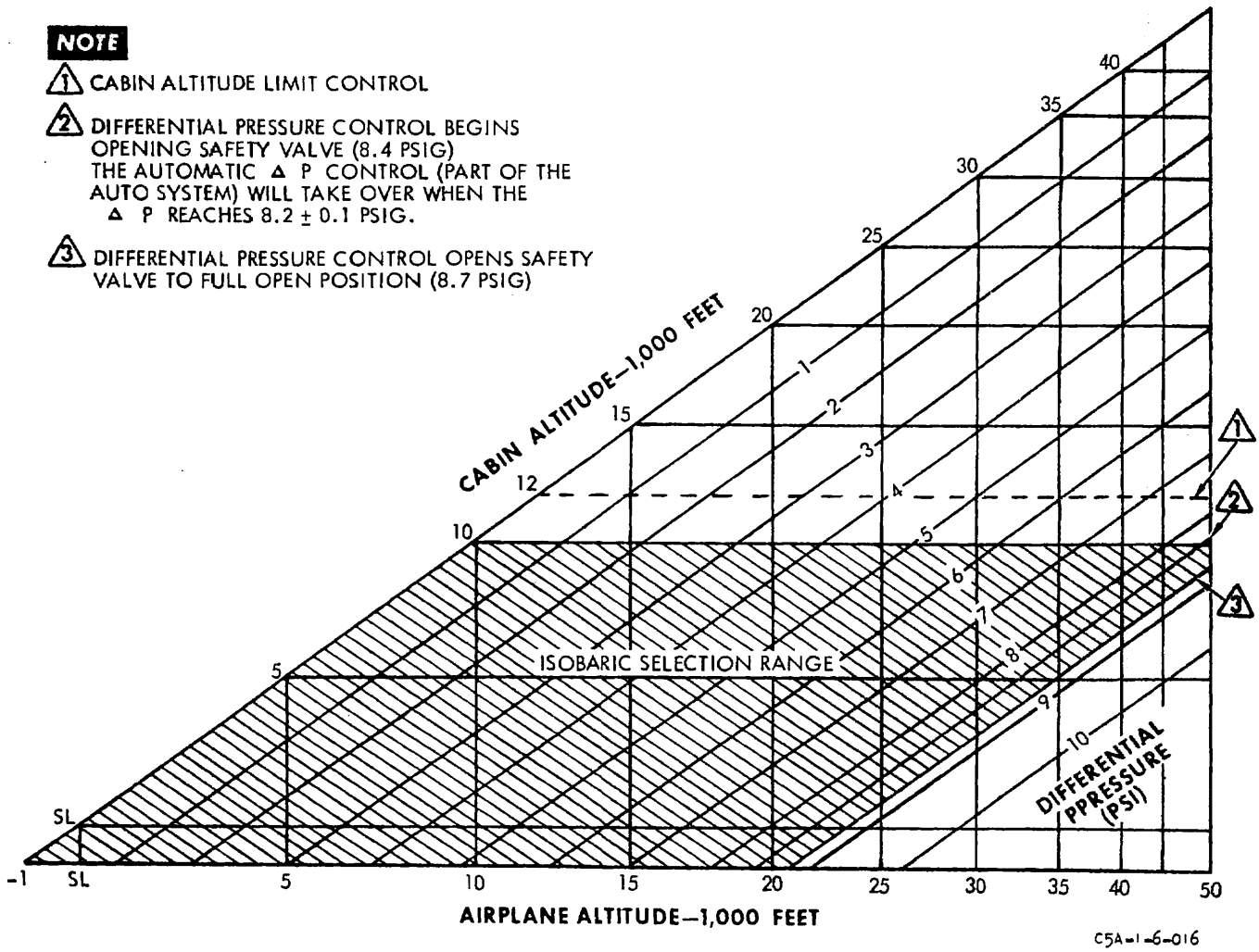

Figure 1-26.

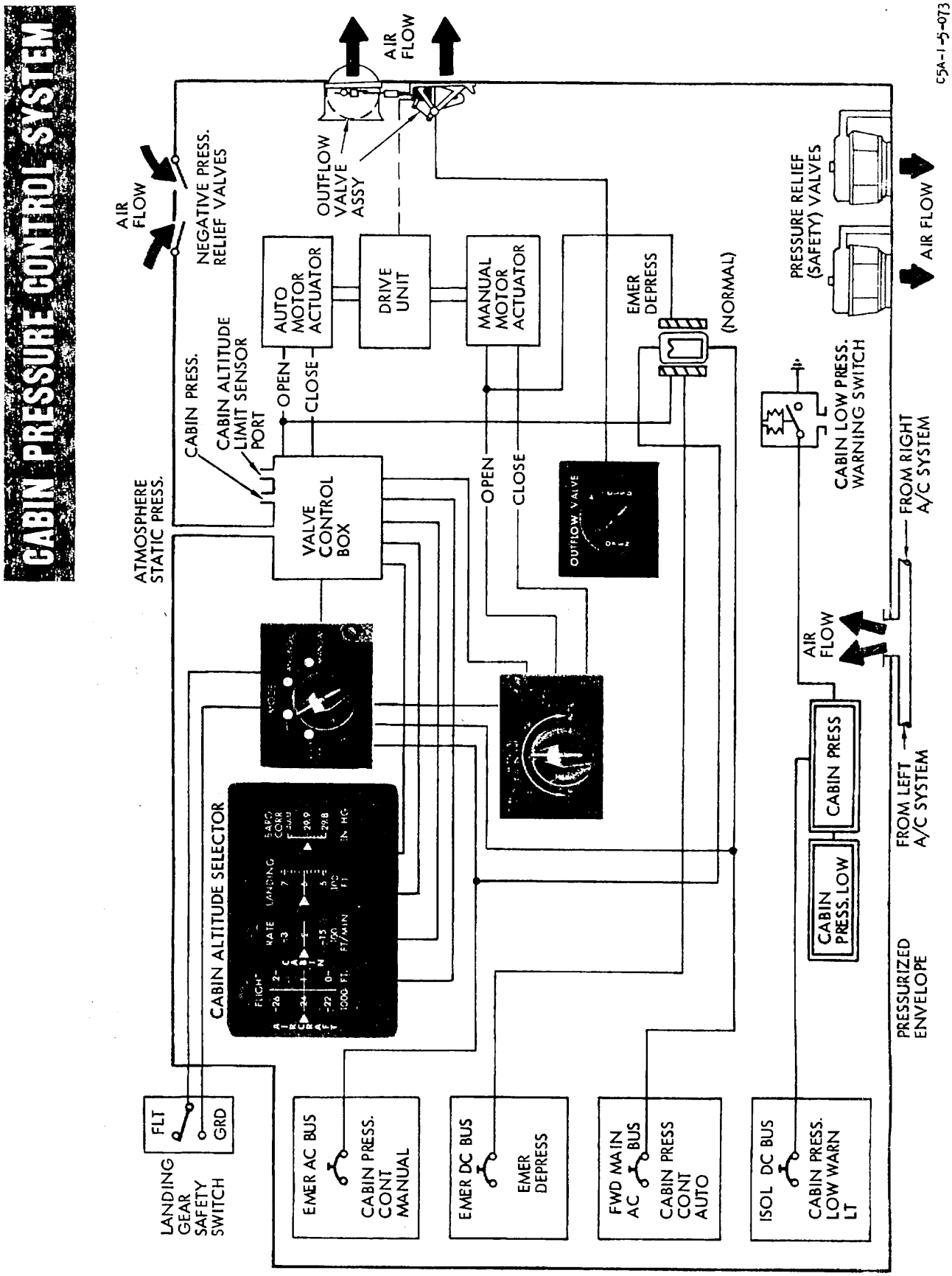
CABIN PRESSURE CONTROL SYSTEM
AIR FLOW
NEGATIVE PRESS. RELIEF VALVES
OUTFLOW VALVE ASSY
AIR FLOW
AUTO MOTOR ACTUATOR
DRIVE UNIT
MANUAL MOTOR ACTUATOR
EMER DEPRESS
(NORMAL)
PRESSURE RELIEF (SAFETY) VALVES
AIR FLOW
CABIN PRESS.
CABIN ALTITUDE LIMIT SENSOR PORT
OPEN
CLOSE
ATMOSPHERE STATIC PRESS.
VALVE CONTROL BOX
OPEN
CLOSE
OUTFLOW VALVE
CABIN LOW PRESS. WARNING SWITCH
FROM RIGHT A/C SYSTEM
CABIN ALTITUDE SELECTOR
AIR FLOW
CABIN PRESS
CABIN PRESS. LOW
FROM LEFT A/C SYSTEM
PRESSURIZED ENVELOPE
FLT
GRD
LANDING GEAR SAFETY SWITCH
EMER AC BUS
CABIN PRESS. CONT MANUAL
EMER DC BUS
EMER DEPRESS
FWD MAIN AC BUS
CABIN PRESS CONT AUTO
ISOL DC BUS
CABIN PRESS. LOW WARN LT
C5A-1-5-073

Figure 1-27.

ANTI-ICING SYSTEM PANELS

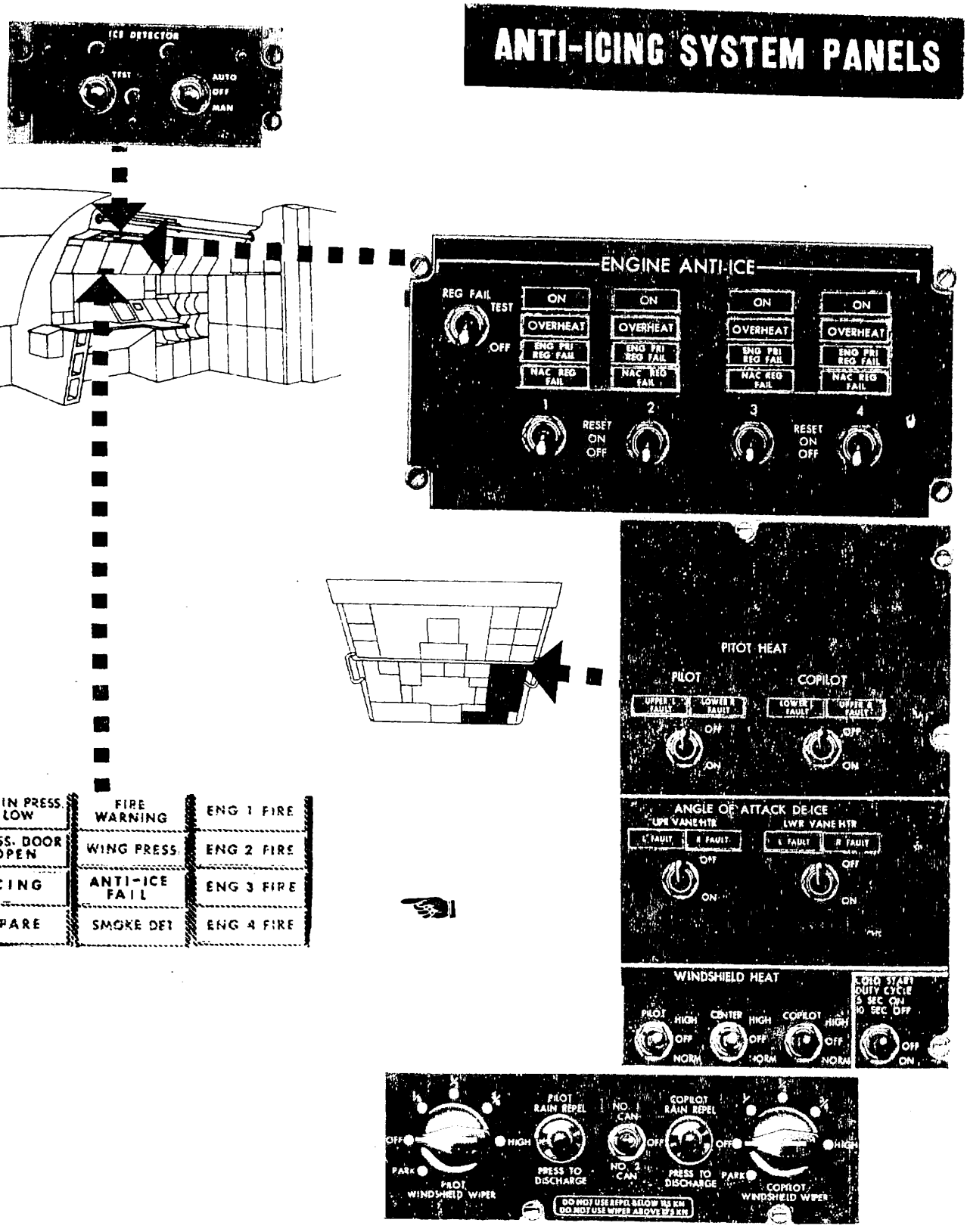

CABIN PRESS. LOW	FIRE WARNING	ENG 1 FIRE
PRESS. DOOR OPEN	WING PRESS.	ENG 2 FIRE
ICING	ANTI-ICE FAIL	ENG 3 FIRE
SPARE	SMOKE DET	ENG 4 FIRE

C5A-1-X4/1-017

Figure 1-28.

ANTI-ICED OR DE-ICED TUBES, PROBES AND VANES-LOCATIONS

NOTE

INDEX NUMBERS 2 THROUGH 4 ARE TYPICAL FOR BOTH SIDES OF AIRCRAFT.

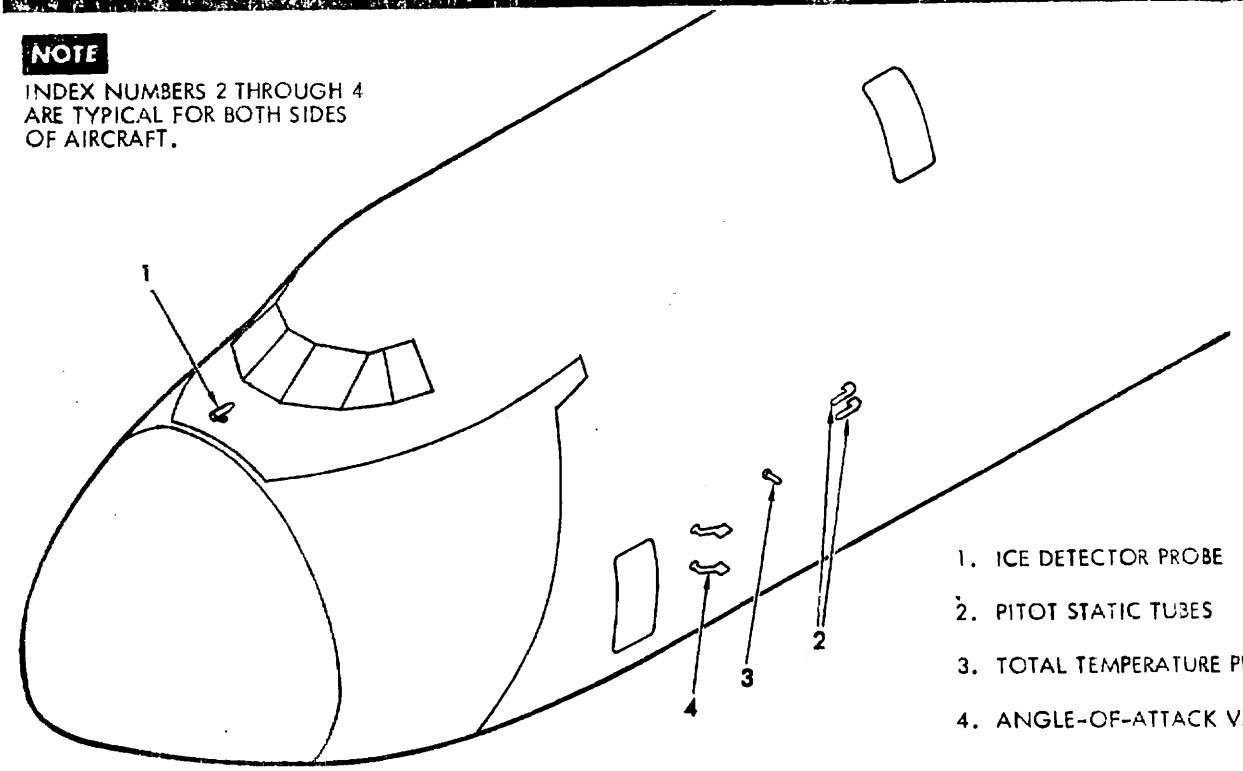

1. ICE DETECTOR PROBE
2. PITOT STATIC TUBES
3. TOTAL TEMPERATURE PROBES
4. ANGLE-OF-ATTACK VANES

C5A-1-9-030

Figure 1-29.

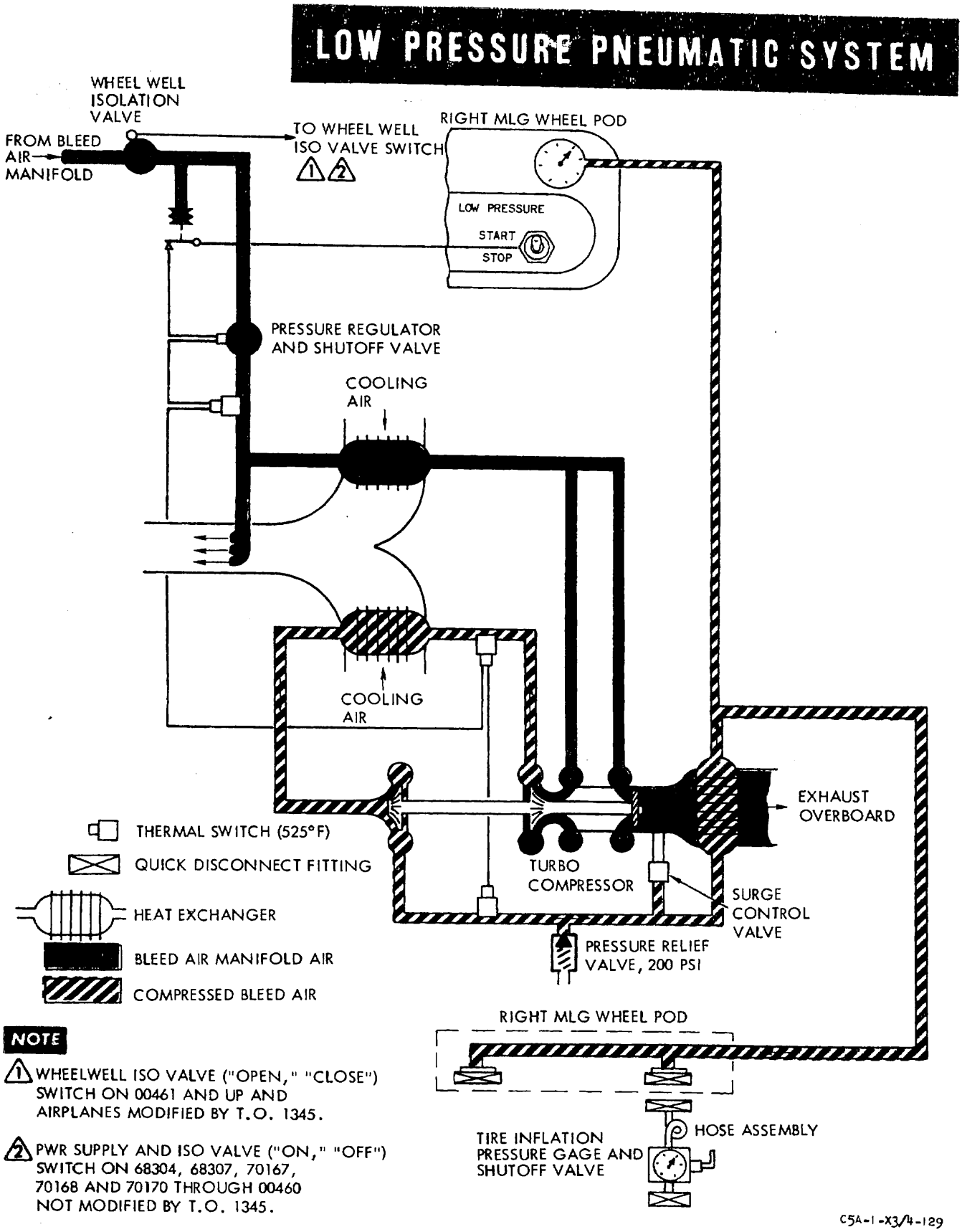

NOTE

1 WHEELWELL ISO VALVE ("OPEN," "CLOSE") SWITCH ON 00461 AND UP AND AIRPLANES MODIFIED BY T.O. 1345.

2 PWR SUPPLY AND ISO VALVE ("ON," "OFF") SWITCH ON 68304, 68307, 70167, 70168 AND 70170 THROUGH 00460 NOT MODIFIED BY T.O. 1345.

Figure 1-30.

HIGH PRESSURE PNEUMATIC SYSTEM

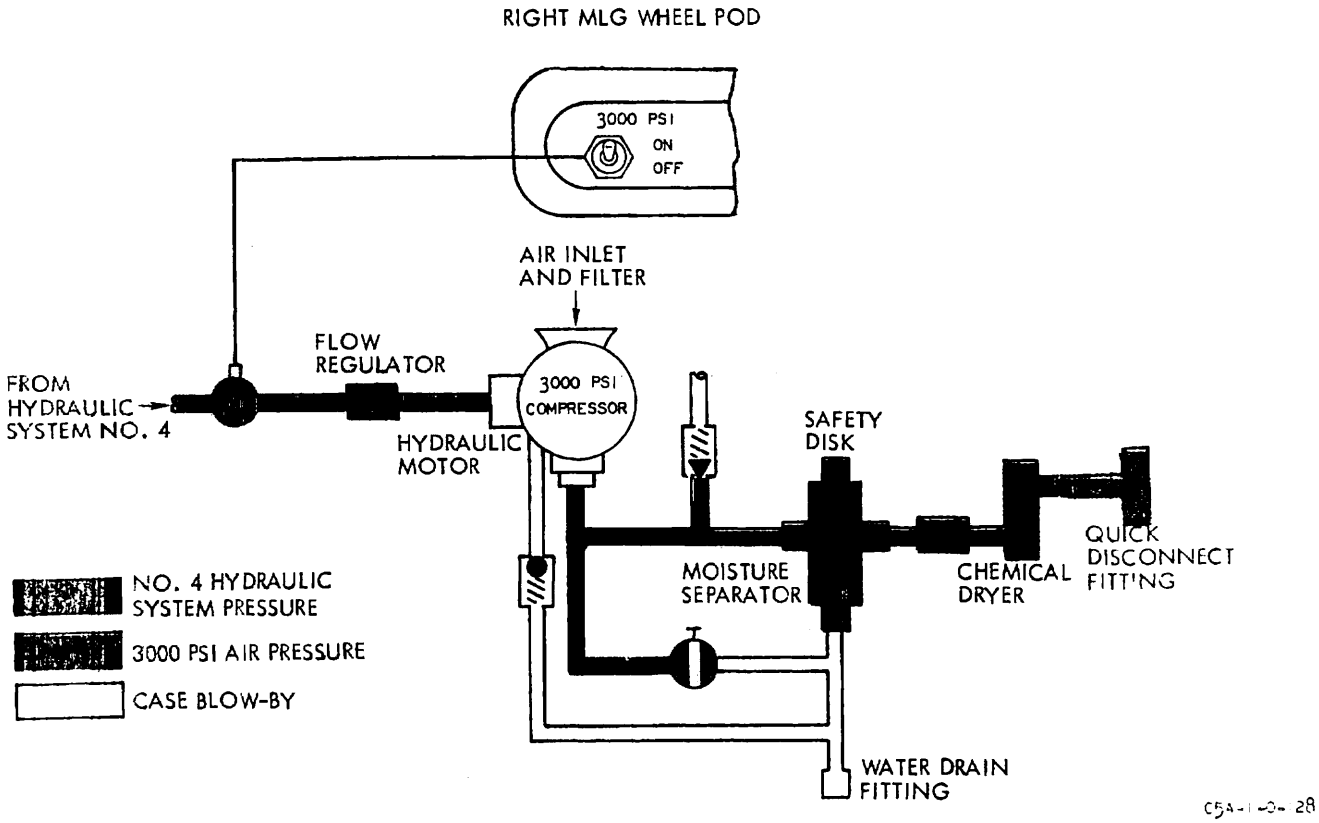

Figure 1-31.

HYDRAULIC SYSTEM COMPONENT LOCATION DIAGRAM

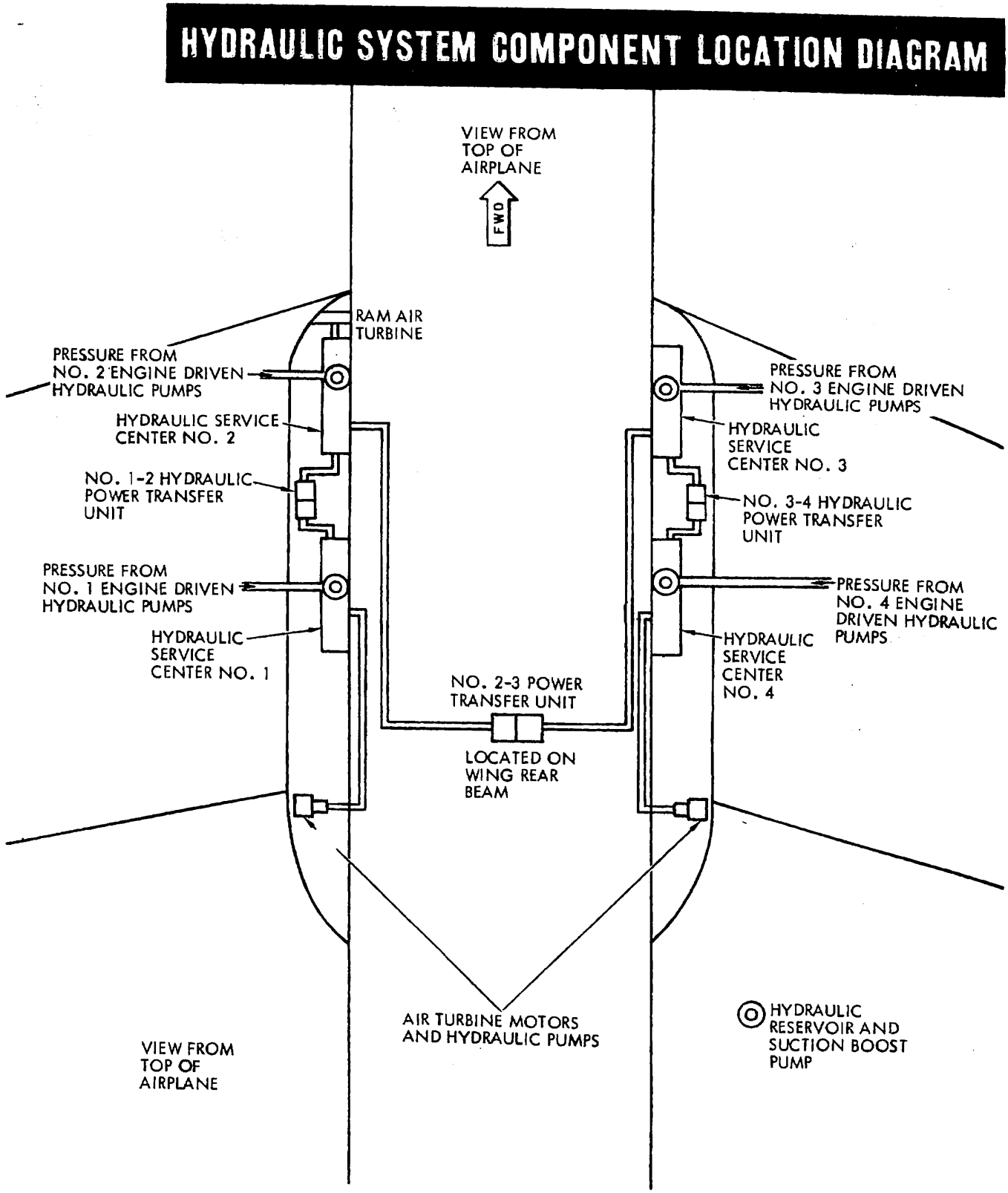

Figure 1-32.

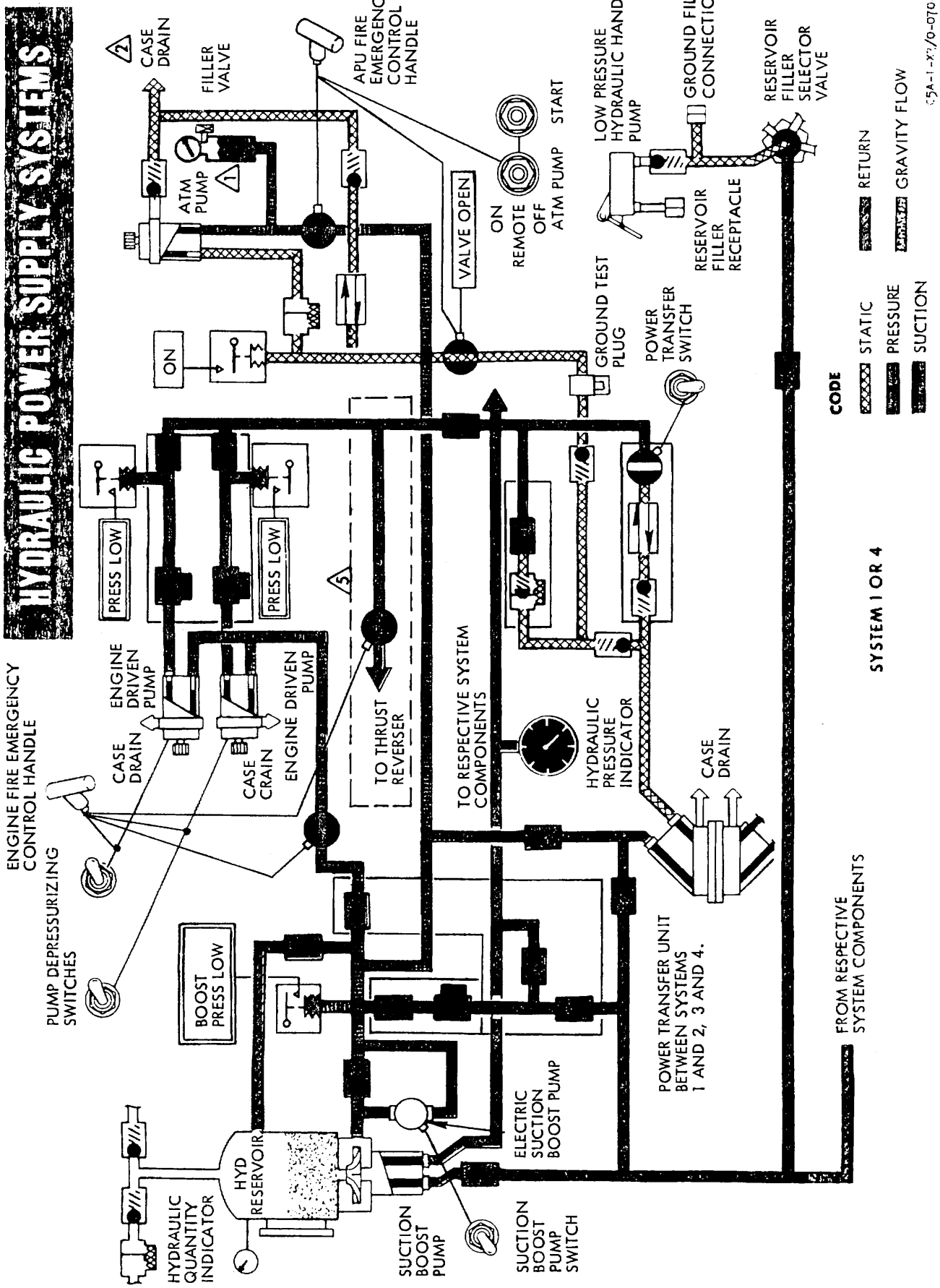

Figure 1-33. (Sheet 1 of 3)

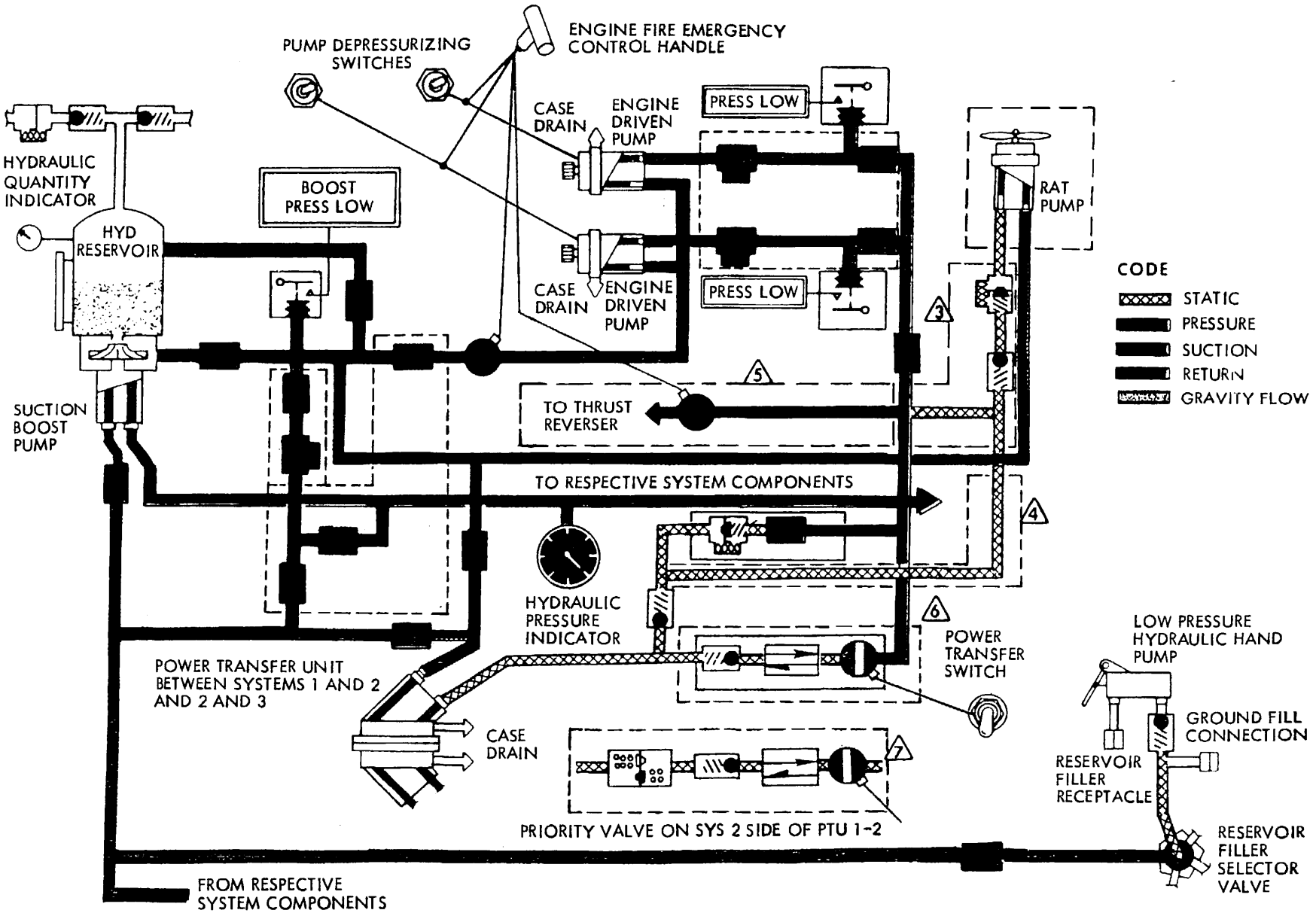

Figure 1-33. (Sheet 2 of 3)

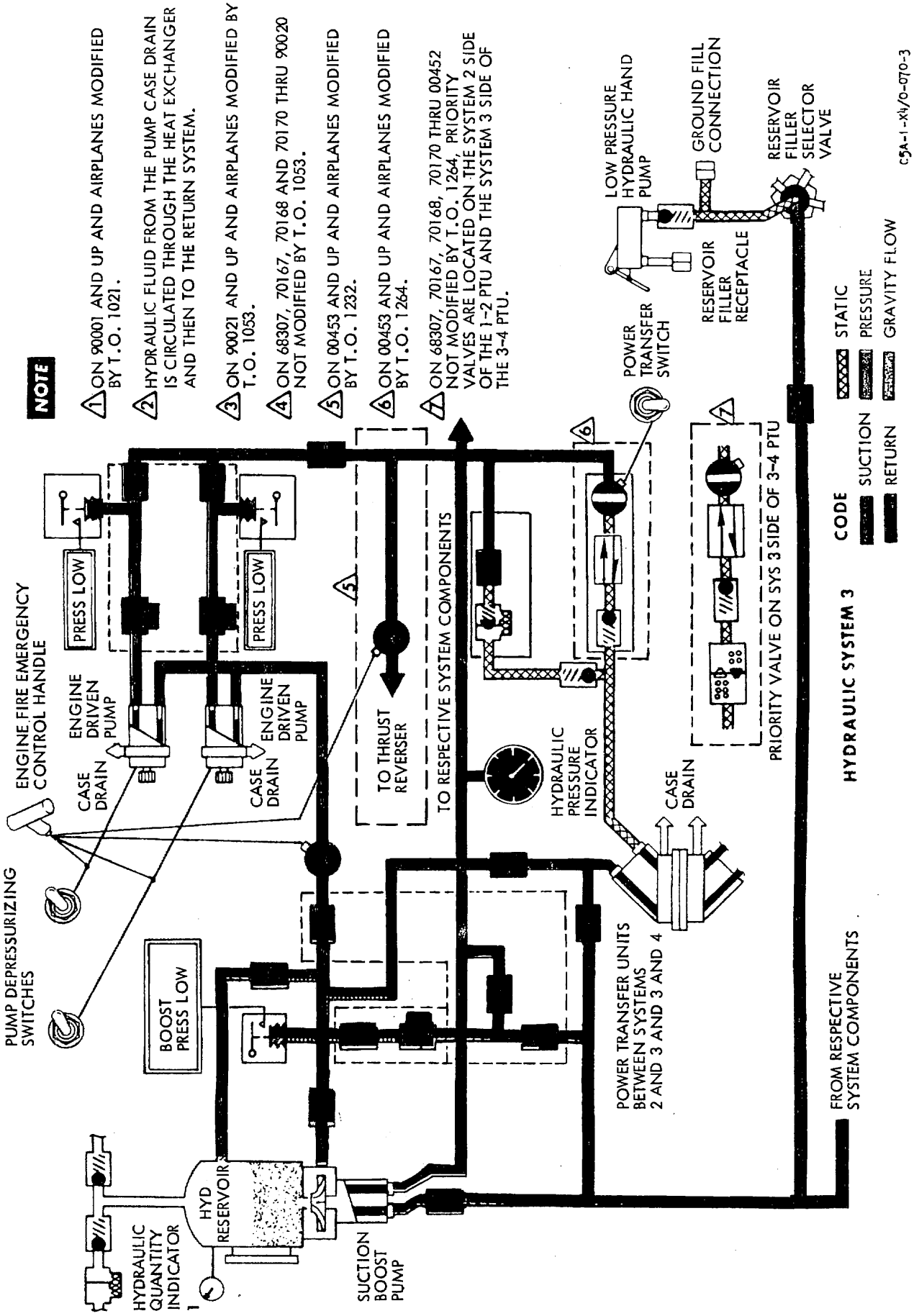

Figure 1-33. (Sheet 3 of 3)

HYDRAULIC POWER DISTRIBUTION

SYSTEM COMPONENTS	HYDRAULIC SYSTEM			
	1	2	3	4
No. 1 Thrust Reverser	X			
No. 2 Thrust Reverser		X		
No. 2 Thrust Reverser Emergency Retract	X			
No. 3 Thrust Reverser			X	
No. 3 Thrust Reverser Emergency Retract				X
No. 4 Thrust Reverser				X
Left APU Start Accumulator	X			
Right APU Start Accumulator				X
NLG Extension and Retraction	X			
NLG Steering	NORM			EMER
NLG Kneeling	X			
Aft MLG Extension and Retraction	X			
Aft MLG Rotation	NORM			ALT
Aft MLG Crosswind Positioning and Control Castering	X			
Fwd MLG Extension and Retraction				X
Fwd MLG Rotation	ALT			NORM
Fwd MLG Crosswind Positioning				X
MLG Brakes	ALT			NORM
Emergency Brake Accumulator				X
Aft MLG & NLG Kneeling	X			
Fwd MLG Kneeling				X
Left Aileron	X	X		
Right Aileron		X		X
LH & RH Flight Spoiler Panel No. 9	X	X		
LH & RH Flight Spoiler Panel No. 8	X		X	
LH & RH Flight Spoiler Panel No. 7		X	X	
LH & RH Flight Spoiler Panel No. 6			X	X
LH & RH Flight Spoiler Panel No. 5		X		X
Inboard Elevators		X	X	
Outboard Elevators	X	X	X	
Alternate Pitch Trim (Screw Actuator)	X			
Normal & Manual Pitch Trim (Nut Actuator)		X		
Variable Feel Unit	X			X

C5A-1-X3/3-184-1

Figure 1-34. (Sheet 1 of 2)

SYSTEM COMPONENTS	HYDRAULIC SYSTEM			
	1	2	3	4
Flap Drive Motor	X			X
Upper Rudder	X		X	
Lower Rudder		X	X	
Left and Right Ground Spoiler Panels	X			X
Emergency Generator		X		
Air Refueling System				X
Aft Cargo Door and Ramp System	X			
Fwd Cargo Door and Ramp System				X
Crew Entrance Door and Ladder				X
Troop Compartment Stair Ladder	X			
High Pressure Pneumatic System (HPPS)				X
Ram Air Turbine		X		

C5A-1-X3/1-184-2

Figure 1-34. (Sheet 2 of 2)

HYDRAULIC SYSTEMS CONTROL AND INDICATOR PANELS

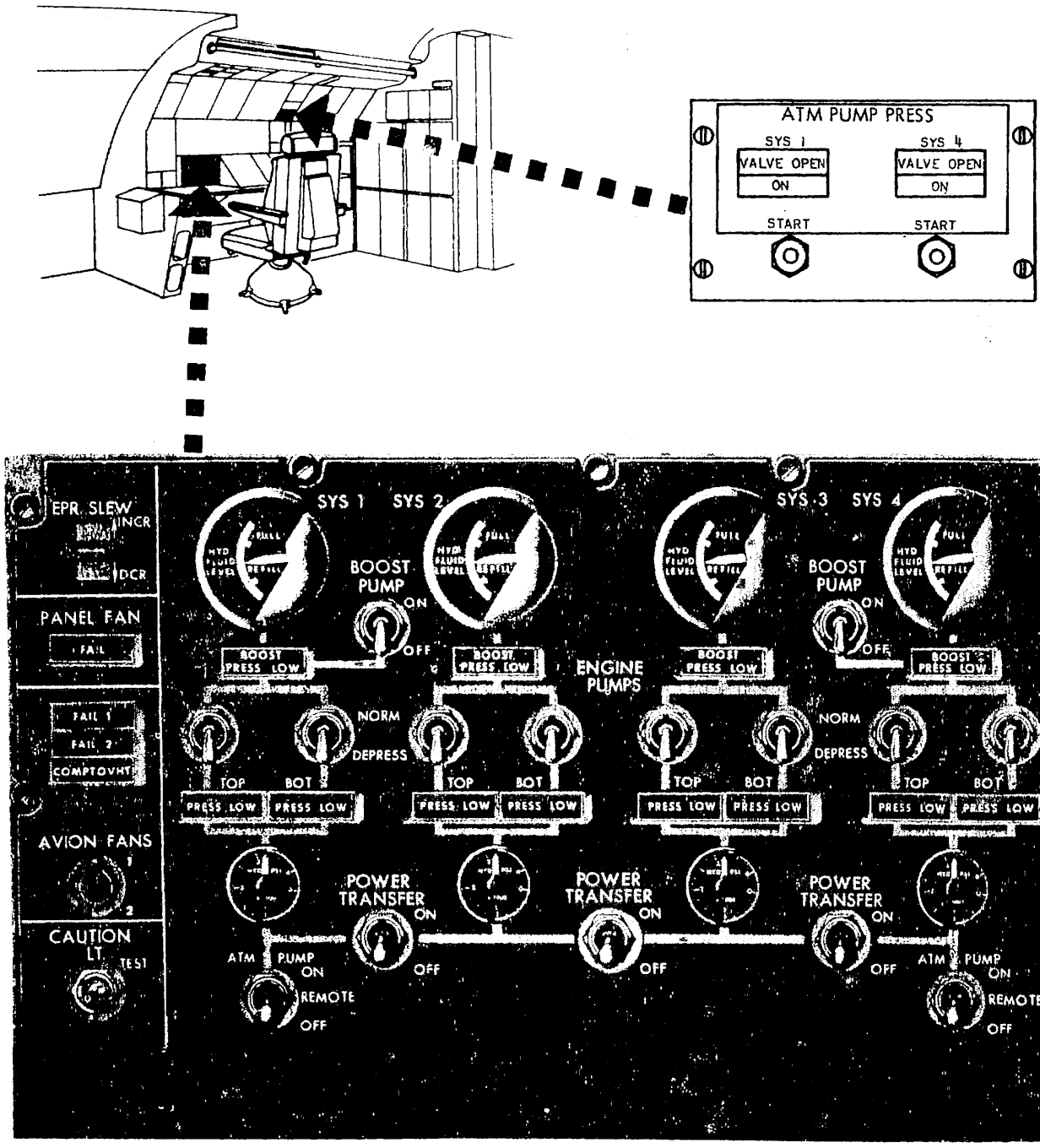

C5A-1-X4/0-028

Figure 1-35.

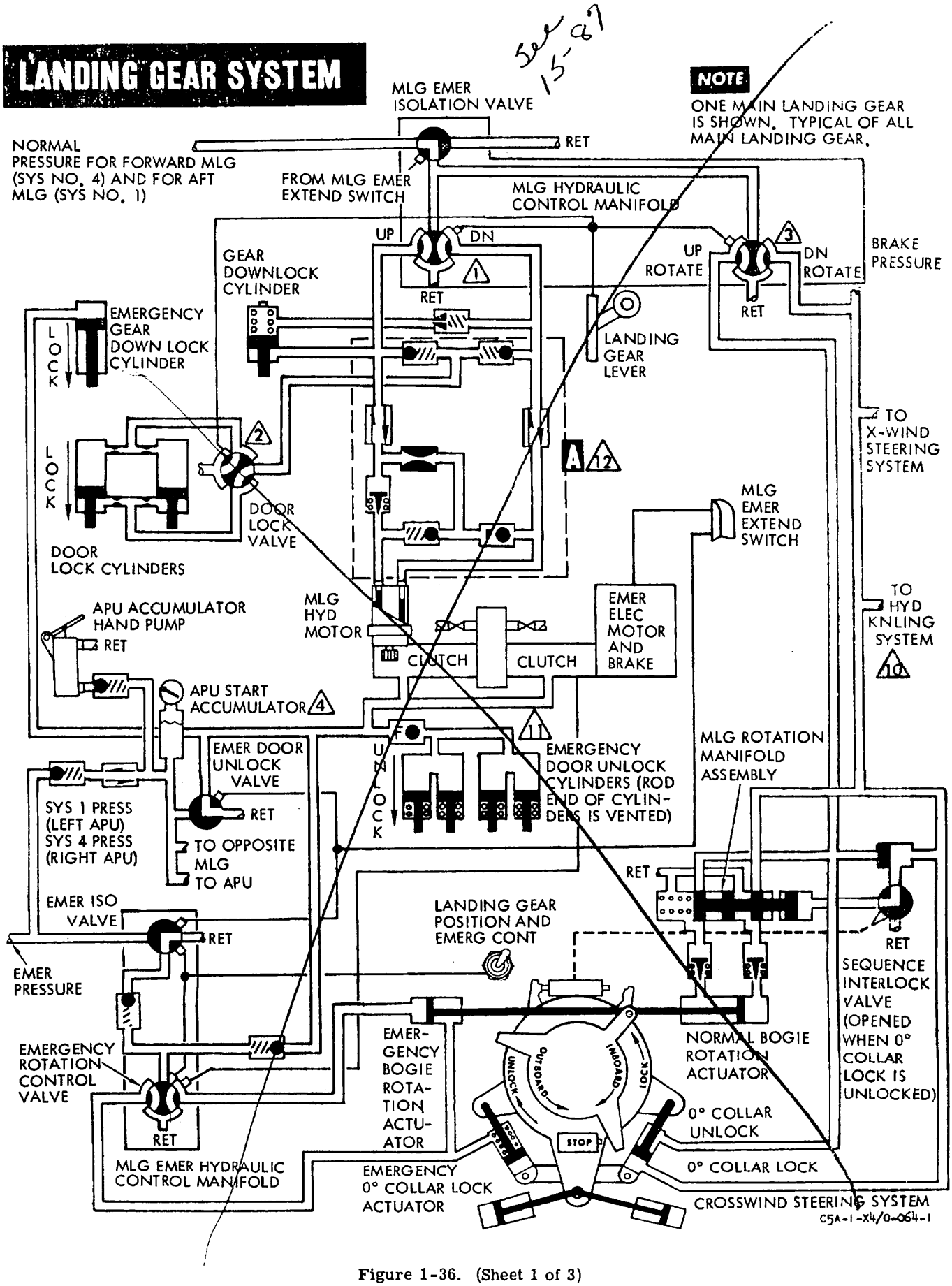

Figure 1-36. (Sheet 1 of 3)

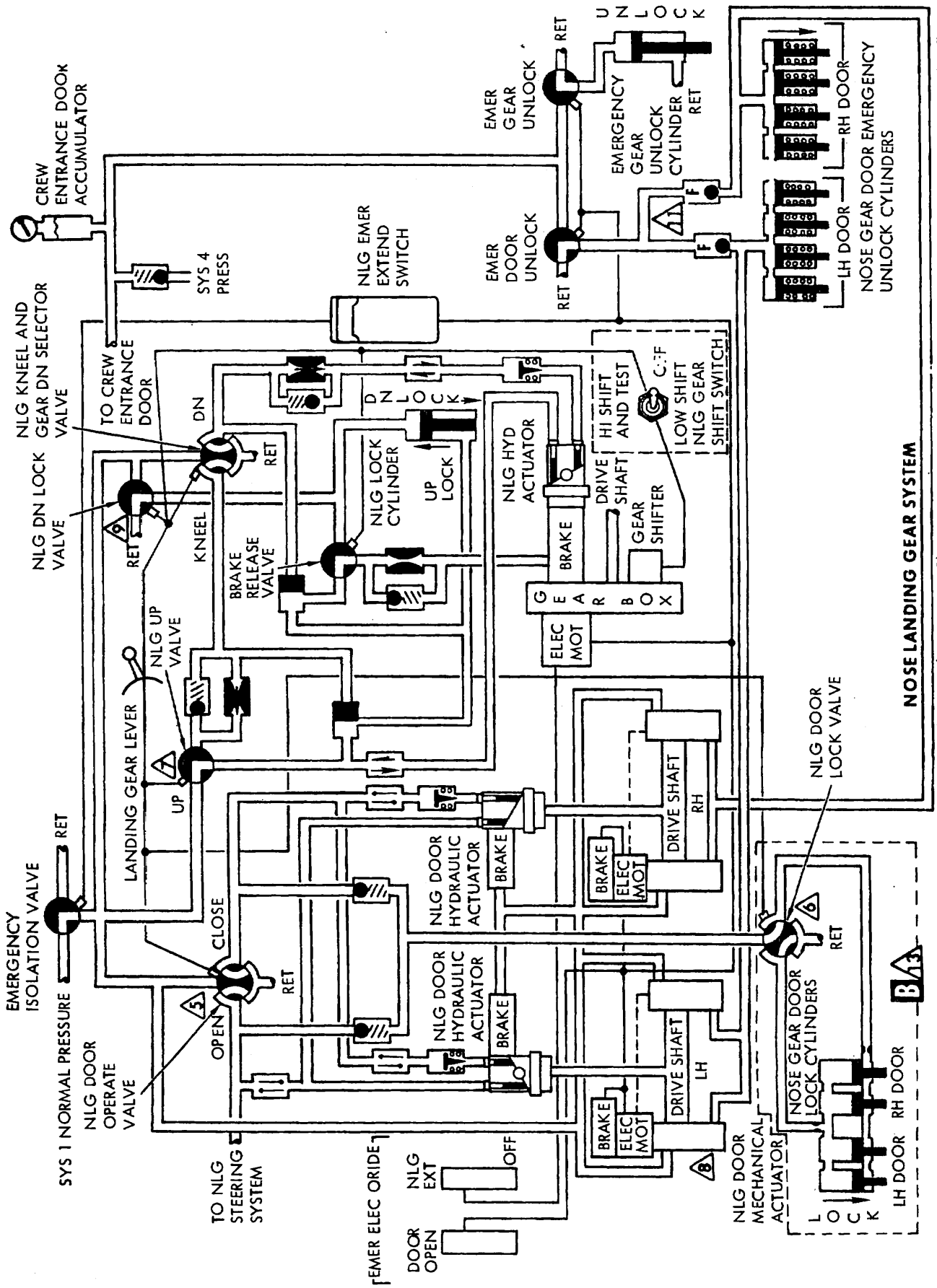

Figure 1-36. (Sheet 2 of 3)

NOTE

1. ON EXTENDED CYCLE, VALVE IS POSITIONED TO PROVIDE DOWN PRESSURE WHEN LANDING GEAR LEVER IS PLACED TO DN. ON RETRACT CYCLE, VALVE IS POSITIONED TO PROVIDE UP PRESSURE WHEN GEAR IS UP AND BOGIE IS ROTATED 90° INBOARD.

2. ON EXTEND CYCLE, VALVE DEENERGIZES TO PROVIDE UNLOCK PRESSURE WHEN GEAR LEVER IS PLACED DN. ON RETRACT CYCLE, VALVE IS ENERGIZED TO PROVIDE LOCK PRESSURE WHEN DOOR CLOSES. VALVE REMAINS ENERGIZED WHILE GEAR IS UP AND DOOR IS CLOSED.

3. ON EXTEND CYCLE, VALVE OPENS TO PROVIDE INBOARD (GEAR UP) ROTATE PRESSURE WHEN THE GEAR LEVER IS PLACED DN. WHEN SIDEBRACE IS LOCKED, VALVE IS DETENTED OPEN TO PROVIDE OUTBOARD (GEAR DOWN) ROTATE PRESSURE. ON RETRACT CYCLE, VALVE OPENS TO PROVIDE INBOARD (GEAR UP) ROTATE PRESSURE WHEN GEAR LEVER IS PLACED UP.

4. THE LEFT APU START ACCUMULATOR PROVIDES EMERGENCY PRESSURE FOR THE FWD MLG DOOR UNLOCK, GEAR DOWNLOCK, CLUTCHES, EMERGENCY 0° COLLAR LOCK AND EMERGENCY BOGIE ROTATION. THE RIGHT APU ACCUMULATOR PROVIDES EMERGENCY PRESSURE FOR THE AFT MLG, DOOR UNLOCK, GEAR DOWN LOCK, CLUTCHES, EMERGENCY 0° COLLAR LOCK AND EMERGENCY BOGIE ROTATION.

5. ON EXTEND CYCLE, VALVE OPENS TO PROVIDE DOOR UNLOCK AND DOOR OPEN PRESSURE WHEN GEAR LEVER IS PLACED DOWN (VALVE DETENTED TO OPEN). ON RETRACT CYCLE, VALVE OPENS TO PROVIDE DOOR CLOSE PRESSURE WHEN NOSE GEAR UPLOCK IS LOCKED UP AND DOOR LOCK PRESSURE WHEN BOTH DOORS ARE CLOSED.

6. ON EXTEND CYCLE, VALVE IS DEENERGIZED TO PROVIDE UNLOCK PRESSURE WHEN GEAR LEVER IS PLACED DOWN. ON RETRACT CYCLE, VALVE IS ENERGIZED TO PROVIDE LOCK PRESSURE WHEN NLG DOORS ARE CLOSED. VALVE REMAINS ENERGIZED WHILE GEAR LEVER IS UP AND DOORS ARE CLOSED.

7. ON RETRACT CYCLE, VALVE OPENS TO PROVIDE RETRACT PRESSURE WHEN GEAR LEVER IS PLACED UP AND GEAR DRIVE BOX HAS SHIFTED TO LOW TORQUE, HIGH SPEED.

8. NLG DOOR MECHANICAL ACTUATOR IS SUPPLIED NORMAL PRESSURE TO KEEP ACTUATOR ENGAGED TO NLG DOOR HYDRAULIC ACTUATOR DRIVE SHAFT. EMERGENCY PRESSURE IS SUPPLIED TO DISENGAGE ACTUATOR FROM NLG DOOR HYDRAULIC ACTUATOR DRIVE SHAFT AND ENGAGE IT TO ELECTRICAL MOTOR.

9. ON EXTEND CYCLE, VALVE IS ENERGIZED TO PROVIDE DOWNLOCK PRESSURE WHEN NLG DOORS ARE OPEN. VALVE REMAINS ENERGIZED WHILE GEAR LEVER IS DOWN, EXCEPT DURING KNEELING. ON RETRACT CYCLE, VALVE IS DEENERGIZED TO RETURN WHEN GEAR LEVER IS PLACED UP.

10. ON 00451 AND UP AND AIRPLANES MODIFIED BY T.O. 1345.

11. HYDRAULIC FUSES ADDED ON 90027 AND UP AND AIRPLANES MODIFIED BY T.O. 1217.

12. ON 00454 AND UP AND AIRPLANES MODIFIED BY T.O. 1271.

13. ON 68307, 70167, 70168, AND 70170 THRU 00453 NOT MODIFIED BY T.O. 1271.

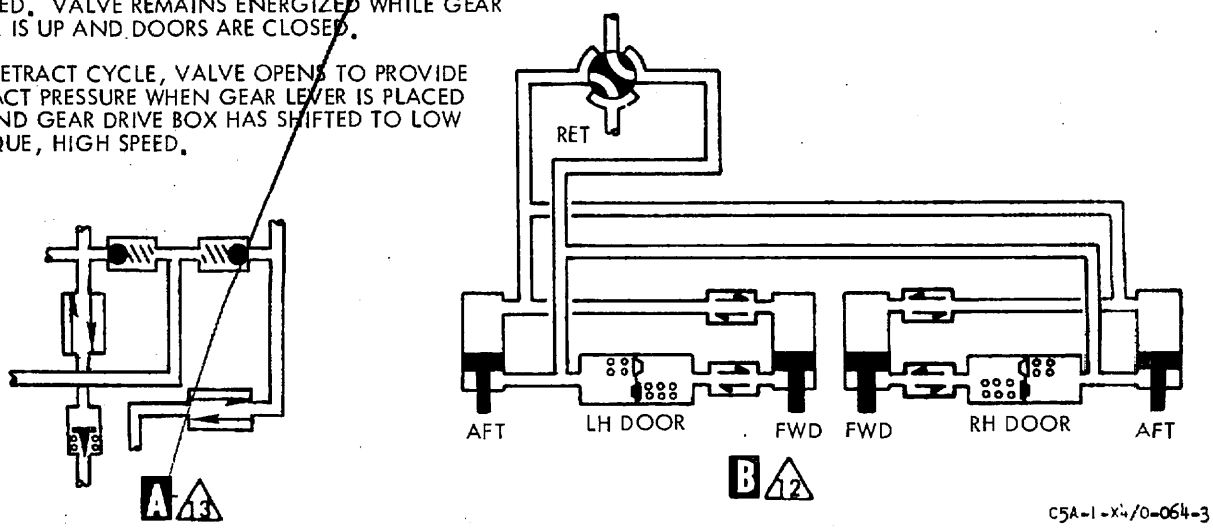

Figure 1-36. (Sheet 3 of 3)

LANDING GEAR SYSTEM CONTROLS AND INDICATORS

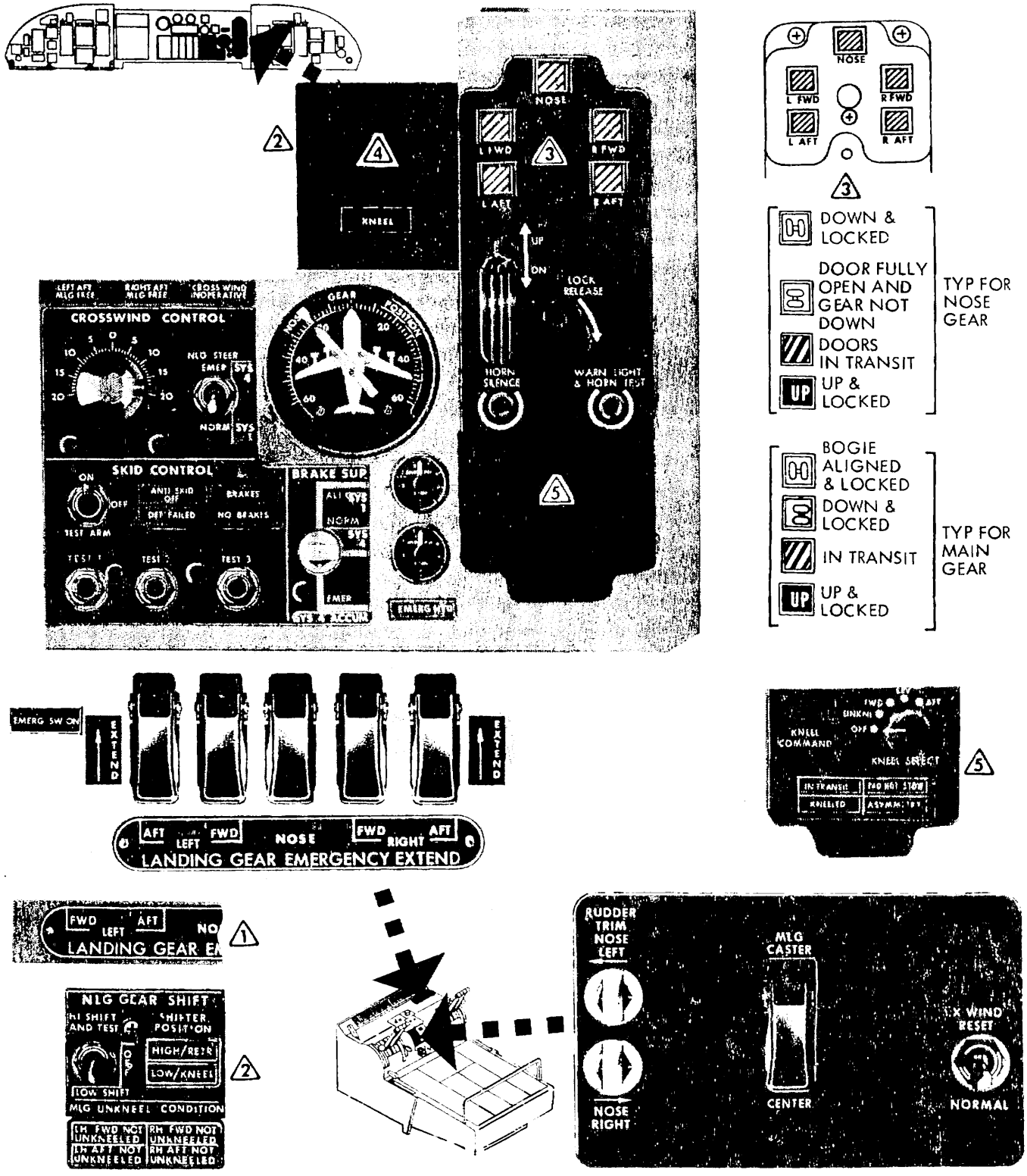

C5A-1-X4/0-095-1

Figure 1-37. (Sheet 1 of 6)

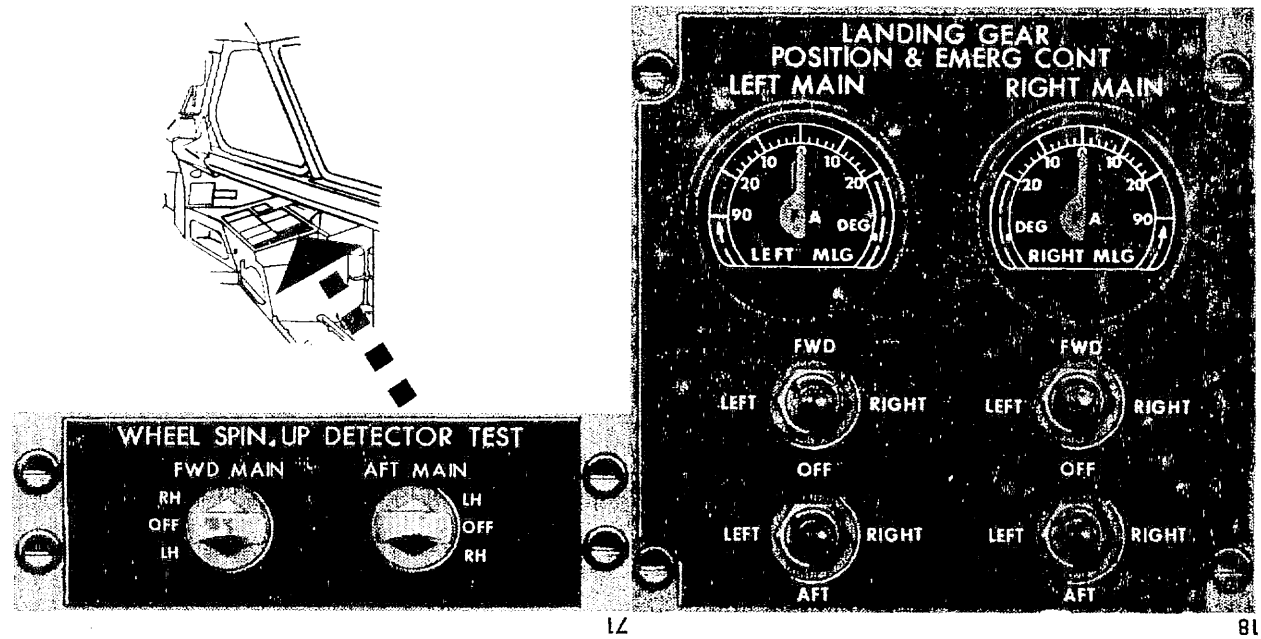

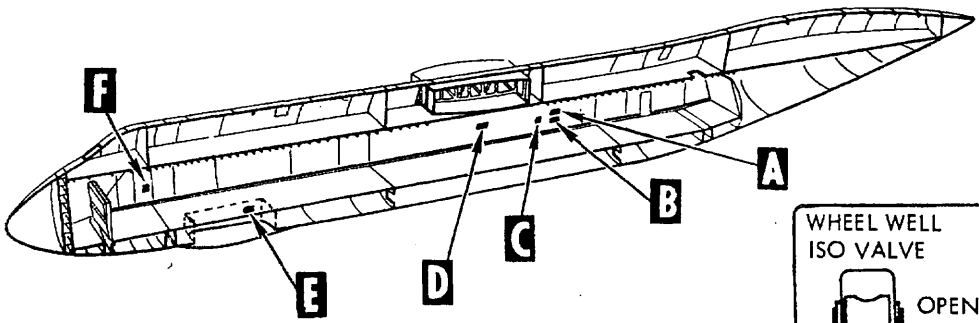

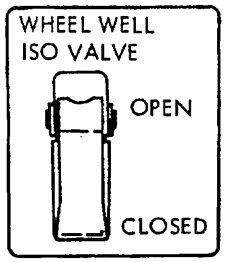

B 4
FUS STA 1480 RH SIDE

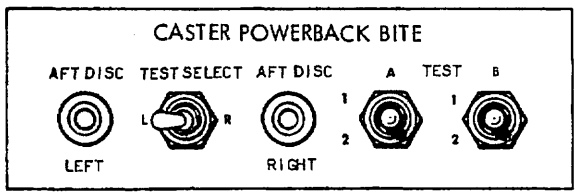

A
FUS STA 1480 RH SIDE

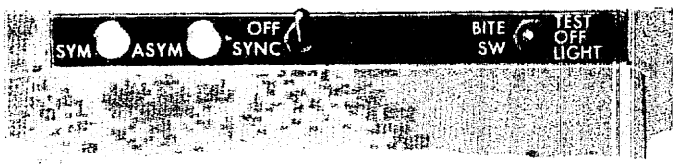

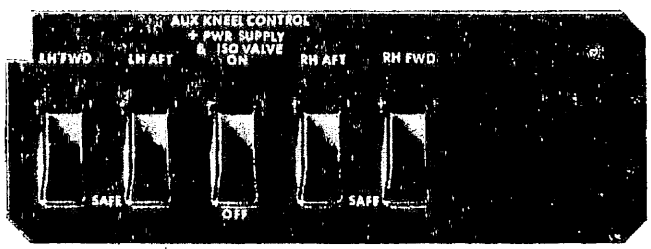

B 2
FUS STA 1480 RH SIDE

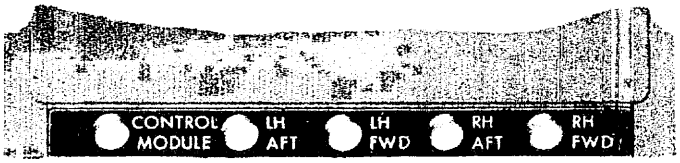

C 2
FUS STA 1465 RH SIDE
KNEELING CONTROL MODULE

C5A-1-X4/0-095-2

Figure 1-37. (Sheet 2 of 6)

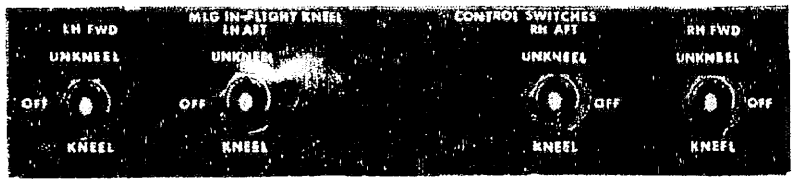

D 2

FUS STA 1220 RH SIDE

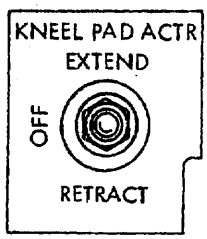

E 6

FUS STA 665 AFT RH SIDE
NOSE WHEEL WELL

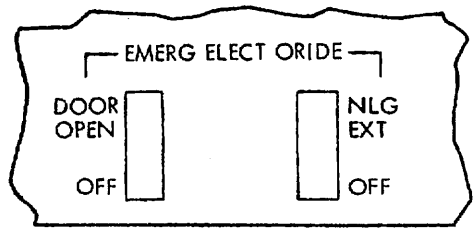

F

FUS STA 574 FWD
RH SIDE CARGO COMPT.

NOTE

1. ON 68307, 70167 AND 70168.
2. ON 68304, 68307, 70167, 70168, AND 70170 THROUGH 00460 NOT MODIFIED BY T.O. 1345.
3. ON 68305, 70168, 00445 AND UP AND AIRPLANES MODIFIED BY T.O. 1319.
4. ON 00461 AND UP AND AIRPLANES MODIFIED BY T.O. 1345.
5. REMOVED ON 00461 AND UP AND AIRPLANES MODIFIED BY T.O. 1345.
6. ON 00445 AND UP AND AIRPLANES MODIFIED BY T.O. 1285.

C5A-1-X4/0-095-3

Figure 1-37. (Sheet 3 of 6)

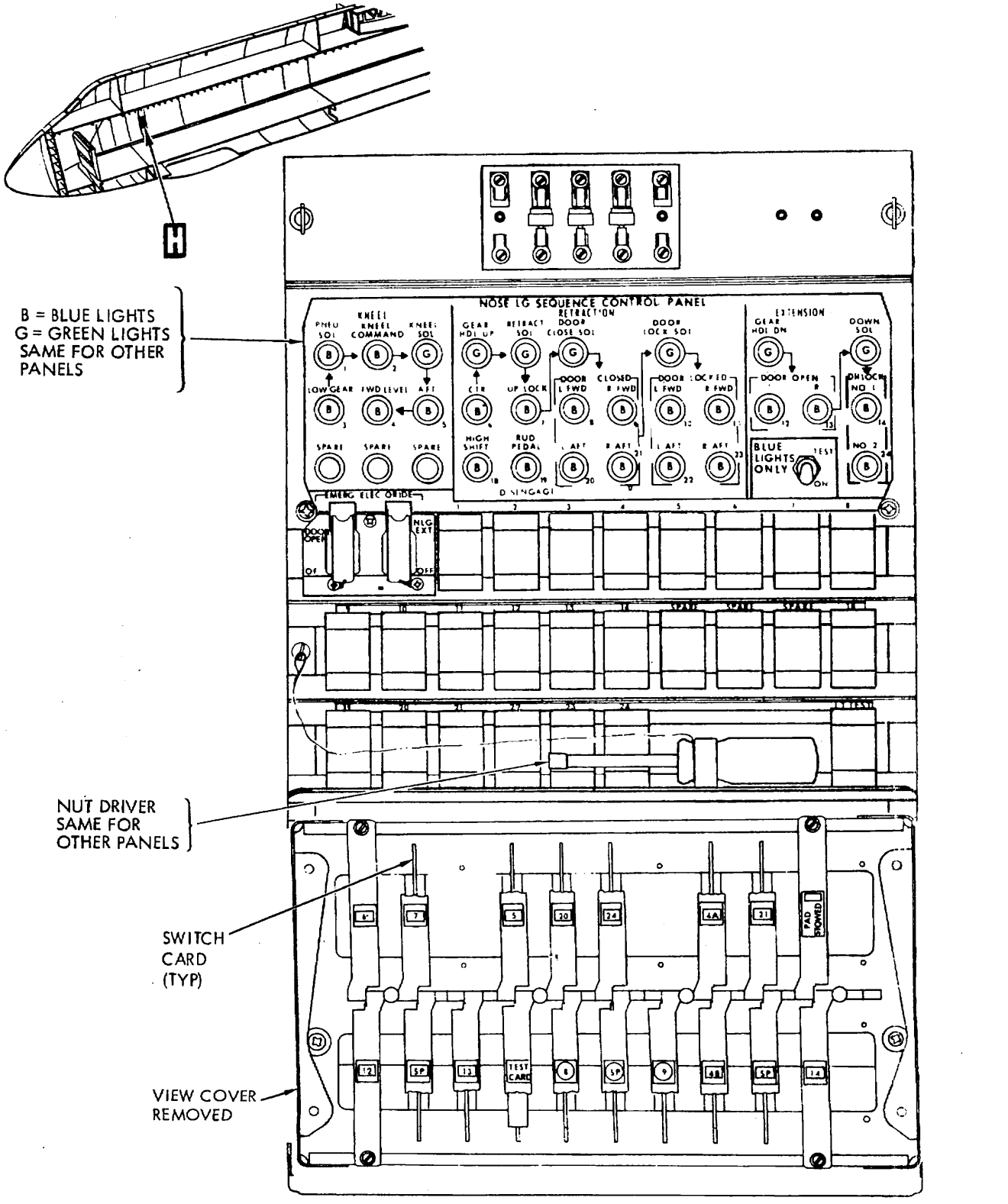

NLG SEQUENCE CONTROL PANEL

C5A-1-x4/0-095-4

Figure 1-37. (Sheet 4 of 6)

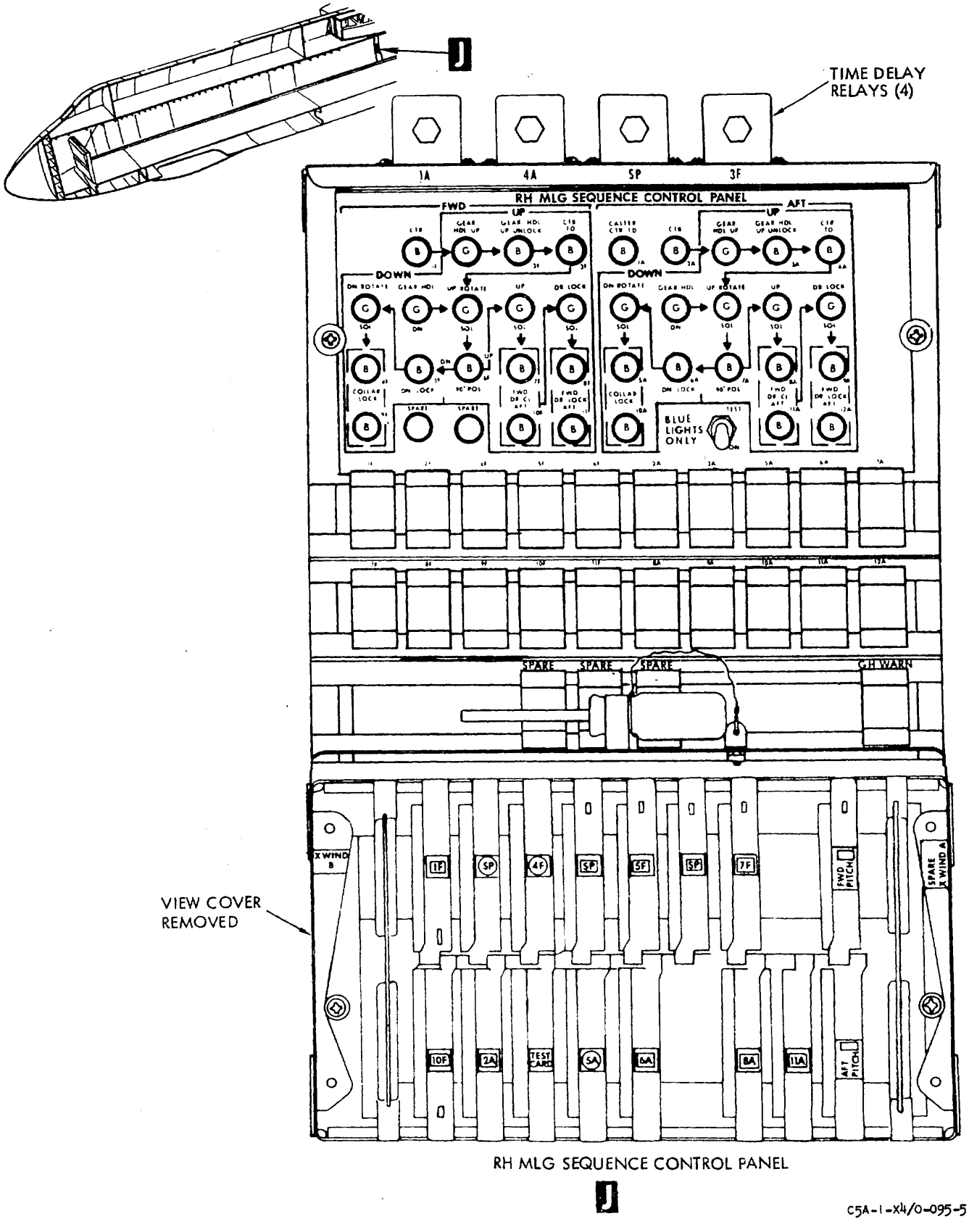

Figure 1-37. (Sheet 5 of 6)

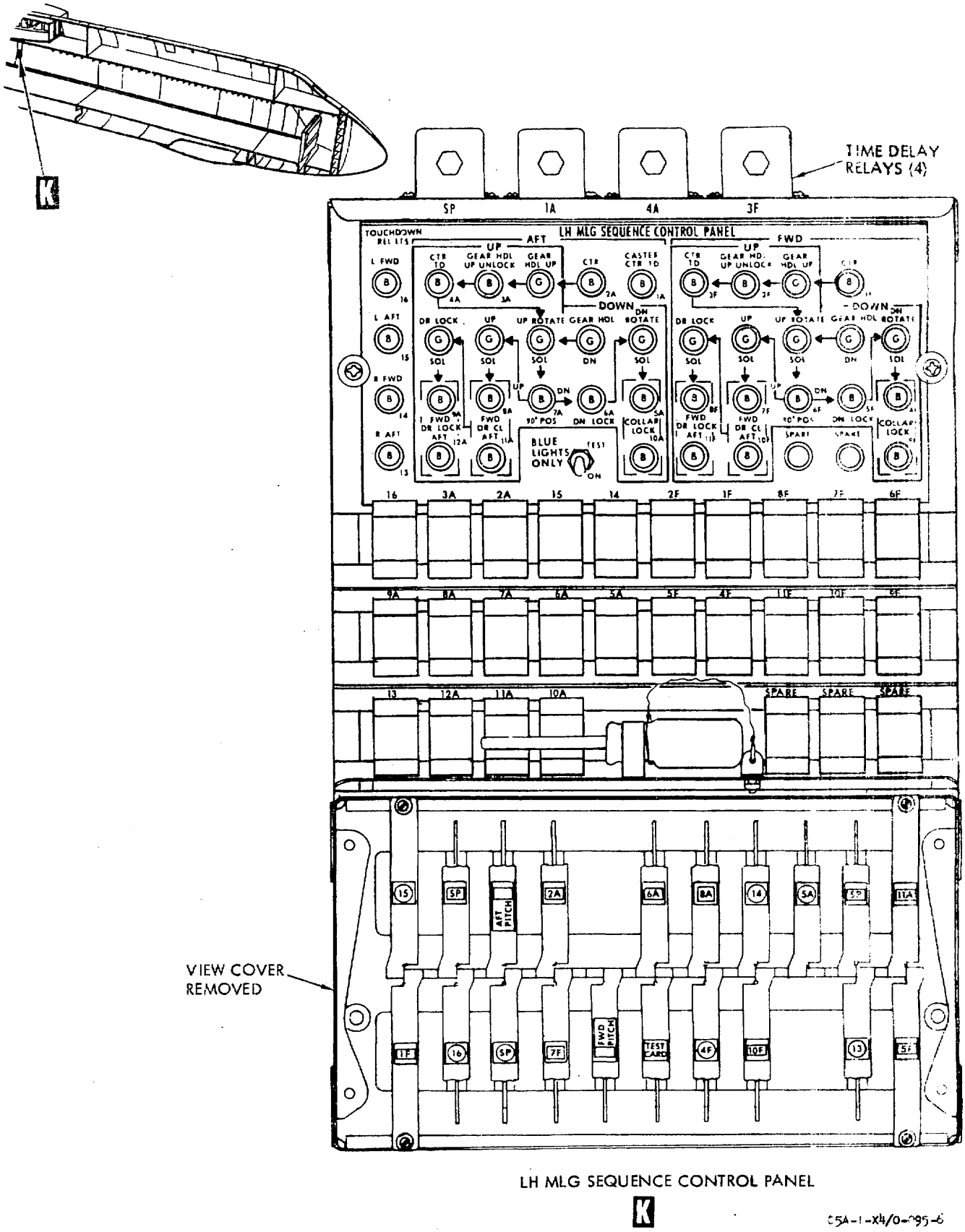

Figure 1-37. (Sheet 6 of 6)

KNEELING PAD POSITIONS

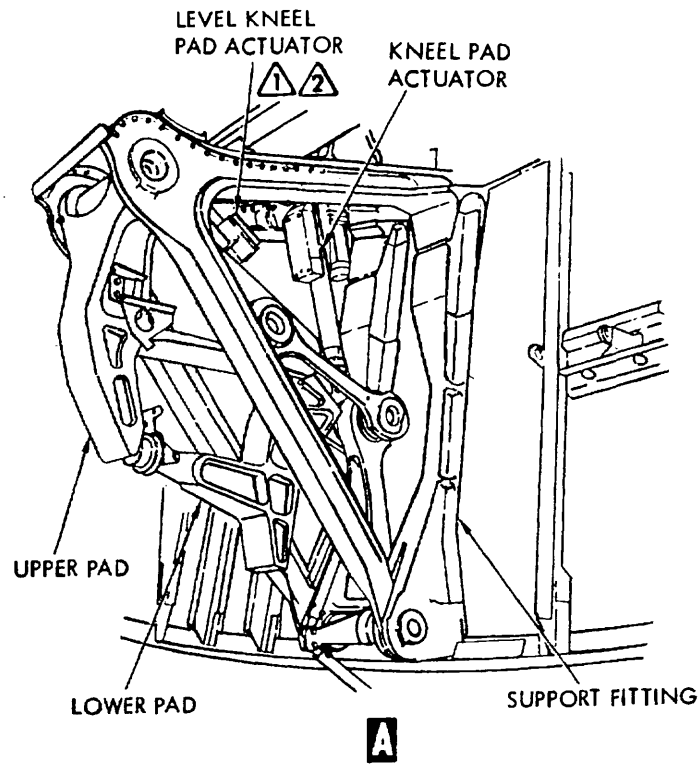

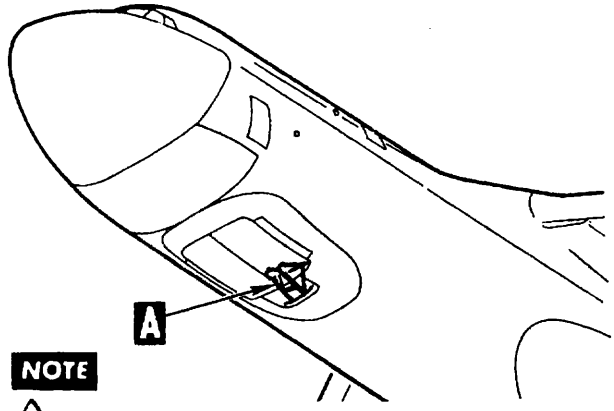

NOTE

1. ELECTRICALLY-DRIVEN LEVEL KNEEL PAD ACTUATOR ON 68304, 68307, 70167, 70168 AND 70170 THROUGH 90027 NOT MODIFIED BY T.O. 1285.
2. MANUALLY POSITIONED LEVEL KNEEL PAD STRUT ON 00445 AND UP AND AIRPLANES MODIFIED BY T.O. 1285.

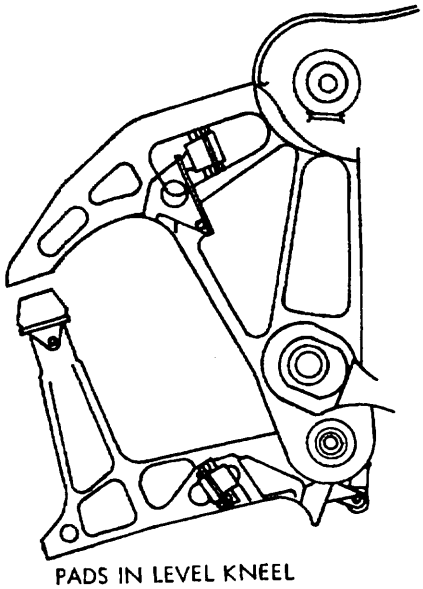

PADS IN LEVEL KNEEL POSITION

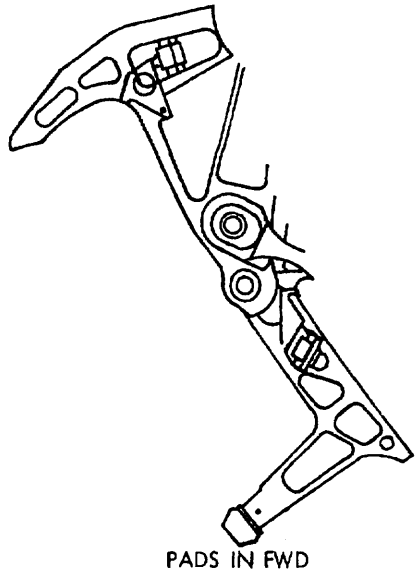

PADS IN FWD KNEEL POSITION

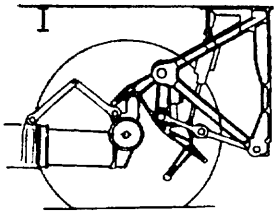

NLG FWD KNEELED

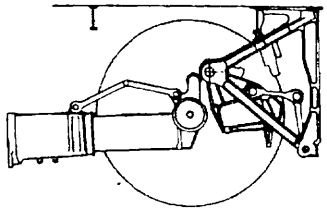

NLG RETRACTED-KNEELING PADS STOWED

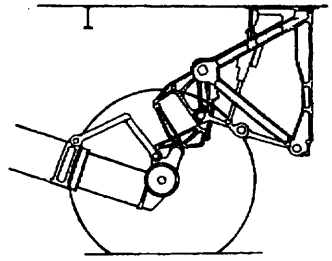

NLG LEVEL KNEELED

C5A-1-X4/0-192

Figure 1-38.

LANDING GEAR STEERING AND CROSSWIND POSITIONING SYSTEMS

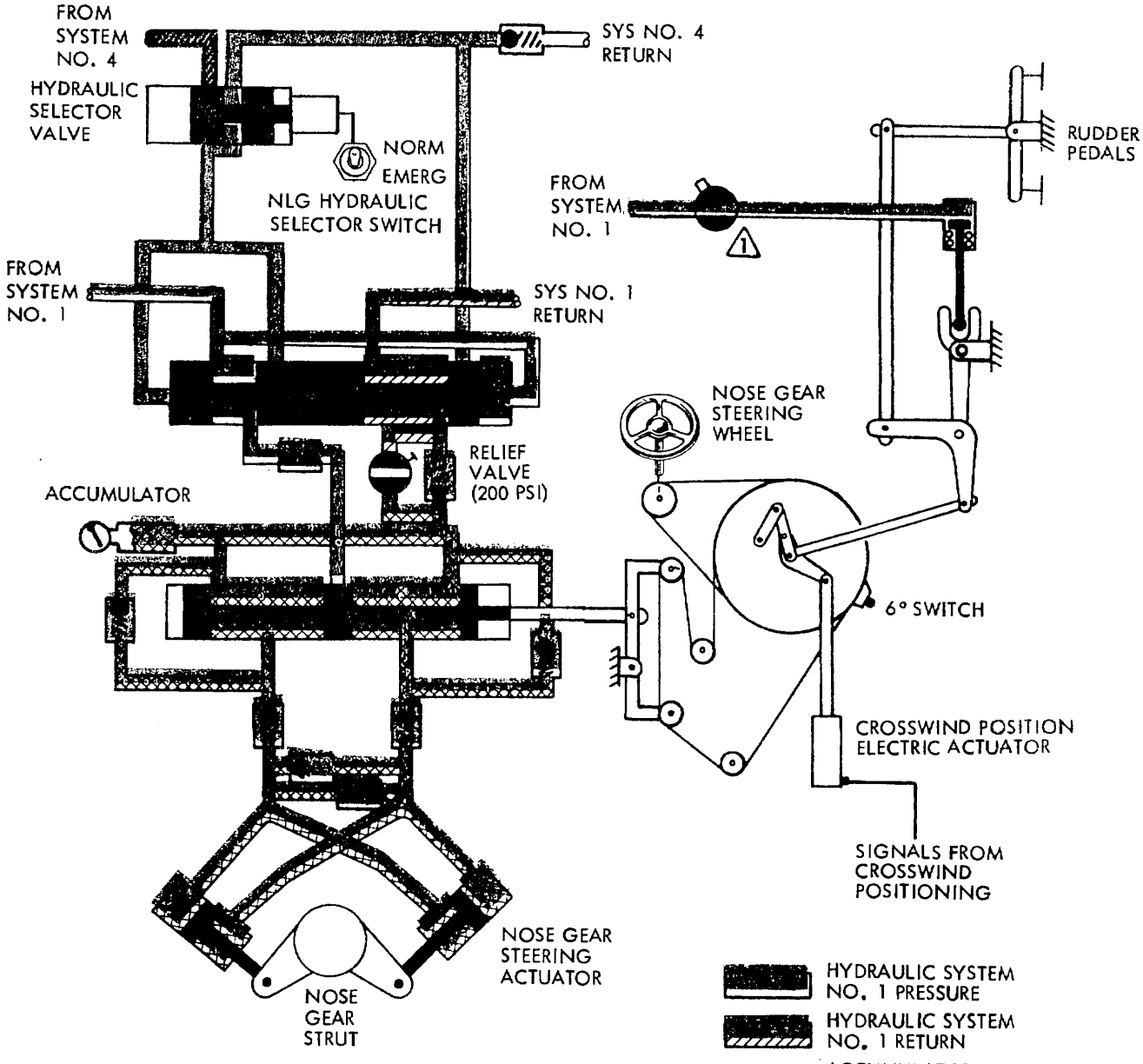

NOTE

1 VALVE OPENS TO PROVIDE PRESSURE TO ENGAGE RUDDER PEDAL STEERING WHEN STEERING WHEEL IS LESS THAN 1/2° OFF CENTER, GEAR LEVER IS DN, NOSE GEAR DOWNLOCK IS LOCKED, AND RUDDER PEDALS ARE COMMANDING LESS THAN 6° NWS.

NLG STEERING SYSTEM

C5A-1-x4/5-066-1

Figure 1-39. (Sheet 1 of 2)

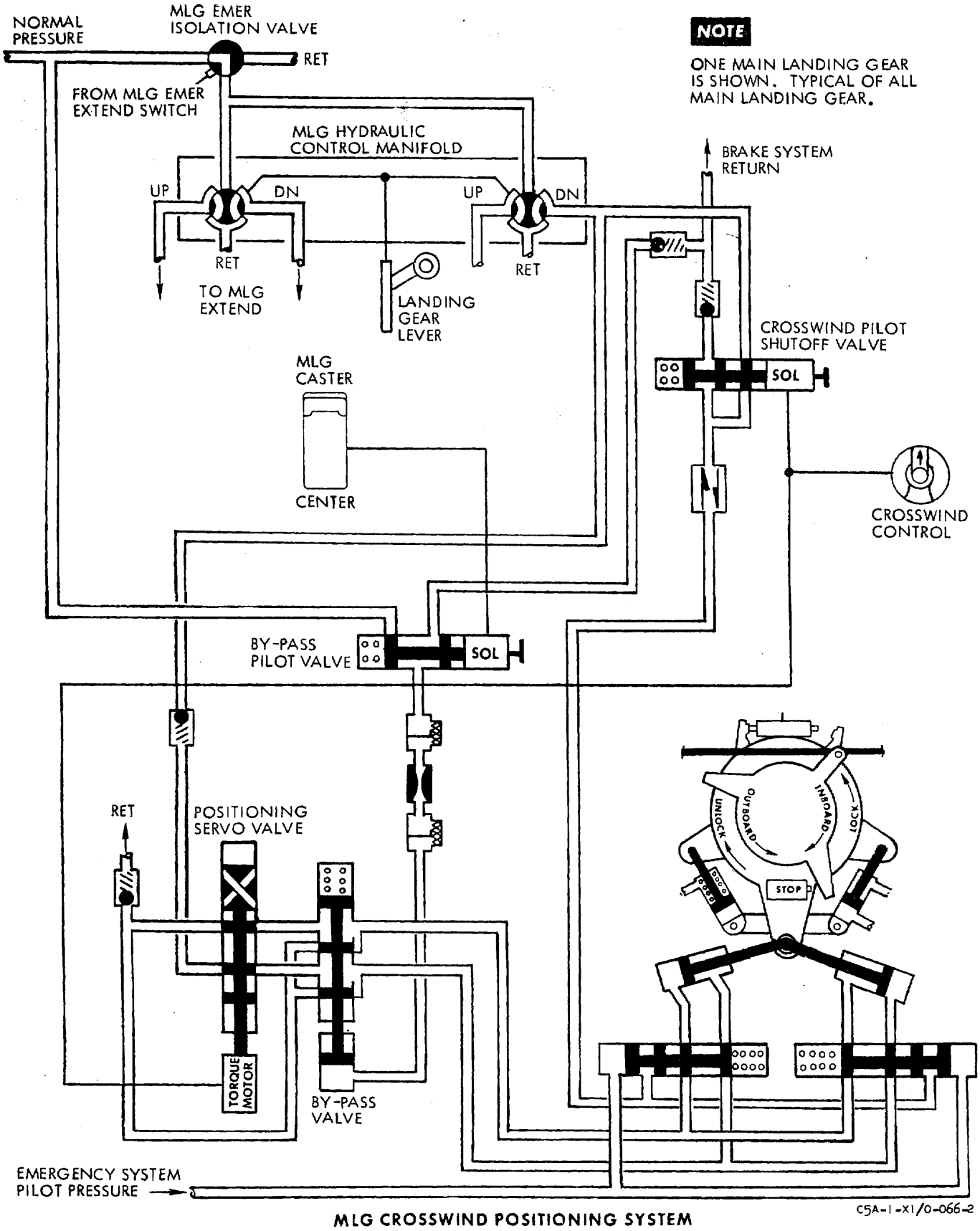

Figure 1-39. (Sheet 2 of 2)

LANDING GEAR HYDRAULIC KNEELING SYSTEM CONTROLS AND INDICATORS

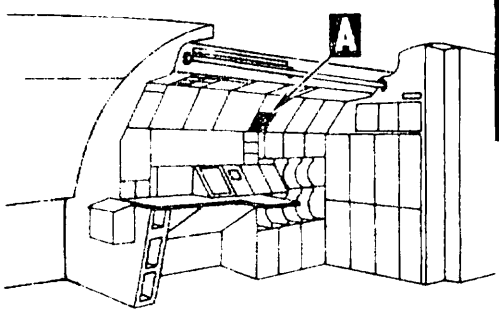

NOTE

ON 00461 AND UP AND AIRPLANES MODIFIED BY T.O. 1345.

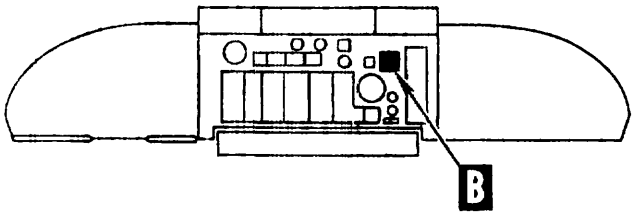

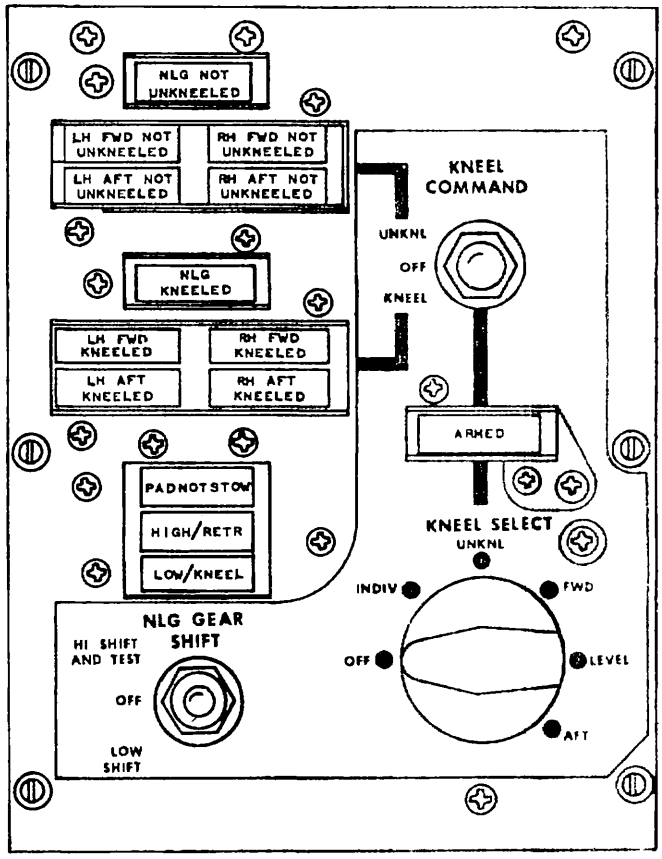

A

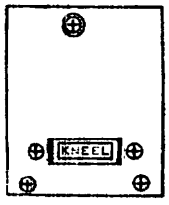

B

C5A-1-X3/1-198-1

Figure 1-40. (Sheet 1 of 2)

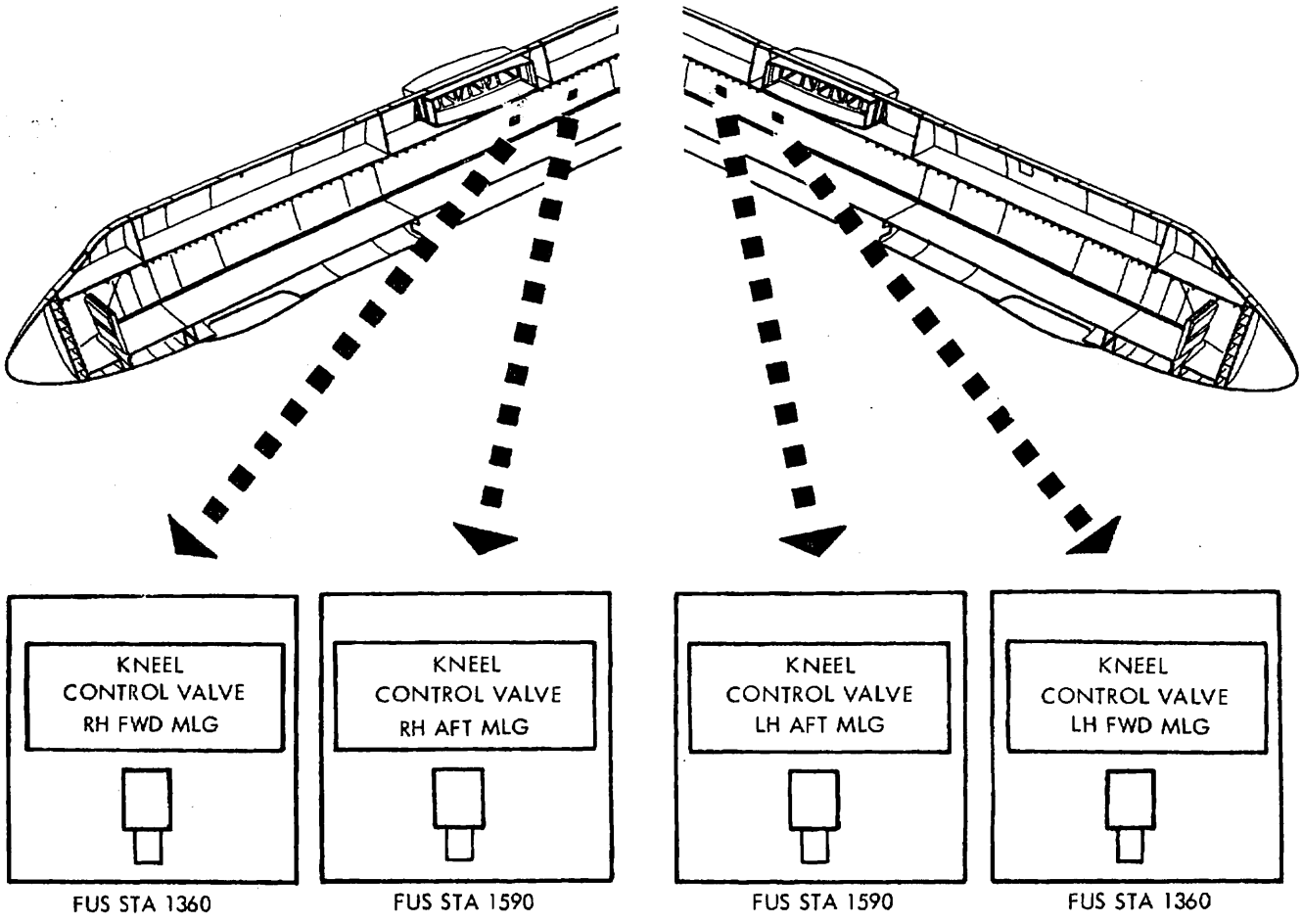

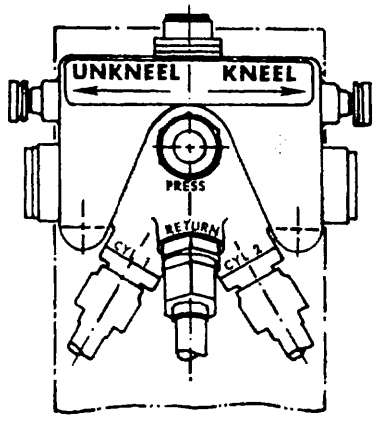

KNEEL CONTROL VALVE

C5A-1-X3/1-198-2

Figure 1-40. (Sheet 2 of 2)

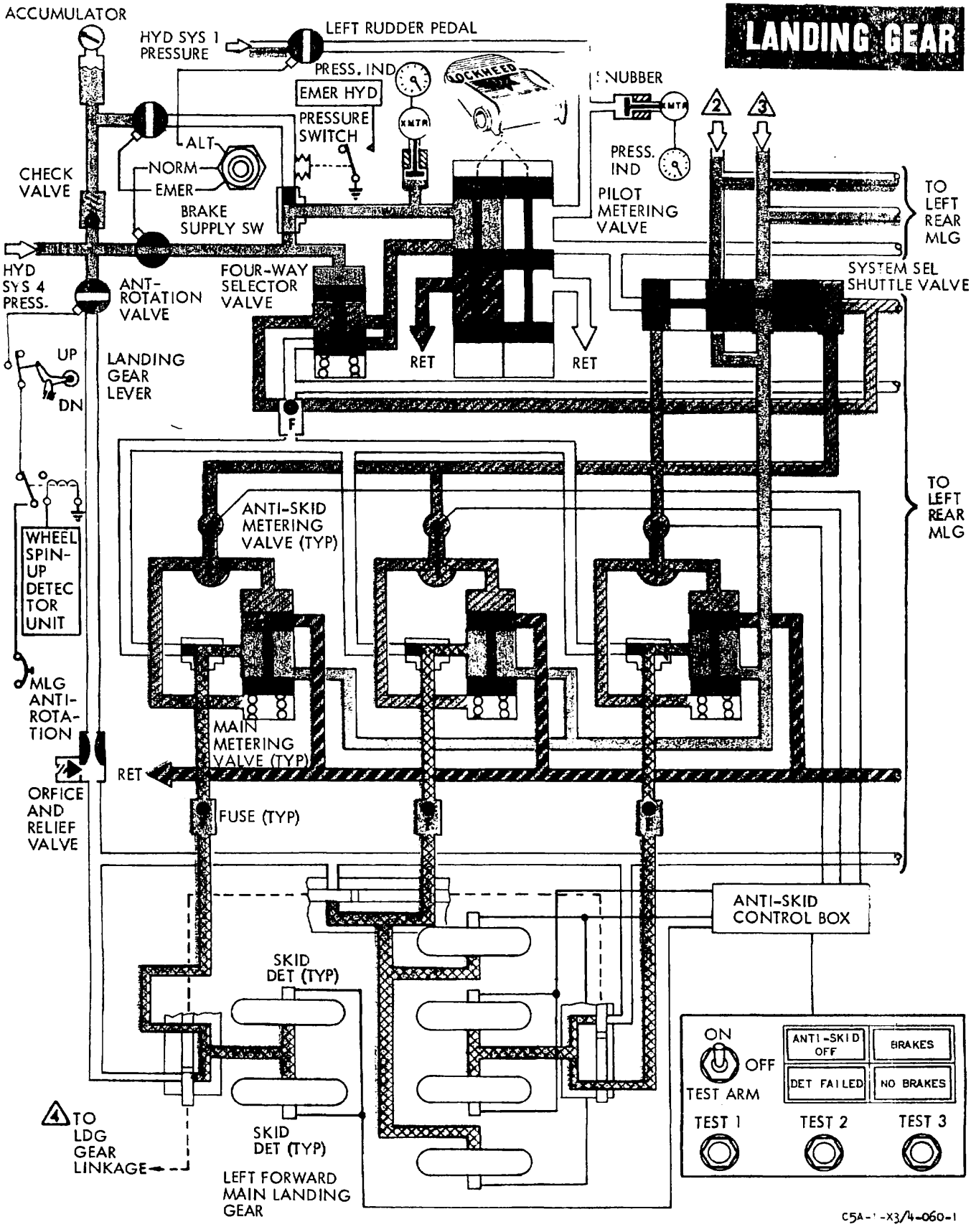

Figure 1-41. (Sheet 1 of 2)

BRAKE SYSTEM

NOTE

1. LEFT FORWARD MAIN LANDING GEAR BRAKE SYSTEM SHOWN. TYPICAL OF ALL BRAKE SYSTEMS.

(2) MLG DOWN ROTATION PRESSURE FROM AFT MLG MANIFOLD.

(3) MLG DOWN ROTATION PRESSURE FROM FWD MLG MANIFOLD.

(4) SEVEN PORT MECHANICAL SHUTTLE VALVE.

HYDRAULIC SYSTEM NO. 4 PRESSURE

PILOT METERED BRAKE PRESSURE

ANTI-SKID MODULATED BRAKE PRESSURE

RETURN

HYDRAULIC SYSTEM NO. 1 PRESSURE

BRAKE AND WHEEL IDENTIFICATION

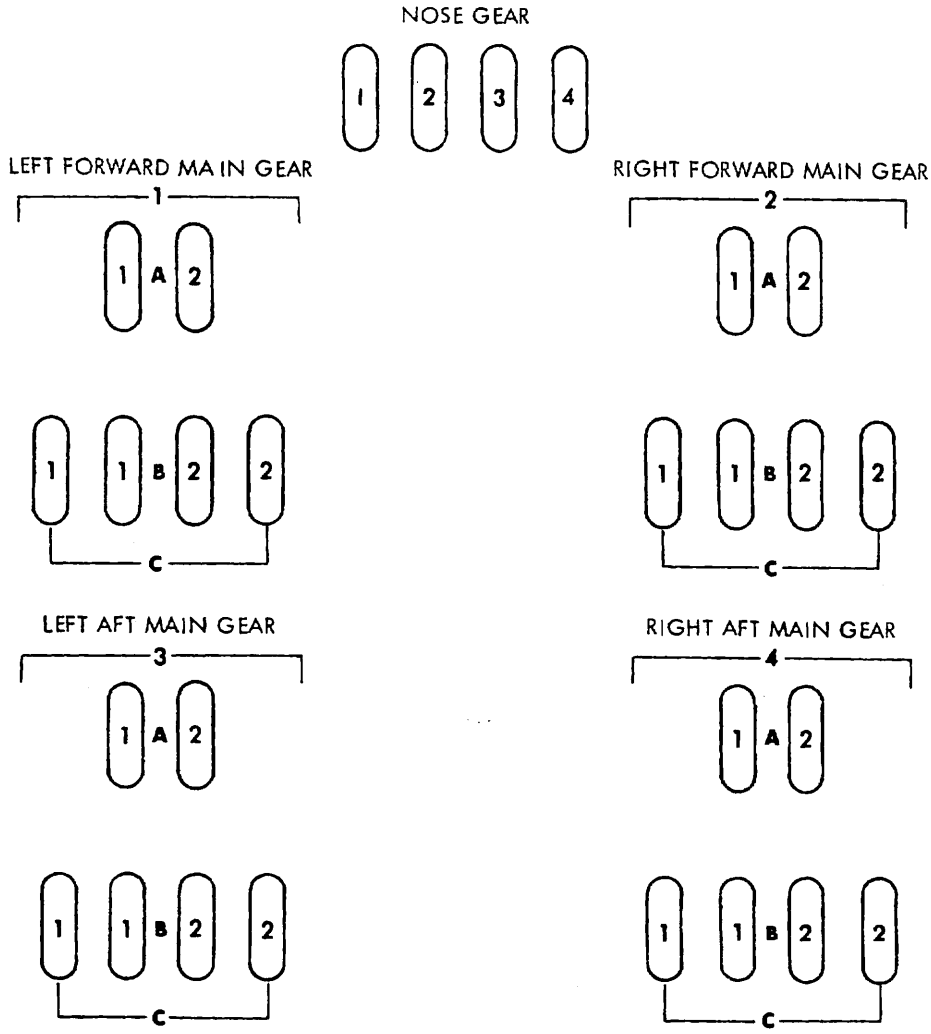

C5A-1-X3/4-060-2

Figure 1-41. (Sheet 2 of 2)

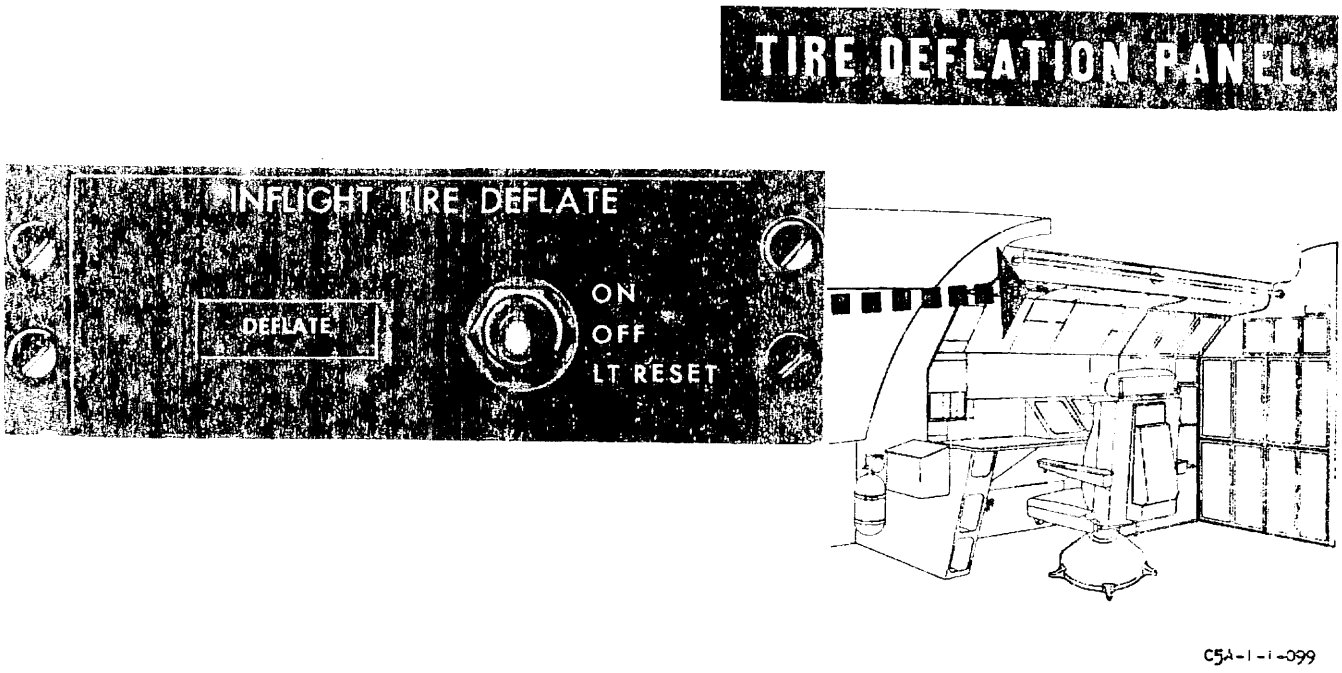
TIRE DEFLATION PANEL
INFLIGHT TIRE DEFLATE
DEFLATE
ON
OFF
LT RESET
C5A-1-1-099

Figure 1-42.

FLIGHT CONTROL SYSTEM (ROLL CONTROL)

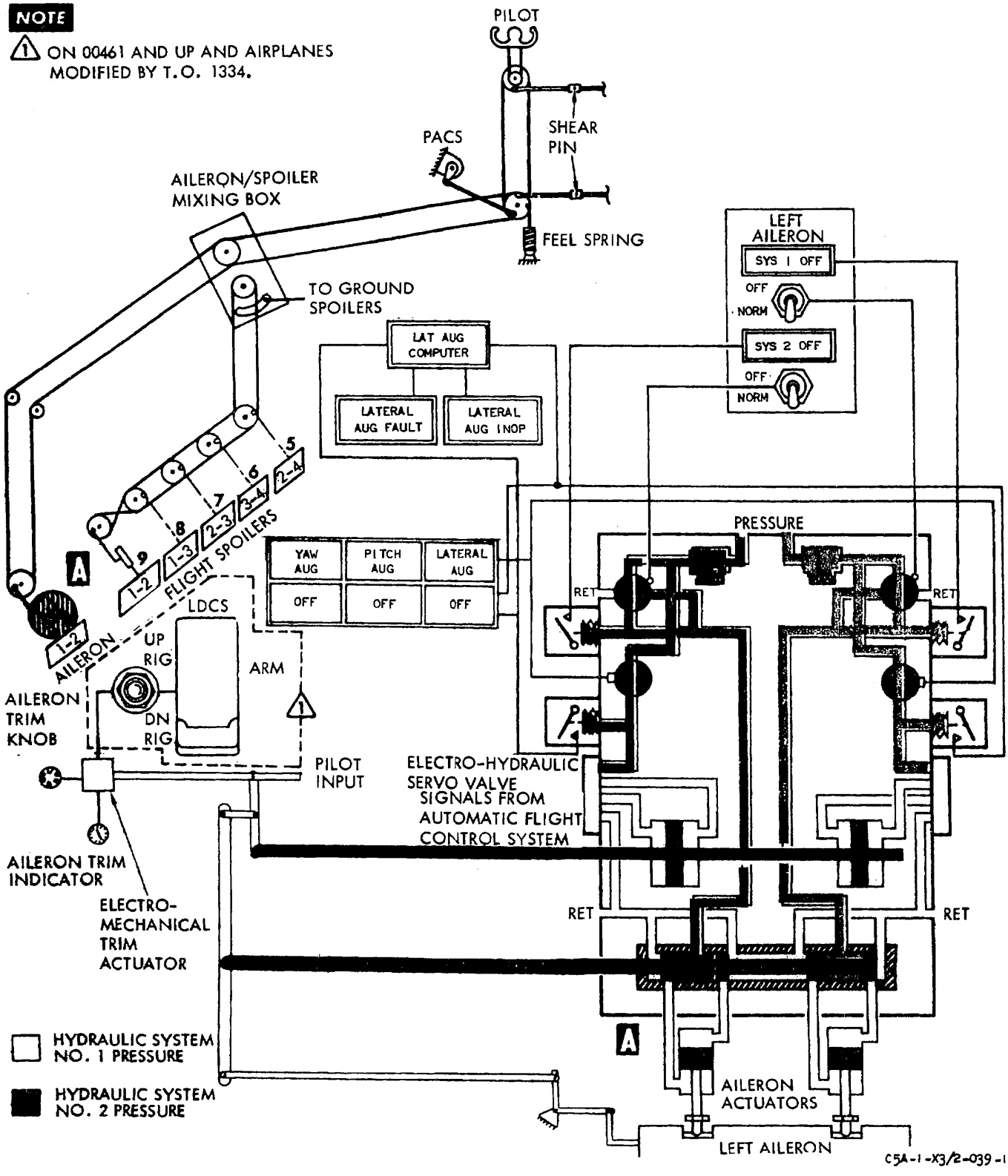

Figure 1-43. (Sheet 1 of 2)

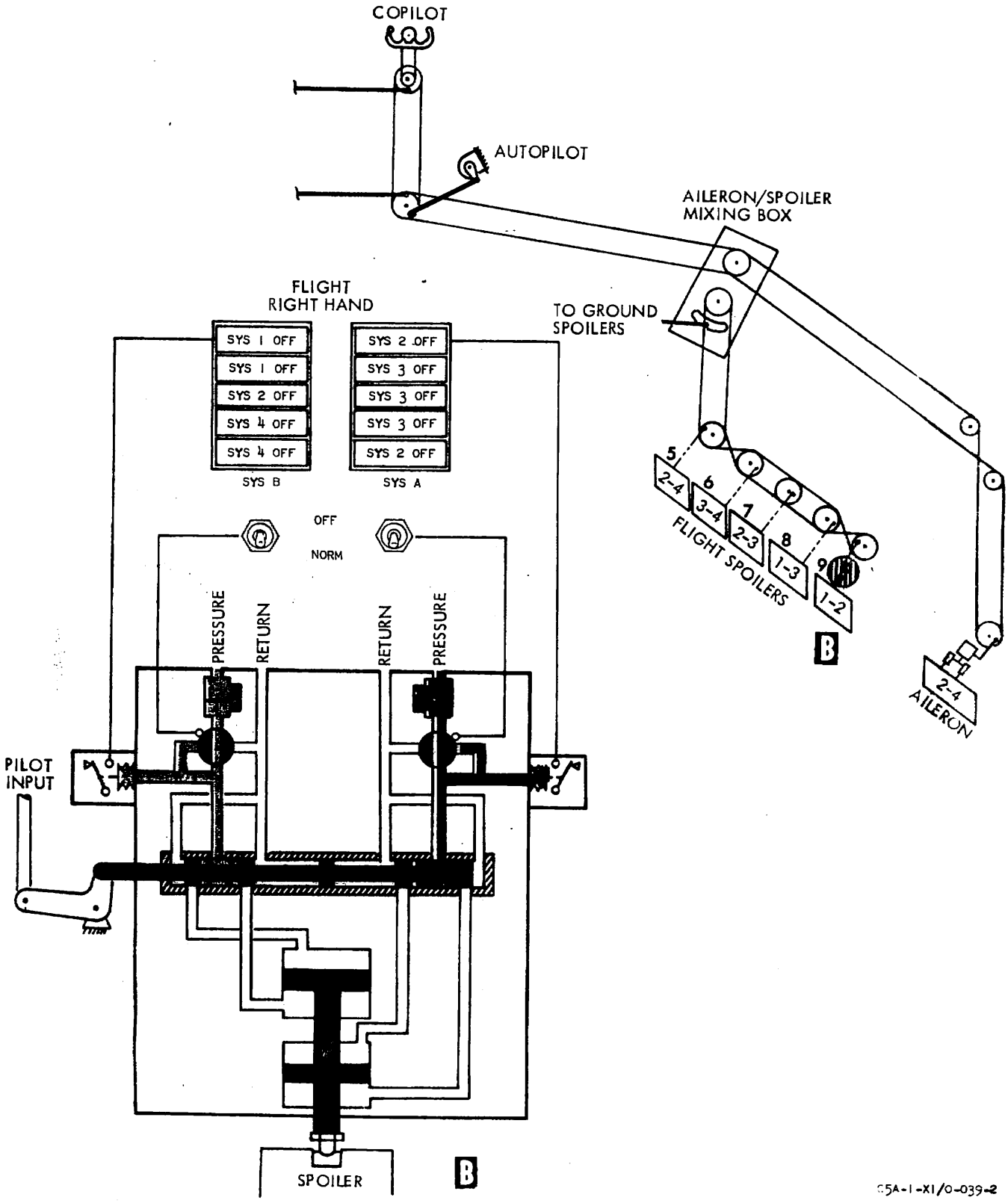

Figure 1-43. (Sheet 2 of 2)

CONTROL WHEEL

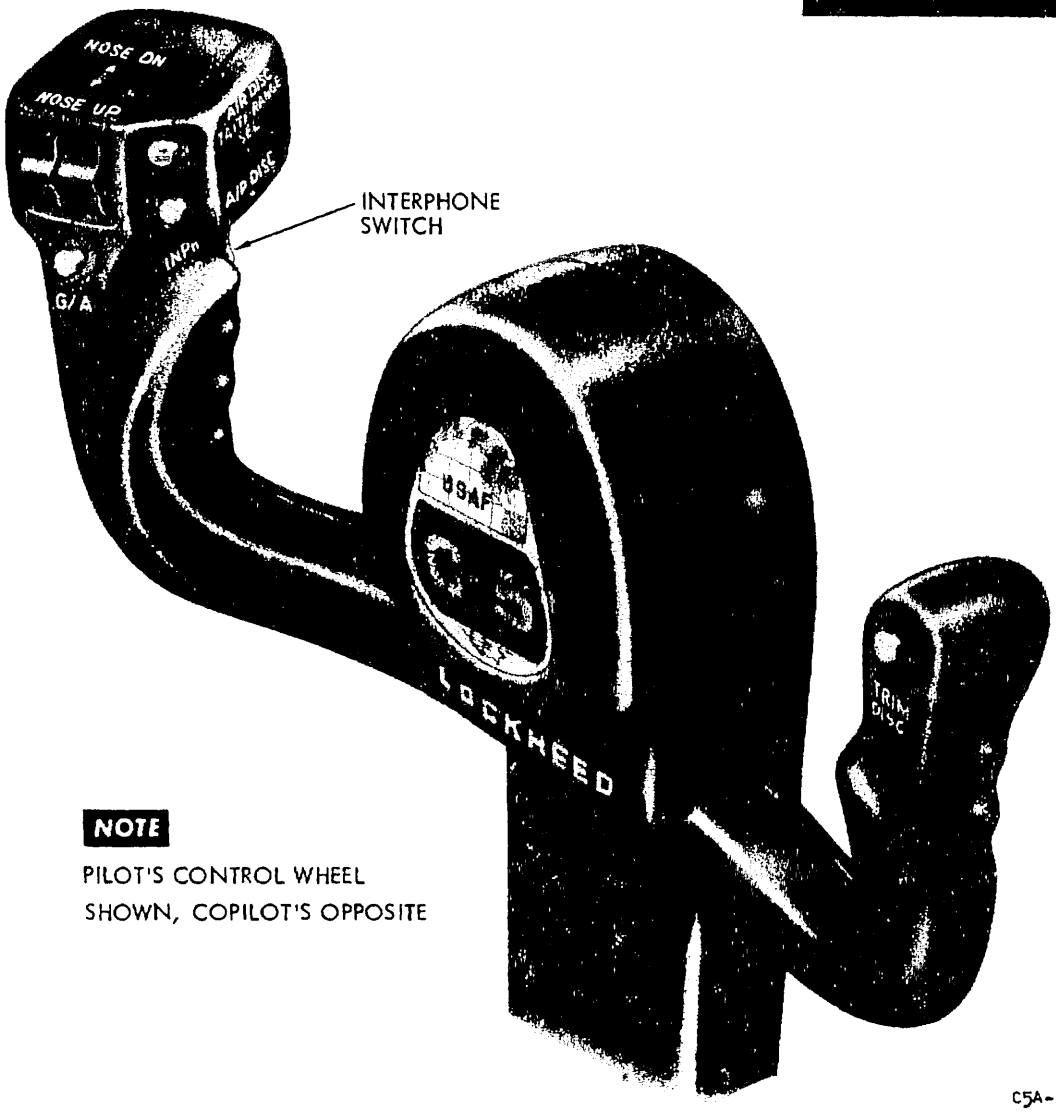

NOTE

PILOT'S CONTROL WHEEL SHOWN, COPILOT'S OPPOSITE

Figure 1-44.

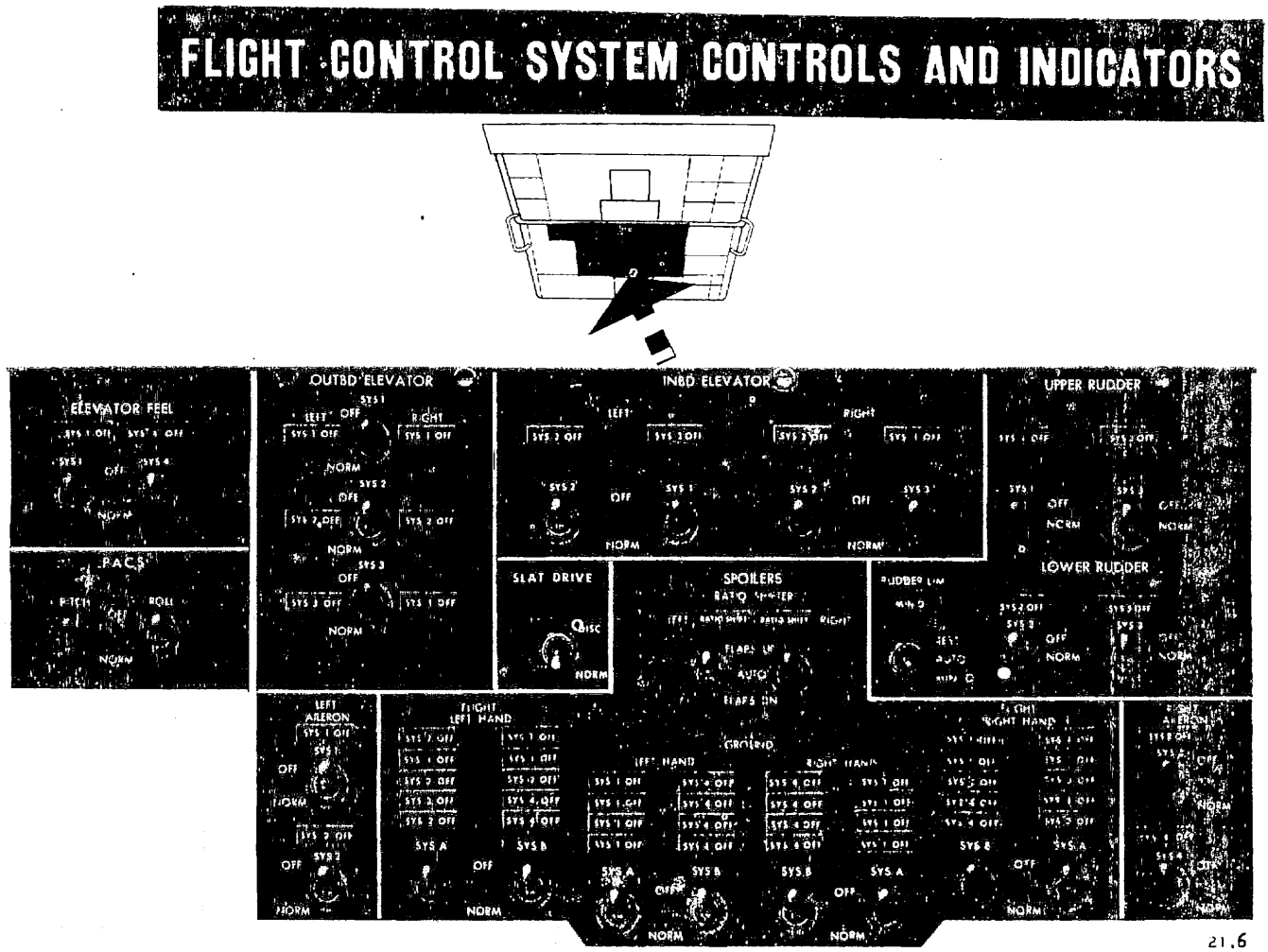

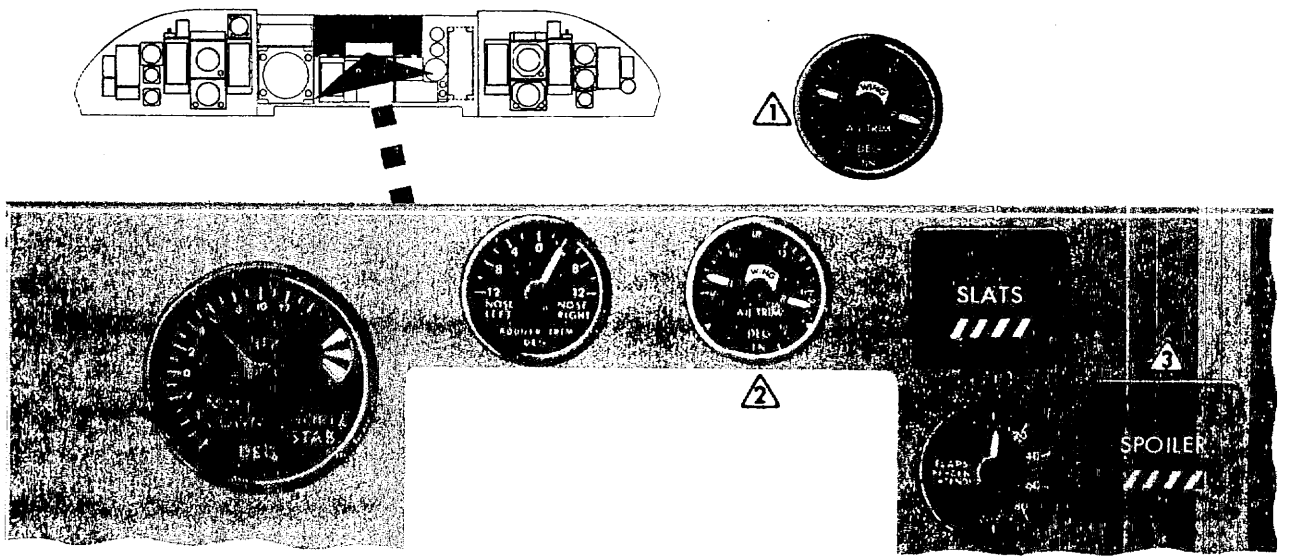

Figure 1-45. (Sheet 1 of 2)

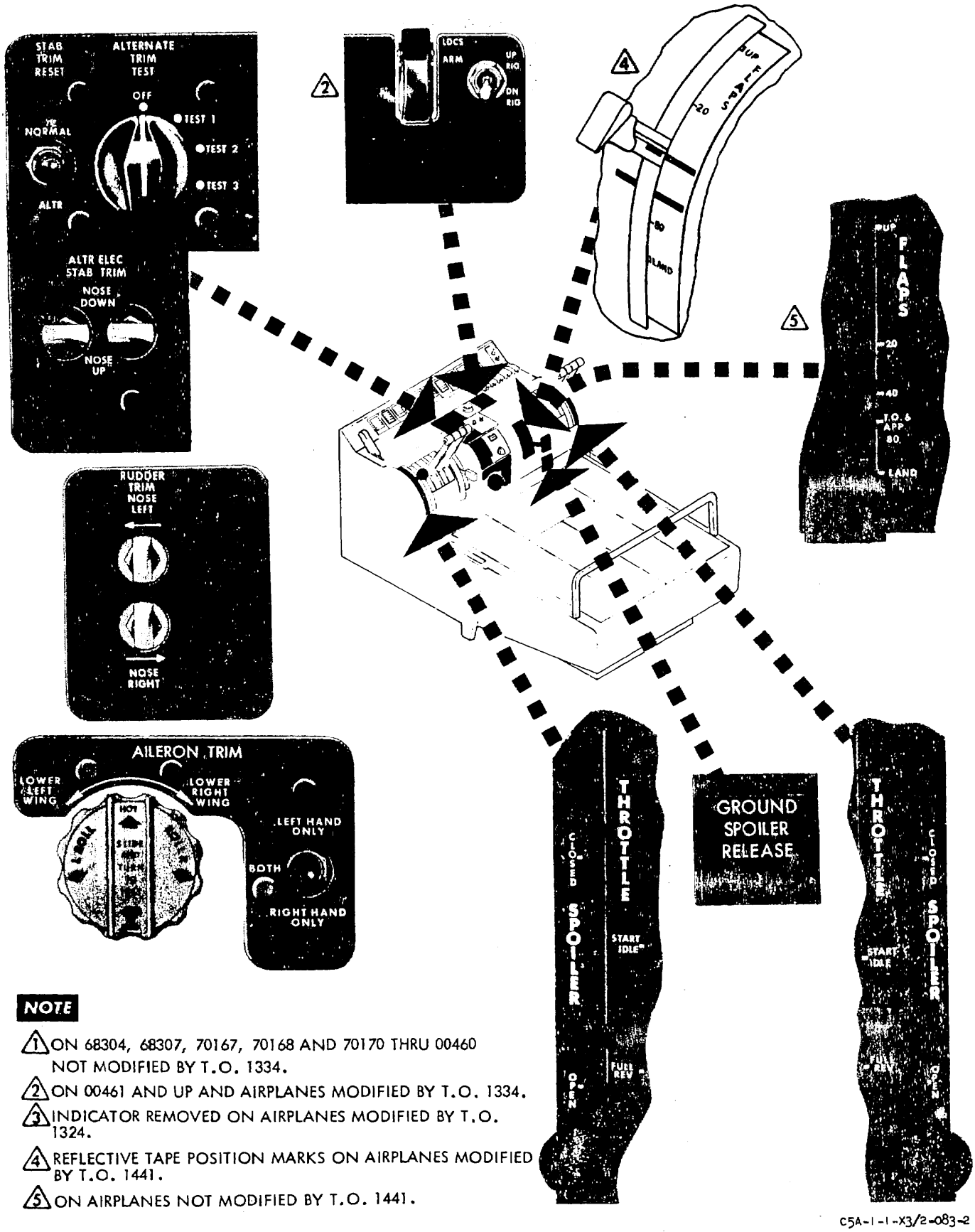

NOTE

1. ON 68304, 68307, 70167, 70168 AND 70170 THRU 00460 NOT MODIFIED BY T.O. 1334.
2. ON 00461 AND UP AND AIRPLANES MODIFIED BY T.O. 1334.
3. INDICATOR REMOVED ON AIRPLANES MODIFIED BY T.O. 1324.
4. REFLECTIVE TAPE POSITION MARKS ON AIRPLANES MODIFIED BY T.O. 1441.
5. ON AIRPLANES NOT MODIFIED BY T.O. 1441.

C5A-1-1-X3/2-083-2

Figure 1-45. (Sheet 2 of 2)

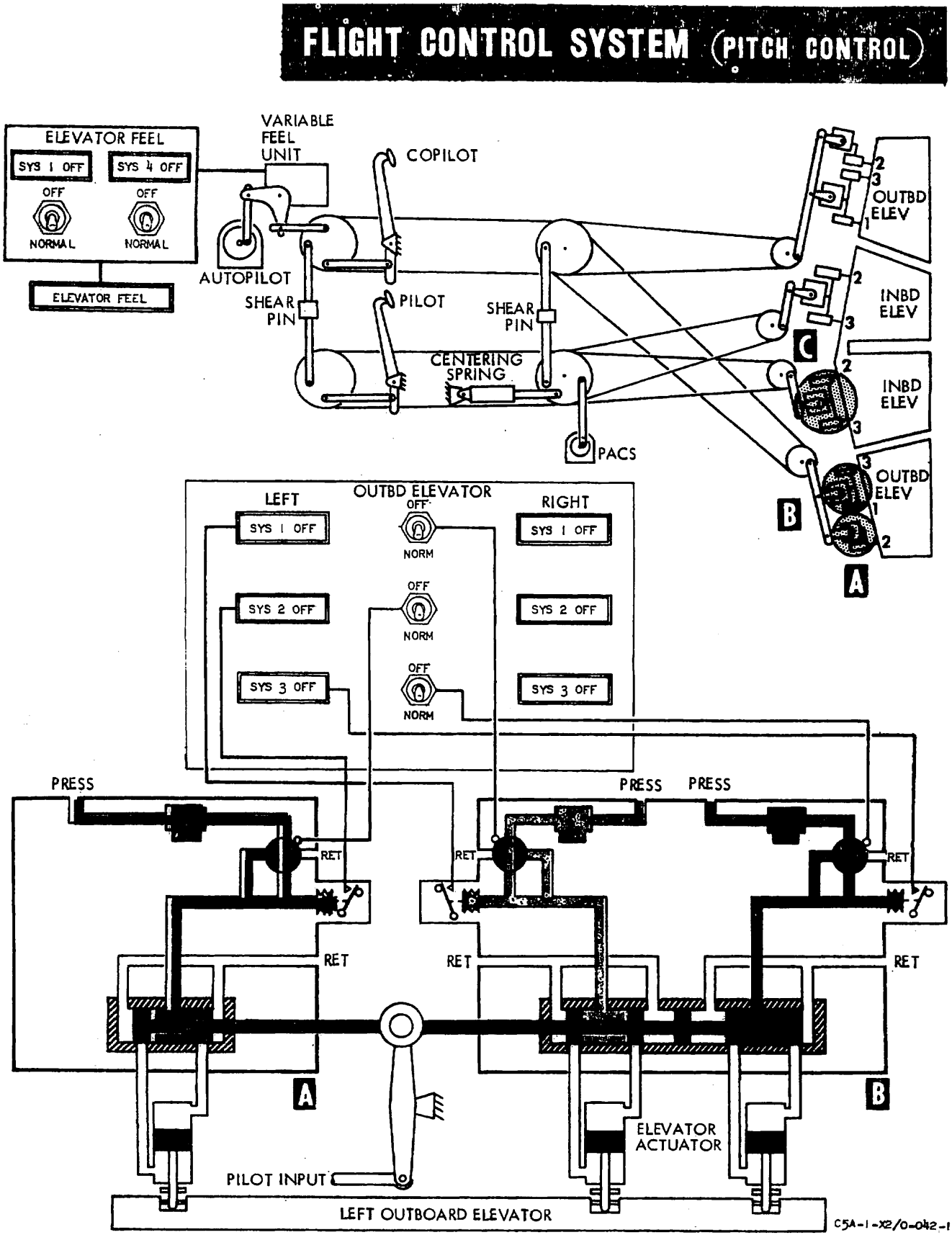

Figure 1-46. (Sheet 1 of 2)

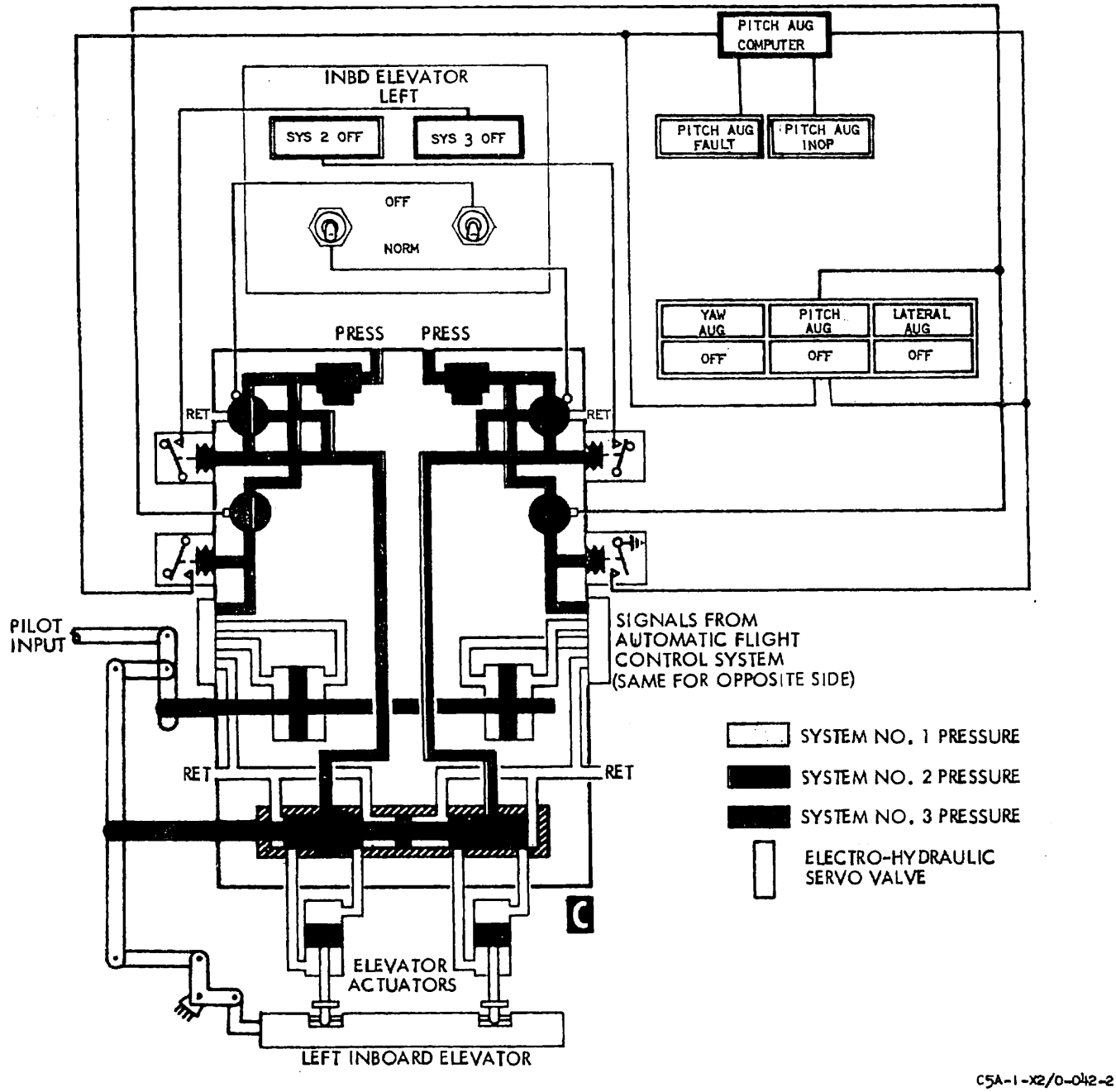

Figure 1-46. (Sheet 2 of 2)

PITCH TRIM SYSTEM

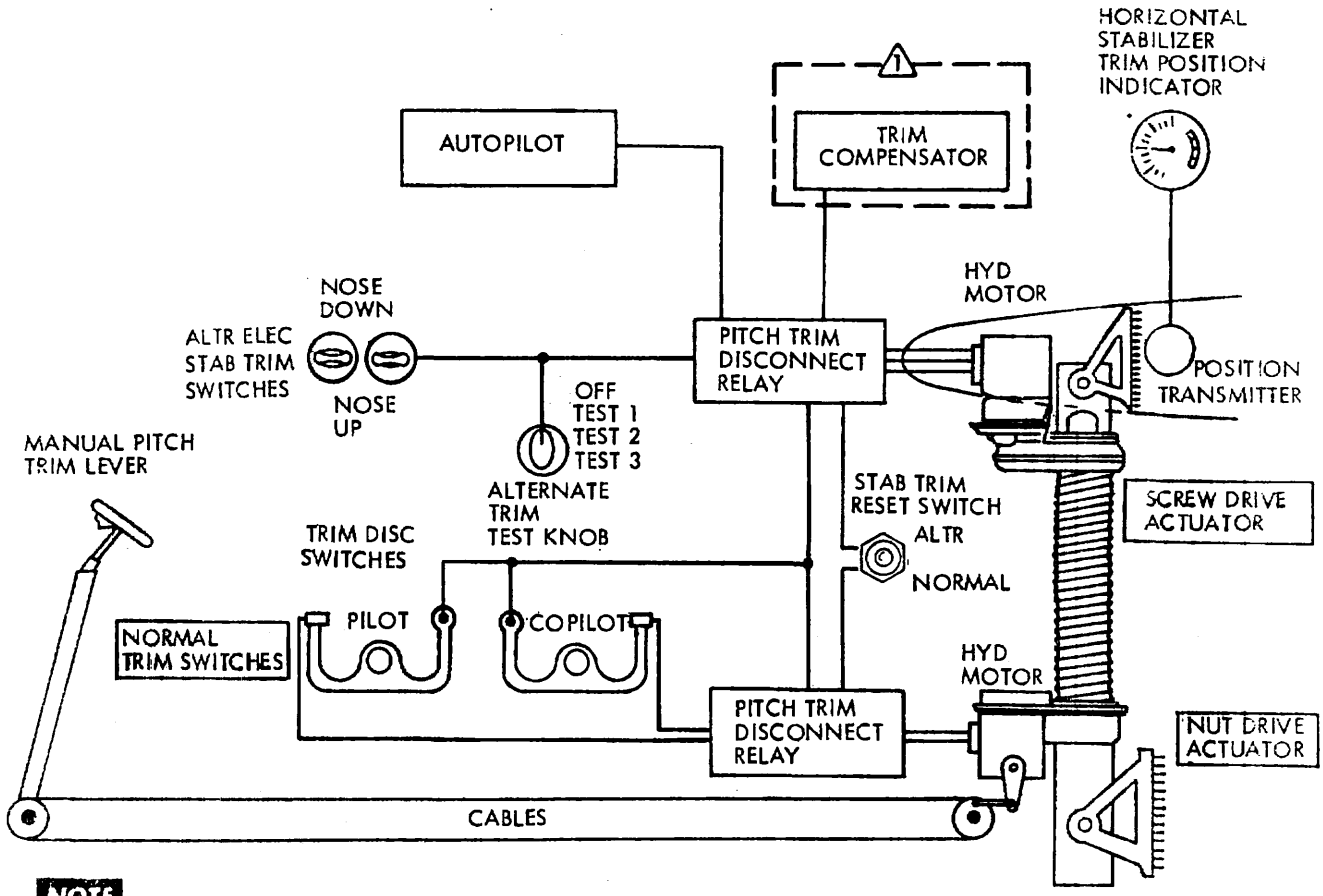

NOTE

1 REMOVED ON 68307, 70167, 70168, 80212 AND UP AND AIRPLANES MODIFIED BY T.O. 1091.

C5A-1-X4/0-056

Figure 1-47.

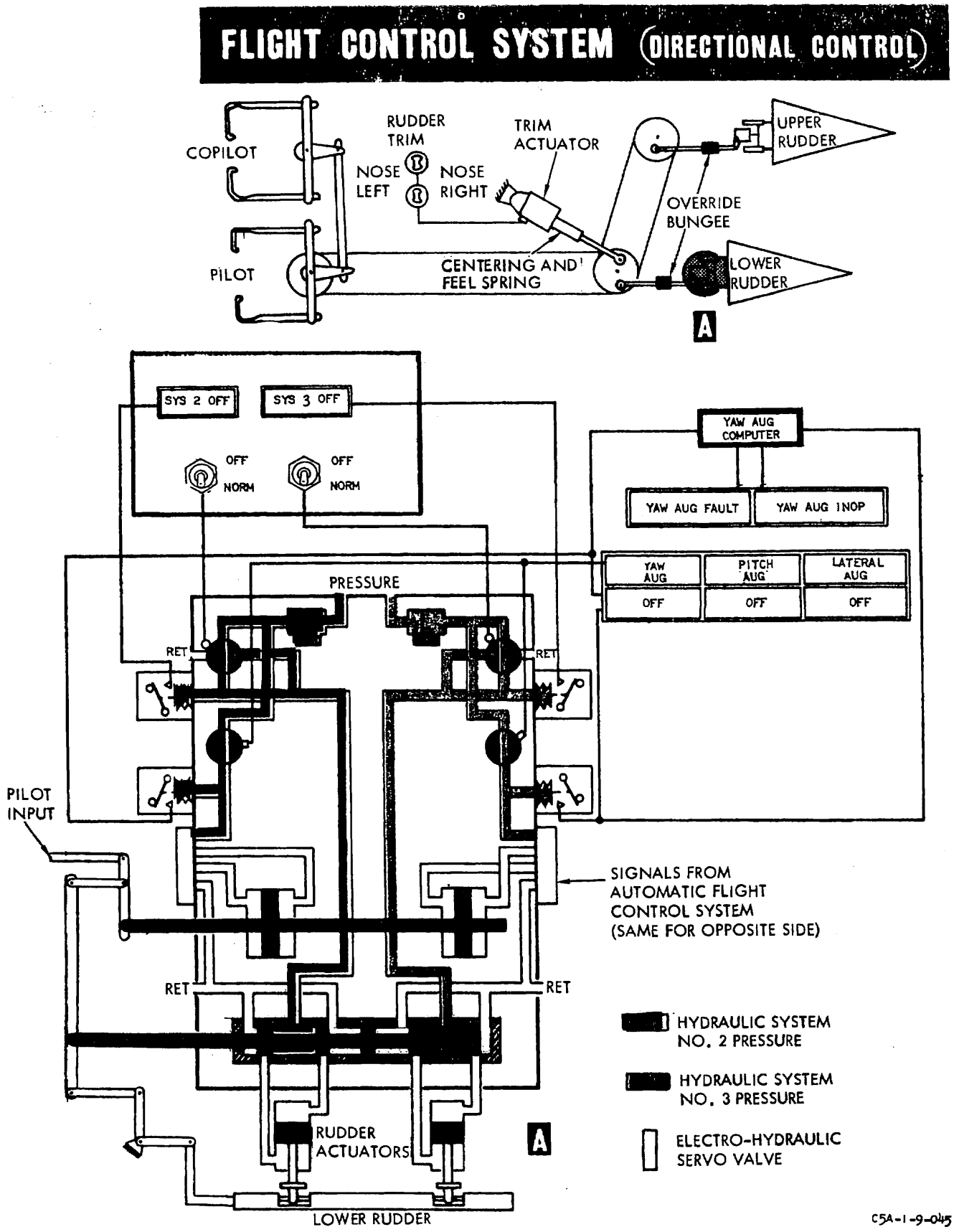
FLIGHT CONTROL SYSTEM (DIRECTIONAL CONTROL)
COPILOT
PILOT
RUDDER TRIM
NOSE LEFT
NOSE RIGHT
TRIM ACTUATOR
UPPER RUDDER
OVERRIDE BUNGEE
CENTERING AND FEEL SPRING
LOWER RUDDER
A
SYS 2 OFF
SYS 3 OFF
OFF
NORM
OFF
NORM
YAW AUG COMPUTER
YAW AUG FAULT
YAW AUG INOP
YAW AUG
PITCH AUG
LATERAL AUG
OFF
OFF
OFF
PRESSURE
RET
RET
RET
RET
PILOT INPUT
SIGNALS FROM AUTOMATIC FLIGHT CONTROL SYSTEM (SAME FOR OPPOSITE SIDE)
HYDRAULIC SYSTEM NO. 2 PRESSURE
HYDRAULIC SYSTEM NO. 3 PRESSURE
ELECTRO-HYDRAULIC SERVO VALVE
RUDDER ACTUATORS
A
LOWER RUDDER
C5A-1-9-045

Figure 1-48.

AUTOMATIC FLIGHT CONTROL SYSTEM

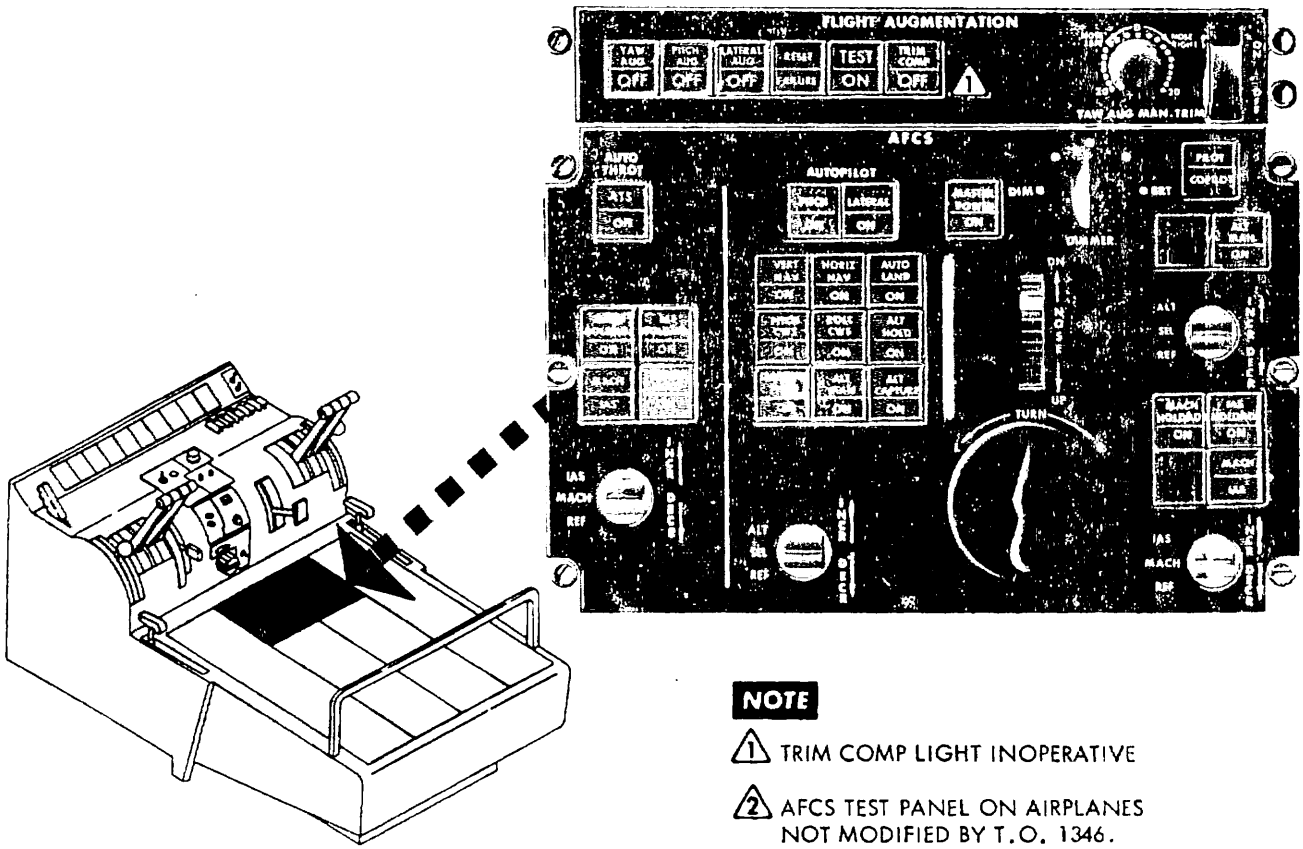

NOTE

1. TRIM COMP LIGHT INOPERATIVE
2. AFCS TEST PANEL ON AIRPLANES NOT MODIFIED BY T.O. 1346.

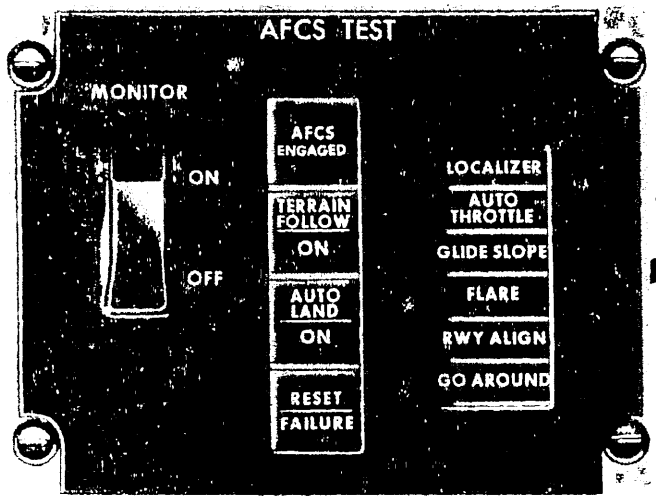

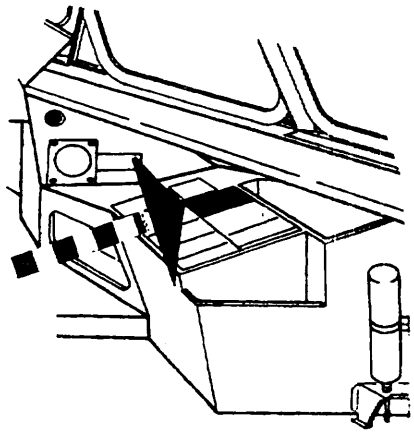

C5A-1-X4/0-053

Figure 1-49.

AUTOPILOT EQUIPMENT INTERFACE

AUTOPILOT MODE	REQUIRED EQUIPMENT								
	CADC NO. 1		CADC NO. 2		AHRU NO. 1	HSI		IDNE	
	AIRSPEED MACH	ALTITUDE & ALT RATE	AIRSPEED MACH	ALTITUDE & ALT RATE	HEADING	NO. 1	NO. 2	PRI	AUX
PITCH ATTITUDE HOLD									
PITCH WHEEL	X								
PITCH CWS	X								
ALTITUDE HOLD	X	X							
IAS OR MACH HOLD	X		③						
ALTITUDE CAPTURE	X	X		③					
VERNAV	X							X	
TERRAIN FOLLOWING	X								
RADAR APPROACH	X							X	
ROLL ATTITUDE HOLD									
TURN KNOB									
ROLL CWS									
HEADING HOLD	X				X				
HEADING SELECT	X					X			
VOR						X			
TACAN						X			
HEADING, DESTINATION STEER OR AIRDROP	X							④	④
ILS-LOCALIZER -GLIDESLOPE				X		X			
AUTOLAND- ROLL/YAW						X	X		
PITCH	X	X	X	X					

C5A-1-X3/4-203-1

Figure 1-50. (Sheet 1 of 2)

REQUIRED EQUIPMENT								
MMR	VHF NAV		GLIDESLOPE		RADAR ALTIMETER		TACAN	WHEEL SPIN-UP DETECTION
	NO. 1	NO. 2	NO. 1	NO. 2	NO. 1	NO. 2	NO. 1	
X								
X								
	X							
							X	
	①	②	①	②	①	②		
	X	X	X	X	X X	X X		X X

NOTE

① REQUIRED IF VOR/ILS-1 IS SELECTED.

② REQUIRED IF ILS-2 IS SELECTED.

③ REQUIRED FOR COPILOT TRANSFER SELECTION.

④ EITHER PRIOR AUX MAY BE USED FOR THESE MODES.

C5A-1-X3/4-203-2

Figure 1-50. (Sheet 2 of 2)

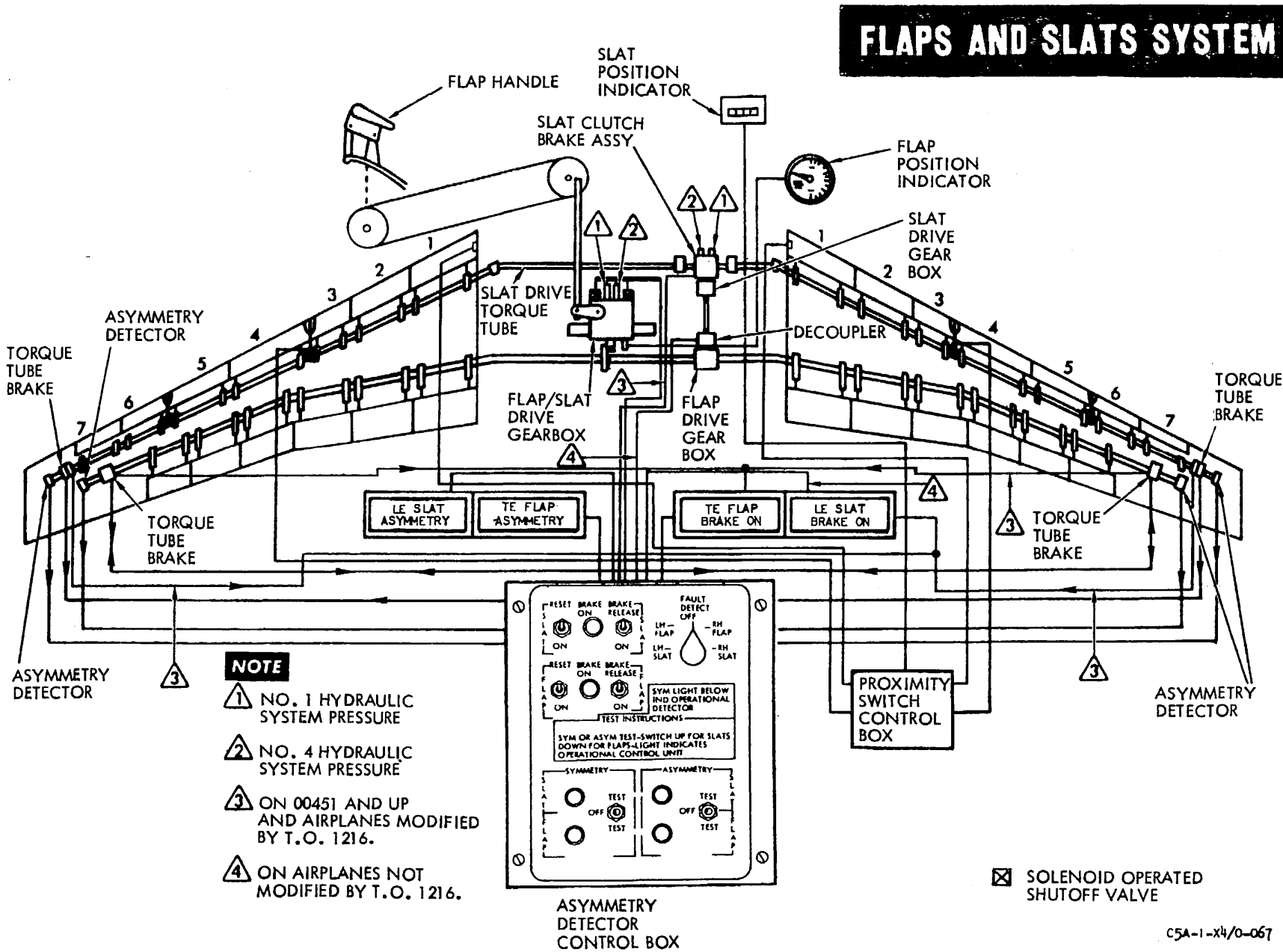
FLAPS AND SLATS SYSTEM
FLAP HANDLE
SLAT POSITION INDICATOR
SLAT CLUTCH BRAKE ASSY
FLAP POSITION INDICATOR
SLAT DRIVE GEAR BOX
SLAT DRIVE TORQUE TUBE
DECOUPLER
ASYMMETRY DETECTOR
TORQUE TUBE BRAKE
FLAP/SLAT DRIVE GEARBOX
FLAP DRIVE GEAR BOX
LE SLAT ASYMMETRY
TE FLAP ASYMMETRY
TE FLAP BRAKE ON
LE SLAT BRAKE ON
TORQUE TUBE BRAKE
TORQUE TUBE BRAKE
ASYMMETRY DETECTOR
ASYMMETRY DETECTOR
PROXIMITY SWITCH CONTROL BOX
ASYMMETRY DETECTOR CONTROL BOX
NOTE
1 NO. 1 HYDRAULIC SYSTEM PRESSURE
2 NO. 4 HYDRAULIC SYSTEM PRESSURE
3 ON 00451 AND UP AND AIRPLANES MODIFIED BY T.O. 1216.
4 ON AIRPLANES NOT MODIFIED BY T.O. 1216.
SOLENOID OPERATED SHUTOFF VALVE
C5A-1-X4/0-067

Figure 1-51.

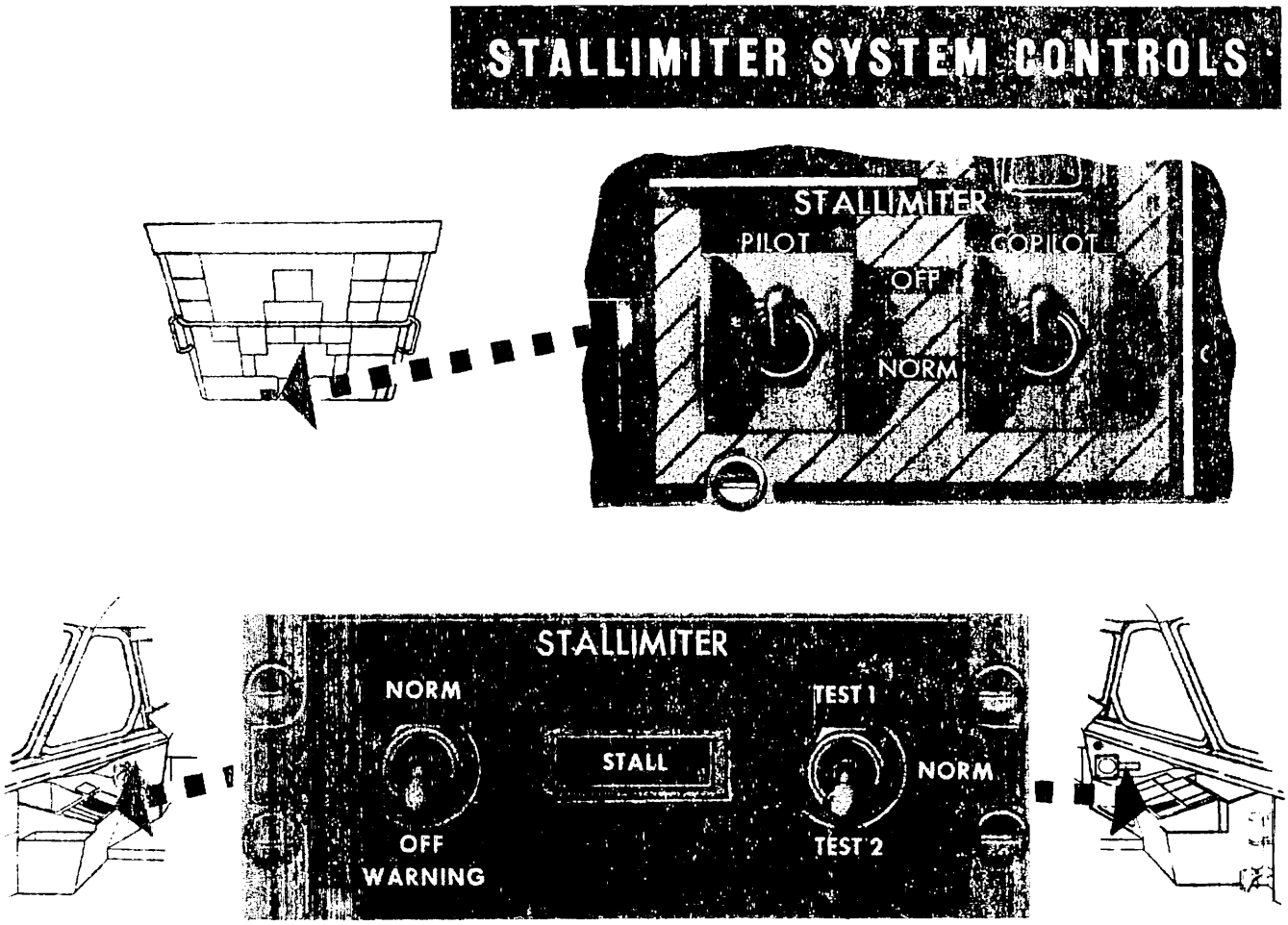

C5A-1-X3/4-100

Figure 1-52.

GROUND SPOILER SYSTEM

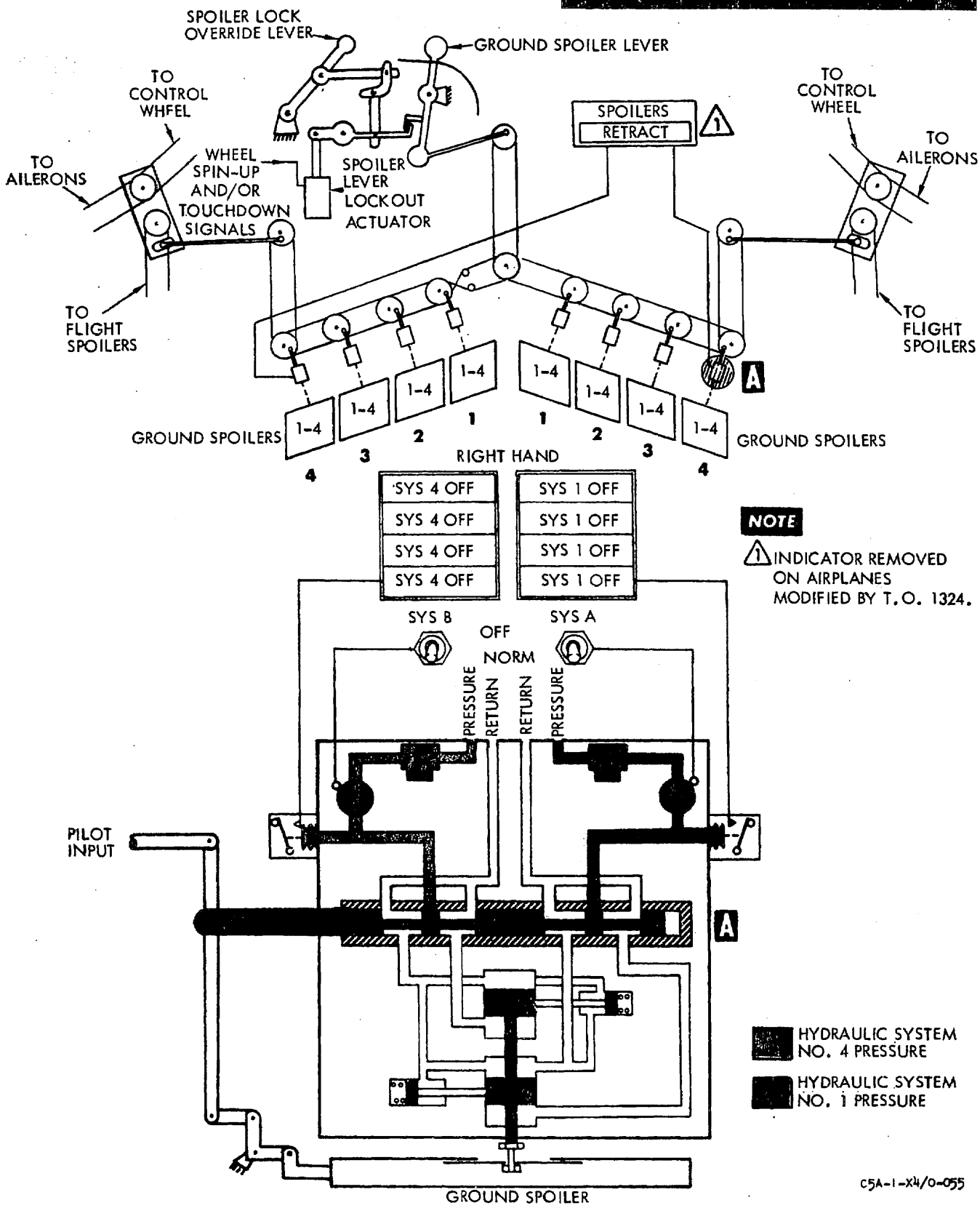

Figure 1-53.

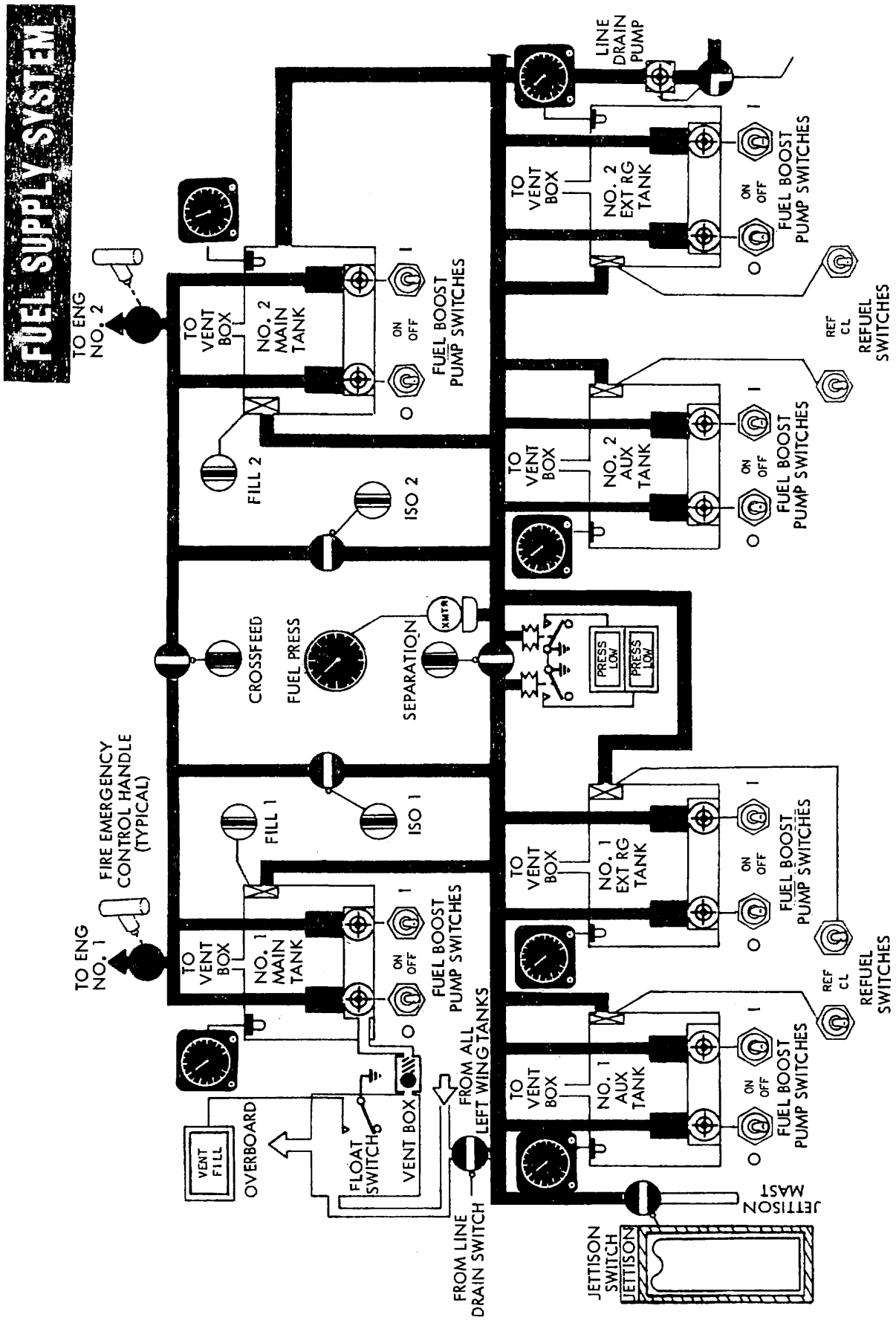

C5A-1-X1/0-038-1

Figure 1-54. (Sheet 1 of 3)

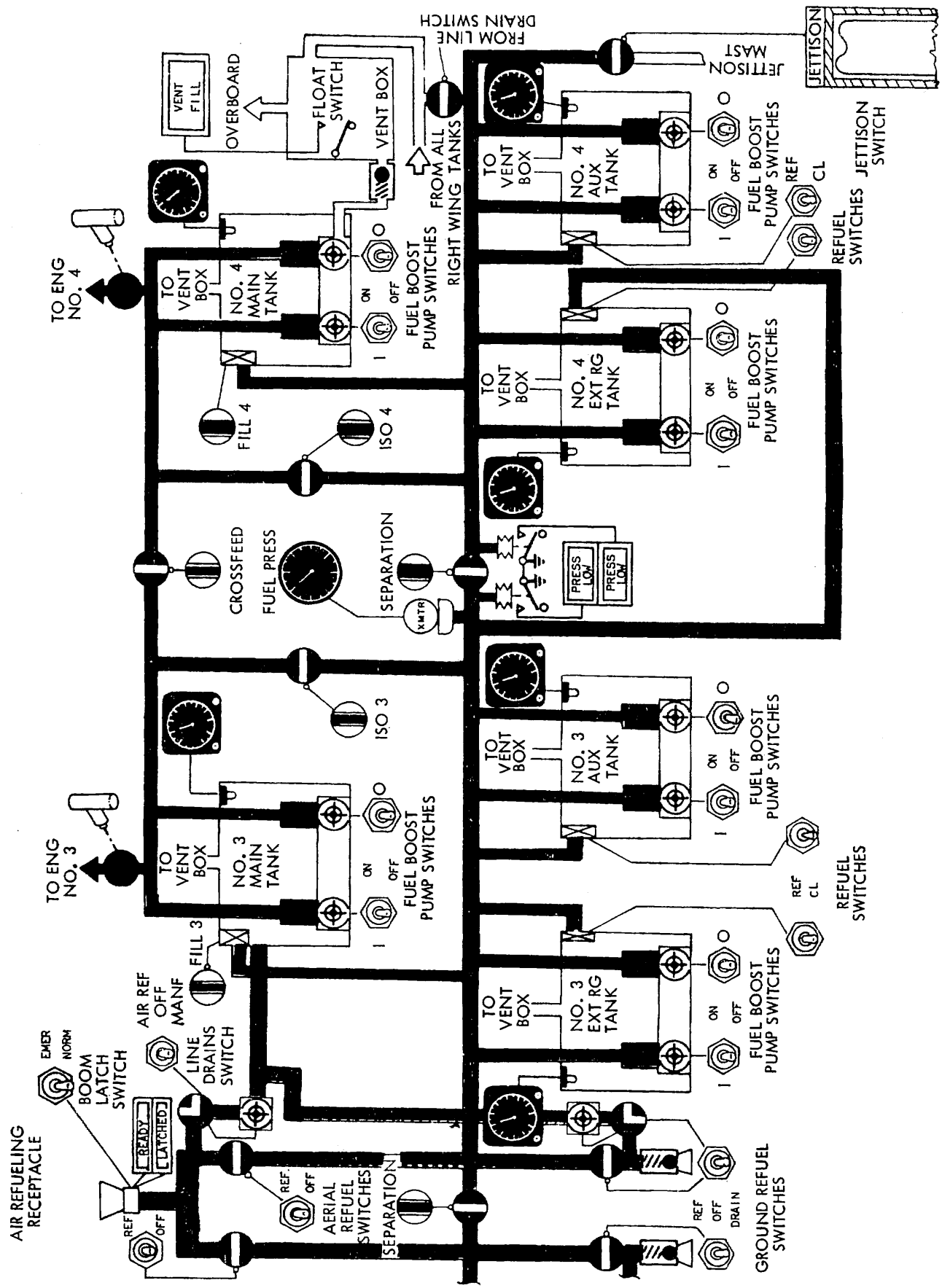

Figure 1-54. (Sheet 2 of 3)

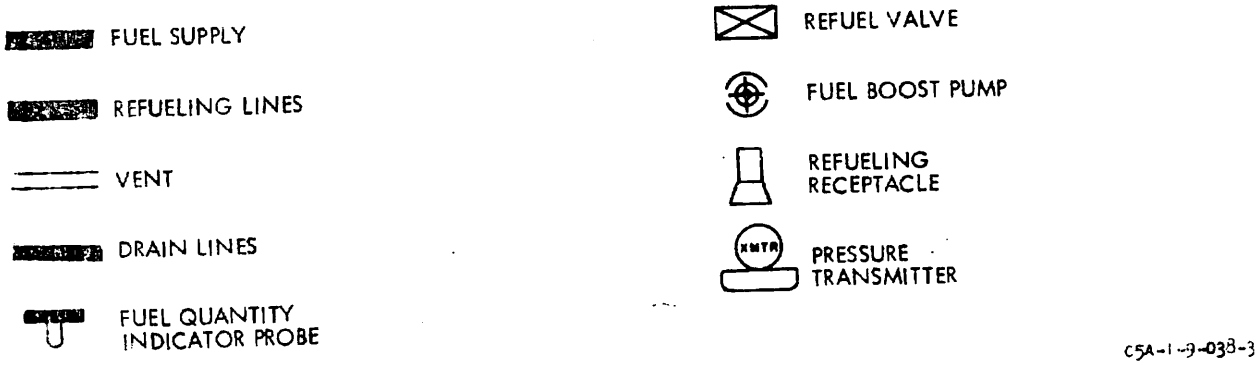

Figure 1-54. (Sheet 3 of 3)

FUEL QUANTITY DATA TABLE

TANK	USEABLE FUEL	
	GAL	LB
NO. 1 OR NO. 4 MAIN	3625	23,563
NO. 2 OR NO. 3 MAIN	3625	23,563
NO. 1 OR NO. 4 AUX	4625	30,063
NO. 2 OR NO. 3 AUX	4625	30,063
NO. 1 OR NO. 4 EXT RANGE	4000	26,000
NO. 2 OR NO. 3 EXT RANGE	4000	26,000
TOTAL ALL TANKS	49,000	318,500

NOTE

1. WEIGHT IS BASED ON FUEL AT 6.5 POUNDS PER GALLON.
2. SUCTION FEED (BOOST PUMPS OFF) FROM A MAIN TANK REQUIRES THAT THE ASSOCIATED CROSSFEED AND ISOLATION VALVES BE CLOSED.
3. DURING SUCTION FEED, THE USABLE FUEL QUANTITY IN NO. 1 OR NO. 4 MAIN TANK IS REDUCED BY 2432 POUNDS AND THE QUANTITY IN NO. 2 OR NO. 3 MAIN TANK IS REDUCED BY 113 POUNDS.

C5A-1-X1/0-104

Figure 1-55.

ALTERNATE FUEL SEQUENCE

Fuel Loading/Usage

Maximum fuel load per tank is:
Main 23,562 Pounds
Auxiliary 30,062 Pounds
Extended Range 26,000 Pounds

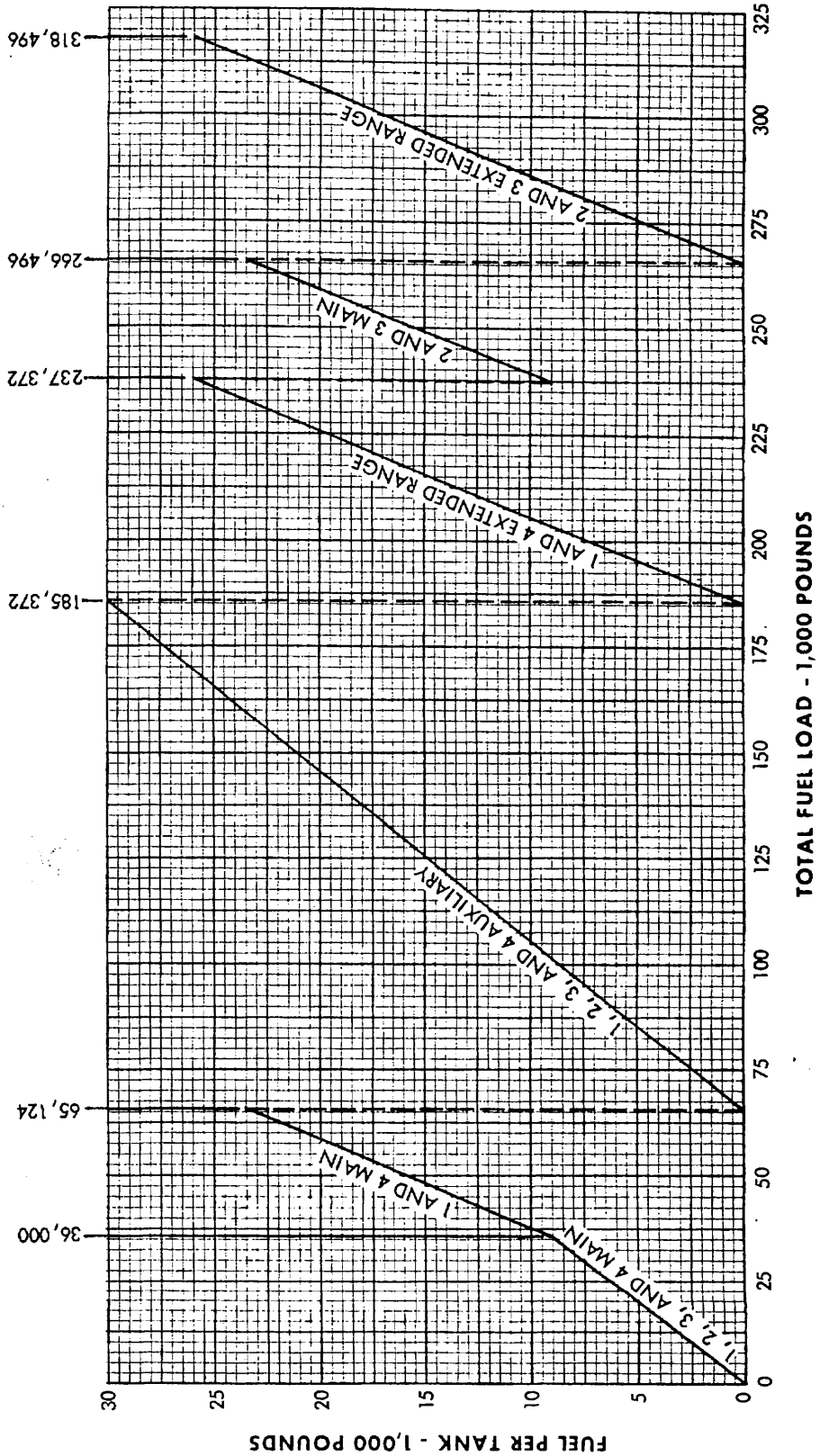

Figure 1-55A.

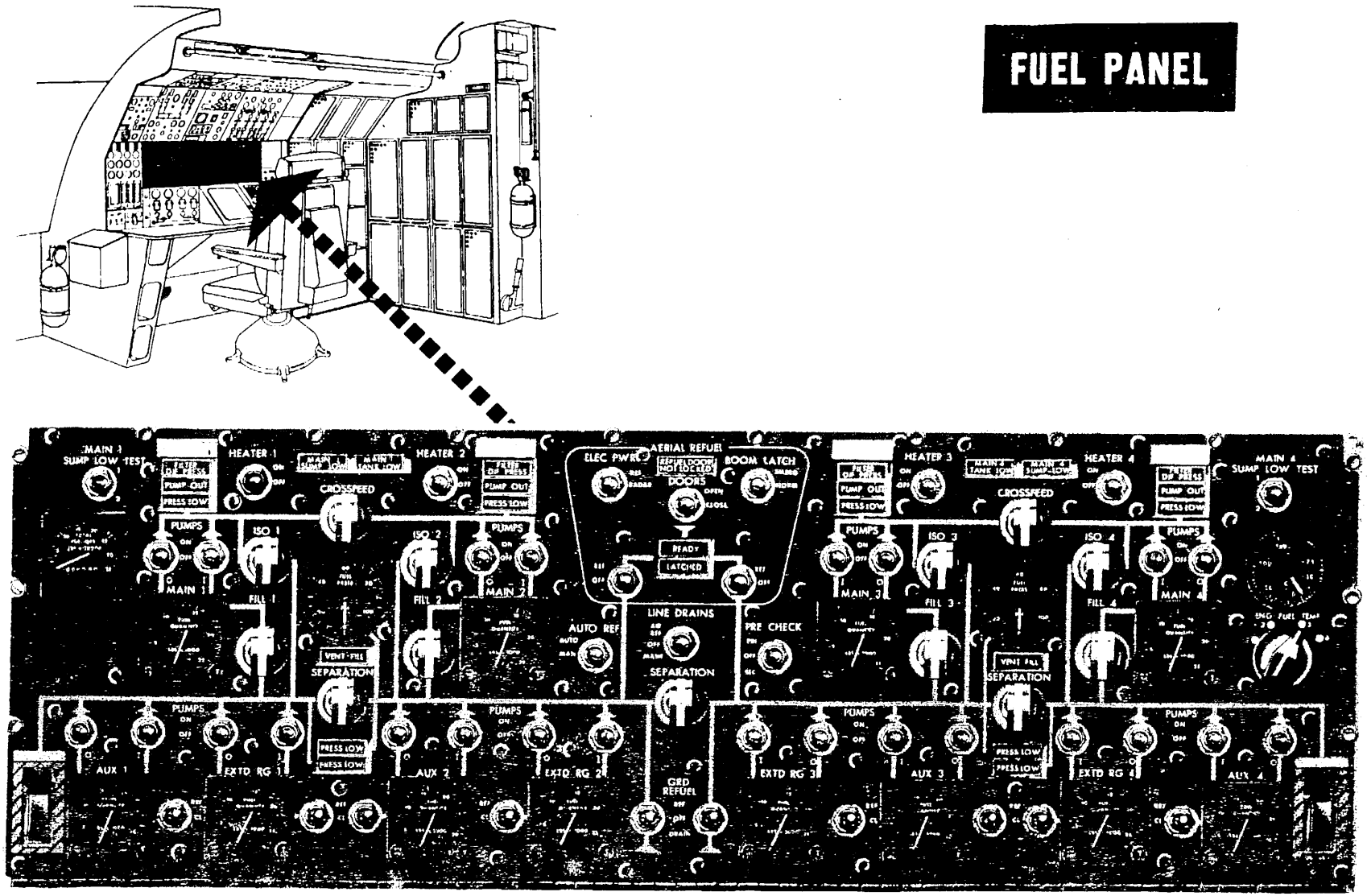

C5A-1-X3/3-026

Figure 1-56.

FSS COMPONENT LOCATION DIAGRAM

(ON AIRPLANES MODIFIED BY T.O. 1387)

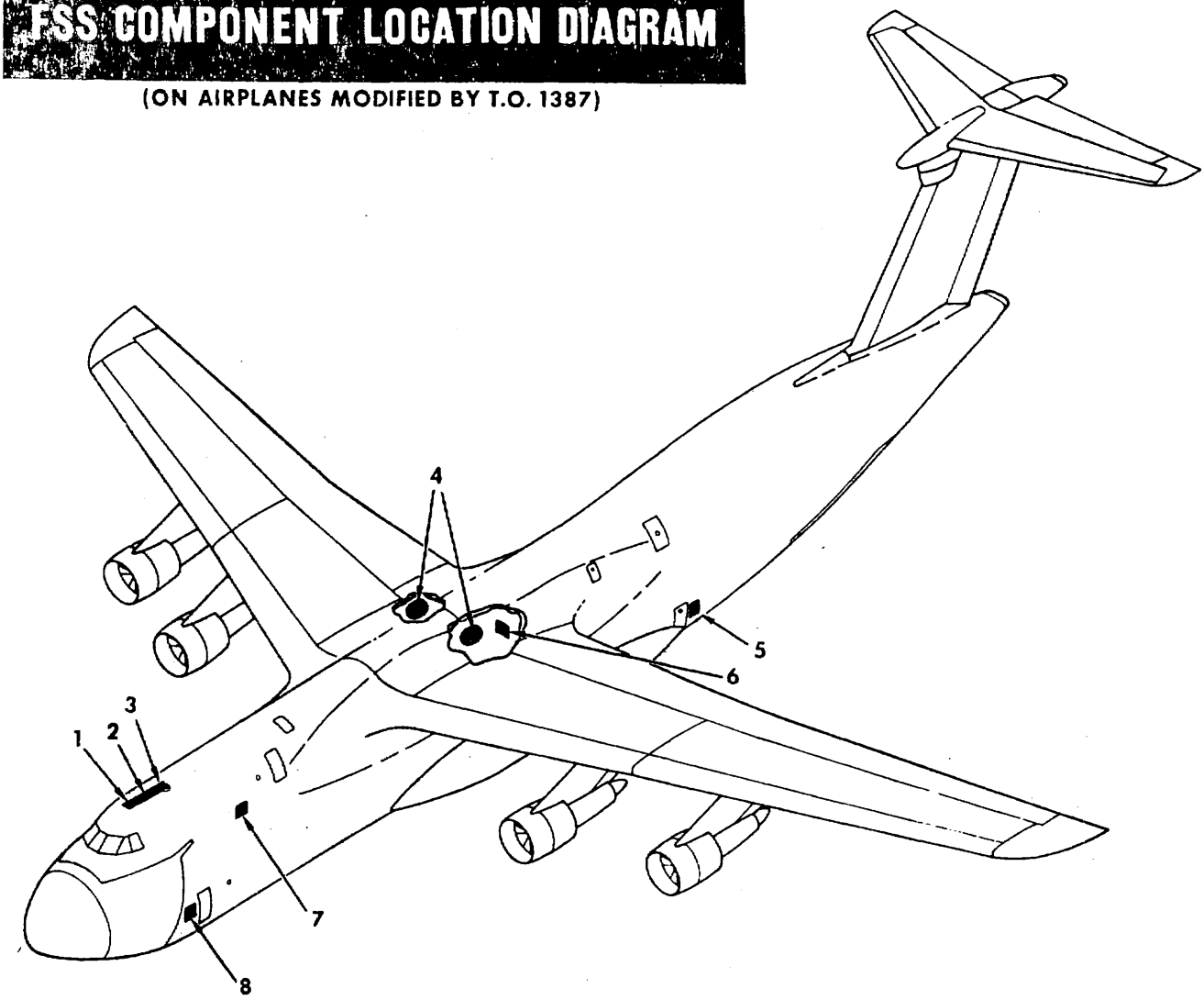

1. FE 1301 FIRE SUPPRESSION CONTROL PANEL (FLIGHT ENGINEER'S STATION)
2. FE 1301 FIRE SUPPRESSION CONTROL AND INDICATOR PANEL (FLIGHT ENGINEER'S STATION)
3. NITROGEN FIRE SUPPRESSION CONTROL AND INDICATOR PANEL (FLIGHT ENGINEER'S STATION)
4. FSS LIQUID NITROGEN DEWARS (WING ROOT AREA)
5. CARGO COMPARTMENT FE 1301 FIRE SUPPRESSION CONTROL AND INDICATOR PANEL
6. LIQUID NITROGEN SERVICE PANEL (AFT RIGHT WHEEL WELL-FORWARD BULKHEAD)
7. CENTRAL PROCESSING UNIT (AVIONICS EQUIPMENT BAY NO. 2)
8. NOSE WHEEL WELL NITROGEN FIRE SUPPRESSION CONTROL AND INDICATOR PANEL

C5A-1-X4/1-210

Figure 1-56A.

FSS CONTROL AND INDICATOR PANELS

(ON AIRPLANES MODIFIED BY T.O. 1387)

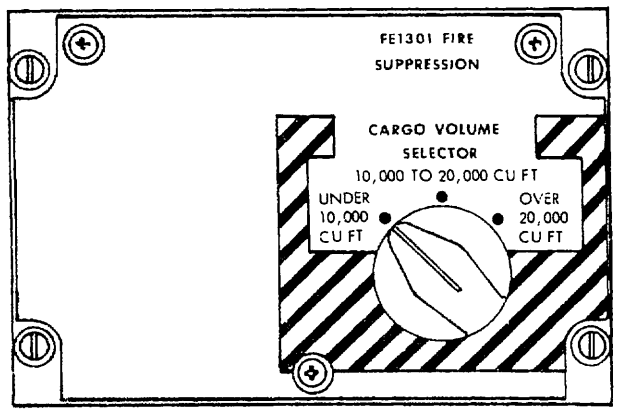

A

FE 1301 FIRE SUPPRESSION
CONTROL PANEL

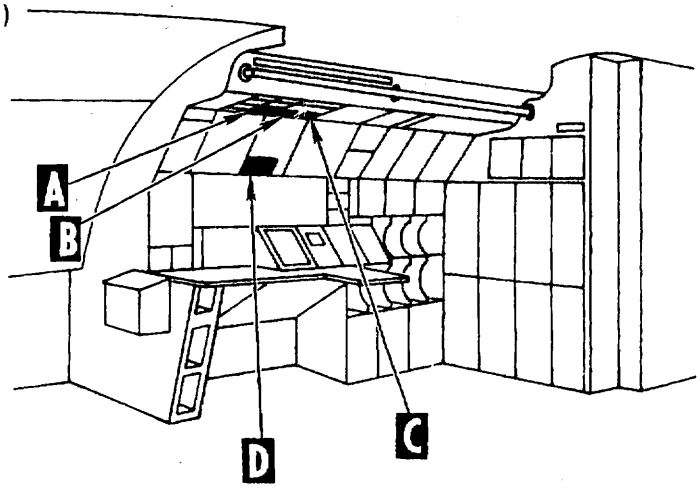

FLIGHT ENGINEER'S STATION

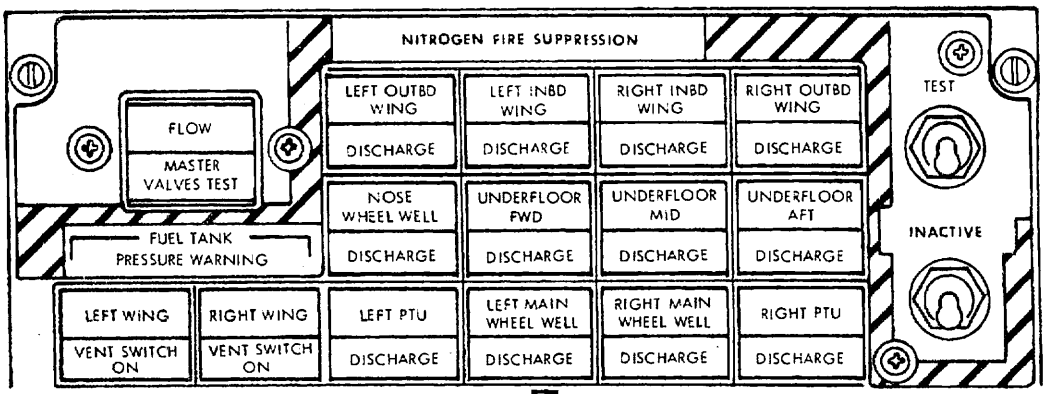

B

NITROGEN FIRE SUPPRESSION
CONTROL AND INDICATOR PANEL

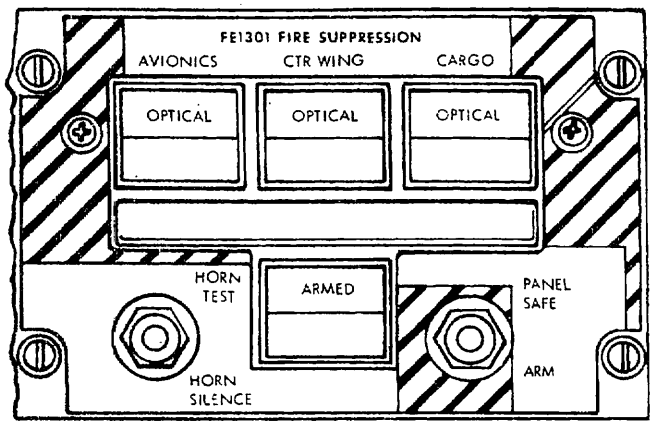

C

FE 1301 FIRE SUPPRESSION
CONTROL AND INDICATOR PANEL

D

FLIGHT ENGINEER'S
ANNUNCIATOR PANEL

C5A-1-X4/1-211-1

Figure 1-56B. (Sheet 1 of 3)

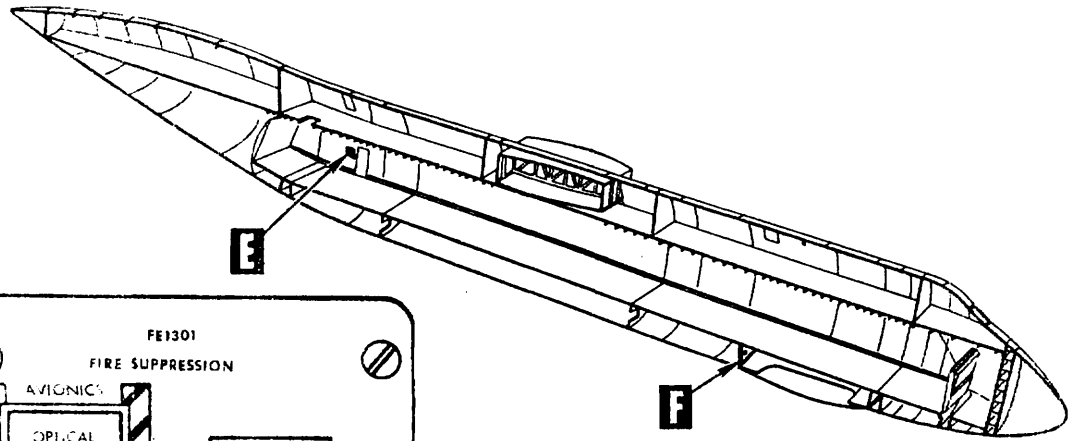

NOTE

1. THIS SWITCH IS NOT OPERATIVE.

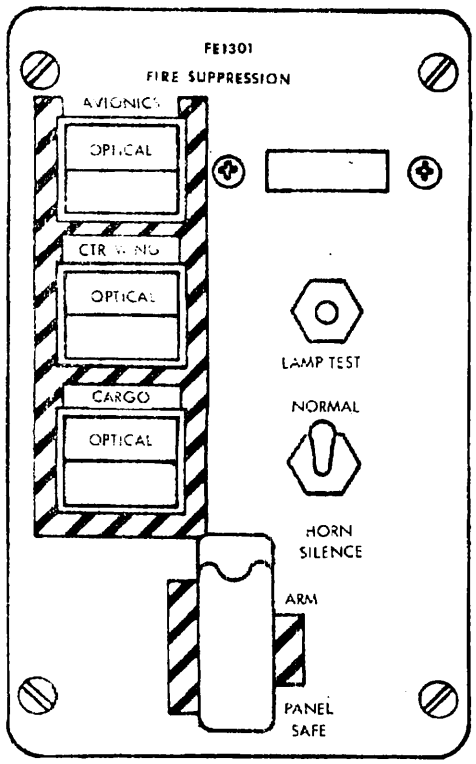

E

CARGO COMPARTMENT FE1301 FIRE SUPPRESSION CONTROL AND INDICATOR PANEL

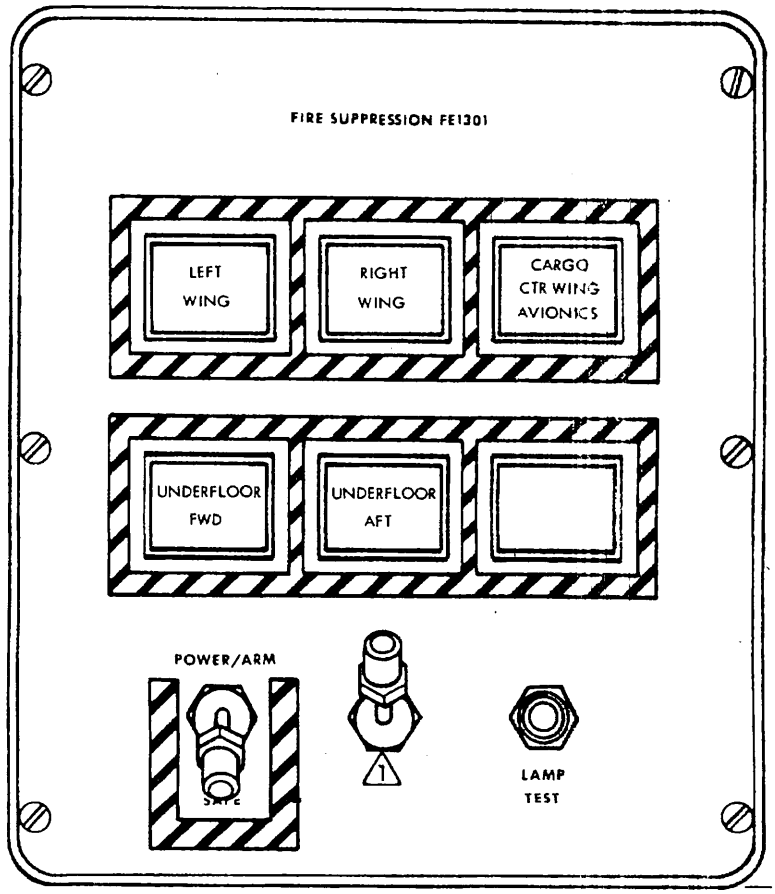

F

NOSE WHEEL WELL NITROGEN AND FE1301 FIRE SUPPRESSSION CONTROL AND INDICATOR PANEL

C5A-1-x4/1-211-2

Figure 1-56B. (Sheet 2 of 3)

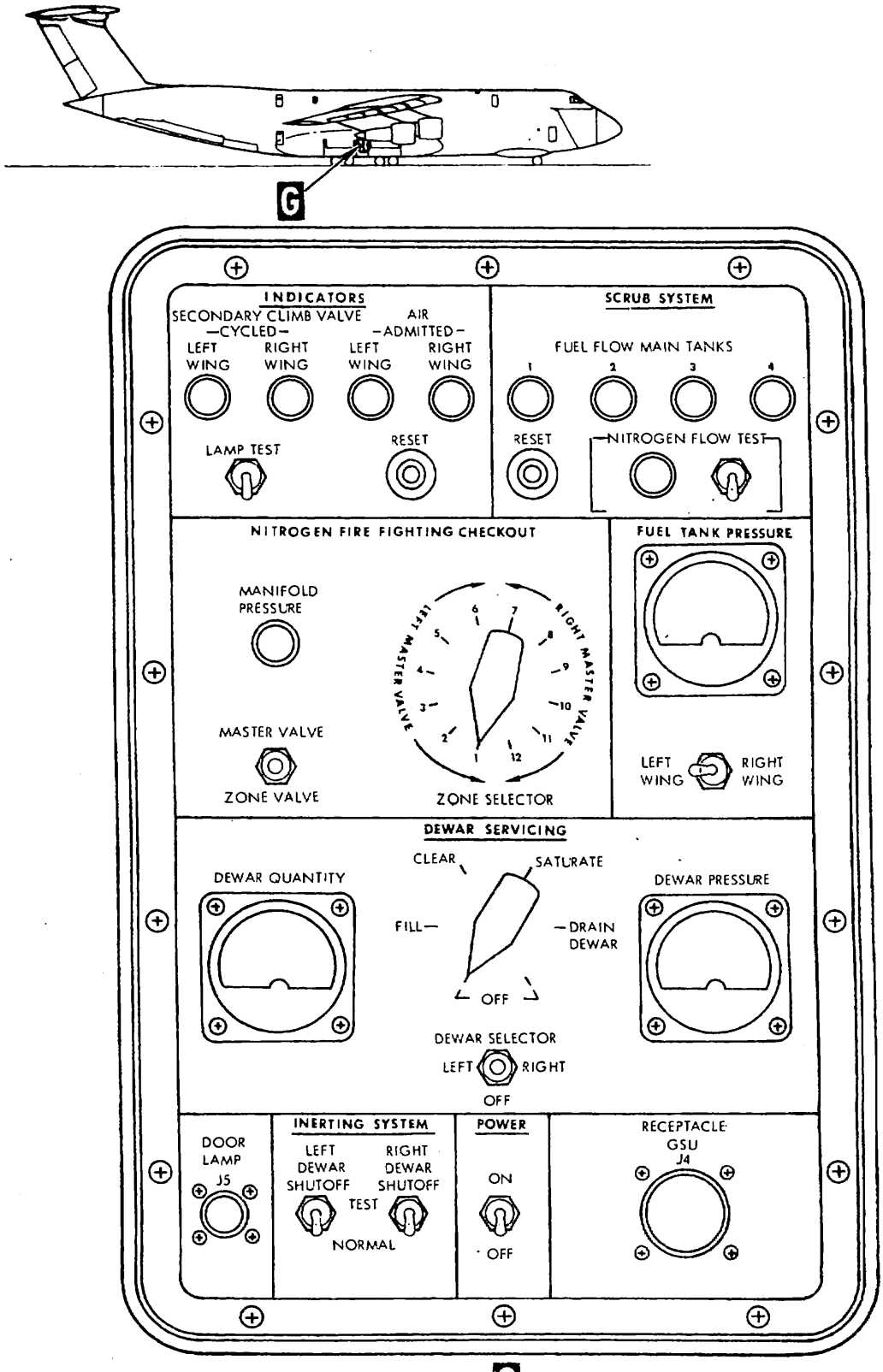

LIQUID NITROGEN SERVICE PANEL

C5A-1-X4/1-211-3

Figure 1-56B. (Sheet 3 of 3)

NITROGEN FIRE SUPPRESSION ZONES

(ON AIRPLANES MODIFIED BY T.O. 1387)

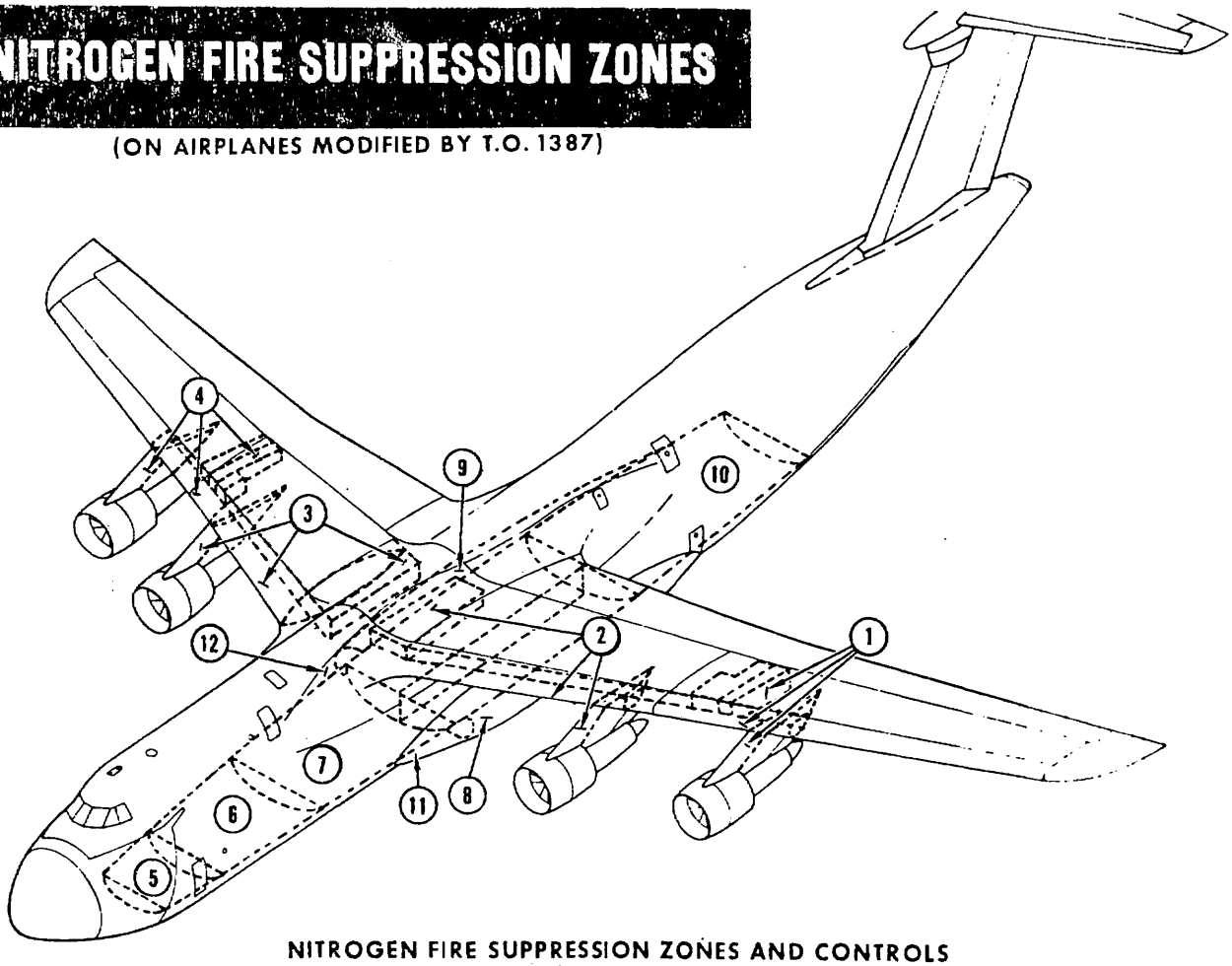

NITROGEN FIRE SUPPRESSION ZONES AND CONTROLS

(ON AIRPLANES MODIFIED BY T.O. 1387)

ZONE	SPACES INCLUDED IN ZONE	FLIGHT ENGINEER'S PANEL DISCHARGE PUSHBUTTON	NOSE WHEEL WELL PANEL DISCHARGE PUSH BUTTON
1	LEFT WING DRY BAY, LEFT OUTBOARD LEADING EDGE, LEFT OUTBOARD PYLON LEADING EDGE	LEFT OUTBD WING	LEFT WING
2	LEFT WING ROOT DRY BAY, LEFT INBOARD LEADING EDGE, LEFT INBOARD PYLON LEADING EDGE	LEFT INBD WING	
3	RIGHT WING ROOT DRY BAY, RIGHT INBOARD LEADING EDGE, RIGHT INBOARD PYLON LEADING EDGE	RIGHT INBD WING	RIGHT WING
4	RIGHT WING DRY BAY, RIGHT OUTBOARD LEADING EDGE, RIGHT OUTBOARD PYLON LEADING EDGE	RIGHT OUTBD WING	
5	NOSE WHEEL WELL	NOSE WHEEL WELL	-
6	CARGO UNDERFLOOR, FORWARD	UNDERFLOOR FWD	UNDERFLOOR FWD
7	CARGO UNDERFLOOR, MID	UNDERFLOOR MID	
8	LEFT MAIN WHEEL WELL	LEFT MAIN WHEEL WELL	-
9	RIGHT MAIN WHEEL WELL	RIGHT MAIN WHEEL WELL	-
10	CARGO UNDERFLOOR, AFT	UNDERFLOOR AFT	UNDERFLOOR AFT
11	LEFT PTU COMPARTMENT	LEFT PTU	UNDERFLOOR FWD
12	RIGHT PTU COMPARTMENT	RIGHT PTU	

C5A-1-X4/1-212

Figure 1-56C.

ELECTRICAL SYSTEM COMPONENT LOCATION DIAGRAM

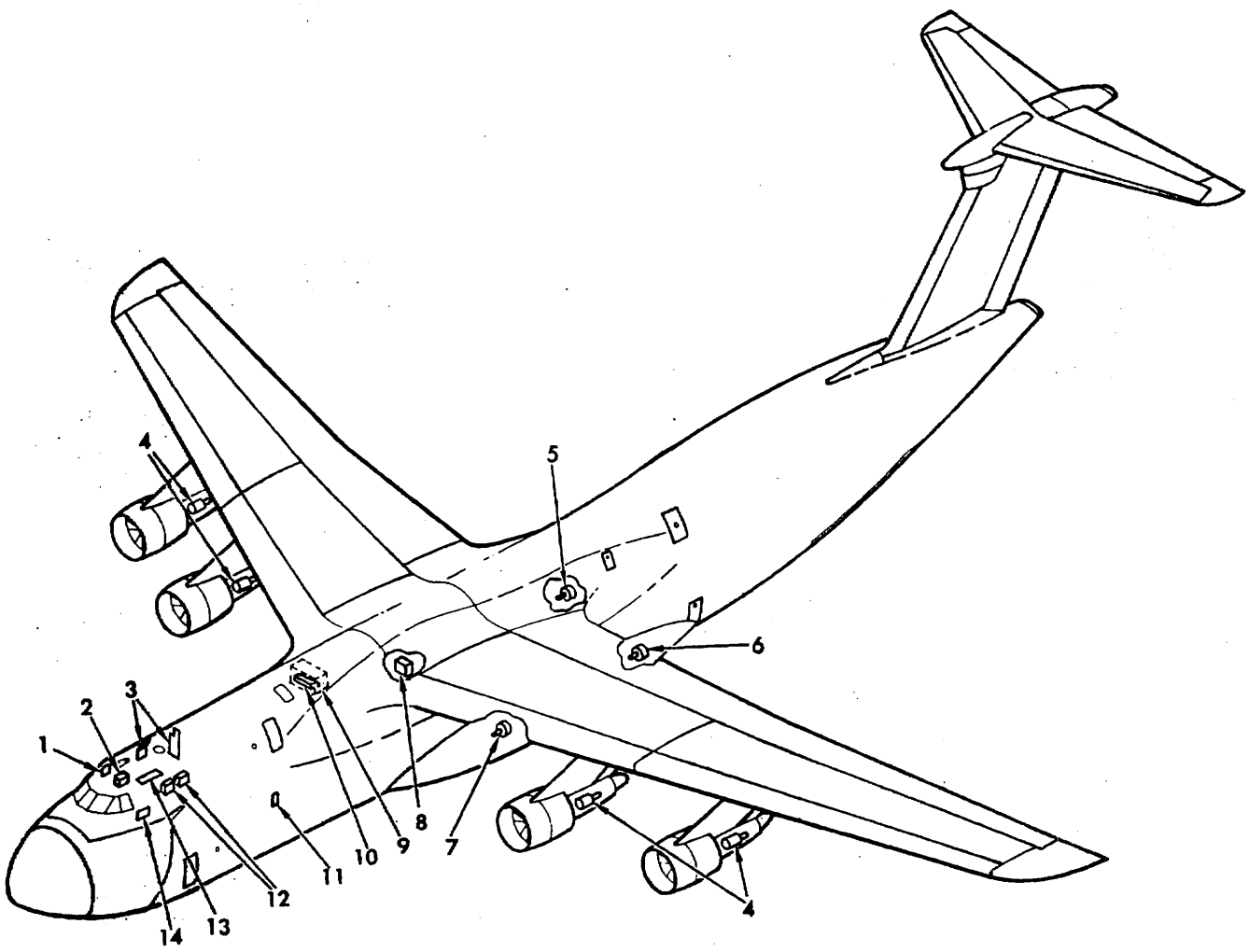

1. ELECTRICAL CONTROL PANEL
2. DC LOAD CENTER
3. FLIGHT ENGINEER'S CIRCUIT BREAKER PANELS
4. ENGINE DRIVEN GENERATORS AND CSD UNITS
5. RIGHT APU GENERATOR
6. LEFT APU GENERATOR
7. EMERGENCY GENERATOR (NO. 2 HYDRAULIC SERVICE CENTER)
8. ELECTRICAL EQUIPMENT RACK
9. AC LOAD CENTER
10. GENERATOR CONTROL UNITS
11. EXTERNAL POWER RECEPTACLE (LOWER RIGHT SIDE OF FUSELAGE)
12. BATTERIES (INSIDE CARGO COMPARTMENT, RIGHT SIDE)
13. NAVIGATORS CIRCUIT BREAKER PANEL
14. PILOT'S EMERGENCY CIRCUIT BREAKER PANEL

C5A-1-X1/0-155

Figure 1-57.

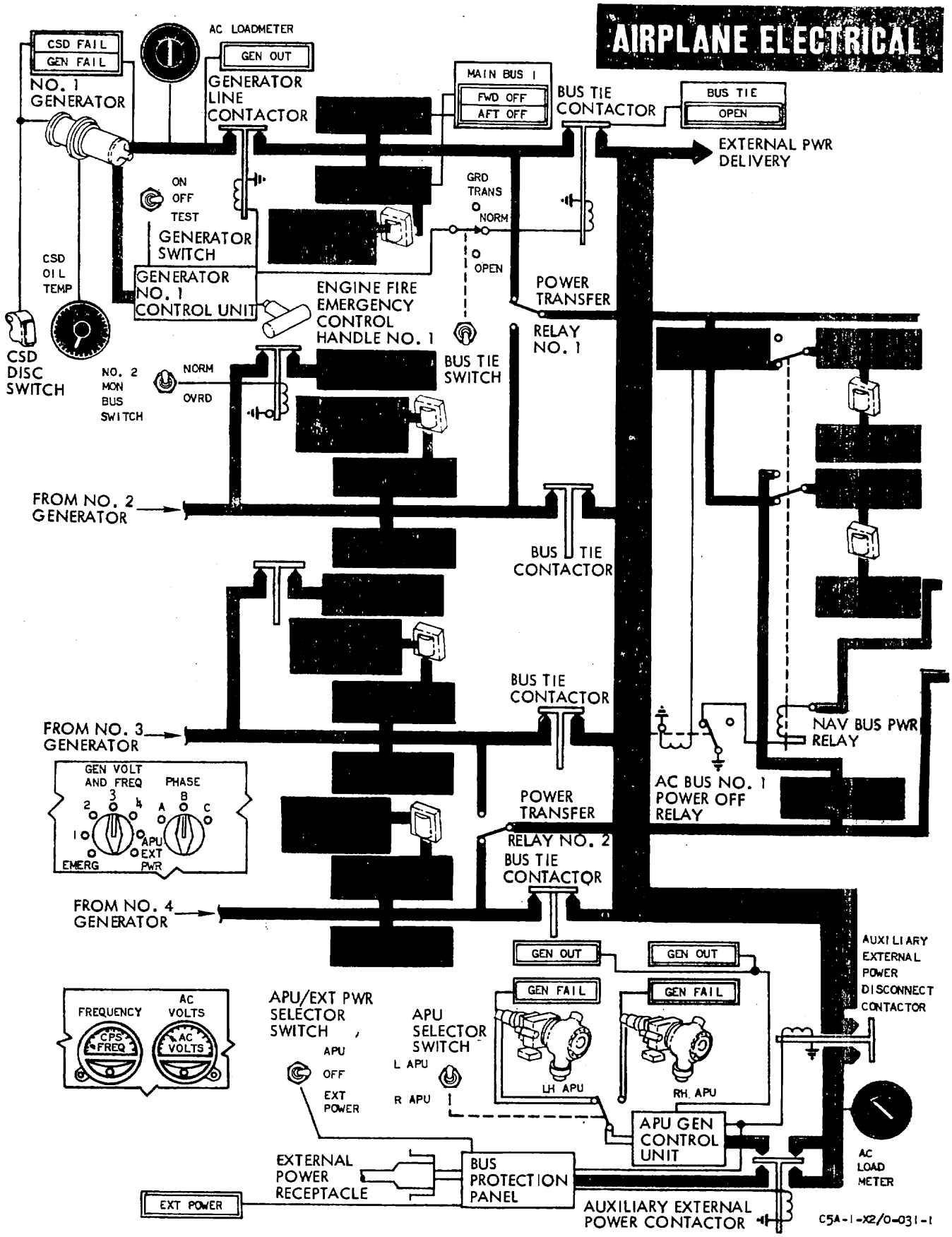

Figure 1-58. (Sheet 1 of 2)

SYSTEM

NOTE

1. "FPS" ON 80217 AND 00459 MODIFIED BY T.O. 1387. "FSS" ALL OTHER AIRPLANES MODIFIED BY T.O. 1387.
2. ON AIRPLANES MODIFIED BY T.O. 1387.
3. INOPERATIVE ON 80217 MODIFIED BY T.O. 1387. NOT INSTALLED ON ALL OTHER AIRPLANES MODIFIED BY T.O. 1387.
4. FPS FIRE SUPPRESSION CIRCUIT BREAKER INSTALLED ON AIRPLANES MODIFIED BY T.O.1387.

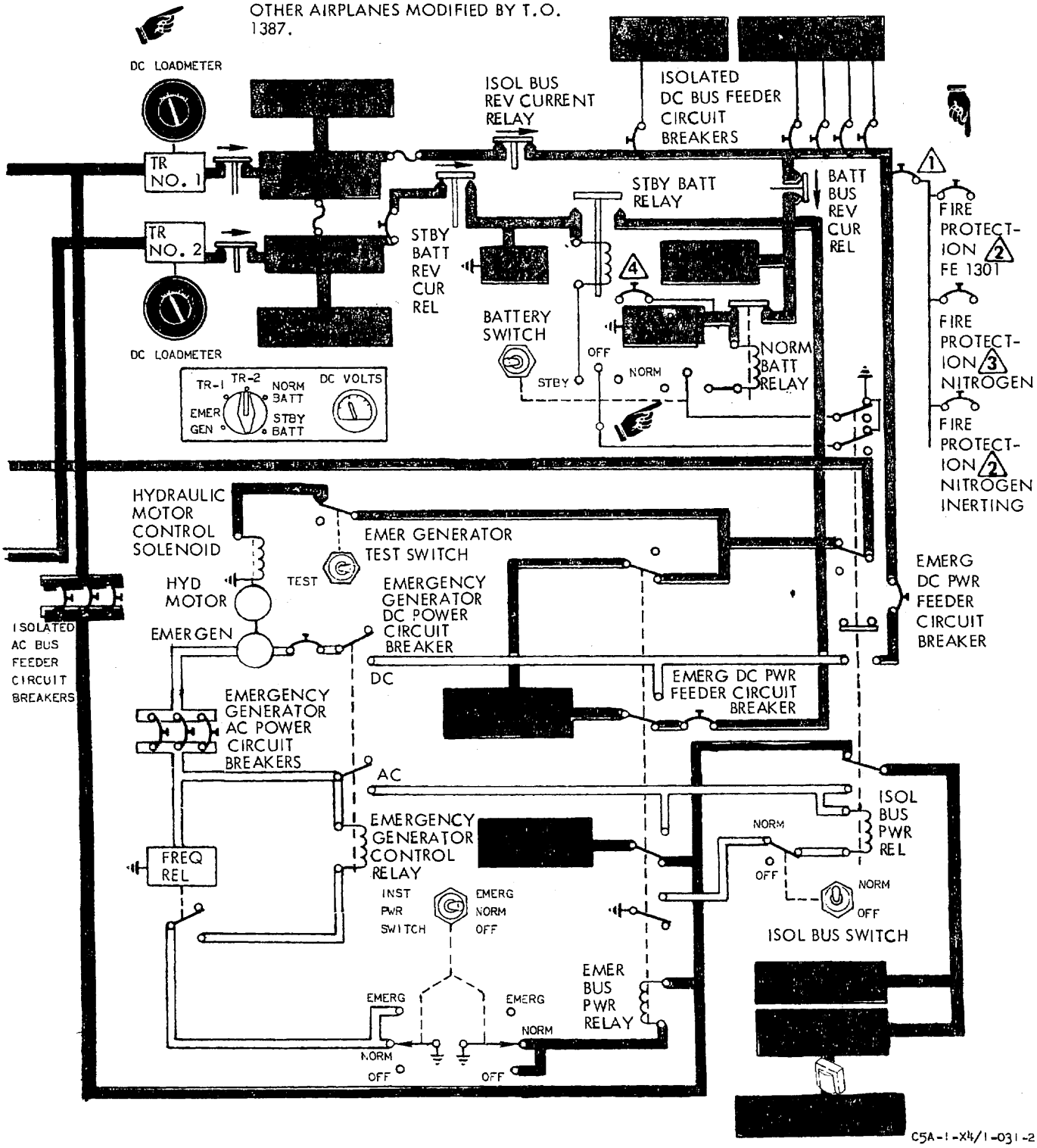

Figure 1-58. (Sheet 2 of 2)

AC POWER DISTRIBUTION

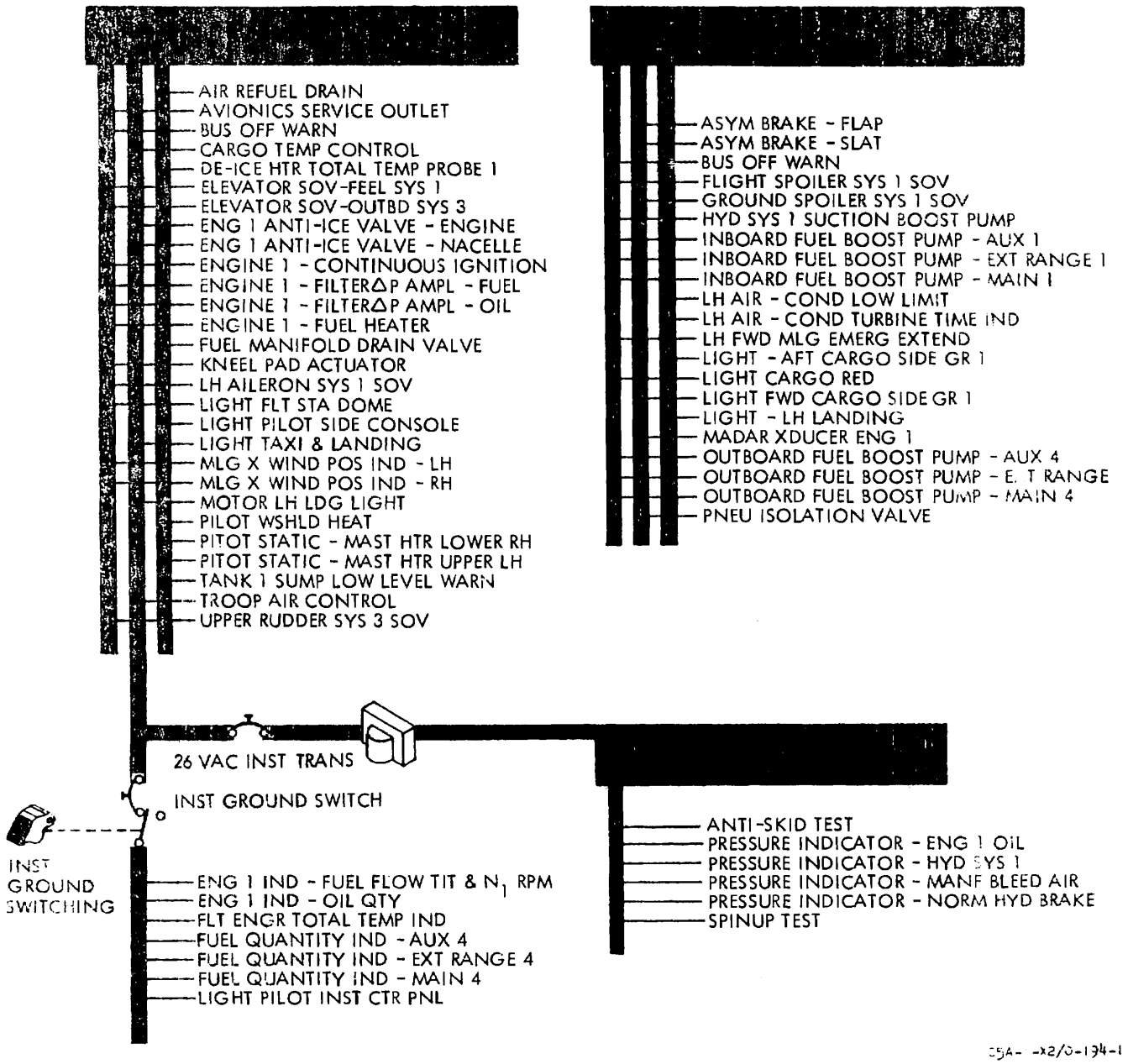

Figure 1-59. (Sheet 1 of 8)

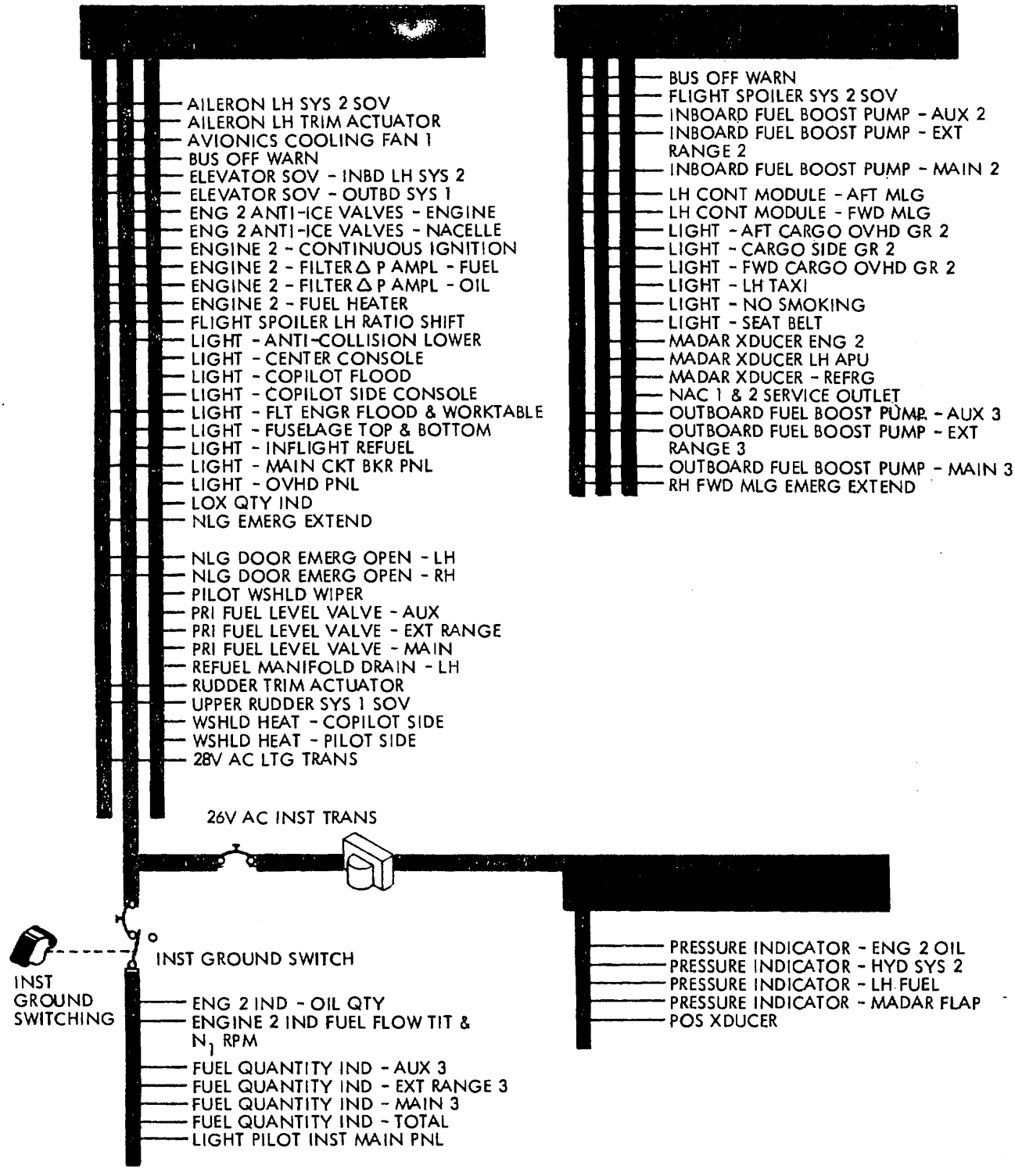

C5A-1-X4/0-194-2

Figure 1-59. (Sheet 2 of 8)

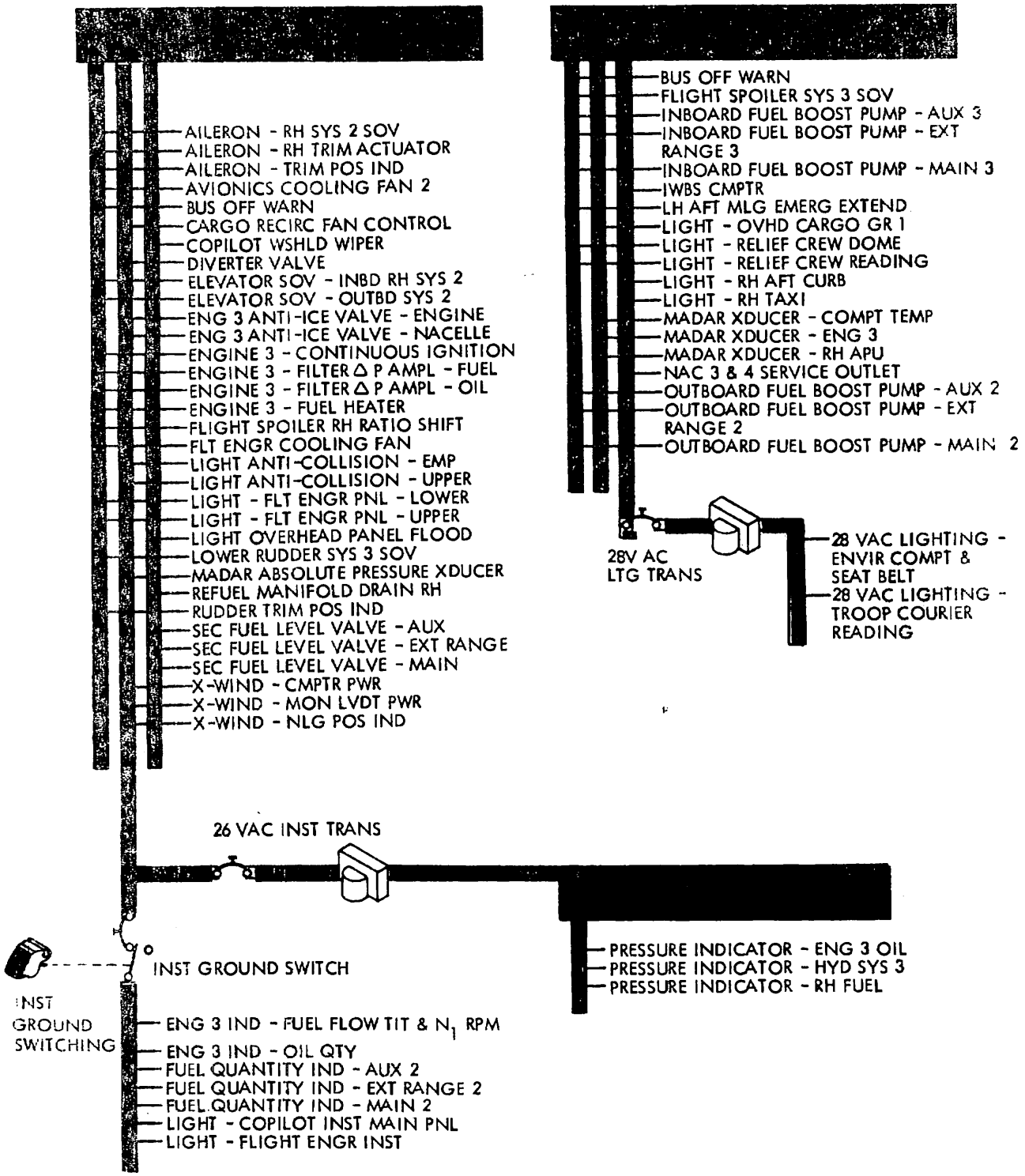

Figure 1-59. (Sheet 3 of 8)

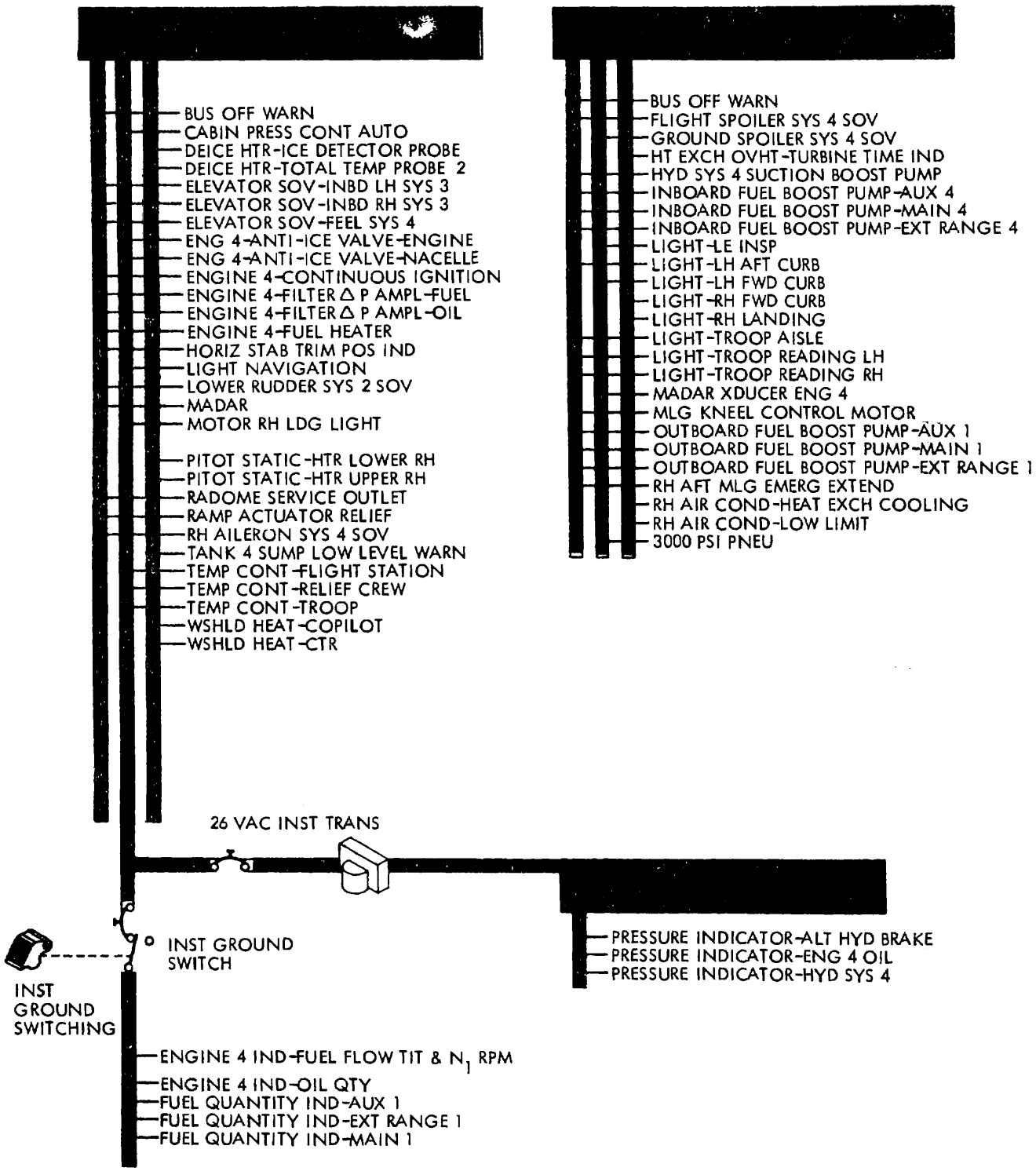

Figure 1-59. (Sheet 4 of 8)

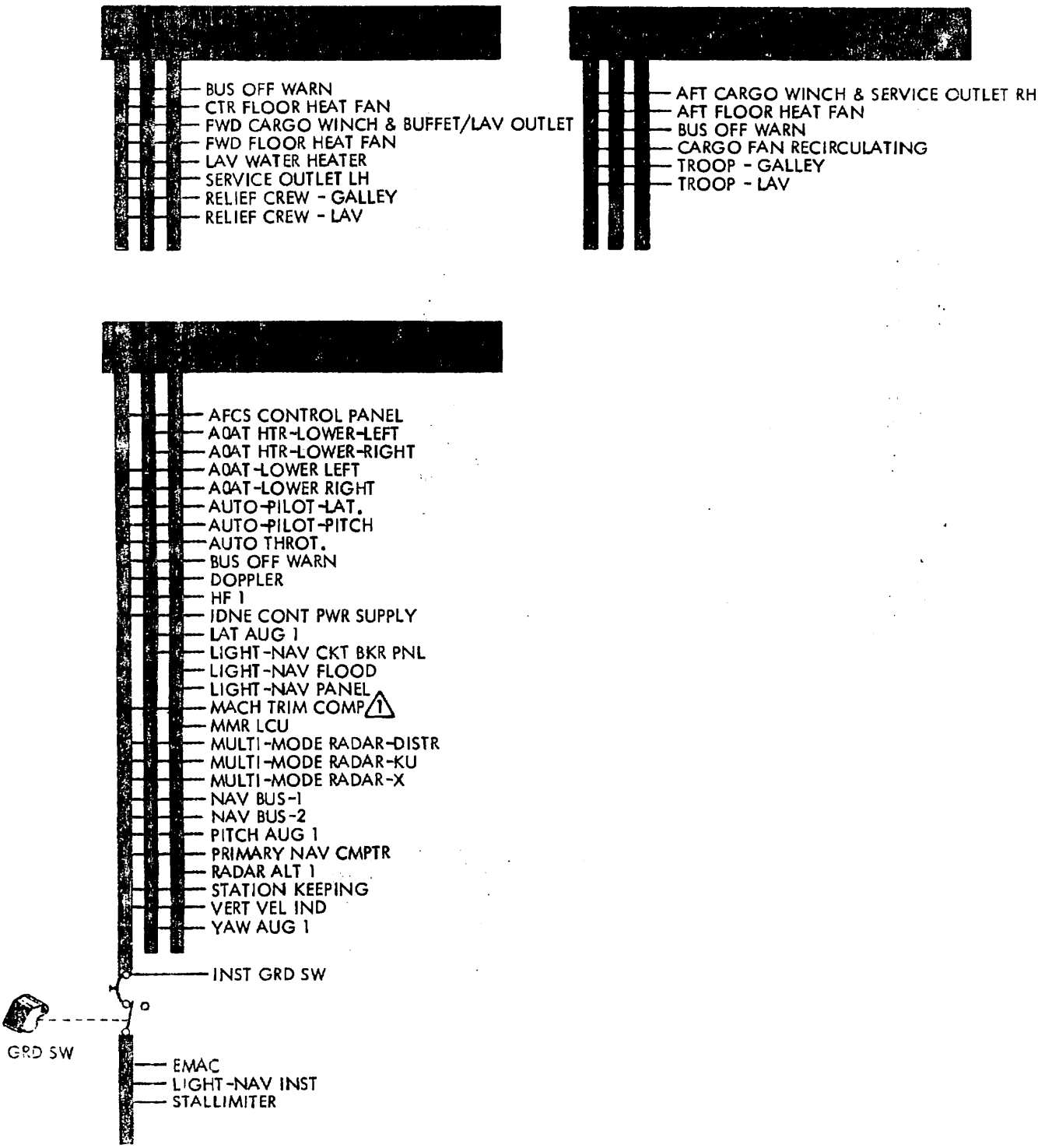

Figure 1-59. (Sheet 5 of 8)

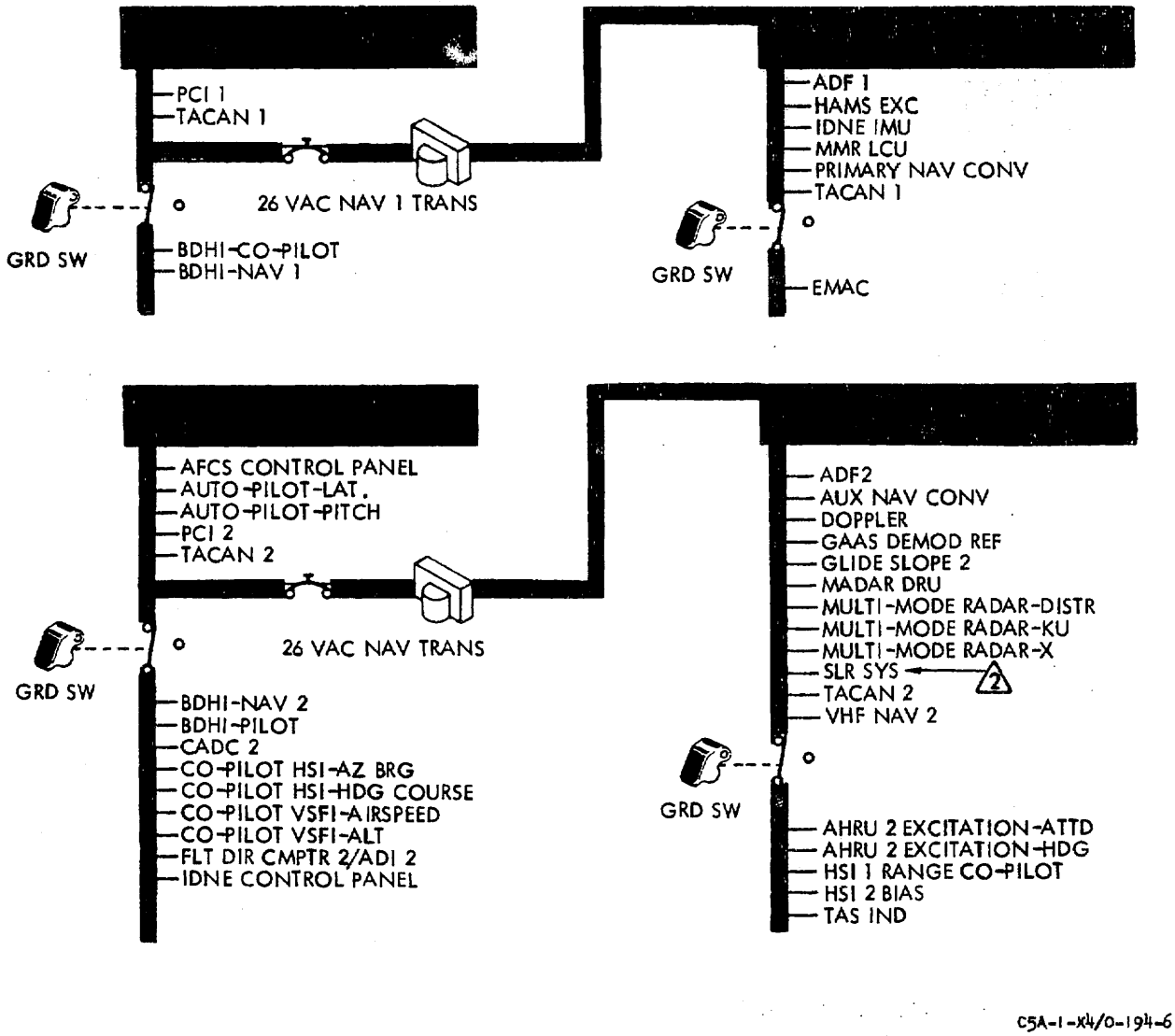

Figure 1-59. (Sheet 6 of 8)

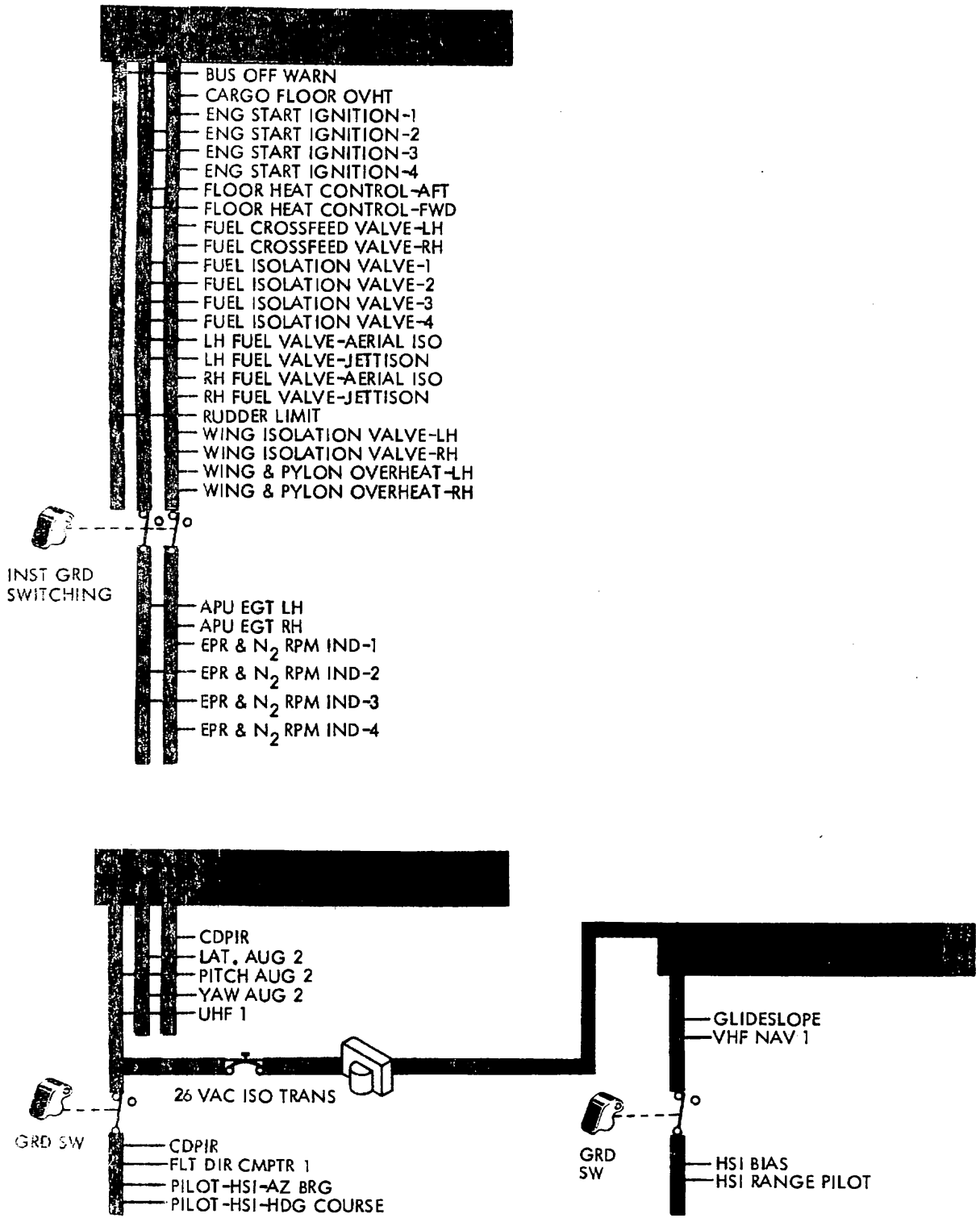

C5A-1-X4/0-194-7

Figure 1-59. (Sheet 7 of 8)

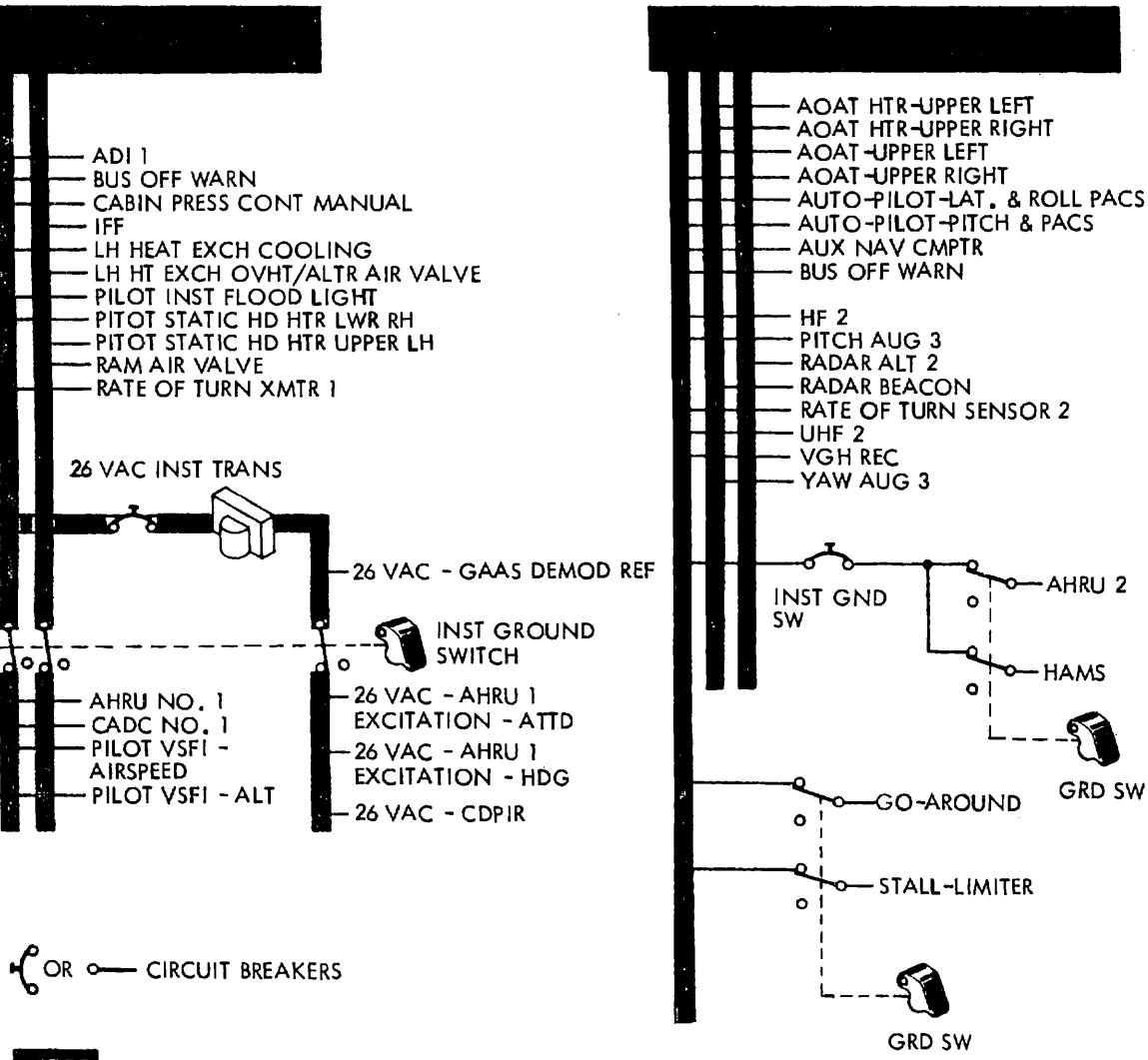

NOTE

1. INOPERATIVE ON 68307, 70167, 70168 AND 80212 THROUGH 90027, AND ON 70170 THROUGH 80211 MODIFIED BY T.O. 1091. REMOVED ON 00445 AND UP.

2. ON 80211 THROUGH 00467 MODIFIED BY T.O. 1377.

C5A-1-X4/0-194-8

Figure 1-59. (Sheet 8 of 8)

DC POWER DISTRIBUTION

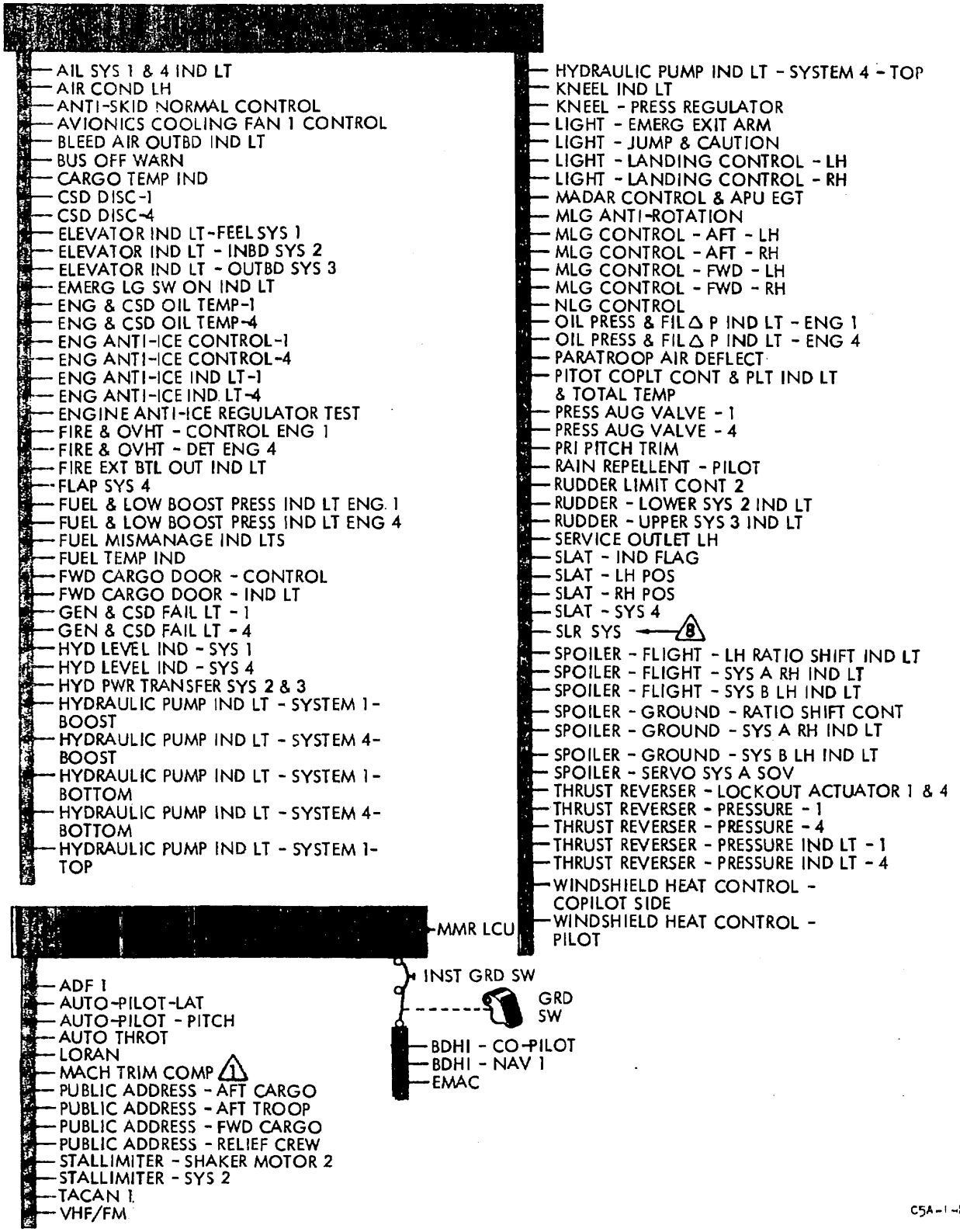

Figure 1-60. (Sheet 1 of 4)

C5A-1-X4/0-195-2

Figure 1-60. (Sheet 2 of 4)

Figure 1-60. (Sheet 3 of 4)

[redacted]

- GLIDE SLOPE 1
- IFF TEST
- UHF 1
- VHF COMM 1
- VHF NAV 1
- GRD SW
- AHRU 1 GYRO VALID
- CDPIR
- FLT DIR CMPTR 1
- NAV SEL PILOT

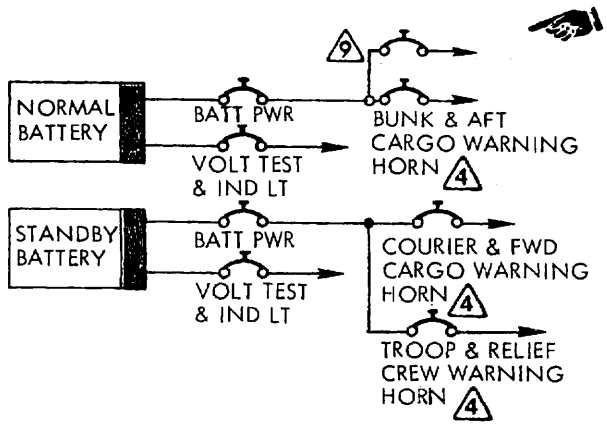

[redacted]

- APU CONTROL - LH
- APU CONTROL - RH
- APU GEN FAIL LT
- APU IND LT - LH
- APU IND LT - RH
- BUS TIE CONT - 1
- BUS TIE CONT - 2
- BUS TIE CONT - 3
- BUS TIE CONT - 4
- EMERG AC & DC BUS OFF IND LT
- EMERG EXIT LIGHT DISARM
- ENGINE FIRE EXTINGUISHER - APU
- ENGINE FIRE EXTINGUISHER - 1
- ENGINE FIRE EXTINGUISHER - 2
- ENGINE FIRE EXTINGUISHER - 3
- ENGINE FIRE EXTINGUISHER - 4
- FUEL SEPARATION VALVE - CENTER
- FUEL SEPARATION VALVE - LH
- FUEL SEPARATION VALVE - RH
- GRD REFUEL ISO VALVE - LH
- GRD REFUEL ISO VALVE - RH
- HYD ATM SYS 1 - CONT & IND LTS
- HYD ATM SYS 1 - PNEU & HYD SOV
- HYD ATM SYS 1 - SUCTION SOV
- HYD ATM SYS 4 - SUCT SOV
- HYD PWR TRANSFER SYS 1 & 2
- MONITOR BUS TIE CONT 2
- MONITOR BUS TIE CONT 3
- RAM AIR TURBINE - AUTO CONT
- RAM AIR TURBINE - MANUAL CONT & IND LT
- SYNC BUS RELAY

[redacted]

- BUS OFF WARN
- EMERG DEPRESS
- EMERG GEN VOLT
- EMERG PWR CONT
- IFF
- ISO BUS OFF IND LT
- LH AIR COND - FLOW CONT
- LH AIR COND - HEAT EXCH COOLING
- PILOT, PITOT & ANGLE OF ATTACK WARN LT
- PLT/FE INTERPHONE
- WARN HORN - BUNK & AFT CARGO
- WARN HORN - COURIER & FWD CARGO
- WARN HORN - TROOP & RELIEF CREW

NOTE

OR — CIRCUIT BREAKERS

1. REMOVED ON 00445 AND UP.
2. ON 80211 AND UP.
3. ON 68307, 70167, 70168, AND 70170 THROUGH 70174.
4. ON 00461 AND UP AND AIRPLANES MODIFIED BY T.O. 1306.
5. ON 00461 AND UP AND AIRPLANES MODIFIED BY T.O. 1345.
6. "MLG KNEEL CONTROL" REMOVED ON 00461 AND UP AND AIRPLANES MODIFIED BY T.O. 1345.
7. DELETED ON AIRPLANES MODIFIED BY T.O. 1324.
8. ON 80211 THROUGH 00467 MODIFIED BY T.O. 1377.
9. "FPS FIRE SUPPRESSION" ON 80217 AND 00459 MODIFIED BY T.O. 1387.
   "FSS FIRE SUPPRESSION" ON ALL OTHER AIRPLANES MODIFIED BY T.O. 1387.

C5A-1-X4/1-195-4

Figure 1-60. (Sheet 4 of 4)

PILOT'S EMERGENCY CIRCUIT BREAKER PANEL

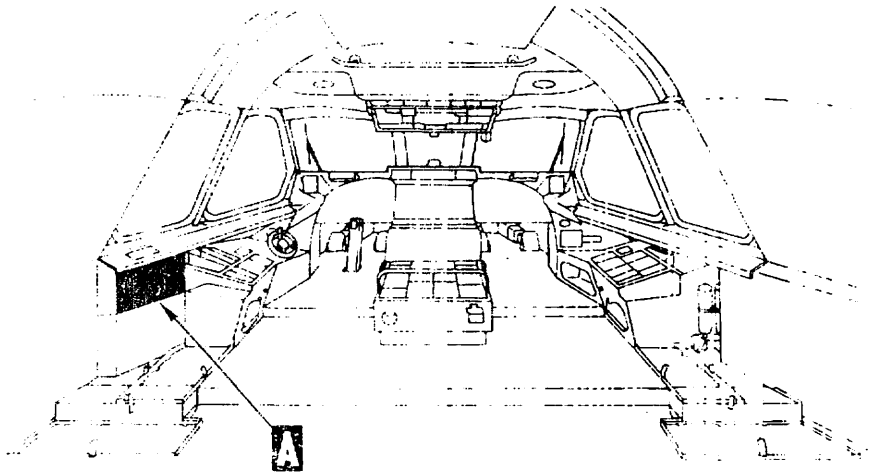

NOTE

THE CIRCUIT BREAKERS PAINTED YELLOW ARE IDENTIFIED BY A "Y".

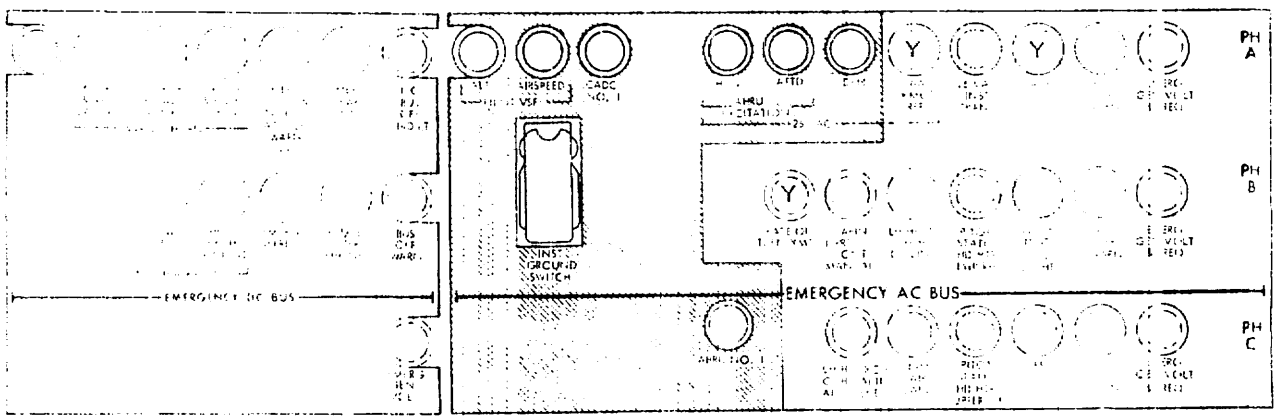

A

5A-1-X4/1-136

Figure 1-61.

FLIGHT ENGINEER'S CIRCUIT BREAKER PANEL NO. 1

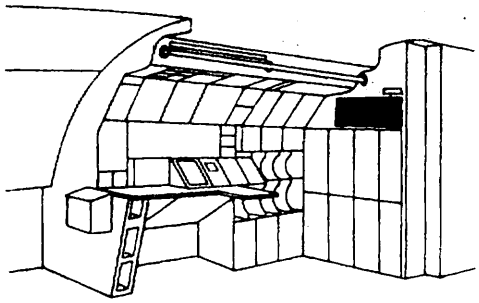

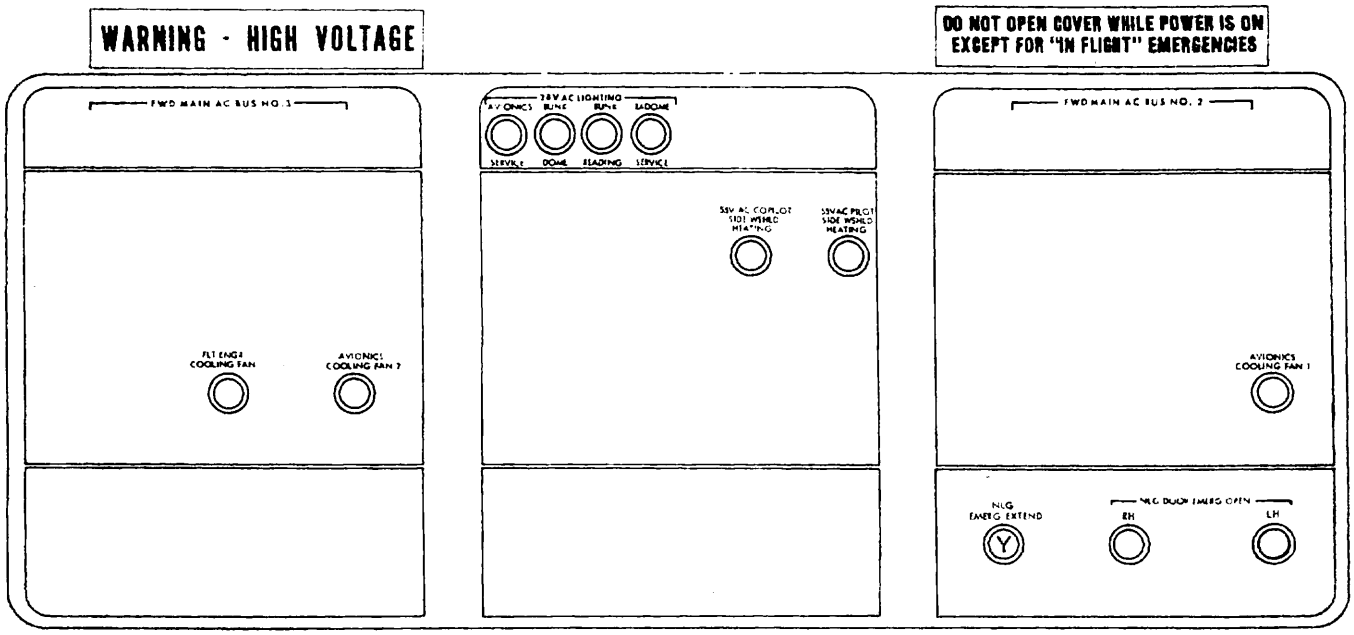

NOTE

THE CIRCUIT BREAKER PAINTED YELLOW IS IDENTIFIED BY A "Y".

C5A-1-X4/1-137

Figure 1-62.

DC LOAD CENTER CIRCUIT BREAKER PANEL

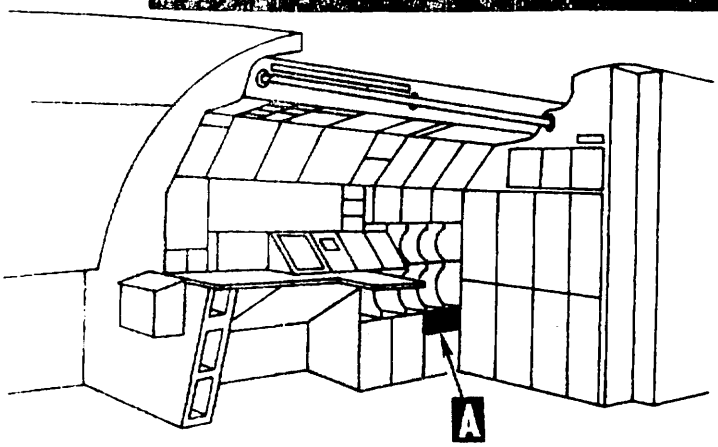

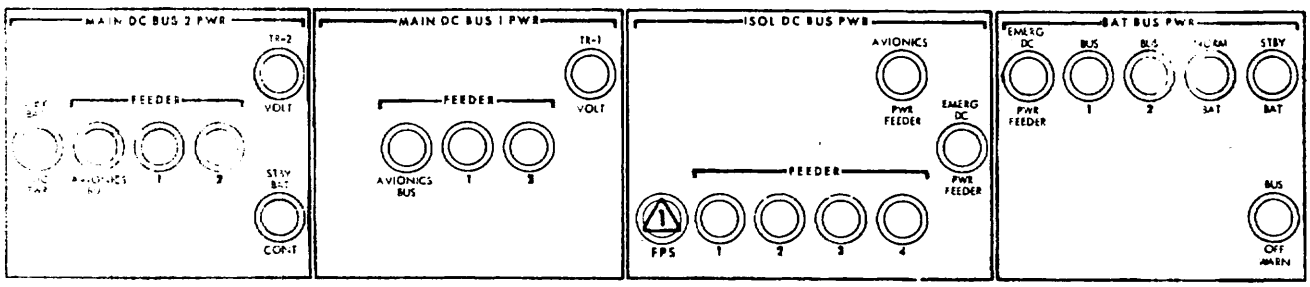

A

NOTE

1 "FPS" ON 80217 AND 00459 MODIFIED BY T.O. 1387.
"FSS" ON ALL OTHER AIRPLANES MODIFIED BY T.O. 1387.

C5A-1-X4/1-201

Figure 1-63.

FLIGHT ENGINEER'S CIRCUIT BREAKER PANEL NO. 2

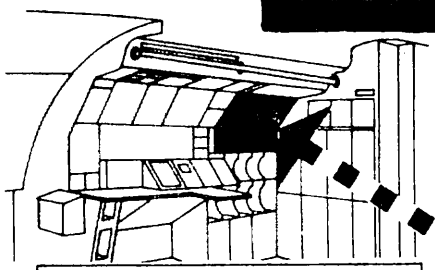

NOTE

1. ON 00453 AND UP AND AIRPLANES MODIFIED BY T.O. 1232 OR 1304.
2. ON AIRPLANES MODIFIED BY T.O. 1387.
3. NOT PRESENTLY UTILIZED.
4. THE CIRCUIT BREAKERS PAINTED YELLOW ARE IDENTIFIED BY A "Y." THOSE PAINTED RED ARE IDENTIFIED BY AN "R."

DO NOT OPEN COVER WHILE POWER IS ON EXCEPT FOR "IN FLIGHT" EMERGENCIES

WARNING - HIGH VOLTAGE

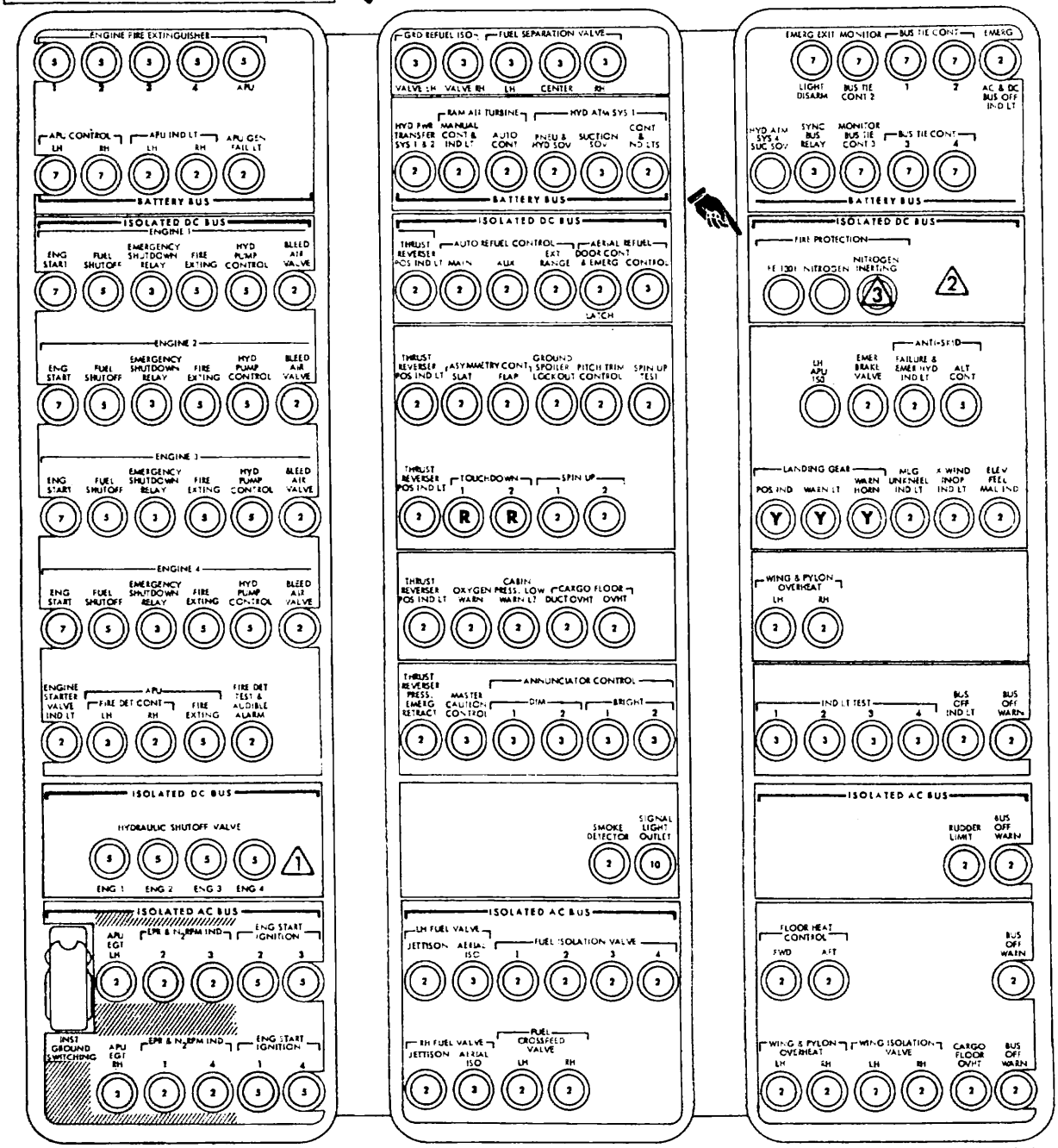

C5A-1-X4/1-138

Figure 1-64.

FLIGHT ENGINEER'S CIRCUIT BREAKER PANEL NO. 3

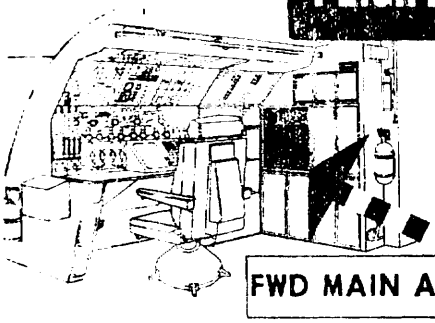

NOTE

THE CIRCUIT BREAKERS PAINTED YELLOW ARE IDENTIFIED BY A "Y".

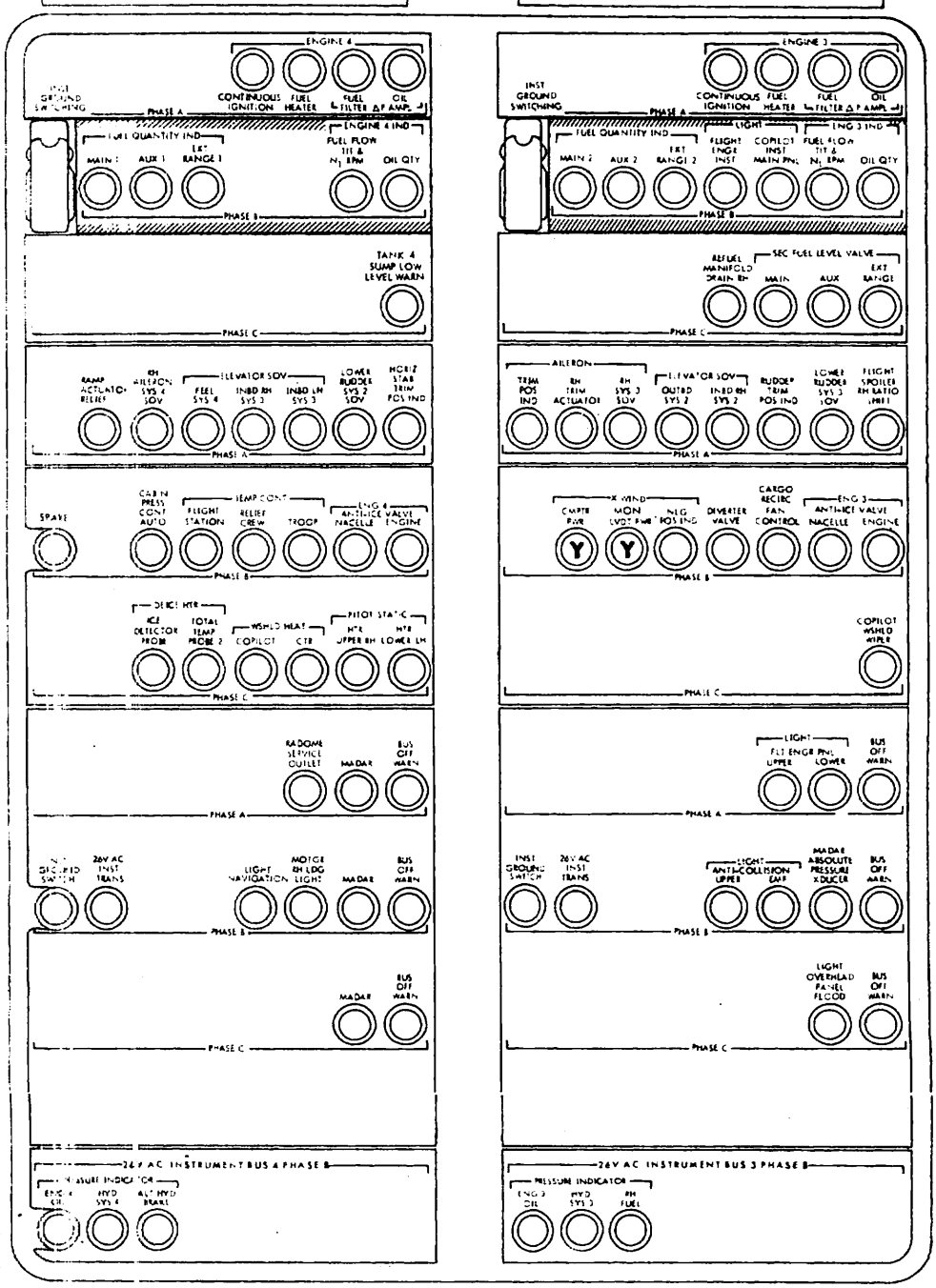

Figure 1-65.

FLIGHT ENGINEER'S CIRCUIT BREAKER PANEL NO. 4

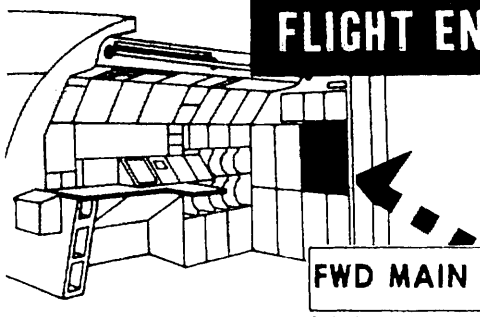

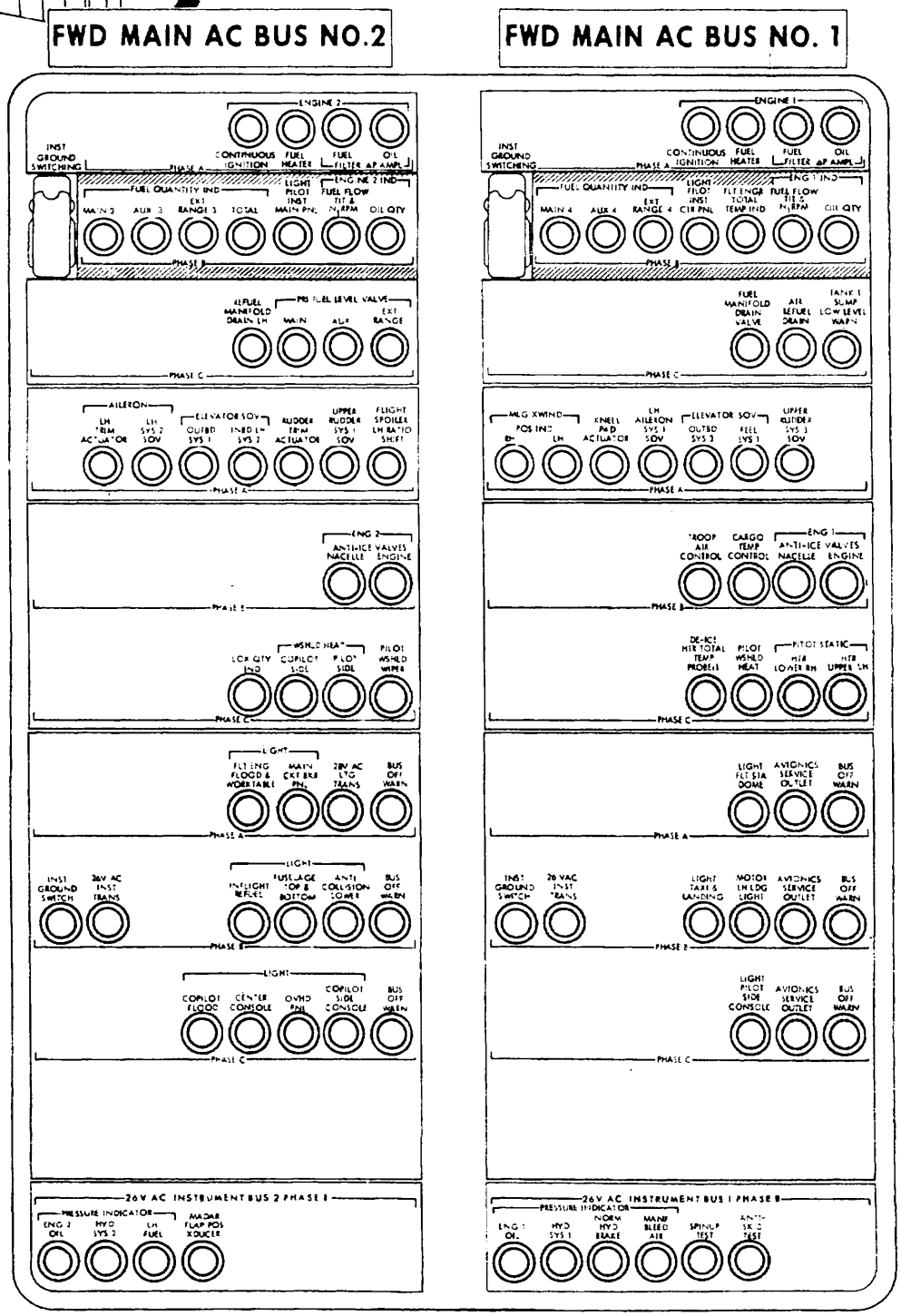

C5A-1-7-140

Figure 1-66.

FLIGHT ENGINEER'S CIRCUIT BREAKER PANEL NO. 5

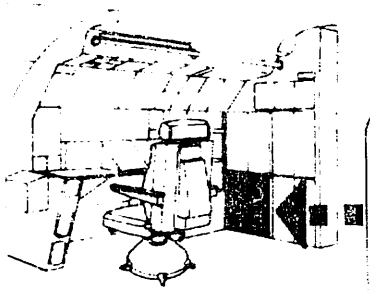

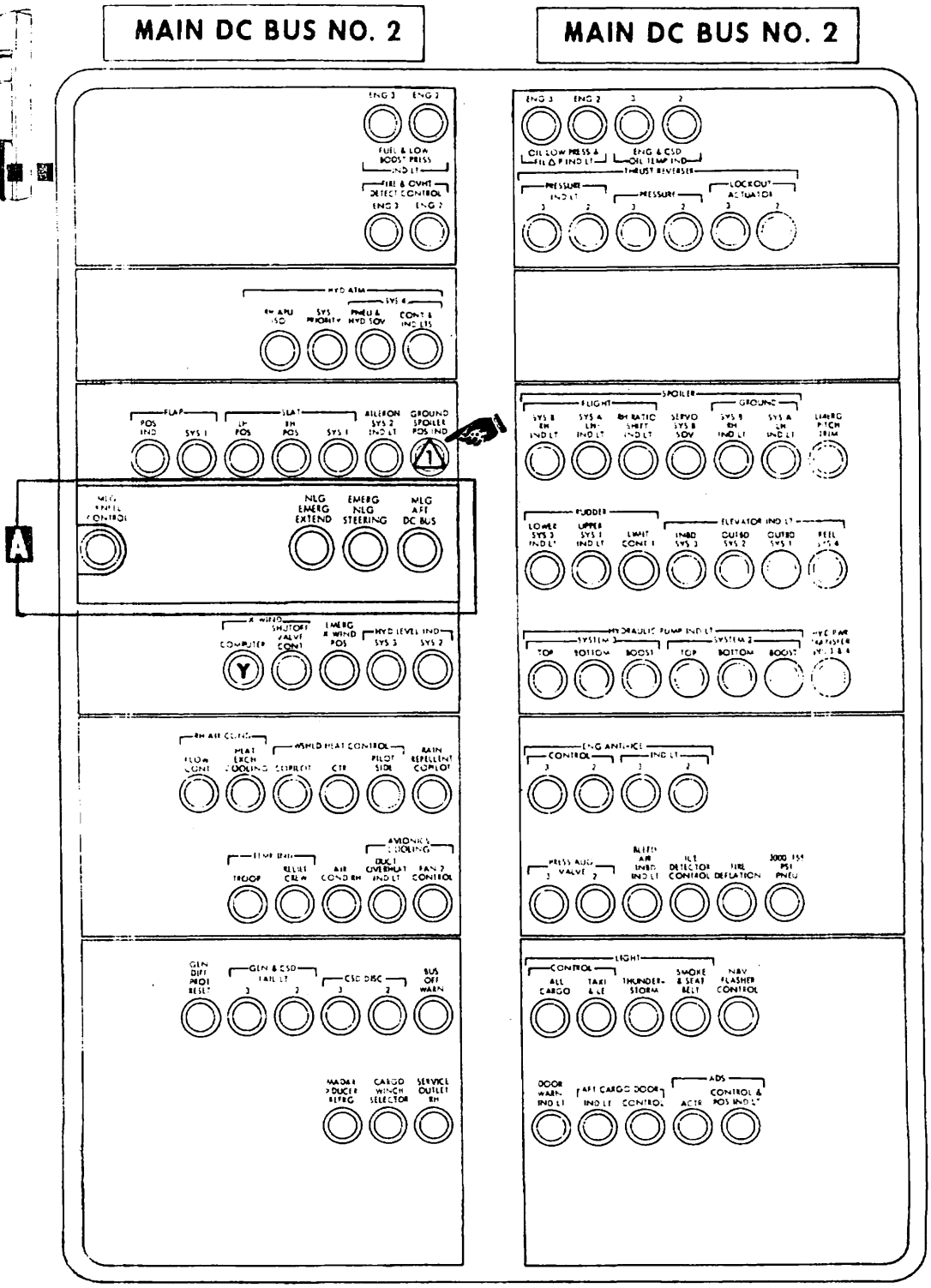

C5A-1-X4/1-141-1

Figure 1-67. (Sheet 1 of 2)

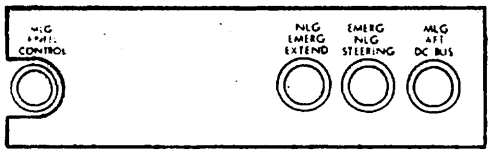

ON 00461 AND UP AND 80211 THRU 00460 MODIFIED BY T.O. 1345.

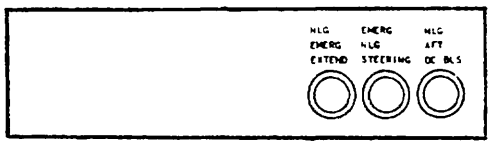

ON 80211 THRU 00460 NOT MODIFIED BY T.O. 1345.

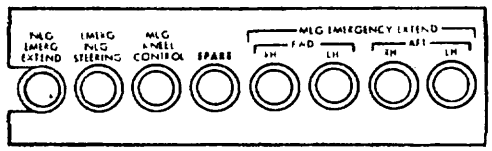

ON 68304, 68307, 70167, 70168 AND 70170 THRU 70174, MODIFIED BY T.O. 1345.

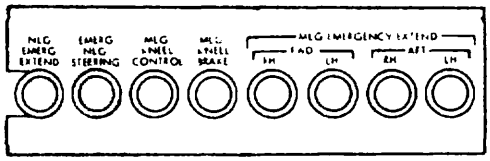

ON 68304, 68307, 70167, 70168 AND 70170 THRU 70174 NOT MODIFIED BY T.O. 1345.

A

NOTE

1. "SPARE" ON AIRPLANES MODIFIED BY T.O. 1324.
2. THE CIRCUIT BREAKERS PAINTED YELLOW ARE IDENTIFIED BY A "Y".

C5A-1-X4/1-141-2

Figure 1-67. (Sheet 2 of 2)

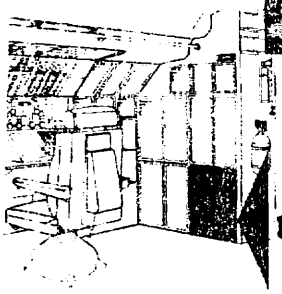

FLIGHT ENGINEER'S CIRCUIT BREAKER PANEL NO. 6

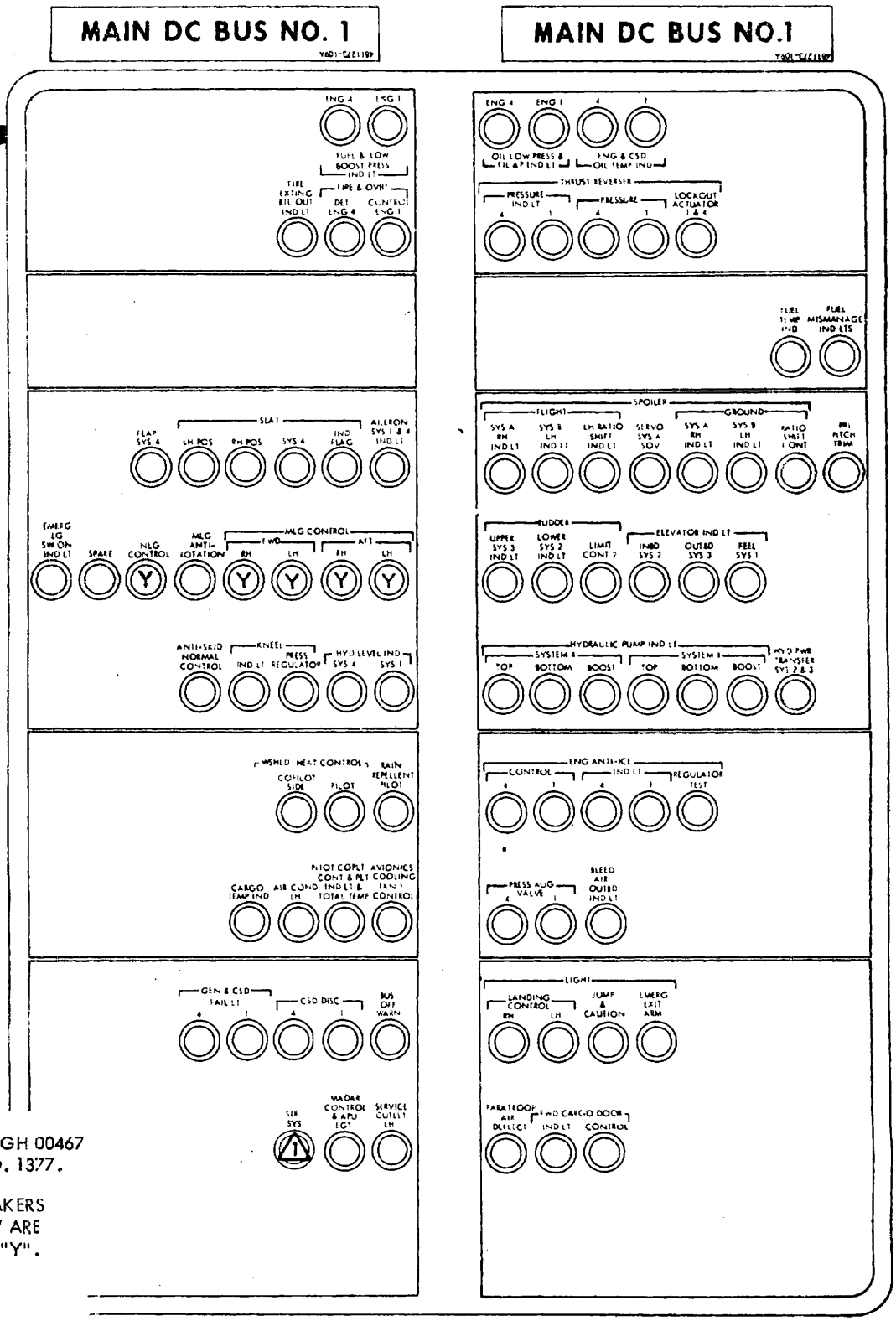

NOTE

1. ON 80211 THROUGH 00467 MODIFIED BY T.O. 1377.
2. THE CIRCUIT BREAKERS PAINTED YELLOW ARE IDENTIFIED BY A "Y".

Figure 1-68.

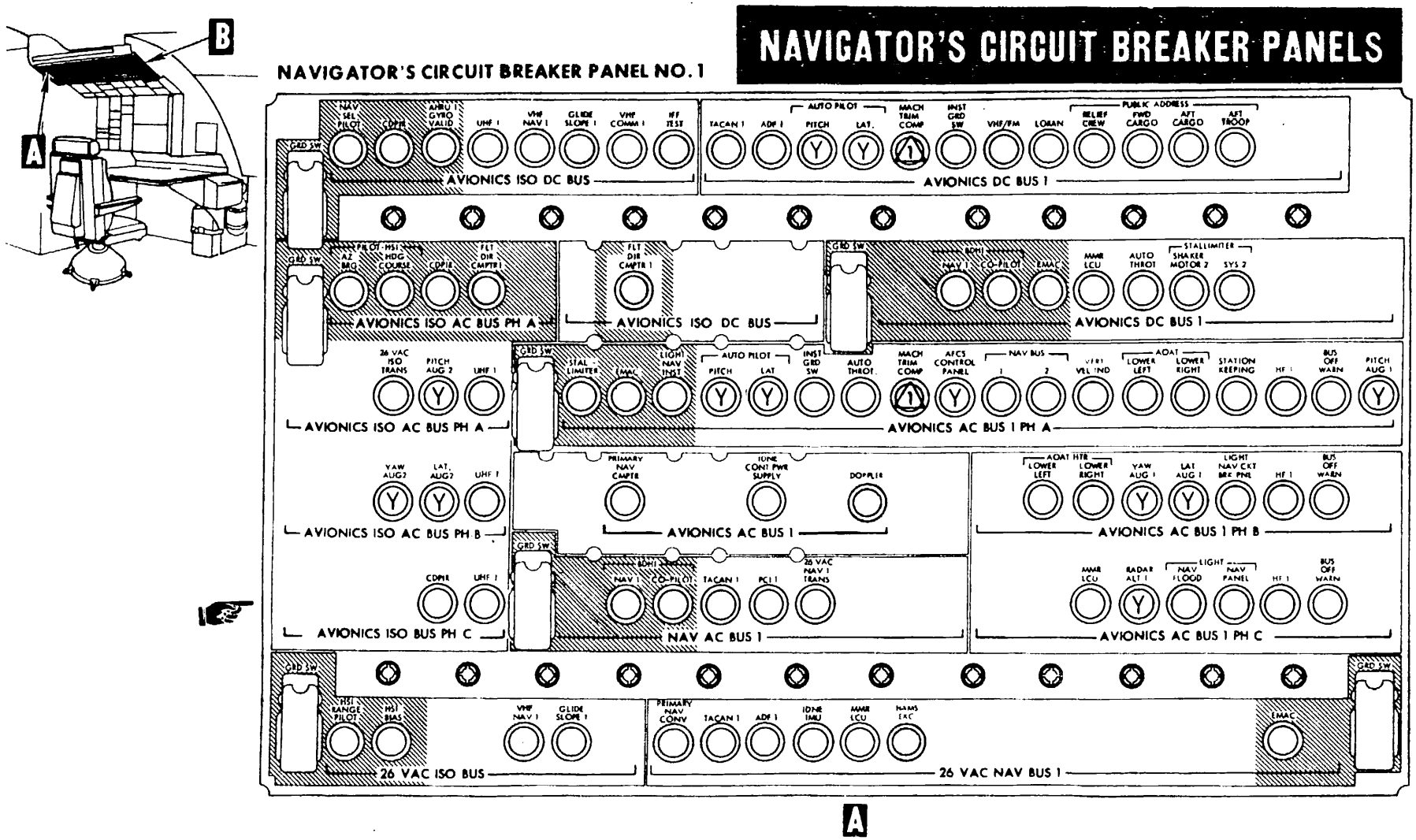

C5A-1-X4/1-143-1

Figure 1-69. (Sheet 1 of 2)

NAVIGATOR'S CIRCUIT BREAKER PANEL NO. 2

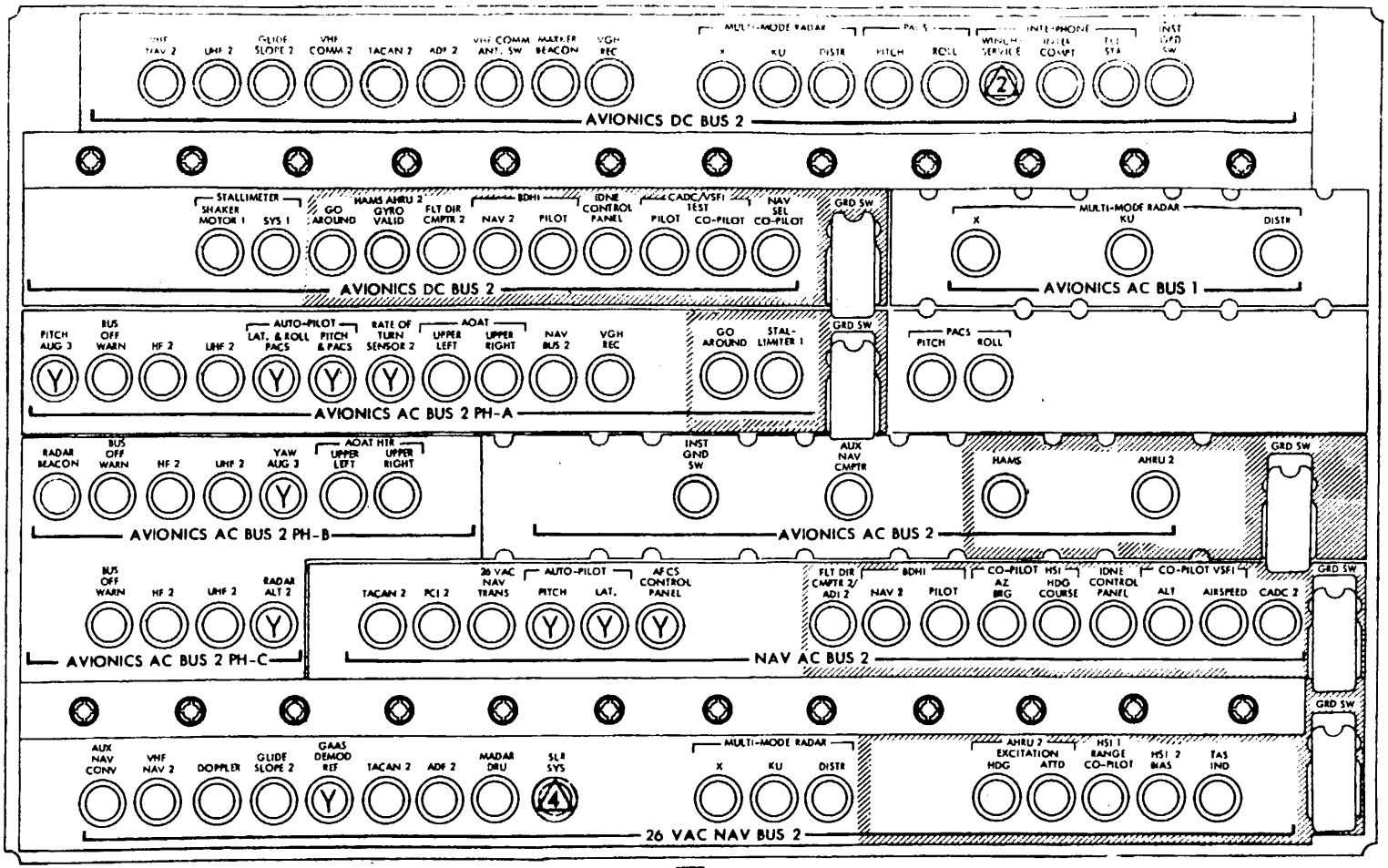

NOTE

1. INOPERATIVE ON 68307, 70167, 70168 AND 80212 THROUGH 90027, AND ON 70170 THROUGH 80211 MODIFIED BY T.O. 1091. REMOVED ON 00445 AND UP.

2. "INTERPHONE WINCH/SERVICE" ON AIRPLANES NOT MODIFIED BY T.O. 1305.

3. THE CIRCUIT BREAKERS PAINTED YELLOW ARE INDICATED BY A "Y."

4. ON 80211 THROUGH 00467 MODIFIED BY T.O. 1377.

C5A-1-X4/1-143-2

Figure 1-69. (Sheet 2 of 2)

AC LOAD CENTER CIRCUIT BREAKER PANELS

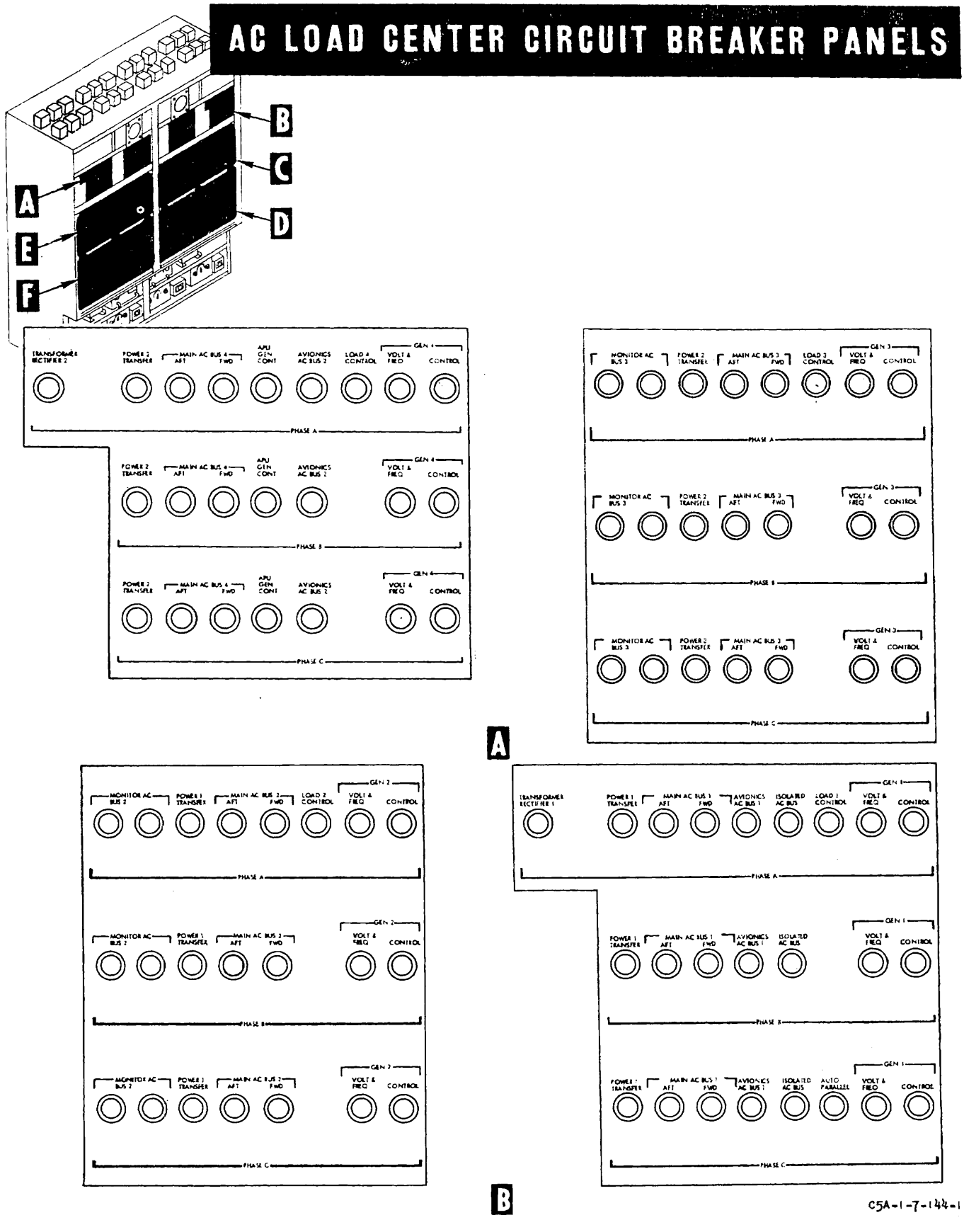

Figure 1-70. (Sheet 1 of 3)

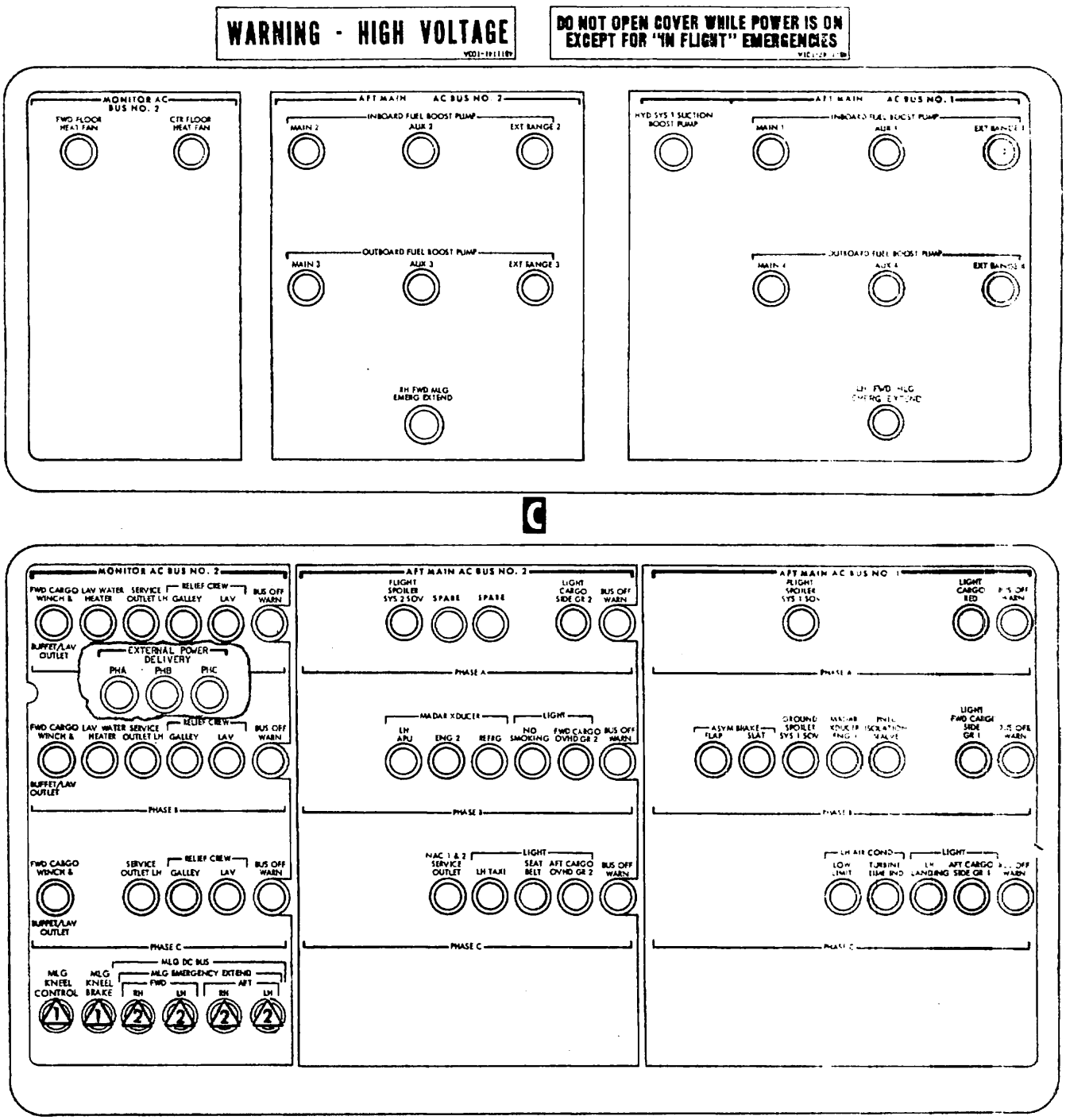

NOTE

1 ON 80211 THRU 00460 NOT MODIFIED BY T.O. 1345.

2 ON 80211 AND UP.

C5A-1-X4/0-144-2

Figure 1-70. (Sheet 2 of 3)

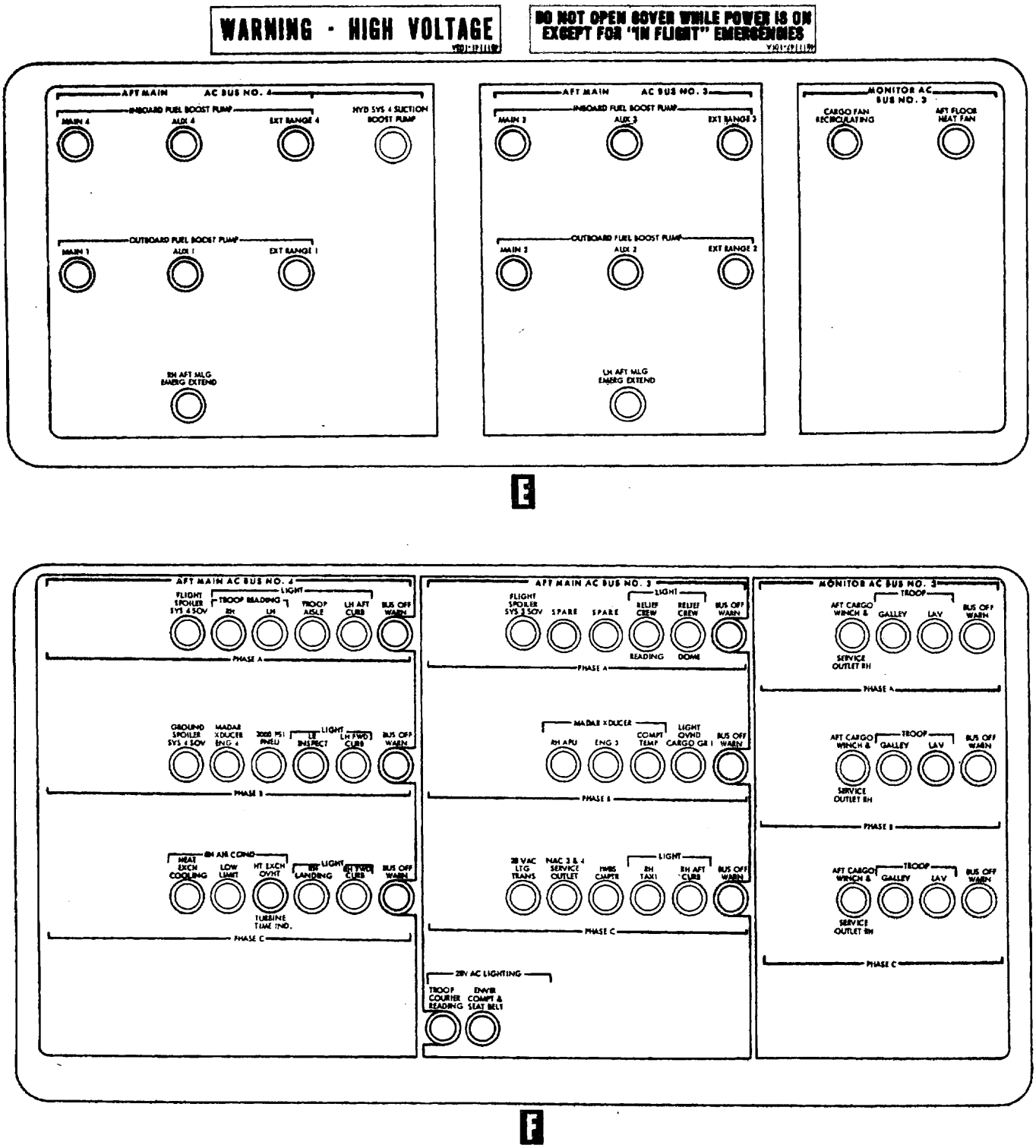

C5A-1-X4/0-144-3

Figure 1-70. (Sheet 3 of 3)

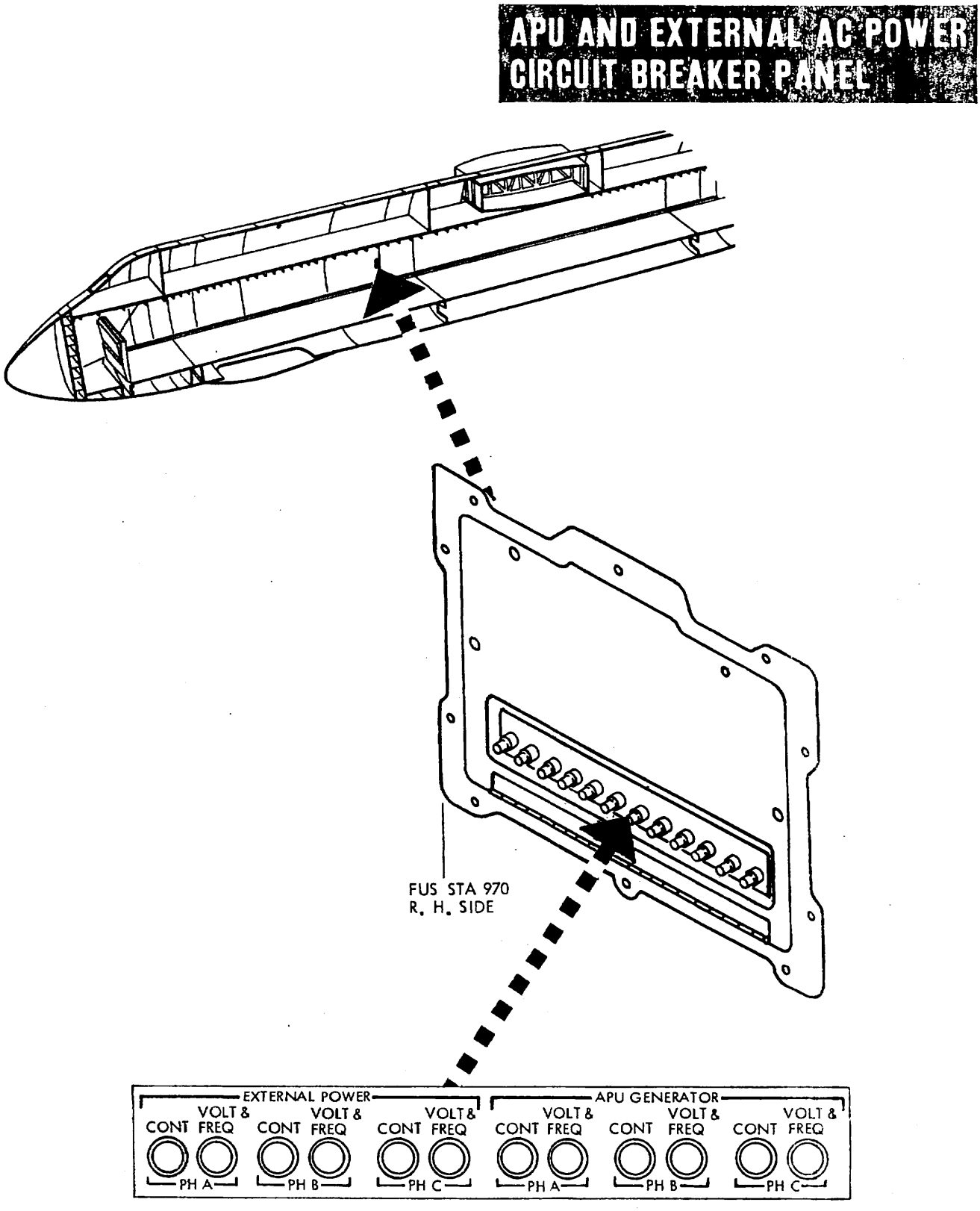

C5A-1-11/0-185

Figure 1-71.

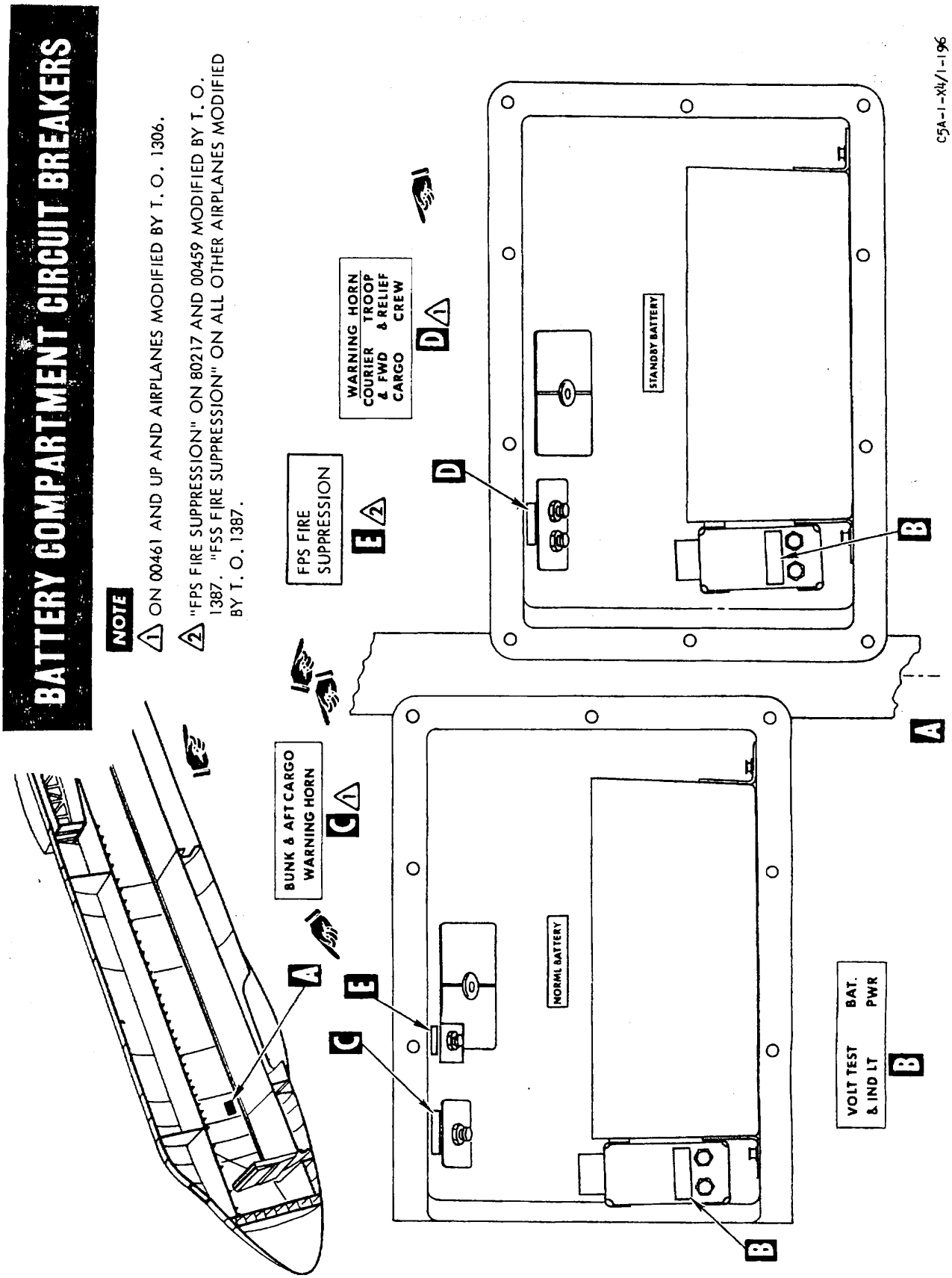
BATTERY COMPARTMENT CIRCUIT BREAKERS
NOTE
1 ON 00461 AND UP AND AIRPLANES MODIFIED BY T.O. 1306.
2 "FPS FIRE SUPPRESSION" ON 80217 AND 00459 MODIFIED BY T.O. 1387. "FSS FIRE SUPPRESSION" ON ALL OTHER AIRPLANES MODIFIED BY T.O. 1387.
C5A-1-X4/1-196
BUNK & AFT CARGO WARNING HORN
FPS FIRE SUPPRESSION
WARNING HORN COURIER & FWD CARGO TROOP & RELIEF CREW
NORML BATTERY
STANDBY BATTERY
VOLT TEST & IND LT
BAT. PWR
A
B
C
D
E

Figure 1-72.

EMERGENCY GENERATOR CIRCUIT BREAKER PANEL

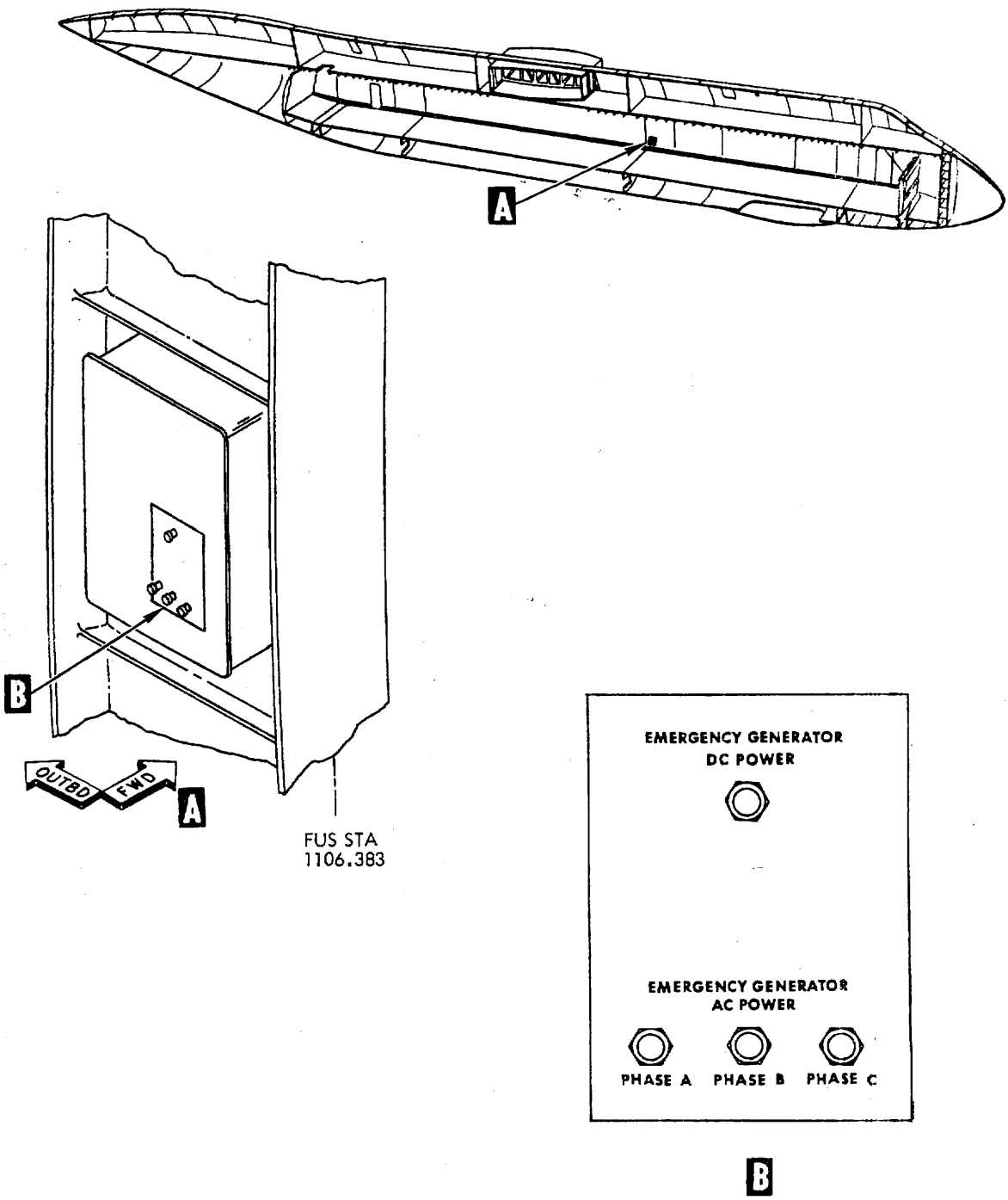

C5A-1-13/0-197

Figure 1-73.

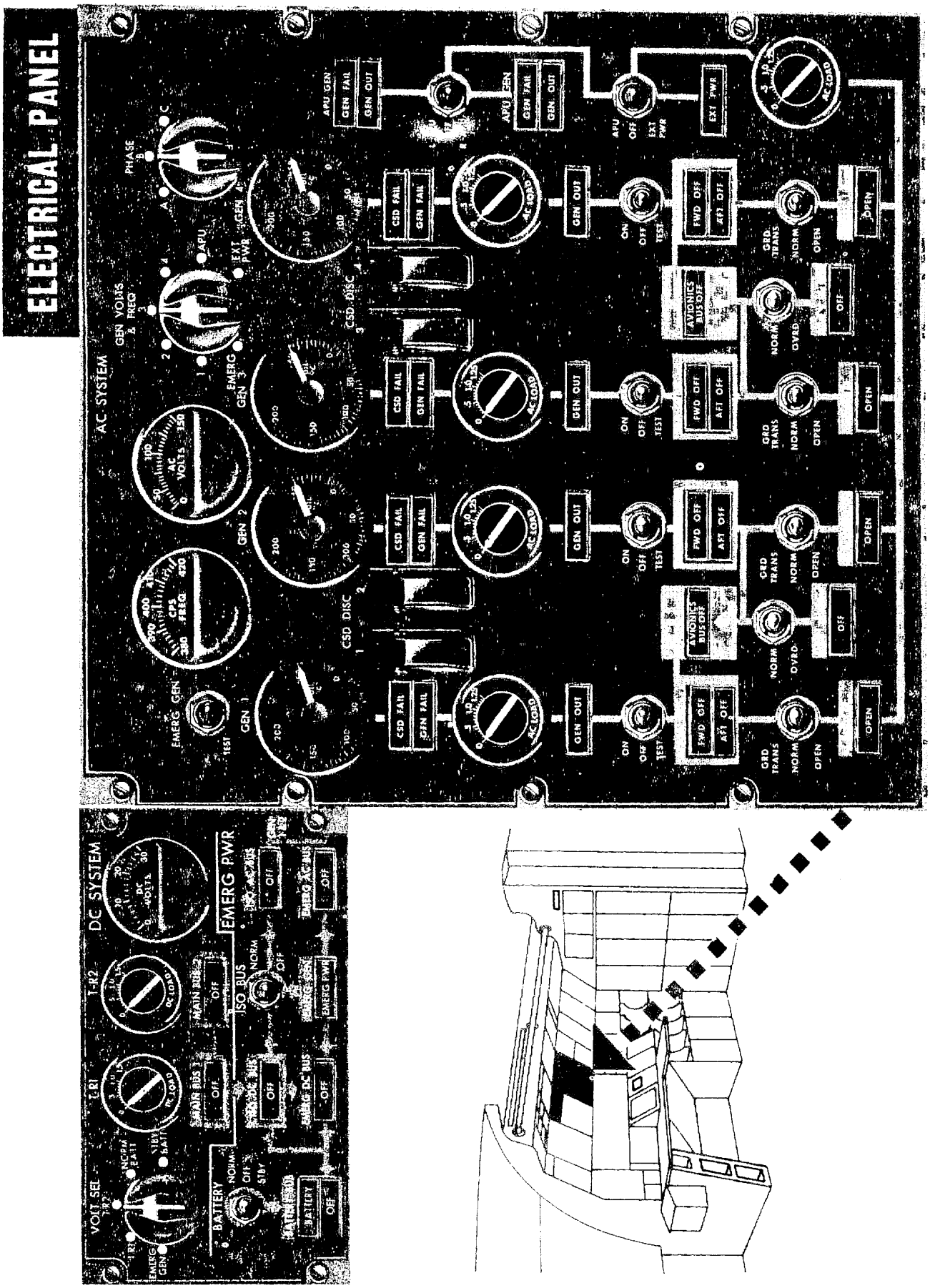
ELECTRICAL PANEL
AC SYSTEM
DC SYSTEM
EMERG PWR
ISO BUS
BATTERY
VOLT SEL
T-R1
T-R2
GEN 1
GEN 2
GEN 3
GEN 4
CSD DISC
CSD FAIL
GEN FAIL
GEN OUT
FWD OFF
AFT OFF
AVIONICS BUS OFF
GRD TRANS
NORM
OPEN
OFF
ON
TEST
APU GEN
APU OFF
EXT PWR
AC LOAD
DC LOAD
EMERG GEN
CPS FREQ
AC VOLTS
DC VOLTS
PHASE
C5A-1-0-027

Figure 1-74.

EXTERIOR LIGHTS LOCATIONS

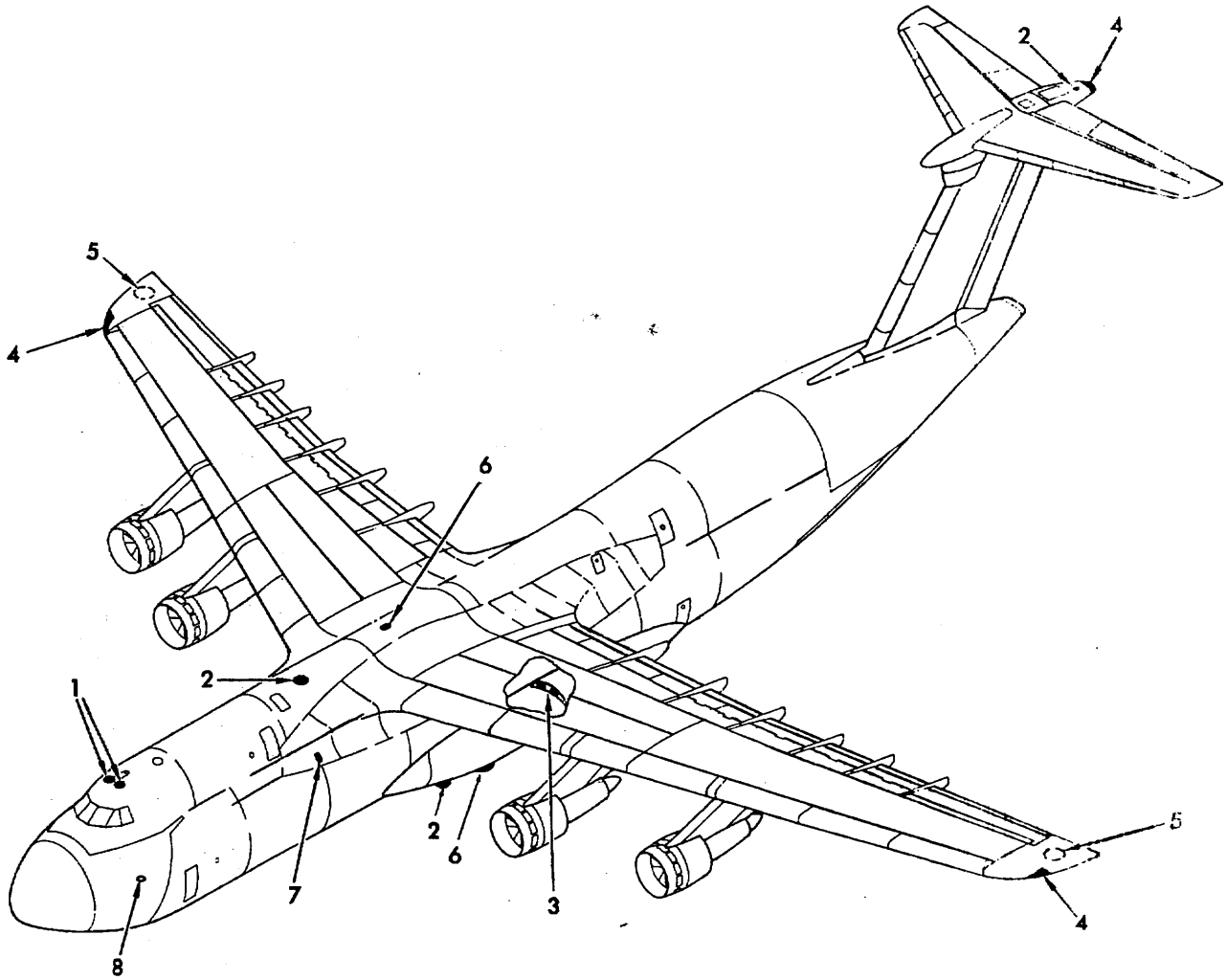

1. AERIAL REFUEL SLIPWAY LIGHTS
2. ANTI-COLLISION LIGHTS
3. TAXI LIGHTS - MAIN LANDING GEAR DOOR (WIDE BEAM) - RH SAME
4. NAVIGATION (POSITION) LIGHTS
5. WING TIP LANDING LIGHTS
6. FUSELAGE LIGHTS
7. WING LEADING EDGE AND ENGINE INLET LIGHTS (WIDE BEAM) - RH SAME
8. NOSE LANDING GEAR TAXI/LANDING LIGHT

NOTE

NARROW BEAM TAXI LIGHT
MOUNTED ON NOSE LANDING GEAR

C5A-1-6-059

Figure 1-75.

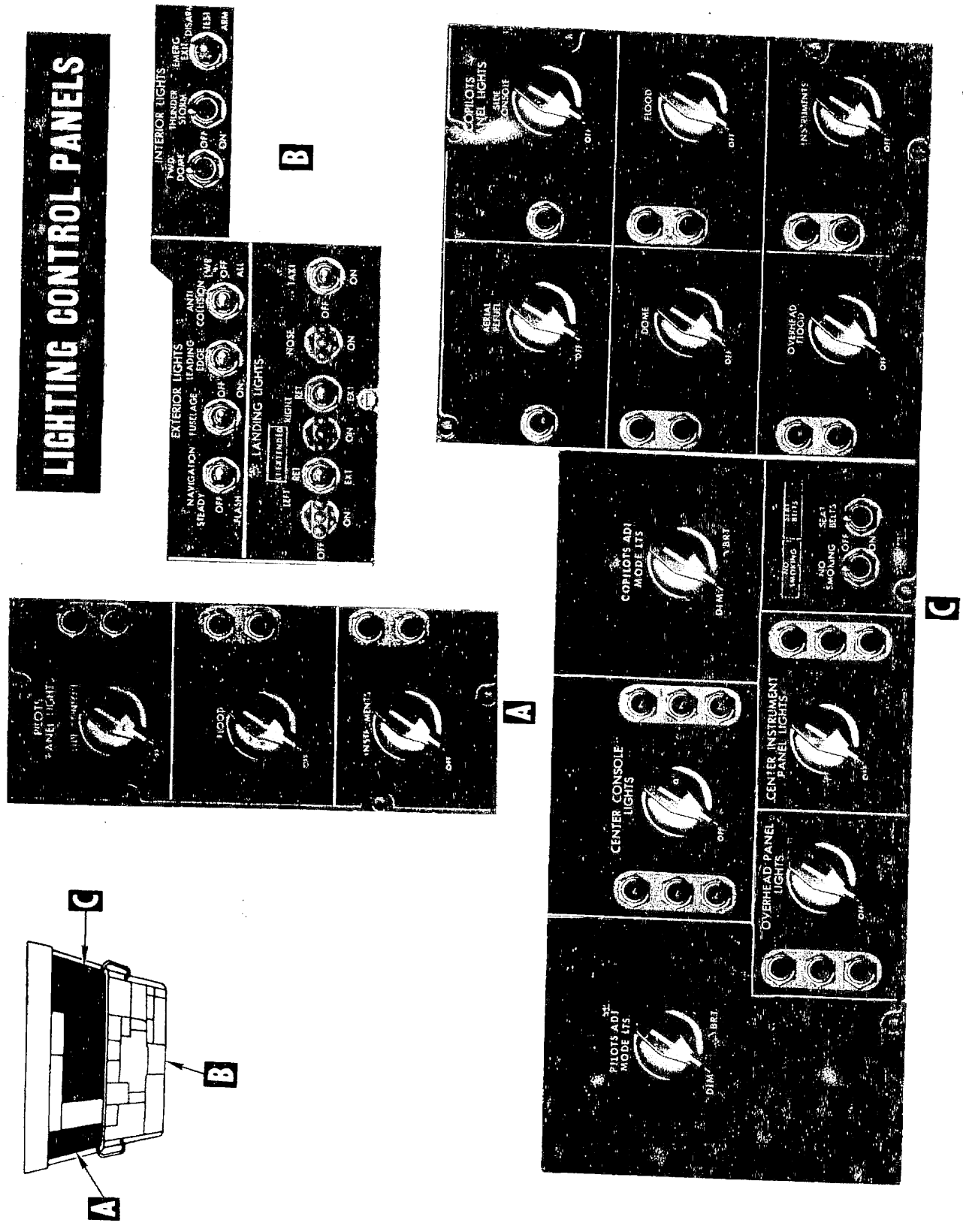

C5A-1-X3/4-061-1

Figure 1-76. (Sheet 1 of 3)

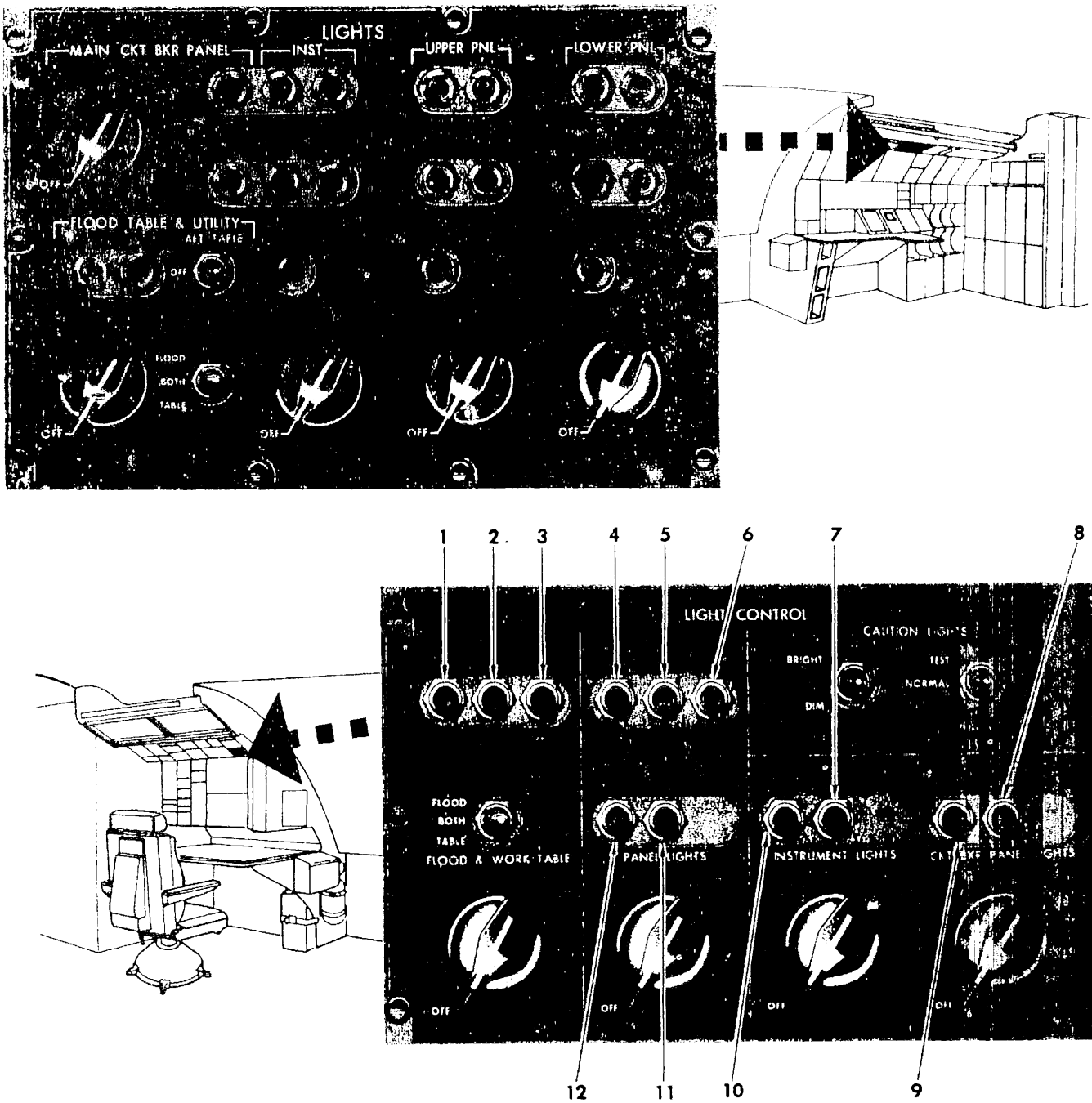

1. NAVIGATOR'S FLOOD
2. NAVIGATOR'S TABLE
3. THUNDERSTORM, FLOOD PWR AND SEXTANT
4. INTERCOM MONITOR AND AUX MONITOR CONTROL PANELS, AHRU 1 AND 2 CONTROL PANELS AND OXYGEN REGULATOR PANEL
5. RADAR SET CONTROL PANEL AND LORAN PANEL
6. IDNE CONTROL AND INDICATOR PANELS
7. VERTICAL VELOCITY INDICATOR, ATTITUDE INDICATOR, IAS INDICATOR AND DOPPLER INDICATOR
8. NAVIGATOR'S UTILITY
9. NAVIGATOR'S CIRCUIT BREAKER PANELS
10. MASTER WATCH, CLOCK, BDHI 1 AND 2 INDICATORS AND TAS INDICATOR
11. NAVIGATOR'S RADAR INDICATOR
12. RENDEZVOUS RADAR BEACON PANEL, EMAC PANEL, BDHI SELECTOR PANEL, CADC CONTROL PANEL AND NAVIGATOR'S ADS CONTROL PANEL

C5A-1-X3/2-061-2

Figure 1-76. (Sheet 2 of 3)

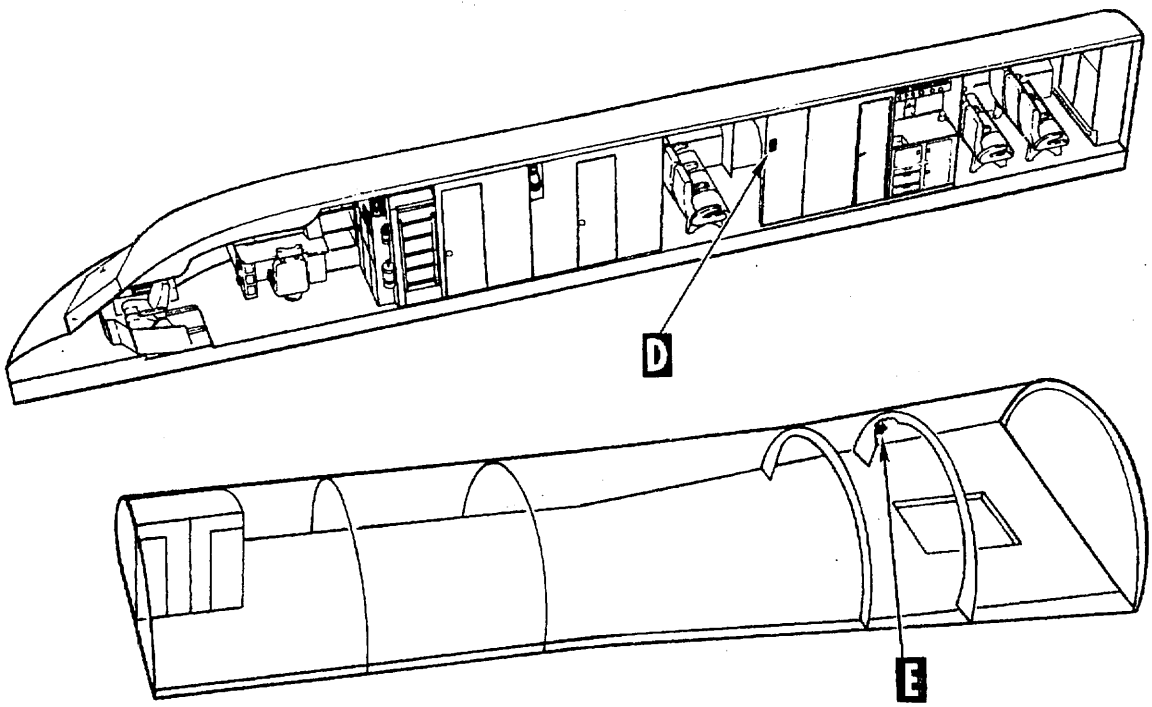

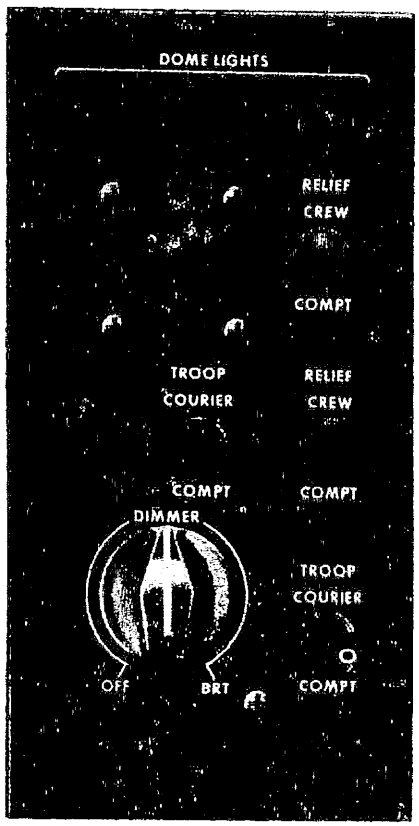

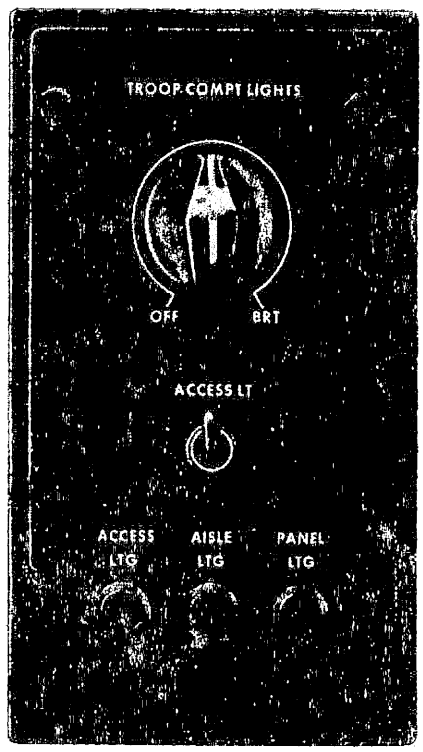

C5A-1-6-061-3

Figure 1-76. (Sheet 3 of 3)

INTERIOR LIGHTS LOCATIONS

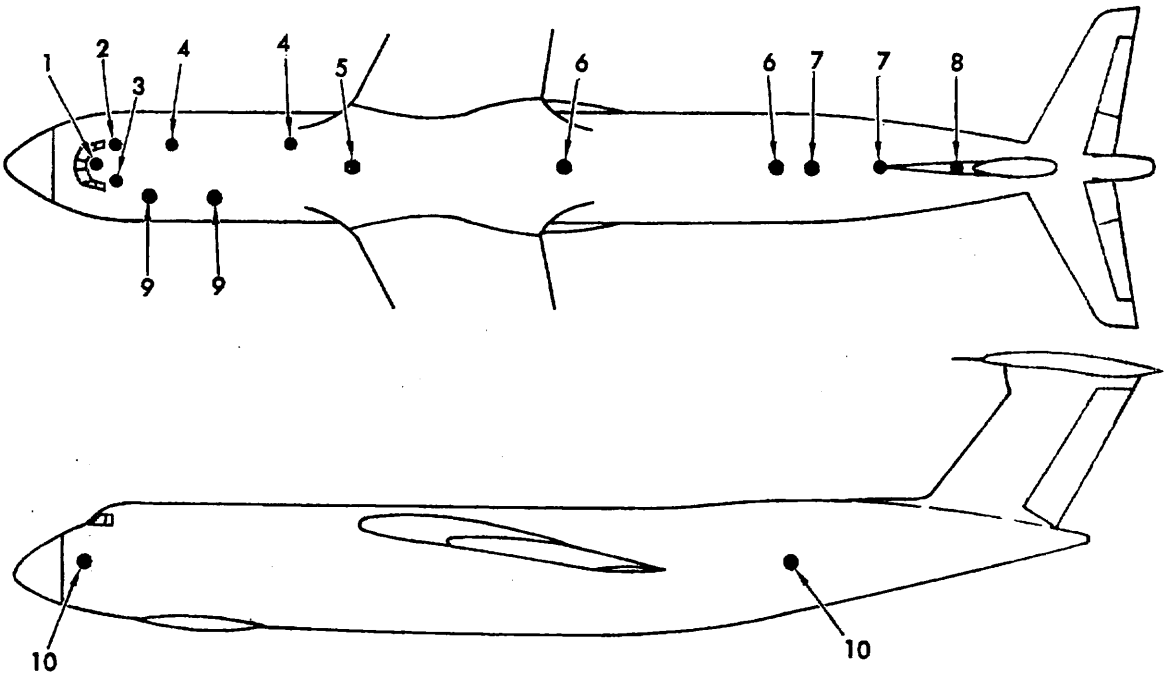

1. PILOT'S STATION
   - Instrument Panel Lights
   - Instrument Panel Flood Lights
   - Thunderstorm Lights
   - Overhead Panel Lights
   - Overhead Panel Floodlights
   - Utility Lights
   - Dome Lights
   - Aerial Refueling Panel Lights
   - Engine Emergency Shutdown Control Panel Lights
   - Glareshield
   - Side Console Panel Lights
   - Center Console Panel Lights
   - Emergency Exit Lights (Stairway Entrance)
   - Crew Entrance Stairway Floodlight

2. FLIGHT ENGINEER'S STATION
   - Instrument Panel Lights
   - Instrument Panel Flood Lights
   - Dome Lights
   - Work Table Flood Lights
   - Utility Light
   - Main Circuit Breaker Panel Lights
   - Emergency Exit Lights (At Escape Hatch No. 1)

3. NAVIGATOR'S STATION
   - Instrument Panel Lights
   - Instrument Panel Flood Lights
   - Dome Light
   - Work Table Flood Lights
   - Utility Light
   - Avionics Circuit Breaker Panel Lights
   - Caution Lights

4. RELIEF CREW COMPARTMENT
   - Dome Lights
   - Service Door Flood Light
   - Reading Lights
   - Lavatory Dome And Cornice Lights
   - Galley Lights
   - Emergency Exit Lights
   - Advisory Lights

5. ENVIRONMENTAL EQUIPMENT COMPARTMENT
   - Flood Lights

6. TROOP COMPARTMENT
   - Dome Lights
   - Lavatory Dome and Cornice Lights
   - Galley Lights
   - Emergency Exit Lights
   - Advisory Lights

7. VERTICAL STABILIZER ACCESS AREA
   - Flood Lights

8. VERTICAL STABILIZER INTERIOR
   - Flood Lights

9. AVIONICS EQUIPMENT COMPARTMENT
   - Flood Lights

10. CARGO COMPARTMENT
    - Overhead and Side Lights (Includes Red Lights)
    - Fixed Ramp Flood Lights (Fwd and Aft)
    - Adjustable Ramp Flood Lights (Fwd and Aft)
    - Curb Lights
    - Troop Jump Platform Lights
    - Emergency Exit Lights

C5A-1-9-052

Figure 1-77.

EMERGENCY EXIT LIGHT

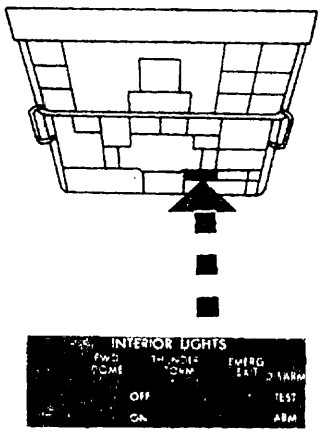

EMERGENCY EXIT LIGHT LOCATIONS

FLIGHT STATION LADDER ENTRANCE

FLIGHT STATION OVERHEAD EMERGENCY EXIT

RELIEF CREW COMPARTMENT OVERHEAD EMERGENCY EXIT

TROOP COMPARTMENT FORWARD SIDE EMERGENCY EXITS (LH & RH)

TROOP COMPARTMENT AFT SIDE EMERGENCY EXIT (RH)

TROOP COMPARTMENT SERVICE DOOR AND EMERGENCY EXIT (LH)

TROOP COMPARTMENT STAIRWAY ENTRANCE

CREW ENTRY DOOR (LH SIDE)

TROOP DOORS (LH & RH)

FLIGHT DECK SERVICE DOOR

C5A-1-X1/0-063

Figure 1-78.

PITOT STATIC SYSTEM

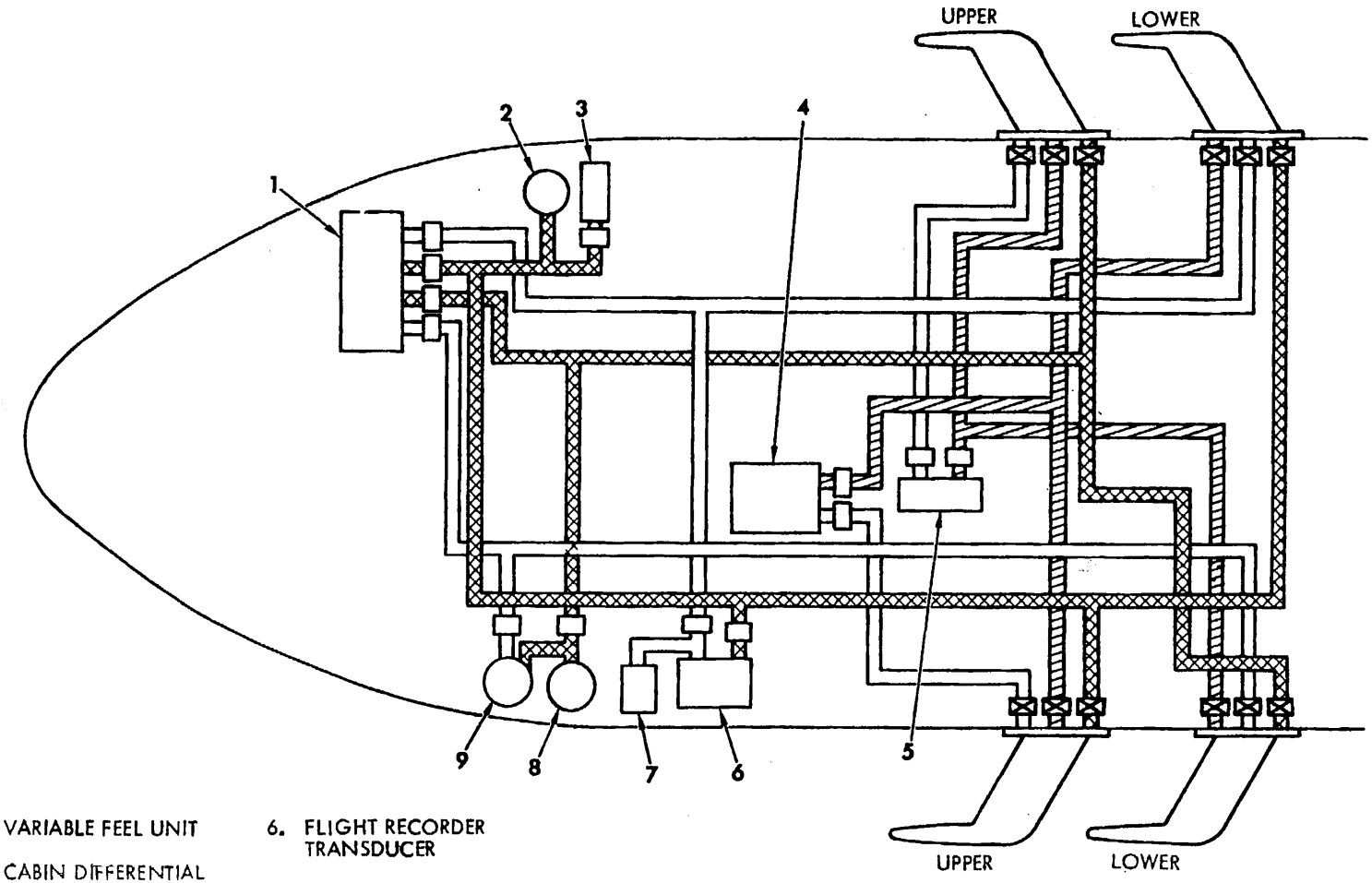

1. VARIABLE FEEL UNIT
2. CABIN DIFFERENTIAL PRESSURE INDICATOR
3. CABIN PRESSURE CONTROL BOX
4. NO. 1 CADC
5. NO. 2 CADC
6. FLIGHT RECORDER TRANSDUCER
7. MADAR RECORDER TRANSDUCER
8. NAVIGATORS ALTIMETER
9. NAVIGATORS AIRSPEED INDICATOR

5A-1-X1/0-07

Figure 1-79.

CADC SELECTOR PANEL

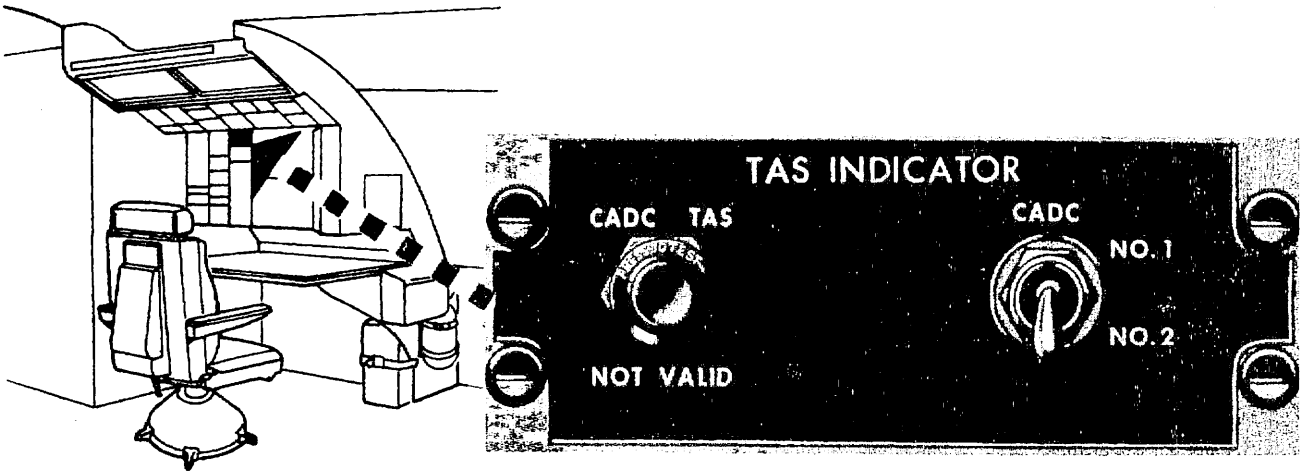

C5A-1-0-091

Figure 1-80.

AVIONICS EQUIPMENT

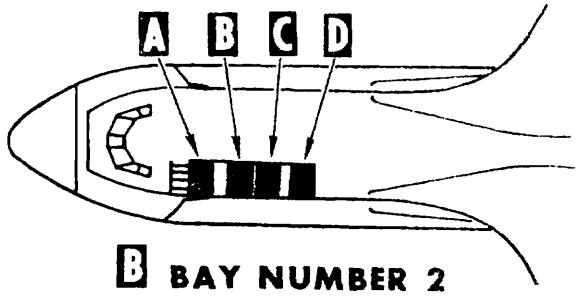

A BAY NUMBER 1

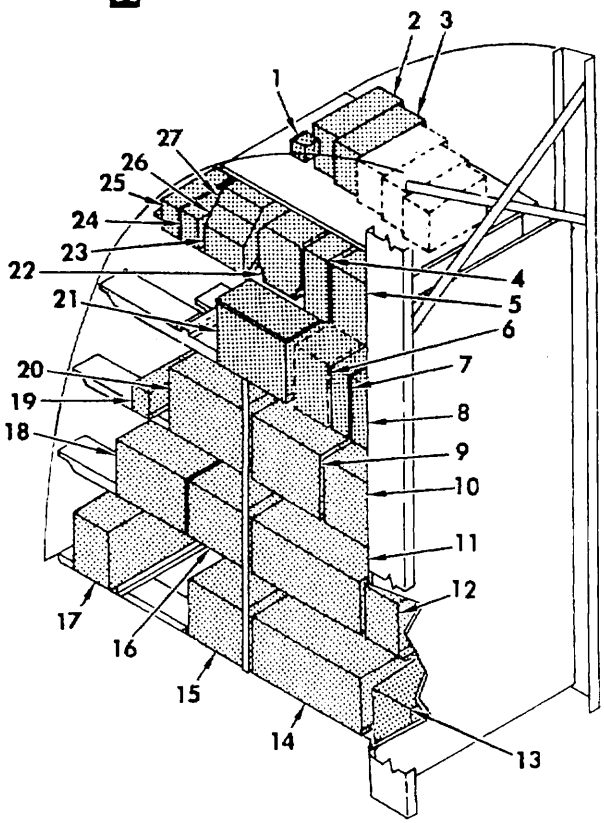

B BAY NUMBER 2

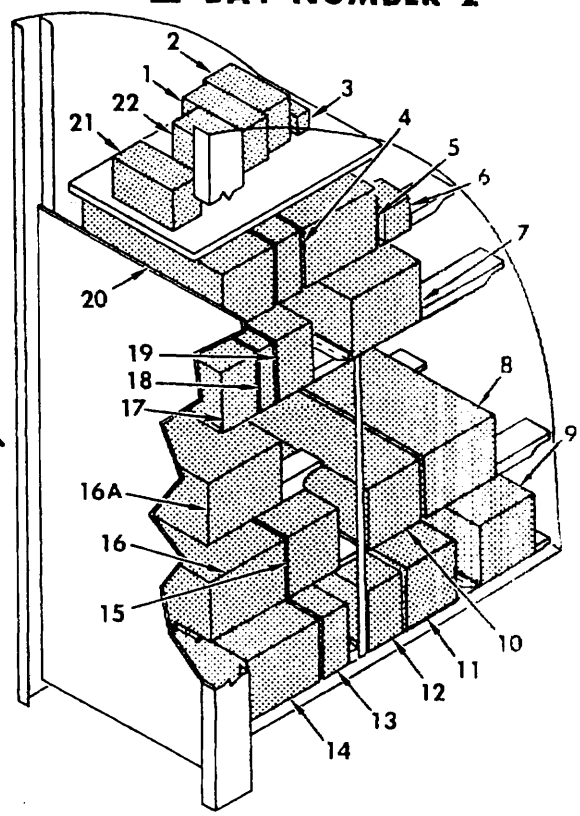

1. UHF RADIO ANTENNA SELECTOR NO. 1
2. AUTO. SIGNAL ACQUISITION REMOTE UNIT
3. AUTO. SIGNAL ACQUISITION REMOTE UNIT
4. FLIGHT DIRECTOR COMPUTER NO. 1
5. CADC NO. 1
6. VHF NAV RECEIVER NO. 1
7. GLIDESLOPE RADIO RECEIVER NO. 1
8. AHRU ELECTRONIC COUPLER NO. 1
9. DATA PROCESSOR/POWER SUPPLY
10. TACAN TRANSCEIVER NO. 1
11. IDNE AUXILIARY COMPUTER
12. INERTIAL DOPPLER SUBSYSTEM ELECTRONIC UNIT (SDC)
13. HEADING AND ATTITUDE MONITOR UNIT.
14. IDNE PRIMARY COMPUTER
15. PRIMARY ANALOG/DIGITAL CONVERTER
16. AUXILIARY ANALOG/DIGITAL CONVERTER
17. VHF RADIO TRANSCEIVER NO. 1
18. UHF RADIO TRANSCEIVER NO. 1
19. MARKER BEACON RECEIVER
20. MULTI-MODE RADAR DATA PROCESSOR POWER SUPPLY
21. MULTI-MODE RADAR SYSTEM DISTRIBUTION BOX
22. VHF/FM RADIO TRANSCEIVER
23. INTERCOM SYSTEM CONTROL PANEL
24. INTERCOM SYSTEM WINCH CONTROL AMPLIFIER
25. INTERCOM SYSTEM WINCH CONTROL AMPLIFIER
26. INTERCOM SYSTEM MONITOR PANEL
27. INTERCOM SYSTEM AUXILIARY MONITOR PANEL

1. MANUAL SIGNAL ACQUISITION REMOTE UNIT
2. MANUAL SIGNAL ACQUISITION REMOTE UNIT
3. UHF RADIO ANTENNA SELECTOR NO. 2
4. FLIGHT DIRECTOR COMPUTER NO. 2
5. CDPIR ELECTRONIC UNIT
6. IFF TRANSPONDER TEST SET (1)
7. IFF TRANSCEIVER
8. UHF RADIO TRANSCEIVER NO. 2
9. TACAN TRANSCEIVER NO. 2
10. LORAN RECEIVER
11. SIGNAL CONDITIONER MULTIPLEXER (SLR) (2)
12. VHF RADIO TRANSCEIVER NO. 2
13. MADAR SUBSYSTEM MANUAL MULTIPLEXER
14. MADAR SUBSYSTEM CENTRAL MULTIPLEXER ADAPTER
15. SKE SYNCHRONIZER
16. MADAR SUBSYSTEM DIGITAL COMPUTER
16A. FSS CENTRAL PROCESSING UNIT (3)
17. AHRU ELECTRONIC COUPLER NO. 2
18. GLIDESLOPE RADIO RECEIVER NO. 2
19. VHF NAV RECEIVER NO. 2
20. CADC NO. 2
21. AUTO. SIGNAL ACQUISTION REMOTE UNIT
22. AUTO. SIGNAL ACQUISTION REMOTE UNIT

C5A-1-X4/1-035-1

Figure 1-81. (Sheet 1 of 2)

C BAY NUMBER 3

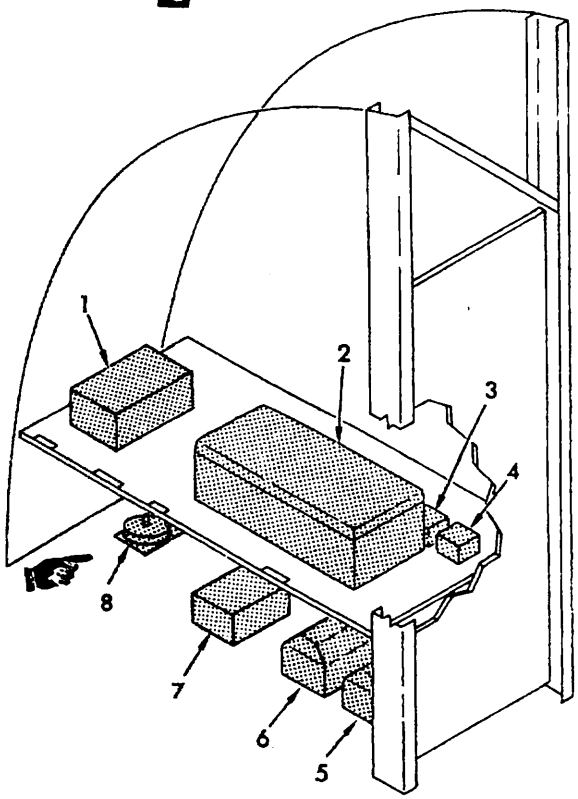

1. AUDIBLE WARNING
2. MAINTENANCE DATA RECORDER
3. RATE OF TURN SENSOR
4. RATE OF TURN SENSOR
5. AHRU NO. 1 GYRO PLATFORM
6. AHRU NO. 2 GYRO PLATFORM
7. GYRO, 2 AXIS (SLR) 2
8. ACCELEROMETER (SLR) 4

D BAY NUMBER 4

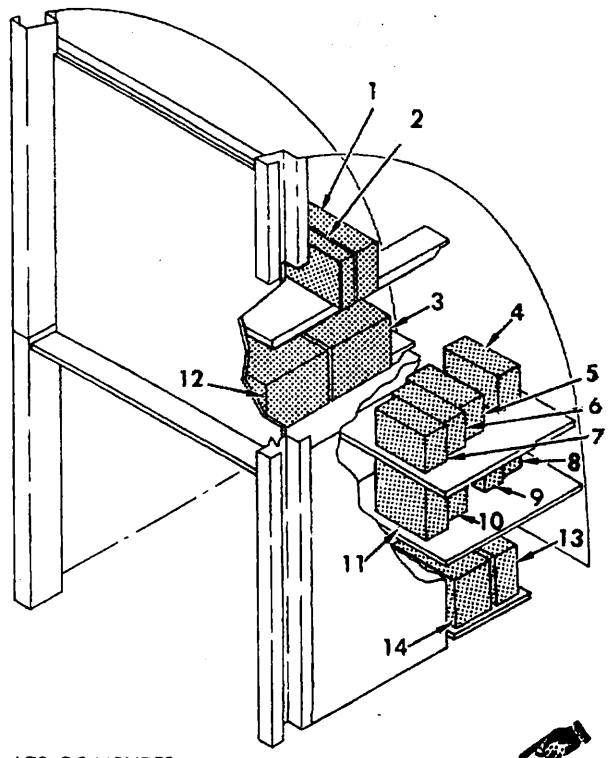

1. ATS COMPUTER
2. TRIM COMPENSATOR SYSTEM COMPUTER 5
3. AFCS ROLL/YAW/PACS COMPUTER
4. AUTO. SIGNAL AQUISITION REMOTE UNIT
5. AUTO. SIGNAL ACQUISITION REMOTE UNIT
6. AUTO. SIGNAL ACQUISITION REMOTE UNIT
7. AUTO. SIGNAL ACQUISITION REMOTE UNIT
8. MANUAL SIGNAL ACQUISITION REMOTE UNIT
9. MANUAL SIGNAL ACQUISITION REMOTE UNIT
10. STALLIMETER SUBSYSTEM COMPUTER
11. GO-AROUND ATTITUDE SUBSYSTEM COMPUTER
12. AUTOPILOT PITCH COMPUTER
13. PITCH AUGMENTATION COMPUTER
14. YAW & LATERAL AUGMENTATION COMPUTER

NOTE

1. ON 90005 AND UP AND AIRPLANES MODIFIED BY T.O. 1440.
2. ON AIRPLANES MODIFIED BY T.O. 1377 BUT NOT BY T.O. 1377C.
3. ON AIRPLANES MODIFIED BY T.O. 1387.
4. ON AIRPLANES MODIFIED BY T.O. 1377C.
5. REMOVED ON 68307, 70167, 70168, 80212 AND UP AND AIRPLANES MODIFIED BY T.O. 1091.

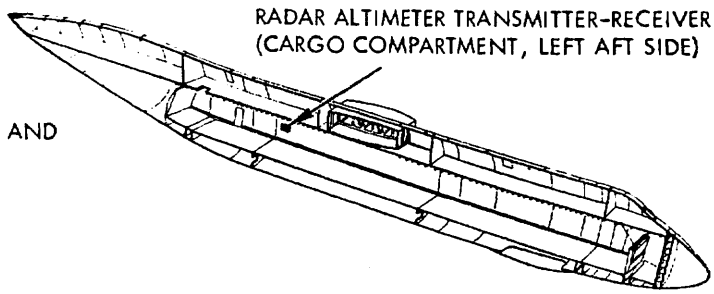

C5A-1-X4/1-035-2

Figure 1-81. (Sheet 2 of 2)

ANTENNA LOCATIONS

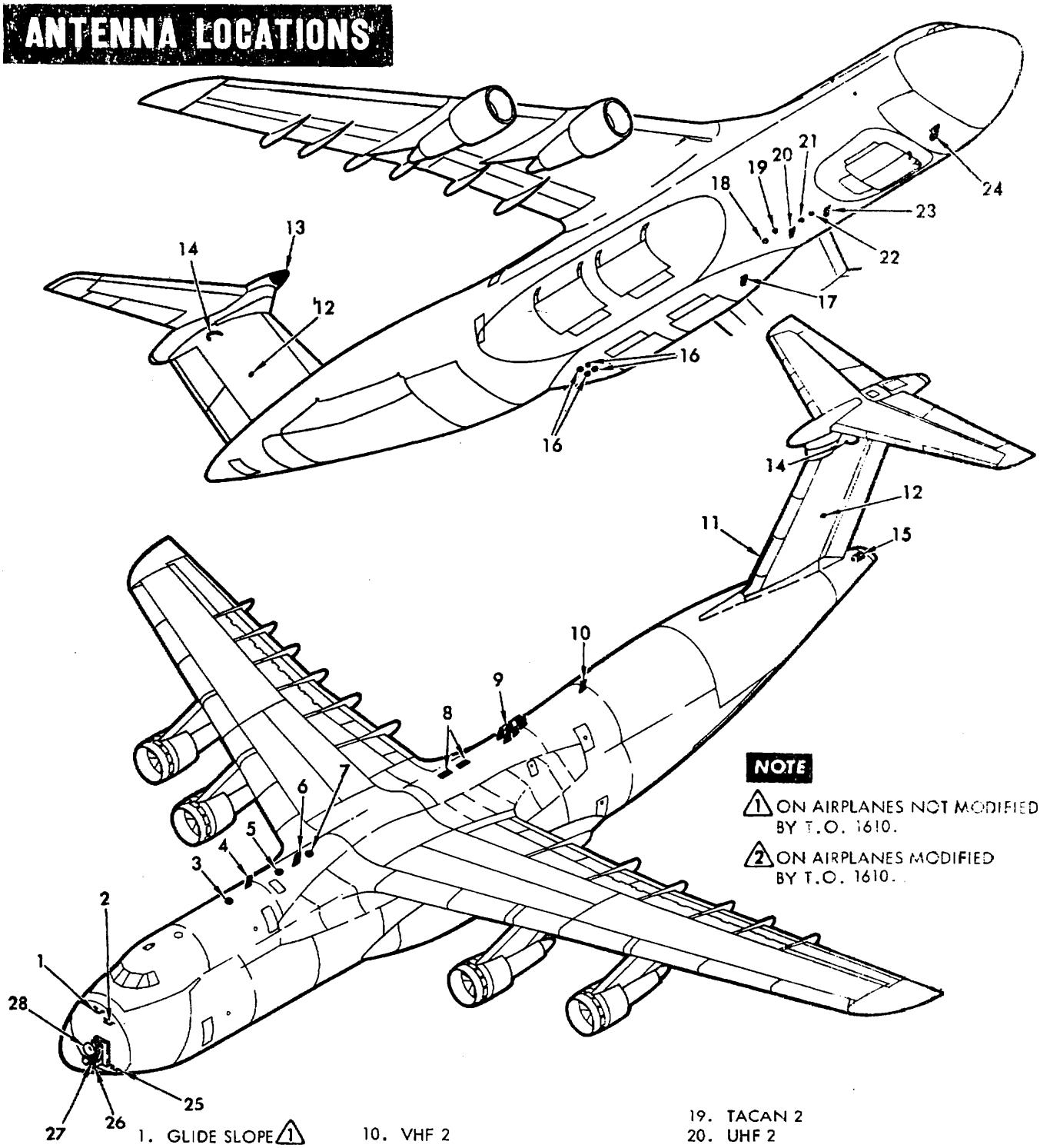

1. GLIDE SLOPE 1
2. LOCALIZER
3. IFF
4. UHF 2
5. TACAN 1
6. UHF 1
7. TACAN 2
8. ADF LOOPS
9. ADF SENSE
10. VHF 2
11. HF 1 AND 2
12. RENDEZVOUS BEACON
13. LORAN
14. VHF NAV
15. STATION KEEPING - AFT
16. RADAR ALTIMETER
17. VHF - FM
18. IFF
19. TACAN 2
20. UHF 2
21. MARKER BEACON
22. TACAN 1
23. UHF 1
24. VHF 1
25. GLIDE SLOPE 2
26. DOPPLER RADAR
27. STATION KEEPER - FORWARD
28. MULTI-MODE RADAR

C5A-1-X3/4-052

Figure 1-82.

This page intentionally left blank.

TABLE OF

NAME	DESIGNATION	FUNCTION
INTERCOM	*	CREW INTERCOMMUNICATION
PUBLIC ADDRESS	AIC-13	ANNOUNCEMENTS TO TROOP AND CARGO COMPARTMENT
HF COMM	*	VOICE COMMUNICATION (LONG RANGE)
VHF COMM	*	VOICE COMMUMICATION
VHF-FM COMM	*	VOICE COMMUNICATION (SHORT RANGE)
UHF COMM	*	VOICE COMMUNICATION
ADF RADIO	*	HOMING, RECEIVES VOICE OR CODE SIGNALS
VHF NAV	*	RECEIVES LOCALIZER AND VOR RADIAL SIGNALS
TACAN	*	MEASURES SLANT RANGE & RECEIVES TACAN RADIAL SIGNALS
GLIDESLOPE RCVR	*	RECEIVES GLIDESLOPE SIGNALS
MARKER BEACON	*	RECEIVES LOCATION MARKER SIGNALS
IFF	APX-64	IDENTIFIES AIRCRAFT AND REPORTS ALT TO GROUND FACILITY
LORAN C	*	RECEIVES NAV FIXING SIGNALS
DOPPLER RADAR	*	PROVIDES GROUND SPEED, DRIFT SIGNALS AND RADAR ALTITUDE
MULTI-MODE RADAR	*	NAV FIXING, GROUND MAPPING, WEATHER LOCATION & AVOIDANCE, TERRAIN FOLLOWING & AVOIDANCE, & CONTOUR MAPPING.
RADAR BEACON	*	IDENTIFIES AIRCRAFT FOR AIR REFUELING RENDEZVOUS OPERATIONS.
STATION KEEPING RADAR	*	PROVIDES RELATIVE BEARING & RANGE OF OTHER AIRCRAFT. TRACKS OTHER AIRCRAFT.
INERTIAL GUIDANCE NAV CMPTR-PRIMARY	*	PROVIDES NAV AND ADI STEERING BAR OUTPUTS
INERTIAL GUIDANCE NAV CMPTR-AUXILIARY	*	PROVIDES BACKUP NAV AND ADI STEERING BAR OUTPUTS
RADAR ALTIMETER	*	PROVIDES ALTITUDE INDICATIONS ABOVE THE TERRAIN, AND ALTITUDE INPUTS TO THE COMPUTER SYSTEM
CADC	*	PROVIDES ALTITUDE, IAS, TAS, MACH, DIFF. PRESS, & STATIC AIR TEMP.
AHRU	*	PROVIDES HDG REF. AT ALL LATITUDES, & PITCH, ROLL & HEADING
FLIGHT DIRECTOR	*	PROVIDES ADI AND PCI STEERING COMMANDS, DEVIATIONS & FLAG LOGIC; HSI HORIZONTAL DEVIATION, & FLAG LOGIC.
AFCS	*	PROVIDES AUTOMATIC PILOT FUNCTION

C5A-1-XI/[illegible]-1

NOTE

* MISSING DESIGNATION NUMBERS HAVE NOT BEEN ASSIGNED.

Figure 1-83. (Sheet 1 of 2)

AVIONICS EQUIPMENT

CREW MEMBER	RANGE	LOCATION OF CONTROLS
ALL	AIRCRAFT INTERIOR	ALL FLIGHT STATIONS, REMOTE CONTROL UNITS USED IN TROOP COMPT, CARGO COMPT AND AT SERVICE RECEPTACLES.
PILOT, COPILOT & LOADMASTER	AIRCRAFT INTERIOR	PILOTS' CENTER CONSOLE, CREW REST AREA, AFT TROOP COMPT, FORWARD AND AFT CARGO COMPT.
PILOT & COPILOT	0 TO 2500 MILES	PILOTS' CENTER CONSOLE
PILOT & COPILOT	LINE-OF-SIGHT	PILOTS' CENTER CONSOLE
COPILOT	LINE-OF-SIGHT	COPILOTS' SIDE CONSOLE
PILOT & COPILOT	LINE-OF-SIGHT	PILOTS' CENTER CONSOLE
PILOT & COPILOT	0 TO 200 MILES	PILOTS' CENTER CONSOLE
PILOT & COPILOT	0 TO 200 MILES	PILOTS' CENTER CONSOLE
PILOT & COPILOT	0 TO 300 MILES	PILOTS' CENTER CONSOLE
PILOT & COPILOT	UP TO 15 MILES	PILOTS' CENTER CONSOLE (VHF NAV)
PILOT & COPILOT	ANY ALTITUDE OVER STATION	PILOTS' INSTRUMENT PANEL
PILOT & COPILOT	LINE-OF-SIGHT	PILOTS' CENTER CONSOLE
NAVIGATOR	TO 2500 MILES	NAVIGATOR'S INSTRUMENT PANEL
NAVIGATOR	0-999 KGS & ± 30°	NAVIGATOR'S INSTR. PANEL
PILOT, COPILOT & NAVIGATOR	.5 TO 250 MILES	NAVIGATOR'S INSTR. PANEL
NAVIGATOR	LINE-OF-SIGHT	NAVIGATOR'S INSTR. PANEL
PILOT & COPILOT	29,000 FEET SLANT RANGE	PILOTS' CENTER INSTRUMENT PANEL
NAVIGATOR		NAVIGATOR'S INSTRUMENT PANEL & PILOTS' NAV SELECT PANELS
NAVIGATOR		NAVIGATOR'S INSTRUMENT PANEL & PILOTS' NAV SELECT PANELS
PILOT & COPILOT	-20 TO +2500 FEET	PILOT & COPILOT INSTRUMENT PANELS
PILOT & COPILOT	50,000 FT, 500 KIAS, 650 KTAS, 1.0 MACH, 14.0 IN. HG, -100 TO +60°C	TEST SWITCH - PILOT'S & COPILOT'S SIDE CONSOLES
NAVIGATOR	ALL LATITUDES, 0-360 DEGREES	NAVIGATOR'S INSTRUMENT PANEL & PILOTS' NAV SELECT PANELS.
PILOT & COPILOT		MAIN INSTRUMENT PANEL
PILOT & COPILOT		PILOTS' CENTER CONSOLE & CONTROL WHEELS

C5A-1-7-040-2

Figure 1-83. (Sheet 2 of 2)

INTERCOM PANELS

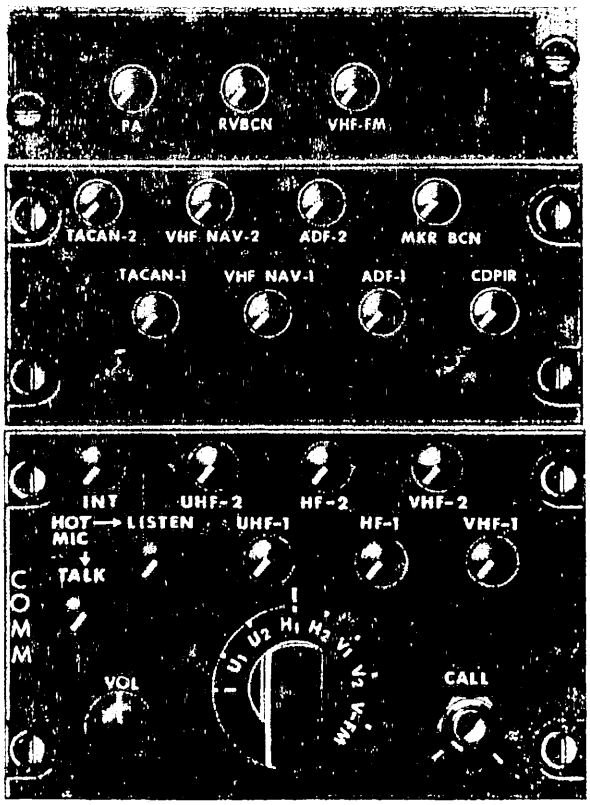

A AUXILIARY MONITOR PANEL

B MONITOR PANEL

C MAIN INTERCOM PANEL

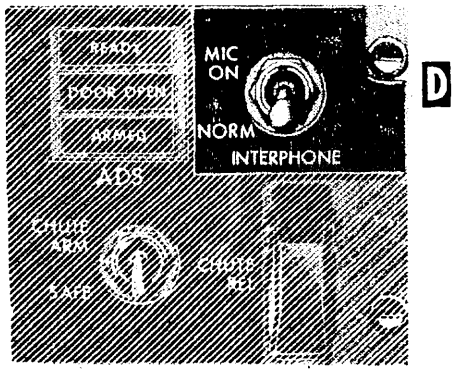

ALTERNATE AIRDROP INTERCOM SWITCH (NAVIGATOR'S ADS PANEL)

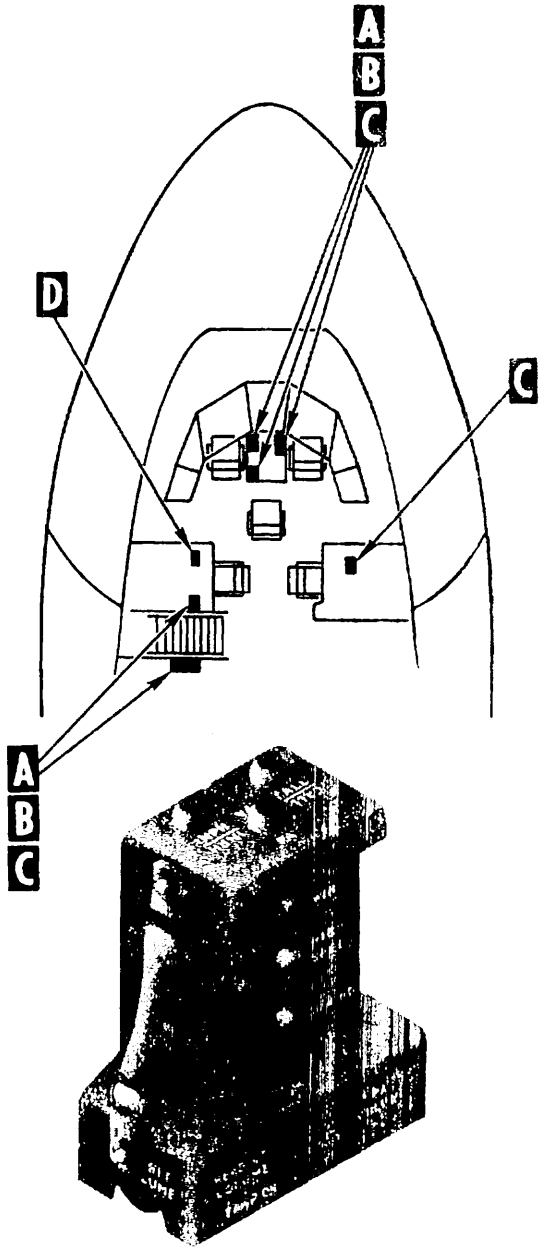

REMOTE INTERCOM, PA, AND WINCH CONTROL ①②

NOTE

① WINCH CONTROLS ON ONE UNIT ONLY. STOWED NEAR THE LH CENTER CARGO COMPARTMENT INTERPHONE PLUG-IN RECEPTACLE.

② WINCH CONTROLS DEACTIVATED ON AIRPLANES MODIFIED BY T.O. 1305.

C5A-1-X3/0-033

Figure 1-84.

INTERPHONE JACK RECEPTACLE LOCATIONS

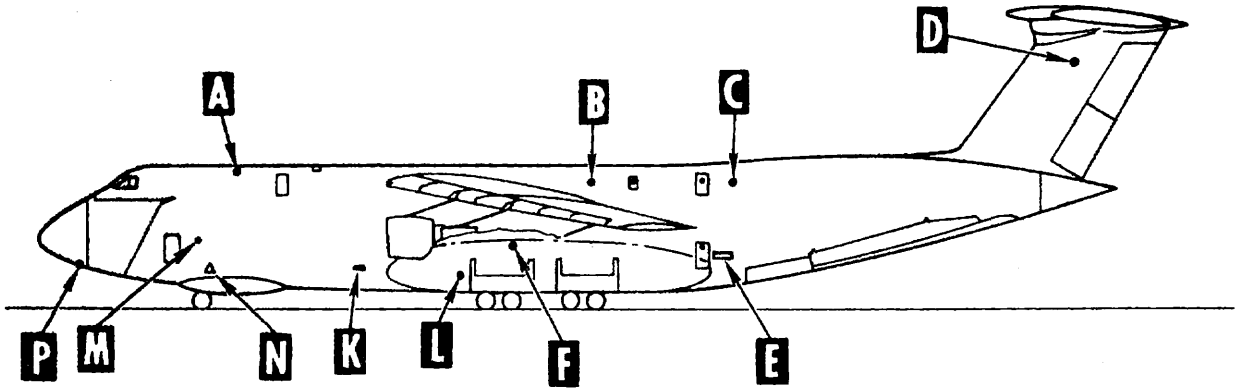

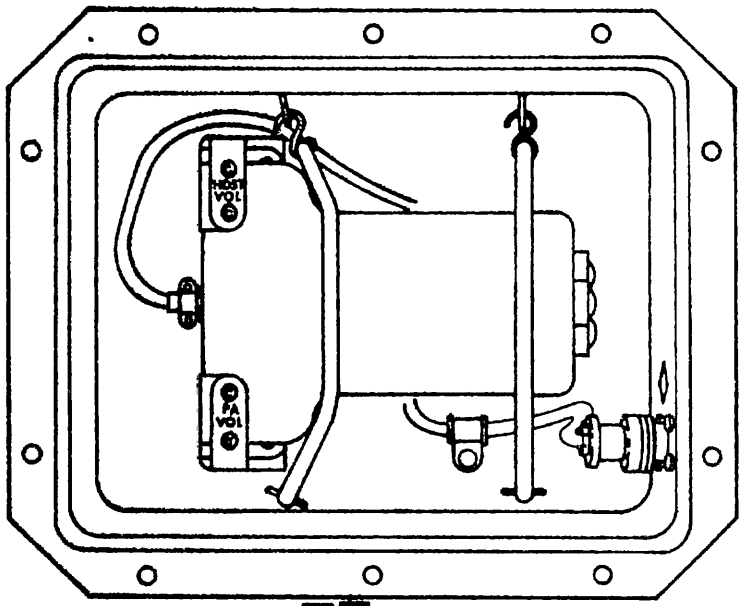

A C 1

VIEW LOOKING FWD R.H. SIDE

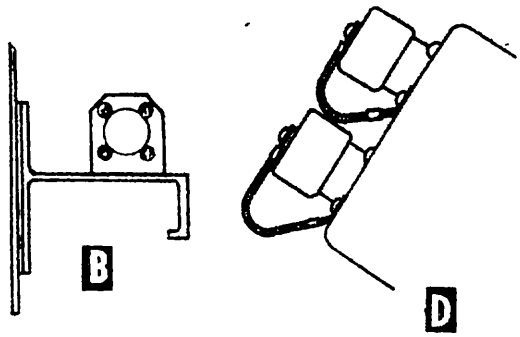

NOTE

1. TROOP COMPARTMENT STOWAGE RECEPTACLE IS SIMILIAR.
2. ON AIRPLANES MODIFIED BY T.O. 1305.
3. ON AIRPLANES NOT MODIFIED BY T.O. 1305.

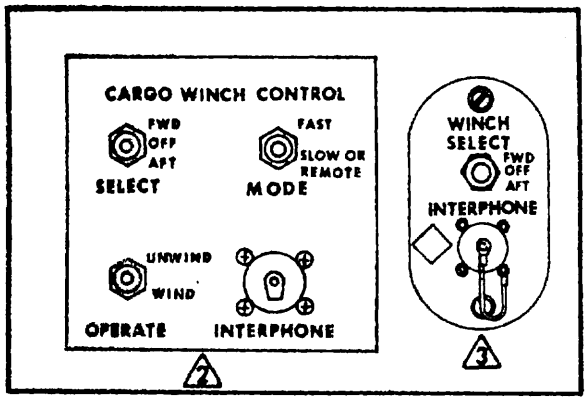

E

VIEW LOOKING OUTBD R.H. SIDE

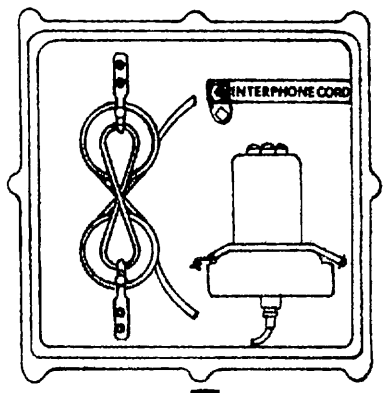

E

VIEW LOOKING OUTBD L.H. SIDE

C5A-1-X3/0-111-1

Figure 1-85. (Sheet 1 of 3)

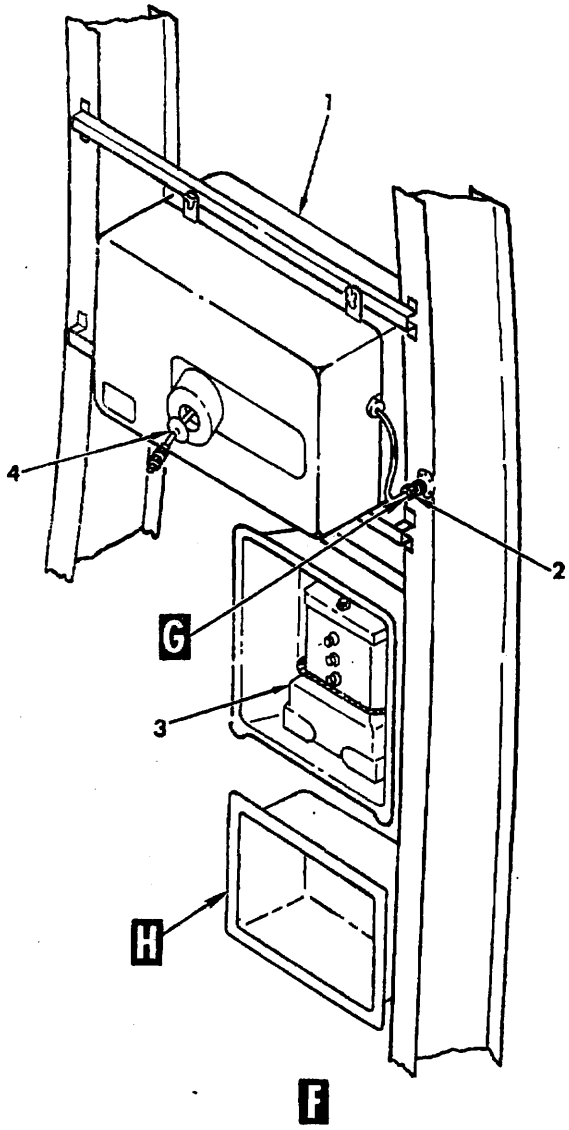

F

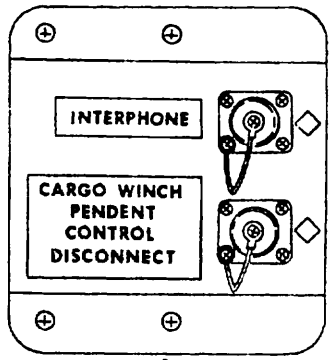

VIEW LOOKING OUTBD L.H. SIDE, R.H. SIDE SIMILAR

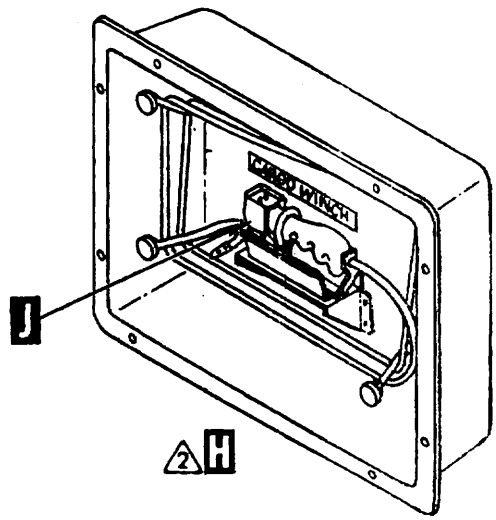

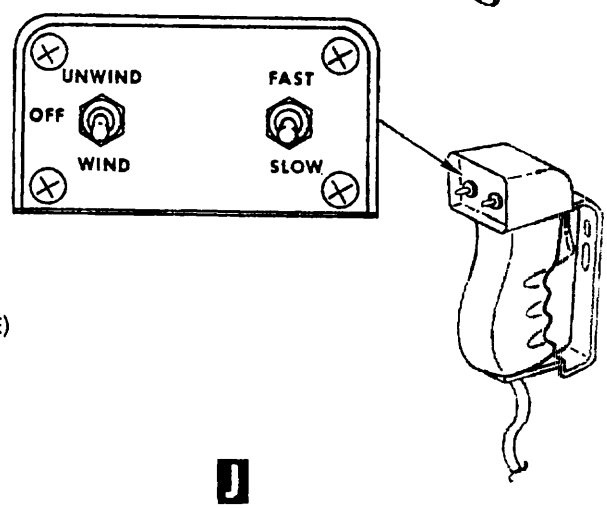

1. INTERPHONE CABLE RETRACTOR (INSTALLATION SIMILAR ON R.H. SIDE)
2. INTERPHONE PLUG-IN RECEPTACLE (R.H. SIDE, SAME)
3. REMOTE INTERPHONE UNIT
4. INTERPHONE CABLE

J

REMOTE WINCH CONTROL GRIP ASSEMBLY

C5A-1-X3/0-1111-2

Figure 1-85. (Sheet 2 of 3)

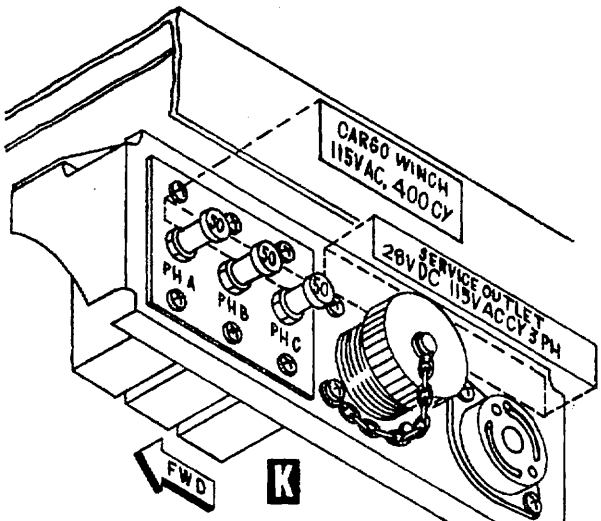

K

VIEW LOOKING OUTBD R.H. SIDE
SERVICE OUTLET FUS STA 880—WL 155

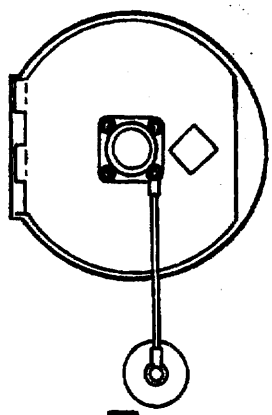

L

VIEW LOOKING OUTBD
R.H. SIDE; L.H. SIDE, SAME

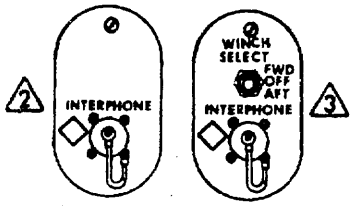

M

VIEW LOOKING
OUTBD R.H. SIDE

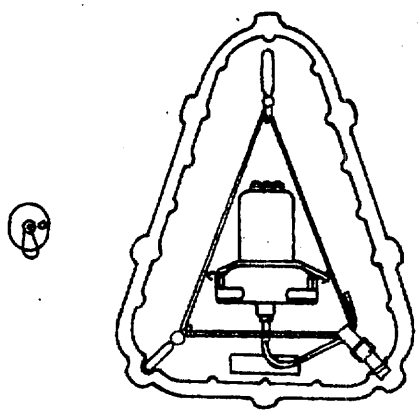

N

VIEW LOOKING OUTBD L.H. SIDE

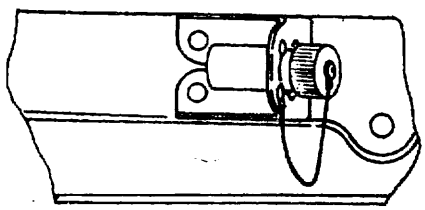

P

VIEW LOOKING AFT

C5A-1-X3/0-111-3

Figure 1-85. (Sheet 3 of 3)

PUBLIC ADDRESS SYSTEM PANELS

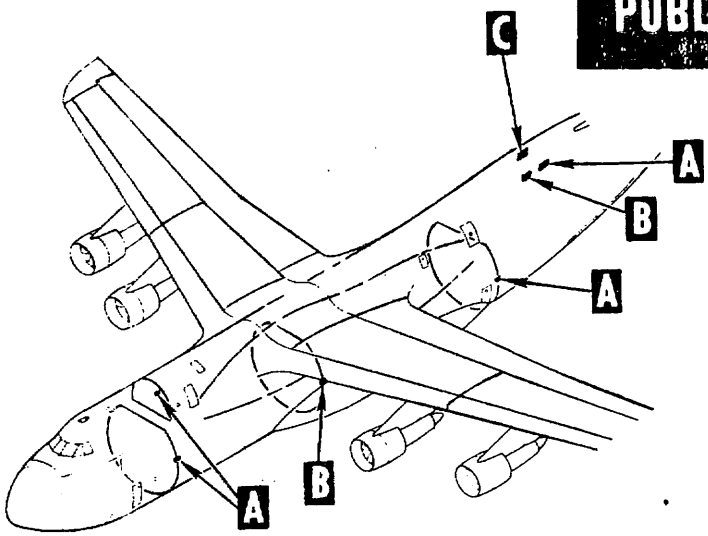

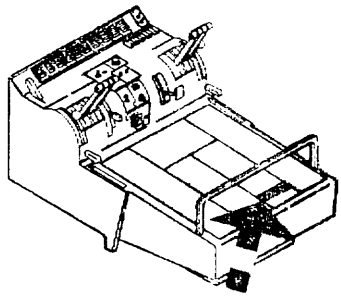

PUBLIC ADDRESS SYSTEM PANEL

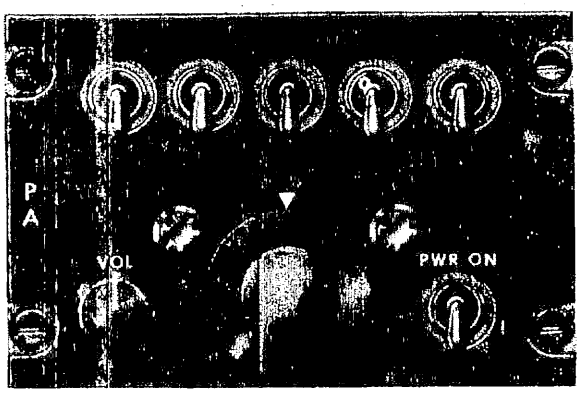

A 1 3

AREA PUBLIC ADDRESS SYSTEM PANEL

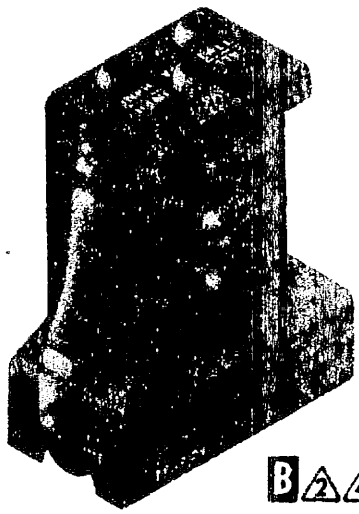

B 2 4

REMOTE INTERCOM P. A. AND WINCH CONTROL UNIT

NOTE

1. THE FIVE MIXER SWITCHES ARE NOT OPERATIVE

2. PLUG-IN RECEPTACLE AND STORAGE PROVISIONS IN THIS AREA.

3. AREA PANEL LOCATION — SELECTOR SWITCH POSITIONS

RELIEF CREW COMPARTMENT	NOT LABELED
TROOP COMPARTMENT	ON, OFF (ON 90005 AND UP AND AIRPLANES MODIFIED BY T.O. 503). NOT LABELED (ON 68307, 70167, 70168 AND 70170 THROUGH 90004 NOT MODIFIED BY T.O. 503)
FORWARD CARGO COMPARTMENT	CARGO, RAMP, OFF
AFT CARGO COMPARTMENT	CARGO, RAMP, OFF

4. WINCH CONTROLS DEACTIVATED ON AIRPLANES MODIFIED BY T.O. 1305.

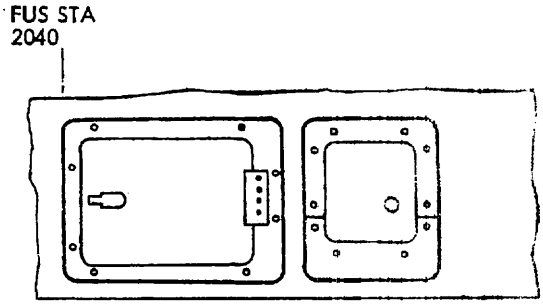

C

TROOP COMPARTMENT P.A. PANELS

C5A-1-X3,'0-034

Figure 1-86.

UHF RADIO PANELS

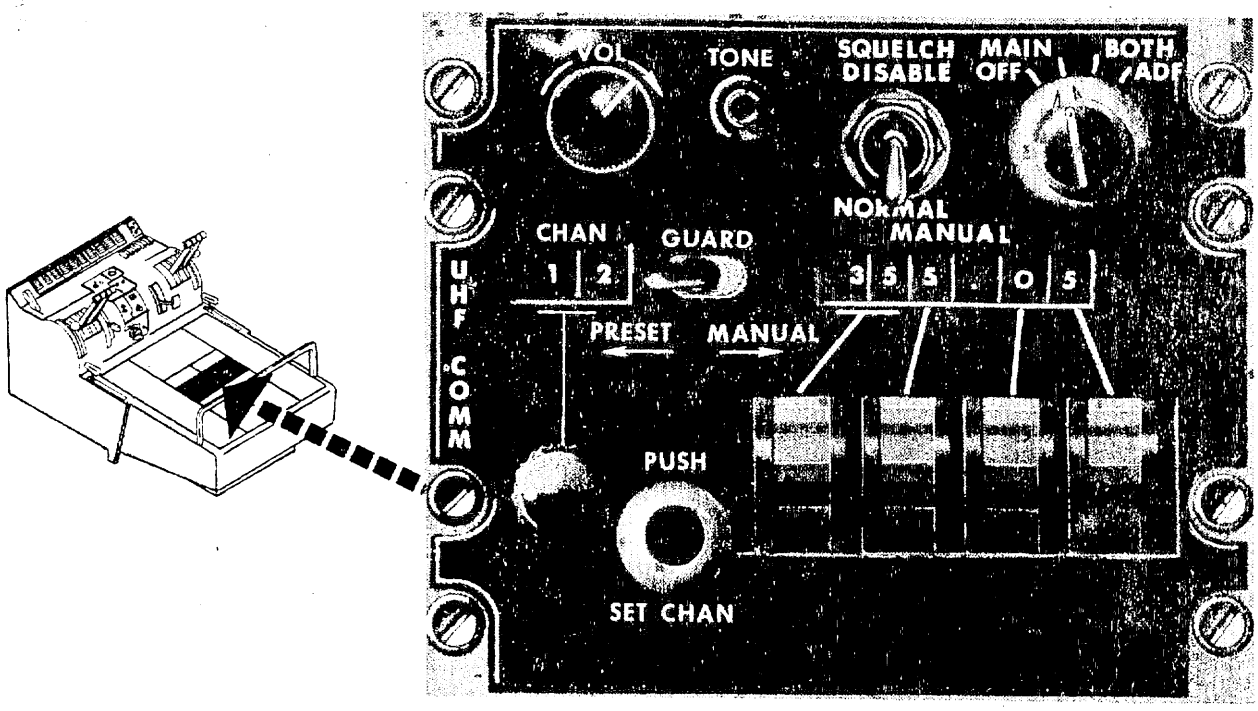

C5A-1-9-087

Figure 1-87.

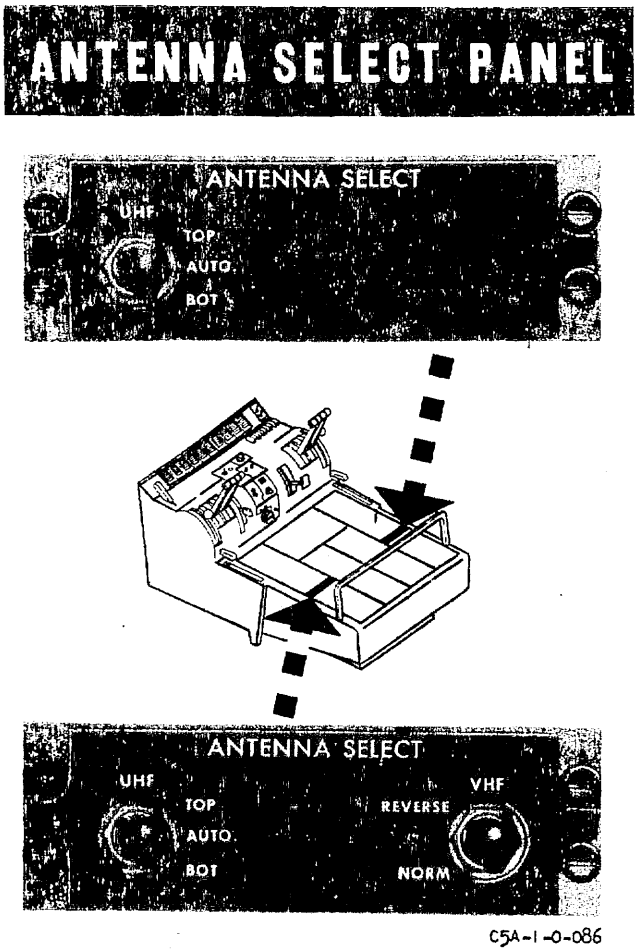
ANTENNA SELECT PANEL
ANTENNA SELECT
UHF
TOP
AUTO
BOT
ANTENNA SELECT
UHF
TOP
AUTO
BOT
REVERSE
NORM
VHF
C5A-1-0-086

Figure 1-88.

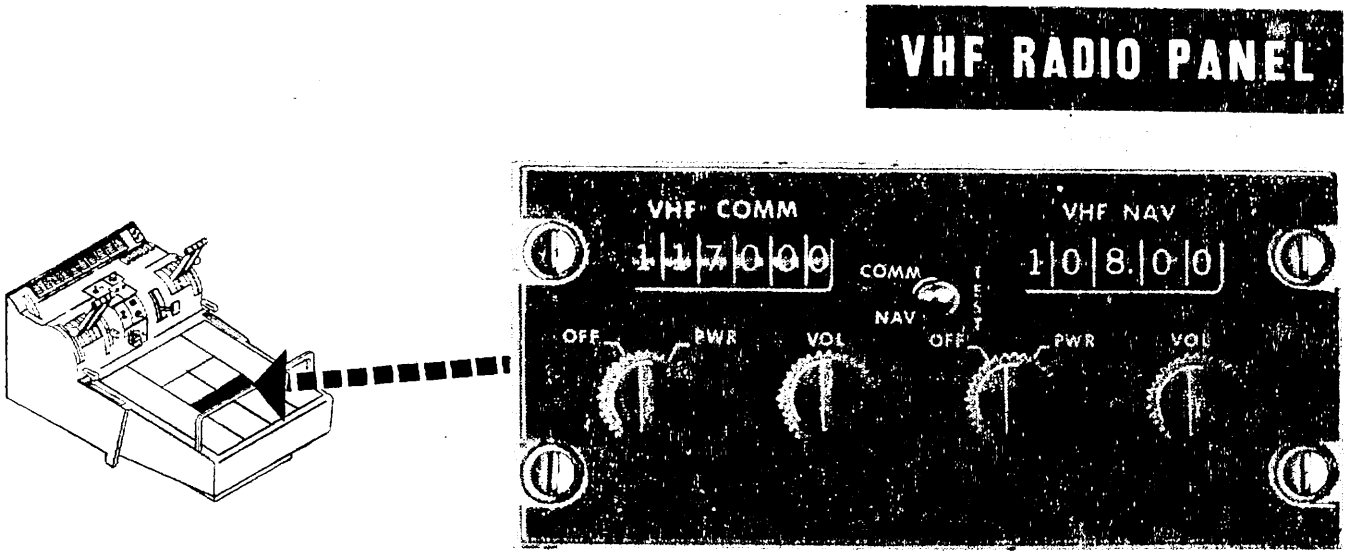

Figure 1-89.

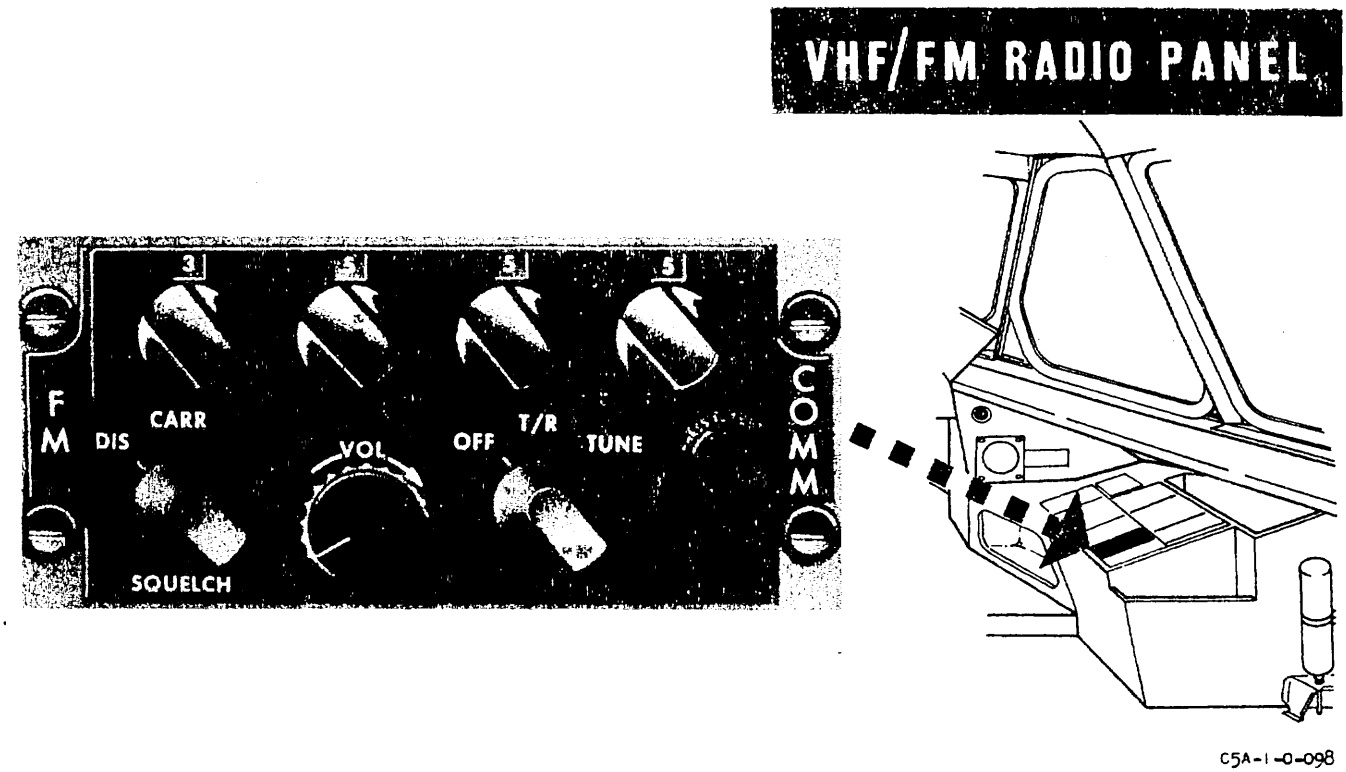

Figure 1-90.

HF LIAISON RADIO PANEL

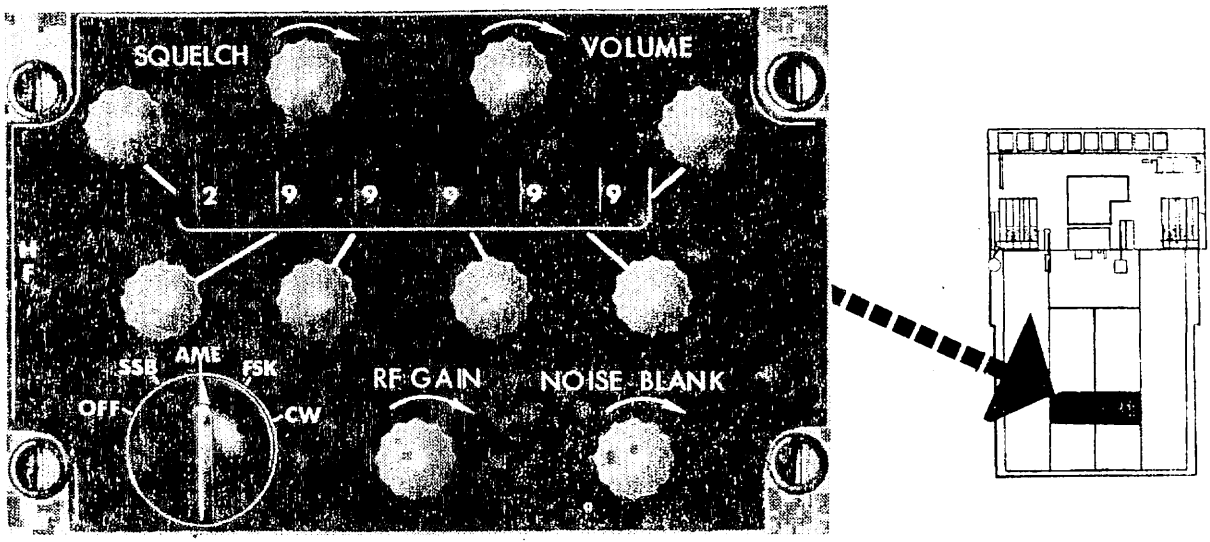

C5A-1-9-090

Figure 1-91.

IFF PANEL

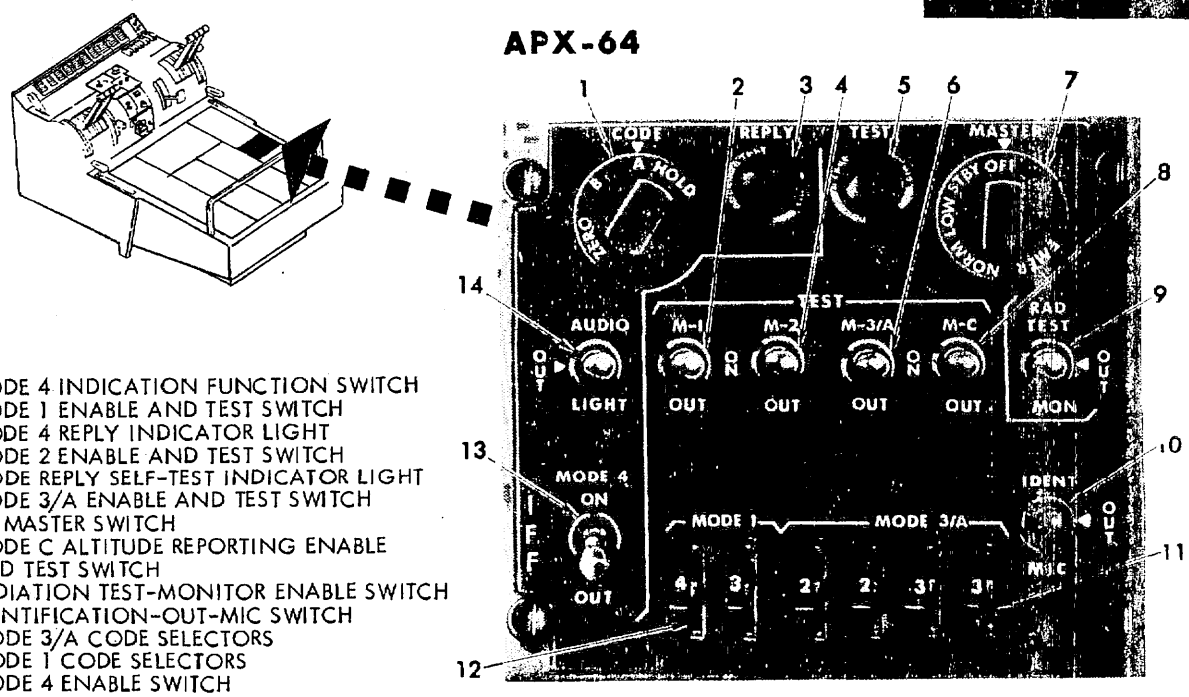

1. MODE 4 INDICATION FUNCTION SWITCH
2. MODE 1 ENABLE AND TEST SWITCH
3. MODE 4 REPLY INDICATOR LIGHT
4. MODE 2 ENABLE AND TEST SWITCH
5. MODE REPLY SELF-TEST INDICATOR LIGHT
6. MODE 3/A ENABLE AND TEST SWITCH
7. IFF MASTER SWITCH
8. MODE C ALTITUDE REPORTING ENABLE AND TEST SWITCH
9. RADIATION TEST-MONITOR ENABLE SWITCH
10. IDENTIFICATION-OUT-MIC SWITCH
11. MODE 3/A CODE SELECTORS
12. MODE 1 CODE SELECTORS
13. MODE 4 ENABLE SWITCH
14. MODE 4 INDICATION SWITCH

C5A-1-X4/0-036

Figure 1-92.

TACAN PANELS

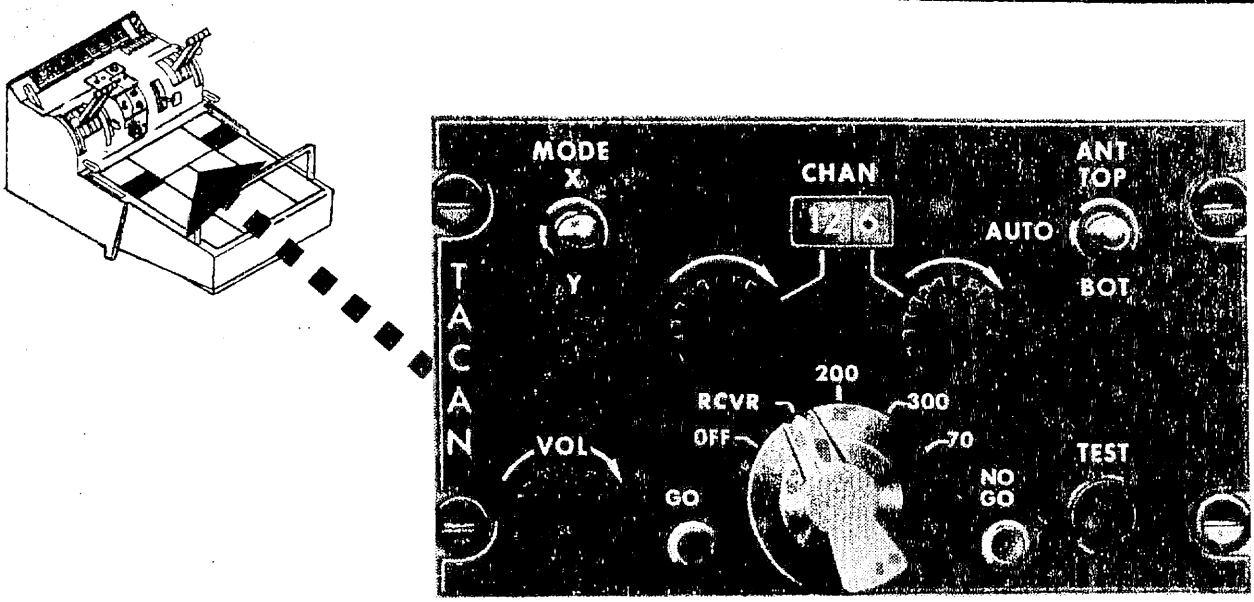

C5A-1-9-085

Figure 1-93.

ADF PANELS

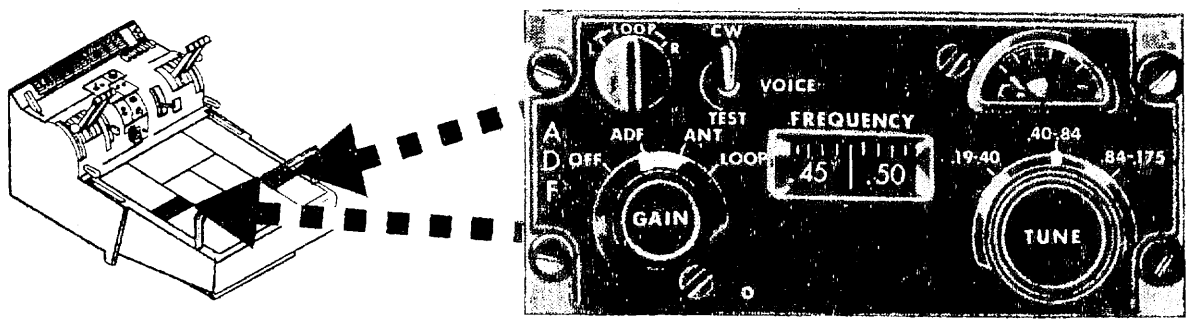

C5A-1-9-088

Figure 1-94.

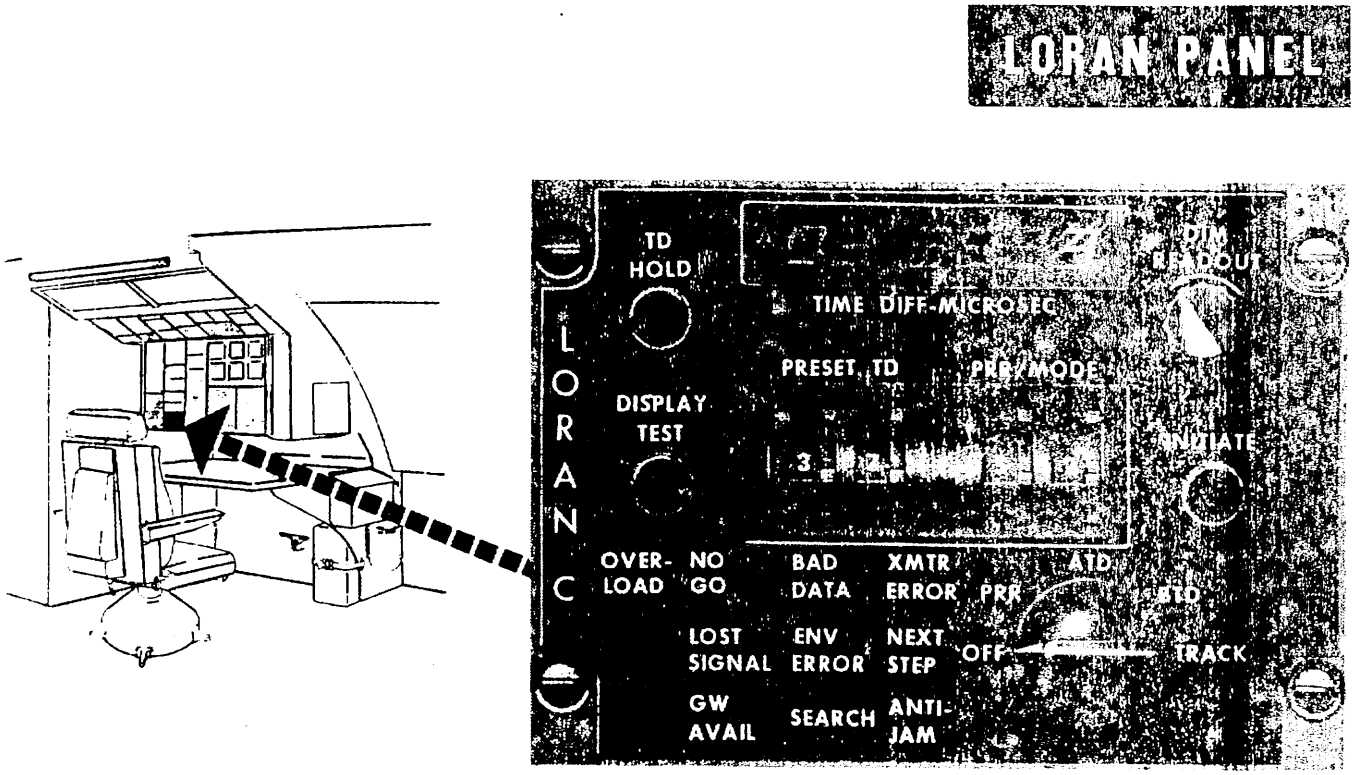

NOTE

THE ALARM LIGHTS ON THE PANEL ARE VISIBLE WHEN ILLUMINATED FROM BEHIND

C5A-1-9-082

Figure 1-95.

IDNE NAVIGATION PROFILES (TYPICAL)

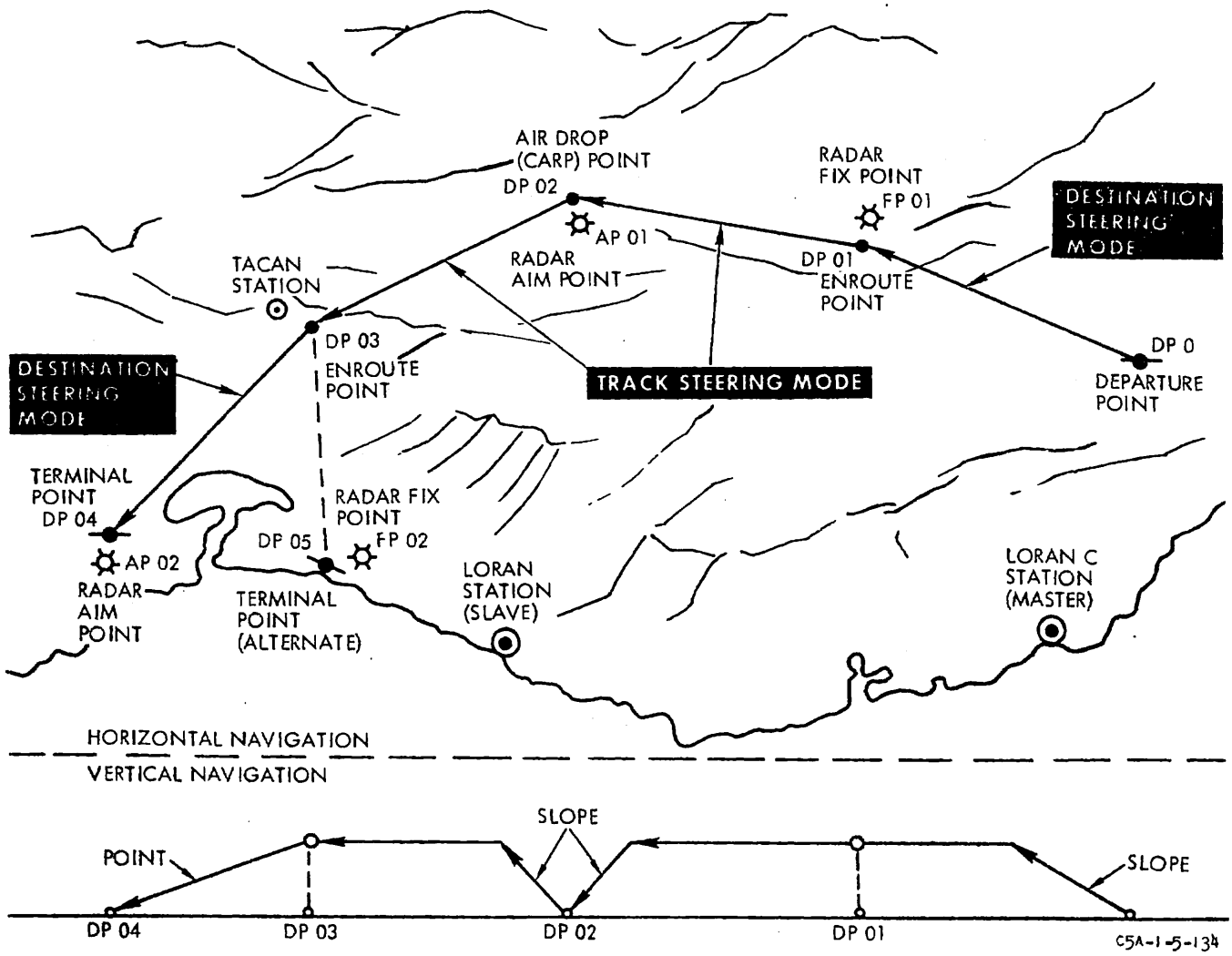

Figure 1-96.

VERTICAL NAVIGATION FLIGHT PROFILE

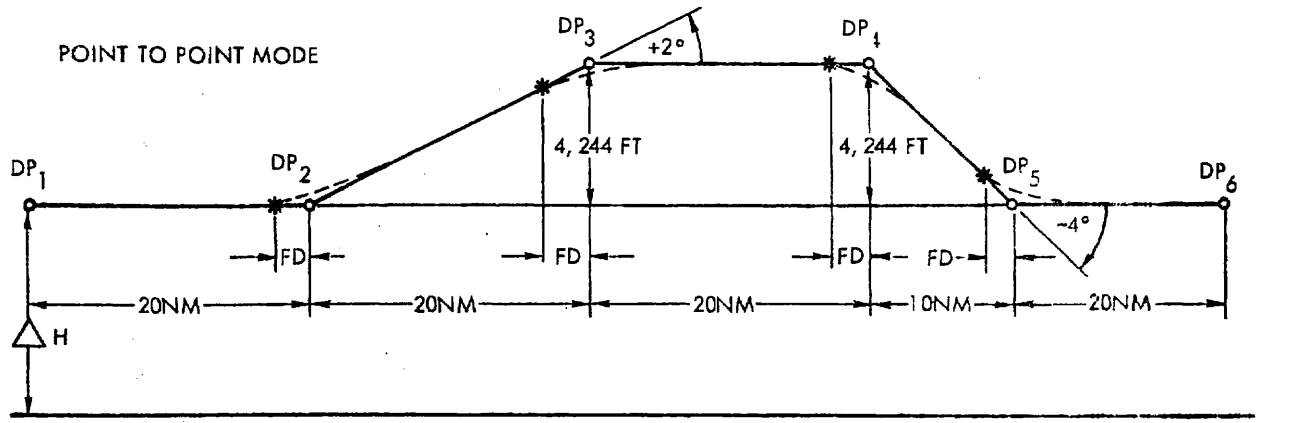

LEGEND (DRAWING NOT SCALED)

—·— FLIGHT PLAN

– – – – AIRPLANE PATH

FD = FLARE DISTANCE

DP_1 TO DP_6 = VERTICAL DESTINATION POINTS (ALL DP'S ARE ON SAME HORIZONTAL STRAIGHT COURSE)

△ H = ALTITUDE

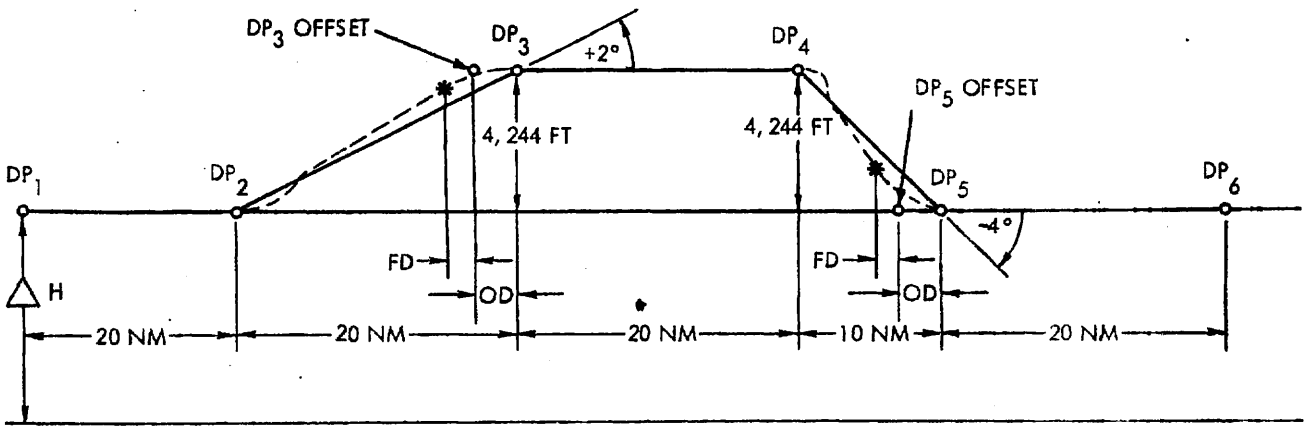

LEGEND (DRAWING NOT SCALED)

——— FLIGHT PLAN

– – – – – AIRPLANE

FD = FLARE DISTANCE

OD = OFFSET DISTANCE

DP_1 TO DP_6 = VERTICAL DESTINATION POINTS (ALL HORIZONTAL DP'S ARE ON SAME STRAIGHT COURSE)

C5A-1-X3/0-190-1

Figure 1-97. (Sheet 1 of 2)

SLOPE MODE

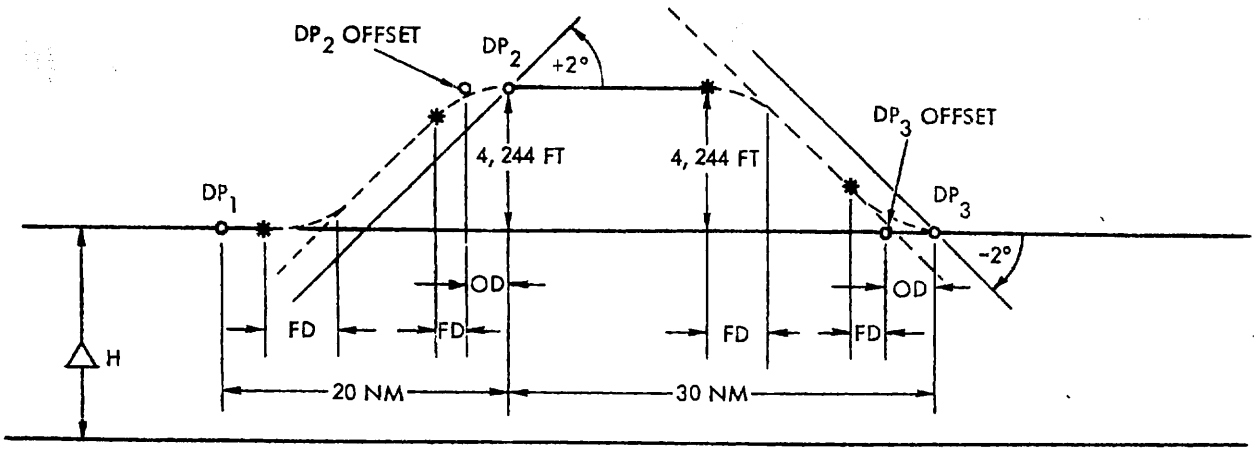

LEGEND (DRAWING NOT SCALE)

——— FLIGHT PLAN

– – – – – AIRPLANE PATH

FD = FLARE DISTANCE

OD = OFFSET DISTANCE

DP_1 TO DP_3 = VERTICAL DESTINATION POINTS

△H = ALTITUDE

VERT NAV ANGLE OFFSET TABLE

FD-NM	V_G-GS	OD-NM	V_G-GS	γ- DEG.
1.67	200	0.26	200	2
		0.84	200	4
2.08	250	0.78	250	2
		1.70	250	2
2.50	300	1.17	300	2
		2.55	300	4
2.92	350	1.82	350	2
		3.41	350	4
3.33	400	2.35	400	2
		4.26	400	4

EXAMPLE

FD = 30 V_G, WHERE V_G IS IN FT/SEC AND FD IS IN FT

OD = $\left[(685V_G - 130,000)(\tan\gamma + 0.2)\right]$ - 4000 IN FT.
WHERE V_G IS IN FT/SEC AND TAN γ IS IN RADIUS

γ = SLOPE ANGLE

V_G = GROUND SPEED IN KNOTS

C5A-1-X3/0-190-2

Figure 1-97. (Sheet 2 of 2)

IDNE FUNCTIONAL GROUPS DIAGRAM

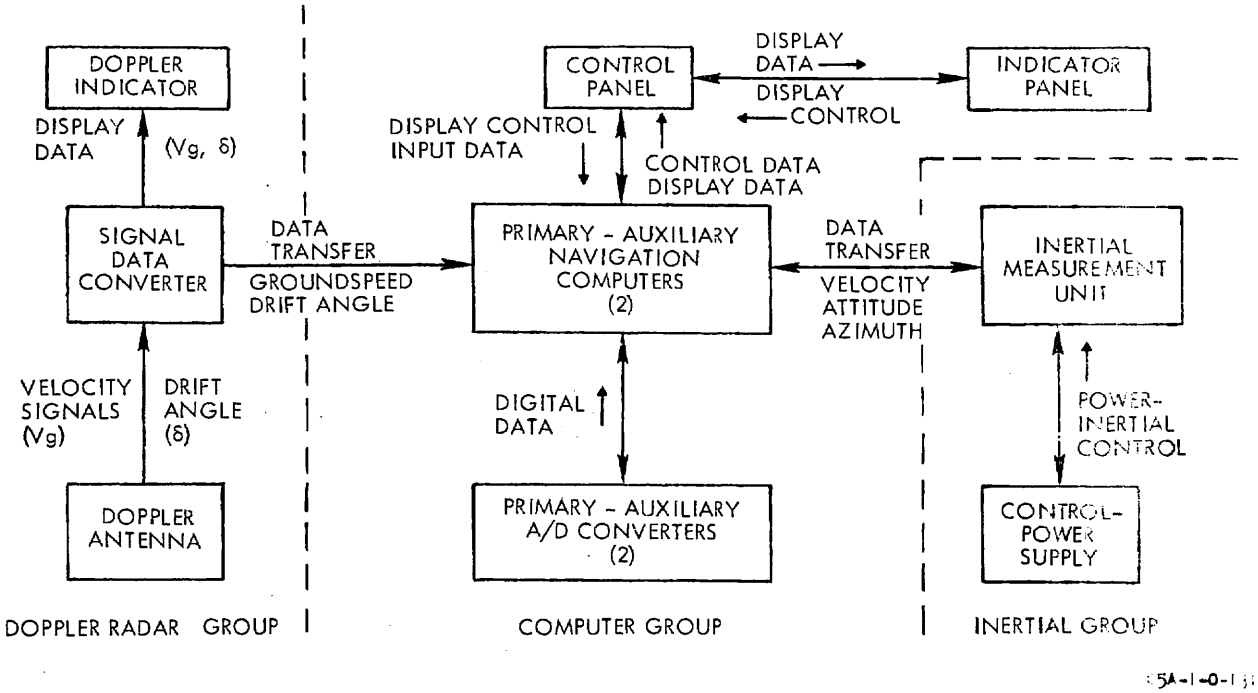

Figure 1-98.

IDNE AND AIRPLANE SYSTEMS INTERFACE

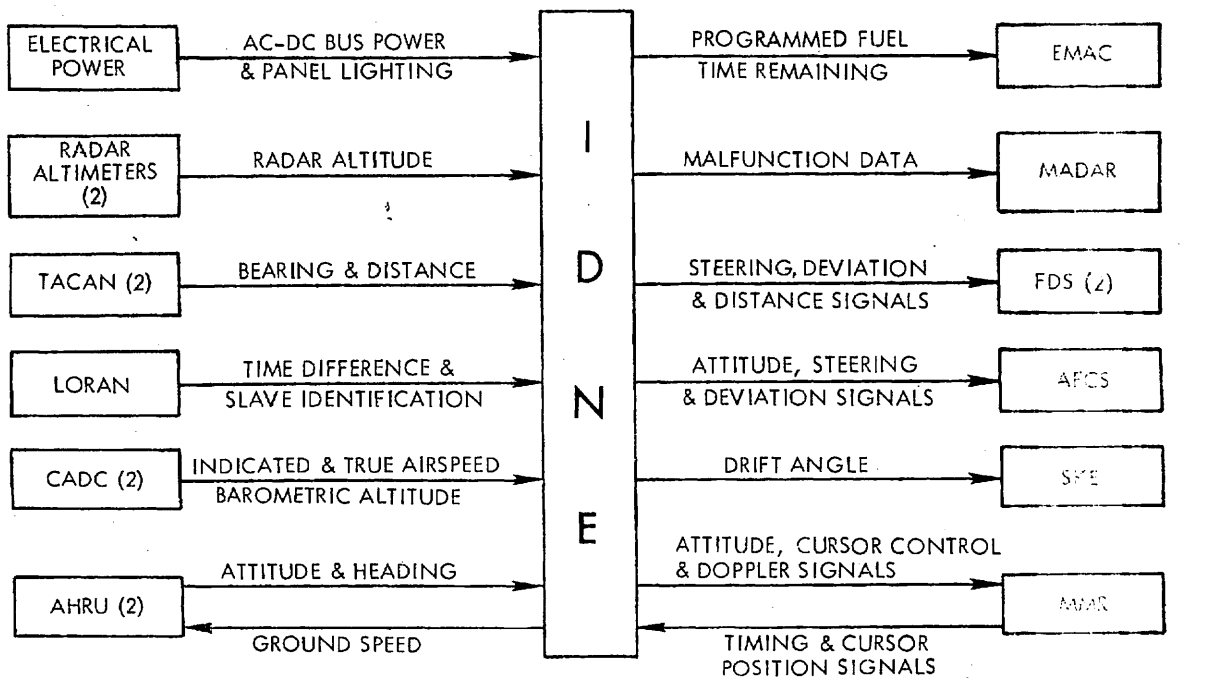

Figure 1-99.

INERTIAL DOPPLER NAV PANELS

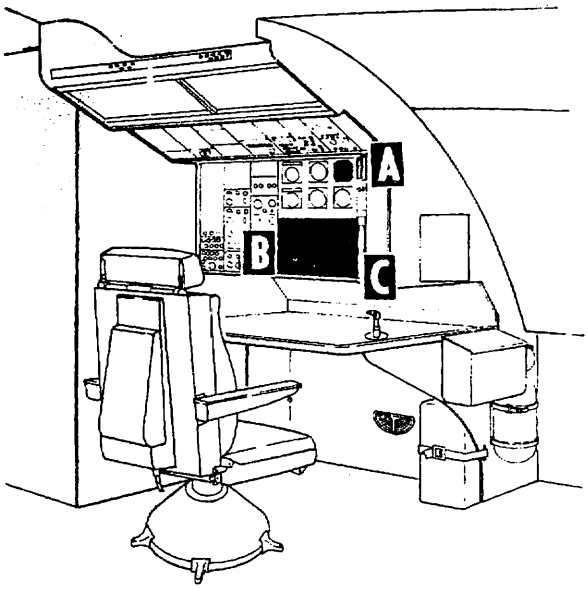

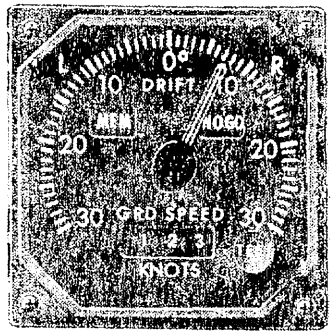

A

DOPPLER INDICATOR

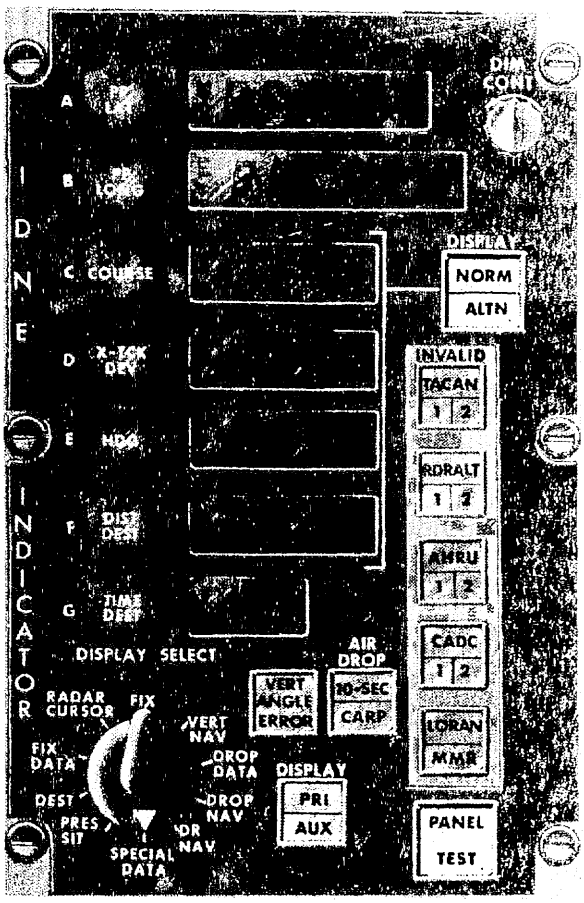

B

IDNE INDICATOR PANEL

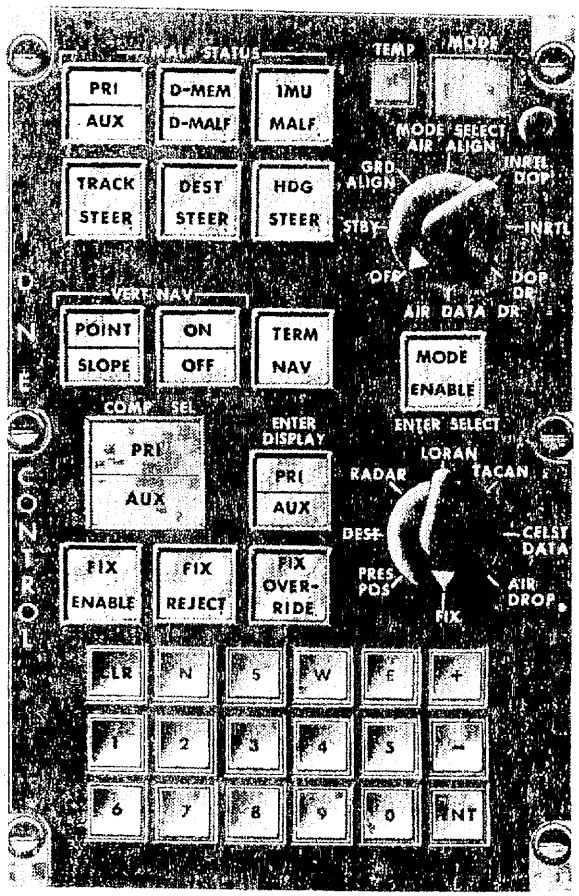

C

IDNE CONTROL PANEL

C5A-1-9-046

Figure 1-100.

IDNE DISPLAY REGISTER DATA TABLE

DATA LINES	PRES SIT		DEST	
	LABEL	DATA FORMAT	LABEL	DATA FORMAT
A	PRS POS LAT	N/S XX°XX.X'	DEST LAT	N/S XX°XX.X'
B	PRS POS LNG	E/W XXX°XX.X'	DEST LNG	E/W XXX°XX.X'
C NORM	DEST COURSE	0XXX.X	DEST COURSE	0XXX.X
C ALTN	DEST COURSE	0XXX.X	FUEL T HRS	00XX.X
D NORM	DEST NO.	00XX0.	DEST NO.	00XX0.
D ALTN	X-TCK DST-NMI	L/R OXXX	DEST ALT-FT	XXXXX
E NORM	GND TCK	0XXX.X	GND TCK	0XXX.X
E ALTN	A/C HDG	U/A XXX.X	A/C HDG	U/A XXX.X
F NORM	DEST DST-NMI	0XXXX	DEST DST-NMI	0XXXX
F ALTN	GS KNOTS	00XXX	GS KNOTS	00XXX
G NORM	DEST-T HRS MIN	X.XX	DEST-T HRS MIN	X.XX
G ALTN	DEST-T HRS MIN	X.XX (CMPTR TIME)		

DATA LINES	FIX		VERT NAV	
	LABEL	DATA FORMAT	LABEL	DATA FORMAT
A	FIX LAT	N/S XX°XX.X'	DEST LAT	N/S XX°XX.X'
B	FIX LNG	E/W XXX°XX.X'	DEST LNG	E/W XXX°XX.X'
C NORM	LAT ERR ARC-MIN	0/-0XX.X	REQD ANG	0/-0XX.X
C ALTN	LAT ERR ARC-MIN	0/-0XX.X	FUEL T HRS	00XX.X
D NORM	LNG ERR ARC-MIN	0/-0XX.X	PRESENT ANG	0/-0XX.X
D ALTN	LNG ERR ARC-MIN	0/-0XX.X	BRG TO FLARE	0XXX.X
E NORM	RADIAL ERR-NMI	0XXX.X	REQD ALT-FT	XXXXX
E ALTN	RADIAL ERR-NMI	0XXX.X	DST-NMI FLARE	00XXX
F NORM	FIX TYPE	00XXX.	PRESENT ALT-FT	XXXXX
F ALTN	FIX TYPE	00XXX.	T-MIN FLARE	00XX.X
G	FIX NO.	XXX	DEST NO.	XX0

C5A-1-XI/2-102-1

Figure 1-101. (Sheet 1 of 7)

DATA LINES	FIX DATA		RADAR CURSOR	
	LABEL	DATA FORMAT	LABEL	DATA FORMAT
A	FIX PT LAT	N/S XX°XX.X'	CSR LAT	N/S XX°XX.X'
B	FIX PT LNG	E/W XXX°XX.X'	CSR LNG	E/W XXX°XX.X'
C NORM	TERR ALT-FT	XXXXX	CSR BRG	0XXX.X
C ALTN	TERR ALT-FT	XXXXX	CSR BRG	0XXX.X
D NORM	CHANNEL NO.	00XXX	CSR RNG N MI	0XXX.X
D ALTN	CHANNEL NO.	00XXX	CSR RNG NMI	0XXX.X
E NORM	T-DELAY μ SECS	XXXXX	A/C HDG	0XXX.X
E ALTN	T-DELAY M μ SECS	00XXX	GND TCK	0XXX.X
F NORM	FIX TYPE	00XXX	RADIAL ERR-NMI	----.-
F ALTN	FIX TYPE	00XXX	RADIAL ERR-NMI	----.-
G	FIX NO.	XXX	RADAR TGT NO.	XX0

DATA LINES	DROP DATA		DROP NAV	
	LABEL	DATA FORMAT	LABEL	DATA FORMAT
A	AIM PT LAT	N/S XX°XX.X'	PRS POS LAT	N/S XX°XX.X'
B	AIM PT LNG	E/W XXX°XX.X'	PRS POS LNG	E/W XXX°XX.X'
C NORM	AP-DZ DST-NMI	XX.XXX	CARP COURSE	0XXX.X
C ALTN	APRCH COURSE	0XXX.X	APRCH COURSE	0XXX.X
D NORM	AP-DZ BRG	XXX.XX	X-TCK DST-NMI	L/R XX.XX
D ALTN	AP-DZ BRG	XXX.XX		
E NORM	PCH DLY SEC	0XX.XX	GND TCK	0XXX.X
E ALTN	WND DIR	0XXX.X	A/C HDG	0XXX.X
F NORM	FALL RT FT/SEC	XXX.XX	CARP DST-NMI	0XXX.X
F ALTN	WND VEL KNOTS	00XXX	GS KNOTS	00XXX
G	DROP NO.	XX0	CARP T MIN SEC	X.XX

C5A-1-X1/2-102-2

Figure 1-101. (Sheet 2 of 7)

DATA LINES	DR NAV		SPECIAL DATA	
	LABEL	DATA FORMAT	LABEL	DATA FORMAT
A	PRS POS LAT	N/S XX°XX.X'		
B	PRS POS LNG	E/W XXX°XX.X'		
C NORM	WND DIR	0XXX.X		
C ALTN	DOP DFT ANG	L/R OXX.X		
D NORM	WND VEL KNOTS	00XXX		
D ALTN	DOP GS KNOTS	L/S XXX.X		
E NORM	AHRU HDG	0XXX.X		
E ALTN	GND TCK	0XXX.X		
F NORM	MAG VAR	0/-0XX.X		
F ALTN	DFT ANG	L/R 0XX.X		
G	T-FIX HRS MIN	-.--		

DATA TABLE ABBREVIATIONS

	ABBREVIATION	DEFINITION
1.	PRS POS LAT	THE LATITUDE OF THE AIRCRAFT'S PRESENT POSITION.
2.	PRS POS LNG	THE LONGITUDE OF THE AIRCRAFT'S PRESENT POSITION.
3.	DEST COURSE	THE INSTANTANEOUS COURSE MEASURED FROM THE PRESENT POSITION TO THE DESTINATION WITH EXCEPTION OF TRUE COURSE MEASUREMENT BETWEEN TWO DESTINATION POINTS WHEN IN TRACK STEER MODE AND PRESENT SITUATION DISPLAY IS SELECTED.
4.	DEST NO.	THE NUMBER OF THE DESIGNATED DESTINATION POINT.
5.	X-TCK DST-NMI	THE PERPENDICULAR DISTANCE FROM THE INTENDED GREAT CIRCLE PATH TO THE PRESENT POSITION OF THE AIRCRAFT IN NAUTICAL MILES.
6.	GND TCK	THE ACTUAL GROUND TRACK (TRACK MADE GOOD).
7.	A/C HDG	THE ANGLE FROM TRUE NORTH MEASURED CW TO THE LONGITUDINAL AXIS OF THE AIRCRAFT.
8.	DEST DST-NMI	THE DISTANCE FROM THE AIRCRAFT TO THE DESIGNATED DESTINATION POINT IN NAUTICAL MILES.

C5A-1-X1/2-102-3

Figure 1-101. (Sheet 3 of 7)

DATA TABLE ABBREVIATIONS

	ABBREVIATION	DEFINITION
9.	GS-KNOTS	THE GROUND SPEED OF THE AIRCRAFT IN KNOTS.
10.	DEST-T-HRS MIN.	THE TIME TO THE DESIGNATED DESTINATION POINT IN HOURS AND MINUTES.
11.	DEST LAT	THE LATITUDE OF THE DESIGNATED DESTINATION POINT.
12.	DEST LNG	THE LONGITUDE OF THE DESIGNATED DESTINATION POINT.
13.	FUEL-T-HRS	THE PROGRAMMED FUEL TIME REMAINING FOR THE FLIGHT IN HOURS.
14.	DEST ALT-FT	THE ALTITUDE ABOVE SEA LEVEL OF THE DESIGNATED DESTINATION POINT IN FEET.
15.	FIX PT LAT	THE LATITUDE OF THE DESIGNATED FIX POINT.
16.	FIX PT LNG	THE LONGITUDE OF THE DESIGNATED FIX POINT.
17.	TERR ALT-FT.	THE ALTITUDE OF THE TERRAIN ABOVE SEA LEVEL AT THE FIX POINT IN FEET.
18.	CHANNEL NO.	THE CHANNEL NUMBER OF THE TACAN STATION.
19.	T-DELAY μ-SECS	THE MICROSECONDS PART OF THE TIME DELAY FROM THE LORAN SLAVE TO THE LORAN MASTER.
20.	T-DELAY Mμ-SECS	THE MILLIMICROSECONDS PART OF THE TIME DELAY FROM THE LORAN SLAVE TO THE LORAN MASTER.
21.	FIX TYPE	THE TYPE OF FIX POINT, NAMELY, RADAR, LORAN, TACAN, OR EXTERNAL AND THE VARIANCE ASSOCIATED WITH THE POSITION OF THE FIX POINT.
22.	FIX NO.	THE NUMBER OF THE DESIGNATED FIX POINT.
23.	CSR LAT	THE LATITUDES OF THE MMR CURSOR.

C5A-1-6-102-4

Figure 1-101. (Sheet 4 of 7)

DATA TABLE ABBREVIATIONS

	ABBREVIATION	DEFINITION
24.	CSR LNG	THE LONGITUDE OF THE MMR CURSOR.
25.	CSR BRG	THE BEARING OF THE MMR CURSOR CW FROM THE AIRCRAFT LONGITUDINAL AXIS.
26.	CRS RNG-NMI	THE RANGE OF THE MMR CURSOR FROM THE COMPUTED POSITION OF THE AIRCRAFT TO THE FIX POINT, DESTINATION POINT, OR RECON POINT IN NAUTICAL MILES.
27.	RADIAL ERR-NMI	THE ERROR IN DISTANCE BETWEEN THE MMR CURSORS AND THE COMPUTED POSITION OF THE FIX POINT OR DESTINATION POINT IN NAUTICAL MILES.
28.	RADAR TGT NO.	THE NUMBER OF THE FIX POINT OR DESTINATION POINT THAT IT IS DESIRED TO TRACK WITH THE MMR.
29.	FIX LAT	THE LATITUDE OF THE AIRCRAFT AS DETERMINED BY THE FIXPOINT MEASUREMENT.
30.	FIX LNG	THE LONGITUDE OF THE AIRCRAFT AS DETERMINED BY THE FIXPOINT MEASUREMENT.
31.	LAT ERR-ARC MIN	THE DIFFERENCE BETWEEN THE AIRCRAFT'S LATITUDE AS DETERMINED BY THE FIX MEASUREMENT AND THE LATITUDE AS DETERMINED BY THE IDNE COMPUTERS IN MINUTES OF ARC.
32.	LNG ERR ARC MIN	THE DIFFERENCE BETWEEN THE AIRCRAFT'S LONGITUDE AS DETERMINED BY THE FIX MEASUREMENT AND THE LONGITUDE AS DETERMINED BY THE IDNE COMPUTERS.
33.	REQD ANG	THE ANGLE REQUIRED TO REACH A SPECIFIED ALTITUDE AS DETERMINED BY THE POINT OR SLOPE MODES OF VERTICAL NAVIGATION. THE ANGLE IS MEASURED POSITIVE FROM THE LOCAL HORIZONTAL DOWN TO THE SLOPE AT THE CURRENT DESTINATION POINT.
34.	PRESENT ANG	THE INSTANTANEOUS PRESENT GLIDE ANGLE OF THE AIRCRAFT WITH RESPECT TO THE LOCAL HORIZONTAL.
35.	BRG TO FLARE	THE BEARING OF THE NEXT TRACK WITH RESPECT TO TRUE NORTH. IN THE CASE OF A LANDING OPERATION IT IS THE HEADING OF THE RUN WAY WITH RESPECT TO MAGNETIC NORTH.
36.	REQD ALT-FT	THE REQUIRED ALTITUDE OF THE AIRCRAFT AT THE CURRENT DESTINATION POINT IN FEET.
37.	DST NMI FLARE	THE DISTANCE FROM THE AIRCRAFT TO THE START OF THE FLARE MEASURED IN NAUTICAL MILES.
38.	PRESENT ALT-FT	THE INSTANTANEOUS ALTITUDE OF THE AIRCRAFT ABOVE SEA LEVEL IN FEET.

C5A-1-6-102-5

Figure 1-101. (Sheet 5 of 7)

DATA TABLE ABBREVIATIONS

	ABBREVIATION	DEFINITION
39.	T-MIN FLARE	THE TIME IN MINUTES BEFORE THE AIRCRAFT REACHES THE POINT TO BEGIN THE FLARE TO THE CURRENT DESTINATION POINT OR AIM POINT.
40.	AIM PT LAT	THE LATITUDE OF THE AIM POINT.
41.	AIM PT LNG	THE LONGITUDE OF THE AIM POINT.
42.	AP-DZ DST-NMI	THE DISTANCE FROM AIM POINT TO THE DROP ZONE POINT OF IMPACT IN NAUTICAL MILES.
43.	APRCH COURSE	THE REQUIRED APPROACH COURSE THAT THE AIRCRAFT MUST FLY TO CARP MEASURED CW WITH RESPECT TO TRUE NORTH.
44.	AP-DZ BRG	THE BEARING MEASURED CW FROM TRU NORTH TOTHE AP-DZ LINE AT THE AP.
45.	PCH DLY-SEC	THE DELAY TIME FROM THE MOMENT OF RELEASE OF THE PARACHUTE TO THE TIME THAT IT IS FULLY DEPLOYED IN SECONDS.
46.	WND DIR	THE DIRECTION FROM WHICH THE WIND IS COMING.
47.	FALL RT-FT/SEC	THE VERTICAL COMPONENT OF THE VELOCITY OF THE PARACHUTE AFTER IT IS FULLY DEPLOYED IN FEET/SECONDS.
48.	WND VEL-KNOTS	THE SPEED OF THE WIND IN KNOTS.
49.	DROP NO.	THE NUMBER OF THE DESIGNATED AIM POINT.
50.	CARP COURSE	THE COURSE REQUIRED BY THE AIRCRAFT TO REACH CARP REFERENCED WITH RESPECT TO TRUE NORTH.
51.	CARP DST-MNI	THE DISTANCE FROM THE PRESENT POSITION OF THE AIRCRAFT TO CARP IN NAUTICAL MILES.
52.	CARP-T-MIN/SEC	THE TIME BEFORE THE AIRCRAFT REACHES CARP IN MINUTES AND SECONDS.
53.	DOP DFT ANG	THE ANGLE MEASURED CW FROM THE DOPPLER ANTENNA TO THE LONGITUDINAL AXIS IS POSITIVE AND THE ANGLE MEASURED CCW FROM THE DOPPLER ANTENNA TO THE LONGITUDINAL AXIS IS NEGATIVE.

C5A-1-8-102-6

Figure 1-101. (Sheet 6 of 7)

DATA TABLE ABBREVIATIONS		
ABBREVIATION		DEFINITION
54.	AHRU HDG	THE TRUE HEADING OF THE AIRPLANE WITH RESPECT TO THE AHRU REFERENCE ADJUSTED FOR VARIATION.
55.	MAG VAR	THE ANGLE MEASURED CW FROM TRUE NORTH TO MAGNETIC NORTH AT THE AIRCRAFT'S PRESENT POSITION.
56.	DFT ANG	THE CW ANGLE FROM THE ACTUAL TRACK (TRACK MADE GOOD) TO THE LONGITUDINAL AXIS OF THE AIRCRAFT AS DETERMINED BY THE IMU IS POSITIVE.
57.	DOP GS - KNOTS	DOPPLER GROUND SPEED IN KNOTS.

C5A-1-3-102-7

Figure 1-101. (Sheet 7 of 7)

IDNE PANEL TEST PROGRAM CONFIGURATIONS

INDICATOR LIGHTS ON

Control Panel		Indicator Panel	
Light	Color	Light	Color
D - Mem	Amber	A. N/S 888888	
D - Malf	Red	B. E/W 8888888	
IMU - Malf	Red	C. 88888	
Temp	Red	D. 88888	
Mode	Indeterminate	E. 88888	
Track Steer	Green	F. 88888	
Dest. Steer	Green	G. 888	
Hdg. Steer	Green	Display NORM	White
		Display ALTN	White
If Vert Nav ON,			
Vert Nav ON	White		
Vert Nav OFF	Dark		
Vert Nav Point	White		
Vert Nav Slope	Dark		
If Vert Nav OFF,			
Vert Nav ON	White		
Vert Nav OFF	Dark	Invalid Lights	
Vert Nav Point	Dark	TACAN 1 & 2	Red
Vert Nav Slope	Dark	RAD ALT 1 & 2	Red
Term Nav	Green	AHRU 1 & 2	Red
Enter Display-Pri	White	CADC 1 & 2	Red
Enter Display-Aux	Dark	LORAN	Red
Fix Enable	Green	MMR	Red
Fix Reject	Amber	Vert Ang Error	Red
Fix Override	Green	Air Drop 10-Sec	White
Enter	White	Air Drop Carp	Green
		Display Pri	White
Malf Status-Pri	Not Affected	Display Aux	White
Malf Status-Aux	Not Affected		
Comp Sel-Pri	Not Affected	The projection windows for A-G data registers are not affected.	
Comp Sel-Aux	Not Affected		

TBLC5A-1-X2/0-501-1

Figure 1-102. (Sheet 1 of 2)

INDICATOR LIGHTS OFF

Control Panel		Indicator Panel	
Light	Color	Light	Color
D - Mem	Dark	A. Blank (Dark)	
D - Malf	Dark	B. Blank	
IMU - Malf	Dark	C. Blank	
Temp	Dark	D. Blank	
Mode	Blank	E. Blank	
Track Steer	White	F. Blank	
Dest Steer	White	G. Blank	
Hdg Steer	White	Display NORM	Dark
		Display ALTN	Dark
If Vert Nav ON			
Vert Nav ON	Dark		
Vert Nav OFF	White		
Vert Nav Point	Dark		
Vert Nav Slope	White		
If Vert Nav OFF			
Vert Nav ON	Dark		
Vert Nav OFF	White		
Vert Nav Point	Dark	Invalid Lights	
Vert Nav Slope	Dark	Tacan 1 & 2	Dark
		RAD ALT 1 & 2	Dark
Term Nav	White	AHRU 1 & 2	Dark
Enter Display-Pri	Dark	CADC 1 & 2	Dark
Enter Display-Aux	White	LORAN	Dark
Fix Enable	White	MMR	Dark
Fix Reject	White	Vert Angle Error	Dark
Fix Override	White	Air Drop 10-Sec	Dark
Enter	Dark	Air Drop CARP	Dark
		Display Pri	Dark
Malf Status-Pri	Not Affected	Display Aux	Dark
Malf Status-Aux	Not Affected		
Comp Sel-Pri	Not Affected	The projection windows for A-G data registers are not affected.	
Comp Sel-Aux	Not Affected		

TBLC5A-(1)-XI/0-501-2

Figure 1-102. (Sheet 2 of 2)

BDHI SYSTEM INDICATORS AND SELECTOR SWITCHES

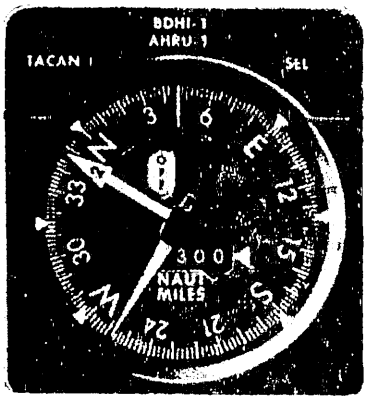

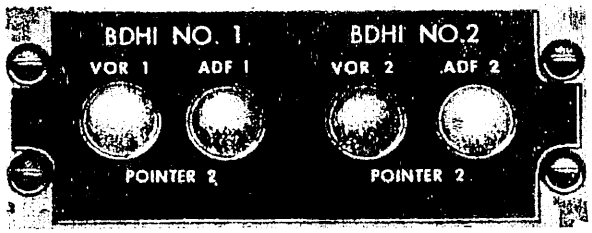

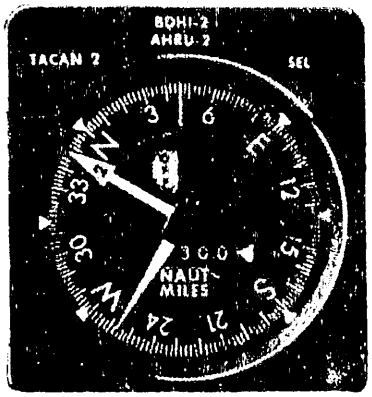

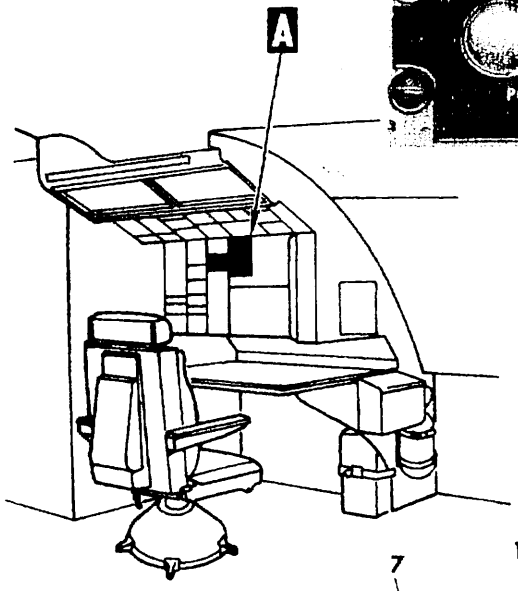

A

NAVIGATOR'S INSTRUMENT PANEL

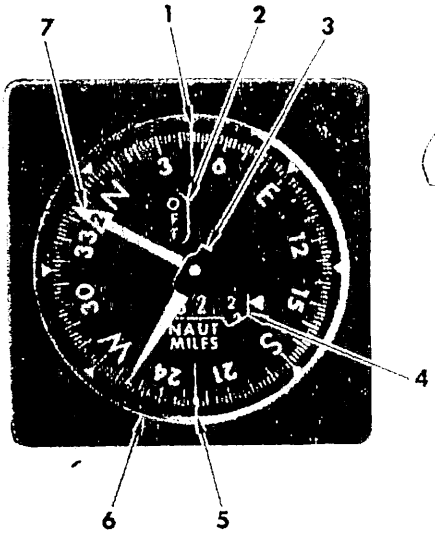

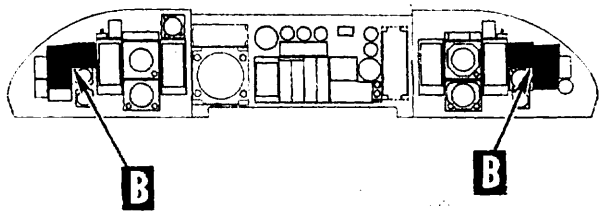

1. TOP INDEX (LUBBER LINE)
2. BDHI POWER OFF WARNING FLAG
3. NO. 1 BEARING POINTER
4. DISTANCE INDICATOR
5. BOTTOM INDEX (LUBBER LINE)
6. COMPASS CARD
7. NO. 2 BEARING POINTER

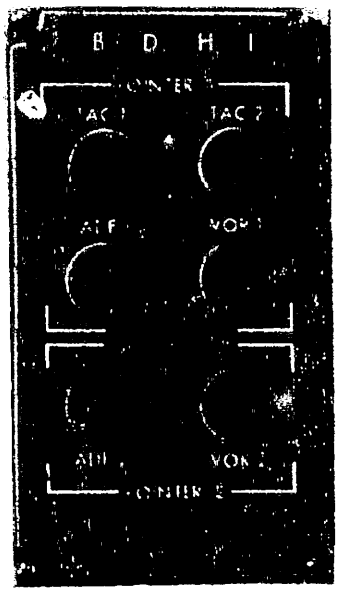

B

PILOT'S INSTRUMENT PANEL
(COPILOT'S OPPOSITE)

C5A-1-X2/0-047

Figure 1-103.

MULTI-MODE RADAR PANELS

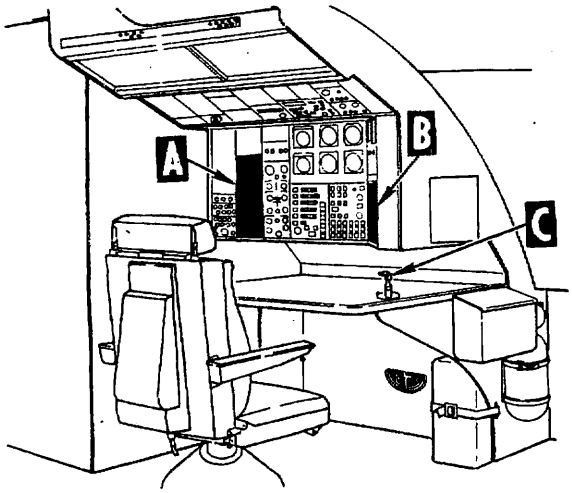

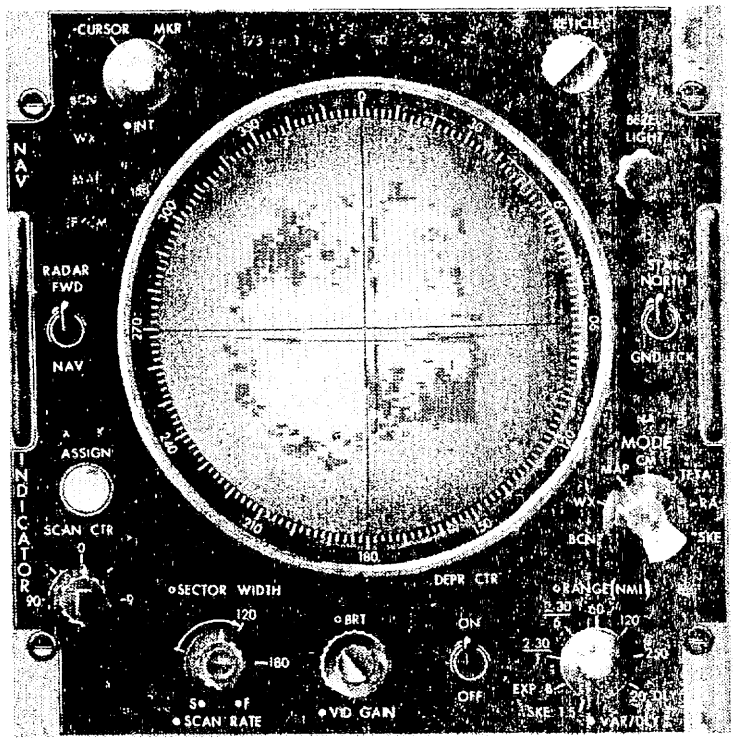

NAVIGATOR'S MULTI-MODE RADAR INDICATOR

B

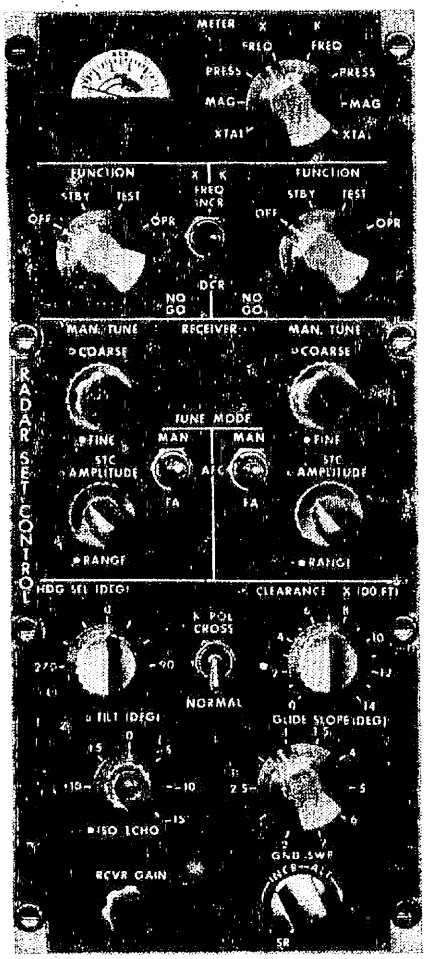

NAVIGATOR'S MULTI-MODE RADAR SET CONTROL PANEL

A

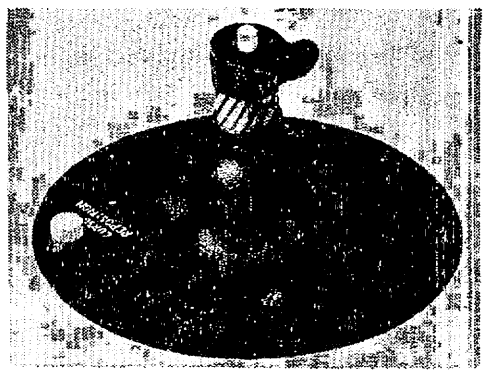

RADAR CURSOR CONTROL HANDLE

C

C5A-1-XI/0-044-1

Figure 1-104. (Sheet 1 of 2)

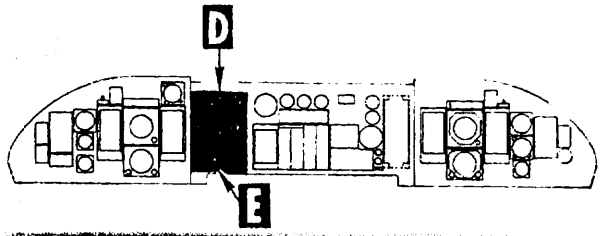

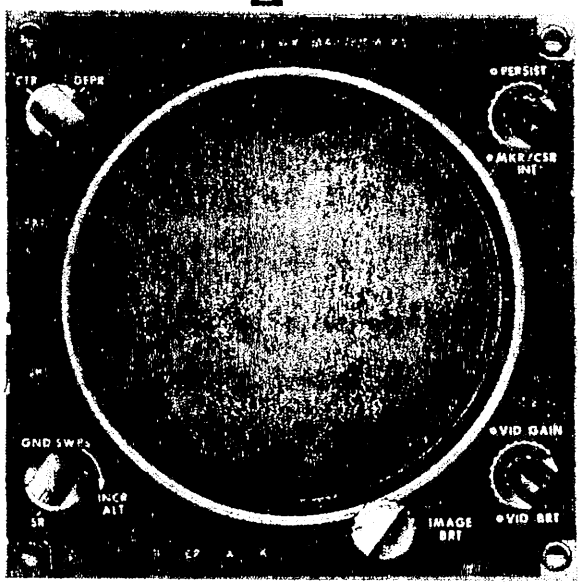

PILOTS' MULTI-MODE RADAR INDICATOR

8.2

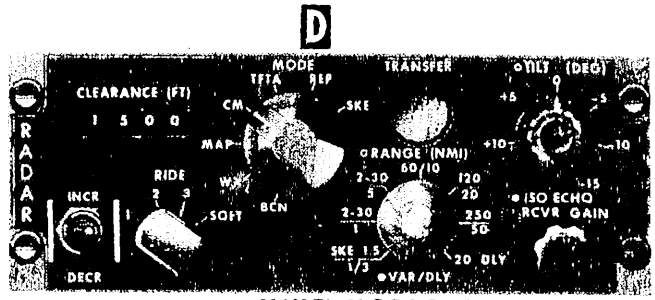

PILOTS' MULTI-MODE RADAR CONTROL PANEL

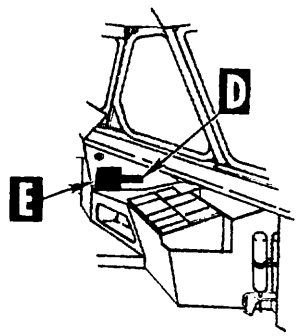

E

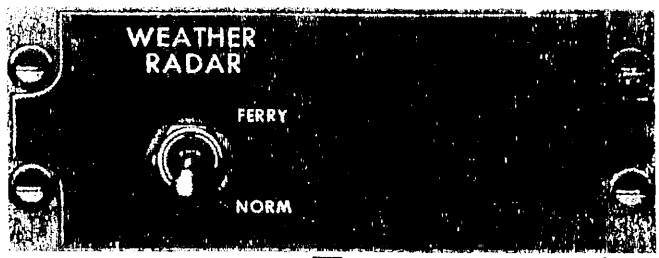

F

63.

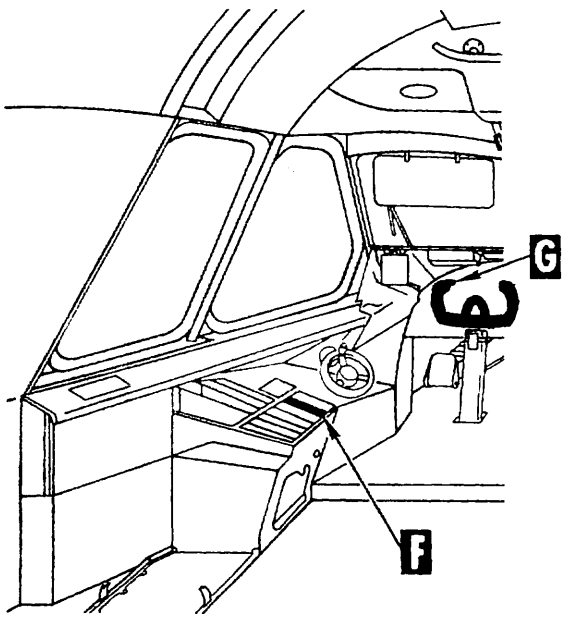

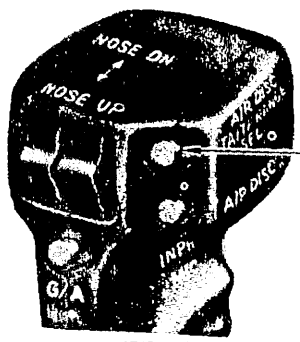

TF/TA RANGE SELECT SWITCH (COPILOT OPPOSITE)

G

C5A-1-X2/0-044-2

Figure 1-104. (Sheet 2 of 2)

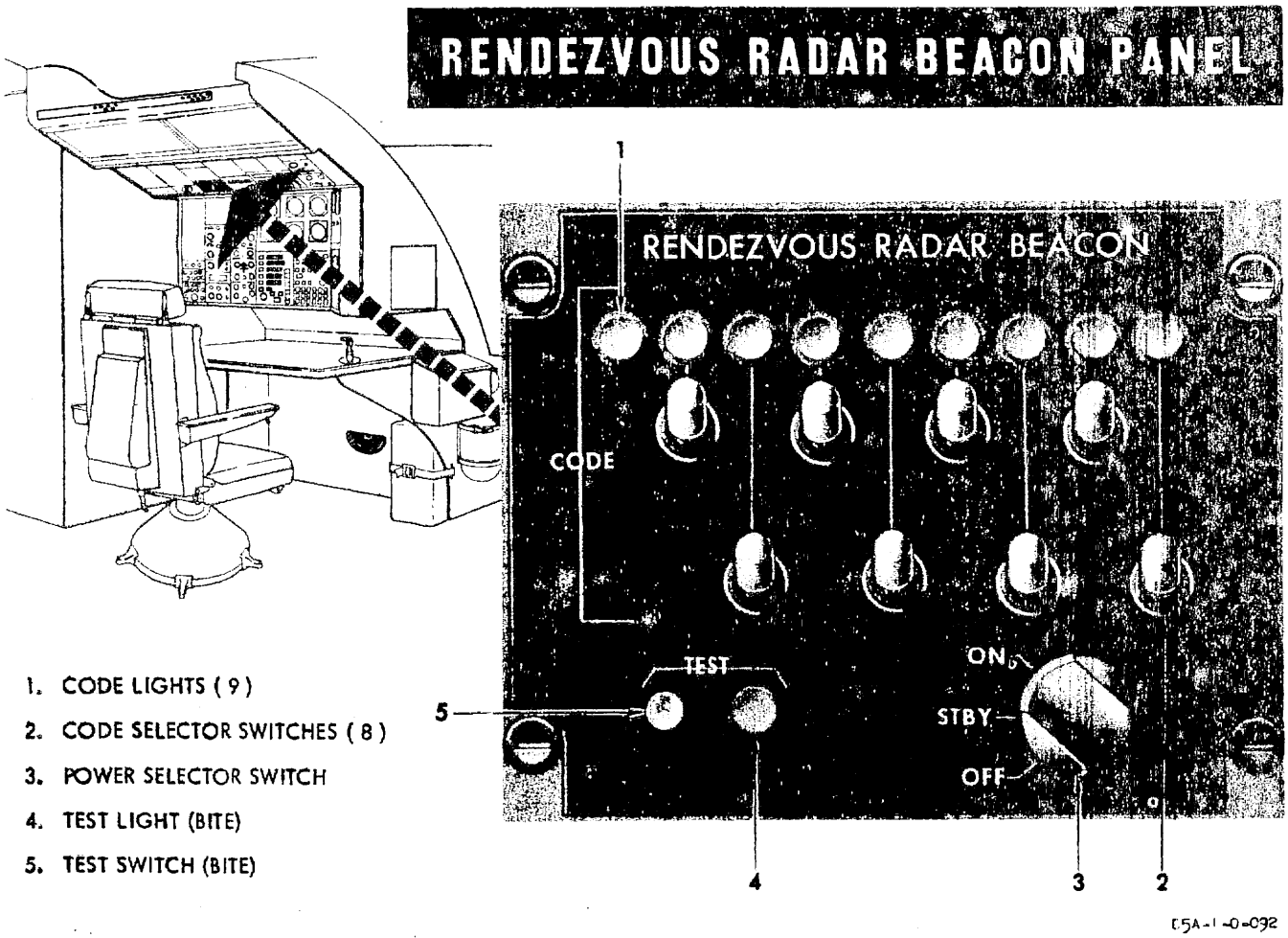

1. CODE LIGHTS (9)
2. CODE SELECTOR SWITCHES (8)
3. POWER SELECTOR SWITCH
4. TEST LIGHT (BITE)
5. TEST SWITCH (BITE)

Figure 1-105.

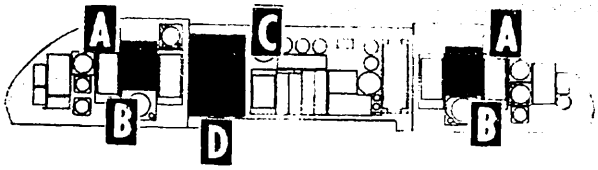

STATION KEEPING EQUIPMENT

SKE RANGE INDICATOR

A

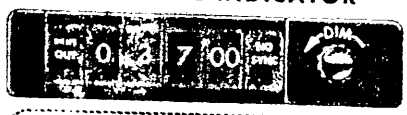

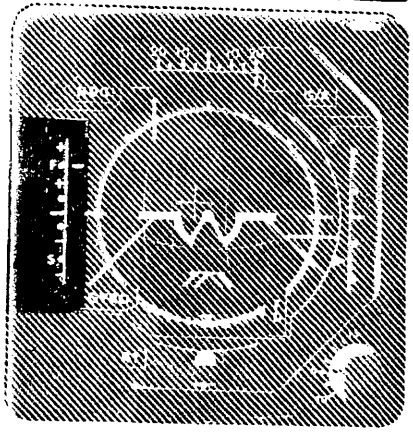

B

FAST SLOW INDICATOR

ADI

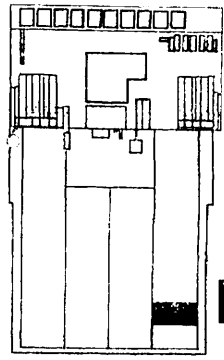

E

E

STATION KEEPING CONTROL PANEL

RADAR CONTROLS

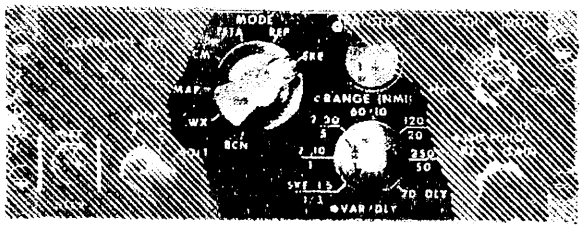

G

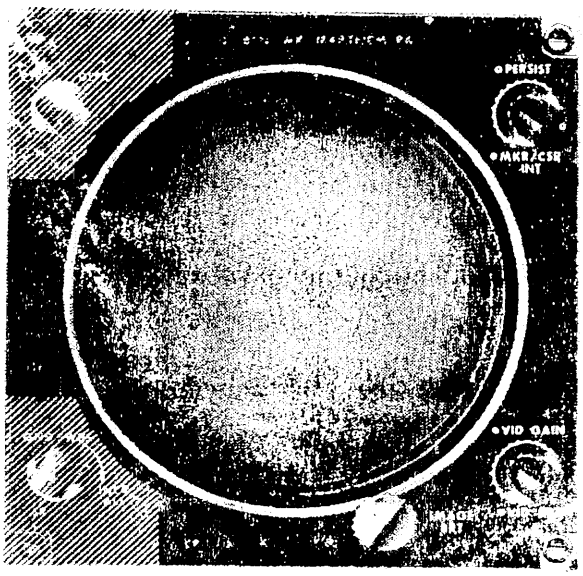

D

PILOT'S MULTI-MODE RADAR INDICATOR

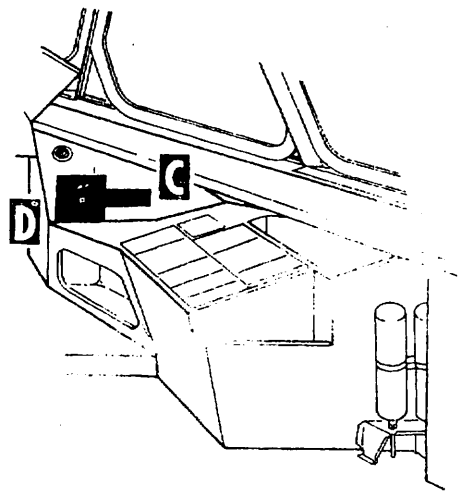

C5A-1-X1/0-058-1

Figure 1-106. (Sheet 1 of 2)

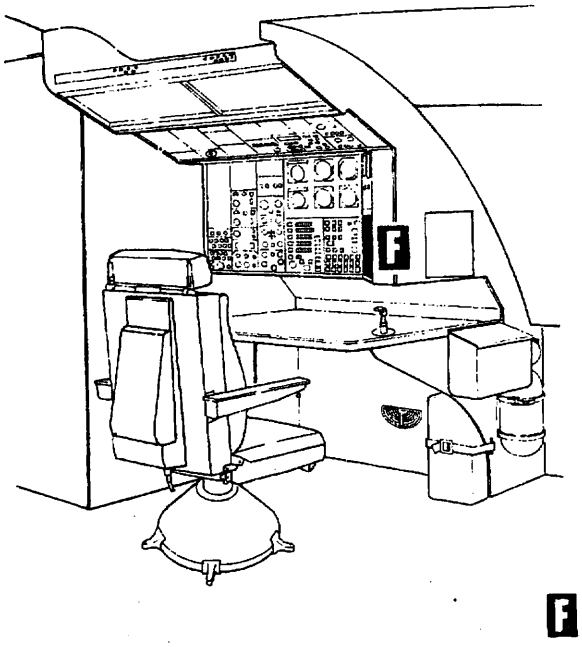

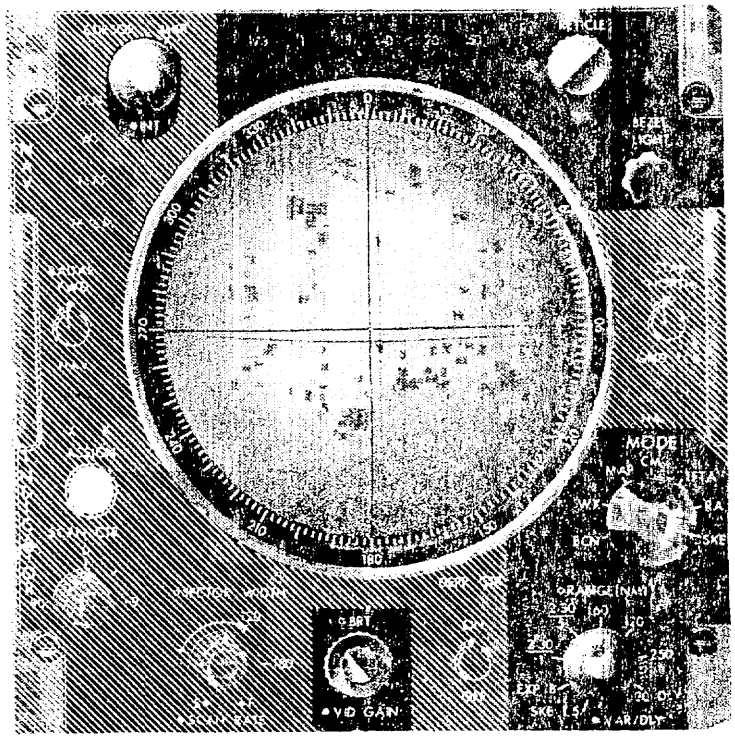

NAVIGATOR'S MULTI-MODE RADAR INDICATOR

C5A-1-X1/0-058-2

Figure 1-106. (Sheet 2 of 2)

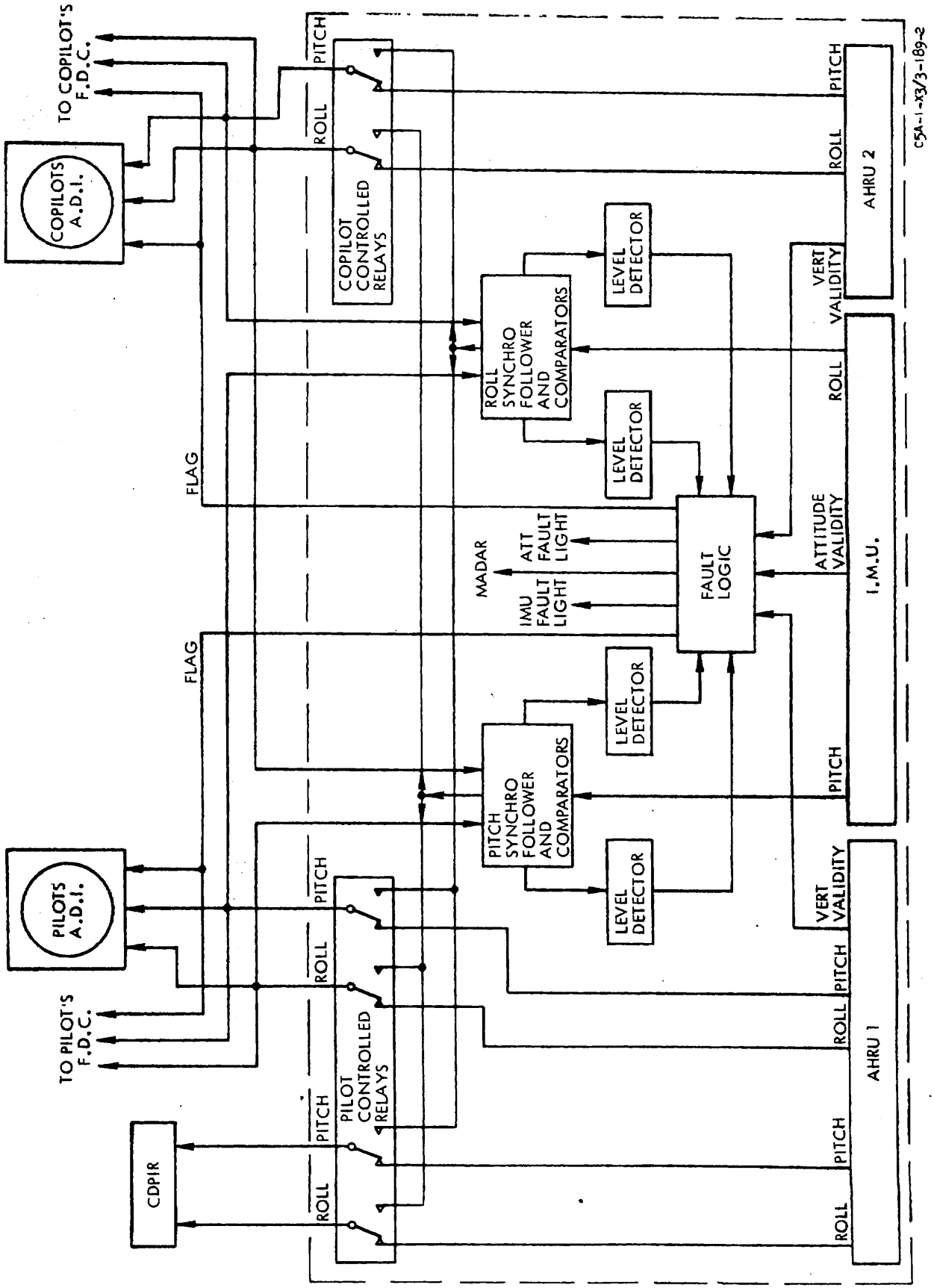

Figure 1-108. (Sheet 2 of 2)

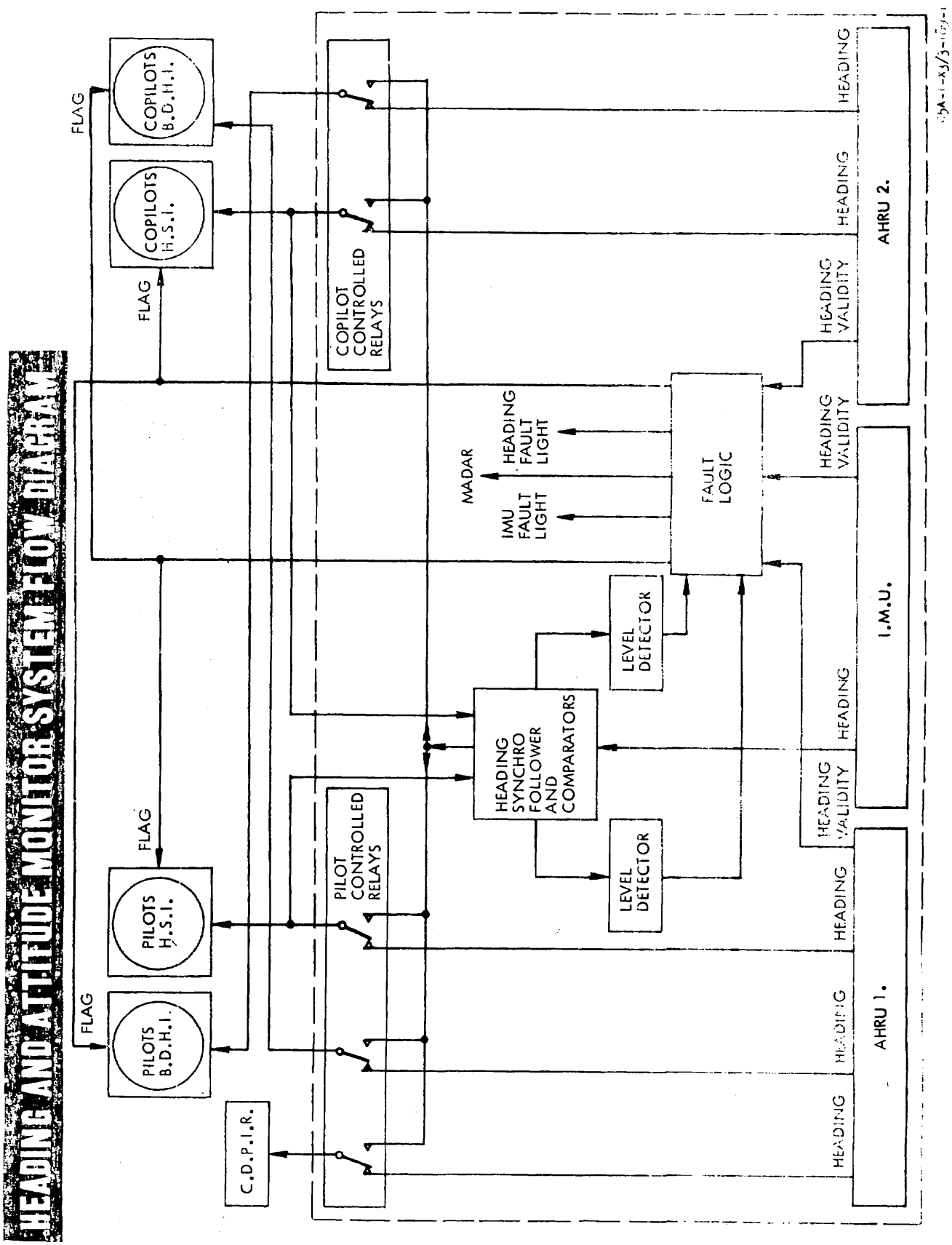

Figure 1-108. (Sheet 1 of 2)

INTEGRATED FLIGHT INSTRUMENT SYSTEM

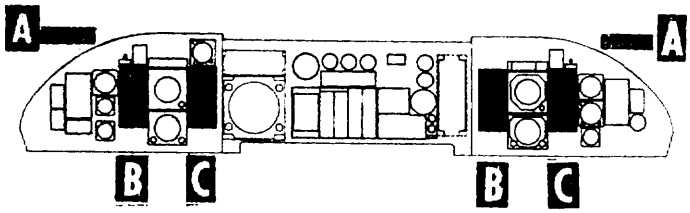

PERIPHERAL COMMAND INDICATOR (PCI)

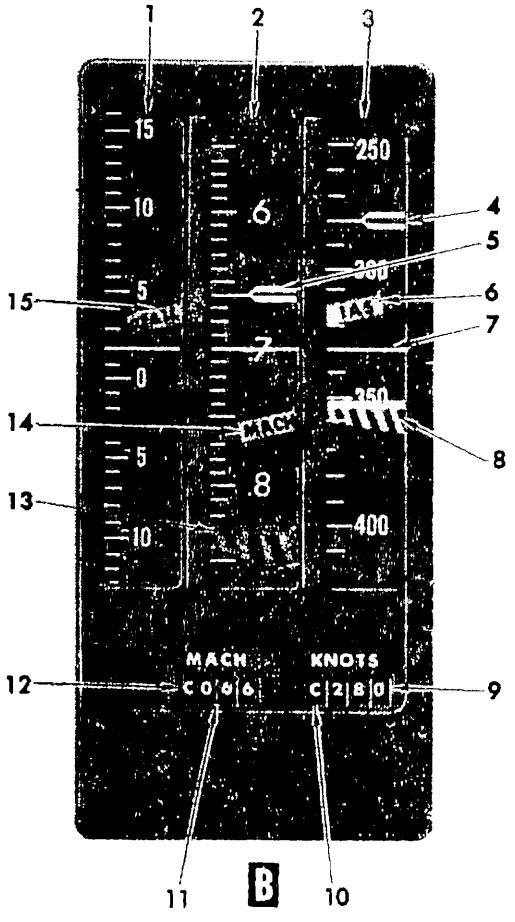

AIRSPEED-MACH INDICATOR (AMI)

1. ANGLE-OF-ATTACK-INDICATOR
2. MACH INDICATOR
3. AIRSPEED INDICATOR
4. COMMAND AIRSPEED MARKER
5. COMMAND MACH MARKER
6. AIRSPEED WARNING FLAG
7. FIXED INDEX LINE
8. MAXIMUM RECOMMENDED AIRSPEED MARKER
9. COMMAND AIRSPEED DIGITAL READOUT WINDOW
10. AIRSPEED ANNUNCIATOR (ACTUAL OR COMMAND)
11. COMMAND MACH DIGITAL READOUT WINDOW
12. MACH ANNUNCIATOR (ACTUAL OR COMMAND)
13. MAXIMUM RECOMMENDED MACH MARKER
14. MACH WARNING FLAG
15. ANGLE-OF-ATTACK WARNING FLAG

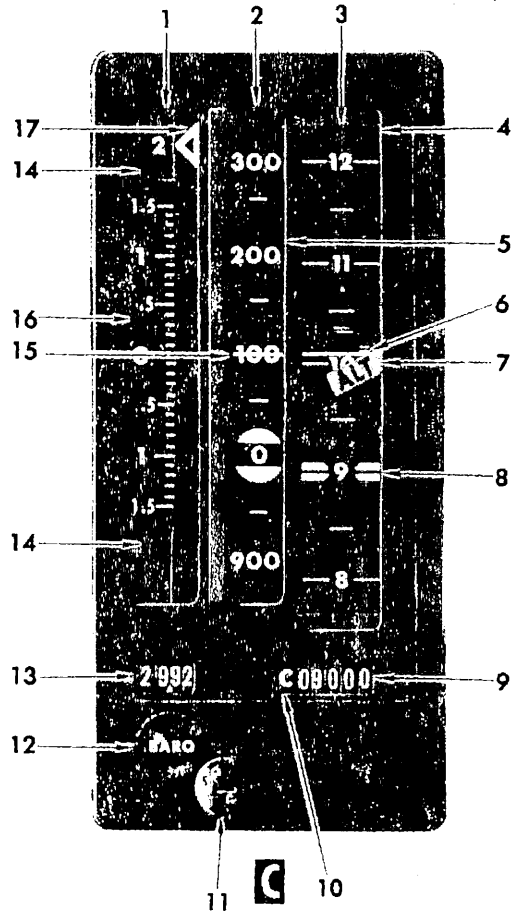

ALTITUDE-VERTICAL VELOCITY INDICATOR (AVVI)

1. VERTICAL VELOCITY INDICATOR
2. VERNIER ALTITUDE INDICATOR
3. GROSS COMMAND ALTITUDE INDICATOR
4. GROSS COMMAND ALTITUDE SCALE
5. VERNIER ALTITUDE SCALE
6. FIXED INDEX LINE
7. ALTITUDE WARNING FLAG
8. COMMAND ALTITUDE MARKER
9. COMMAND ALTITUDE DIGITAL READOUT WINDOW
10. ALTITUDE ANNUNCIATOR (ACTUAL OR COMMAND)
11. ALTITUDE ZERO ADJUSTMENT SCREW
12. BAROMETRIC PRESSURE SET KNOB
13. BAROMETRIC PRESSURE DIGITAL READOUT WINDOW
14. VERTICAL VELOCITY MOVING SCALE
15. FIXED INDEX LINE
16. VERTICAL VELOCITY FIXED SCALE
17. VERTICAL VELOCITY INDEX

C5A-1-9-052-1

Figure 1-110. (Sheet 1 of 3)

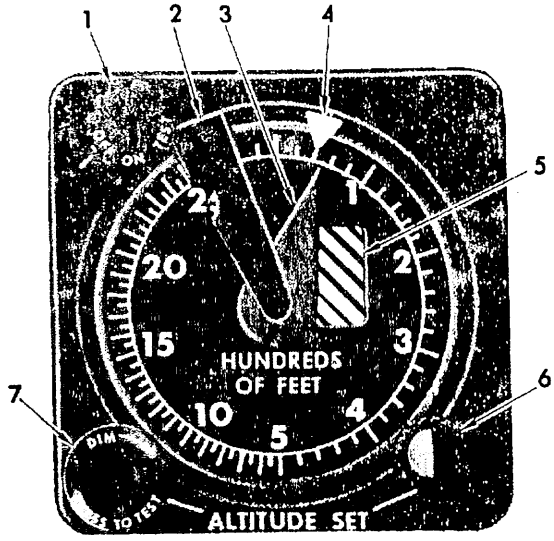

RADAR ALTIMETER

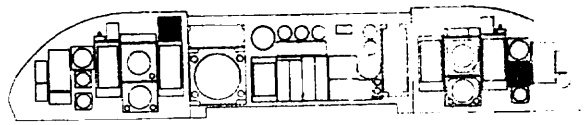

1. POWER AND FUNCTIONAL TEST SWITCH
2. ALTITUDE POINTER MASKING STRIP
3. ALTITUDE POINTER
4. ALTITUDE TRIP MARKER
5. WARNING FLAG
6. ALTITUDE TRIP SET KNOB
7. ALTITUDE LOW LIGHT

NOTE

1. ALTITUDE POINTER RETRACTS BEHIND MASKING STRIP DURING POWER OFF CONDITION, OR DURING OPERATION ABOVE 2500 FEET.
2. WARNING FLAG APPEARS FOR SYSTEM MALFUNCTION, DURING FUNCTIONAL TEST OR TRIP TEST.

Figure 1-109.

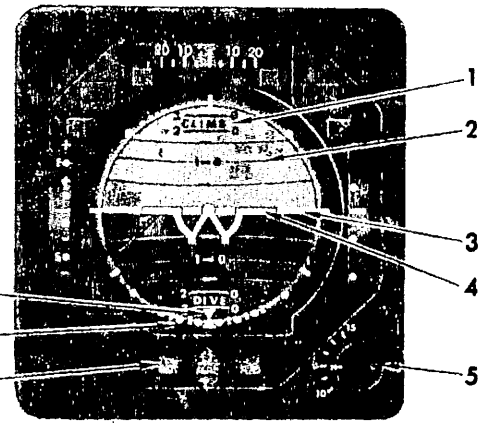

FLIGHT OR CRUISE MODE

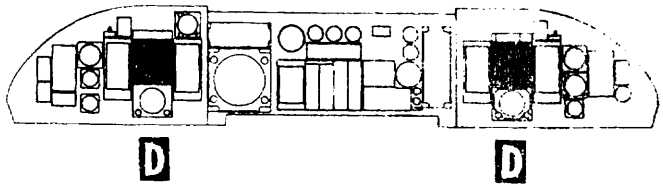

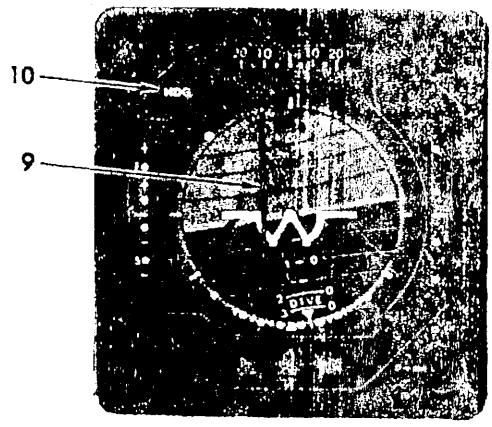

HEADING MODE

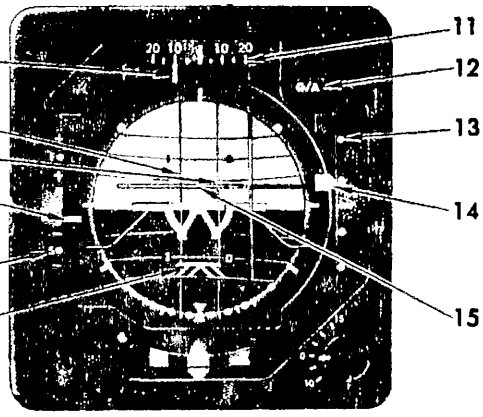

ILS OR APPROACH MODE

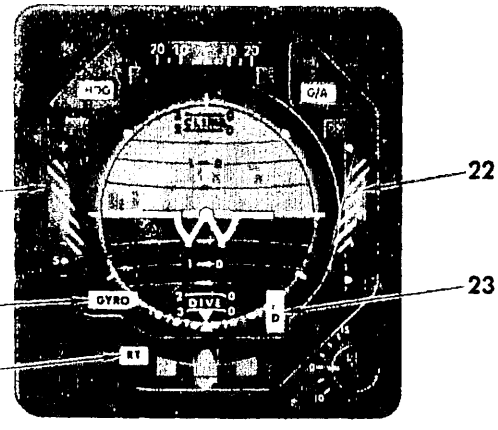

WARNING FLAG DISPLAYS

1. ATTITUDE SPHERE
2. PITCH REFERENCE SCALE
3. HORIZON BAR
4. MINIATURE AIRPLANE
5. PITCH TRIM KNOB
6. TURN AND SLIP INDICATOR
7. BANK SCALE
8. BANK POINTER
9. BANK STEERING BAR
10. HEADING MODE LIGHT
11. CRAB ANGLE SCALE
12. GO-AROUND MODE LIGHT
13. VERTICAL DEVIATION SCALE (GLIDESLOPE DEVIATION SCALE)
14. VERTICAL DEVIATION INDICATOR (GLIDESLOPE INDICATOR)
15. PITCH STEERING BAR
16. RUNWAY SYMBOL
17. SPEED DEVIATION SCALE
18. SPEED DEVIATION INDICATOR
19. ILS APPROACH BULLSEYE
20. APPROACH MODE JUMPERS
21. CRAB ANGLE INDICATOR
22. VERTICAL DEVIATION (GUIDESLOPE) WARNING FLAG)
23. FLIGHT DIRECTOR WARNING FLAG
24. RATE-OF-TURN WARNING FLAG
25. GYRO WARNING FLAG
26. SPEED DEVIATION WARNING FLAG

D

ATTITUDE DIRECTOR INDICATOR

C5A-1-X3/0-052-2

Figure 1-110. (Sheet 2 of 3)

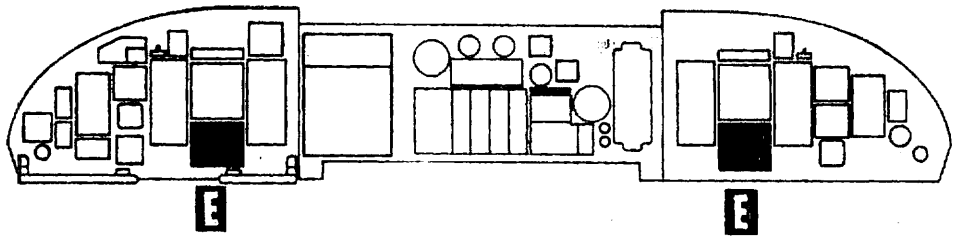

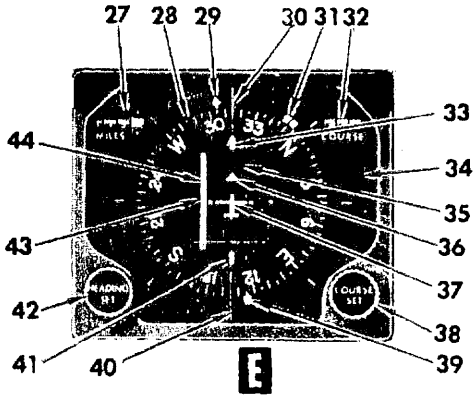

HORIZONTAL SITUATION INDICATOR

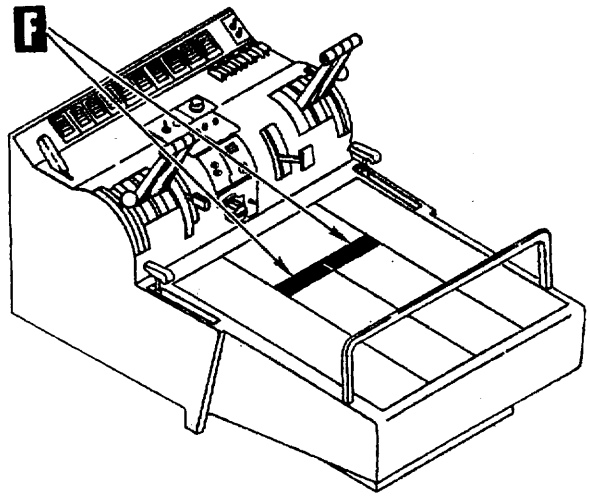

27. RANGE INDICATOR AND WARNING FLAG
28. COMPASS CARD
29. BEARING POINTER (HEAD)
30. UPPER LUBBER LINE (HEAD)
31. HEADING MARKER
32. COURSE SELECTOR WINDOW
33. COURSE ARROW (HEAD)
34. POWER OFF WARNING FLAG
35. COURSE WARNING FLAG
36. TO-FROM INDICATOR
37. AIRCRAFT SYMBOL
38. COURSE SET KNOB
39. BEARING POINTER (TAIL)
40. LOWER LUBBER LINE (TAIL)
41. COURSE ARROW (TAIL)
42. HEADING SET KNOB
43. COURSE DEVIATION SCALE
44. COURSE DEVIATION INDICATOR

F

REMOTE HSI HEADING AND COURSE SELECTOR PANEL
ON AIRPLANES 70170 AND UP AND
AIRPLANES MODIFIED BY T.O. 501.

C5A-1-X2/0-052-3

Figure 1-110. (Sheet 3 of 3)

NAVIGATION SELECTOR PANELS

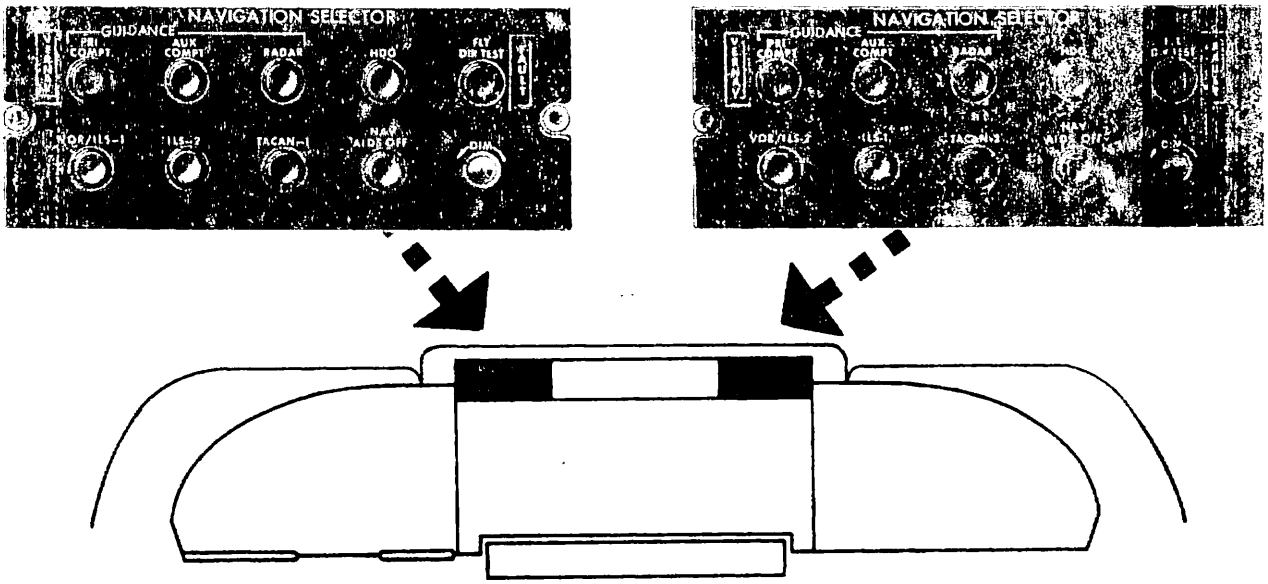

NOTE

⚠1 ON AIRPLANES MODIFIED BY T.O. 1376.

AUXILIARY NAV SELECT PANEL

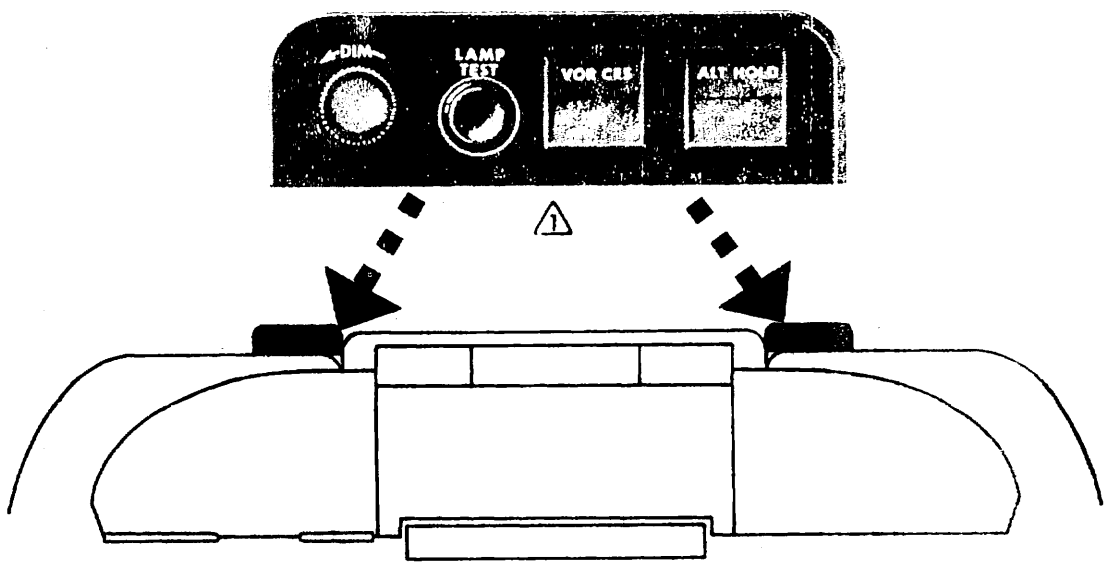

C5A-1-X /4-051

Figure 1-111.

(This page intentionally left blank.)

⚠8 FLIGHT DIRECTOR CHART

NAVIGATION SELECTOR PANEL SWITCH POSITIONS	ATTITUDE DIRECTOR INDICATOR						
	HDG ANNUNCIATOR LIGHT	G/A ANNUNCIATOR LIGHT	ILS APPROACH BULLSEYE	CRAB ANGLE POINTER	FD WARNING FLAG ⚠3	DH RING (ILS APPROACH BULLSEYE)	FLARE RING (ILS APPROACH BULLSEYE)
PRI COMPT	On manual heading mode: prior to capture Off-Dest/ Inertial HDG	Off-except in G/A	Out of view	Out of view	Active	——	——
AUX COMPT	On manual heading mode: prior to capture Off-Dest/ Inertial HDG	Off-except in G/A	Out of view	Out of view	Active	——	——
RADAR ⚠1	On man. hdg. mode during RAL pre-capture and for terrain following when man. hdg. is engaged	Off-except in G/A	In view for RAL after C.L. "Track" engage and valid	Functioning after RAL/CL "Track" engage and heading is valid	Active	Light on at breakaway point or DH	——
HDG ⚠2	On	Off-except in G/A	Out of view	Out of view	Active	——	——
VOR	Off-after VOR capture	Off-except in G/A	Out of view	Out of view	Active	——	——
ILS	Off-after ILS capture	Off-except in G/A	In view-after LOC "Track" engage	Functioning after LOC "Track" engage	Active	Light on at DH	Light on at flare engage
TACAN	Off-after capture	Off-except in G/A	Out of view	Out of view	Active	——	——
NAV AIDS OFF	Off (On if manual heading also selected)	Off-except in G/A	Out of view	Out of view	Active if HDG or GA selected	——	——
TEST	On	On	In view and centered	Functioning	In view	Light on	Light on

65A-1-X5/4-077-1

Figure 1-112. (Sheet 1 of 5)

ATTITUDE DIRECTOR INDICATOR (CONT)						
BANK STEERING BAR (4)	PITCH STEERING BAR (4)	VERTICAL DEVIATION INDICATOR	VERTICAL DEVIATION WARNING FLAG	SPEED COMMAND POINTER	SPEED COMMAND WARNING FLAG	RUNWAY SYMBOL
Computed Commands	Out of view, except for VERNAV commands (VERNAV mode)	Out of view, except for VERNAV mode and valid	——	In view for IAS or SKE commands	Active with IAS or SKE	In view at 200 feet and below
Computed Commands	Out of view	Out of view	Out of view	In view for IAS or SKE commands	Active with IAS or SKE	In view at 200 feet ond below
Computed Commands	In view with valid computed commands after RAL G/S capture	RAL: Deviation	Active in RAL	In view for IAS or SKE commands	Active with IAS or SKE	In view at 200 feet and below
Computed Commands	Out of view	Out of view	Out of view	In view for IAS or SKE commands	Active with IAS or SKE	In view at 200 feet and below
Computed Commands	Out of view	Out af view	Out of view	In view for IAS or SKE commands	Active with IAS or SKE	In view at 200 feet and below
Computed Commands	In view with valid computed commands after G/S capture	G/S deviation	Active	In view for IAS or SKE commands	Active with IAS or SKE	In view at 200 feet and below
Computed Commands	Out of view	Out of view	Out of view	In view for IAS or SKE commands	Active with IAS or SKE	In view at 200 feet and below
Out of view except G/A or manual heading selected	Out of view except if G/A also selected	Out of view	Out of view	Out of view	Out of view	In view at 200 feet and below
Biased half scale right	Biased half scale up	Centered	In view	Centered	In view	Not tested

C5A-1-X2/0-077-2

Figure 1-112. (Sheet 2 of 5)

NAVIGATION SELECTOR PANEL SWITCH POSITIONS	PCI	HORIZONTAL SITUATION INDICATOR		
	DIAMOND PATTERN	COURSE DEVIATION INDICATOR	COURSE WARNING FLAG	TO-FROM INDICATOR
PRI COMPT	Computed commands following VERNAV capture when C.L. mode also selected. Obscured if pitch and roll channels not valid	Cross track deviation when C.L. mode is selected	Active when C.L. mode selected	Out of view
AUX COMPT	Out of view	Cross track deviation when C.L. mode is selected	Active when C.L. mode selected	Out of view
RADAR (1)	Computed commands after RAL capture and for terrain following when pitch and roll channels are valid	Cross track when RAL is selected or when C.L. mode is selected with TF mode	Active when RAL is selected when C.L. is selected with TF mode	Out of view
HDG (2)	Out of view unless TF or G/A modes also selected and both pitch and roll channels valid	Centered	Out of view	Out of view
VOR	Out of view	Course deviation	Active	Active
ILS	Computed commands after glideslope capture when both pitch and roll channels valid	LOC course deviation	Active	Out of view
TACAN	Out of view	Course deviation	Active	Active
NAV AIDS OFF	Out of view	Centered	Out of view	Out of View
TEST	In view and commanding a pitch up and a roll to the right at a steady rate.	Centered	In view	—

C5A-1-X2/3-077-3

Figure 1-112. (Sheet 3 of 5)

HORIZONTAL SITUATION INDICATOR (CONT)				
BEARING POINTER	HEADING MARKER	COURSE ARROW & WINDOW	RANGE INDICATOR	RANGE WARNING FLAG
Bearing to destination	Computed desired heading	Computed desired course	Distance to destination	Active
Bearing to destination	Computed desired heading	Computed desired course	Masked	In view
Bearing to destination	Computed desired heading	Computed desired course	Dependent upon computer NAV mode	Dependent upon computer NAV mode
Active with concurrent NAV mode	Manually set	Manually set and no output unless concurrent NAV mode selected	Masked unless PRI CMPTR or TACAN also selected	Active with PRI CMPTR and TACAN
Bearing to station	Manually set	Manually set	Masked	In view
Inactive	Manually set	Desired course (manual set)	Masked	In view
Bearing to station	Manually set	Desired course (manual set)	Distance to station	Active
Stationary at top lubberline	Manually set	Slaved to heading	Masked	In view
—	—	—	—	—

C5A-1-X3/4-077-4

Figure 1-112. (Sheet 4 of 5)

NOTE

1. WHILE IN THE RADAR MODE, IF A TERRAIN FOLLOWING MODE SIGNAL AND A RAL SIGNAL ARE PRESENT AT THE SAME TIME, A TF MODE WILL BE ENGAGED.
2. THE HEADING MODE CAN OVERRIDE ANY MODE EXCEPT THE GO-AROUND MODE.
3. WHEN ACTIVE, IT MONITORS FLIGHT DIRECTOR COMPUTER VALIDITY.
4. REMOVED FROM VIEW WHEN NAV AID SIGNAL IS INVALID.
5. RAL = RADAR APPROACH TO LAND.
6. G/A = GO-AROUND.
7. WHEN RADAR IS SELECTED ON THE NAVIGATOR'S SELECTOR PANEL, THE PRIMARY AND AUXILIARY GUIDANCE COMPUTERS ARE INTERNALLY SELECTED IN THE RESPECTIVE FLIGHT DIRECTOR COMPUTER:
   FDC NO. 1 - PRIMARY COMPUTER
   FDC NO. 2 - AUXILIARY COMPUTER

8. THIS CHART IS TO BE USED FOR AIRPLANES NOT MODIFIED BY T.O. 1326, 1343, 1346, 1347, 1349 AND 1376.

C5A-1-X3/4-077-5

Figure 1-112. (Sheet 5 of 5)

(This page intentionally left blank.)

⑨ FLIGHT DIRECTOR CHART

NAVIGATION SELECTOR PANEL SWITCH POSITIONS	ATTITUDE DIRECTOR INDICATOR						
	HDG ANNUNCIATOR LIGHT	G/A ANNUNCIATOR LIGHT	ILS APPROACH BULLSEYE	CRAB ANGLE POINTER	FD WARNING FLAG ③	DH RING (ILS APPROACH BULLSEYE)	FLARE RING (ILS APPROACH BULLSEYE)
PRI COMPT	On in manual hdg. On in courseline pre-capture. Off in courseline, capture & Inert. hdg/Dest. Steer.	Off-except in G/A	Out of view	Out of view	Active	——	——
AUX COMPT	On in manual hdg. On in courseline pre-capture. Off in courseline capture & Inert. hdg/Dest. Steer.	Off-except in G/A	Out of view	Out of view	Active	——	——
RADAR ①	On in manual hdg. On in courseline pre-capture. Off in courseline capture & Inert. hdg/Dest. Steer.	Off-except in G/A	In view after ARA Radar Glideslope Capture	Functioning after ARA/CL "Track" engage and heading is valid	Active	Light on at breakaway point or DH	——
HDG ②	On	Off-except in G/A	Out of view	Out of view	Active	——	——
VOR (or) VOR CRS	Off-after VOR capture .on for station passage	Off-except in G/A	Out of view	Out of view	Active	——	——
ILS	Off-after ILS capture	Off-except in G/A	⑤	Functioning after LOC "Track" engage	Active	Light on at DH	Light on at flare engage
TACAN	Off-after capture On for station passage	Off-except in G/A	Out of view	Out of view	Active	——	——
NAV AIDS OFF	Off (On if manual heading also selected)	Off-except in G/A	Out of view	Out of view	Active if HDG or GA selected	——	——
TEST	On	On	In view and centered	Functioning	In view	Light on	Light on
ALT HOLD	On if Manual Heading is selected	Off except in G/A	Out of view	Out of view	Active	——	——

C5A-1-X4/1-204-1

Figure 1-113. (Sheet 1 of 5)

ATTITUDE DIRECTOR INDICATOR (CONT)						
BANK STEERING BAR (4)	PITCH STEERING BAR (4)	VERTICAL DEVIATION INDICATOR	VERTICAL DEVIATION WARNING FLAG	SPEED COMMAND POINTER	SPEED COMMAND WARNING FLAG	RUNWAY SYMBOL
Active	Out of view, except for VERNAV, ALT HOLD or G/A	Out of view, except for VERNAV mode and valid	Out of view	In view for IAS or SKE commands	Active in SKE. Out of view in IAS	In view at 200 feet and below
Active	Out of view, except for ALT HOLD or G/A	Out of view	Out of view	In view for IAS or SKE commands	Active in SKE. Out of view in IAS	In view at 200 feet and below
Active	In view after ARA G/S capture, ALT HOLD, TF or G/A	ARA Deviation and TF commands	Active in ARA and TF	In view for IAS or SKE commands	Active in SKE. Out of view in IAS	In view of 200 feet and below
Active	Out of view, except for ALT HOLD or G/A	Out of view	Out of view	In view for IAS or SKE commands	Active in SKE. Out of view in IAS	In view at 200 feet and below
Active	Out of view, except for ALT HOLD or G/A	Out of view	Out of view	In view for IAS or SKE commands	Active in SKE. Out of view in IAS	In view at 200 feet and below
Active	In view after G/S capture, ALT HOLD or G/A	G/S deviation	Active	In view for IAS or SKE commands	Active in SKE. Out of view in IAS	In view of 200 feet and below
Active	Out of view, except for ALT HOLD or G/A	Out of view	Out of view	In view for IAS or SKE commands	Active in SKE. Out of view in IAS	In view at 200 feet and below
Out of view except G/A or manual heading selected	Out of view except if G/A also selected	Out of view	Out of view	Out of view	Out of view	In view at 200 feet and below
Biased half scale right	Biased half scale up	Centered	In view	Centered	In view	Not tested
Active	Active	Out of view	Out of view	In view for IAS or SKE commands	Active in SKE. Out of view in IAS	In view at 200 feet and below

C5A-1-X4/1-204-2

Figure 1-113. (Sheet 2 of 5)

NAVIGATION SELECTOR PANEL SWITCH POSITIONS	PCI	ANSP		HORIZ SITUATION IND		
	DIAMOND PATTERN	ALT HOLD ON LIGHT	VOR CRS ON LIGHT	COURSE DEVIATION INDICATOR	COURSE WARNING FLAG	TO-FROM INDICATOR
PRI COMPT	Active if VERNAV capture or ALT HOLD or G/A and if the roll and pitch channels are valid.	Off except in ALT HOLD	Off	Cross track deviation when C.L. mode is selected	Active when C.L. mode selected	Out of view
AUX COMPT	Active if in ALT HOLD or G/A and if the roll and pitch channels are valid.	Off except in ALT HOLD	Off	Cross track deviation when C.L. mode is selected	Active when C.L. mode selected	Out of view
RADAR (1)	Active after AR capture and for TF or ALT HOLD or G/A and if the pitch and roll channels are valid.	Off except in ALT HOLD	Off	Cross track when ARA is selected or when C.L. mode is selected with TF mode	Active when ARA is selected when C.L. is selected with TF mode	Out of view
HDG (2)	Out of view unless TF or G/A modes also selected and both pitch and roll channels valid	Off except in ALT HOLD	Off	Centered	Out of view	Out of view
VOR OR VOR CRS	Active if ALT HOLD or G/A and if the roll and pitch channels are valid.	Off except in ALT HOLD.	On in VOR CRS	Course deviation	Active	Active
ILS	Active after glideslope capture, or ALT HOLD, or G/A and if the pitch and roll channels are valid.	Off except in ALT HOLD	Off	LOC course deviation	Active	Out of view
TACAN	Active if in ALT HOLD or G/A and if the roll and pitch channels are valid.	Off except in ALT HOLD	Off	Course deviation	Active	Active
NAV AIDS OFF	Active if in ALT HOLD or G/A and if the roll and pitch channels are valid.	Off except in ALT HOLD	Off	Centered	Out of view	Out of view
TEST	In view and commanding a pitch up and a roll to the right at a steady rate.	Off	Off	Centered	In view	——
ALT HOLD	Active if the roll and pitch channels are valid.	On	Off except in VOR CRS	——	——	——

C5A-1-x4/1-204-3

Figure 1-113. (Sheet 3 of 5)

HORIZONTAL SITUATION INDICATOR (CONT)				
BEARING POINTER	**HEADING MARKER**	**COURSE ARROW & WINDOW**	**RANGE INDICATOR**	**RANGE WARNING FLAG**
Bearing to destination (Destination steer and courseline). Airplane heading in inertial heading.	Computed desired heading (Inertial heading and destination steer). Manually set in courseline.	Computed desired course (courseline). Airplane heading in Inertial heading/ destination steer.	Distance to destination (Destination steer and courseline)	Active (Destination steer and courseline)
Bearing to destination (Destination steer and courseline). Airplane heading in inertial heading.	Computed desired heading (Inertial heading and destination steer). Manually set in courseline.	Computed desired course (courseline). Airplane heading in Inertial heading/ destination steer.	Masked	In view
Bearing to destination (courseline)	Manually set (courseline)	Computed desired course (courseline)	Dependent upon computer NAV mode (pilot's courseline)	Dependent upon computer NAV mode (pilot's courseline)
Active with concurrent NAV mode	Manually set	Manually set (no output unless concurrent NAV mode selected)	Masked unless PRI CMPTR or TACAN also selected	Active with PRI CMPTR and TACAN
Bearing to station	Manually set	Manually set	Masked	In view
Inactive	Manually set	Desired course (manual set)	Masked	In view
Bearing to station	Manually set	Desired course (manual set)	Distance to station	Active
Stationary at top lubberline	Manually set	Slaved to heading	Masked	In view
—	—	—	—	—
—	—	—	—	—

C5A-1-X4/1-204-4

Figure 1-113. (Sheet 4 of 5)

NOTE

1. WHILE IN THE RADAR MODE, IF A TERRAIN FOLLOWING MODE SIGNAL AND AN ARA SIGNAL ARE PRESENT AT THE SAME TIME, A TF MODE WILL BE ENGAGED.

2. THE HEADING MODE CAN OVERRIDE ANY MODE EXCEPT THE GO-AROUND MODE.

3. WHEN ACTIVE, IT MONITORS FLIGHT DIRECTOR COMPUTER VALIDITY.

4. REMOVED FROM VIEW WHEN NAV AID SIGNAL IS INVALID.

5. ILS BULLSEYE REQUIRES THE FOLLOWING:
   - A. VOR/ILS-1 SELECTED ON PILOT'S NAV SELECT PANEL.
   - B. VOR/ILS-2 SELECTED ON COPILOT'S NAV SELECT PANEL.
   - C. BOTH VHF NAV RECEIVERS TUNED AND LOCALIZER AND GLIDESLOPE SIGNALS IN AGREEMENT.
   - D. BOTH RADAR ALTIMETERS ON AND OUTPUTS IN AGREEMENT.
   - E. LOC CAPTURED.
   - F. G/S CAPTURED.
   - G. NO LOCALIZER OR GLIDESLOPE WARNING FLAGS.
   - H. PITCH AUTOPILOT COMPUTER OPERATING AND DESENSITIZED GLIDESLOPE OR FLARE VALID (MASTER POWER ON AFCS CONTROL PANEL NEED NOT BE ON).

6. ARA = AIRBORNE RADAR APPROACH.

7. G/A = GO-AROUND.

8. WHEN RADAR IS SELECTED ON THE NAVIGATOR'S SELECTOR PANEL, THE PRIMARY AND AUXILIARY GUIDANCE COMPUTERS ARE INTERNALLY SELECTED IN THE RESPECTIVE FLIGHT DIRECTOR COMPUTER:
   FDC NO. 1 - PRIMARY COMPUTER
   FDC NO. 2 - AUXILIARY COMPUTER

9. THIS CHART IS TO BE USED FOR AIRPLANES MODIFIED BY T.O. 1326, 1343, 1346, 1347, 1349, AND 1376.

C5A-1-34/1-204-5

Figure 1-113. (Sheet 5 of 5)

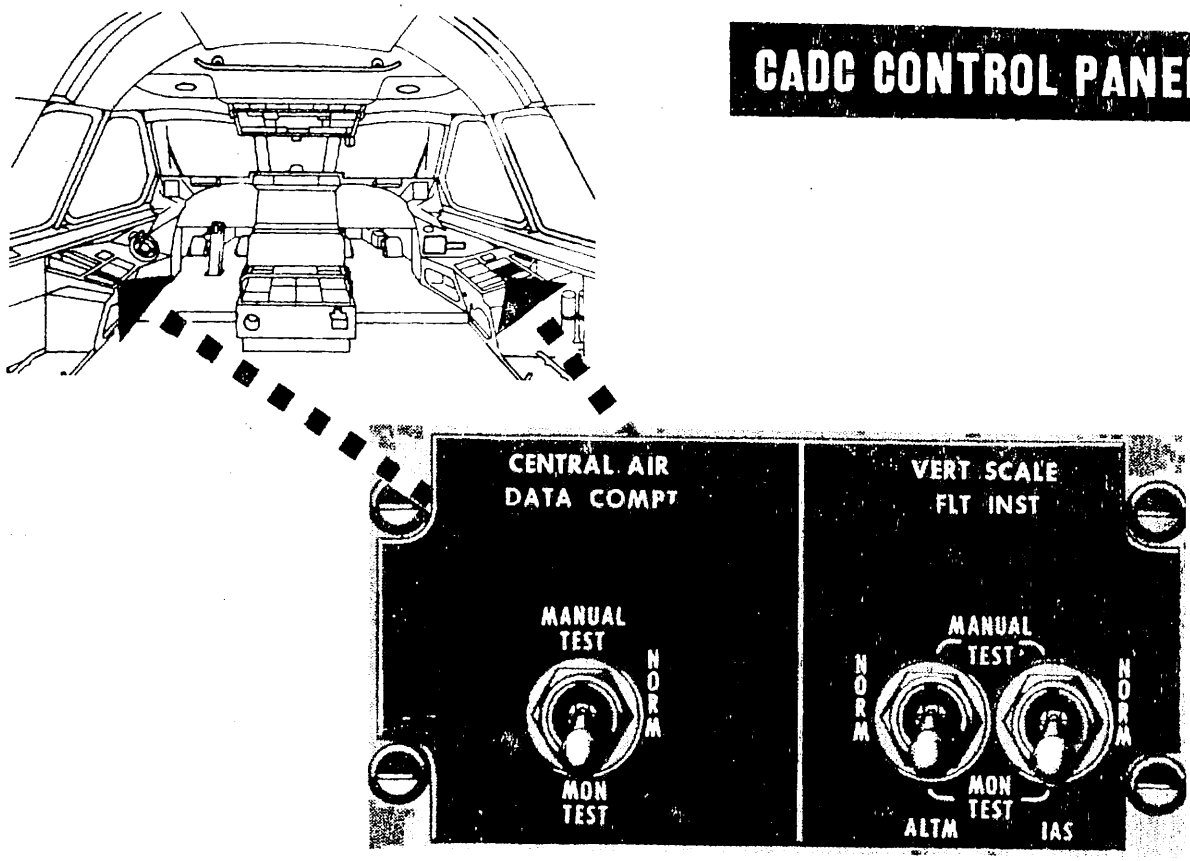
CADC CONTROL PANELS
CENTRAL AIR DATA COMPT
MANUAL TEST
NORM
MON TEST
VERT SCALE FLT INST
MANUAL TEST
NORM
NORM
MON TEST
ALTM
IAS
C5A-1-9-101

Figure 1-114.

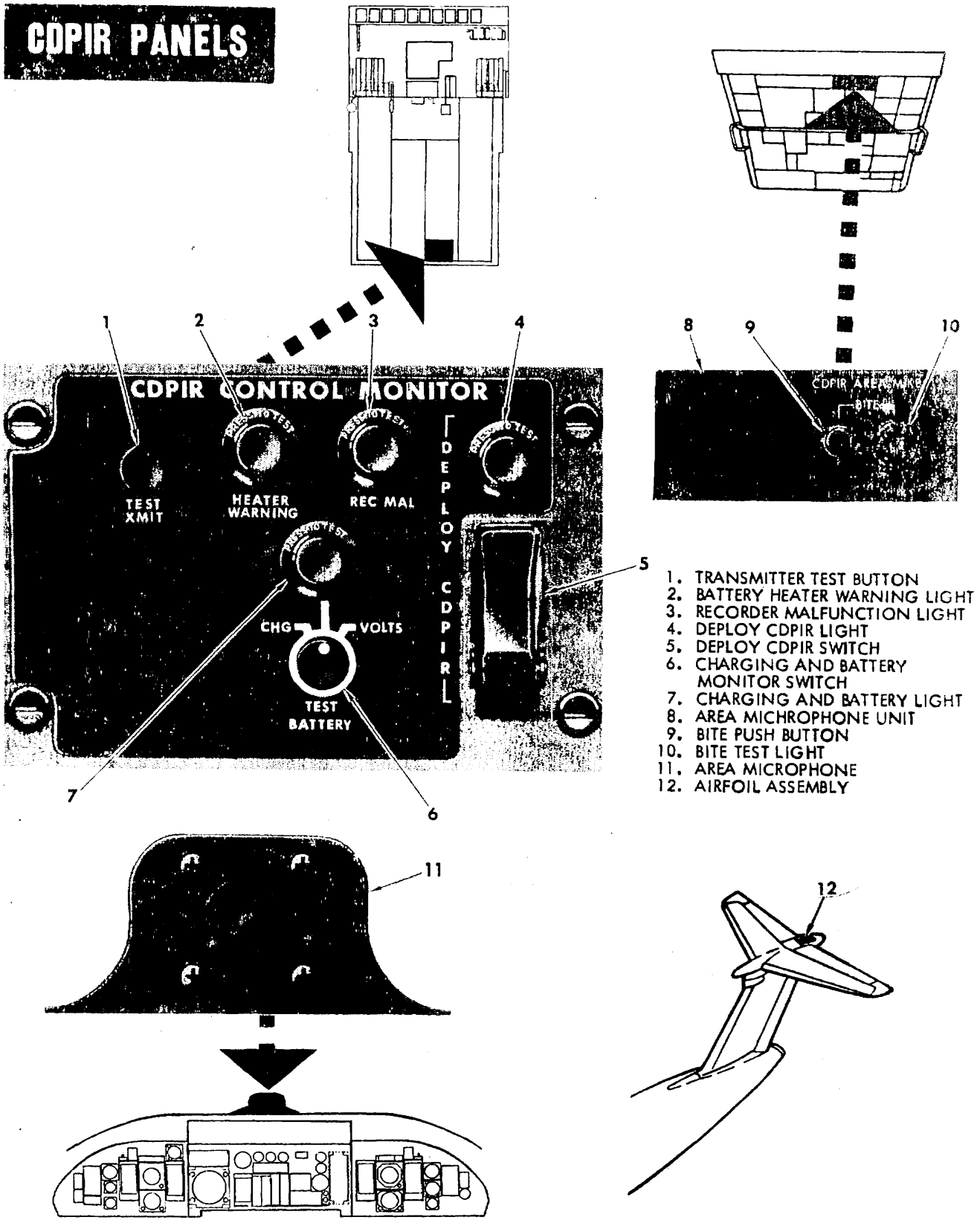
CDPIR PANELS
CDPIR CONTROL MONITOR
TEST XMIT
HEATER WARNING
REC MAL
DEPLOY CDPIR
CHG
VOLTS
TEST BATTERY
1
2
3
4
5
6
7
8
9
10
11
12
CDPIR AREA MIKE
BITE
1. TRANSMITTER TEST BUTTON
2. BATTERY HEATER WARNING LIGHT
3. RECORDER MALFUNCTION LIGHT
4. DEPLOY CDPIR LIGHT
5. DEPLOY CDPIR SWITCH
6. CHARGING AND BATTERY MONITOR SWITCH
7. CHARGING AND BATTERY LIGHT
8. AREA MICHROPHONE UNIT
9. BITE PUSH BUTTON
10. BITE TEST LIGHT
11. AREA MICROPHONE
12. AIRFOIL ASSEMBLY
C5A-1-XI/O-037

Figure 1-115.

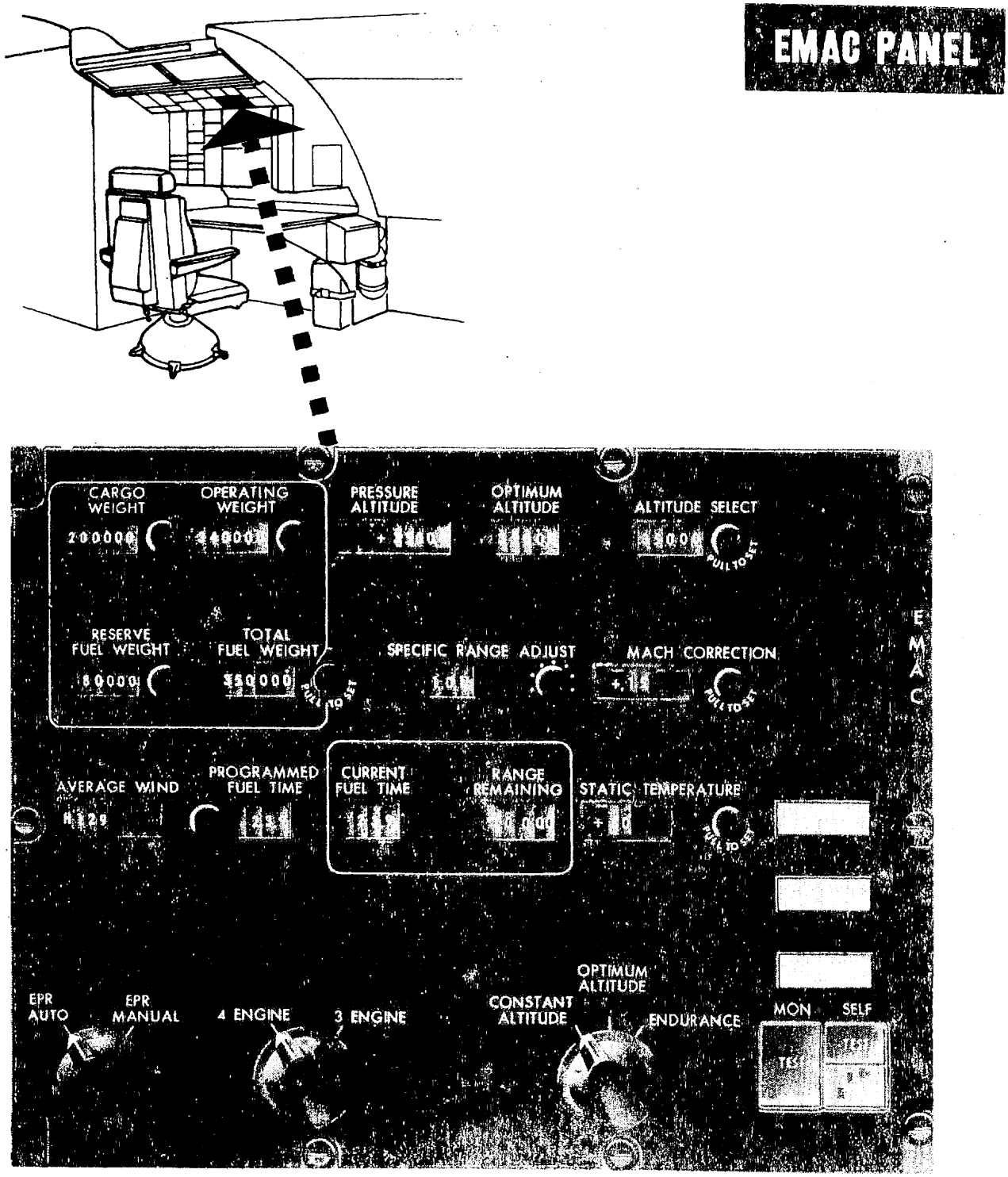

C5A-1-9-057

Figure 1-116.

MADAR SYSTEM DIAGRAM

NOTE

1. ON 80211 THRU 00467 MODIFIED BY T.O. 1365, 1377 AND 1378.

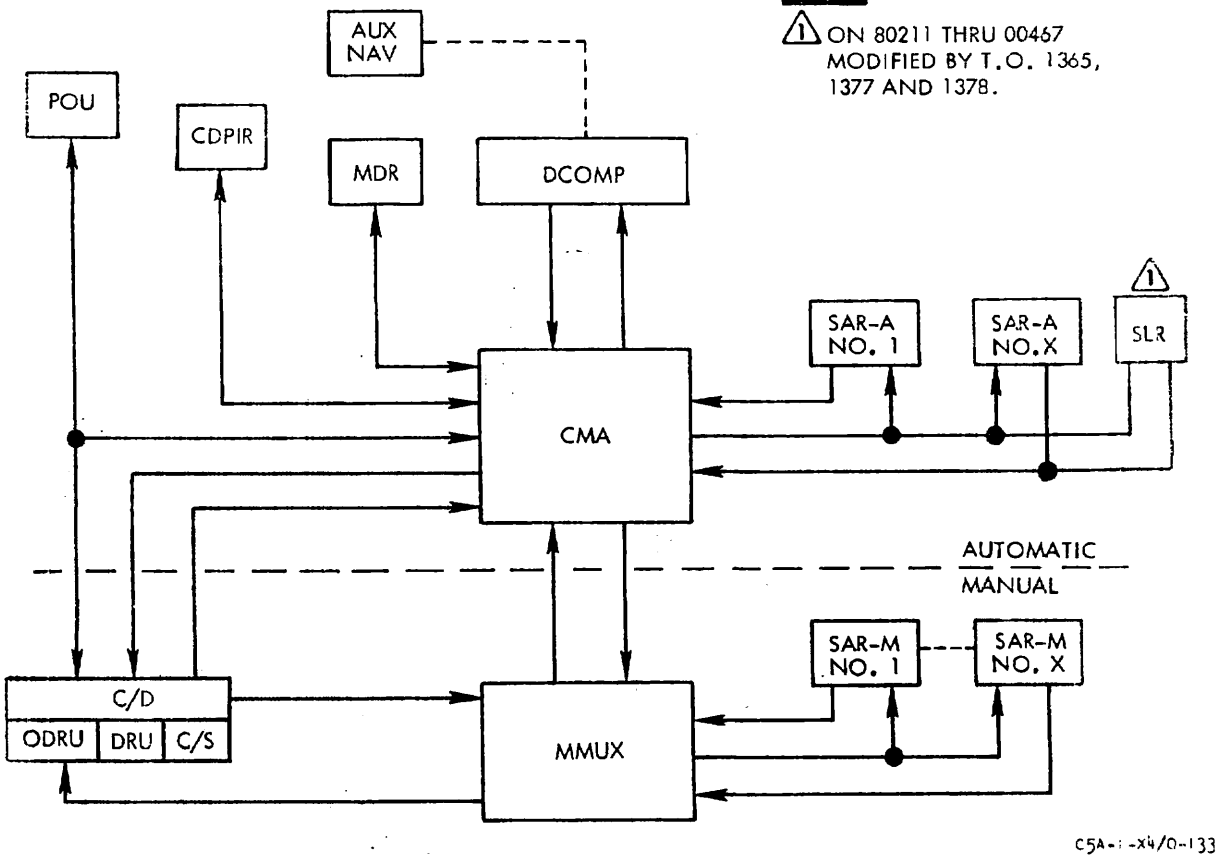

Figure 1-117.

CSU COMMAND CODES

COMMAND ACTION	COMMAND
Go To Standby	1000001
Go To Test	1000002
Go To Operate	1000003
Zero Flight Report	1000011
Print Flight Report	1000021
Print Initialization Data (MDR Header)	1000022
Print Suppressed LRU's	1000023
* A. F. Manual Data Entry XXXXX	31XXXXX
Update Airframe Tail No.	11XXXXX
Update Airframe Hours	12XXXXX
Update Engine (N) Serial No.	13NXXXX
Update Engine (N) Time	14NXXXX
Update Engine (N) Signature Serial No.	16NXXXX
Update DRU Film Pack Serial Number	18XXXXX
Perform Engine (N) Health Calculations	200000N
Perform Engine (N) Health Calculations	201000N
Update Day/Month/Year	5DDMM7Y
Update Hour/Minute/Second	6HHMM00
Acknowledge All LRU Failures	7100000
Acknowledge LRU XXXXX Failure	79XXXXX
Print Calibrated Voltages From SAR XX	17000XX
Automatic Test Point SAR XX/CH YY	810XXYY
Report LRU XXXXX Replacement	92XXXXX
Report Status of LRU XXXXX	93XXXXX
Suppress Reports of LRU XXXXX	94XXXXX
Unsuppress Reports of LRU XXXXX	95XXXXX
Report LRU XXXXX Failure	99XXXXX
Presently Failed LRU's	LRU Status
Restart Calculations	DCOMP Prog. Reset

* In accordance with MAC prescribed operational directive.

C5A-1-X3/3-503

Figure 1-118.

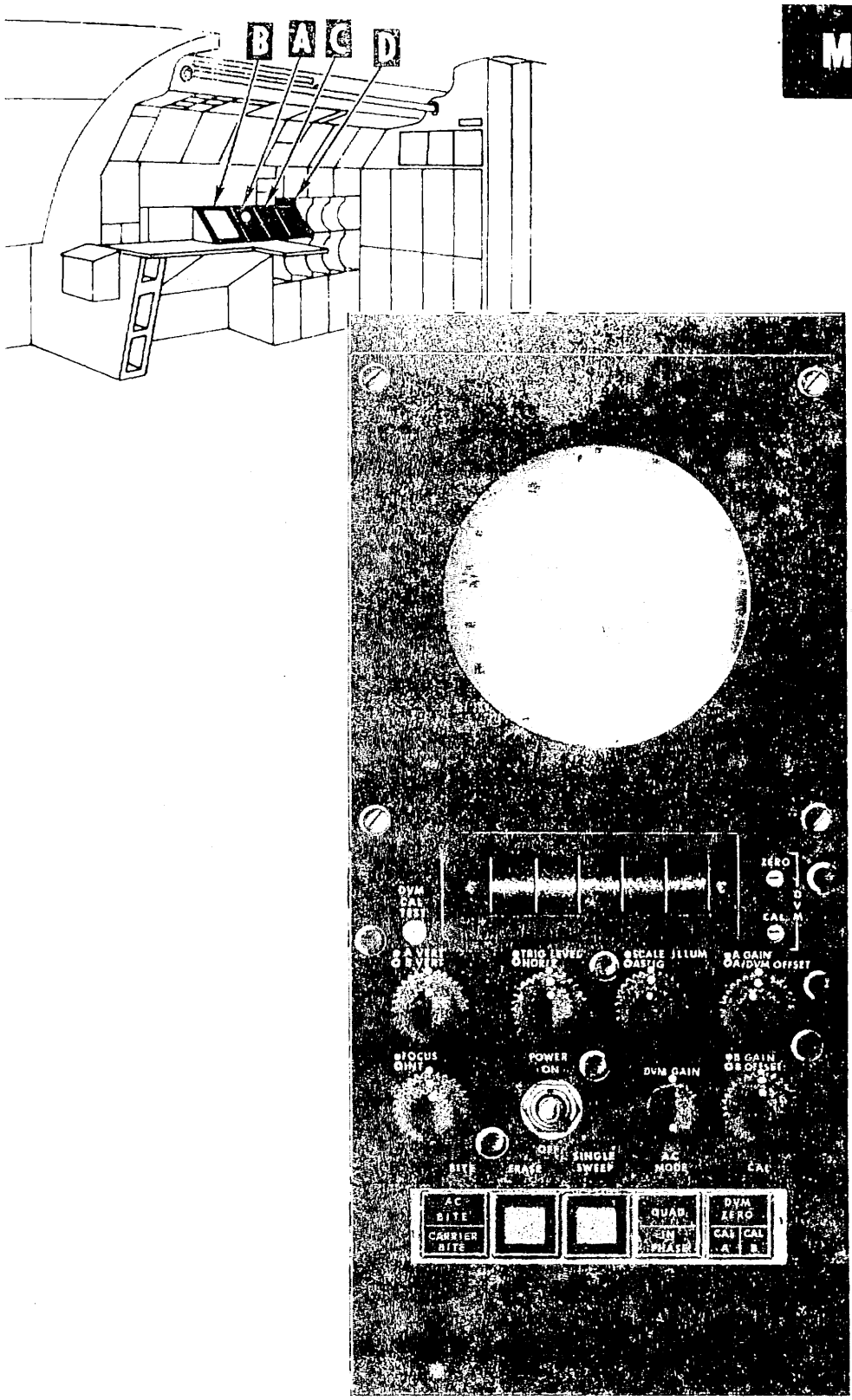

A

OSCILLOSCOPE AND DIGITAL READOUT UNIT

C5A-1-X2/0-054-1

Figure 1-119. (Sheet 1 of 4)

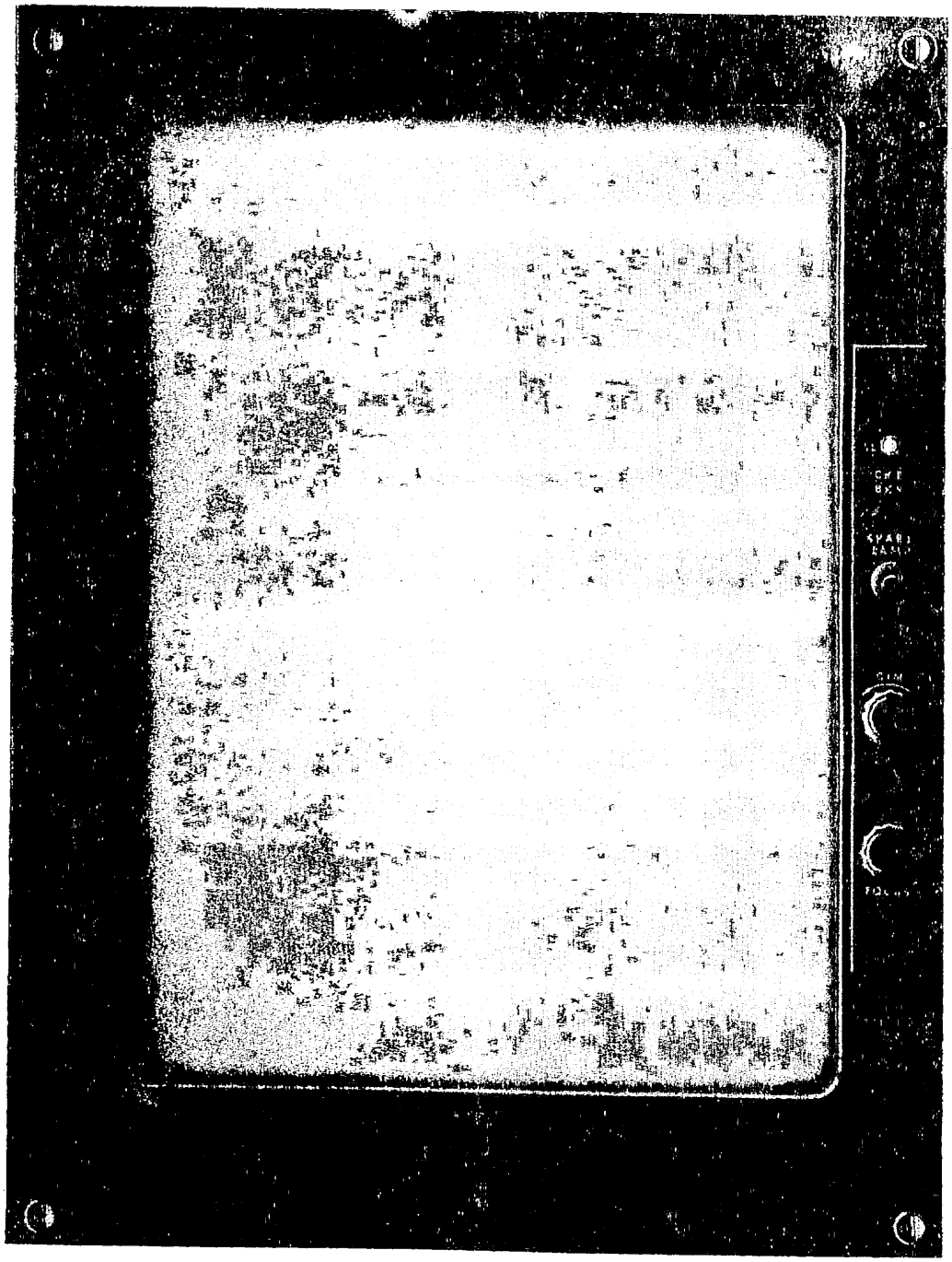

B

DATA RETRIEVAL UNIT

C5A-1-4-054-2

Figure 1-119. (Sheet 2 of 4)

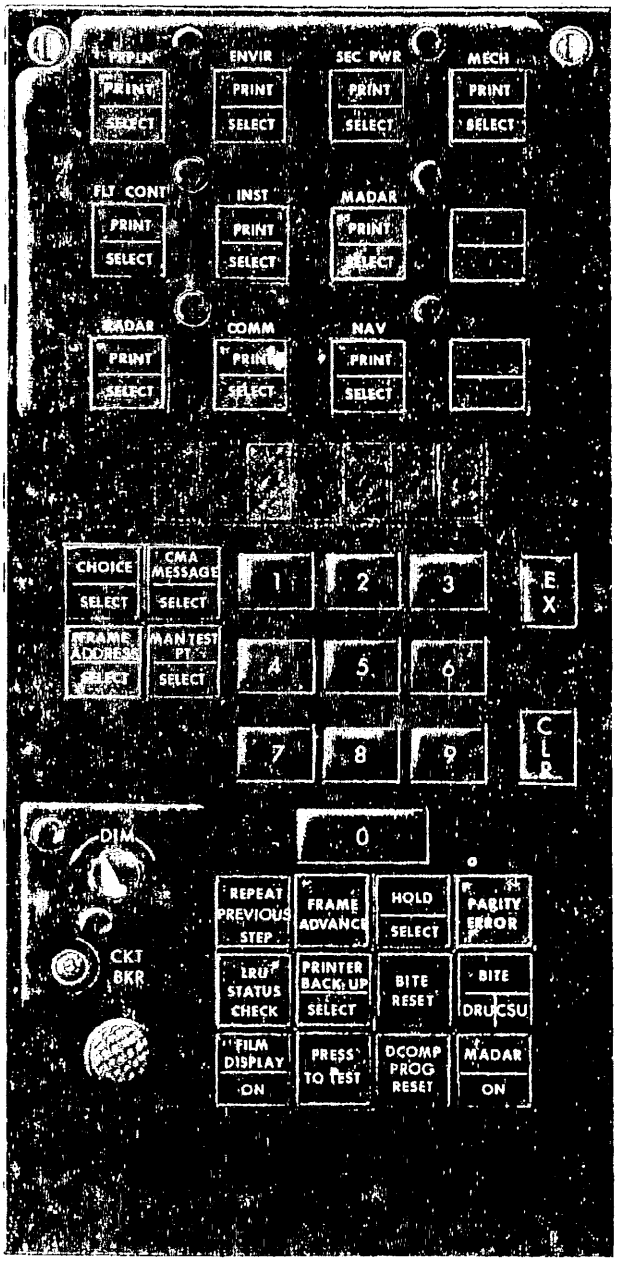

C

CONTROL AND SEQUENCER UNIT

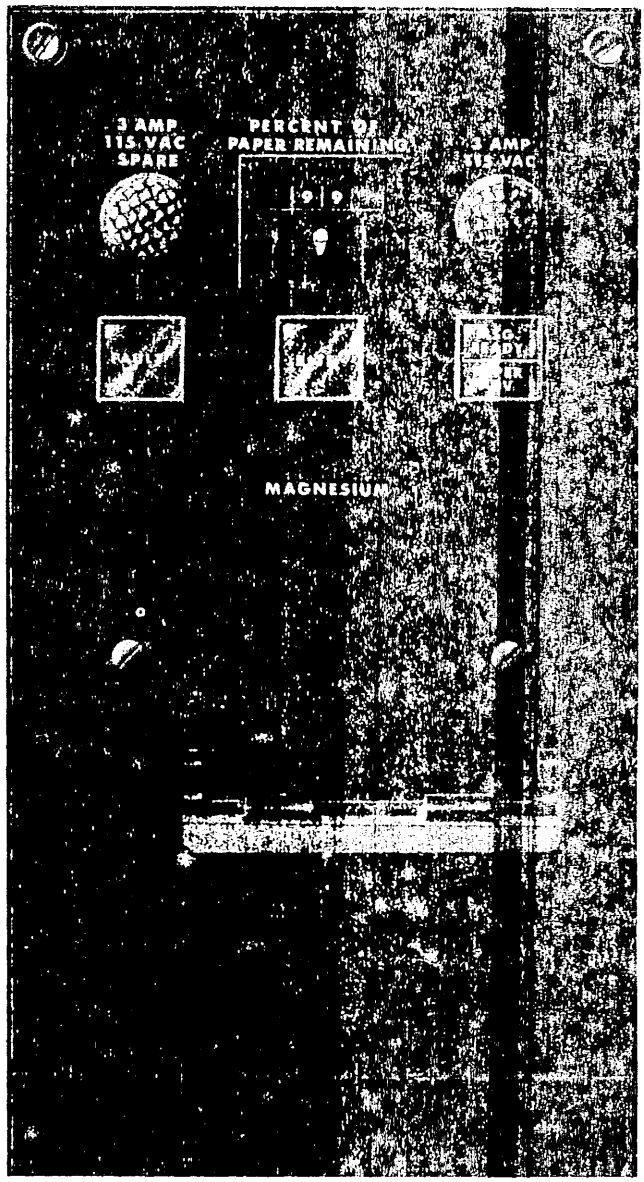

D

PRINTOUT UNIT

C5A-1-6-054-3

Figure 1-119. (Sheet 3 of 4)

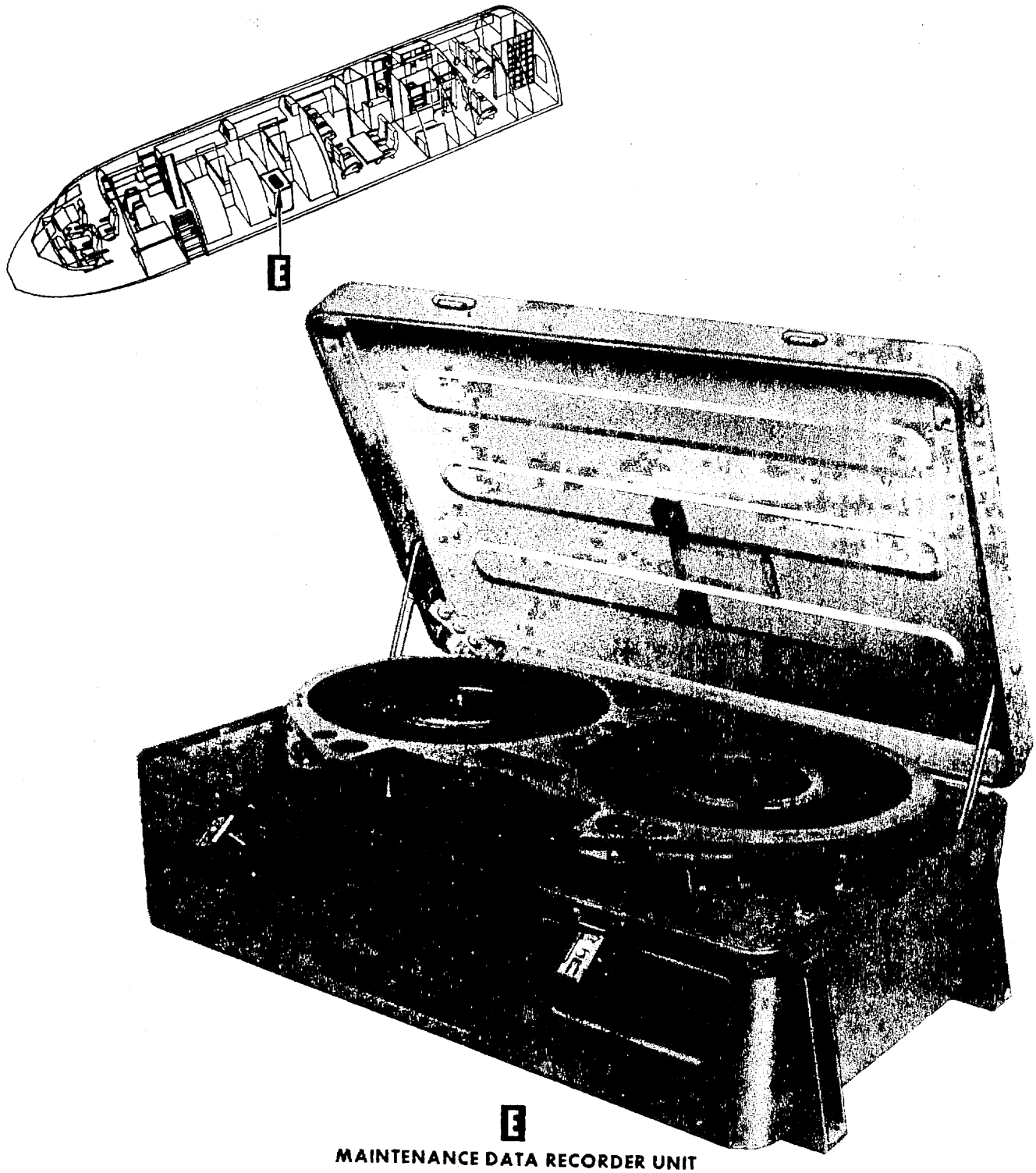

C5A-1-4-054-4

Figure 1-119. (Sheet 4 of 4)

WHOLE ENGINE VIBRATION TRACES

(FRAME 4995)

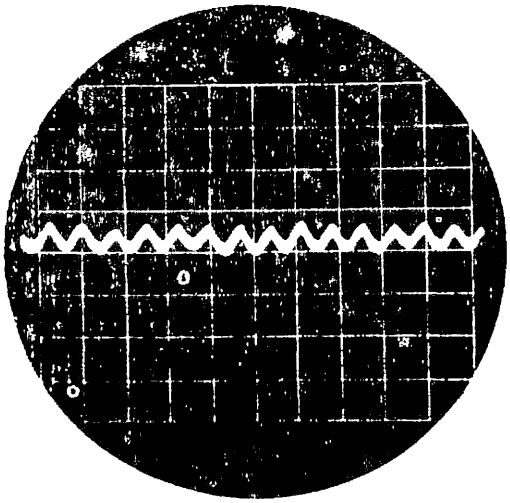

VIEW 1

CORE DOMINANT COMBINED FAN AND CORE TRACE, NORMAL IF LESS THAN 2.5 SCOPE DIVISIONS.

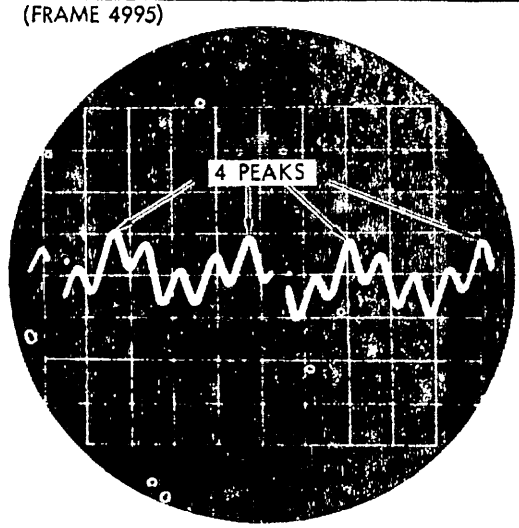

VIEW 2

SOMEWHAT FAN DOMINANT (3 - 5 PEAKS) COMBINED FAN AND CORE TRACE. NORMAL IF LESS THAN 2.5 SCOPE DIVISIONS. FAN DOMINATION BARELY DISCERNABLE.

NOTE

AN INCREASE IN AMPLITUDE CAN OCCUR WITH THE SAME NUMBER OF PEAKS. IF THIS CORE TRACE PEAKS OFF THE SCOPE, THERE SHOULD BE AS MANY NEARLY VERTICAL LINES AS THERE ARE PEAKS AND VALLEYS.

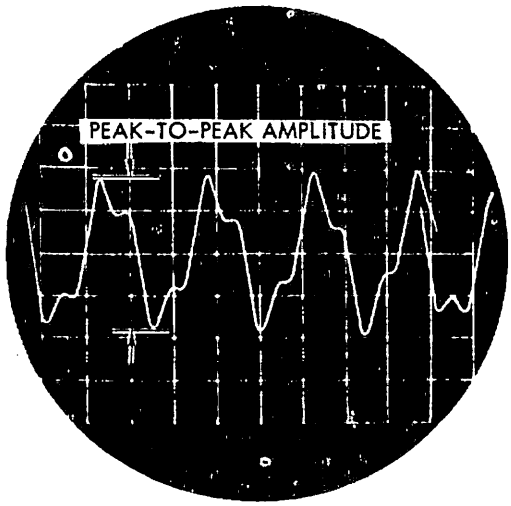

VIEW 3

FAN DOMINANT (3 - 5 PEAKS) COMBINED FAN AND CORE TRACE. ABNORMAL WHEN ABOVE 2.5 SCOPE DIVISIONS. IF THIS FAN TRACE PEAKS OFF SCOPE, THERE SHOULD BE AS MANY NEARLY VERTICAL LINES AS THERE ARE PEAKS AND VALLEYS (6 - 10 LINES).

C5A-1-X4/71-207

Figure 1-119A.

RESONANT CHECK TRACES

(FRAME 4994)

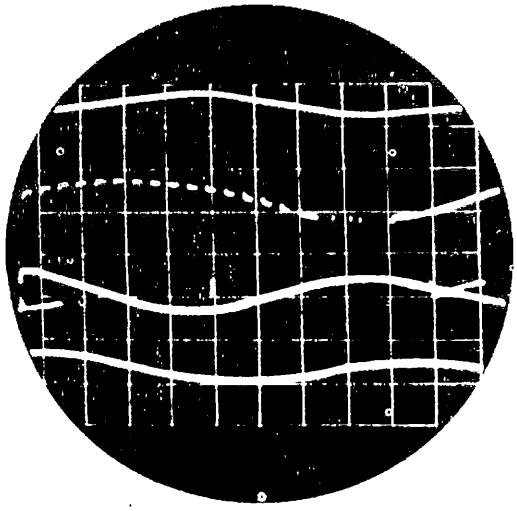

VIEW 1

NORMAL CORE TRACES FOR FOUR ENGINES ON SCOPE AT ONE TIME.

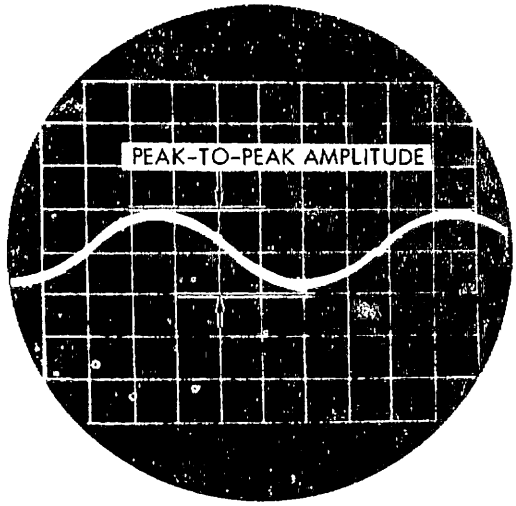

VIEW 2

ABNORMAL CORE TRACE FOR ONE ENGINE. TWO OR MORE SCOPE DIVISIONS. IF THIS TRACE PEAKS OFF THE SCOPE THERE WILL BE 3 TO 4 NEARLY VERTICAL STRAIGHT LINES.

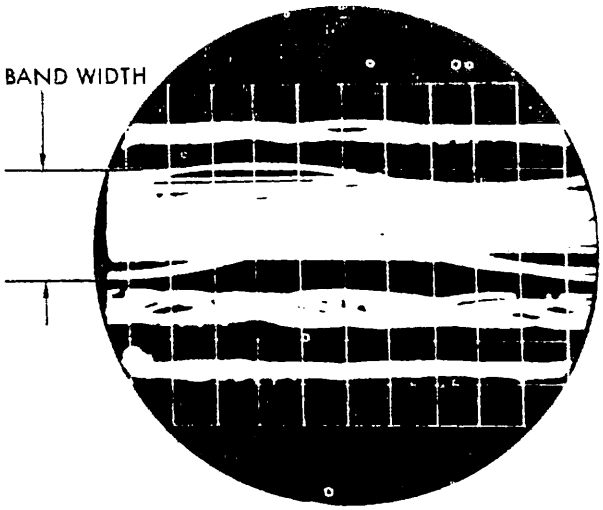

VIEW 3

DEVELOPED WHOLE ENGINE BAND TRACES FOR 4 ENGINES. BANDS 1, 3 AND 4 ARE NORMAL TRACES. BAND 2 IS ABNORMAL, FAN DOMINANT.

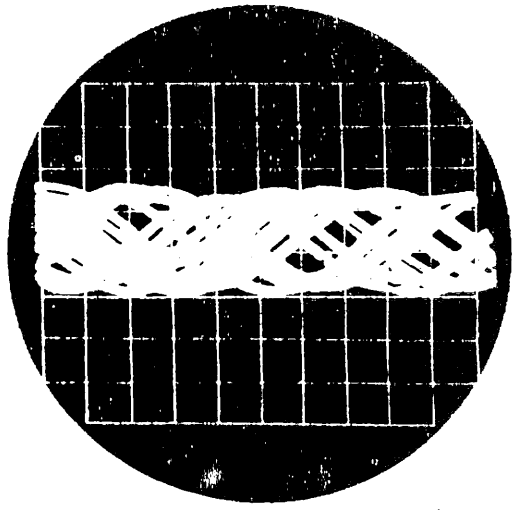

VIEW 4

DEVELOPED WHOLE ENGINE BAND TRACE, ABNORMAL, CORE DOMINANT.

NOTE

IT WILL BE IMPOSSIBLE TO DEVELOP A USEFUL WHOLE ENGINE BAND IF EITHER CORE OR FAN TRACE IS PEAKING OFF SCOPE.

C5A-1-X4/0-208

Figure 1-119B.

MADAR SYSTEM MALFUNCTION TRACES

(FRAME 4994)

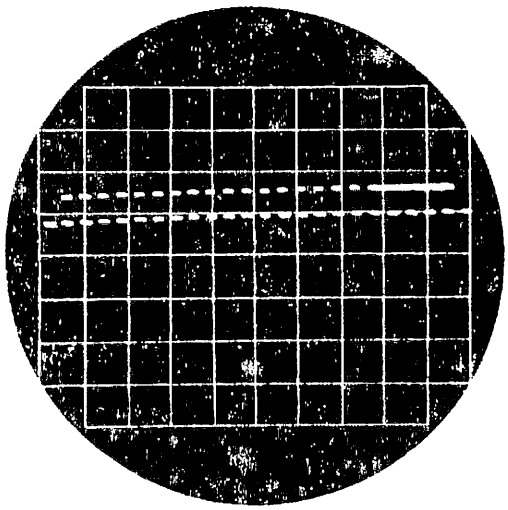

VIEW 1

OPEN CIRCUIT
(ENGINE RUNNING)

THE DASHED TRACE IS CAUSED BY CDPIR INTERRUPT.

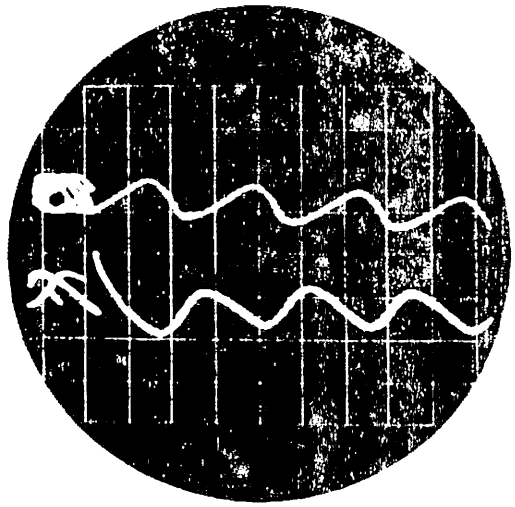

VIEW 2

LIGHT SHORT

NOTE

THE ABOVE VIEWS CONTAIN TRACES FOR TWO ENGINES SEPARATED BY A-VERT.

VIEW 3

HEAVY SHORT

THIS VIEW IS THE SAME FREQUENCY AS VIEW 2. THE INPUT AMPLITUDE IS SO GREAT THAT THE TRACE PEAKS OFF THE SCOPE. THERE ARE AS MANY NEARLY VERTICAL LINES AS THERE ARE PEAKS AND VALLEYS.

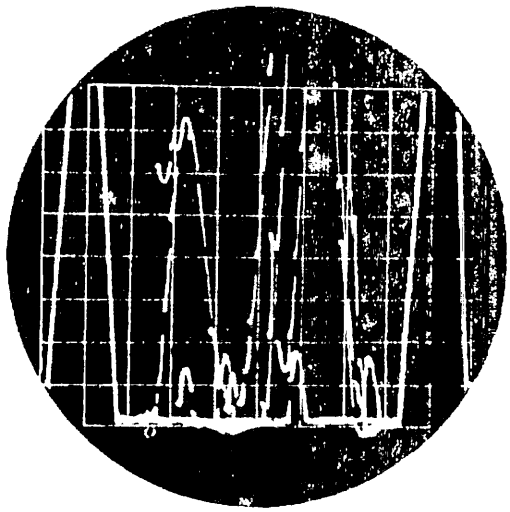

VIEW 4

INTERMITTENT SIGNAL LEAD

SOLID LINES INDICATE SHORT CIRCUIT AND BROKEN LINES INDICATE OPEN CONDUCTOR.

C5A-1-XX/X-209-1

Figure 1-119C. (Sheet 1 of 2)

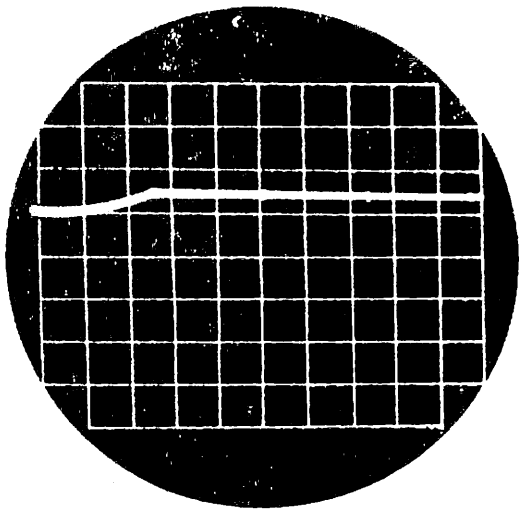

VIEW 5

INTERMITTENT OPEN

STRAIGHT LINE INDICATES LOSS OF SIGNAL.

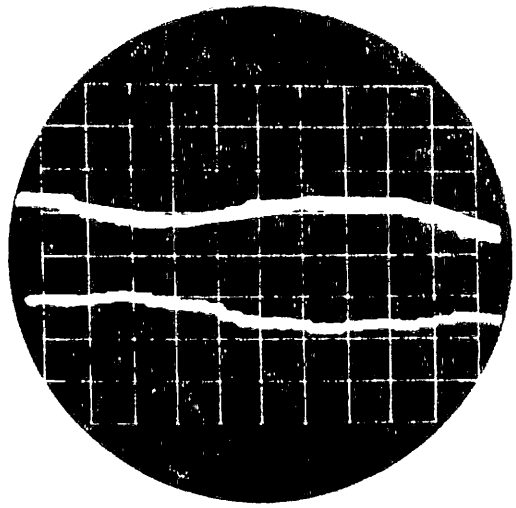

VIEW 6

SLOW DCOMP

THE SLOWER THE DCOMP THE MORE PRONOUNCED THE STAIR STEPS WILL BECOME.

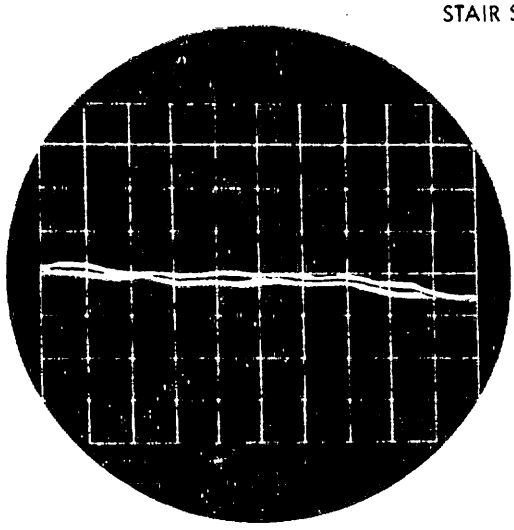

VIEW 7

HYDRAULIC PUMP MASKING CORE TRACE

DEPRESS PUMP(S) TO VIEW CLEAR CORE TRACE, IF DESIRED. IF THE TRACES WERE AT OR OVER LIMIT, THE CORE WOULD DOMINATE THIS PARTICULAR HYDRAULIC PUMP INPUT.

C5A-1-X4/0-209-2

Figure 1-119C. (Sheet 2 of 2)

WEIGHT AND BALANCE COMPUTER PANEL

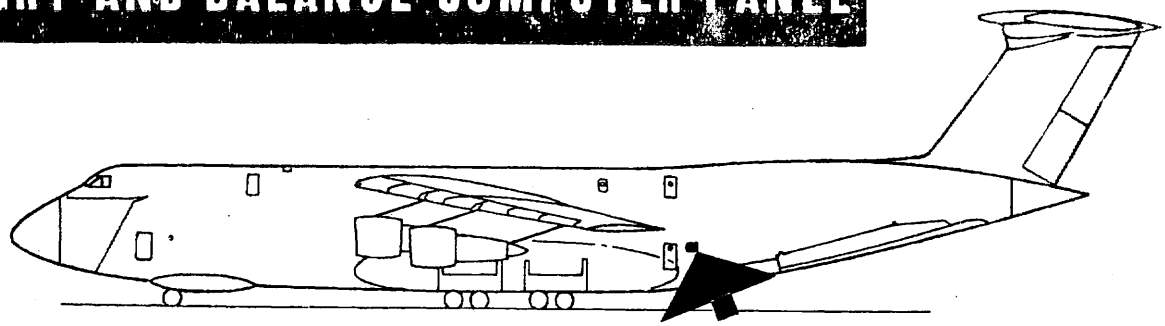

NOTE

1. ON 00454, 00458 AND UP AND AIRPLANES MODIFIED BY T.O. 1554, THE POSITIONS OF THE KNEELING MODE SELECTOR SWITCH ARE "UKN/AFT", "LVL" AND "FWD". THE POSITIONS OF THE SENSOR SELECTOR SWITCH FOR THE NOSE GEAR ARE "UKN", "LVL" AND "FWD".

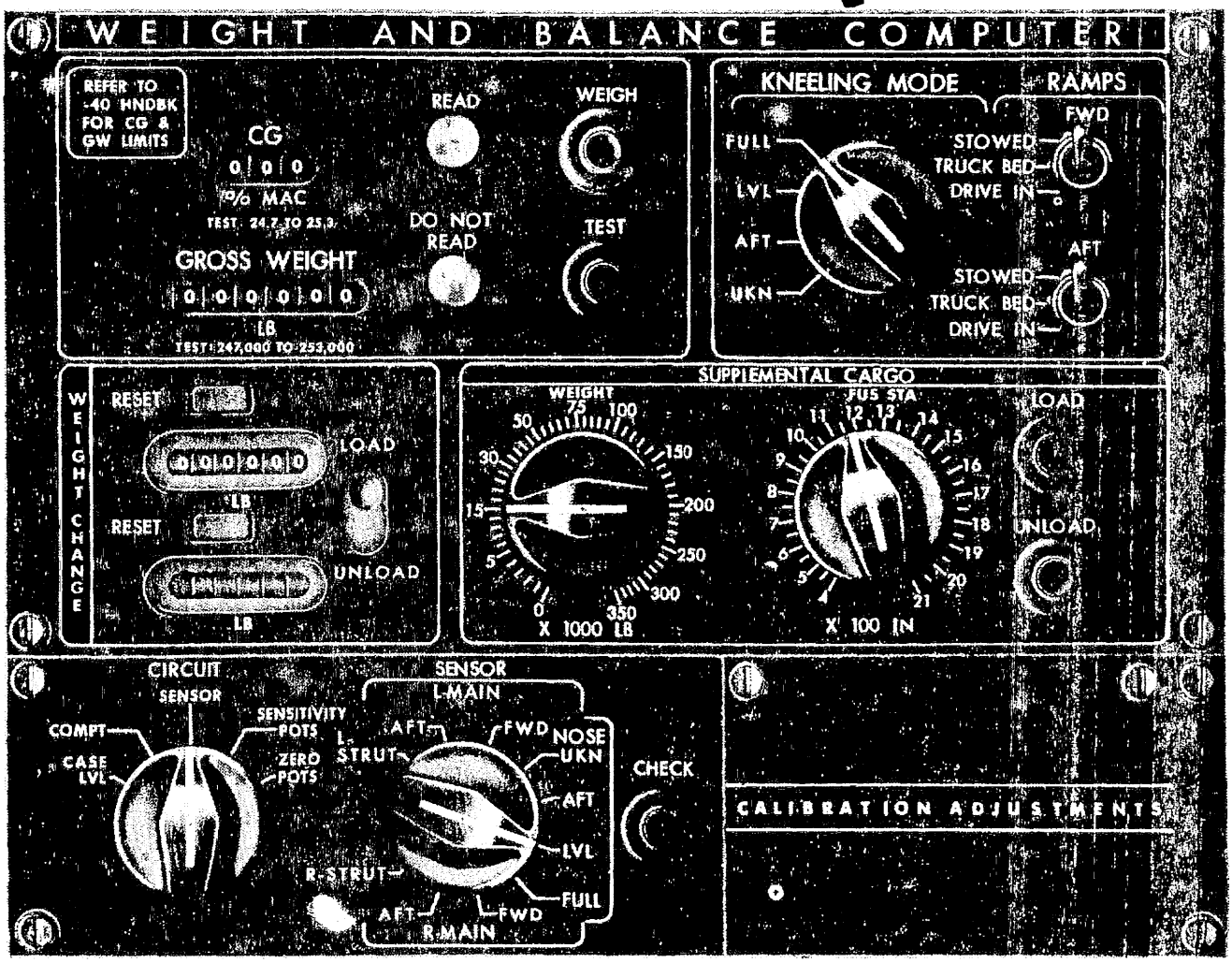

C5A-1-X'4/0-080

Figure 1-120.

PARADROP AND ADS PANELS

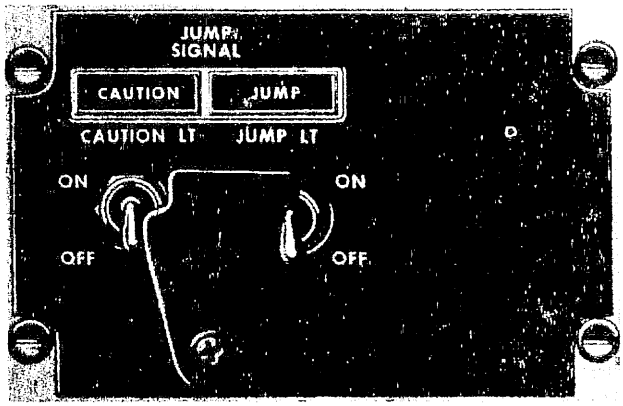

PARADROP JUMP SIGNAL PANEL

A

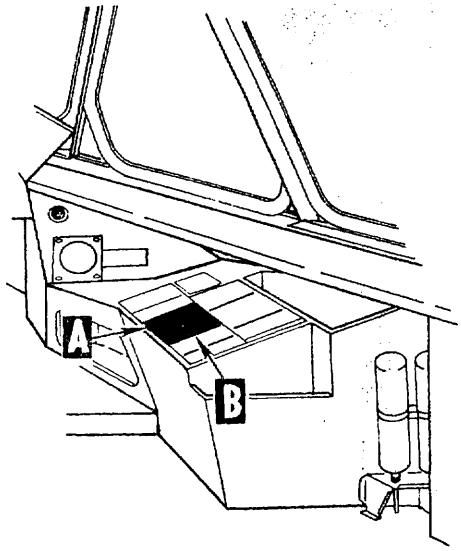

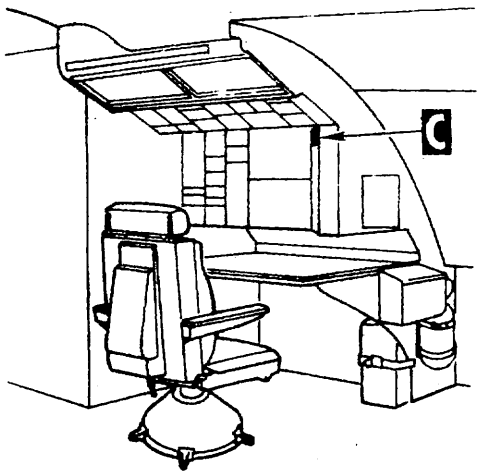

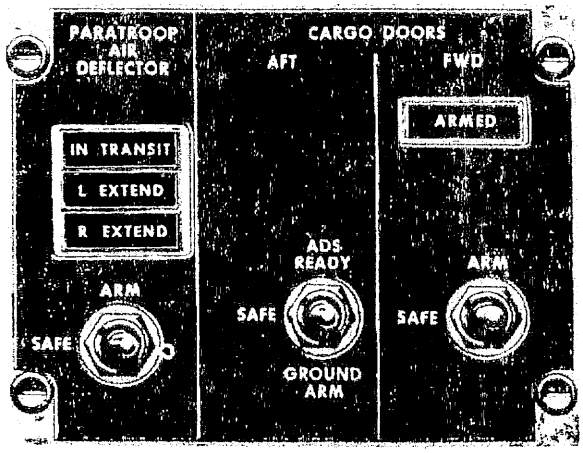

PARADROP AIR DEFLECTOR, CARGO DOORS AND ADS PANEL

B

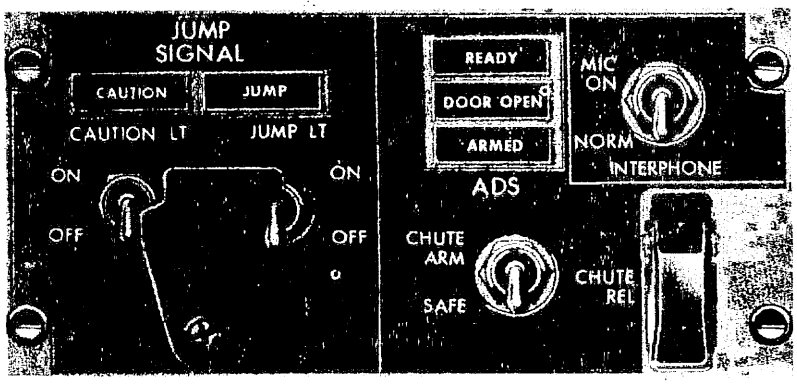

NAVIGATOR'S ADS CONTROL PANEL

C

C5A-1-0-071-1

Figure 1-121. (Sheet 1 of 2)

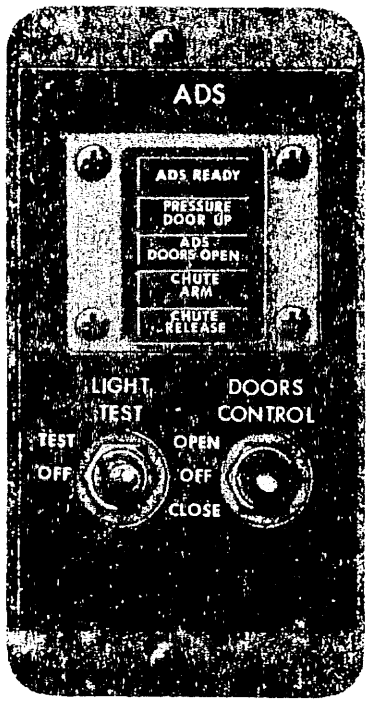

D

LOADMASTER'S FWD ADS PANEL

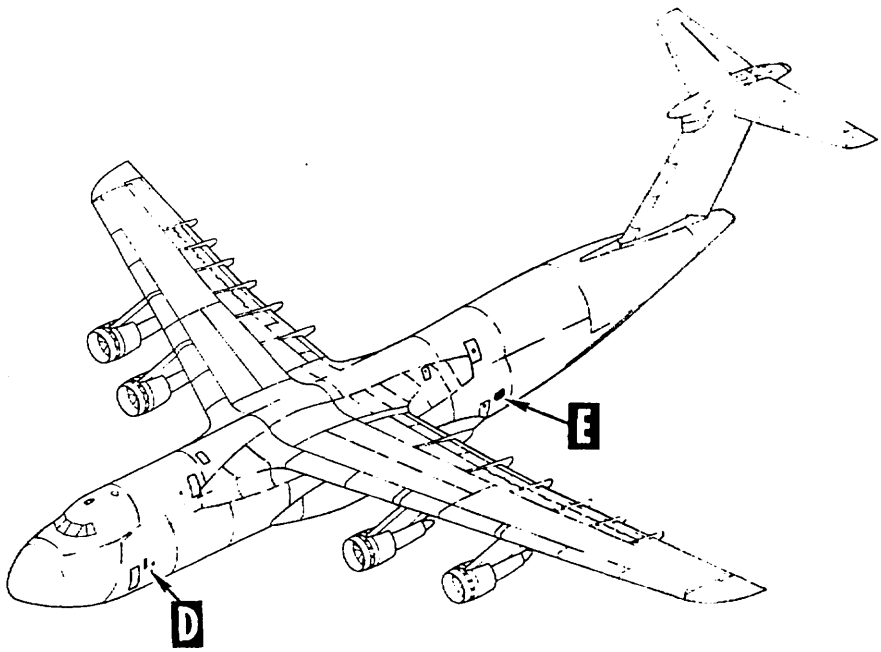

NOTE

1 WINCH SELECT SWITCH REMOVED ON AIRPLANES MODIFIED BY T.O. 1305.

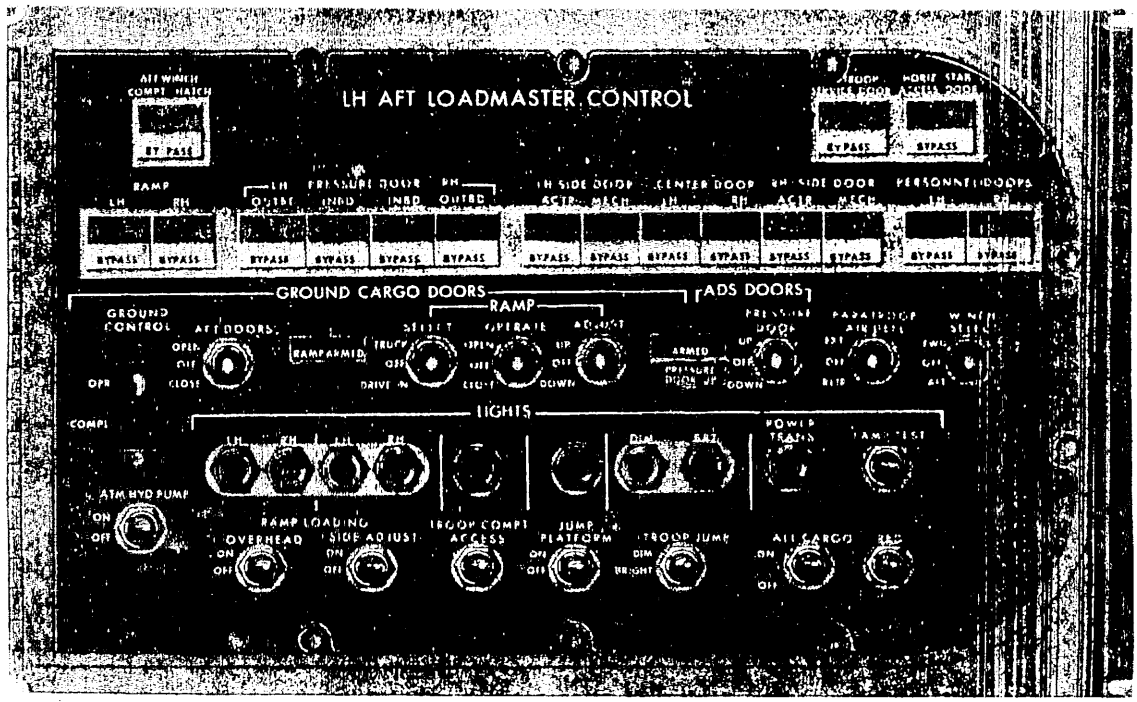

E

LH AFT LOADMASTER'S CONTROL PANEL

C5A-1-X3/0-071-2

Figure 1-121. (Sheet 2 of 2)

CARGO DOORS, VISOR AND RAMP CONTROL PANELS

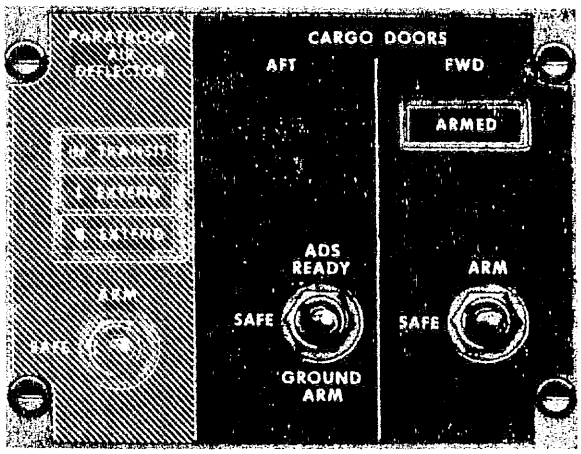

A

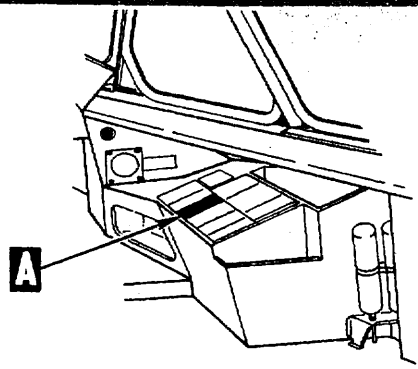

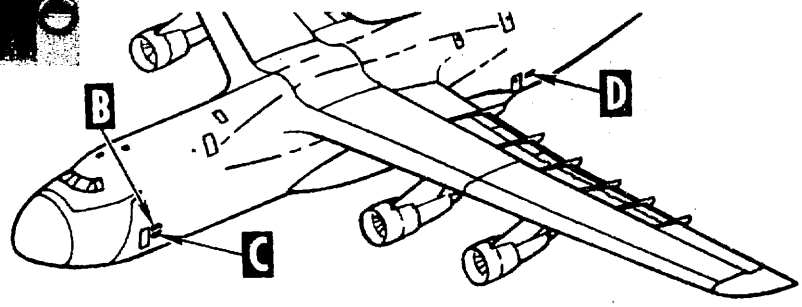

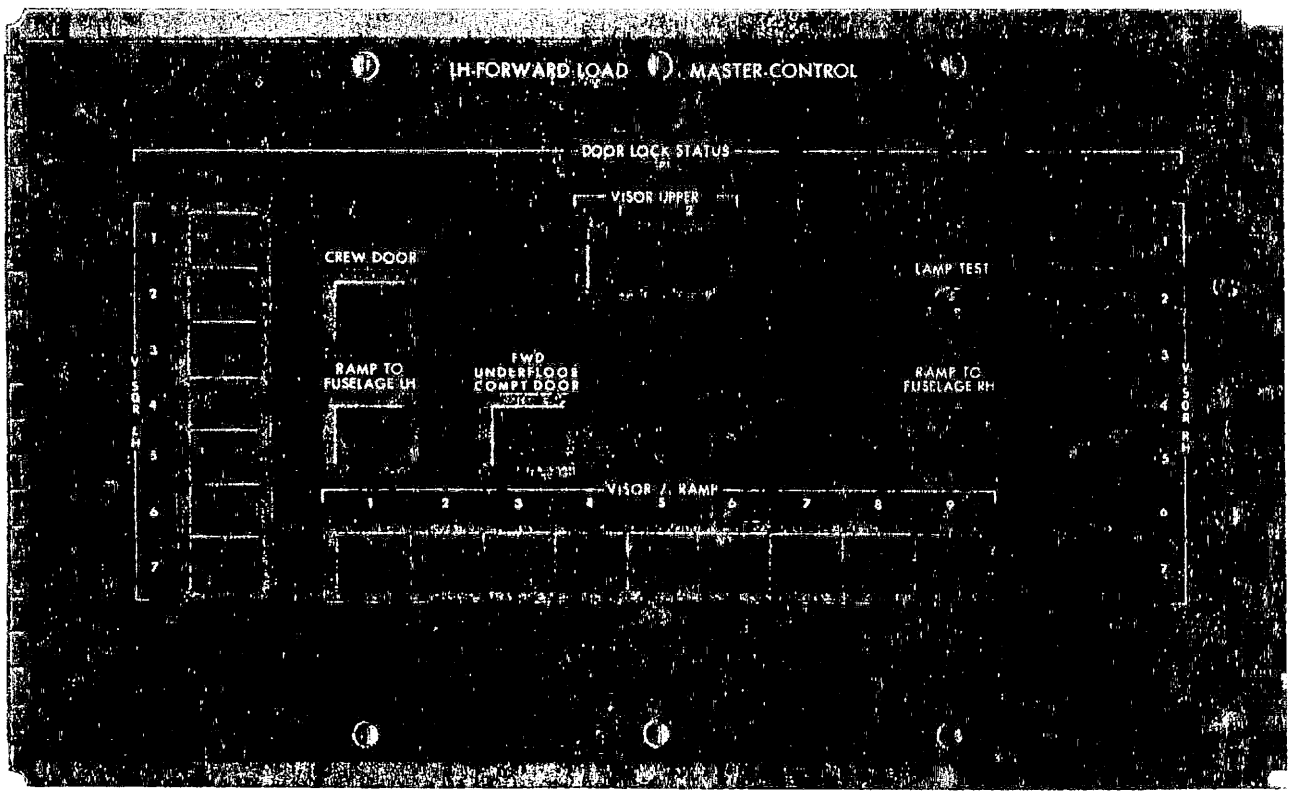

B

LH FORWARD LOADMASTER DOOR LOCK STATUS INDICATOR PANEL

C5A-1-3-069-1

Figure 1-122. (Sheet 1 of 2)

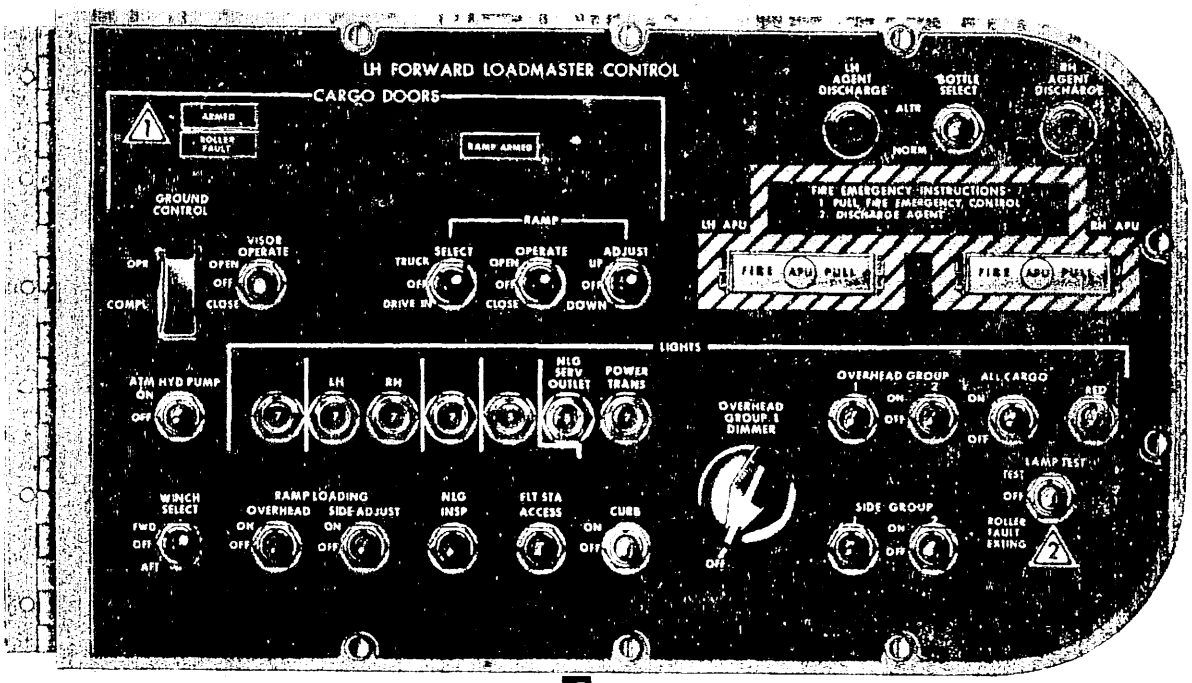

C

LH FORWARD LOADMASTER CONTROL PANEL

NOTE

1. ON 70168, 00450 AND UP AND AIRPLANES MODIFIED BY T.O. 1259, "ROLLER FAULT" LIGHT ADDED.
2. TWO POSITION (ON OFF) LAMP TEST SWITCH ON 68304, 68307, 70167 AND 70170 THRU 00449 NOT MODIFIED BY T.O. 1259.
3. WINCH SELECT SWITCH REMOVED ON AIRPLANES MODIFIED BY T.O. 1305.

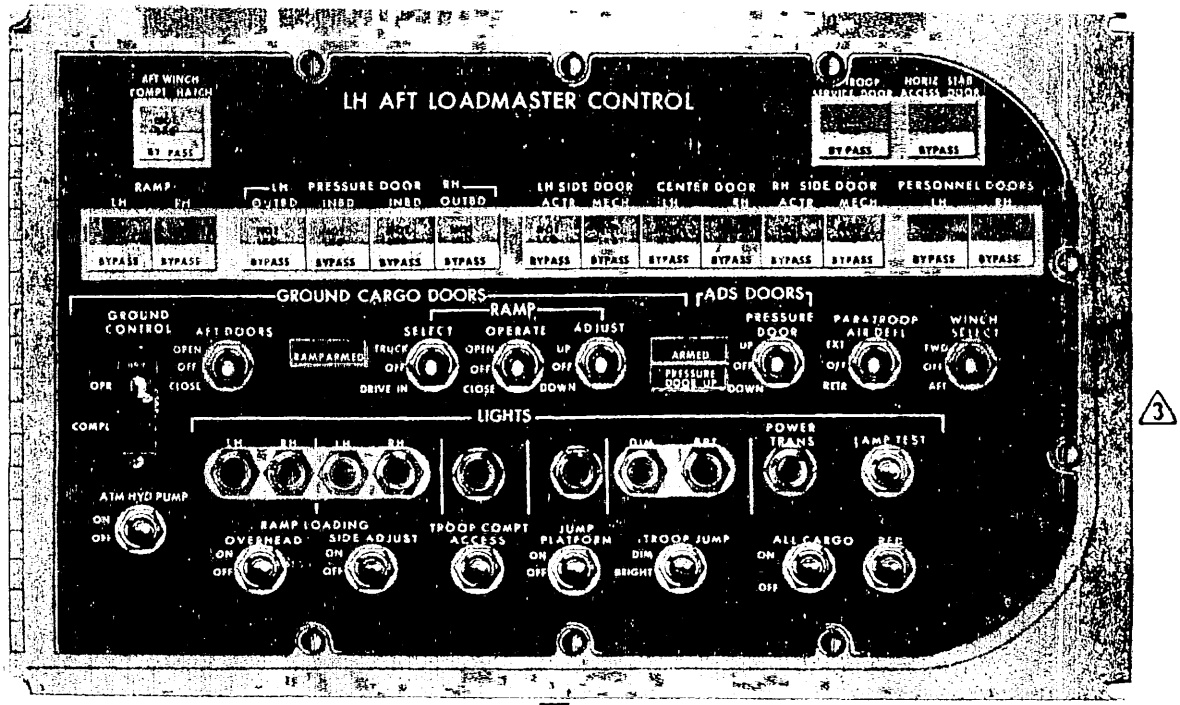

D

LH AFT LOADMASTER CONTROL PANEL

C5A-1-X3/0-069-2

Figure 1-122. (Sheet 2 of 2)

CARGO DOORS MANUAL OVERRIDE VALVES

CAUTION

1. ALL MANIFOLD HANDLES MUST BE IN "RELEASED" POSITION PRIOR TO ARMING THE MANIFOLD.
2. VERIFY POSITION AND STATUS OF DOORS, RAMPS, AND LOCKS PRIOR TO REMOVAL OF "GUARD" ON ARM VALVE.
3. OPERATION BY QUALIFIED PERSONNEL ONLY.

4E72093-101A

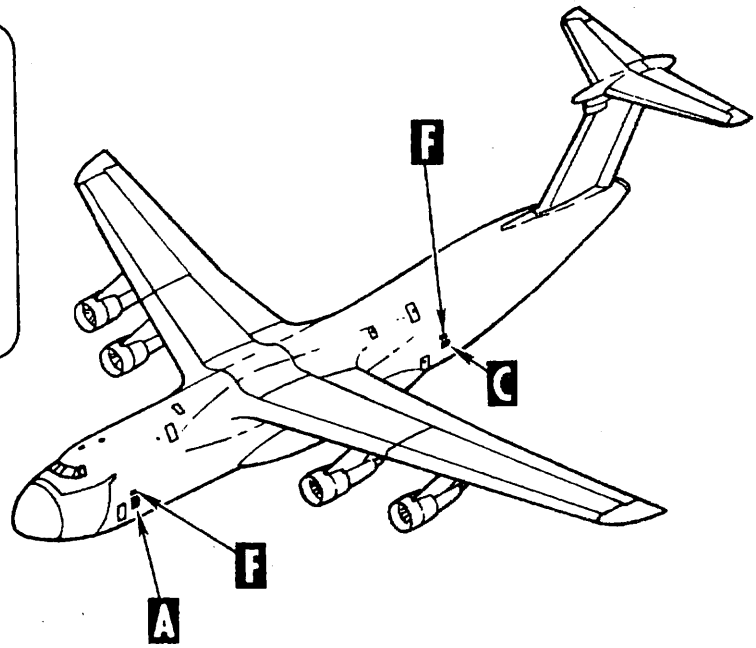

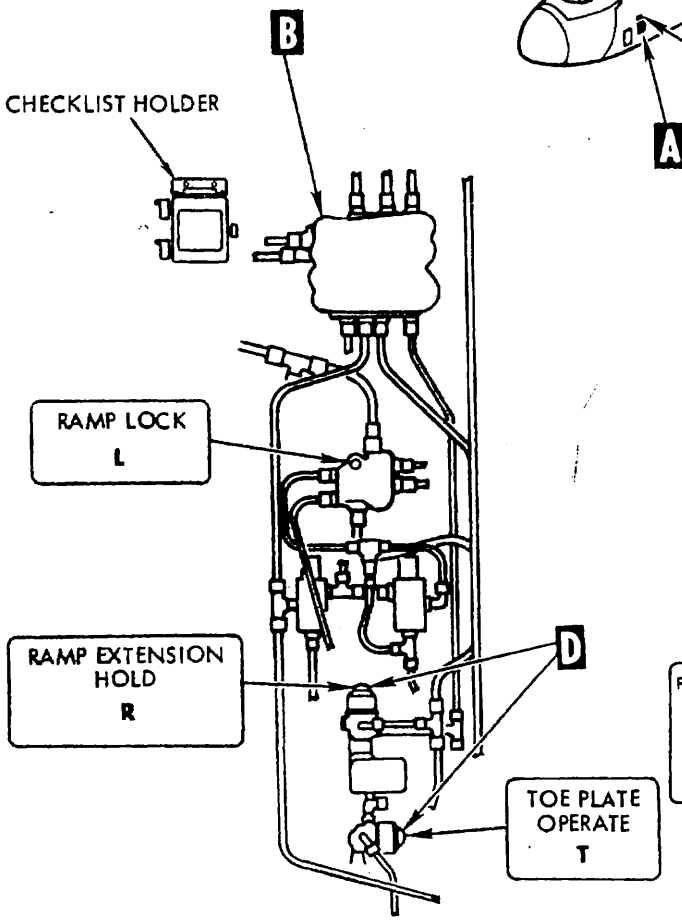

ARM	VISOR UNLOCK	VISOR DOWN AND UNLOCK	VISOR UP	VISOR LOCK
A	C	D	E	B

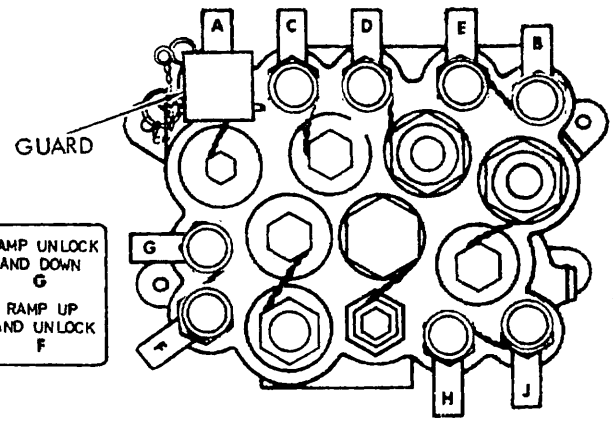

RAMP UNLOCK AND DOWN
G

RAMP UP AND UNLOCK
F

RAMP EXTENSION DOWN	RAMP EXTENSION UP
H	J

B

FORWARD CARGO DOOR MANUAL OVERRIDE VALVES

C5A-1-X3/4-146-1

Figure 1-123. (Sheet 1 of 3)

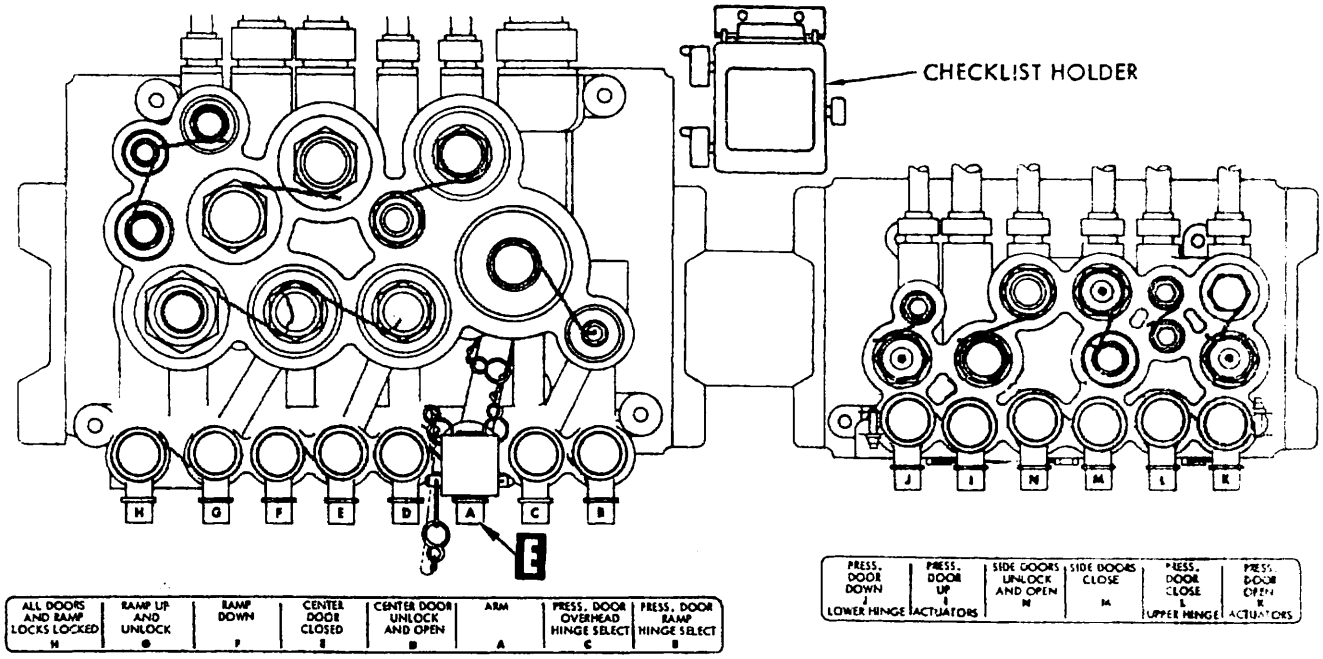

C

AFT CARGO DOOR MANUAL OVERRIDE VALVES

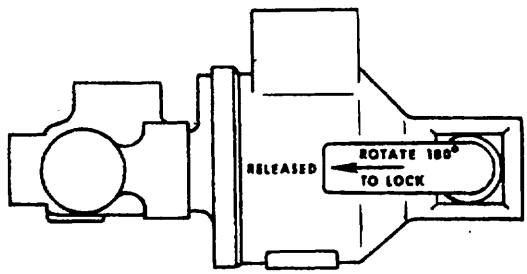

VIEW SHOWING VALVE LEVER IN RELEASED (NON-OPERATING) POSITION

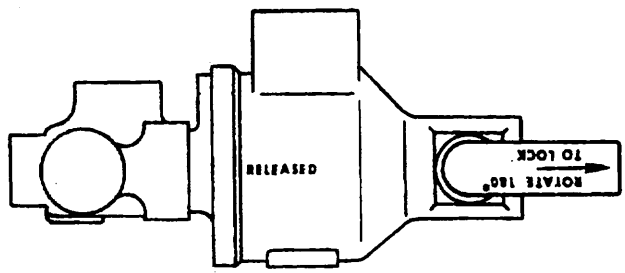

VIEW SHOWING VALVE LEVER IN LOCKED (OPERATING) POSITION

D

TYPICAL VIEW OVERRIDE SELECTION VALVE OPERATION

C5A-1-X2/0-146-2

Figure 1-123. (Sheet 2 of 3)

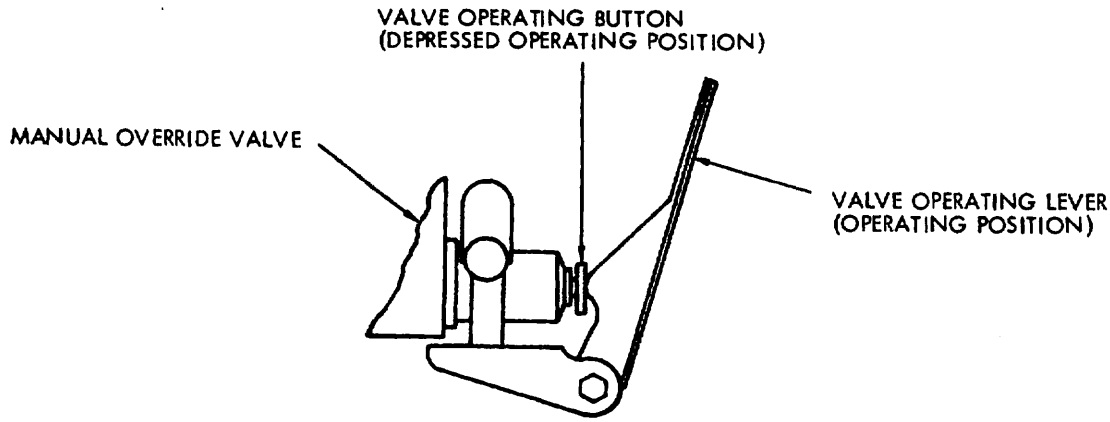

VIEW SHOWING VALVE A OPERATING LEVER
IN OPERATING POSITION (VALVE BUTTON DEPRESSED)
GUARD REMOVED

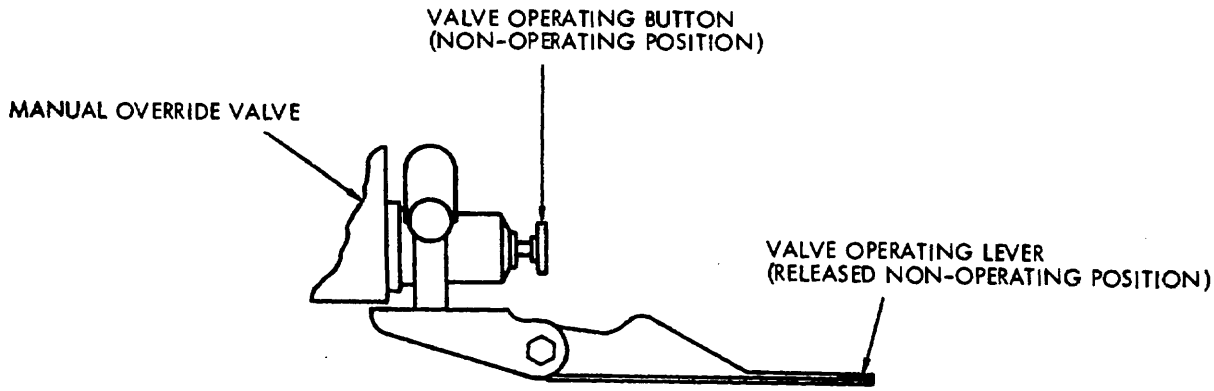

VIEW SHOWING VALVE A OPERATING LEVER
IN RELEASED NON-OPERATING POSITION
(VALVE BUTTON EXTENDED) GUARD REMOVED

E

C5A-1-X2/0-146-3

Figure 1-123. (Sheet 3 of 3)

AFT PRESSURE DOOR UPPER HINGE AND INTERLOCK MECHANISM

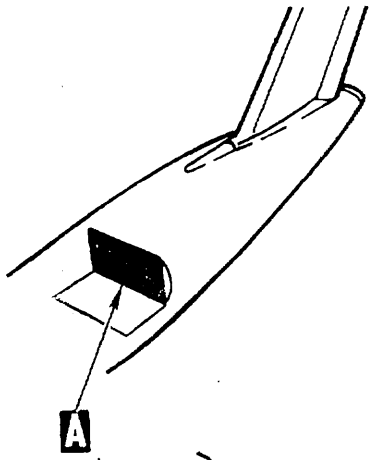

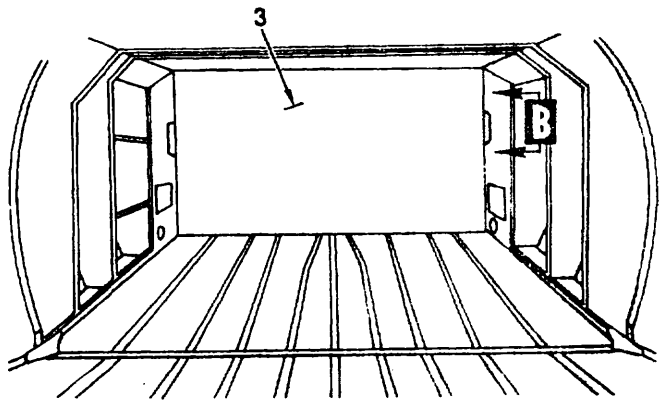

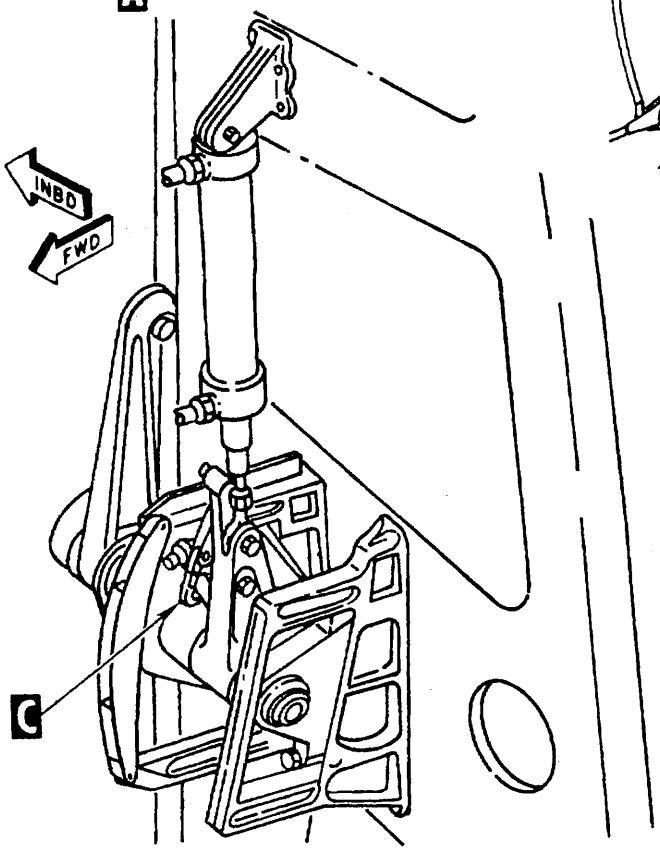

(L/H SHOWN, R/H OPPOSITE)

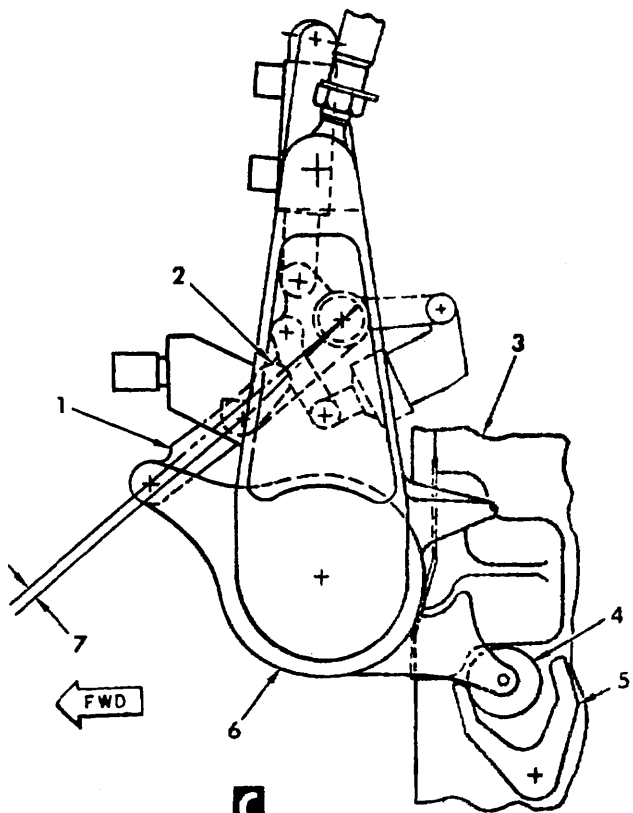

UNSAFE POSITION
(UPPER HINGE LINKS SHOWN NOT IN OVERCENTER POSITION)

1. LINK
2. LINK
3. PRESSURE DOOR
4. ROLLER
5. CAM
6. UPPER HINGE
7. LINKS (UNLOCKED)

C5A-1-X3/3-179-1

Figure 1-124. (Sheet 1 of 2)

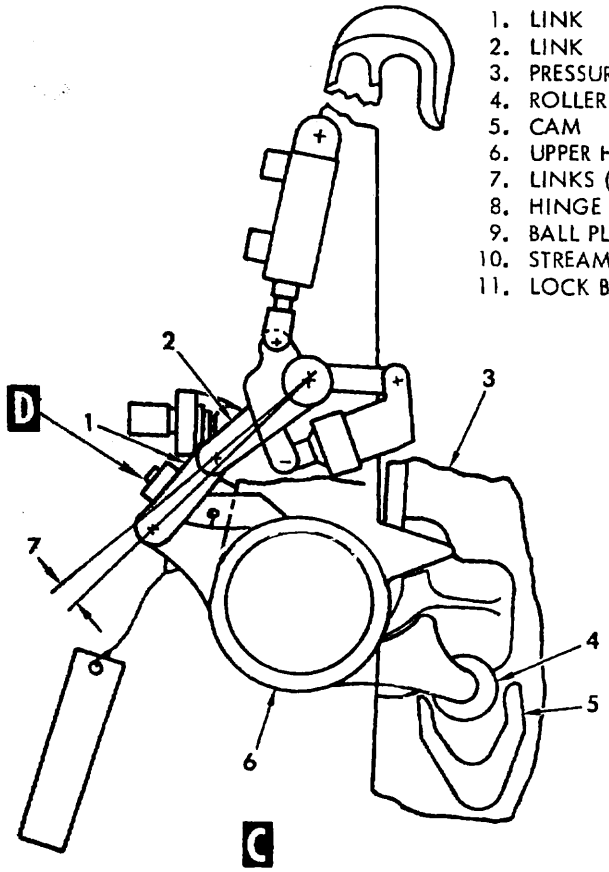

C

LOCKED, SAFE POSITION
(UPPER HINGE LINKS SHOWN OVERCENTER
WITH LOCK BLOCK INSTALLED)

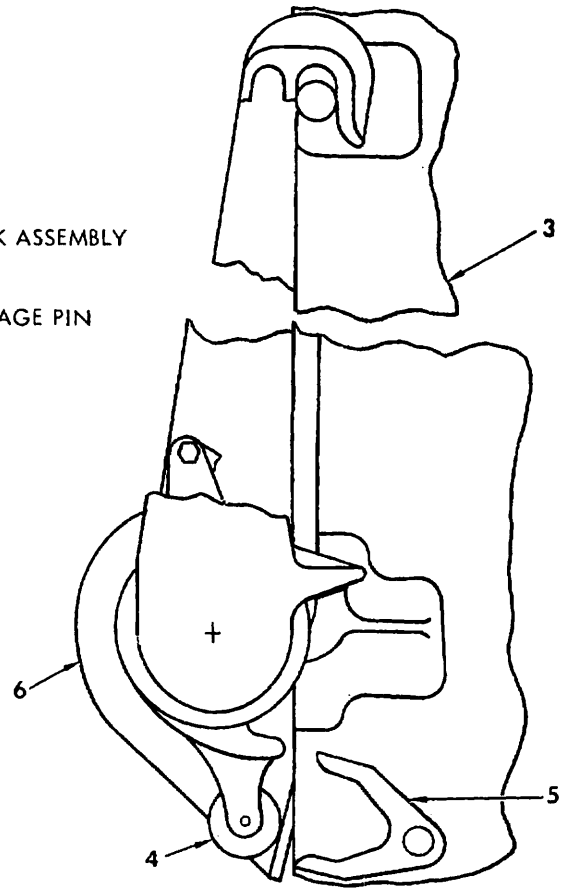

C

UNLOCKED, UNSAFE POSITION
(ROLLER SHOWN DISENGAGED FROM CAM)

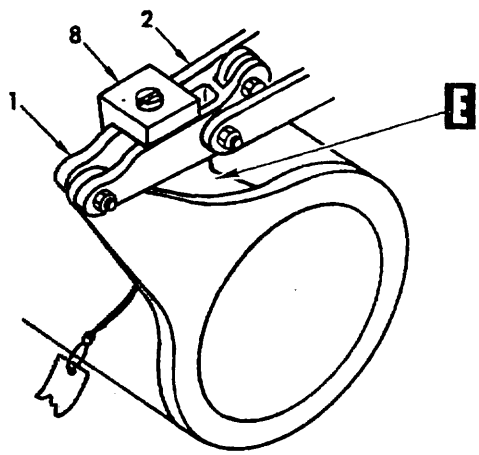

D

VIEW SHOWING HINGE LOCK BLOCK INSTALLED
HOLDING LINKS OVERCENTER

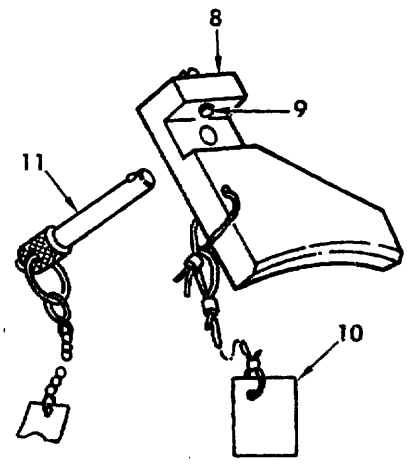

E

HINGE LOCK BLOCK ASSEMBLY

C5A-1-X3/3-179-2

Figure 1-124. (Sheet 2 of 2)

TYPICAL TROOP SEATING ARRANGEMENT

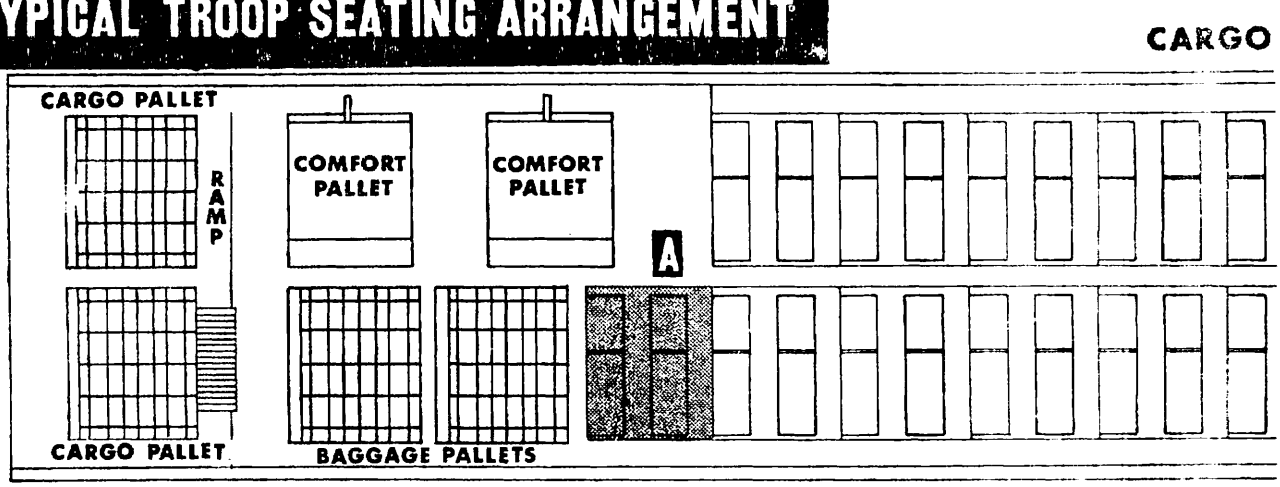

SEATING ARRANGEMENT WITH COMFORT PALLETS - 270 SEATS ON 27 - TEN SEAT PALLETS

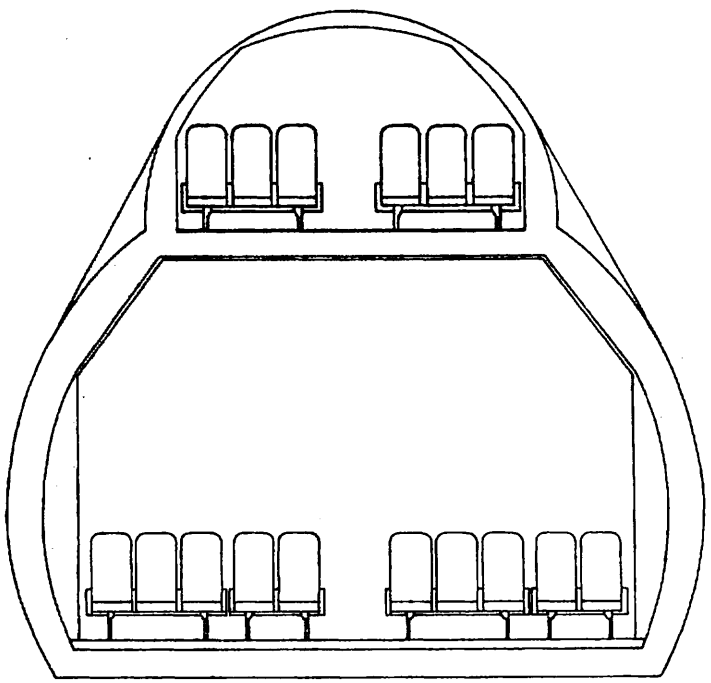

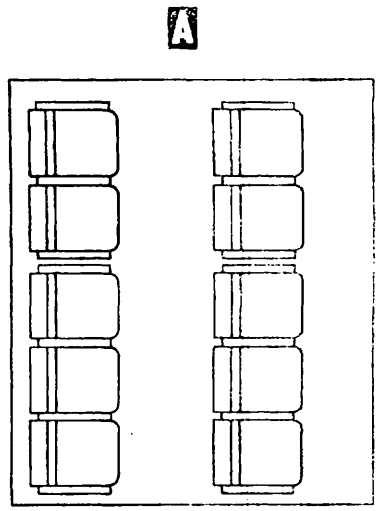

SEAT PALLETS

C5A-1-0-372-1

Figure 1-125. (Sheet 1 of 2)

COMPARTMENT

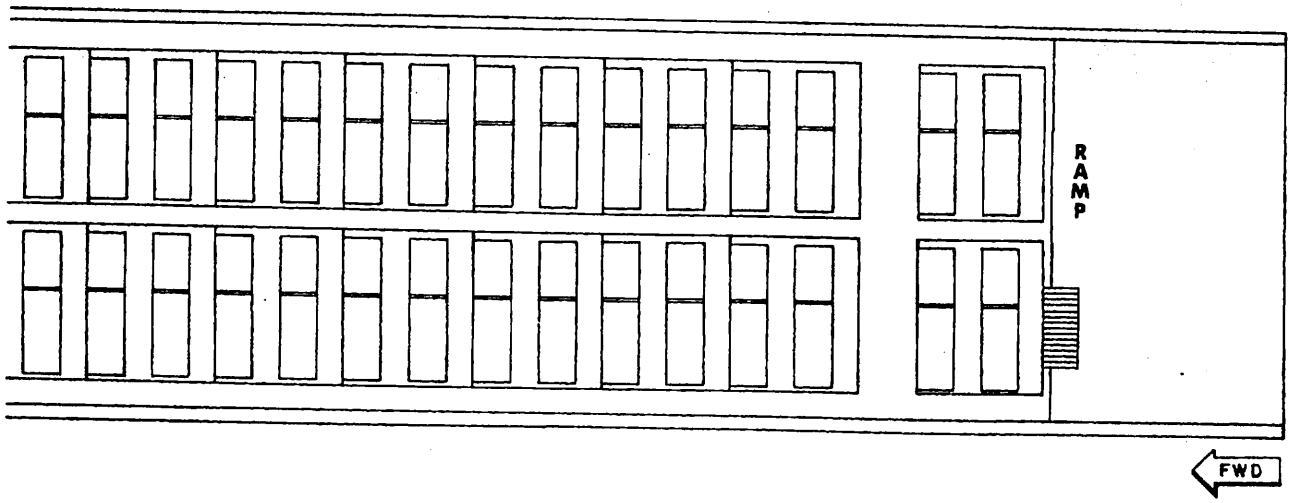

TROOP COMPARTMENT

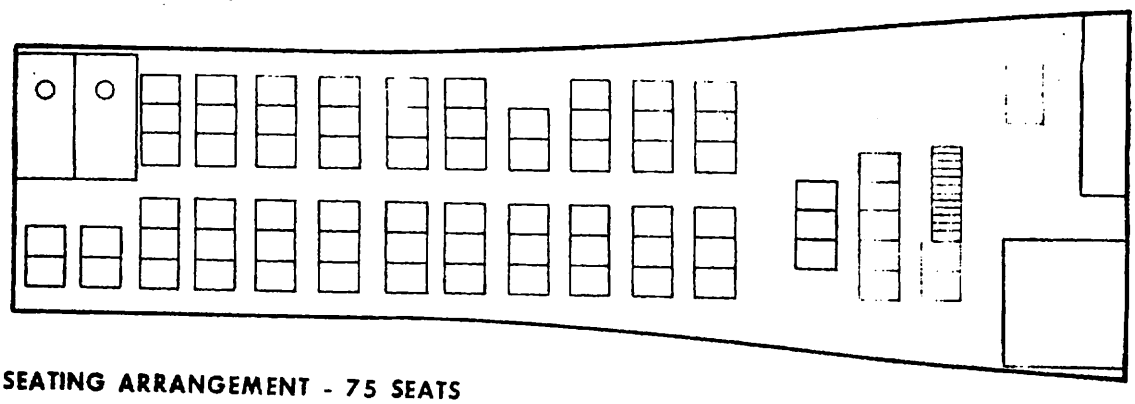

SEATING ARRANGEMENT - 75 SEATS

C5A-1-X2/0-072-2

Figure 1-125. (Sheet 2 of 2)

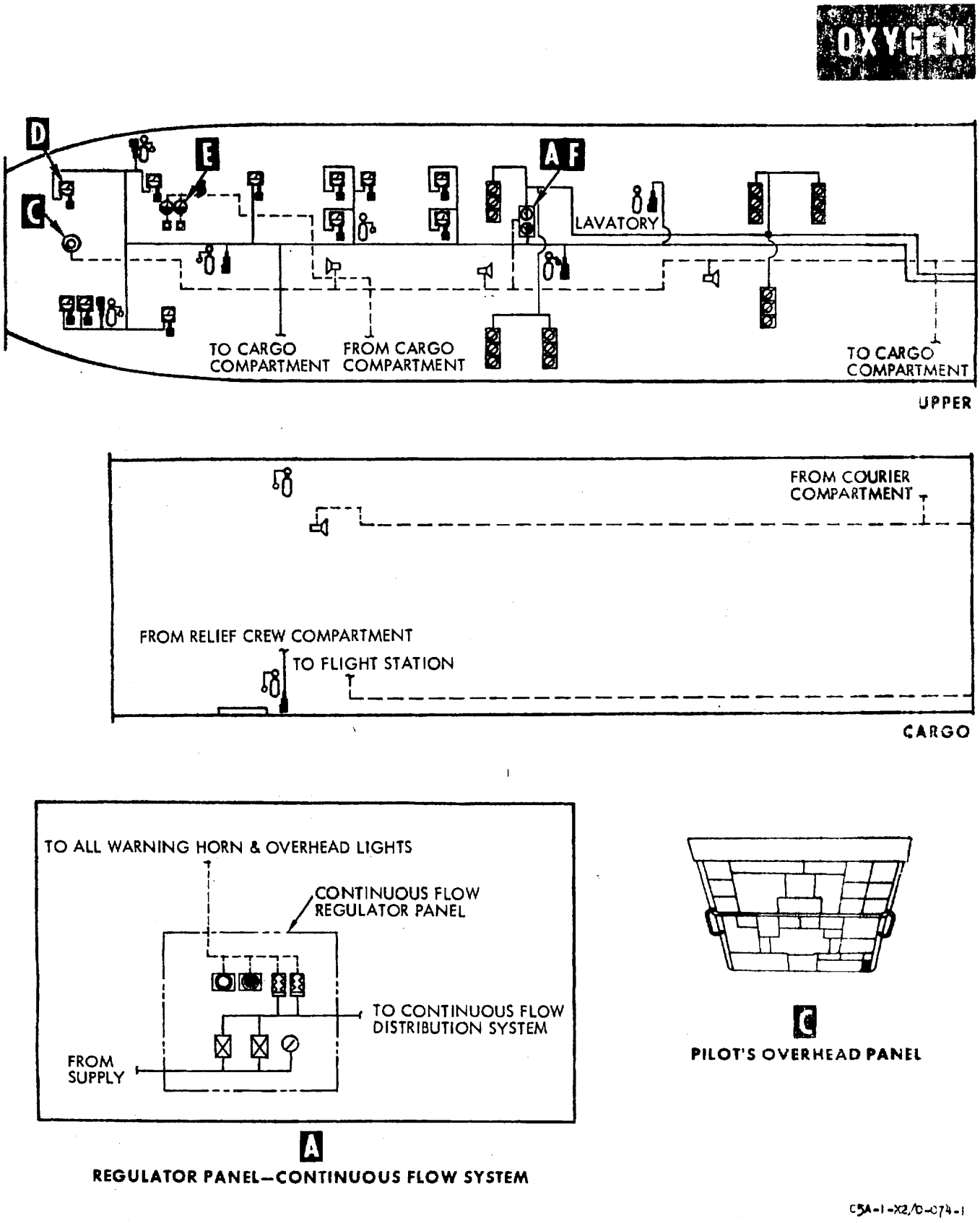

Figure 1-126. (Sheet 1 of 5)

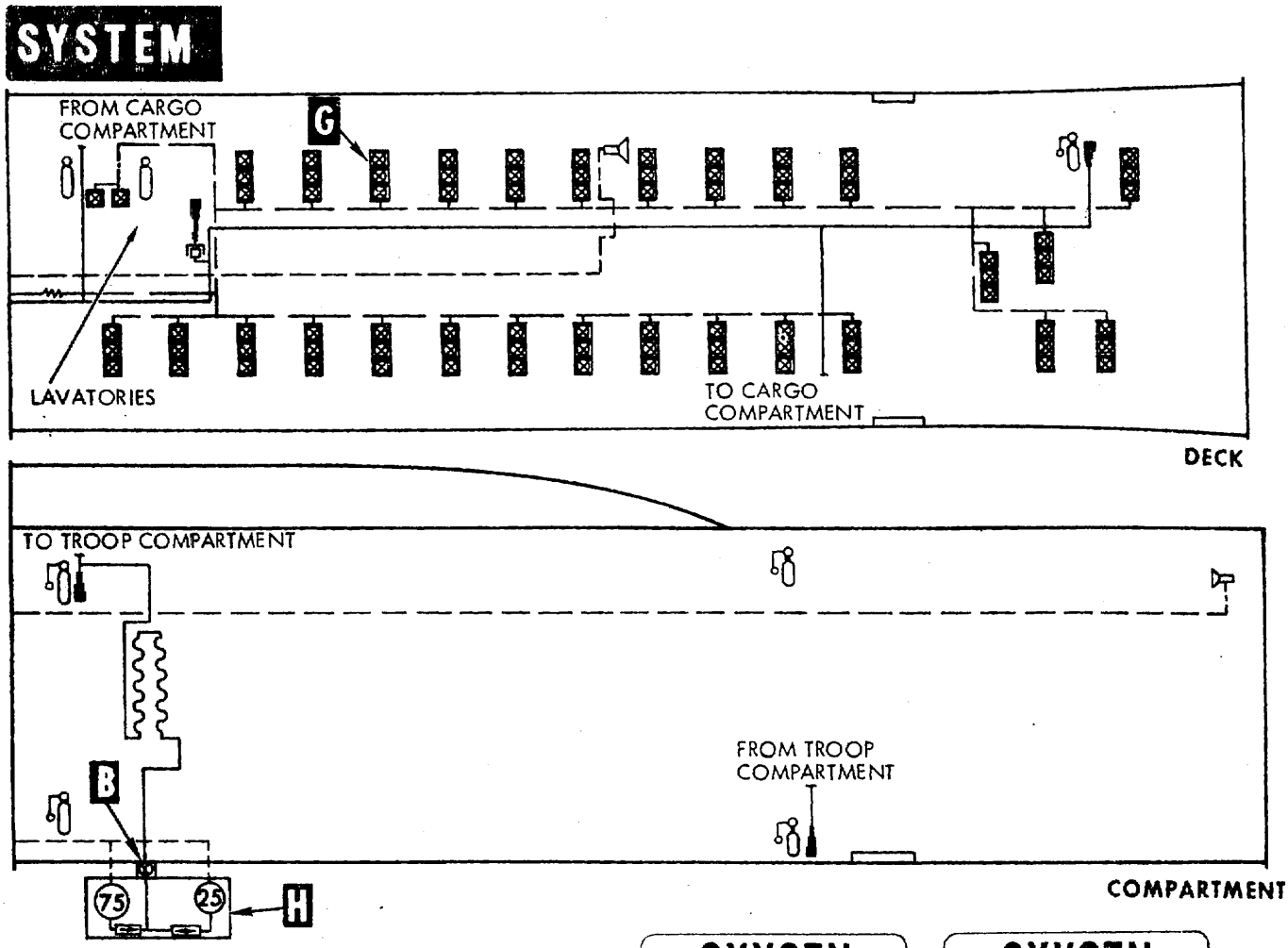

NOTE

△ PRESSURE RELIEF VALVE ADDED ON 90025 AND UP AND AIRPLANES MODIFIED BY T.O. 935.

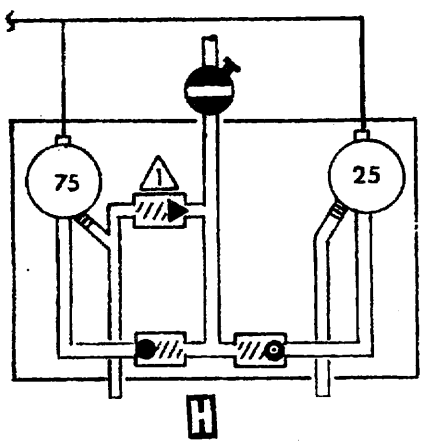

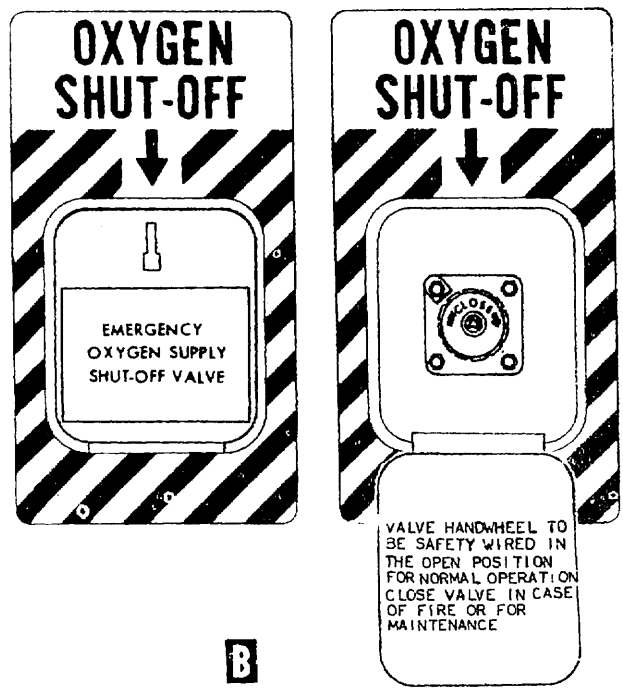

Figure 1-126. (Sheet 2 of 5)

C

PILOT'S OVERHEAD PANEL

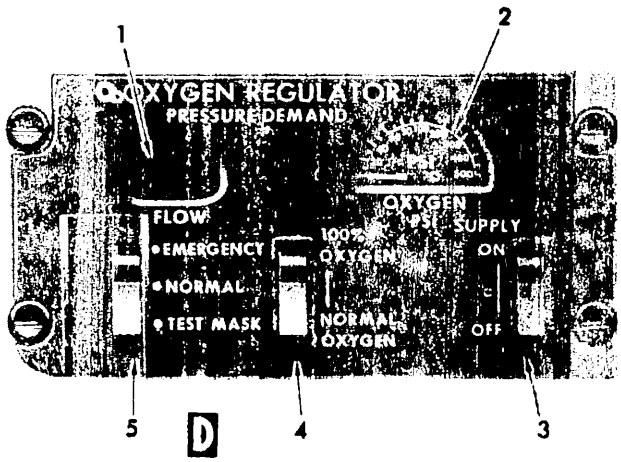

D

OXYGEN REGULATOR (TYPICAL 11 PLACES)

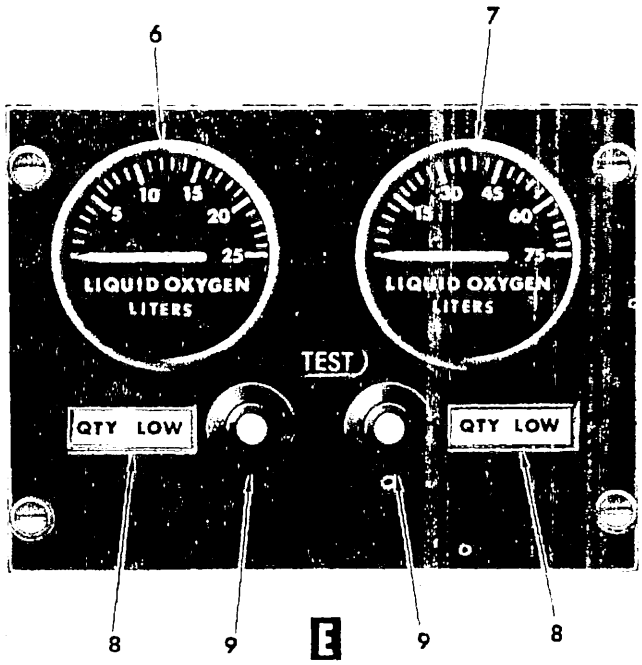

E

FLIGHT ENGINEER'S OXYGEN SYSTEM PANEL

Figure 1-126. (Sheet 3 of 5)

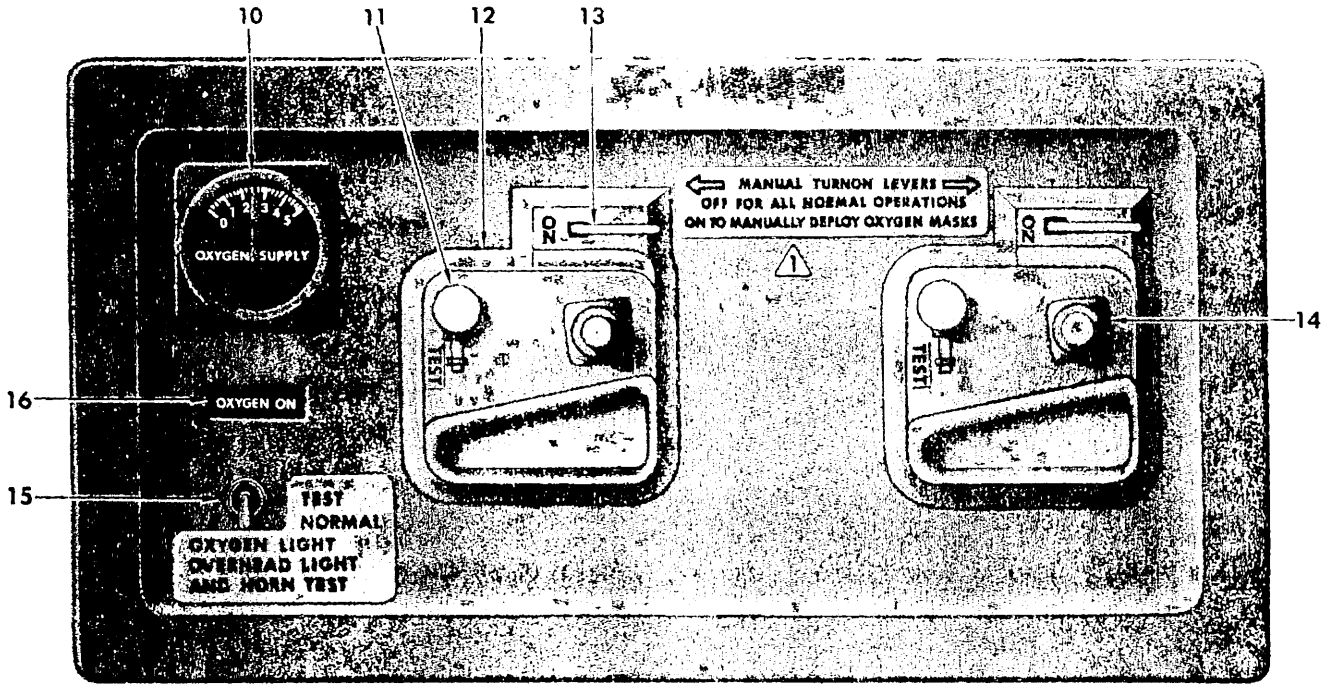

F

CONTINUOUS FLOW OXYGEN REGULATOR PANEL

1. VISUAL FLOW INDICATOR
2. PRESSURE GAGE
3. SUPPLY LEVER
4. DILUTER LEVER
5. EMERGENCY TOGGLE LEVER
6. LIQUID OXYGEN INDICATOR (25-LITER)
7. LIQUID OXYGEN INDICATOR (75-LITER)
8. LIQUID OXYGEN QUANTITY LOW INDICATORS
9. TEST SWITCHES
10. SUPPLY PRESSURE GAGE
11. CABIN ALTITUDE SENSING AND TEST PORT
12. CONTINUOUS FLOW OXYGEN REGULATOR
13. REGULATOR MANUAL TURN-ON LEVER
14. REGULATOR ON-OFF INDICATOR
15. TEST SWITCH
16. OXYGEN ON LIGHT
17. OXYGEN MASK STORAGE CONTAINER
18. MASK HOSE
19. HEAD STRAP
20. OXYGEN MASK
21. LANYARD
22. CONTAINER DOOR

NOTE

1 LEVER POSITION DECAL INSTALLED ON 90027 AND UP AND AIRPLANES MODIFIED BY T.O. 1421.

C5A-1-X3/0-074-4

Figure 1-126. (Sheet 4 of 5)

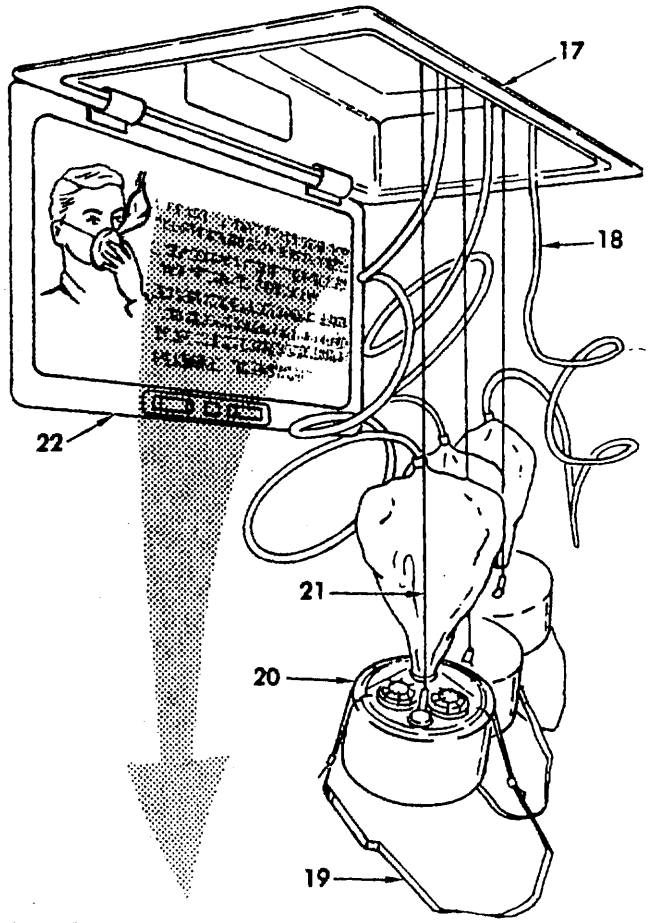

1. GRASP MASK BY FACE CONE AND PULL DOWN TO OPEN OXYGEN VALVE
2. PLACE FACE CONE OVER MOUTH AND NOSE AS SHOWN.
3. POSITION ELASTIC HEAD BAND AND ADJUST MASK FOR MINIMUM DRAFT IN EYES DURING EXHALATION.
4. BREATHE NORMALLY.

G

OVERHEAD OXYGEN MASK STORAGE CONTAINER

- LIQUID OXYGEN CONVERTER 25-LITER
- LIQUID OXYGEN CONVERTER 75-LITER
- LINE VALVE
- PORTABLE RECHARGER
- MASK-REGULATOR TUBING
- REGULATOR PRESSURE DEMAND
- QUANTITY INDICATOR
- REGULATOR, AUTOMATIC, CONTINUOUS FLOW
- PRESSURE GAGE
- OXYGEN CONTROL PANEL
- PRESSURE SWITCH
- WARNING HORN
- CHECK VALVE
- LOW QUANTITY WARNING LIGHT
- HORN SHUTOFF SWITCH
- OXYGEN ON LIGHT
- OXYGEN LIGHT AND HORN TEST SWITCH
- MALE / FEMALE — QUICK DISCONNECT
- AUTOMATIC MASK PRESENTATION 3 UNIT
- AUTO MASK PRESENT. 3 UNIT KIT INSTL
- AUTO MASK PRESENT. 1 UNIT KIT INSTL
- PORTABLE UNIT-CONTINUOUS FLOW WITH MASK ATTACHED
- PORTABLE UNIT-DEMAND WITH FIRE FIGHTER'S MASK ATTACHED
- DISTRIBUTION LINE
- ELECTRICAL LINE
- WARMING EQUIPMENT
- FLEXIBLE LINE - KIT INSTL
- DISTRIBUTION LINE - KIT INSTL

C5A-1-9-374-5

Figure 1-126. (Sheet 5 of 5)

MODEL: C-5A
TF39-GE-1 ENGINES

DATE: OCTOBER 1970

DATA BASIS: MIL-19326E, TABLES 1, 2, 3, AND 5.

OXYGEN DURATION CHART

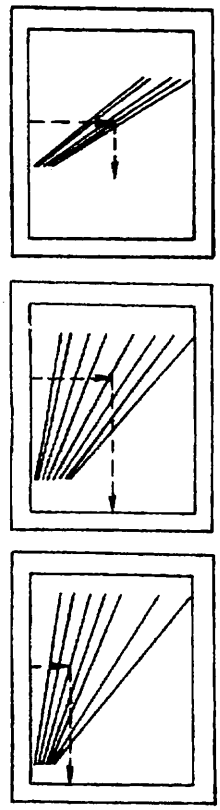

CREW REGULATORS ON NORMAL

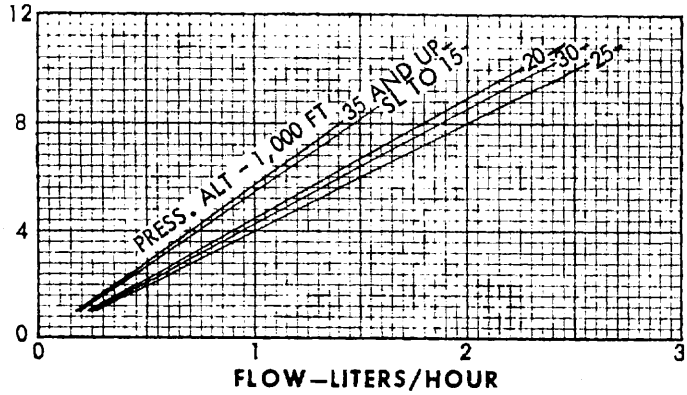

CREW REGULATORS ON 100 PERCENT

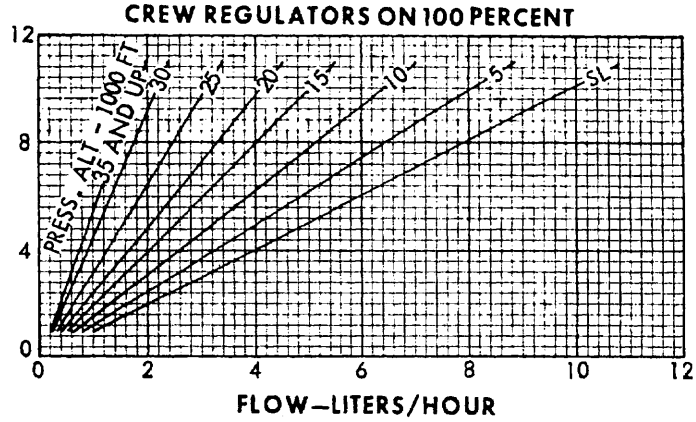

PASSENGERS ON CONTINUOUS FLOW

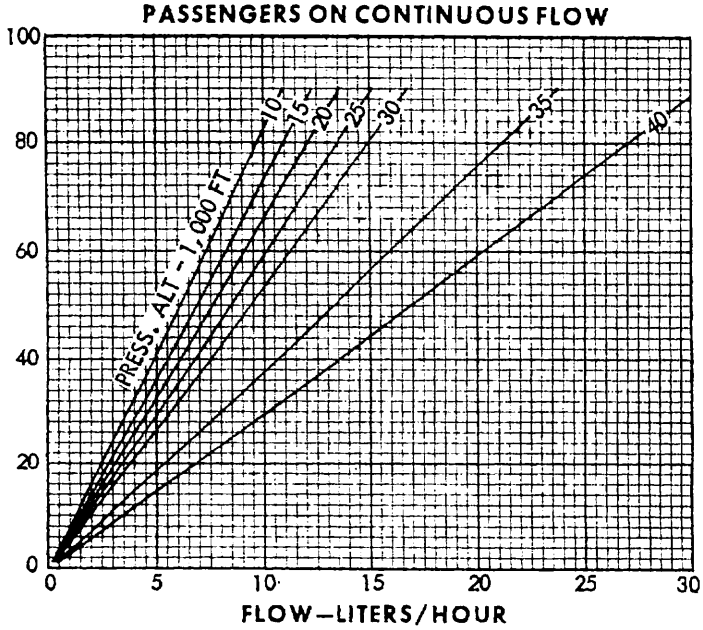

C5A-1-X3/0-076

Figure 1-127.

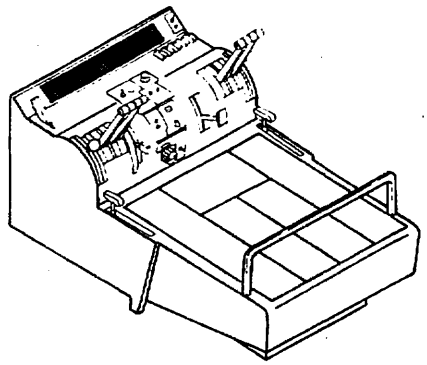

ANNUNCIATOR PANEL

NOTE

1. "SPARE" ON AIRPLANES MODIFIED BY T.O. 1346.
2. "SPARE" ON AIRPLANES NOT MODIFIED BY T.O. 1387.

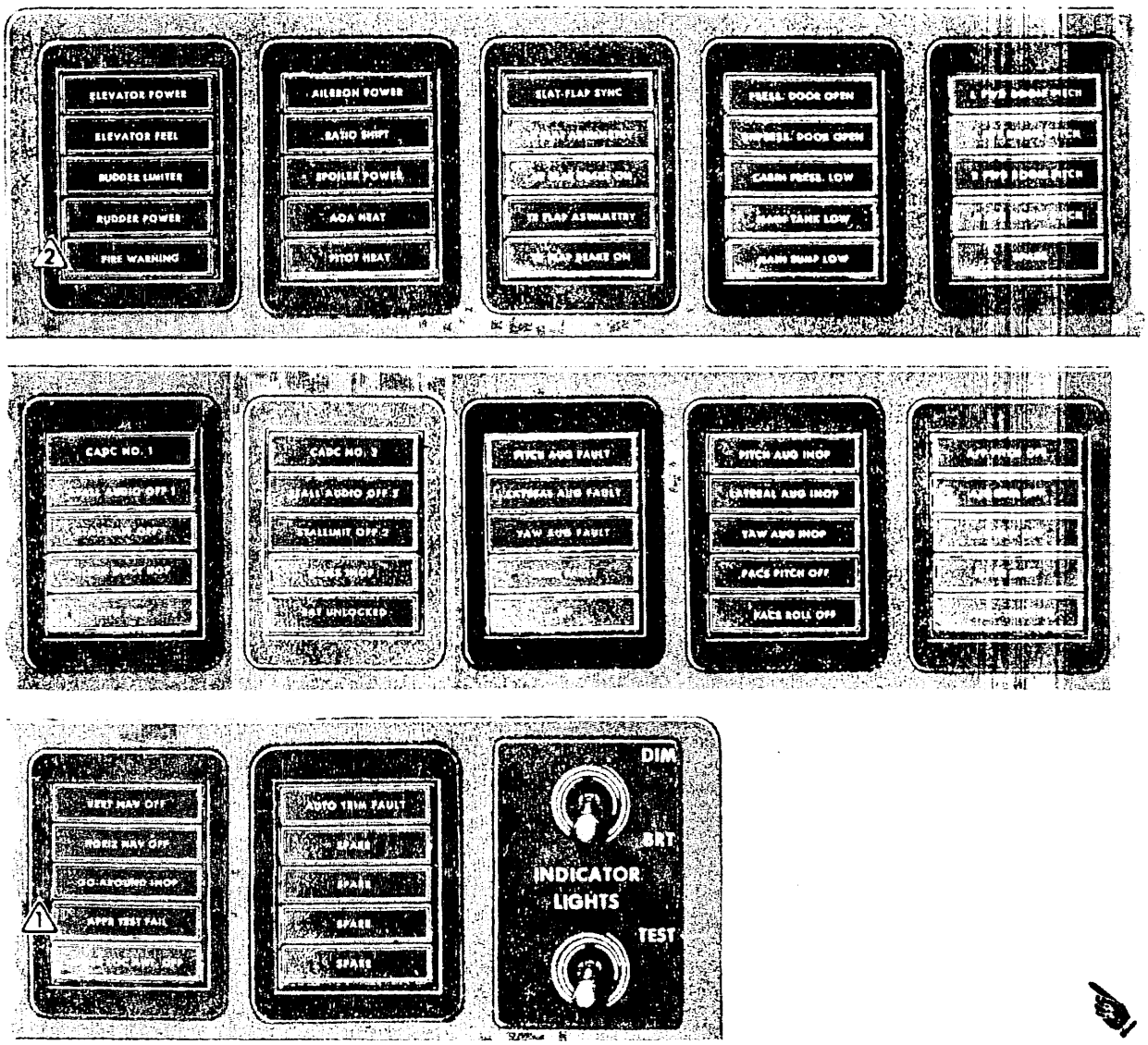

C5A-1-XH/1-130

Figure 1-128.

SMOKE DETECTION SYSTEM CONTROL AND INDICATOR PANELS

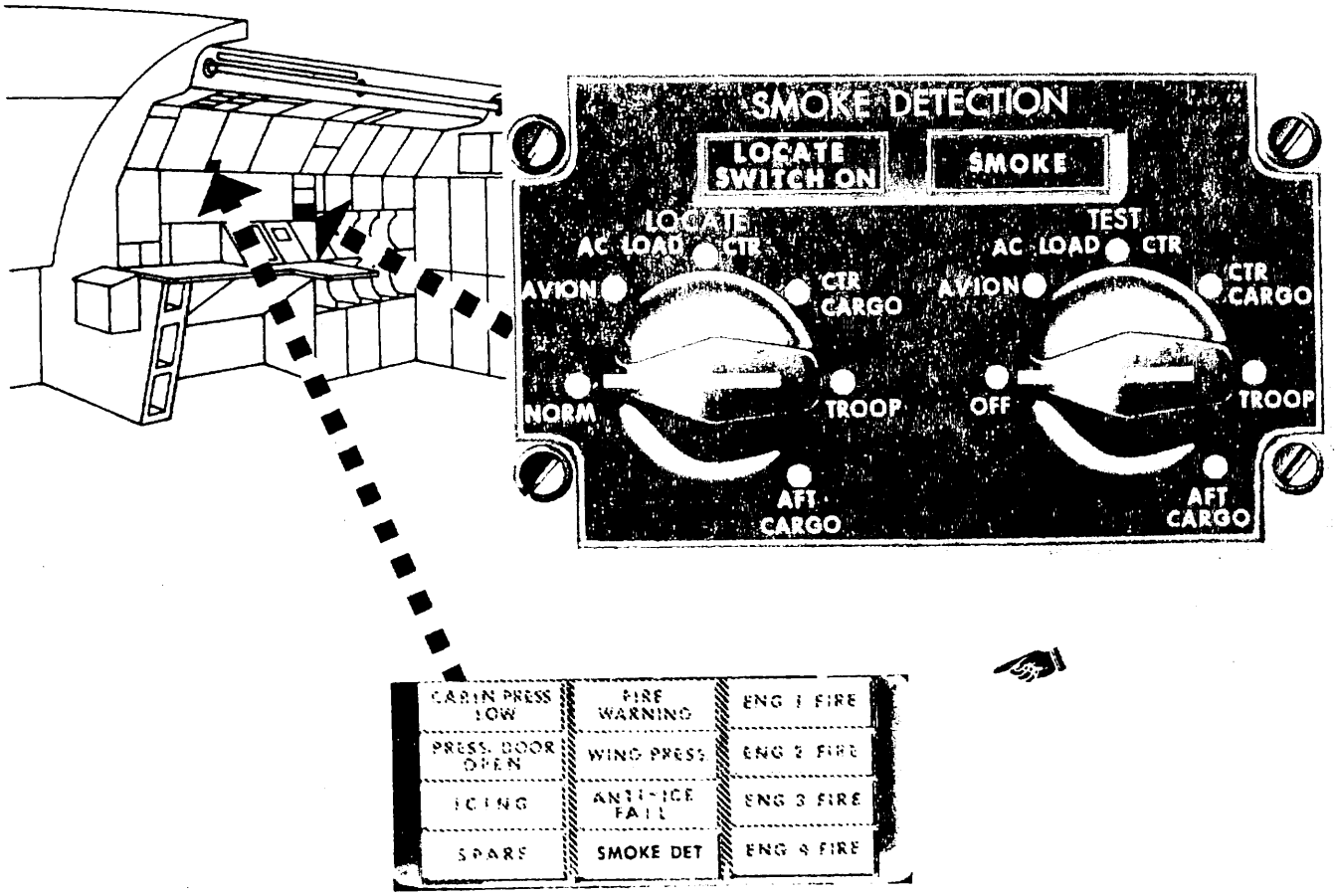

C5A-1-X4/1-097

Figure 1-129.

FLIGHT CREW SEATS

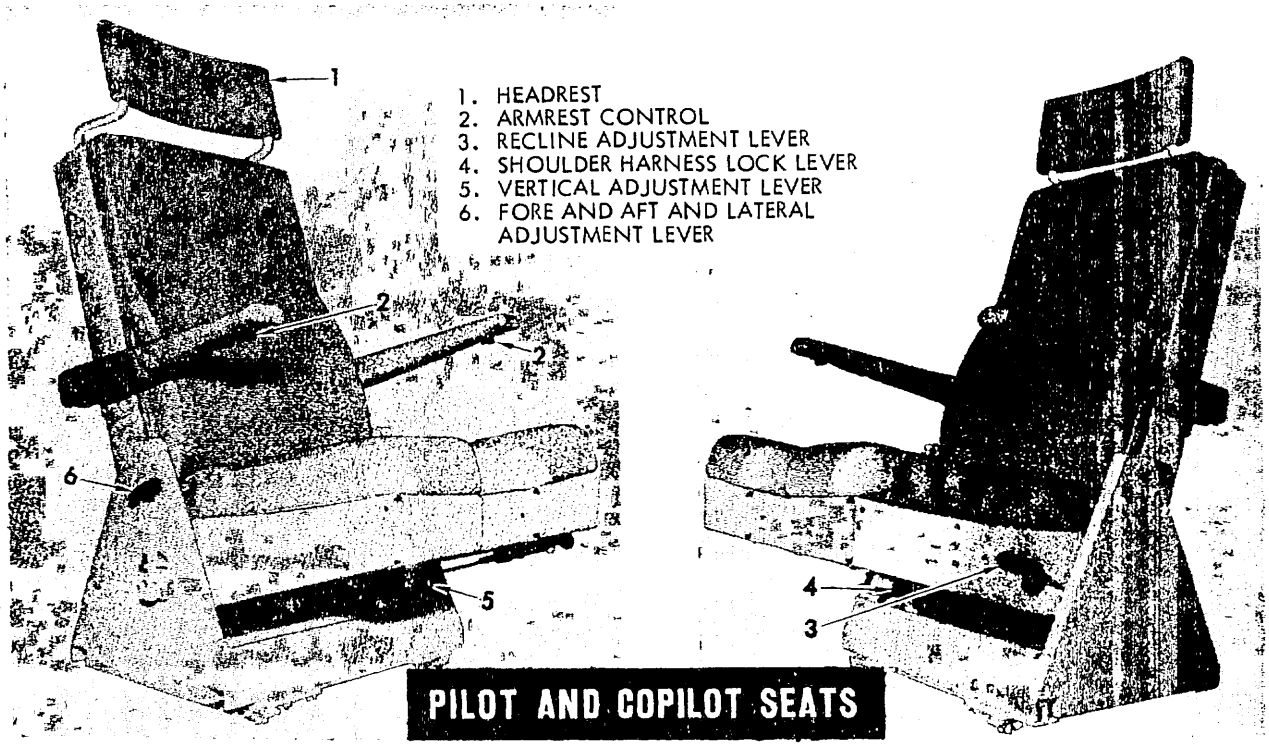

PILOT AND COPILOT SEATS

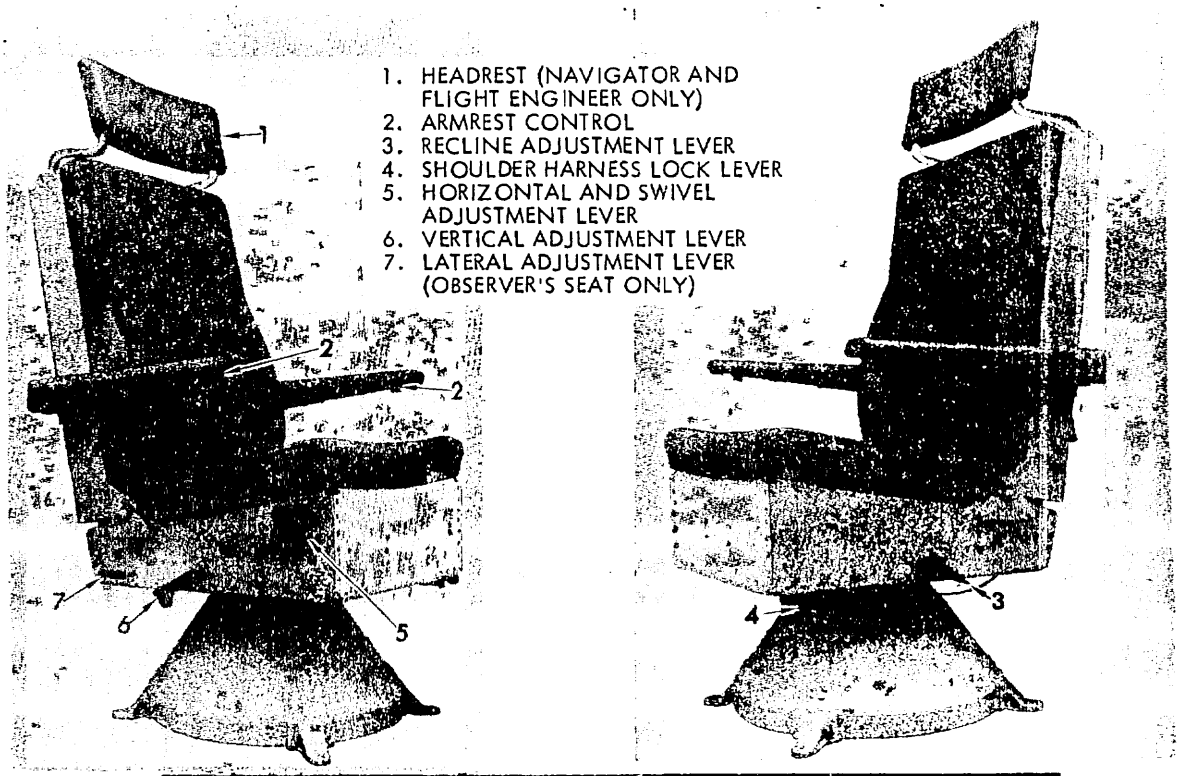

NAVIGATOR, FLIGHT ENGINEER AND OBSERVER SEATS

C5A-1-X2/0-113

Figure 1-130.

STANDARD SYMBOLS

NOTE

1. THE FOLLOWING ARE STANDARD SYMBOLS USED ON THE SCHEMATIC DIAGRAMS.
2. SOLENOID-OPERATED VALVES ARE SHOWN IN THE DE-ENERGIZED POSITION.

MECHANICALLY-OPERATED SELECTOR VALVE

MANUALLY OPERATED SHUTOFF VALVE

SOLENOID OPERATED SHUTOFF VALVE

MOTOR OPERATED SHUTOFF VALVE

PNEUMATICALLY OPERATED SHUTOFF VALVE

MOTOR OPERATED SELECTOR VALVE

CHECK VALVE

PRESSURE RELIEF VALVE

TWO-WAY SHUTTLE VALVE

PRESSURE REDUCER

ONE WAY
PRESSURE REDUCER

SNUBBER

TWO-WAY FLOW REGULATOR

ONE WAY RESTRICTOR

FILTER

FILTER WITH BYPASS

PRESSURE SWITCH

ELECTRICAL ACTUATION

MECHANICAL ACTUATION

TWO-STAGE FLOW REGULATOR

TWO-WAY EQUAL FLOW RESTRICTOR

HYDRAULIC PRIORITY VALVE

C5A-1-X4/0-135

Figure 1-131.

TROOP COMPARTMENT STAIR LADDER

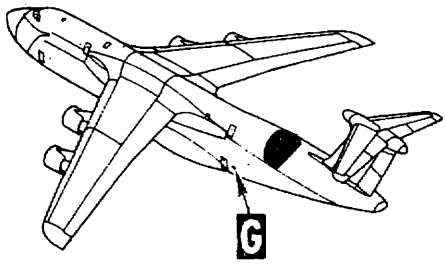

1. ADJUSTABLE FEET
2. ADJUSTABLE FOOT LOCK (2)
3. FOLDING HANDRAIL
4. DRIVER ARM
5. TROOP COMPARTMENT FLOOR
6. FIXED HANDRAIL
7. GATE
8. ROLLER TRACKS

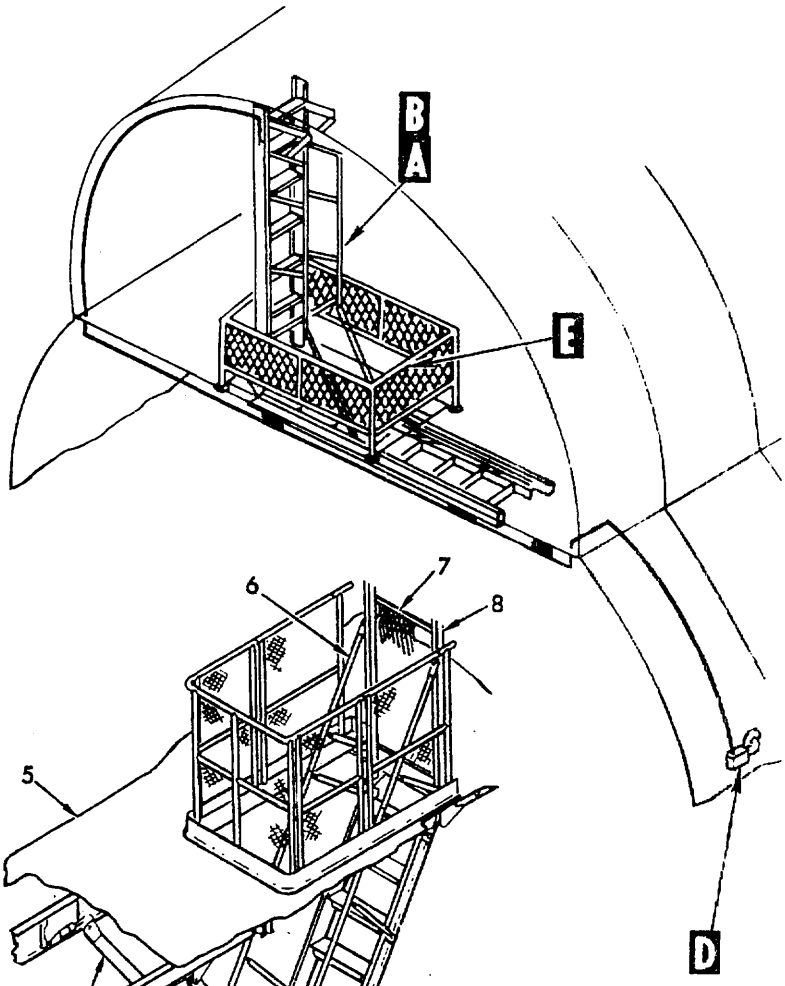

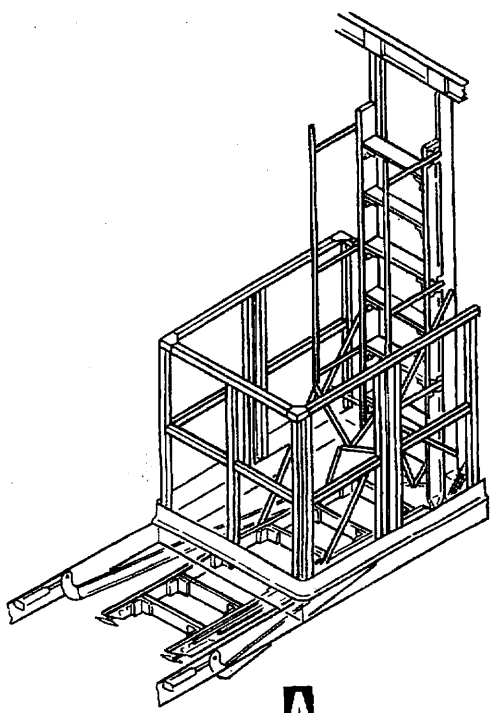

UP (STOWED) POSITION

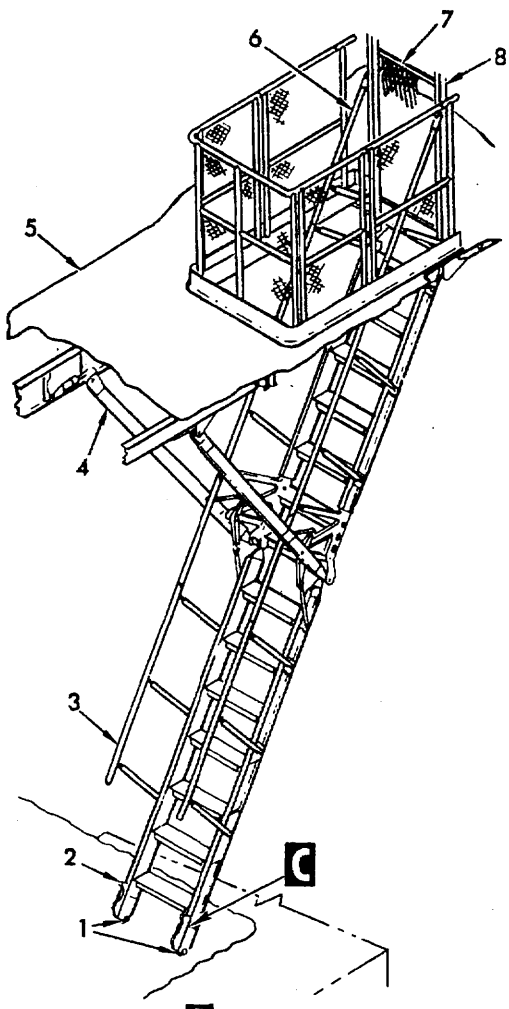

DOWN (EXTENDED) POSITION

Figure 1-132. (Sheet 1 of 2)

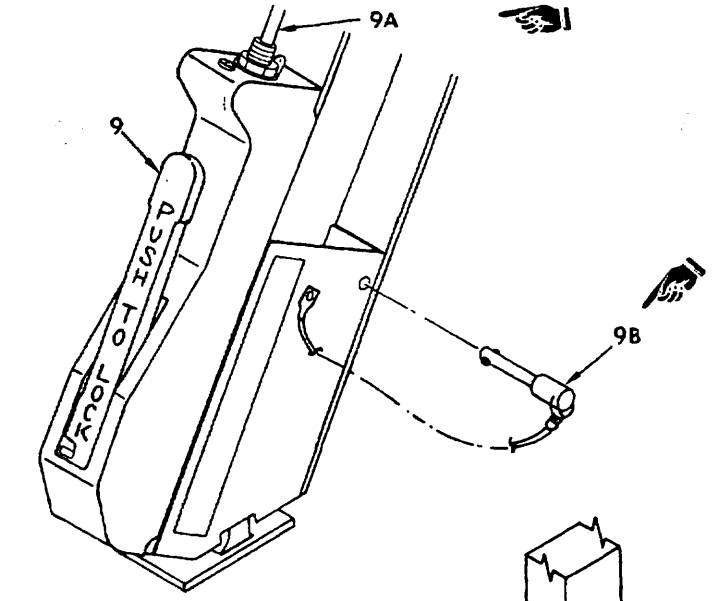

C

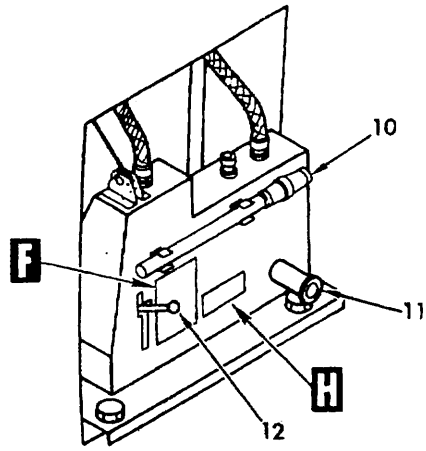

D

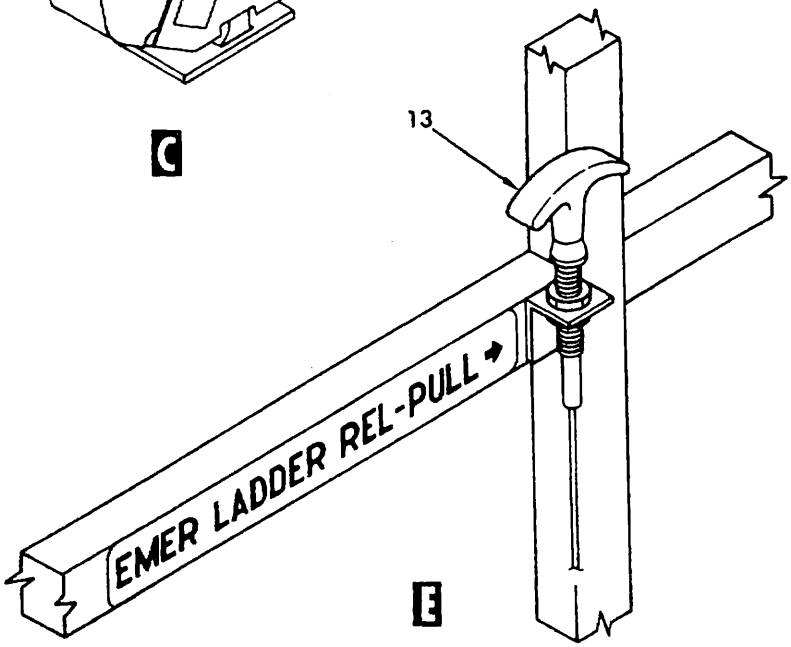

E

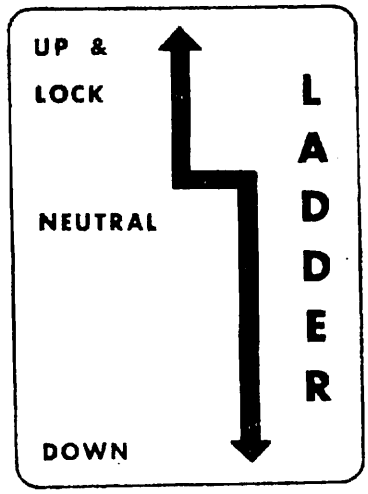

F

WARNING WHEN THE AFT TROOP LADDER IS IN THE DOWN POSITION RETRACT EXTENDABLE FEET BEFORE RAISING RAMP.

G (1)

WARNING PRIOR TO LOWERING LADDER RAISE LADDER FROM ITS UP (STOWED) POSITION BY MEANS OF HYDRAULIC POWER; SYSTEM OR HAND PUMP.

H (1)

NOTE

(1) ON 00445 AND UP AND AIRPLANES MODIFIED BY T.O. 1234.

(2) INOPERATIVE ON AIRPLANES MODIFIED BY T.O. 1640.

(3) REMOVED ON AIRPLANES MODIFIED BY T.O. 1640.

(4) INSTALLED ON AIRPLANES MODIFIED BY T.O. 1640.

9. ADJUSTABLE FOOTLOCK CONTROL HANDLE (2)
9A. ADJUSTABLE FOOTLOCK CONTROL ROD (3)
9B. ADJUSTABLE FOOTLOCKING PIN (4)
10. HANDPUMP HANDLE
11. HANDPUMP SOCKET
12. CONTROL HANDLE
13. EMERGENCY CONTROL HANDLE (LADDER DOWN)

C5A-1-X4/1-176-2

Figure 1-132. (Sheet 2 of 2)

ESCAPE SLIDE RESERVOIR CHARGE PRESSURE

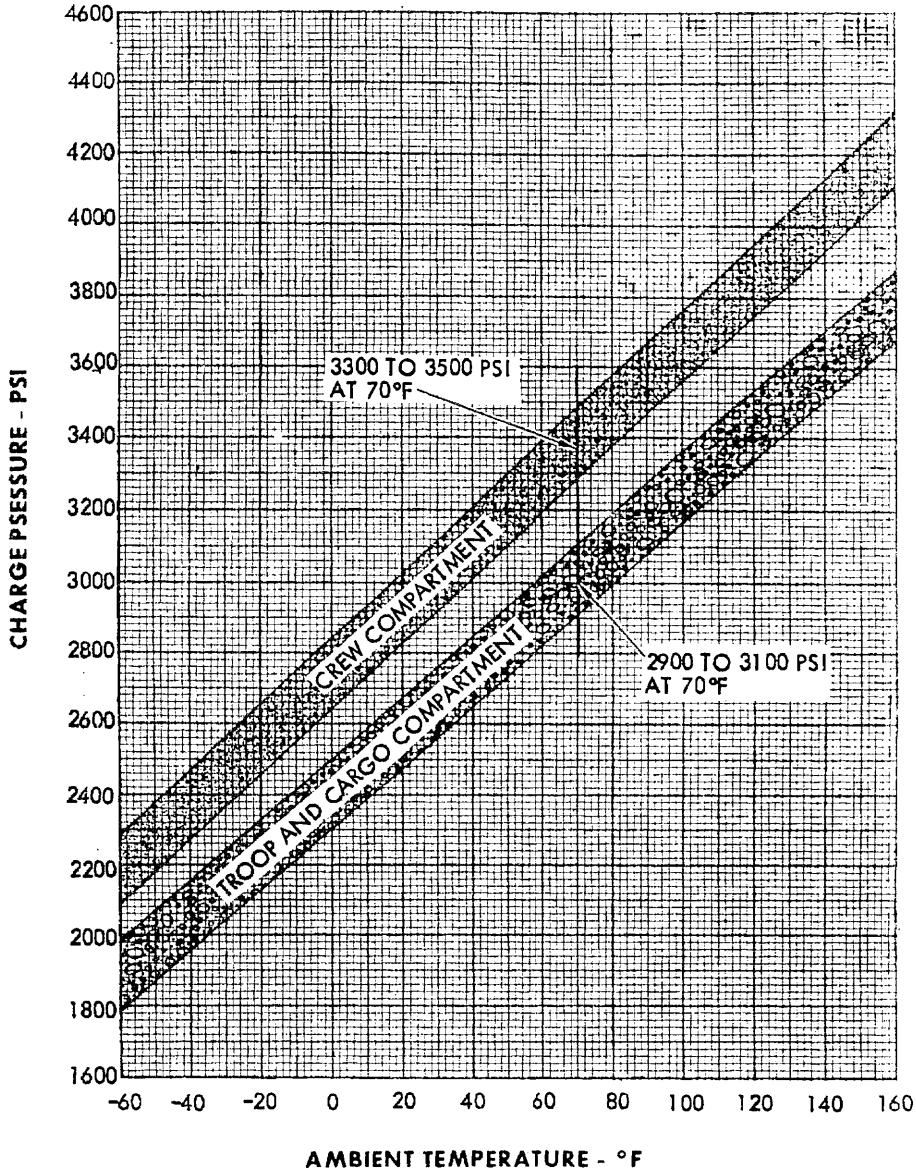

C5A-1-X2/0-193

Figure 1-133.

SECTION II

NORMAL PROCEDURES

Table of Contents

PREPARATION FOR FLIGHT. 2-1

PREFLIGHT CHECKS 2-9

HIGH NOISE AREAS 2-9

BEFORE STARTING ENGINES 2-62

STARTING ENGINES 2-64B

BEFORE TAXI 2-74

TAXI 2-78

BEFORE TAKE-OFF 2-82

LINEUP 2-86

TAKE-OFF 2-87

AFTER TAKE-OFF CLIMB 2-91

CRUISE 2-94

ENROUTE DESCENT 2-94

RAPID DESCENT 2-94

HOLDING 2-95

PENETRATIONS 2-95

DESCENT 2-95

TERRAIN FOLLOWING/TERRAIN AVOIDANCE (TF/TA) 2-101

INSTRUMENT APPROACHES 2-103

BEFORE LANDING/TRAFFIC PATTERN 2-113

LANDING 2-115

GO-AROUND 2-117

AFTER LANDING 2-120

AIR TRANSPORTABLE LOADING DOCK TAXI PROCEDURES 2-122

OPERATIONAL STOP CHECKLIST 2-123

ENGINE SHUTDOWN 2-130

BEFORE LEAVING AIRPLANE 2-132

PREPARATION FOR FLIGHT.

CHECKLISTS AND PROCEDURES REQUIRING COORDINATED ACTIONS.

The flight manual contains only amplified checklists. The abbreviated and scroll checklists have been issued as separate technical orders. The scroll checklists will be utilized at the copilot's and flight engineer's stations and will include normal operating procedures from the BEFORE STARTING ENGINES checklist through the BEFORE LEAVING AIRPLANE checklist. Line items in the amplified, abbreviated, and scroll checklists are identical as pertains to arrangement and item number. The abbreviated checklists are designed for use with binders having plastic envelopes into which the individual pages are inserted. The scroll checklist is designed for use with a flight deck coordinator. The checklist binders and flight deck coordinators are available through normal Air Force supply channels. For the T.O. numbers and dates applicable to those checklists, refer to the status page. Abbreviated and scroll checklists can be obtained through the Air Force Numerical Index and Requirement Table system.

Note

The abbreviated checklist shall be available and used by each crew member for those phases of operation not covered in the scroll checklist.

Items contained in the amplified checklist which are affected by existing conditions at the time the action is performed are followed by the words AS REQUIRED. When a checklist item is followed by a crew member designation, i.e. (P), (CP), (E), etc., that

crew member takes the action and, if the action is in quotes, he reports that action to the person reading the checklist. When a checklist item requires a response by more than one crew member, the crew member will state the response and his crew position. If the crew member is not identified, and if the action is not in quotes, the crew member reading the checklist completes the action and remains silent. During accomplishment of the checklist, AS REQUIRED or STATE SETTING will not be used as a verbal response; instead, the actual position or setting of the unit and/or item will be stated.

Each flight crew member is required to use and refer directly to the appropriate checklist during airplane ground and flight operations except during visual inspection, starting engines, taxi, emergencies, or when specifically allowed by the amplified portion of the checklist. In the latter instances direct reference to checklist items will be made before performing them or afterward, as a cleanup reference. To ensure an adequate visual inspection, checklists include action items required to perform this check. (Exception: Fuel Valves and Pumps Check). These items will be referred to, as necessary, to expedite the inspection and as a clean-up reference after completion of each area of inspection: i.e. Interior Inspection, Nose Area, etc. Initiation of scroll or emergency checklist actions will occur only when the pilot calls for a specific checklist except as indicated in the narrative introduction to that checklist or by amplification of a specific checklist item. The copilot will be responsible for reading the pilot's checklist. Other checklists not included in the above shall be accomplished in accordance with the specific instructions pertaining to that checklist.

To prevent undue complications, this section will include only normal procedures applicable to the pilot, copilot, flight engineer, and scanner. Procedures for other crew members will be included only when their coordination is required. For duties of other crew members, refer to Section IV. The following crew identifying codes are used throughout the checklist.

P - Pilot

CP - Copilot

E - Flight Engineer

N - Navigator

S - Scanner

LM - Loadmaster

A system of crew reporting is used during certain phases of airplane operation to assure that each compartment is ready for that particular phase. Crew members shall report in the following sequence: Navigator, Flight Engineer, Loadmaster, Scanner. Reports shall be made by the crew member occupying that position or compartment. The report assures that checklists are complete and, in the case of the loadmaster and scanner, that applicable compartments are ready for that particular phase of operation. If a checklist is not complete, the crewmember shall respond "IN-PROGRESS." The checklist progress shall stop. When the response indicates that crew position checklist has been completed, the checklist will be resumed. Loadmaster reports shall be made by the loadmaster occupying or responsible for compartments in the following order: troop compartment, cargo compartment, relief crew and courier compartments. In the event a loadmaster is not occupying the aft flight deck compartment, the scanner or flight engineer will be responsible for this report.

Checklist items are presented in a manner which not only eliminates unnecessary words, but also alerts the crew member to expect resultant action. If a system is placed into operation at the time a control is positioned, the checklist item only references the system. For example, Gear-DOWN. When a control is positioned so that a system will be placed in operation when another action is completed, the checklist item references the control. For example, Flight Control Switches - NORMAL.

FLIGHT RESTRICTIONS.

Refer to Section V of this manual for information concerning the restrictions imposed on the airplane.

FLIGHT PLANNING.

Refer to T.O. 1C-5A-1-1 for performance data necessary to complete flight planning for the assigned mission.

TAKE-OFF AND LANDING DATA CARD.

Take-off and landing data cards are contained in the Pilot's Abbreviated Flight Crew Checklist, T.O. 1C-5A-1CL-1 and in the Flight Engineer's Abbreviated Flight Crew Checklist, T.O. 1C-5A-1CL-2. Prior to flight, the flight engineer shall compute a TOLD card based on current conditions. A pilot crew member shall cross-check the TOLD card for accuracy prior to take-off and landing. A sample card which may be reproduced locally as "throw-away" items are shown in figure 2-18. Instructions for completion of the TOLD card work sheet (figure 2-17) are contained in Part 11 of T.O. 1C-5A-1-1.

WEIGHT AND BALANCE.

Check the airplane weight and balance. Refer to the Handbook of Weight and Balance, T.O. 1-1B-40. Before each flight, make certain that the Weight and Balance Clearance (Form 365F) is satisfactory. Refer to Section V of this manual for the weight limitations of the airplane, and check the take-off and anticipated landing gross weight.

KNEELING/UNKNEELING.

The airplane may be kneeled or unkneeled at any time, at the discretion of the pilot, so long as the airplane is stopped. This is to provide the flexibility of kneeling or unkneeling with engine(s) running at idle or shut down. The airplane may also be kneeled/unkneeled by loadmasters without the assistance of the other flight crew members.

ENTRANCE TO AIRPLANE.

Crew entrance to the airplane is gained through the entrance door on the left side of the forward fuselage. (See figure 2-1.)

Door Opening.

To open the crew entrance door and extend the boarding ladder, proceed as follows:

a. Open the crew entrance door controls access cover.

WARNING

Make sure no personnel are standing directly under the crew entry door, and that the area is clear of equipment before attempting to open the door. Failure to comply may result in injury to personnel or damage to equipment.

b. Push the latch release handle (gray) up to pressurize the door system.

Note

When the latch release handle is pushed up, the crew entry door manifold cover inside the cargo compartment will open and the crew door hydraulic system will be energized.

c. Push crew door operate handle (black) down.

CAUTION

The entry ladder will automatically extend to the No. 3 unkneel and aft kneel position when the crew entry door is opened using the external controls. If the airplane is in either the forward or level kneel position, the entry ladder will strike the ground. To prevent this, if the airplane is forward or level kneeled, the crew door operate handle (black) should always be returned to its neutral position immediately after the door starts to open. This will ensure that the ladder will only extend to the No. 1 forward kneel position. If the airplane is forward kneeled, place the ladder position lever to POS 1 FORWARD KNEEL after the door is full open and the ladder is extended. If the airplane is level kneeled, place the ladder position lever to POS 2 LEVEL KNEEL after the door is full open and then push the crew door operate handle (black) down to extend the ladder to the No. 2 position. Failure to comply could result in damage to the ladder.

Note

When the crew door operate handle (black) is pushed down, the door will unlock, open, and hinge down, and the ladder will extend. As the door unlocks, the crew door not lkd light on the LH forward loadmasters lock indicator panel will come on and will stay on until the door is closed and locked.

If the door does not extend, it is possible that the crew door hydraulic system accumulator is depleted. The door can be extended by using the hydraulic hand pump located behind the crew entrance door controls access cover.

Door Closing.

To close crew entrance door once inside the airplane, proceed as follows: (See figure 2-1.)

a. Insure clearance for door operation.

WARNING

Stand clear of door way when the crew door ladder is retracted from any of the three ladder positions. In the event of a failed ladder detent actuator, the door could close causing possible injury to personnel.

b. Position the crew entrance door ladder position lever to POSITION 3.

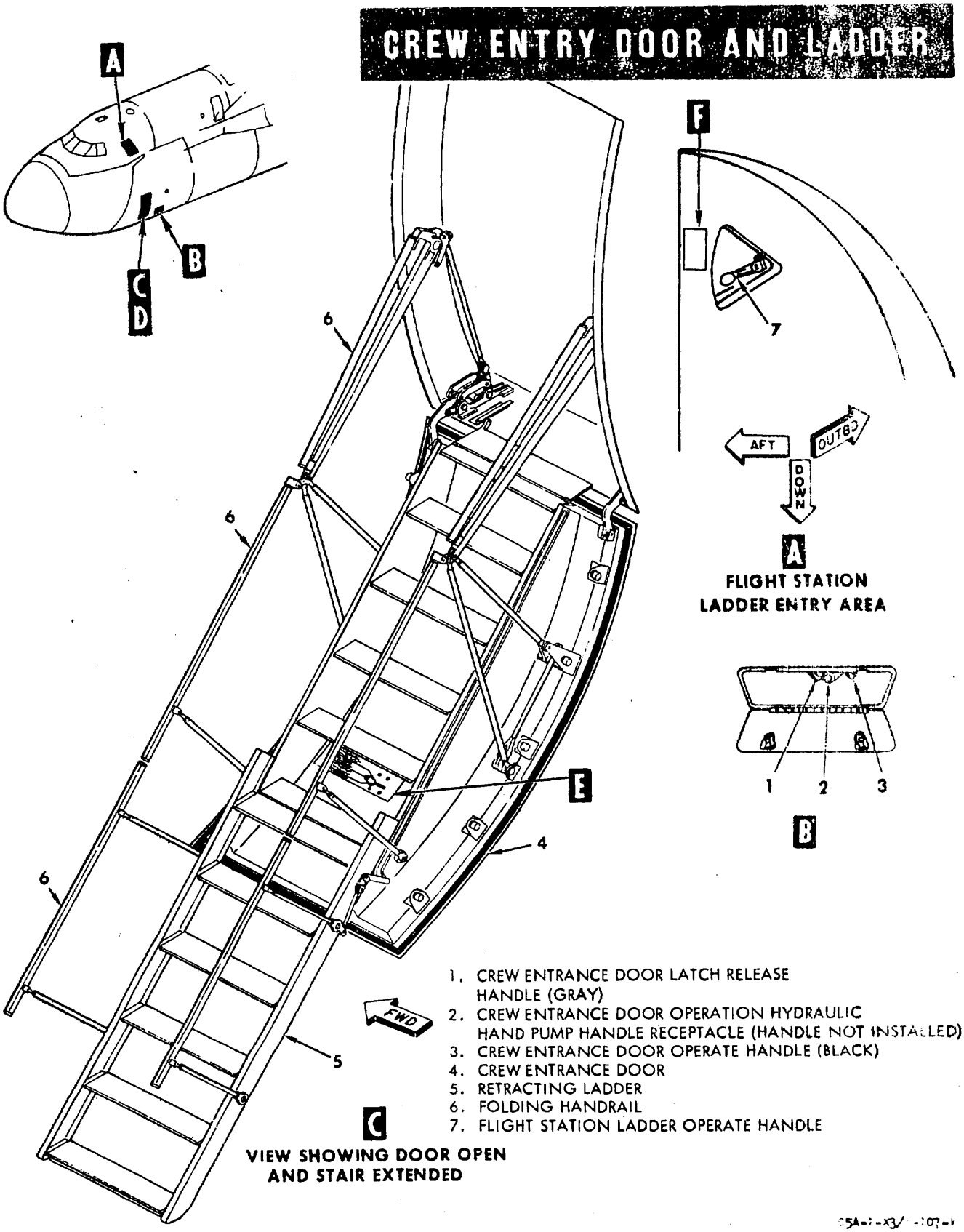

Figure 2-1. (Sheet 1 of 4)

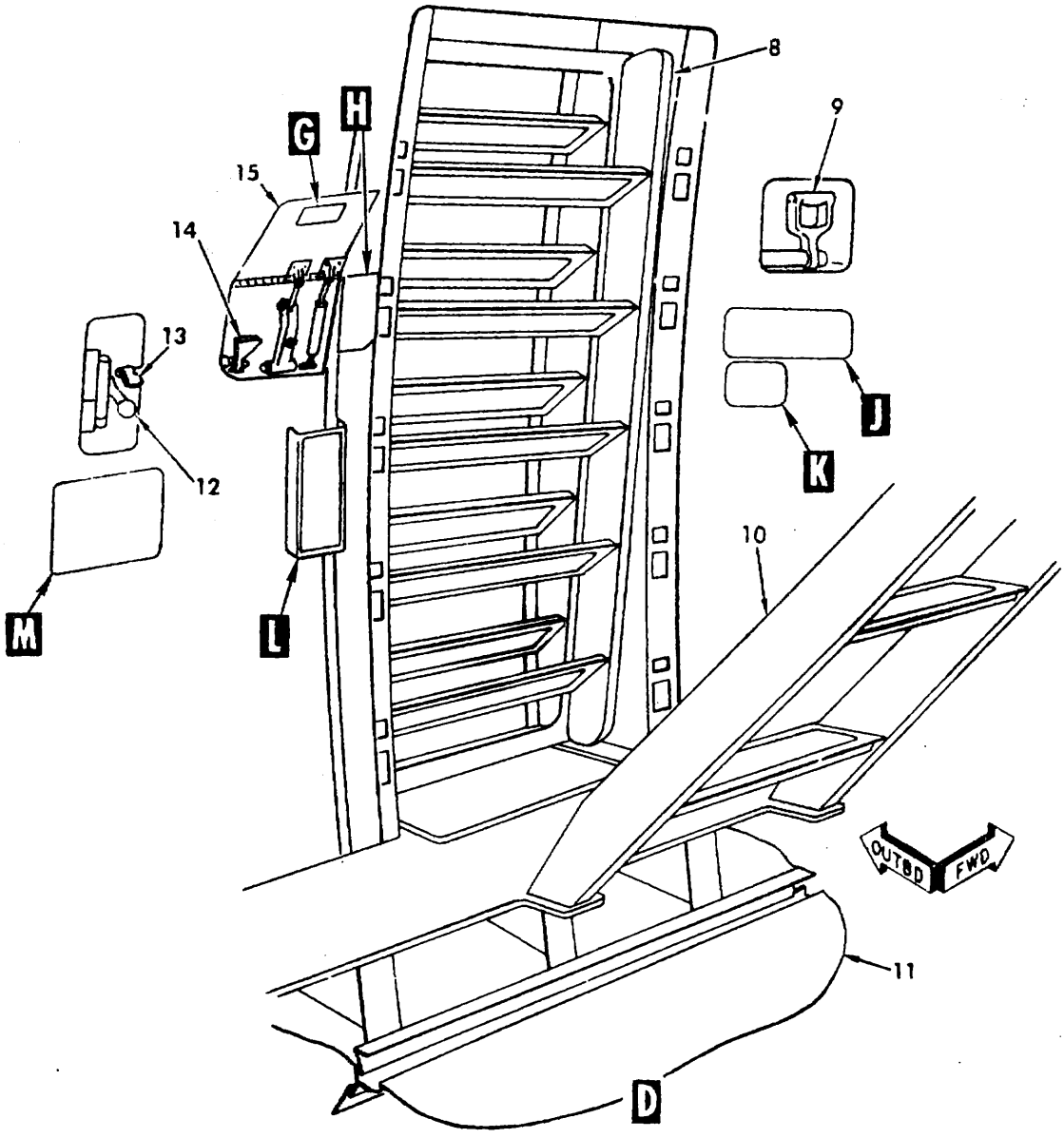

VIEW LOOKING OUTBOARD SHOWING DOOR IN CLOSED POSITION

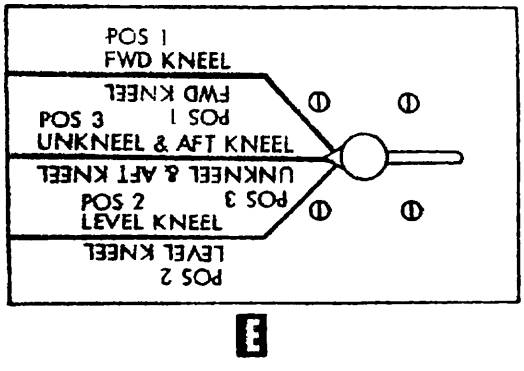

8. CREW ENTRANCE DOOR CLOSED, LADDER RETRACTED
9. CREW ENTRANCE DOOR EMERGENCY EGRESS CONTROL HANDLE.
10. FLIGHT STATION LADDER
11. CARGO FLOOR
12. FLIGHT STATION LADDER LOCK RELEASE HANDLE (BLUE)
13. FLIGHT STATION LADDER OPERATE HANDLE (BLACK)
14. CREW ENTRANCE DOOR CONTROL HANDLE
15. CREW ENTRANCE DOOR CONTROL ACCESS COVER (INSIDE)

C5A-1-X3/4-107-2

Figure 2-1. (Sheet 2 of 4)

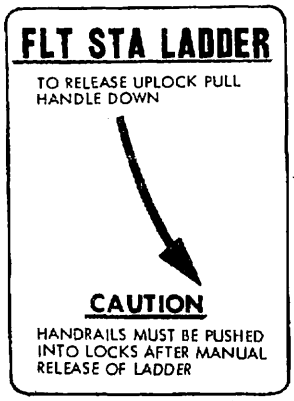

F

G

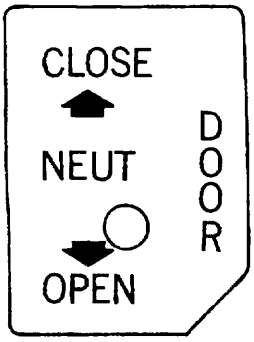

H

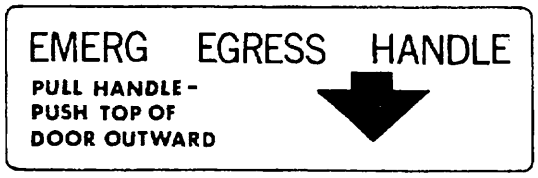

J 1

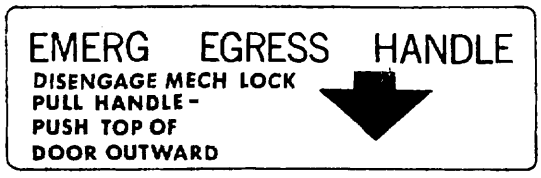

J 2

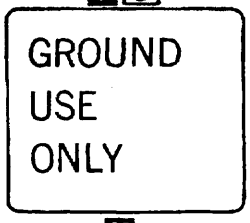

K

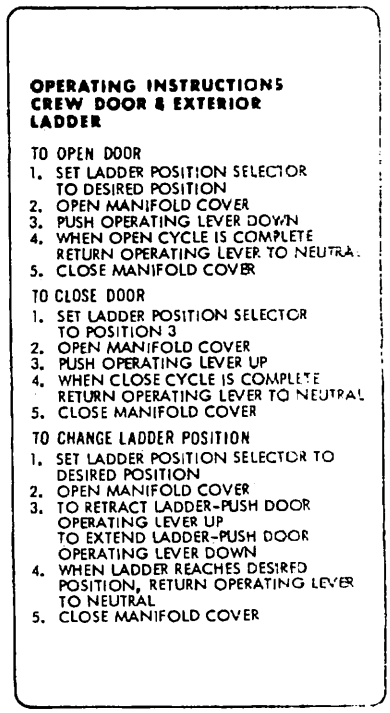

L 1

5A-1-X3/4-107-3

Figure 2-1. (Sheet 3 of 4)

OPERATING INSTRUCTIONS
CREW DOOR & EXTERIOR
LADDER

TO OPEN DOOR

1. DISENGAGE MECH. LOCK
2. SET LADDER POSITION SELECTOR TO DESIRED POSITION
3. OEPN MANIFOLD COVER
4. PUSH OPERATING LEVER DOWN
5. WHEN OPEN CYCLE IS COMPLETE RETURN OPERATING LEVER TO NEUTRAL.
6. CLOSE MANIFOLD COVER

TO CLOSE DOOR

1. SET LADDER POSITION SELECTOR TO POSITION 3
2. OPEN MANIFOLD COVER
3. PUSH OPERATING LEVER UP
4. WHEN CLOSE CYCLE IS COMPLETE RETURN OPERATING LEVER TO NEUTRAL
5. CLOSE MANIFOLD COVER
6. ENGAGE MECH. LOCK

TO CHANGE LADDER POSITION

1. SET LADDER POSITION SELECTOR TO DESIRED POSITION
2. OPEN MANIFOLD COVER
3. TO RETRACT LADDER-PUSH DOOR OPERATING LEVER UP
   TO EXTEND LADDER-PUSH DOOR OPERATING LEVER DOWN
4. WHEN LADDER REACHES DESIRED POSITION RETURN OPERATING LEVER TO NEUTRAL
5. CLOSE MANIFOLD COVER

L ②

OPERATING INSTRUCTIONS

FLT STA LADDER

1. RELEASE LOCK (BLUE HANDLE)
2. OPERATE LADDER (BLACK HANDLE)
3. AFTER LADDER IS LOCKED IN SELECTED POSITION RETURN HANDLES TO NEUTRAL

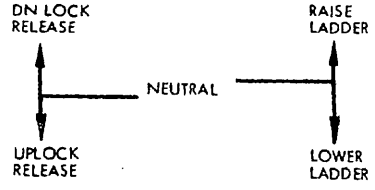

M

NOTE

① ON 68304, 68307, 70167 AND 70170 THROUGH 00448 NOT MODIFIED BY T.O. 1476.

② ON 70168, 00449 AND UP AND AIRPLANES MODIFIED BY T.O. 1476.

C5A-1-X3/4-107-4

Figure 2-1. (Sheet 4 of 4)

WARNING

Do not change ladder position unless the crew door operate handle is in NEUT. To do so could cause the ladder to move and injure the operators hand.

CAUTION

If the crew entrance door ladder position lever is in POSITION 1 or 2, the weight of the ladder must be manually relieved while moving the position lever to POSITION 3.

c. Place the crew entrance door operate handle to close, and hold in this position until the door is up and locked.

d. When the door is up and locked, release the operate handle which will then spring to neutral; then close the manifold cover.

e. Visually check door hooks for over-center position.

Flight Station Ladder Operation.

To stow the flight station ladder from the cargo compartment, proceed as follows:

WARNING

Ensure that the cargo compartment area below the ladder is clear of personnel before attempting to lower the flight station ladder. Failure to comply could result in injury to personnel.

WARNING

Do not manually raise the ladder to its up position. Failure to comply may result in the ladder dropping rapidly when the lock release handle is placed in the UP LOCK RELEASE position and could result in personnel injury.

a. Place the blue lock handle to the DN LOCK RELEASE position.

b. Place the black ladder control handle to the RAISE LADDER position.

c. After the ladder is locked in the up position, return both handles to the NEUTRAL position.

d. To lower the ladder, place the blue lock handle to the UP LOCK RELEASE position.

e. Place the black control handle to the LOWER LADDER position.

f. After the ladder is locked in the down position, return both handles to the NEUTRAL position.

To lower the ladder from the flight station, proceed as follows:

a. Pull release handle down to release ladder uplock.

b. Manually erect and lock folding handrails into the fixed handrails.

c. Check that the ladder is locked in the down position.

PASSENGER LOADING.

Passengers will normally be loaded aboard the airplane prior to commencing the Before Starting Engines checklist. The method of loading passengers is dependent upon the configuration of the airplane at the time of loading.

Normal passenger loading is through the troop doors. However, if the APUs are running, passengers should not board the airplane by this method due to the high noise level created by the APUs. Under this condition, the most convenient method of loading passengers is through the aft cargo doors with the ramp and pressure door in the drive-in position. An alternate method of passenger loading with the APUs running is through the crew entrance door.

If the airplane cargo configuration prevents loading passengers over the aft ramp or through the crew entrance door, an APU should be shut down and passengers loaded through the troop door on that side of the airplane.

PREFLIGHT CHECKS.

Note

The flight crew inspection procedures outlined in this section are predicated on the assumption that maintenance personnel have completed all the requirements for preflight inspection in T.O. 1C-5A-6-2 "Scheduled Inspection and Maintenance Requirements." Therefore, duplicate inspection and operational checks of systems by flight crew members have been eliminated, except for certain items required in the interest of flying safety.

AIRCREW VISUAL INSPECTION.

Check Form 781 to determine the status of the airplane. Check that the airplane has been serviced with the proper amounts and grades of fuel, oil, and oxygen. It is the responsibility of the pilot to determine that the preflight inspection as required by T.O. 1C-5A-6-2, "Scheduled Inspection and Maintenance Requirements," has been performed. It is also the responsibility of the pilot to ensure that each crew member has accomplished his individual inspection requirements.

It is impossible to list all items on the airplane in this inspection. Therefore, only those items affecting safety and safe airplane operation are listed. However, this does not relieve the flight engineer and scanner of the obligation to make a visual inspection of all items on the airplane.

THRU-FLIGHT OPERATIONS.

Thru-flight operations are to be utilized only when the airplane is assigned missions that require intermediate operational stops. During an intermediate stop, it is not necessary to perform all of the preflight checks. Only those items identified by an asterisk and items on which maintenance has been performed are required for thru-flight operations. Items not marked with an asterisk may be checked at the discretion of the flight crew.

HIGH NOISE AREAS.

WARNING

Use an ear protection device when in the cargo or environmental compartments any time equipment in these compartments is operating. Repeated exposure to the noise, without ear protection, could result in hearing impairment.

BEFORE INTERIOR INSPECTION (FLIGHT ENGINEER AND SCANNER).

This portion of the inspection may be conducted with or without electrical power applied. Refer to figure 2-2 for interior inspection walk around route. Emergency exit lights/radio cannot be checked without electrical power applied. The flight engineer/scanner shall perform the navigator/loadmaster duties as appropriate during a minimum flight crew mission when they are not aboard. When a loadmaster is included in the crew, the flight engineer and scanner are not required to accomplish the items marked with a pound sign (#).

CAUTION

Coordination will be required with the navigator and loadmaster before switching power. Failure to coordinate may damage navigation equipment and/or visor.

FLIGHT ENGINEER

*1. Form 781 - CHECKED

*2. Radio - ON/CHECKED

Tuned to tower/ground control frequency.

*3. Emergency Brake Accumulator - DISCHARGED

SCANNER

*1. Form 781 - CHECKED

*2. Chocks - IN PLACE

*3. Exterior Plugs, Covers and Fan Holders - REMOVED

*4. APUs and ATMs - CHECKED

FLIGHT ENGINEER

Select emergency brakes and deplete the hydraulic charge on the accumulator by operating the brakes.

4. Landing Gear Lever - DOWN

5. Flap Handle - AS REQUIRED (position handle same as flap position)

*6. Ground Spoiler Handles - CLOSED

7. Instrument Power Switch - NORM

*8. Ram Air Turbine Switch - RETRACT

*9. Fuel and Start Ignition Switches - STOP

*10. Continuous Ignition Switch - OFF

*11. Flight Control Hydraulic Power Switches - NORM AND AUTO

*12. Inbd Elevator Sys 3 Hydraulic Power Switches - OFF

13. PACS Pitch and Roll Switches - OFF

*14. Heat Switches - OFF

a. Pitot heat switches

b. Angle-of-attack de-ice switches

c. Windshield heat switches

*15. Emergency Exit Lights - ARM

*16. Navigation Lights - FLASH

*17. Flight Station Stairwell Emergency Exit Light - CHECKED/INSTALLED AND CHARGING

*18. Avionics Compartment - CHECKED

a. Equipment Racks - CHECKED

Check equipment for condition, security of mounting and MADAR flight program and data tapes stowed in stowage containers.

b. Circuit Breakers - CLOSED

c. MDR - CHECKED & SET

Check that the pressure rollers are fully engaged and both take-up idler arms are released. Check interlock striker screws on MDR cover for security. If less than 400 feet of tape remains on the supply reel and it is anticipated that the flight will exceed four hours, reload the MDR.

SCANNER

a. Drains, Vents, and Exhaust Ducts - CLEAR

b. APU Oil Quantity - CHECKED

c. APU Fire Extinguisher Bottle Pressure - CHECKED

d. ATM Accumulators - CHECKED

*5. Crew Entrance Door Accumulator - CHECKED

Check the crew entrance door accumulator pre-charge pressure.

*6. RAT Accumulator - CHECKED

Check the RAT accumulator pre-charge pressure.

*7. APU Start Accumulators - CHECKED

Check that the APU start accumulators are charged to a minimum of 2800 PSI (0°F and above).

*8. Emergency Brake Accumulator - CHECKED

Check the emergency brake accumulator pre-charge pressure.

*9. APU Emergency Controls (Loadmasters Forward Control Panel) - SET

a. Fire Handles - IN

b. Bottle Select Switch - NORM

INTERIOR INSPECTION

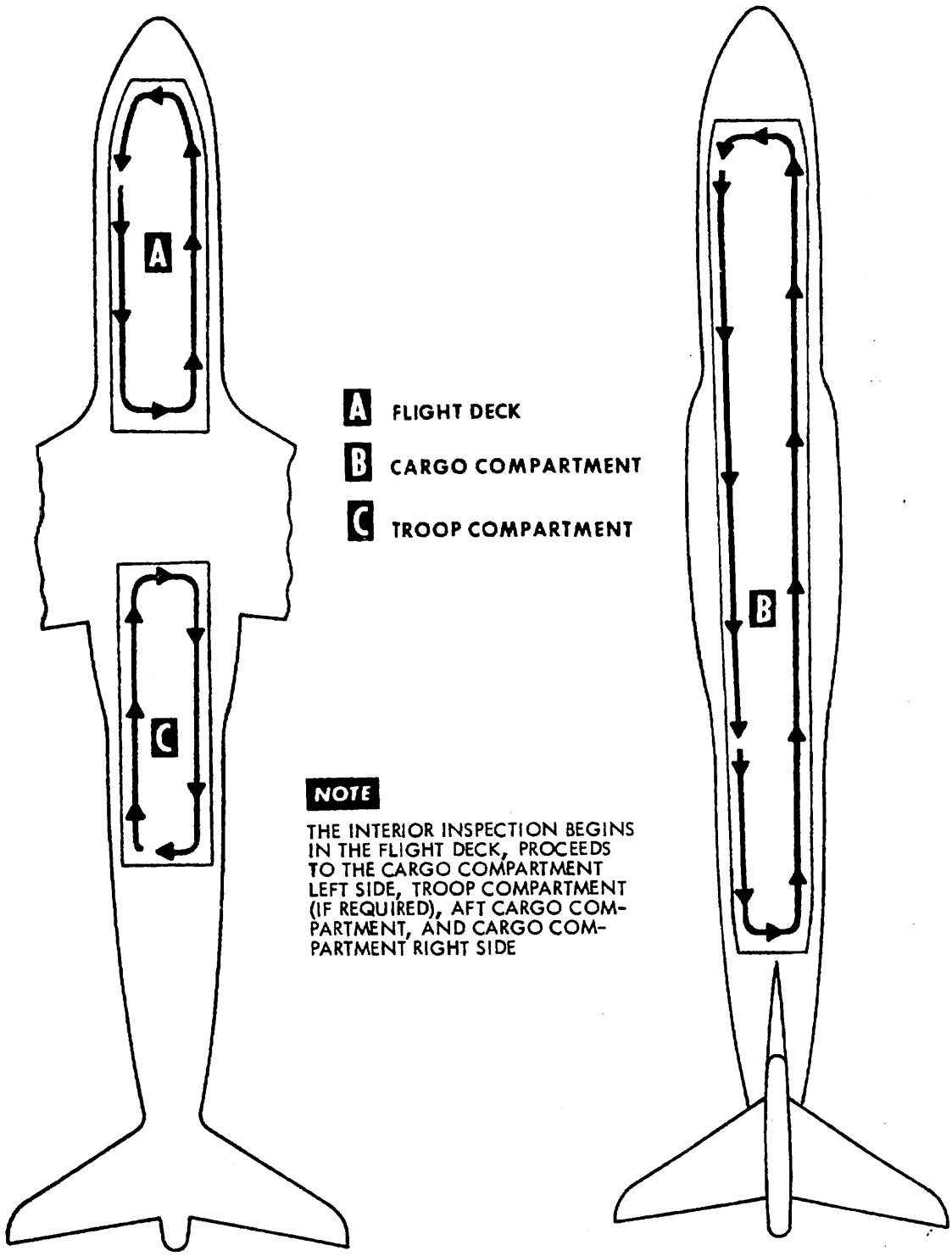

NOTE

THE INTERIOR INSPECTION BEGINS IN THE FLIGHT DECK, PROCEEDS TO THE CARGO COMPARTMENT LEFT SIDE, TROOP COMPARTMENT (IF REQUIRED), AFT CARGO COMPARTMENT, AND CARGO COMPARTMENT RIGHT SIDE

C5A-1-6-145

Figure 2-2.

FLIGHT ENGINEER

SCANNER

d. Signal Conditicner/Multiplexer Switch Circuit Breaker - CN

On 80211 through 00467 modified by T.O. 1365, 1377, and 1378, ensure that the switch-type circuit breaker on the front of the signal conditioner/multiplexer, located in avionics equipment bay 2, is in the ON position.

e. Compartment Doors - CLOSED

*19. Airplane G File - CHECKED

*20. Left Hand Relief Crew Area - CHECKED

a. PA - ON
Volume knob set at 12 o'clock

b. Oxygen Mask Container Tamper Indicators - OUT OF VIEW

c. Relief Crew Circuit Breakers - CHECKED

d. Service Door - CLOSED/LOCKED

e. Escape Slide and Bottle - CHECKED & STOWED

Check bottle pressure, pull cable on girt bar and girt bar stowed and latched.

f. Crash Axe - STOWED

g. Emergency Exit Light - CHECKED/INSTALLED AND CHARGING

h. First Aid Kits - CHECKED

i. Door Warning Light and Override Switch - CHECKED/NORM

j. Fire Extinguisher - CHECKED

k. Escape Reels - SAFETY SEAL CHECKED

l. Emergency Exit Light - CHECKED/INSTALLED AND CHARGING

m. Overhead Emergency Exit - CHECKED SECURE

n. Emergency Exit Ladder - STOWED

o. Life Raft - CHECKED/STOWED

*21. Left Hand Courier Area - CHECKED

a. Floor Hatch - INSTALLED AND LATCHED

b. Life Raft Auto Release Bottle Pressure - CHECKED

c. Oxygen Mask Container Tamper Indicators - OUT OF VIEW

FLIGHT ENGINEER

SCANNER

d. Ground Personnel Restraint Kit - STOWED

e. Fire Extinguisher - CHECKED

f. First Aid Kit - CHECKED

*22. Environmental Compartment - CHECKED

a. Turbine Oil Level - CHECKED

b. Ducts - GENERAL CONDITION

c. Door - CLOSED

*23. Right Hand Courier Area - CHECKED

a. AC Load Center Circuit Breakers - CHECKED/CLOSED

b. Oxygen Mask Container Tamper Indicators - OUT OF VIEW

#*24. Galley - CHECKED

a. All Equipment - STOWED AND SECURE

b. Master Power Switch - AS REQUIRED

c. Circuit Breakers - AS REQUIRED

#*25. Lavatory - CHECKED

a. Portable Oxygen Bottle and Mask - CHECKED

#*26. Right Hand Relief Crew Area - CHECKED

a. Fire Extinguisher - CHECKED

b. Portable Oxygen Bottle and Smoke Mask - CHECKED

c. Oxygen Regulator Panel - CHECKED

(1) Check Oxygen Pressure - 275 to 450 PSI

(2) Test Switch - TEST

(a) Oxygen On Light - ON

(b) Relief Crew Dome Light - ON BRIGHT

(c) No Smoking Light - ON

(d) Warning Horn - SOUNDING

d. Oxygen Mask Container Tamper Indicators - OUT OF VIEW

FLIGHT ENGINEER

SCANNER

e. Student/Instructor Seats - AS REQUIRED

f. Interphone Cord and Control Box - INSTALLED

*27. Bunk Compartment - CHECKED

a. Rear Area - CHECKED/SECURE

Check for proper stowage of spare MDR cassette (loaded), spare reel of MDR tape and spare DRU film cassette (with film).

Note

A spare MDR casette is not required for local flights. A spare reel of MDR tape is required only when planned mission flight time exceeds 48 hours.

b. Oxygen Regulators - 100% AND OFF

c. Portable Oxygen Bottle and Smoke Mask - CHECKED

d. Forward Area - CHECKED/SECURE

e. Oxygen Regulators - 100% AND OFF

f. Restraint Harness (Inflight), Asbestos Gloves and Emergency Radio - CHECKED AND STOWED

*28. Forward Right Side - CHECKED

a. Overhead Escape Hatch - CHECKED FOR SECURITY

b. Escape Reels - SAFETY SEAL CHECKED

c. Emergency Exit Light - CHECKED/INSTALLED AND CHARGING

d. Emergency Exit Ladder - STOWED

e. First Aid Kits, Fire Extinguisher, Portable Oxygen Bottle and Smoke Mask, Crash Axe - INSTALLED/CHECKED

f. Flight Engineer's Circuit Breaker Panels - CHECKED

*29. Battery Voltage - CHECKED

With the Battery switch OFF, check the normal and standby battery voltages. The battery voltages shall not be less than 22.5.

FLIGHT ENGINEER

SCANNER

WARNING

At least one battery must be serviceable and connected to the battery bus to provide power for APU fire extinguishing and isolation. On airplanes modified by T.O. 1387, a serviceable battery must be installed in the normal battery compartment and connected to the airplane to provide power for fire suppression system operation from the nose wheel well panel.

FLIGHT ENGINEER

SCANNER

CAUTION

The Battery switch must not be placed to NORM or STBY unless the respective battery has a charge of at least 22.5 volts. If the battery voltage is less than 22.5 volts and power is applied to the airplane with the Battery switch in NORM or STBY, damage may occur to the battery. If the voltage is less than 22.5, the battery shall be replaced or disconnected if a replacement is not available.

*30. Battery Switch - AS REQUIRED

If both batteries are charged or the standby battery is disconnected, place the Battery switch to NORM. If the normal battery is disconnected, place the Battery switch to STBY.

*31. Electrical Panel - SET

a. Isolated Bus Switch - NORM

b. CSD Disc Switches - NORM

c. Generators - ON

d. Bus Tie Switches - NORM

e. Monitor Bus Switches - NORM

f. APU Generator Selector Switch - AS REQUIRED

g. APU/External Power Switch - AS REQUIRED (Off if external or APU power is not on)

*32. Electrical Power - ON

*10. Electrical power - ON

If external power is available and has not been connected, the scanner shall check unit for normal operation and correct connection to the airplane. The flight engineer shall check the external power light on and place the APU/EXT Pwr switch to EXT PWR and check all bus lights off and bus tie lights off.

INTERIOR INSPECTION (FLIGHT ENGINEER AND SCANNER).

If external power is connected, the engine and APU fire detection system shall be checked. If not, this check shall be made after an APU generator is supplying power to the airplane.

Note

If the airplane is in a kneeled position, the crosswind bite check, the taxi/landing light check and the NLG sequence control panel check will have to be delayed until after the airplane is unkneeled.

FLIGHT ENGINEER

SCANNER

*1. Radio - ON/CHECKED

Tuned to tower/ground control frequency

*2. APU Fire Extinguisher Bottle Select Switch - NORM

*3. APU Fire Handles - IN

*4. Engine and APU Fire Detection System - CHECKED

a. Eng & APU Fire Detect Test Switch - FIRE

Check:

Lights in APU Fire Handles - ON

Eng Fire Lights (Flight Engineer's Annunciator Panel) - ON

Lights in Cargo Compartment APU Fire Handles - ON

Engine Overheat Annunciator Lights (Pilots' Center Instrument Panel) - ON

APU Fire Light (Pilots' Annunciator Panel) - ON

Lights in Engine Fire Handles - ON

Audible Warning - SOUNDS

b. Eng & APU Fire Detect Test Switch - ENG OVHT

Check engine overheat annunciator lights (pilot's center instrument panel) and engine fire lights (flight engineer's annunciator panel) flashing.

c. Short Disc Test Switch - TEST

Hold Short Disc Test switch in TEST during step d.

d. Eng & APU Fire Detect Test Switch - FIRE

Check all lights off

FLIGHT ENGINEER **SCANNER**

The scanner shall be in position to monitor the APUs during start. If external power is not available, APU starting must be coordinated without the use of interphone. The remainder of the electrical power-on check shall be performed using interphone coordination.

If an APU fire occurs during APU start, and intercommunication between the scanner and the flight engineer is not available, the scanner shall immediately notify the flight engineer of the condition. The scanner shall not attempt to fight the fire through the APU compartment push-in-door until the APU start has been terminated. If external power is not available, a fire truck must be standing by during APU starting and single APU operation.

*5. APU Bleed Valves - CLOSE

*6. APU Generator Selector Switch - L APU

*7. APU/EXT PWR Selector Switch - AS REQUIRED

If external power is not connected, place the APU/EXT PWR Selector switch to APU.

*8. Left APU Clear - "CLEAR" (S)

*1. Left APU Clear - "CLEAR" (S)

Scanner will observe APU during APU start

*9. Left APU - START

Check:

Door Open Light - ON

Start Light - ON, THEN OFF

On-speed Light - ON

CAUTION

If the on-speed light does not come on within 30 seconds (0° F and above) or within 60 seconds (-65° F to 0° F) after the APU start light comes on, place the APU Cont switch to STOP. Do not attempt a restart until the malfunction has been corrected.

CAUTION

The flight engineer shall ensure that a crew member is within an area where he can monitor the audible APU fire warning system at all times when the APU is operating.

FLIGHT ENGINEER

SCANNER

CAUTION

If battery power is being used as the power source for starting the APU, the APU fire detection and warning system will be inoperative. The APU fire detectors operate on power from the 28-volt isolated DC bus (figure 1-64).

Note

If the APU is started with battery power, the EGT indicator is inoperative until AC power is available.

*10. Left APU Generator - CHECKED

Check:

APU Gen Fail Light - OFF

APU Gen Out Light - OFF

Voltage and Frequency - NORMAL

*11. Engine and APU Fire Detection System - CHECKED

If external power was not available prior to APU start, perform steps 4, then 1.

*12. Right APU Clear - "CLEAR" (S)

*2. Right APU Clear - "CLEAR" (S)

Scanner will observe APU during APU start.

*13. Right APU - START

Repeat step 9 to start right APU.

*14. APU Generator Selector Switch - R APU/GENERATOR CHECKED

Check:

APU Gen Fail Light - OFF

APU Gen Out Light - OFF

Voltage and Frequency - NORMAL

*15. APU/EXT PWR Selector Switch - APU

Check right APU powering all buses except monitor - buses, then place Monitor Bus switches to OVRD

Release scanner to perform the cargo/troop compartment interior inspection

FLIGHT ENGINEER

SCANNER

*16. Smoke Detector - CHECKED

a. Rotate Smoke Detector Test Switch to each position.

Check smoke lights come on in each test position.

17. Kneeling Control Panel - SET/CHECKED (HYDRAULIC KNEELING SYSTEM)

a. Kneel Command Switch - OFF

b. Kneel Select Switch - AS REQUIRED

c. Kneeling System Indicators - CHECKED

On 00461 and up and airplanes modified by T.O. 1345, check that the Kneel Command switch is in the OFF position, the Kneel Select switch is in the appropriate kneeling position and that the kneeling system indicators agree with the actual position of the airplane.

*18. MADAR - CHECKED AND SET

a. POU/Spare Paper Supply - CHECKED

b. MADAR Pushbutton - DEPRESSED

c. Film Display Pushbutton - DEPRESSED

d. Keyset Clr Pushbutton - DEPRESSED

e. MADAR System Status Pushbutton - DEPRESSED

Update the MADAR decomp using the instructions contained on DRU film frames. If the DRU is inoperative or the film pack does contain Revision A MADAR start-up procedures, complete step 19.

*19. MADAR Decomp - UPDATE

If the POU is inoperative, steps b and k cannot be accomplished. Verify update messages by monitoring the keyset display windows.

a. Standby Mode - SELECTED (1000001)

b. MDR Header Data - PRINTED AND CHECKED (1000022)

c. Time (Zulu) - 6HHMM00

d. Airplane Serial Number - 11XXXXX

e. Calendar Date - 5DDMM7Y

f. Airframe Hours - 120XXXX

g. Engine Serial Numbers - 13NXXXX

h. Engine Hours - 14NXXXX

i. MADAR I. D. Number - 18XXXXX

FLIGHT ENGINEER

SCANNER

j. MDR Header Data - PRINTED AND CHECKED (1000022)

k. Zero Flight Report (Home Station Only) - 1000011

*20. MADAR - TEST (1000002)

a. Failure Reports - RESOLVED

*21. MADAR - STANDBY (1000001)

*22. Flight Engineer's Caution Lights Test Switch - TEST

Check all word warning lights on engineer's console on

*23. Avionics Cooling Fan Switch - AS REQUIRED

On odd numbered days, select fan No. 1
On even numbered days, select fan No. 2

*24. Oxygen Quantity - CHECKED

a. Oxygen Quantity Test Buttons - DEPRESSED

Check:

Indicators move toward zero.

Quantity low lights come on in each test position.

25. Oil Quantity Indicators - CHECKED

Depress the test pushbutton and check that the indicators move to the approximate 3/16 level.

*26. Environmental Control Panel - SET

Check:

a. Aug Air Switches - NORM

b. Bleed Air Switches - ON

Bleed air valve closed light may remain on until manifold is pressurized.

c. L and R Iso Switches - OPEN

d. Troop Compt Switch - AS REQUIRED

e. Both APU Iso Switches - OPEN

f. Floor Heat Switch - OFF

g. Recirc Fan Switch - OFF

h. Airflow Selector - NORM

i. Temp Control Switches - AUTO

j. Air Cond Master Switch - OFF

k. Flow Control Switches - NORM

l. Temp Control Rheostats - AS REQUIRED

FLIGHT ENGINEER

SCANNER

27. Bleed Air and Overheat System - CHECKED

a. L APU Bleed Valve - OPEN

Check:

L and R Manifold Pressure - NORMAL

Engine Bleed Air Valve Closed Lights - OFF

b. Left Ovht Test Switch - TEST

Note

The bleed air valve closed light may flash on and off when test switch is actuated. This does not indicate improper operation.

Check:

Bleed Duct Hot Light (Pilot's Annunciator Panel) - ON

Left Duct Ovht Light - ON

Left Iso Valve Closed Light - ON

No. 1 and No. 2 Engine Bleed Air Valve Closed Lights - ON

Bleed down of left manifold pressure

Left Duct Ovht Light - OFF

c. Left Ovht Test Switch - RESET

Check:

Left Manifold Pressure - NORMAL

No. 1 and No. 2 Engine Bleed Air Valve Closed Lights - OFF

Left ISO Valve Closed Light - OFF

d. Right Ovht Test Switch - TEST

Left Duct Ovht Light - OFF

Note

The bleed air valve closed light may flash on and off when test switch is actuated. This does not indicate improper operation.

FLIGHT ENGINEER	SCANNER
Check:	
Bleed Duct Hot Light (Pilot's Annunciator Panel) - ON	
Right Duct Ovht Light - ON	
Right Iso Valve Closed Light - ON	
No. 3 and No. 4 Engine Bleed Air Valve Closed Lights - ON	
Bleed down of right manifold pressure	
Right Duct Ovht Light - OFF	
e. Right Ovht Test Switch - RESET	
Check:	
Right Manifold Pressure - NORMAL	
No. 3 and No. 4 Bleed Air Valve Closed Lights - OFF	
Right Iso Valve Closed Light - OFF	
f. Center Ovht Test Switch - TEST	
Check:	
Left and Right APU Iso Valve Open Lights - OFF	
Bleed Duct Hot Light (Pilots Annunciator Panel) - ON	
Center Duct Ovht Light - ON	
Left and Right Iso Valve Closed Lights - ON	
Left and right manifold pressure bleed down	
Center Duct Ovht Light - OFF	
g. Center Ovht Test Switch - RESET	
Check:	
Left and Right Manifold Pressure - NORMAL	
Left and Right Iso Valve Closed Lights - OFF	
Left and Right APU Iso Valve Open Lights - ON	
h. L APU Bleed Valve - CLOSE	
Check that bleed air manifold pressure bleed-down time for a 15 PSI drop is no less than 40 seconds. Pressure at initiation of check must be 30 PSI or above. If bleed-down time is excessive when start pressure is above 30 PSI, recheck to insure bleed-down time from 30 to 15 PSI is no less than 40 seconds.	
i. R APU Bleed Valve - OPEN	
Check Left and Right Manifold Pressure - NORMAL	
j. L APU Bleed Valve - OPEN	

FLIGHT ENGINEER

SCANNER

*28. Pressurization Panel - SET

Check:

a. Emer Depress Switch - NORM

b. Mode Selector Switch - FLIGHT

c. Alt Selector - FLIGHT ALT

29. Pressurization System - CHECKED

a. Check Outflow Valve - OPEN

b. Cabin Rate of at Least 1,000 Ft/Min - SELECTED

c. Flight and Landing Tapes - BELOW FIELD ELEVATION/OUTFLOW VALVE CLOSED

d. Mode Selector Switch - MANUAL

e. Manual Cabin Press Knob - ROTATE TO DEC/OUTFLOW VALVE OPENING

f. Manual Cabin Press Knob - ROTATE TO INC/OUTFLOW VALVE CLOSING

g. Mode Selector Switch - LAND/OUTFLOW VALVE OPEN

h. Flight Altitude Selector - SET TO FLIGHT PLAN ALTITUDE

i. Landing Tape - RESET TO FIELD ELEVATION

j. Cabin Rate - SET

k. Mode Selector Switch - FLIGHT

Note

Perform step 30 if aerial refueling is planned.

30. Aerial Refuel System - CHECKED

a. Refuel Switches - OFF

b. Elec Pwr Switch - REF
Check that the disconnect light comes on.

c. Manual Aerial Refuel Slipway Door Handle - ROTATED COUNTERCLOCKWISE
Check that the refuel door not lkd and ready lights come on.

d. Manual Aerial Refuel Slipway Door Handle - ROTATED CLOCKWISE
Check that the ready light goes off.

e. Sys No. 4 Hydraulic Boost Pump - ON

Check that the Sys No. 4 boost press low light goes out.

FLIGHT ENGINEER

SCANNER

f. Sys 4 ATM - ON
Check that the refuel door not lkd light goes off.

CAUTION

During ATM operation, a qualified operator must be on the flight deck to monitor ATM operation. During start of an ATM, if normal hydraulic pressure is not observed within 15 seconds, shut down the ATM. If, during operation of an ATM, a complete loss of hydraulic pressure is experienced in that system or the ATM pump pressure light goes out, shut down the affected ATM and do not attempt to restart it.

(1) Sys 4 ATM Pump Switch - ON

(2) Sys 4 ATM Start Switch - START

Place and hold the ATM Start switch to START until the ATM pump pressure light and the valve open light come on and hydraulic pressure stabilizes.

g. Aerial Refuel Door Switch - OPEN

Check Refuel Door Not Locked Light - ON

h. Boom Latch Switch - NORM

Check:

Fuel Panel and Overhead Console Ready Light - ON

Overhead Console Disconnect Light - ON

i. A/R Disc Buttons - CHECKED

Depress pilot's then copilot's A/R Disc button.

Check:

Fuel panel and overhead console ready light off while button is depressed and on when released.

Overhead console disconnect light remains on.

j. Boom Latch Switch - EMER

Check Fuel Panel and Overhead Console Ready Lights - OFF

k. Boom Latch Switch - NORM

Check Fuel Panel and Overhead Console Ready Lights - ON

FLIGHT ENGINEER	SCANNER
l. Aerial Refuel Door Switch - CLOSED	
Check Door Not Locked light - OFF	
m. Elec Pwr Switch - RADAR	
Check:	
Fuel Panel and Overhead Console Ready Lights - OFF	
Fuel Panel and Overhead Console Latched Lights - OFF	
Disconnect Light - OFF	
n. Sys 4 ATM - OFF	
o. Sys No. 4 Hydraulic Boost Pump - OFF	
p. Refueling Drain Lines - CHECKED	
(1) Fuel Separation Valves - CLOSED	
(2) Refuel Valve Switches - CLOSED	
(3) No. 3 Aux or Extd Rg Pump - ON	
(4) Right Aerial Refuel Isolation Valve Switch - REF	
The right manifold pressure drops momentarily then returns to the previous manifold pressure.	
(5) Left Aerial Refuel Isolation Valve Switch - REF	
Check the left manifold pressure to ensure that the left hand aerial refuel valve is open	
(6) Left Aerial Refuel Isolation Valve Switch - OFF	
Bleed down the left manifold pressure to assure that the left-hand aerial refuel isolation valve is closed.	
(7) Line Drain Switch - AIR REF	
Check that the right manifold pressure drops approximately 3 PSI.	

Note

The PSI pressure drop occurs between 5 and 10 seconds after the Line Drain switch is placed to AIR REF. This pressure drop indicates that the drain valve has opened and the pump is operating.

FLIGHT ENGINEER

SCANNER

(8) Right Aerial Refuel Isolation Valve Switch - OFF

Check that the right manifold pressure returns to the previous manifold pressure.

(9) Boost Pump and Valve Switches - AS REQUIRED

(10) Aerial Refuel Manifold - DRAIN FOR FOUR MINUTES

(11) Line Drain Switch - OFF

Note

Perform step 31 if step 30 was not accomplished.

*31. Aerial Refuel Panel - SET

a. Elec Pwr Switch - RADAR

b. Aerial Refuel Door Switch - CLOSED

c. Boom Latch Switch - NORM

d. Refuel Switches - OFF

Check:

Fuel Panel and Overhead Console Ready Lights - OFF

Fuel Panel and Overhead Console Latched Lights - OFF

Disconnect Light - OFF

Refuel Door Not Locked Light - OFF

*32. Fuel Panel - SET

a. Heaters - OFF

b. Crossfeed Valves - CLOSED

c. Isolation Valves - CLOSED

d. Fill Valves - CLOSED

e. Boost Pumps - OFF

f. Separation Valves - CLOSED

g. Refuel Valves - CLOSED

FLIGHT ENGINEER

SCANNER

h. Jettison Valves - CLOSED

i. Ground Refuel Isolation Switches - OFF

j. Line Drains Switch - OFF

WARNING

The vent box can over-fill and dump fuel on the ground if the Line Drains switch is left in the MANF position.

33. Fuel Quantity Indicators - CHECKED

Note

Do not depress No. 1 and No. 4 Main Tank Indicator Test buttons simultaneously.

Check:

Indicators of tanks with fuel stop at the 50% dot.

Indicators of tanks without fuel stop at the 68% dot.

Total fuel quantity indicator responds to each test and returns to previous reading after test is completed.

Main tank low light on pilots annunciator panel comes on and the No. 1 main tank low or No. 4 main tank low lights come on when the respective fuel quantity indicator reads 75% full or less.

34. No. 1 and No. 4 Main Tank Sump Low Test Switches - TEST 1, THEN TEST 2

Check fuel panel and annunciator panel sump low lights on in both positions.

35. Fuel Temperatures - CHECKED

36. Fuel Valves and Pumps - CHECKED

Boost pump normal blocked line pressure is 25 to 48 PSI. To relieve pressure, open an appropriate refuel valve. Boost pump pressure that immediately drops to zero when boost pump is turned off indicates a leak in the system. A leak in the manifold system is acceptable if there are no external leaks and it can be determined from complete accomplishment of this item that the leak is not in the fuel manifold between the main tank boost pump and the associated engine.

FLIGHT ENGINEER	SCANNER
a. Separation Valves - OPEN	
b. No. 1 Main Outbd Pump - ON	
Check:	
Pump Press Low Light - OFF	
Zero Manifold Pressure	
c. No. 1 Isolation Valve - OPEN	
Check left and right manifold pressure	
d. Center Separation Valve - CLOSED	
Relieve right manifold pressure.	
Check center separation valve closed by zero pressure on right manifold.	
e. No. 1 Main Outbd Pump - OFF	
Relieve left manifold pressure.	
f. No. 1 Main Inbd Pump - ON	
Check left manifold pressure	
g. Left Crossfeed Valve - OPEN	
Check No. 2 pump press low light off.	
h. No. 1 Main Inbd Pump - OFF	
Relieve left manifold pressure.	
i. No. 1 Isolation Valve - CLOSED	
j. Left Crossfeed Valve - CLOSED	
k. No. 2 Main Outbd Pump - ON	
Check:	
No. 2 Pump Press Low Light - OFF	
Left crossfeed valve closed by No. 1 pump press low light on.	
Zero manifold pressure.	
l. No. 2 Isolation Valve - OPEN	
Check manifold pressure	
m. No. 2 Main Outbd Pump - OFF	
Relieve left manifold pressure	

FLIGHT ENGINEER

SCANNER

n. No. 2 Main Inbd Pump - ON

Check manifold pressure.

o. No. 2 Main Inbd Pump - OFF

Relieve manifold pressure.

p. No. 2 Isolation Valve - CLOSED

q. No. 3 Main Inbd Pump - ON

Check:

Pump Press Low Light - OFF

Zero manifold pressure.

r. No. 3 Isolation Valve - OPEN

Check right manifold pressure.

s. No. 3 Main Inbd Pump - OFF

Relieve right manifold pressure.

t. No. 3 Main Outbd Pump - ON

Check right manifold pressure.

u. Right Crossfeed Valve - OPEN

Check No. 4 pump press low light off.

v. No. 3 Main Outbd Pump - OFF

Relieve manifold pressure.

w. No. 3 Isolation Valve - CLOSED

x. Right Crossfeed Valve - CLOSED

y. No. 4 Main Inbd Pump - ON

Check:

No. 4 Pump Press Low Light - OFF

Right crossfeed valve closed by No. 3 pump press low light on.

Zero manifold pressure.

z. No. 4 Isolation Valve - OPEN

Check right manifold pressure.

aa. No. 4 Main Inbd Pump - OFF

Relieve right manifold pressure.

FLIGHT ENGINEER

SCANNER

ab. No. 4 Main Outbd Pump - ON

Check right manifold pressure.

ac. No. 4 Main Outbd Pump - OFF

Relieve right manifold pressure.

ad. No. 4 Isolation Valve - CLOSED

ae. No. 4 Aux Outbd Pump - ON, THEN OFF

Check No. 3 and No. 4 isolation valve closed by No. 3 and No. 4 pump press low lights on.

Check right manifold pressure then relieve.

af. No. 4 Aux Inbd Pump - ON, THEN OFF.

Check right manifold pressure then relieve.

ag. No. 4 Ext Rg Outbd Pump - ON, THEN OFF

Check right manifold pressure, then relieve.

ah. No. 4 Ext Rg Inbd Pump - ON

Check right manifold pressure.

ai. Right Separation Valve - CLOSED

Relieve right manifold pressure inboard of right separation valve. Check zero manifold pressure.

aj. No. 4 Ext Rg Inbd Pump - OFF

Relieve pressure outboard of right separation valve.

ak. No. 3 Aux Outbd Pump - ON, THEN OFF

Check right manifold pressure, then relieve.

al. No. 3 Aux Inbd Pump - ON, THEN OFF

Check right manifold pressure, then relieve.

am. No. 3 Ext Rg Outbd Pump - ON, THEN OFF

Check right manifold pressure, then relieve.

an. No. 3 Ext Rg Inbd Pump - ON, THEN OFF

Check right manifold pressure, then relieve.

FLIGHT ENGINEER

SCANNER

ao. No. 1 Aux Outbd Pump - ON, THEN OFF

Check No. 1 and No. 2 isolation valves closed by No. 1 and No. 2 pump press low lights on. Check left manifold pressure and relieve.

ap. No. 1 Aux Inbd Pump - ON, THEN OFF

Check left manifold pressure, then relieve.

aq. No. 1 Ext Rg Outbd Pump - ON, THEN OFF

Check left manifold pressure, then relieve.

ar. No. 1 Ext Rg Inbd Pump - ON

Check left manifold pressure.

as. Left Separation Valve - CLOSED

Relieve left manifold pressure inboard of left separation valve. Check zero manifold pressure.

at. No. 1 Ext Rg Inbd Pump - OFF

Relieve left manifold pressure outboard of left separation valve.

au. No. 2 Aux Outbd Pump - ON, THEN OFF

Check left manifold pressure, then relieve.

av. No. 2 Aux Inbd Pump - ON, THEN OFF

Check left manifold pressure, then relieve.

aw. No. 2 Ext Rg Outbd Pump - ON, THEN OFF

Check left manifold pressure, then relieve.

ax. No. 2 Ext Rg Inbd Pump - ON, THEN OFF

Check left manifold pressure, then relieve.

37. All Main Tank Outboard Boost Pumps - ON

Pumps on to scavenge vent sumps and for leak check during exterior inspection.

*38. Hydraulic Panel - SET

a. Hydraulic Quantity - CHECKED

b. PTUs - OFF

*39. Flight Control Power Off Lights - ON

*40. Sys No. 1 and No. 4 Hydraulic Boost Pumps - ON

Check that the Sys No. 1 and No. 4 boost press low lights go out.

FLIGHT ENGINEER

SCANNER

*41. ATMs - ON

CAUTION

During ATM operation, a qualified operator must be on the flight deck to monitor ATM operation. During start of an ATM, if normal hydraulic pressure is not observed within 15 seconds, shut down the ATM. If, during operation of an ATM, a complete loss of hydraulic pressure is experienced in that system or the ATM pump pressure light goes out, shut down the affected ATM and do not attempt to restart it.

Note

Do not turn on the floor heat system during operation of the ATMs. Insufficient bleed air pressure can cause one or both ATMs to stall out if simultaneous operation of both systems is attempted.

a. ATM Pump Switches - ON

b. ATM Start Switches - START

Place and hold the ATM start switches to START until the ATM pump pressure light and the valve open light come on and hydraulic pressure stabilizes.

Check:

ATM Pump Press Lights - ON

Systems 1 and 4 Pressure - 3000 (±150) PSI.

*42. Sys No. 1 and No. 4 Hydraulic Boost Pumps - CHECKED

Turn Sys No. 1 and No. 4 hydraulic boost pumps off and observe that the Sys No. 1 and No. 4 boost press low lights remain off. This indicates normal operation of the hydraulic-driven boost pumps. Turn on Sys No. 1 and No. 4 hydraulic boost pumps.

*43. System 1-2 PTU - ON

Check that hydraulic system 2 is pressurized.

44. System 3-4 PTU - ON

Check that hydraulic system 3 is pressurized.

CAUTION

See 15-89

Assure that the Inbd Elevator Sys 3 hydraulic power switches remain in the OFF position during normal ground and inflight operations. Inboard elevator operation with both systems 2 and 3 could damage the elevator interconnect components.

FLIGHT ENGINEER

SCANNER

45. System 2-3 PTU - ON

46. System 1-2 PTU - OFF

Check hydraulic system 2 pressure at 2100 PSI minimum. Check hydraulic system 3 pressure at 2500 PSI minimum, steady.

Note

If system 2 pressure is below 2100 PSI or if system 3 pressure fluctuates or is below 2500 PSI, turn off both Upper and Lower Rudder Systems 2 and 3 switches and recheck the pressure readings.

47. System 1-2 PTU - ON

48. System 3-4 PTU - OFF

Check hydraulic system 3 pressure at 2100 PSI minimum. Check hydraulic system 2 pressure at 2500 PSI minimum, steady.

Note

If system 3 pressure is below 2100 PSI or if system 2 pressure fluctuates or is below 2500 PSI, turn off both Upper and Lower Rudder Systems 2 and 3 switches and recheck the pressure readings.

49. System 2-3 PTU - OFF

50. System 3-4 PTU - ON

51. Emergency Generator Switch - TEST

Check operation of emergency generator.

*51A. Fire Suppression Panels - CHECKED (FSS INSTALLED)

On airplanes modified by T.O. 1387, accomplish the following:

a. Arming Switch - ARM/PANEL SAFE

Check that the armed light comes on and goes off.

CAUTION

If the armed light is on, do not depress any zone switches, or inadvertent discharge could occur.

FLIGHT ENGINEER

SCANNER

b. Left and Right Wing Vent Switch On Lights - OFF

CAUTION

If a light is on, nitrogen usage will be at a very high rate.

c. Cargo Volume Selector Switch - UNDER 10,000 CU FT

d. Nitrogen Fire Suppression Test Switch - TEST/CHECKED/RELEASED

Place and hold the test switch to TEST. The 12 zone alarm lights, the master valves test light on the nitrogen fire suppression panel and the three zone alarm lights on the FE1301 fire suppression panel should come on. All lights should go off when the Test switch is released.

e. Left Wing Vent Switch On Switch - DEPRESSED/ON/OFF

Check that the left wing vent switch on light comes on and then goes off.

f. Right Wing Vent Switch On Switch - DEPRESSED/ON/OFF

Check that the right wing vent switch on light comes on and then goes off.

g. Horn Test/Horn Silence Switch - HORN TEST/HORN SILENCE

Check that the (forward cargo and troop/courier compartment) bailout horns sound and are then silenced.

*52. Circuit Breakers and Instrument Ground Switches - AS REQUIRED

Check: Pilots' Overhead Panel, Emergency, and Navigator's Circuit Breaker panels.

*53. Pilots' Caution Lights Test Switch - TEST.

Check all annunciator lights flash and all word warning lights on console come on steady.

54. Crosswind Positioning System Test - COMPLETED

Note

The flight engineer will confirm that the scanner is in position and ready for the crosswind positioning system check.

To initiate the BITE for the functional self-test of the crosswind positioning system, accomplish the following:

a. X-Wind Reset Switch - RESET

b. Crosswind Positioning Knob - ROTATED/ZERO

FLIGHT ENGINEER

SCANNER

Rotate the Crosswind Positioning knob two to three degrees left or right and observe that all MLG position indicators move. Return the knob to the center (0-degree) position and verify that the wheel indications return to zero. If any main landing gear does not return to center, the X-wind Shutoff-Valve Cont circuit breaker must be opened. The MLG Bogie Emergency Positioning switches may be used to attempt to center the gear.

The aft main gear can be castered by the alternate caster procedure contained in the taxi checklist.

Note

If a main landing gear is more than 4 de-degrees from center, do not taxi the airplane.

c. MLG Caster Control Switch - MLG CASTER

The left and right MLG free caster lights shall come on.

d. Crosswind System BITE Switch - ON

When the BITE switch is placed to ON, the two BITE indicators will display hold and the crosswind inoperative annunciator light above the crosswind control panel will come on. After approximately two seconds, the MLG free caster lights will go out. After five to twenty seconds the hold lights go off, the go lights and the MLG free caster lights shall come on, signaling successful test completion.

e. Crosswind System BITE Switch - OFF

The crosswind inoperative light will go off if computer has successfully completed test. When the BITE test is not successful, the crosswind inoperative light will remain on. Make a second BITE test using steps a through e.

Note

When the BITE test is not completed successfully, do not use the cross-wind system.

f. MLG Caster Control Switch - CENTER

MLG free caster lights shall go out.

The flight engineer shall confirm that the scanner has completed the cargo/troop compartment inspection and is ready for the exterior light and control checks.

*55. Reverse Thrust Emergency Retract Switches - NORMAL

FLIGHT ENGINEER

SCANNER

56. Kneel Select Switch - AS REQUIRED
(PNEUMATIC KNEELING SYSTEM)

On 68304, 68307, 70167, 70168 and 70170 thru 00460 not modified by T.O. 1345, check that the Kneel Select switch is in the appropriate kneeling position.

57. Landing Gear Warning Horn and Lights - TEST

Check warning light on and warning horn sounds.

58. Nose Landing Gear Steering Switch - NORM

*59. Engine Fire Controls - SET

Check:

a. Engine Fire Handles - IN

b. Engine Fire Extinguisher Bottle Select Switches - NORMAL

c. Check BTL Out Lights - OFF

60. Brakes and Anti-skid System - CHECKED

a. Brake Switch - ALT

b. Anti-skid Switch - OFF

Check:

Alternate Brake Pressure - CHECKED

Anti-skid Off Light - ON

No Brakes Light - ON

c. Brake Pedals - DEPRESS AND HOLD

Check:

No Brakes Light - OFF

Brakes Light - ON

d. Brake Pedals - RELEASED

e. Brake Switch - NORM

f. Anti-skid Switch - TEST ARM

Check:

Alternate Brake Pressure - 0 PSI

Normal Brake Pressure - CHECKED

FLIGHT ENGINEER	SCANNER
Anti-skid Off Light - OFF	
No Brakes Light - ON	
g. Brake Pedals - DEPRESS AND HOLD	
Check:	
No Brakes Light - OFF	
Brakes Light - ON	
h. Test 1 Button - DEPRESS	
Check:	
Brakes Light - OFF	
No Brakes Light - ON	
Det Failed Light - ON (AFTER 3 SECONDS)	
i. Test 1 Button - RELEASED	
Check:	
Brakes Light - ON	
No Brakes Light - OFF	
Det Failed Light - OFF	
j. Test 2 Button - DEPRESS	
Repeat steps h and i for test 2.	
k. Test 1 and 2 Buttons - DEPRESS	
Check brakes light on, all others off.	
l. Test 1 and 2 Buttons - RELEASED	
Check Brakes Light - ON	
m. Test 3 Button - DEPRESS	
Check Anti-skid Off Light - ON	
n. Test 3 Button - RELEASED	
Anti-skid Off Light - OFF	

FLIGHT ENGINEER	SCANNER
o. Brake Pedals - RELEASED	
Check:	
No Brakes Light - ON	
Brakes Light - OFF	
p. Anti-skid Switch - ON	
Check:	
Anti-skid Off Light - OFF	
No Brakes Light - OFF	
q. Brake Switch - EMER	
Check:	
Emer Hyd Light - ON	
Anti-skid OFF Light - ON	
Emergency Hydraulic Pressure - CHECKED	
r. Anti-skid Switch - OFF	
*61. Parking Brakes - SET	
Place the Brake switch to EMER and set the parking brakes.	
62. Exterior Lights - CHECKED	
Check:	
a. Fuselage Lights - ON, OFF	
b. Leading Edge Lights - ON, OFF	
c. Anti-Collision Lights - LOWER, ALL, OFF	
d. Landing Lights - EXTENDED, ON, RETRACTED, OFF	
e. Taxi Lights - ON, OFF	
	The scanner shall report "CONTROLS CLEAR" before these checks are started. The flight engineer shall inform the scanner of each particular check to be performed prior to actuating the controls. The flight engineer shall observe indications in the flight station and the scanner shall report actual operation of the controls during each check. The scanner shall insure drainage of any water that may have collected in the flight controls.

FLIGHT ENGINEER

SCANNER

WARNING

Inadequate drainage of rain water could result in freezing upon climb to altitude with potential restriction or immobilization of the control.

63. Flaps - Up

Check flaps and slats retracted

CAUTION

During control system ground checks, abrupt rapid movement of the controls to the full travel position or abrupt change in direction could cause structural damage.

64. Pilot's Stallimiter Test 1 - CHECKED

On 00445 and up and airplanes modified by T.O. 1282, check the pilot's stallimiter as follows:

a. Control Wheel - RESTRAIN

Restrain the control wheel prior to actuating the test switch. This action provides control column damping to prevent possible failure of the control wheel switches.

b. Pilot's Stallimiter Switch - NORM

Check that the stallimit off 1 light goes off. If it remains on, place the Pilot's Stallimiter Test switch to TEST 1. If the light does not go off within 10 seconds, do not continue the test.

c. Pilot's Stallimiter Audible Warning Switch - NORM

Check that the stall audio off 1 light goes off.

d. Pilot's Stallimiter Test Switch - TEST 1

Hold the switch in TEST 1 for 10 seconds and observe the following:

The control columns shake and the audible warning tone is heard.

The VSFI angle-of-attack tapes move first to 25 degrees and then to 15 (±2) degrees.

The pilot's stall light will come on.

The stallimit off 1 light shall not have come on during the test.

FLIGHT ENGINEER

SCANNER

e. Pilot's Stallimiter Test Switch - RELEASE

The pilot's stall light will go off.

65. Copilot's Stallimiter Test 1 - CHECKED

Repeat step 64 to check the copilot's stallimiter. The control columns shake at a lower rate than during the pilot's check and the VSFI angle-of-attack tapes will not drive during the copilot's stallimiter check.

66. Rudder Control - CHECKED

Check:

a. All Rudder Lights - OFF

b. Upper and lower rudder movement left and right.

67. Rudder Trim - CHECKED

a. Move Rudder Trim switches one at a time to NOSE LEFT or NOSE RIGHT.

Check no rudder movement.

b. Move Rudder Trim switches together NOSE LEFT, then NOSE RIGHT.

Check: Rudder travel left, then right.

*68. PACS Pitch and Roll Switches - NORM

69. Roll Control - CHECKED

Check All Aileron and Spoiler Lights - OFF

a. Control Wheel - FULL LEFT

Check:

Left Aileron and Flight Spoilers - UP
Flight spoilers 22-26 degrees

Right Aileron and Flight Spoilers - DOWN
Flight spoilers 0 degrees

b. Control Wheel - FULL RIGHT

Check:

Right Aileron and Flight Spoilers - UP
Flight spoilers 22-26 degrees

Left Aileron and Flight Spoilers - DOWN
Flight spoilers 0 degrees

FLIGHT ENGINEER

SCANNER

c. Flaps - LAND

Check:

Flaps and Slats - EXTENDED

Flight Spoilers - EXTENDED
Flight spoilers 3 degrees

d. Control Wheel - FULL LEFT

Check:

Left Aileron and Flight Spoilers - UP
Flight spoilers 60 degrees

Right Aileron and Flight Spoilers - DOWN
Flight spoilers 0 degrees

e. Control Wheel - FULL RIGHT

Check:

Right Aileron and Flight Spoilers - UP
Flight spoilers 60 degrees

Left Aileron and Flight Spoilers - DOWN
Flight spoilers 0 degrees

0. Ground Spoilers - CHECKED

a. Spoilers - OPEN

Check all spoilers extended full open.

b. Ground Spoiler Roll Control - CHECKED

Rotate the control wheel full left and full right. Check that the flight spoilers retract when the aileron goes down.

c. Spoilers - CLOSED
Flight spoilers 3 degrees

1. Aileron Trim Selector Switch - BOTH

2. Aileron Trim - CHECKED

a. Trim Knob Slide Bar - HOT

b. Trim Knob - LOWER LEFT WING, THEN LOWER RIGHT WING

Check no trim change.

c. Trim Knob Slide Bar - GRD

d. Trim Knob - LOWER LEFT WING, THEN LOWER RIGHT WING

Check no trim change.

e. Trim Knob Slide Bar - NEUTRAL

FLIGHT ENGINEER

SCANNER

f. Trim Knob - LOWER LEFT WING

Check left aileron moves up and right aileron moves down.

g. Trim Knob - LOWER RIGHT WING

Check right aileron moves up and left aileron moves down.

73. Aileron Trim - UPRIGGED 6 DEGREES (LDCS NOT INSTALLED)

On 68304, 68307, 70167, 70168, and 70170 thru 00460 not modified by T.O. 1334, if the ailerons are not uprigged 6 degrees accomplish the following:

a. Aileron Trim Selector Switch - RIGHT HAND ONLY

b. Aileron Trim Knob - LOWER RIGHT WING

Hold the Aileron Trim Knob in LOWER RIGHT WING until the ail trim R wing indicator moves 6 degrees down.

c. Aileron Trim Selector Switch - LEFT HAND ONLY

d. Aileron Trim Knob - LOWER LEFT WING

Hold the Aileron Trim Knob in LOWER LEFT WING until the ail trim L wing indicator moves to 6 degrees down.

e. Aileron Trim Selector Switch - BOTH

74. Elevator Control - CHECKED

Check:

a. Inbd Elevator Sys 3 Lights - ON

b. Inbd Elevator Right Sys 2 Hydraulic Power Switch - OFF

c. Outbd and Inbd Elevator Movement - UP AND DOWN

d. Inbd Elevator Left Sys 2 Hydraulic Power Switch - OFF

e. Inbd Elevator Sys 3 Hydraulic Power Switches - NORM

f. Outbd and Inbd Elevator Movement - UP AND DOWN

g. Inbd Elevator Sys 3 Hydraulic Power Switches - OFF

FLIGHT ENGINEER

SCANNER

CAUTION

Assure that the Inbd Elevator Sys 3 hydraulic power switches remain in the OFF position during normal ground and inflight operations. Inboard elevator operation with both systems 2 and 3 could damage the elevator interconnect components.

75. Pitch Trim - CHECKED

Note

Full travel of the stabilizer during trim check is not required.

a. Stab Trim Reset - NORMAL AND ALTR

b. Pilot's Trim Switches - CHECKED

Move switches one at a time to NOSE UP and NOSE DN.

Check no pitch trim movement.

Move switches together to NOSE UP and NOSE DN.

Check stabilizer leading edge moves down and up.

Depress pilot's Trim Disc button.

Check no trim movement from control wheel Pitch Trim switches and Alt Elec Stab Trim switches.

Reset normal and alternate trim.

c. Copilot's Trim Switches - CHECKED

Move switches one at a time to NOSE UP and NOSE DN.

Check no pitch trim movement.

Move switches together to NOSE UP and NOSE DN.

Check stabilizer leading edge moves down and up.

Depress copilots Trim Disc button.

Check no trim movement from control wheel Pitch Trim switches and Altr Elec Stab Trim switches.

Reset normal and alternate pitch trim.

d. Manual Trim - CHECKED

Move pilot's lever full aft without depressing switch.

Check no trim movement.

With pilot's lever full aft, depress switch.

Check indicator movement up and stabilizer leading edge down.

FLIGHT ENGINEER	SCANNER
Move copilot's lever full forward without depressing switch.	
Check no trim movement.	
With copilot's lever full forward, depress switch.	
Check indicator movement down and stabilizer leading edge up.	
e. Alternate Pitch Trim - CHECKED	
Alternate Trim Test Switch - TEST 1	
Move Altr Elec Stab Trim switches to NOSE UP then NOSE DOWN.	
Check no trim movement.	
Alternate Trim Test Switch - TEST 2	
Move Altr Elec Stab Trim switches to NOSE UP then NOSE DOWN.	
Check no trim movement.	
Alternate Trim Test Switch - TEST 3.	
Check no trim movement.	
Move Altr Elec Stab Trim switches, one at a time, to NOSE UP and NOSE DOWN.	
Check no trim movement.	
Move Alternate Trim Test switch to OFF.	
Move Altr Elec Stab Trim switches together to NOSE UP and NOSE DOWN.	
Check trim movement in proper direction.	
f. Position Indicator - CHECKED	
Run stabilizer to zero (0°) degrees, and scanner observe stabilizer in the 0° position. (Stabilizer leading edge fairing aligned with black reference mark).	

76. Flight Augmentation System - TESTED

Note

To prevent autopilot pitch axis operation after the pitch augmentation system has failed its test do not engage the pitch augmentation system.

a. Flight Augmentation System - DISENGAGED

Depress each of the Yaw, Pitch, and Lateral pushbuttons until the off light comes on.

b. Rudder, Aileron and Inboard Elevator Hydraulic Power Switches - OFF

c. Flight Augmentation System - ENGAGED

FLIGHT ENGINEER

SCANNER

Depress the Yaw, Pitch and Lateral pushbuttons. The off light in each pushbutton should go off.

d. Test Pushbutton - DEPRESSED

Depress the Test pushbutton. The test/on lights in the pushbutton should come on. At the end of a successful test, the test/on lights should go off, the off lights in the three augmentation systems should come on, the reset light in the Reset Failure pushbutton should come on and the three augmentation system inop lights on the annunciator panel should come on. The three augmentation system fault lights should remain off. If a failure occurs during the tests, the failure light will come on, the test should be stopped and maintenance should be accomplished.

e. Reset Failure Pushbutton - DEPRESSED

Depress the Reset Failure pushbutton. The reset light should go off.

f. Rudder, Aileron and Inboard Elevator Sys 2 Hydraulic Power Switches - NORM

g. Flight Augmentation System - RE-ENGAGED

h. Yaw Aug Man. Trim Arm Switch - ON

i. Yaw Aug Man. Trim Control - CHECKED

Slowly rotate the trim control to the left and then to the right. Visually check that the rudder moves in the proper direction.

j. Yaw Aug Man. Trim Arm Switch - OFF

k. Slowly rotate the Yaw Aug Man. Trim Knob to NOSE LEFT, then NOSE RIGHT, then rotate to zero (0).

Check: No rudder travel, left or right.

Note

If the yaw and lateral augmentation systems do not successfully test, and maintenance is available, maintenance should be accomplished prior to flight.

Scanner will be released at this time to complete his preflight duties.

FLIGHT ENGINEER

SCANNER

77. Autopilot System - CHECKED

Check that only the master power, Mach hold/ adj, and alt man. legend lights are on.

Note

On airplanes not modified by T.O. 1346, the Pitch and Roll CWS modes are inoperative.

a. AFCS Master Power Pushbutton - DEPRESSED

The on light in the Master Power pushbutton should come on. The ATS, pitch and lateral legend lights should come on.

b. Pitch Pushbutton - DEPRESSED

The pitch on, pitch CWS on vert nav, alt capture, IAS/Mach hold and alt hold lights should come on.

c. Lateral Pushbutton - DEPRESSED

The lateral on, roll CWS on and horiz nav lights should come on.

d. Pilot's A/P Disc Pushbutton - DEPRESSED

All the on lights on the AFCS control panel, except the on light in the Master Power pushbutton, should go off.

Note

If the autopilot does not disconnect, the autopilot should not be operated until the malfunction has been corrected.

e. Autopilot - RE-ENGAGED

f. Copilot's A/P Disc Pushbutton - DEPRESSED

The results should be the same as in step d.

g. Roll and Pitch Force on Control Wheel - APPLIED

Resistance to the applied force should not be felt.

h. Autopilot - RE-ENGAGED

i. Turn Control Knob - ROTATED RIGHT, LEFT, CENTERED

The control wheel should rotate to the right and left and the roll CWS on light should go off. When the Knob is centered, the roll CWS on light should come back on and the control wheel center.

FLIGHT ENGINEER

SCANNER

j. Pilot's HSI Heading Marker - SET TO AIRPLANE MAGNETIC HEADING

k. Hdg Pushbutton (Pilot's Nav Select Panel) - DEPRESSED

l. Horiz Nav Pushbutton - DEPRESSED

The horiz nav on light should come on.

m. Pilot's HSI Heading Marker - LEFT, RIGHT, CENTER

Check that the control wheel rotates left, right and then back to center.

n. Turn Control Knob - ROTATED OUT OF CENTER

The horiz nav on light should go off.

o. Turn Control Knob - CENTERED

p. Autopilot Pitch Wheel - ROTATED NOSE UP/NOSE DOWN

When the pitch wheel is rotated NOSE UP, the control column should move aft and the horizontal trim indicator should move towards NOSE UP. When the pitch wheel is rotated NOSE DOWN, the control column should move forward and the horizontal trim indicator should move towards NOSE DOWN.

q. Pilot's Pitch Trim Disengage Switch - ACTUATED/DISENGAGE CHECKED

Actuate the pilot's pitch trim switches (NOSE UP OR NOSE DOWN). The on light in the pitch pushbutton should go off.

r. Pitch Autopilot - RE-ENGAGED

s. Pitch CWS and Roll CWS Pushbuttons - DEPRESSED

The pitch CWS on and roll CWS on lights should go off.

FLIGHT ENGINEER

SCANNER

t. Yaw Aug, Pitch Aug and Lateral Aug Push-buttons - DEPRESSED

The yaw aug, pitch aug and lateral aug off lights should come on. The yaw aug inop, pitch aug inop, lateral aug inop, A/P pitch off and A/P roll off lights on the pilots' annunciator panel should come on. The yaw aug fault, pitch aug fault and lateral aug fault lights on the pilots' annunciator panel should remain off.

u. Pitch and Lateral Pushbuttons - DEPRESSED

The A/P pitch off and A/P roll off lights on the pilots' annunciator panel should go off.

78. Automatic Throttle System - CHECKED

a. Throttles - CRUISE POSITION

b. Throttle Friction - OFF

c. ATS Pushbutton - DEPRESSED

When the ATS is engaged, the on light in the ATS pushbutton should come on. The IAS Command marker on the pilot's VSFI should drive to, and hold at the fixed index line. The copilot's IAS command marker will indicate the same airspeed as the pilot's VSFI. The Mach command marker indicates EMAC command Mach, the alpha hold light comes on. the pilot light in the Control Transfer pushbutton comes on, and all of the copilot Mach IAS lights go off. The ATS is now in the direct throttle mode.

Note

If the MMR Mode switch is in the SKE position, the speed deviation indicator will be masked by the speed deviation warning flag. The warning flag is removed by rotating the MMR Mode switch to any other position.

d. Pilot's Throttle No. 1 ATS Disengage Push-button - DEPRESSED

The on light in the ATS pushbutton should go off and no excessive forces should be felt when moving the throttles.

FLIGHT ENGINEER

SCANNER

e. ATS - RE-ENGAGED

Repeat step c to re-engage the ATS.

f. Throttle Friction - INCREASE

The ATS should disengage.

g. ATS - RE-ENGAGED

Repeat step c to re-engage the ATS.

h. IAS HOLD/ADJ Pushbutton - DEPRESSED

The on light should come on and the IAS legend in the IAS/MACH pushbutton should come on.

i. IAS Command Marker - SLEW INCREASE

The throttle should advance to the maximum thrust limit.

j IAS Command Marker - SLEW DECREASE

The throttles should retard to the minimum thrust limit.

k. Copilot's Throttle No. 4 ATS Disengage Push-button - DEPRESSED

The ATS should disengage.

l. Auto Throt Pushbutton - DEPRESSED

79. AFCS Master Power Pushbutton - DEPRESSED

The on lights in the Master Power, Pitch, Lateral and ATS pushbuttons should go off. If the lights are not off, depress the Master Power pushbutton and repeat the check.

*80. CDPIR - CHECKED

a. UHF Radio No. 1 Mode Selector Switch - BOTH

b. UHF-1 and CDPIR Monitor Switches - PULLED

Pull the UHF-1 and CDPIR monitor switches on the observer's intercommunication control panel. Plug in headset to monitor the audio signal from the CDPIR.

c. CDPIR Test Xmit Pushbutton - DEPRESSED

Depress the Test Xmit pushbutton. If the airfoil radio beacon is transmitting, a short audible signal will be heard in the headset.

Note

Depressing the Test Xmit pushbutton will cause the emergency transmitter to transmit on the international distress channel (243.0 MHz) as long as the button is depressed. Permission shall be obtained from the cognizant authority prior to the test, and the above step should only be accomplished on the first preflight of the day.

d. Test Battery Switch - CHG

Rotate the Test Battery switch to the CHG position. If the airfoil battery pack is charging, the green battery test light above the switch comes on.

e. Test Battery Switch - VOLTS

Rotate the Test Battery switch to the VOLTS position. If the airfoil battery pack is within proper voltage limits, the green battery test light comes on.

f. BITE Pushbutton - DEPRESSED

Depress the BITE pushbutton on the area microphone amplifier panel. The green light on the panel should come on, and an audible tone should be heard at the observer's station.

*81. CDPIR Audio Playback - CHECKED

CDPIR audio playback shall be monitored at the observer's station for a delayed and clear audio playback from the CDPIR recorder.

a. Observer's Intercom Monitor Switches - PUSHED IN

b. Observer's Intercom Selector Switch - OUT OF INTERCOM POSITION

c. CDPIR Monitor Switch - PULLED OUT

d. Audio Playback - MONITORED

Speak through the pilot, copilot, and flight engineer intercom systems and monitor the audio playback at the observer's station.

e. Area Microphone - CHECKED

Speak in a loud voice from the flight engineer's station area and monitor the audio playback of the area microphone at the observer's station.

FLIGHT ENGINEER

SCANNER

82. Copilot's CADC Test Switch - MON TEST

Check:

Mach and IAS flags appear in copilot's VSFI's.

CADC No. 2 annunciator light comes on.

83. Ground Spoiler Handle Lock - CHECKED

a. Position Fwd Main and Aft Main Wheel Spin Up Detector Test switches simultaneously to LH, then RH.

Check ground spoiler handles remain locked closed in both switch positions.

b. Simultaneously place Fwd Main switch to LH and Aft Main switch to RH, then reverse positions.

Check ground spoiler handles remain unlocked in both switch positions.

*84. Copilot's Side Console - SET

a. Copilot's Oxygen - 100% AND OFF

b. Stallimiter Audible Warning Switch - NORM (SOME AIRPLANES)

On 00445 and up and airplanes modified by T.O. 1282, place the switch to NORM.

c. Jump Signal Switches - OFF

d. Paratroop Air Deflector Switch - SAFE

e. Cargo Doors Switches - AS REQUIRED

f. Escape Reel - SAFETY SEAL CHECKED

g. Aldis Lamp - STOWED

h. Smoke Goggles - STOWED

*85. PTUs - OFF

*86. ATMs - OFF

*87. Sys No. 1 and No. 4 Hydraulic Boost Pumps - OFF

88. Pilot's CADC Test Switch - MON TEST

Check:

Mach and IAS flags appear in pilot's VSFI's.

CADC No. 1 annunciator light comes on.

FLIGHT ENGINEER

SCANNER

*89. Pilot's Side Console - SET

Check:

a. Observer's Oxygen - 100% AND OFF

b. Weather Radar Switch - NORM

c. Stallimiter Audible Warning Switch - NORM (SOME AIRPLANES)

On 00445 and up and airplanes modified by T.O. 1282, place the switch to NORM.

d. Pilot's Oxygen - 100% AND OFF

e. Escape Reel - SAFETY SEAL CHECKED

f. Smoke Goggles - STOWED

*90. Pilot's Overhead Console - SET

a. Lighting Dimming Switches - AS REQUIRED

b. No Smoking and Seat Belt Lights - ON

c. Seat Belt Lights - OFF

d. Pilot's and Copilot's Pitot Heat - ON, THEN OFF

Turn on the pilot's and copilot's Pitot Heat switches. Check that the fault lights do not come on.

e. Angle-of-Attack De-ice - ON, THEN OFF

Turn on the Angle-of-Attack switches. Check that the fault lights do not come on.

f. Bailout Alarm - CHECKED AND OFF

g. Pilot and Copilot Stallimiter Switches - AS REQUIRED

On 00445 and up and airplanes modified by T.O. 1282, place the pilot's and copilot's stallimiter switches to NORM.

h. Exterior, Interior, and Landing Lights Switches - AS REQUIRED

i. Windshield Heat Switches - OFF

j. Windshield Wiper - PARKED

k. Flight Control Power Off Lights - ON

FLIGHT ENGINEER

SCANNER

Note

The flight engineer shall perform steps 91 and 92 only during a minimum flight crew mission when a navigator is not aboard.

91. AHRU's CHECKED

a. Vertical Gyro Erection Switch - NORM

b. Hemisphere Selection Switch - NORTH OR SOUTH AS REQUIRED

c. Latitude Set Indicator - PRESENT LATITUDE SET

d. Mode Switch - CMPS

Check BDHIs for proper heading indications against standby compass.

e. Mode Switch - DG

f. Nav Set Knob - ROTATED

Check for rotation of corresponding BDHI compass card and HSI.

g. Mode Switch - SLAVE

The synchronization indicator needle deflects from center.

h. Mode Switch - SYNC

This action should center the synchronization needle.

i. Mode Switch - SLAVE

Repeat steps a through i for the other AHRU

92. Navigator's Console - SET

a. Navigator's Oxygen - 100% AND OFF

b. Radar Function Switches - OFF

c. EMAC - CHECKED

(1) Altitude Selector Knob - DEPRESSED
(2) Specific Range Adjust Knob - DEPRESSED
(3) Mach Correction Knob - DEPRESSED
(4) Static Temperature Knob - DEPRESSED
(5) EPR Switch - MANUAL
(6) Cargo Weight - INSERTED
(7) Operating Weight - INSERTED

FLIGHT ENGINEER

SCANNER

(8) Total Fuel Weight - INSERTED

(9) Reserve Fuel Weight - INSERTED

d. ADS Panel - CHECKED

(1) Jump Signal Switch - OFF

(2) ADS Switch - SAFE

93. Navigator's Portable Oxygen Bottle and Smoke Mask - CHECKED

94. Navigator's Smoke Goggles - STOWED

95. Flight Engineer's Portable Oxygen Bottle and Smoke Mask - CHECKED

96. Flight Engineer's Smoke Goggles - STOWED

97. Flight Engineer's Oxygen - CHECKED 100% AND OFF

Check mask and regulator operation.

This check may be performed earlier in the preflight if desired.

98. Main Tank Fuel Boost Pumps - OFF

*99. APU Control Switches - AS REQUIRED

If external power is available and the APUs are to be shut down, place the APU/EXT PWR Selector switch to EXT PWR.

CAUTION

Turn the MADAR off before switching electrical power. Electrical power surges may damage MADAR components.

*100. Emergency Brake Pressure - CHECKED

After a minimum of 5 minutes after the ATMs are turned off, check the emergency brake pressure (minimum 2750 PSI) then release the parking brakes.

*101. AF Form 1239 - CHECKED

Cargo Compartment - Left Side.

The remaining portions of the interior inspection may be made by the scanner. See figure 2-2.

*1. Crew Entrance Door - CHECKED

a. Escape Rope - STOWED

b. Emergency Egress Handle - STOWED

c. Portable Emergency Light - CHECKED/ SECURE

d. Door Lock Switches - CHECKED

e. Door Locking Mechanisms - CHECKED Check linkage and hooks.

2. Crew Entrance Door Emergency Exit Light - CHECKED/INSTALLED AND CHARGING

*#3. Door Lock Status Lights - CHECKED

a. Lamp Test - COMPLETED

*#4. Left Hand Fwd Loadmaster's Panel - CHECKED/SWITCHES AS REQUIRED

a. Lamp Test - COMPLETED

Place the Lamp Test switch to TEST. On 68304, 68307, 70167, and 70170 through 00449 not modified by T.O. 1259, check that the armed light comes on. On 70168, 00450 and up and airplanes modified by T.O. 1259, check that the armed, ramp armed, and roller fault lights come on. Release the switch to OFF. On 70168, 00450 and up and airplanes modified by T.O. 1259, place the switch to ROLLER FAULT EXTING to turn off the roller fault light.

b. Cargo Compartment Lights - CHECKED/ AS REQUIRED

c. Fwd Ramp and Door Control Arming Valve - CHECKED

Ensure that the locking device which holds out the arming button on the manual control valve has been installed with the keeper pin in place.

*5. Crew Entrance Door and Flight Station Ladder Controls - AS REQUIRED

*6. Portable Oxygen Bottle, Smoke Mask, and Fire Extinguisher - CHECKED

*7. NLG Fiber Optics - CHECKED

Inspect nose gear fiberscope for security and clear image of nose gear downlock.

#8. Extraction Parachute Manual Release - STOWED

#9. Forward ADS Door Control Switch - OFF/ LIGHTS TESTED

*10. Cargo Compartment Forward Left Side - CHECKED

a. NLG Manifold Valve Safety Guards and Electrical Connectors - INSTALLED

Check that the guard is installed on the NLG Emer Uplock Unlock and Kneel Only valves and the electrical connectors are secure.

#b. PA System Panel - ON/VOLUME KNOB SET AT 12 O'CLOCK

c. Stowage Container - SECURE/MLG DOWNLOCK PINS (4) STOWED

d. VFU and CADC Drain Bottles - CHECKED

Check for moisture. Any bottle 3/4 full or more should be emptied. Maintenance must leak-check the system any time a bottle is removed.

#e. Cryogenic Vent - CHECKED

#f. Ladder - SECURE

g. Floor Heat Intake Grills - CLEAR

11. Emergency Generator General Condition and Circuit Breakers - CHECKED

*12. No. 2 Hydraulic Reservoir - SERVICED

#13. Cryogenic Vent - CHECKED

*14. No. 1 Hydraulic Reservoir - SERVICED

*15. Anti-Skid Test Selector Switch - OFF

*15A. Nitrogen FSS Left and Right Pressure Limiters - NORMAL (FSS INSTALLED)

On airplanes modified by T.O. 1387, check that the nitrogen FSS Left and Right Pressure Limiters are in the NORMAL (Up) position.

*15B. Nitrogen FSS Maintenance By-Pass Valve - CLOSED (FSS INSTALLED)

On airplanes modified by T.O. 1387, check that the nitrogen FSS Maintenance By-Pass Valve is in the CLOSED (5 o'clock) position.

16. FWD Main Landing Gear Hydraulic Manifold and Emergency Hydraulic Manifold Electrical Connectors - CHECKED/SECURE

*17. Cargo Compartment Left Center - CHECKED

a. LH Fwd MLG Inspection Cover - INSTALLED

b. Portable Oxygen Bottle, Smoke Mask, and Fire Extinguisher - CHECKED

c. Oxygen System Shutoff Valve - OPEN/SAFETIED

18. LH MLG Sequence Control Panel - CHECKED

a. The following lights should be on:

4 - Touchdown Rel (Blue)
2 - Ctr (Blue)
1 - Caster Ctr Td (Blue)
2 - Gear Hdl Dn (Green)
2 - Dn Rotate Sol (Green)
2 - Dn Lock (Blue)
4 - Collar Lock (Blue)

b. Blue Lights Only Switch - TEST
All numbered blue lights should come on.

c. Green Lights - PRESS TO TEST
Press to test the unnumbered, unlighted green lights.

d. Nut Driver - STOWED

19. Aft Main Landing Gear Hydraulic Manifold and Emergency Hydraulic Manifold Electrical Connectors - CHECKED/SECURE

*20. LH Aft MLG Inspection Cover - INSTALLED

21. LH APU Handpump Handle - STOWED

*22. Cargo Compartment, Aft Left Side - CHECKED

#a. Cargo Winch Beam - STOWED

#b. Cryogenic Vent - CHECKED

#c. Stowage Container - SECURE

d. Floor Heat Intake Grills - CLEAR

e. Portable Oxygen Bottle, Smoke Mask, and Fire Extinguisher - CHECKED

f. Emergency Escape Rope - CHECKED

g. Emergency Exit Light - CHECKED/INSTALLED AND CHARGING

#h. LH Troop Door - CHECKED

#i. PA Amplifier - ON/VOLUME KNOB SET AT 12 O'CLOCK

#23. Loadmaster's Aft Control Panel - SET

#24. Door Lock Status Lights - CHECKED

#25. Door Lock Lamp Test - COMPLETED

#26. Pressure Door Manual Uplock Release Handle - SECURED

#27. Winch Control Unit - SECURE

*27A. FE1301 Fire Suppression Panel - CHECKED (FSS INSTALLED)

On airplanes modified by T.O. 1387, accomplish the following:

a. Arm/Panel Safe Switch - PANEL SAFE

b. Lamp Test Switch - LAMP TEST/RELEASE

Hold the Lamp Test switch to LAMP TEST, check that the avionics, ctr wing, and cargo optical alarm lights come on. Release the switch. Check that the lights go off.

*#28. Aft Ramp and Door Control Manifolds - CHECKED

Ensure that the locking device, which holds out the arming button on the manual control valve, has been installed with the keeper pin in place.

#29. Stabilizer Strut Ground Support Pad - STOWED

*#30. Troop Compartment Ladder Controls - AS REQUIRED

*#31. Troop Compartment Ladder General Condition - CHECKED

Troop Compartment.

WARNING

Ensure that no baggage or equipment is stowed on the troop compartment floor grate, or in the negative pressure relief valve cage.

#1. Troop Compartment Ladder Emergency Light - CHECKED/INSTALLED AND CHARGING

#2. Troop Compartment Left Side - CHECKED

a. Left Rear Life Raft - INSTALLED/SECURE

b. Troop Service Door - CHECKED

c. Emergency Exit Light - CHECKED/INSTALLED AND CHARGING

d. Left Rear Escape Slide - INSTALLED/SECURE

e. Left Forward Escape Slide - INSTALLED/SECURE

f. Left Forward No. 3L Hatch - CHECKED

g. Emergency Exit Light - CHECKED/INSTALLED AND CHARGING

h. Escape Ropes - CHECKED

i. Oxygen Mask Container Tamper Indicators - OUT OF VIEW

#3. Troop Compartment Right Side - CHECKED

a. Lavatories - CHECKED

Check oxygen mask, portable oxygen bottles, and tamper indicators.

b. First Aid Kits and Fire Extinguishers - CHECKED/SECURE

c. Escape Ropes - CHECKED

d. Right Forward Escape Slide - INSTALLED/SECURE

e. Right Forward No. 3R Hatch - CHECKED

f. Emergency Exit Light - CHECKED/INSTALLED AND CHARGING

g. Right Forward Life Raft - INSTALLED/SECURE

h. Right Aft Escape Slide - INSTALLED/SECURE

i. Right Aft No. 4 Hatch - CHECKED

j. Emergency Exit Light - CHECKED/INSTALLED AND CHARGING

k. Escape Ropes - CHECKED

l. Right Aft Life Raft - INSTALLED/SECURE

m. Oxygen Bottles and Smoke Masks - CHECKED

n. Oxygen Mask Container Tamper Indicators - OUT OF VIEW

#4. Troop Compartment Aft - CHECKED

a. Crash Axe - STOWED

b. Negative Pressure Relief Doors and Cage - CHECKED/SECURE

c. Galley - CHECKED

Stow loose equipment.

d. Fire Extinguisher and First Aid Kits - CHECKED AND SECURE

e. PA Control Panel - ON/VOLUME KNOB SET 12 O'CLOCK

Aft Ramp and Pressure Door Area.

#1. LH Ramp Lock Indicators - CHECKED

Visually inspect the seven mechanical indicators at the aft ramp locks for correct indication - ORANGE BANDS SHOWING.

*2. LH Pressure Safety Valve - FREE OF OBSTRUCTIONS

#3. Pressure Door for General Condition - CHECKED

*4. RH Pressure Safety Valve - FREE OF OBSTRUCTIONS

#5. RH Ramp Lock Indicators - CHECKED

Visually inspect the seven mechanical indicators at the aft ramp locks for correct indications - ORANGE BANDS SHOWING.

#6. Winch Storage Hatch - INSTALLED

Cargo Compartment - Right Side.

*1. Cargo Compartment, Aft Right Side - CHECKED

#a. Stabilizer Strut Ground Support Pad - STOWED

b. Outflow Valve - CLEAR OF OBSTRUCTIONS

#c. Winch Select Switch - OFF

#d. RH Troop Door - CHECKED

e. Emergency Exit Light - CHECKED/INSTALLED AND CHARGING

f. Escape Rope - STOWED

g. Portable Oxygen Bottle, Smoke Mask, and Fire Extinguisher - CHECKED

h. Empennage Service Light Circuit Breakers - CLOSED

#i. Cargo Vent - CHECKED

#j. Stowage Container - SECURED

k. RH APU Handpump Handle - STOWED

2. Aft Main Landing Gear Hydraulic Manifold and Emergency Hydraulic Manifold Electrical Connectors - CHECKED/SECURE

*3. RH Aft MLG Inspection Cover - INSTALLED

*4. Kneeling Arm Safe Switches - SAFE (PNEUMATIC KNEELING SYSTEM)

On 68304, 68307, 70168 and 70170 thru 00460 not modified by T.O. 1345, check that the arm switches are in the SAFE position.

*5. Wheel Well Iso Valve Switch - CLOSED (HYDRAULIC KNEELING SYSTEM)

On 00461 and up and airplanes modified by T.O. 1345, check that the switch is in the CLOSED position.

*6. Pwr Supply & ISO Valve Switch - OFF (PNEUMATIC KNEELING SYSTEM)

On 68304, 68307, 70168 and 70170 through 00460 not modified by T.O. 1345, check that the switch is in the OFF position.

7. RH MLG Sequence Control Panel - CHECKED

a. The following lights should be on:

2 - Ctr (Blue)
1 - Caster Ctr Td (Blue)
2 - Gear Hdl Dn (Green)
2 - Dn Rotate Sol (Green)
2 - Dn Lock (Blue)
4 - Collar Lock (Blue)

b. Blue Lights Only Switch - TEST
All numbered blue lights should come on.

c. Green Lights - PRESS TO TEST
Press to test the unnumbered, unlighted green lights.

d. Nut Driver - STOWED

8. Crosswind Computer BITE Test Switch - OFF

9. MLG Crosswind System Powerback Test - COMPLETED

a. Left and Right AFT DISC Lights - ON

Check that the left and right AFT DISC lights are on before starting the test.

b. Test Select Switch - POSITION L

c. Test Switch A - POSITION 1, RELEASE, POSITION 2, RELEASE

The left AFT DISC light should go off, come on, go off, then come back on. The right AFT DISC light should remain on.

d. Test Switch B - POSITION 1, RELEASE, POSITION 2, RELEASE

The left AFT DISC light should go off, come on, go off, then come back on. The right AFT DISC light should remain on.

e. Test Select Switch - POSITION R

f. Test Switch A - POSITION 1, RELEASE, POSITION 2, RELEASE

The right AFT DISC light should go off, come on, go off, then come back on. The left AFT DISC light should remain on.

g. Test Switch B - POSITION 1, RELEASE, POSITION 2, RELEASE

The right AFT DISC light should go off, come on, go off, then come back on. The left AFT DISC light should remain on.

*10. Portable Oxygen Bottle, Smoke Masks and Fire Extinguisher - CHECKED

11. Fwd Main Landing Gear Hydraulic Manifold and Emergency Hydraulic Manifold Electrical Connectors - CHECKED/SECURE

*12. RH-Fwd MLG Inspection Cover - INSTALLED

*13. Hydraulic System 4 Reservoir - SERVICED

*14. Cargo Compartment, Right Center - CHECKED

#a. Cargo Vent - CHECKED

b. Inflight Kneeling Switches - OFF (PNEUMATIC KNEELING)

On 68304, 68307, 70167, 70168 and 70170 through 00460 not modified by T.O. 1345, check that the Inflight Kneeling switches are OFF.

Note

A switch that is not in the OFF position will prevent the NLG from extending when the landing gear lever is placed to the DN position.

*15. Hydraulic System 3 Reservoir - SERVICED

*16. Cargo Compartment, Forward Right Side - CHECKED

a. EXT PWR and APU Generator Circuit Breakers - CLOSED

#b. Cargo Winch Circuit Breakers - CLOSED

c. Aft Four-Inch Access Hatch - SECURE

#d. Cargo Vent - CHECKED

e. CADC and VFU Static Drain Bottles - CHECKED

#f. Stowage Container - SECURED

#g. Cargo Vent - CHECKED

h. Fwd Four-Inch Access Hatch - SECURE

i. Portable Oxygen Bottle, Smoke Mask and Fire Extinguisher - CHECKED

j. Batteries and Circuit Breakers - CHECKED

*k. Winch Select Switch - OFF

#l. Stowage Container - SECURED

17. NLG Sequence Control Panel - CHECKED

a. The following lights should be on:

1 - Gear Hdl Dn (Green)
1 - Ctr (Blue)
2 - Door Open (Blue)
2 - Dr Lock (Blue)

b. Blue Lights Only Switch - TEST
All numbered blue lights will be on.

c. Green Lights - PRESS TO TEST
Press to test the unnumbered, unlighted green lights.

d. Emer Elect Oride Switches - SAFETIED

e. Nut Driver - STOWED

*18. Fwd Ramp and Visor Area - CHECKED

a. RH Accessible Visor Locks for Damage and Proper Engagement - CHECKED

b. RH Ramp Lock Indicators - CHECKED

Visually inspect the four mechanical indicators at the forward ramp lock for correct indication - ORANGE RING SHOWING.

c. Area Fwd of Ramp Extension - CHECKED
Check for security and general condition and access panel installed.

d. Forward Winch Hatch - SECURED

e. LH Accessible Visor Locks for Damage and Proper Engagement - CHECKED

f. LH Ramp Lock Indicators - CHECKED

Visually inspect the four mechanical indicators at the forward ramp lock for correct indication - ORANGE RING SHOWING.

19. Under Cockpit Floor Area General Condition - CHECKED

EXTERIOR INSPECTION (SCANNER).

Refer to figure 2-3 for Exterior Inspection walk around route.

Note

If the airplane is in a kneeled position, the nose wheel well inspection, crosswind bite check and the taxi/landing light check may have to be delayed until after the airplane is unkneeled.

*1. Nose Wheel Well - CHECKED

a. Nose Gear Doors and Actuating Arms - DAMAGE AND SECURITY

b. NLG Folding Bulkhead - LOCKED

On 00453 and up and airplanes modified by T.O. 1312, check that the NLG folding bulkhead handle is in the LOCK position.

c. Tires - CONDITION

d. Strut - FLUID LEAKS AND PROPER INFLATION

e. Hydraulic Lines - DAMAGE AND LEAKS

f. Nose Gear Steering Accumulator - CHECKED

g. General Condition and Security - CHECKED

*1A. Nose Wheel Well Fire Suppression Panel - CHECKED (FSS INSTALLED)

On airplanes modified by T.O. 1387, accomplish the following:

a. Panel Cover - OPENED

Depress the two-way relief valve and then open the cover.

b. Power/Arm/Panel Safe Switch - PANEL SAFE

c. Lamp Test Switch - LAMP TEST/RELEASE

Check that all panel lights come on, and go off when the switch is released.

d. Panel Cover - CLOSED AND LATCHED

*2. Nose Area - CHECKED

a. Exterior Surface - CONDITION

b. Probes and Vanes - DAMAGE, COVERS REMOVED

c. Access Doors - CLOSED

d. Radome - CONDITION

*3. Forward Fuselage Right Side and Bottom - CHECKED

a. Exterior Surface - CONDITION

b. Access Doors - CLOSED

c. Maintenance Kneel Switches - OFF

*4. Right Wheel Well Pod and Center Fuselage - CHECKED

a. Fwd MLG Bulkhead Access Door - SECURE

b. Fwd MLG Inner Door Pip Pins - PROPERLY INSTALLED

c. Portable Light - SECURE

d. Fwd MLG Tire Deflation Pressures - AS REQUIRED

e. Fwd MLG Downlock Pin and Blocker Plate - REMOVED

f. Fwd MLG Tires and Brakes - CONDITION

g. Fwd MLG Strut - FLUID LEAKS AND PROPER INFLATION

h. Fwd MLG Scissors Disconnect Pin - INSTALLED

i. Kneeling Counter - CHECKED

EXTERIOR INSPECTION

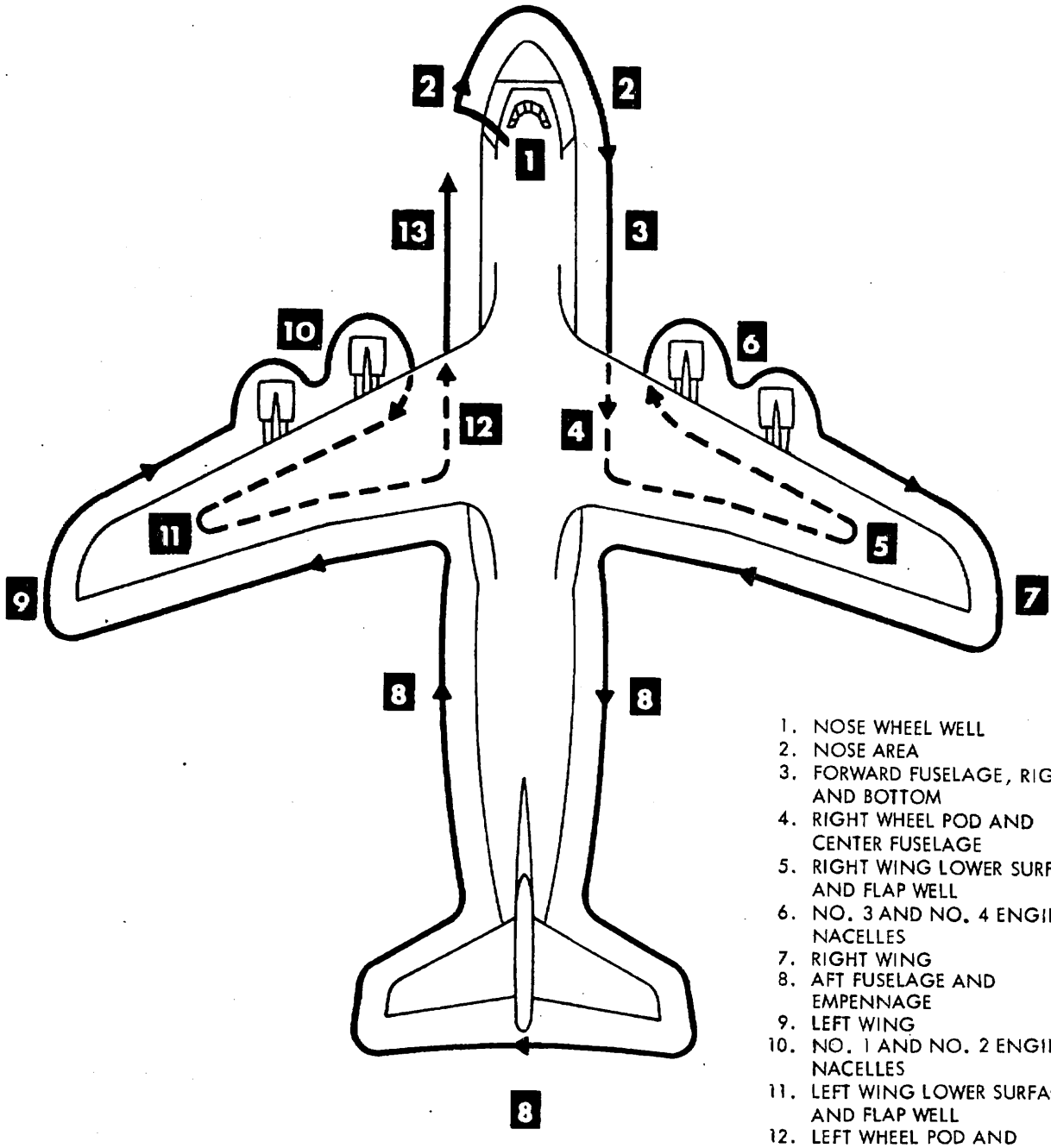

1. NOSE WHEEL WELL
2. NOSE AREA
3. FORWARD FUSELAGE, RIGHT SIDE AND BOTTOM
4. RIGHT WHEEL POD AND CENTER FUSELAGE
5. RIGHT WING LOWER SURFACE AND FLAP WELL
6. NO. 3 AND NO. 4 ENGINE NACELLES
7. RIGHT WING
8. AFT FUSELAGE AND EMPENNAGE
9. LEFT WING
10. NO. 1 AND NO. 2 ENGINE NACELLES
11. LEFT WING LOWER SURFACE AND FLAP WELL
12. LEFT WHEEL POD AND CENTER FUSELAGE
13. FORWARD FUSELAGE LEFT SIDE AND BOTTOM

C5A-1-6-147

Figure 2-3.

On 68304, 68307, 70167, 70168, and 70170 through 00460 not modified by T.O. 1345, the counter shall read between 337-1/2 and 338.

On 00461 and up and airplanes modified by T.O. 1345, the counter shall read zero (±1).

j. High and Low Pressure Pneumatic Compressor - GENERAL CONDITION

k. Fwd MLG Wheel Well - GENERAL CONDITION AND SECURITY

l. Bogie Pitch Positioner Unlock Cylinder - CHECK CONDITION AND PROPER INDICATOR PIN EXTENSION (1/8 inch extended to 1/2 inch in)

m. Bogie Pitch Positioner Pressure - CHECKED

n. Bogie Roll Positioner - CHECK CONDITION AND INDICATOR PIN EXTENSION

If the indicator pin has been tripped, it will extend about 1/4 inch and the red band will be in view.

o. Potable Water Filler Ports and Drain Lines - CHECKED

Visually inspect the potable water fill plug cap and drain line. If water is dripping from these areas, maintenance must be performed to ensure that the water tank valves are properly seated to prevent ice from forming in the landing gear door lock area.

p. Nitrogen Service Panel - CHECKED (FSS INSTALLED)

On airplanes modified by T.O. 1387, accomplish the following:

(1) Panel Cover - OPENED

Depress the two-way relief valve and then open the cover.

(2) Power Switch - ON

(3) Dewar Quantity and Pressure - CHECKED

Select Dewar Selector LEFT, check quantity and pressure. Select Dewar Selector RIGHT, check quantity and pressure.

Note

Dewar quantity should read 750 to 800 pounds per dewar if the system is full. This is the required quantity for two ten-hour flights and 48 hours standby status on the ground. If a mission of this duration is planned and the quantity gage shows less than 750 pounds per dewar, servicing of liquid nitrogen is required. Dewar pressure should read 40 to 50 PSI.

(4) Fuel Tank Pressure - CHECKED/LEFT WING/RIGHT WING

Select LEFT WING and RIGHT WING in turn and read desired pressure of 0.4 to 1.1 PSI both sides.

(5) Secondary Climb Valve Cycled Lights - CHECKED

Check that the secondary climb valve cycled lights are on.

Depress the Reset pushbutton to turn the lights off. The air admitted lights will go off, if on.

CAUTION

If the secondary climb valve cycled lights are not on, the affected wing vent system must be rechecked. The scanner will advise the engineer.

(6) Scrub System Flow Lights - OFF

Depress the Reset pushbutton to turn the scrub system flow lights off, if on.

(7) Lamp Test Switch - LAMP TEST/RELEASED

Hold the Lamp Test switch to LAMP TEST. Check that all servicing panel lights come on. Release the switch and check that all servicing panel lights go off.

(8) Power Switch - OFF

(9) Panel Cover - CLOSED AND LATCHED

q. Aft MLG Bulkhead Access Door - SECURE

r. Aft MLG Inner Door Pip Pins - PROPERLY INSTALLED

s. Aft MLG Tire Deflation Pressures - AS REQUIRED

t. Aft MLG Downlock Pin and Blocker Plate - REMOVED

u. Aft MLG Tires and Brakes - CONDITION

v. Aft MLG Strut - FLUID LEAKS AND PROPER INFLATION

w. Aft MLG Scissors Disconnect Pin - INSTALLED

x. Kneeling Counter - CHECKED

On 68304, 68307, 70167, 70168, and 70170 through 00460 not modified by T.O. 1345, the counter shall read between 337-1/2 and 338.

On 00461 and up and airplanes modified by T.O. 1345, the counter shall read zero (±1).

y. Aft MLG Wheel Well - GENERAL CONDITION AND SECURITY

z. Bogie Pitch Positioner Unlock Cylinder - CHECK CONDITION AND PROPER INDICATOR PIN EXTENSION (1/8 inch extended to 1/2 inch in)

aa. Bogie Pitch Positioner Pressure - CHECKED

ab. Bogie Roll Positioner - CHECK CONDITION AND INDICATOR PIN EXTENSION

If the indicator pin has been tripped, it will extend about 1/4 inch and the red band will be in view.

*5. Right Wing Lower Surface and Flap Well - CHECKED

a. Flaps, Flap Carriages, Jack Screws - CONDITION

b. Spoiler Panels - CONDITION

c. Underwing Area and Flap Well - FUEL, HYDRAULIC LEAKS AND GENERAL CONDITION

*6. No. 3 and No. 4 Engines Nacelles - CHECKED

a. Engine Intakes, Fans, and Exhaust Areas - GENERAL CONDITION

b. Hydraulic Leaks - CHECKED

c. Access Doors - CLOSED

d. Cowl Door Latch Indicator Buttons - FLUSH

*7. Right Wing - CHECKED

a. Slats - GENERAL CONDITION

b. Navigation Lights - CHECKED

c. Aileron, Spoiler Panels and Flap Surfaces - GENERAL CONDITION

*8. Aft Fuselage and Empennage - CHECKED

a. Exterior Surface - LEAKS AND GENERAL CONDITION

b. Stabilizing Strut Doors - CLOSED

c. Ramp and Cargo Doors - GENERAL CONDITION

d. Access Doors - CLOSED

e. Tail Cone Access Cover - SECURE

f. Navigation Lights - CHECKED

*9. Left Wing - CHECKED

a. Aileron Spoiler Panels and Flap Surfaces - GENERAL CONDITION

b. Navigation Lights - CHECKED

c. Slats - GENERAL CONDITION

*10. No. 1 and No. 2 Engine Nacelles - CHECKED

a. Engine Intakes, Fans, and Exhaust Areas - GENERAL CONDITION

b. Hydraulic Leaks - CHECKED

c. Access Doors - CHECKED

d. Cowl Door Latch Indicator Buttons - FLUSH

*11. Left Wing Lower Surface and Flap Well - CHECKED

a. Underwing Area and Flap Well - FUEL, HYDRAULIC LEAKS AND GENERAL CONDITION

b. Spoiler Panels - CONDITION

c. Flaps, Flap Carriages, Jack Screws - CONDITION

*12. Left Wheel Well Pod and Center Fuselage - CHECKED

a. External Air Inlet Cover - INSTALLED

b. Aft MLG Wheel Well Pressure Doors and Bulkhead Doors - SECURE

c. Aft MLG Inner Door Pip Pins - PROPERLY INSTALLED

d. Aft MLG Scissors Disconnect Pin - INSTALLED

e. Kneeling Counter - CHECKED

On 68304, 68307, 70167, 60168, and 70170 through 00460 not modified by T.O. 1345, the counter shall read between 337-1/2 and 338.

On 00461 and up and airplanes modified by T.O. 1345, the counter shall read zero (±1).

f. Aft MLG Strut - FLUID LEAKS AND PROPER INFLATION

g. Aft MLG Tires and Brakes - CONDITION

h. Aft MLG Downlock pin and Blocker Plate - REMOVED

i. Aft MLG Tire Deflation Pressures - AS REQUIRED

j. Aft MLG Wheel Well - GENERAL CONDITION AND SECURITY

k. Bogie Pitch Positioner Unlock Cylinder - CHECK CONDITION AND PROPER INDICATOR PIN EXTENSION (1/8 inch extended to 1/2 inch in)

l. Bogie Pitch Positioner Pressure - CHECKED

m. Bogie Roll Positioner - CHECK CONDITION AND INDICATOR PIN EXTENSION

If the indicator pin has been tripped, it will extend about 1/4 inch and the red band will be in view.

n. Fwd MLG Scissors Disconnect Pin - INSTALLED

o. Kneeling Counter - CHECKED

On 68304, 68307, 70167, 70168, and 70170 through 00460 not modified by T.O. 1345, the counter shall read between 337-1/2 and 338.

On 00461 and up and airplanes modified by T.O.1345, the counter shall read zero (±1).

p. Fwd MLG Strut - FLUID LEAKS AND PROPER INFLATION

q. Fwd MLG Tires and Brakes - CONDITION

r. Fwd MLG Downlock Pin and Blocker Plate - REMOVED

s. Fwd MLG Tire Deflation Pressures - AS REQUIRED

t. Portable Light - SECURE

u. Fwd MLG Bulkhead Access Door - SECURE

v. Fwd MLG Inner Door Pip Pins - PROPERLY INSTALLED

w. Fwd MLG Wheel Well - GENERAL CONDITION AND SECURITY

x. Bogie Pitch Positioner Unlock Cylinder - CHECK CONDITION AND PROPER INDICATOR PIN EXTENSION (1/8 inch extended to 1/2 inch in)

y. Bogie Pitch Positioner Pressure - CHECKED

z. Bogie Roll Positioner - CHECK CONDITION AND INDICATOR PIN EXTENSION

If the indicator pin has been tripped, it will extend about 1/4 inch and the red band will be in view.

aa. Maintenance Kneel Switches - OFF

*13. Forward Fuselage Left Side and Bottom - CHECKED

a. Exterior Surface - CONDITION

b. Access Doors - CLOSED

Note

If the airplane was kneeled at the start of this inspection, the taxi/landing light check and crosswind bite check in coordination with the flight engineer and inspection of the wheel well areas will be accomplished as soon as possible after the airplane is unkneeled.

*14. Crew Entrance Door and RAT Accumulators - CHECKED

The crew entrance door and RAT accumulators must be checked after the ATMs have been turned off for 5 minutes (minimum). The pressure should not drop below 2750 PSI minimum for the crew entrance door accumulator or 2500 PSI minimum for the RAT accumulator.

BEFORE STARTING ENGINES.

This checklist may be accomplished by copilot, navigator, flight engineer, scanner and loadmaster (only if part of crew complement) in advance when directed by pilot, providing the checklist for all positions is accomplished simultaneously and these crew members maintain continuous watch on interphone at respective crew positions after completion of the checklist.

Prior to establishing interphone contact to execute this checklist, the scanner will make a visual inspection of the airplane exterior to assure that the following items are removed/stowed/secured: Ground wires, pitot covers and servicing access doors.

PILOTS

1. Forms 781 & 365 F - "CHECKED AND SIGNED" (P)

2. Oxygen - "CHECKED AND ON" (CP,P)

   This check may be accomplished prior to this checklist.

   WARNING

   All crew members will have an oxygen mask installed at a readily available oxygen source during flight.

3. Radios, Radar Altimeters, and IFF - "ON AND STBY" (CP, P)

FLIGHT ENGINEER

1. Battery Switch - AS REQUIRED

   If both batteries are charged or the standby battery is disconnected, place the Battery switch to NORM. If the normal battery is disconnected, place the Battery switch to STBY.

   Note

   Steps 2 through 9 are not required if APUs are operating and supplying electrical power.

2. APU Bleed Valves - CLOSE

3. APU Generator Selector Switch - L APU

SCANNER

PILOTS	FLIGHT ENGINEER	SCANNER
This item may be accomplished prior to this checklist. Copilot will tune and check one communications radio on tower or ground control frequency.	**Note** If the left APU is inoperative, place the Generator Selector switch to R APU and omit steps 5 and 6.	
4. Flight Augmentation - "OFF" (P)	4. APU/EXT PWR Selector Switch - AS REQUIRED If external power is not connected, place the APU/EXT PWR Selector switch to APU.	
5. Thrust Reverse Limiter - "SET" (CP)	5. Left APU - "CLEAR" (S)	1. Left APU - "CLEAR" (S) If APUs are running, steps 1 and 2 are not required.
6. Throttles - "START" (P)	6. Left APU - START Check that door open light, start light, and on speed light come on.	
7. Brake Switch - "EMER" (CP) Copilot shall check for proper brake pressure.	7. Right APU - "CLEAR" (S)	2. Right APU - "CLEAR" (S)
8. Anti-skid Switch - "OFF" (CP)	8. Right APU - START	
9. Parking Brake - "SET" (P)	9. APU/EXT PWR Selector Switch - APU	
	CAUTION Turn the MADAR off before switching electrical power. Electrical power surges may damage MADAR components.	
	10. Remove External Power - "REMOVING EXTERNAL POWER" (S)	3. Remove External Power - "REMOVING EXTERNAL POWER" (S)
10. Gear Pins, Chocks, and Stabilizer Struts - "REMOVING AND STOWING" (S)	**CAUTION** If operating with a single APU, and external power is available, external power will not be removed until called for in the Starting Engines checklist.	4. Gear Pins, Chocks, and Stabilizer Struts - "REMOVING AND STOWING" (S)
11. Cockpit Windows - "CLOSED AND LOCKED" (CP,P)	11. APU Bleed Valves - OPEN	
12. Navigation and Anti-collision Lights - "STEADY AND ALL" (CP)	12. Floor Heat Switch - OFF	
	13. Sys No. 1 and No. 4 Hydraulic Boost Pumps - ON	
	14. ATMs - AS REQUIRED	

PILOTS	FLIGHT ENGINEER	SCANNER
	Turn on the ATMs only if the brake accumulator needs to be charged, or if brake accumulator pressure cannot be maintained without ATM hydraulic pressure.	
13. Inbd Elevator Sys 3 Hydraulic Power Switches - "OFF" (CP)	Place the ATM pump switch to ON, then hold the ATM Start switch in START until the ATM pump pressure light and valve open light come on and hydraulic pressure stabilizes.	
CAUTION Assure that the Inbd Elevator Sys 3 hydraulic power switches remain in the OFF position during normal ground and inflight operations. Inboard elevator operation with both systems 2 and 3 could damage the interconnect components.	CAUTION During ATM operation, a qualified operator must be on the flight deck to monitor ATM operation. During start of an ATM, if normal hydraulic pressure is not observed within 15 seconds, shut down the ATM. If, during operation of an ATM, a complete loss of hydraulic pressure is experienced in that system or the ATM pump pressure light goes out, shut down the affected ATM and do not attempt to restart it.	
14. Windshield Heat - "NORMAL" (CP)	15. Hydraulic Pumps - SET a. Top Pump Switch - NORM b. Bot Pump Switch - DEPRESS	
	17. Fuel Boost Pumps - ON	
	16. Fuel Panel - AS REQUIRED If standard fuel sequence is used, turn the main tank outboard boost pumps on. If alternate fuel sequencing is used, refer to Alternate Fuel System in Section I.	
	17. Wheel Well Isolation Valve Light - OFF	
	18. Oxygen - ON	
	19. Flight Report - ZEROED (1000011) (HOME STATION ONLY)	
	20. MADAR - OPERATE (1000003)	
	21. Enter CMA Message - AS REQUIRED	

PILOTS	FLIGHT ENGINEER	SCANNER
	Note If take-off gross weight is above 635,850 pounds, enter CMA message 9212001. If take-off gross weight is below 635,850 pounds, enter CMA message 9212002.	
	22. FSS Cargo Volume Selector Switch - AS REQUIRED (FSS INSTALLED) On airplanes modified by T.O. 1387, select the cargo volume, as advised by the loadmaster, with the Cargo Volume Selector switch.	
15. Crew Start Report - "_____ READY" (N,E, LM,S) The loadmaster in each compartment will respond with the total number of personnel and crew members in that compartment. The aft flight deck loadmaster will include all personnel on the flight deck and the scanner in his personnel count (i.e., "Aft flight deck ready, 18 total/8 crew"). This indicates 18 personnel will occupy the flight deck, 8 of which are crew members.	23. Crew Start Report - "ENGINEER READY" (E) Assure checklist is complete. If loadmaster is not on flight deck, assure that relief crew area and courier area are ready. Make aft flight deck report in proper sequence.	5. Crew Start Report - "SCANNER READY" (S)
16. Before Starting Engines Check "COMPLETED" (CP)		

STARTING ENGINES.

Note

Normal engine starting sequence is 1, 2, 3, 4.

Flight without at least one operable APU is prohibited. This is to ensure that bleed air will be available in the event of a four-engine flameout. The generator must be operable on the operating APU and must be capable of carrying the airplane electrical loads to supply power for the Four Main Generator Out procedure and the Four Engine Flameout procedure.

Normal engine starting may be accomplished with one APU inoperative. However, if single APU operation is required, external power (if available) will not be removed until called for in this checklist. If external power is not available, a fire truck will be required to stand by until engine starting has been accomplished. A single APU will provide the necessary electrical power for starting and bleed air for generation of one ATM at a time, and for engine starting. If sufficient air is not available, the ATM may be shut down and nose wheel chocks shall be used.

System 1-2 PTU is turned on after starting engine No. 1. System 2-3 PTU is turned on after starting engine No. 2. System 3-4 PTU is not used during normal starting sequence.

Note

If a hydraulic system cannot be pressurized prior to starting the associated engine, the engine may be started without suction pressure. However, this procedure should be used only when absolutely necessary since repeated engine starts without suction pressure will reduce hydraulic pump life.

Alternate starting procedures and brake switch selection may be used when one ATM/APU operation is required. See figure 2-4 for danger areas.

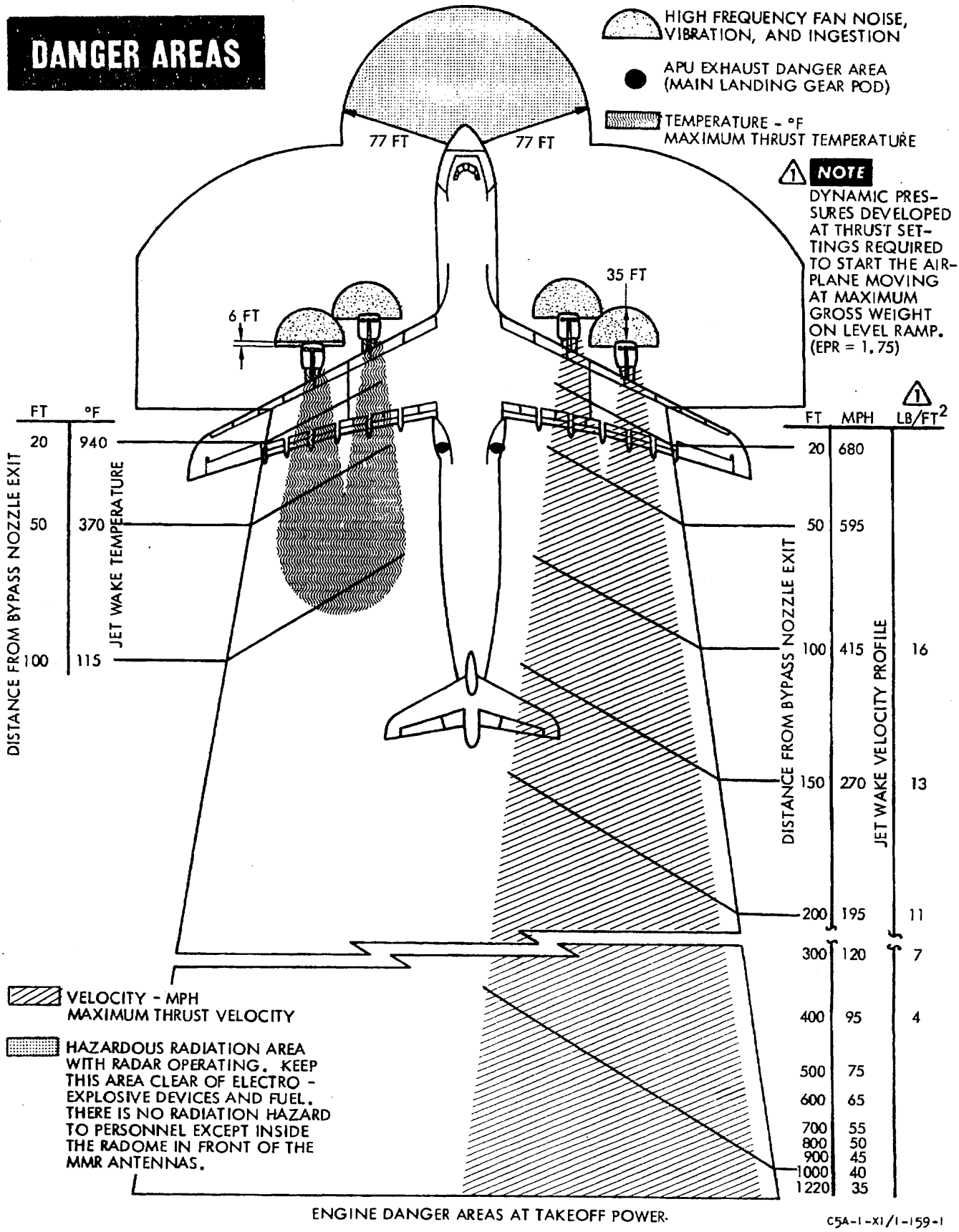

Figure 2-4. (Sheet 1 of 7)

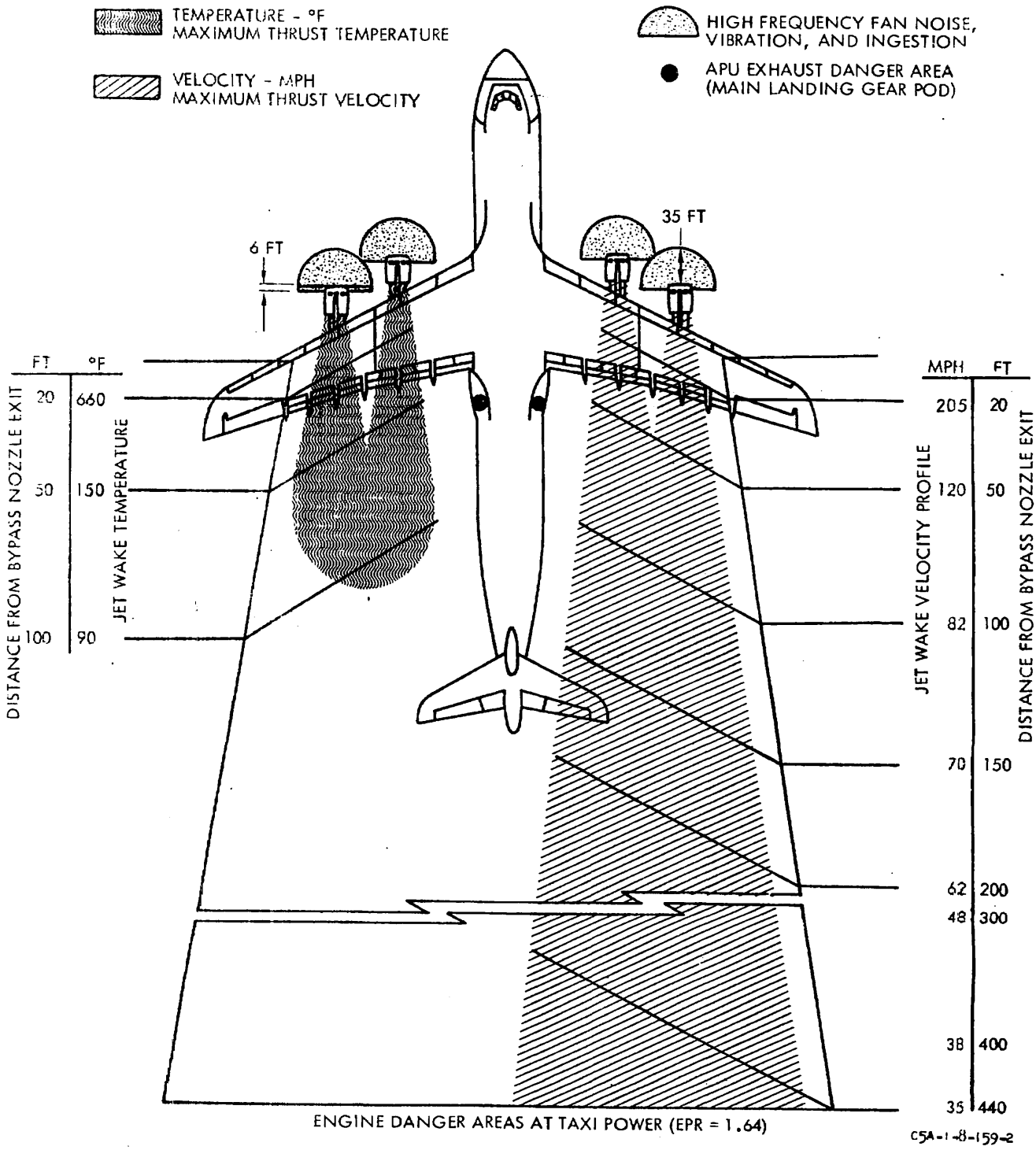

Figure 2-4. (Sheet 2 of 7)

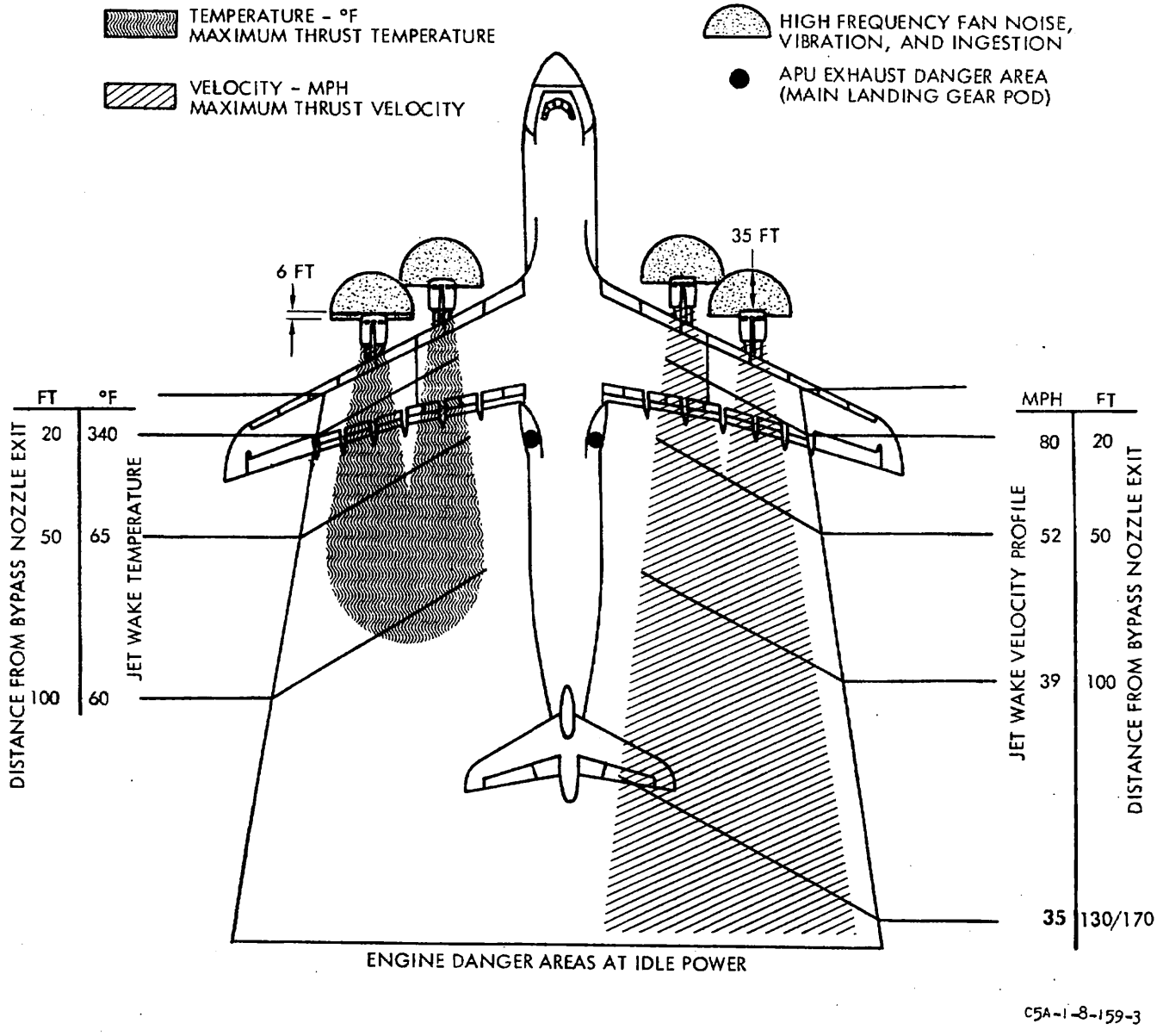

Figure 2-4. (Sheet 3 of 7)

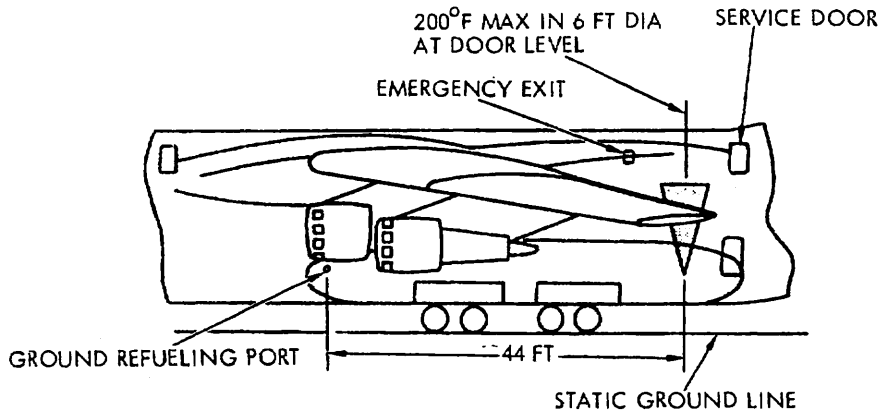

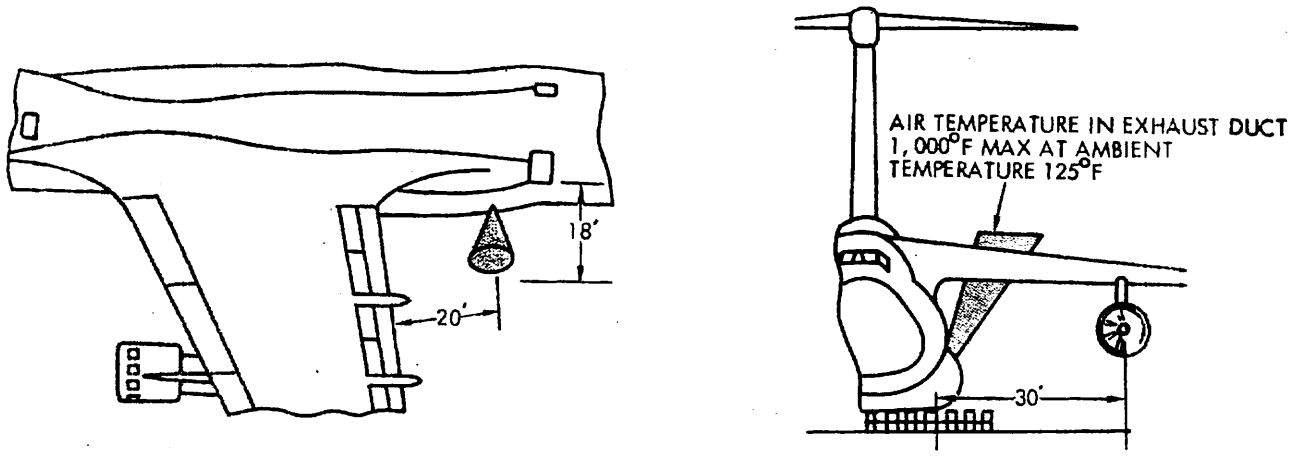

C-5 APU EXHAUST FLOW

REQUIRED EAR PROTECTION	
DECIBELS	REQUIRED EAR PROTECTION
0-85 DB	NO PROTECTION REQUIRED
85-100 DB	EAR MUFFS OR EAR PLUGS REQUIRED
ABOVE 100 DB	EAR MUFFS AND EAR PLUGS REQUIRED
135-145 DB	EAR MUFFS AND EAR PLUGS REQUIRED. LIMITED TIME EXPOSURE
ABOVE 145 DB	PROHIBITED

APU EXHAUST DANGER AREA
(MAIN LANDING GEAR POD)

C5A-1-XI/0-159-4

Figure 2-4. (Sheet 4 of 7)

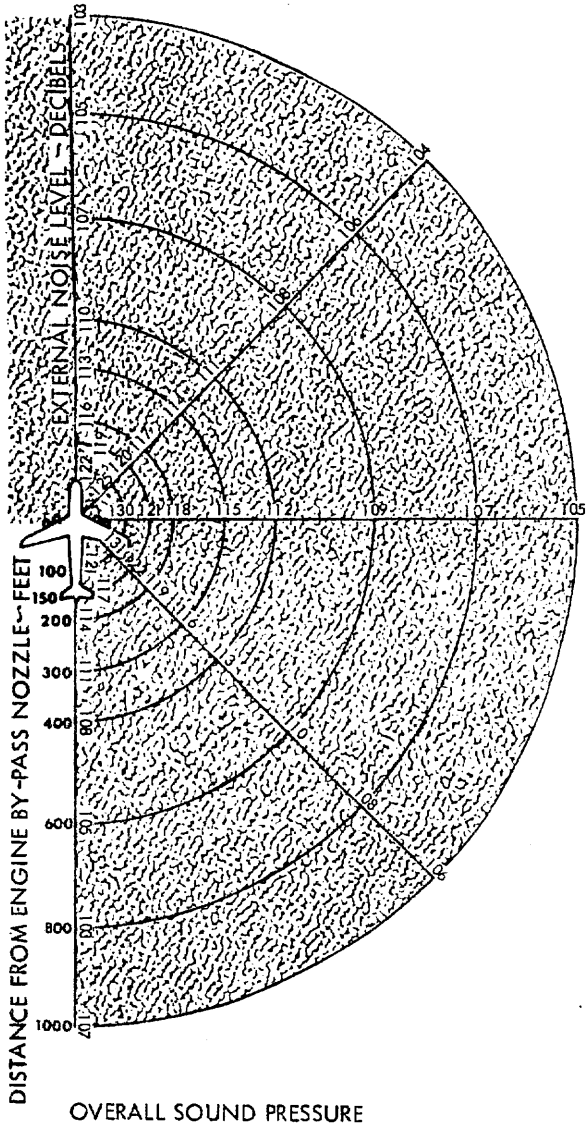

OVERALL SOUND PRESSURE LEVEL - 4 ENGINES AT TAKE-OFF POWER

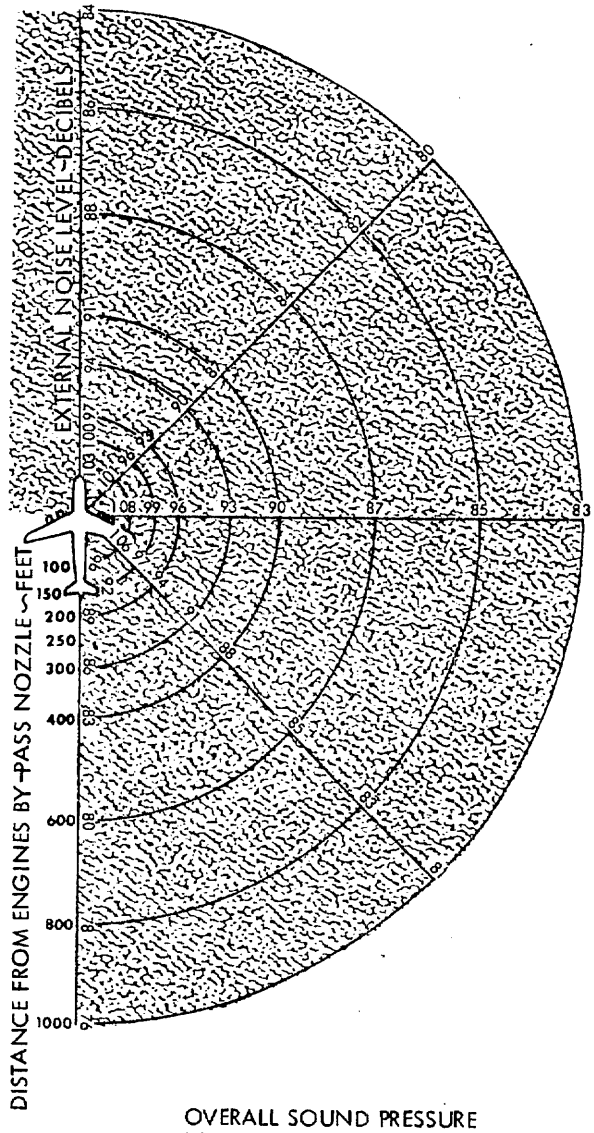

OVERALL SOUND PRESSURE LEVEL - 4 ENGINES AT IDLE POWER

SOUND PRESSURE LEVEL (DECIBELS)

NOTE

OVERALL NOISE LEVELS AT THE FAN DUCT ARE A MAXIMUM OF 148 DECIBELS.

C5A-1-X1/0-159-5

Figure 2-4. (Sheet 5 of 7)

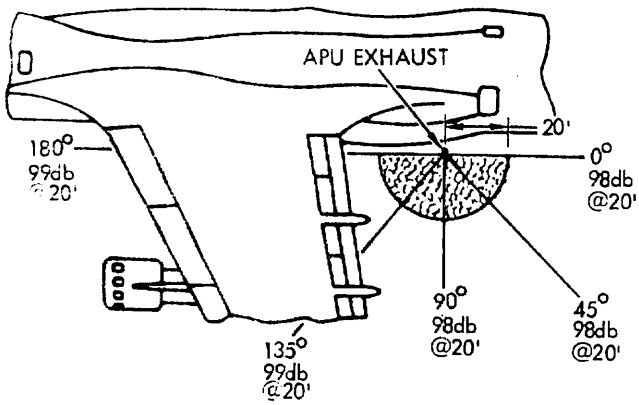

APU NOISE LEVEL

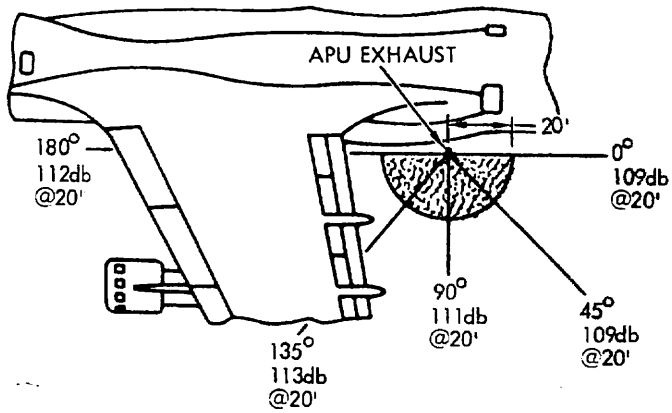

APU AND ATM NOISE LEVEL

NOTE

THIS REPRESENTS THE LOWEST AND HIGHEST NOISE LEVEL CASES. OTHER COMBINATIONS OF BLEED AND LOADING WILL CAUSE VARIATIONS WITHIN THIS RANGE.

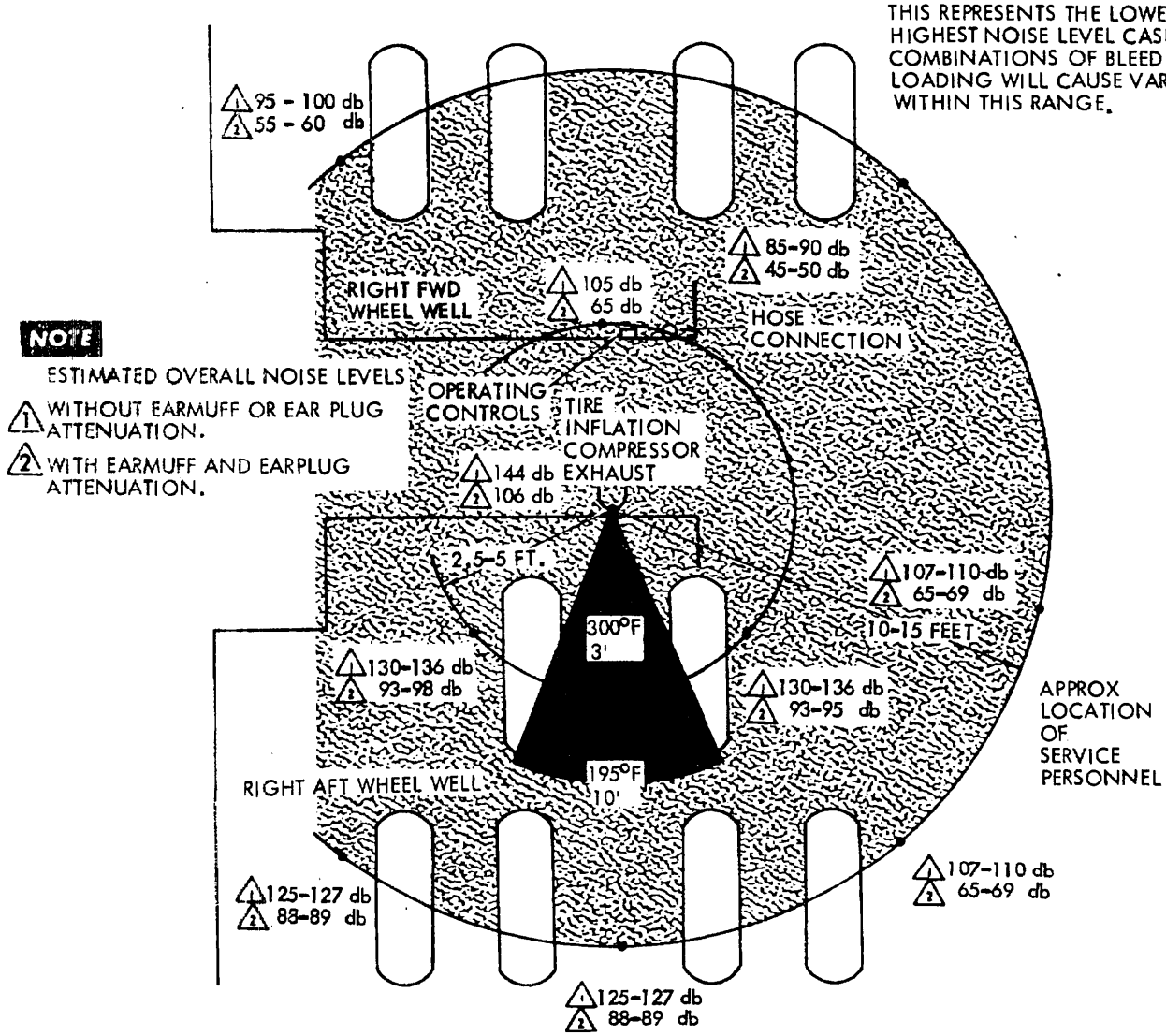

NOTE

ESTIMATED OVERALL NOISE LEVELS

1. WITHOUT EARMUFF OR EAR PLUG ATTENUATION.
2. WITH EARMUFF AND EARPLUG ATTENUATION.

NOISE LEVEL IN WHEEL WELL VICINITY WHEN TIRE INFLATION COMPRESSOR IS OPERATING

C5A-1-XI/O-159-6

Figure 2-4. (Sheet 6 of 7)

TEMPERATURE IS -320°F WITH REDUCTION OR ABSENCE OF ATMOSPHERIC OXYGEN.

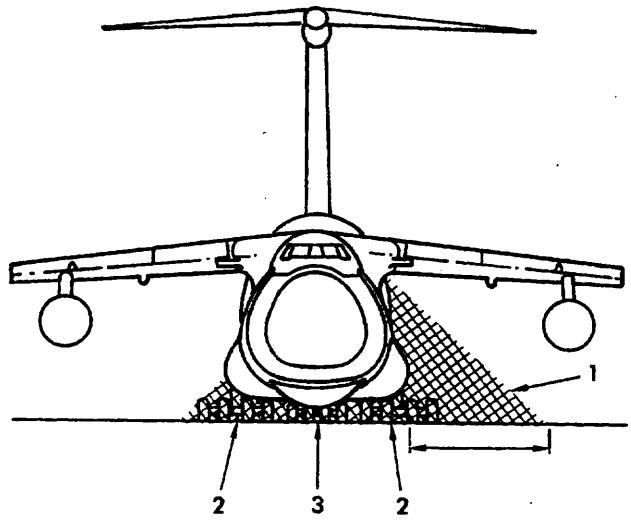

NOTE

LIQUID NITROGEN OVERBOARD VENTS ON AIRPLANES MODIFIED BY T.O. 1387.

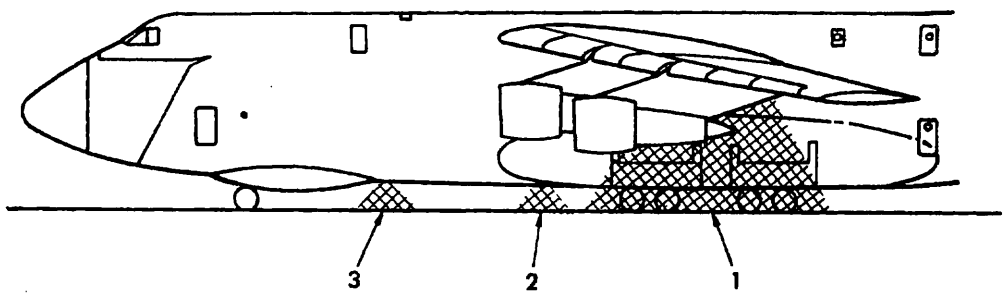

FSS LIQUID NITROGEN OVERBOARD VENT DANGER AREAS

1. DANGER AREA DURING SERVICING.
2. DANGER AREAS DURING PTU FSS OPERATION (LEFT AND RIGHT FWD MLG POD)
3. DANGER AREA DURING CARGO UNDERFLOOR FSS OPERATION.

C5A-1-X4/1-159-7

Figure 2-4. (Sheet 7 of 7)

PILOTS

1. Clear to Start Engines - "ENGINES CLEAR TO START" (S) "STARTING NO._____" (P)

Prior to starting each engine, the pilot shall state "STARTING No.___" The No. 1 Engine Starter button shall not be engaged prior to receiving the scanners "ENGINES CLEAR TO START" report.

Note

The copilot will monitor starting of each engine and advise the pilot if any limits are exceeded.

a. No. 1 Starter Button - IN (P)

Discontinue the start if the starter duty cycle, engine starting, or operating limits are exceeded.

b. No. 1 Fuel and Start Ignition - RUN (P)

When N_2 RPM reaches 11 percent, place the Fuel and Start Ignition switch to the RUN position.

During start, if fuel flow exceeds 700 PPH before light-off, discontinue the start.

If there is no oil pressure by N_2 idle RPM shut down the engine. If there is no indication of light-off within 30 seconds after the Fuel and Start Ignition switch is placed to RUN or the start is discontinued after light-off, move the Fuel and Start Ignition switch to STOP and motor the engine for 30 seconds, then pull the Starter button out.

FLIGHT ENGINEER

1. Air Cond Master Switch - OFF
2. Engine No. 1 - START

Note

When starting an engine, the manifold bleed air pressure should not be less than 13 PSI after the starter valve is open and pressure has stabilized.

Note

If a hung start should occur during the start cycle, discontinue the start. A second start should be attempted with the pressure augmenter valve closed (Aug Air switch in the OFF position). If the engine starts normally, the Aug Air switch can be placed to NORM.

As the engine is started, monitor:

a. Engine Instruments - NORMAL

Note

Advise the pilot if no oil pressure indication is observed.

b. Start Valve Open Light - CHECKED

If the start valve open light does not go off by N_2 idle RPM, advise the pilot and close the engine bleed valve and pressure augmentor valve.

c. Generator - CHECKED

If CSD fail light does not go off by N_2 idle RPM, disconnect the CSD.

Check that the gen out lights go off and the bus tie light comes on as the engine accelerates to N_2 idle RPM. When the engine stabilizes at N_2 idle RPM, check generator voltage and frequency.

SCANNER

1. Clear to Start Engines - "ENGINES CLEAR TO START" (S)

The scanner shall respond with the engine clearance when receiving challenge "ENGINES CLEAR TO START." No further scanner response is required prior to starting engines 2, 3, and 4. The scanner shall report any apparent malfunctions.

PILOTS	FLIGHT ENGINEER	SCANNER
If the Starter button does not pop out by N_2 idle RPM, pull it out. If the flight engineer advises that the start valve open light has not gone off by idle RPM, shut down the engine.	d. Hydraulic Pumps - NORM Place the Bot Hydraulic Pump switch to NORM after the engine stabilizes at N_2 idle RPM.	
If there is no indication of N_1 RPM do not advance the throttle beyond IDLE. Continue operating engine for 5 minutes maximum. If N_1 RPM still does not indicate rotation, shut down the engine and investigate the cause of malfunction.	e. Hydraulic Pressure and Quantities - CHECKED Check that the hydraulic pressure is within limits and that the boost press low and pump press low lights are off.	
c. Engine Instruments and Warning Lights - CHECKED (P,CP)	f. PTUs - AS REQUIRED Check hydraulic system pressures.	
d. To start remaining engines, repeat above procedure.	g. Repeat the above procedure for remaining engines.	
2. Continuous Ignition - "ON" (P)	h. Engine Anti-ice Switches - AS REQUIRED When temperatures are below 8°C and visible moisture is present, turn on engine anti-icing to preclude ice buildup during ground operation.	
	3. APU/EXT PWR Selector Switch - OFF	
	4. APU Generator Selector Switch - OFF Check that all bus tie open lights are off.	
	5. Monitor Bus Switches - NORMAL	
	6. Remove External Power - "REMOVING EXTERNAL POWER" (S) If external power was used for engine start, the engineer shall direct the scanner to remove the power at this time.	2. Remove External Power - "REMOVING EXTERNAL POWER" (S)

PILOTS	FLIGHT ENGINEER	SCANNER
	7. ATMs - OFF	
	CAUTION If an ATM pump pressure light comes on with the ATM switch in the OFF position, immediately depressurize its respective hydraulic system.	
3. Engineer's Report - "CHECK COMPLETED" (E)	8. Engineer's Report - "CHECK COMPLETED" (E)	
4. Starting Engines Check - "COMPLETED" (CP)		

BEFORE TAXI.

If the airplane was not unkneeled until after engine start, the scanner will inspect the wheel wells and then accomplish the landing/taxi light check and crosswind bite check in coordination with the pilot.

The flight engineer may initiate this checklist prior to being directed by the pilot.

PILOTS	FLIGHT ENGINEER	SCANNER
	1. Air Cond Master Switch - AS REQUIRED	
	2. Recirc Fan Switch - ON	
1. Kneeling System - "CHECKED UNKNEELED" (CP) On 68304, 68307, 70167, 70168 and 70170 through 00460 not modified by T.O. 1345, check Kneel Select switch in OFF position and all kneeling lights off. On 00461 and up and airplanes modified by T.O. 1345, check that the kneel light is off. Check gear lever warning lights off and NLG indicates gear down.	3. Kneeling System - CHECKED UNKNEELED (HYDRAULIC KNEELING SYSTEM) On 00461 and up and airplanes modified by T.O. 1345, flight engineer checks Kneel Select switch in OFF position, all kneeling lights off.	
2. NLG Gear Shift Switch - "HI SHIFT AND TEST" (CP) (PNEUMATIC KNEELING SYSTEM)	4. NLG Gear Shift Switch - HI SHIFT AND TEST (HYDRAULIC KNEELING SYSTEM)	

PILOTS

On 68304, 68307, 70167, 70168 and 70170 through 00460 not modified by T.O. 1345, place and hold the NLG Gear Shift switch to the HI SHIFT AND TEST position until the high/retract light comes on. If the light comes on immediately, the NLG shifter is in the high speed, low torque position. If the shifter is in the low speed, high torque position, as indicated by the low/kneel light being on, it will take approximately 2 seconds for high/retract light to come on.

3. Flight Augmentation - "ON" (P)

If the pitch augmentation system does not successfully test, do not engage the pitch autopilot.

If the pitch or lateral augmentation system fault light comes on during ground operations and cannot be reset and the system was successfully tested, the system may be used by following steps a and d.

If the yaw augmentation system did not successfully test and if mission requirements dictate, or if maintenance is not available, the system may be used by following steps a, b, c, and d.

If the yaw augmentation system fault light comes on during ground operations, cannot be reset, and the system was successfully tested, the system may be used by following steps a, b, c, and d.

If the yaw augmentation system is inoperative, the mission may be continued by following steps b and c and performing the required maintenance at the first base where such maintenance facilities are available.

CAUTION

If yaw augmentation is inoperative, damping of the Dutch Roll as provided by the augmentation systems will not be available, therefore, operation in moderate to severe turbulence should be avoided.

FLIGHT ENGINEER

On 00461 and up and airplanes modified by T.O. 1345, place and hold the NLG Gear Shift switch to the HI SHIFT AND TEST position until the high/retract light comes on. If the light comes on immediately, the NLG shifter is in the high speed, low torque position. If the shifter is in the low speed, high torque position, as indicated by the low/kneel light being on, it will take approximately two seconds for the high/retract light to come on.

4A. PTUs - CHECKED

a. Sys 1-2 PTU - ON

b. No. 1 Hydraulic Pumps - DEPRESS

Place the pump switches to DEPRESS, one at a time. Wait approximately two seconds between switch actuations.

Check Sys 1 pressure at 2,500 PSI minimum. If 2,500 PSI cannot be obtained, extend the flaps and check Sys 1 pressure at 2100 PSI minimum, steady, during flap extension. Retract the flaps.

c. No. 1 Hydraulic Pumps - NORM

Place the pump switches to NORM, one at a time. Wait approximately two seconds between switch actuations.

d. Repeat Steps a through c for Sys 3-4 PTU and No. 4 Hydraulic Pumps.

5. Hydraulic Pressures - CHECKED

6. Engine and Nacelle Inlet Anti-ice and Ice Detector Test - CHECKED

a. Engine Anti-ice Switches - ON

SCANNER

PILOTS

a. Re-engage each system and visually inspect the elevators, rudders and ailerons to ensure that a hardover surface does not exist.

b. Restrict airspeed to 300 KCAS/ .825 Mach

c. No abrupt rudder inputs or large sideslip angles should be generated

d. Crew alertness is stressed to the possibility of an elevator, rudder or aileron hardover. If such is suspected, the augmentation system should be immediately disengaged.

4. Ground Clearance - "ALL CLEAR" (S)

5. Clear to Board - "NLG PIN REMOVED/ BOARDING AIRPLANE" (S)

6. ADS Panel - "SAFE" (CP)

The copilot shall check paratroop air deflectors, Aft and Forward Cargo Door switches in SAFE position

7. Seat Belt Light - "ON" (CP)

8. IDNE Mode Status - "STATE MODE" (N)

The IDNE must be in the INRTL mode to accomplish the HAMS check.

9. HAMS Check - "AS REQUIRED" (CP)

FLIGHT ENGINEER

Check:

Engine Anti-ice On Lights - ON

b. Ice Detector Control Switch - AUTO

c. Engine Anti-ice Switches - OFF

d. Ice Detector Test Switch - TEST

Check:

Anti-ice On Lights - ON

Icing Light - ON

7. Ice Detector Control Switch - MANUAL

If icing is anticipated prior to establishing climb power, turn engine anti-icing on.

8. Take-off EPR - SET

Set EPR command markers to computed take off EPR. Command marker may be set prior to this point.

SCANNER

1. Ground Clearance - "ALL CLEAR" (S)

WARNING

Prior to responding "ALL CLEAR" the scanner shall determine that the airplane is clear of all obstructions for initial taxi and that personnel and equipment are not within the envelope of the engine danger areas at taxi power.

2. Clear to Board - "NLG PIN REMOVED/BOARDING AIRPLANE" (S)

After receiving pilot's clearance to board airplane, state "NLG PIN REMOVED/ BOARDING AIRPLANE"

Board airplane with NLG downlock pin, retract ladder, and close crew door.

Insure access cover to crew entrance door control is closed.

Visually inspect all hooks. The center of the roller should be on the flat of the hook approximately one and one-half inches from the point of the hook. This will ensure that they are properly engaged and latched. Visually inspect the lock actuator linkage (above the door) to insure that it is over center in the lock direction (outboard).

PILOTS	FLIGHT ENGINEER	SCANNER

Check that corresponding indications of pilot's and copilot's ADI agree within ±4 degrees, the pilot's and copilot's HSI and BDHI agree within ±6 degrees, no instrument warning flags are visible, HAMS inop and AHRU fault lights are off and all HAMS control panel lights are off.

Note

HAMS operation is limited to those flights with a qualified navigator as a crew member. The IDNE must be in an inertial mode to accomplish the check. The IDNE primary computer and analog-to-digital converter must be valid. For ground check, the primary computer must be the computer in control.

a. Pilot's and Copilot's Input Selector Switches - AHRU

b. Copilot's HAMS BITE Switch - TEST

   (1) Pilot's and copilot's ADI, HSI, and BDHI warning flags should be displayed.

   (2) HAMS inop and AHRU fault lights should come on.

   (3) All HAMS control panel lights should come on.

c. Copilot's HAMS BITE Switch - OFF

   (1) Pilot's and copilot's ADI, HSI, and BDHI warning flags should retract from view.

   (2) HAMS inop and AHRU fault lights should go out.

   (3) All HAMS control panel lights should go out.

d. Repeat steps b and c with pilot's HAMS BITE switch.

e. Pilot's and Copilot's Input Selector Switches - IMU

   The HAMS inop light should come on.

f. Copilot's HAMS BITE Switch - TEST

PILOTS	FLIGHT ENGINEER	SCANNER
(1) Pilot's and copilot's ADI, HSI and BDHI warning flags should be displayed.		
(2) Pilot's and copilot's HSI and BDHI should indicate a change of heading of 45 (±20) degrees to the right and the ADIs should indicate a climbing right bank.		
(3) AHRU fault light should come on.		
(4) HAMS control panel lights should remain out.		
g. Copilot's HAMS BITE Switch - OFF		
(1) Pilot's and copilot's ADI, HSI, and BDHI warning flags should retract from view.		
(2) Pilot's and copilot's ADI, HSI, and BDHI indications should return to original attitude/heading.		
h. Repeat steps f and g with pilot's HAMS BITE switch.		
i. Pilot's and Copilot's HAMS Selector Switches - AHRU		
10. Door Open Lights - "OFF" (CP)	9. Door Open Light - OFF	
11. Brake Switch - "NORMAL" (CP) Copilot shall check for proper brake pressure.		
12. Crew Taxi Report - "_____ READY" (N,E,LM,S)	10. Crew Taxi Report - "ENGINEER READY" (E) Assure that the checklist is complete. If a loadmaster is not on the flight deck, assure that the relief crew area and courier area are ready. Make the aft flight deck report in proper sequence.	3. Crew Taxi Report - "SCANNER READY" (S) The scanner will ensure that the cargo compartment is secure for taxiing.
13. Before Taxi Check - "COMPLETED" (CP) Copilot and pilot shall clear right and left prior to taxi.		

TAXI.

CAUTION

If main landing gear is not positioned with the center line of the airplane, clear the airplane laterally as forward motion is required to center the gear. Aft main landing gear caster is inoperative when crosswind gear position is selected.

Note

On 68304, 68307, 70167, 70168, and 70170 through 90027 not modified by T.O. 1509, the print lights on the MADAR control and sequence unit flash briefly whenever the NLG steering wheel is displaced more than one-half degree from center. The flashing print lights should be ignored until the NLG steering wheel is returned to center (zero) position.

Extreme caution should be used while taxiing at loadings aft of 32% C.G. At these loadings it is very easy to move the nose wheel steering too rapidly and too far and thus lose steering effectiveness. If steering effectiveness is lost, return the steering control knob to near zero and slowly move the steering control in the direction of desired movement. Once steering effectiveness is lost, added movement in the direction of the desired turn will only aggravate the situation. The above techniques are even more applicable on a wet or icy surface.

CAUTION

While taxiing below 20 knots the anti-skid system should be turned off to preclude loss of braking.

Thrust requirements for taxi depend on the type and condition of the ramp, gear position, and the gross weight of the airplane. Maintain directional control by use of nose wheel steering. Refer to figure 2-5 for minimum turning radius and ground clearance.

Castering of the aft main landing gear will not normally be required for turns of less than approximately 60 degrees. When castering is to be accomplished, the pilot should place the MLG Caster Control switch to the CASTER position and state "CASTER" or direct the copilot to caster by stating "COPILOT CASTER." When the nose wheel steering angle is reduced to come out of the turn, the pilot shall place the MLG Caster Control switch to the CENTER position and state "CENTER" or direct the copilot to center by stating "COPILOT CENTER." Do not use the guard to return the switch to the CENTER position. Forward motion of the airplane should be maintained.

CAUTION

Copilot shall monitor the aft main gear crosswind position indicators and advise the pilot if improper indications are observed.

Note

If the MLG free lights remain on after the Caster switch is placed to CENTER and the gear is centered, caster operation may be used as required. Crosswind positioning must not be selected and the X-wind Shutoff Valve Cont circuit breaker must be pulled and the gear centered prior to flight.

If the aft main gear crosswind position indicators do not begin an immediate return towards the zero degree position, the copilot will actuate the Crosswind Reset switch to RESET. If the aft main gear crosswind position indicators still do not move toward zero, the copilot will actuate the affected aft main landing gear Bogie Emergency Positioning switch(es) to insure that movement to the zero position is accomplished.

ALTERNATE CASTER PROCEDURE.

When operating with a failed crosswind computer or if a caster malfunction was observed during taxi, the following alternate caster procedure may be used.

CAUTION

The airplane must be moving prior to and during actuation of the aft MLG Bogie Emergency Positioning switches.

TURNING RADIUS AND GROUND CLEARANCE

AFT MLG CASTERING

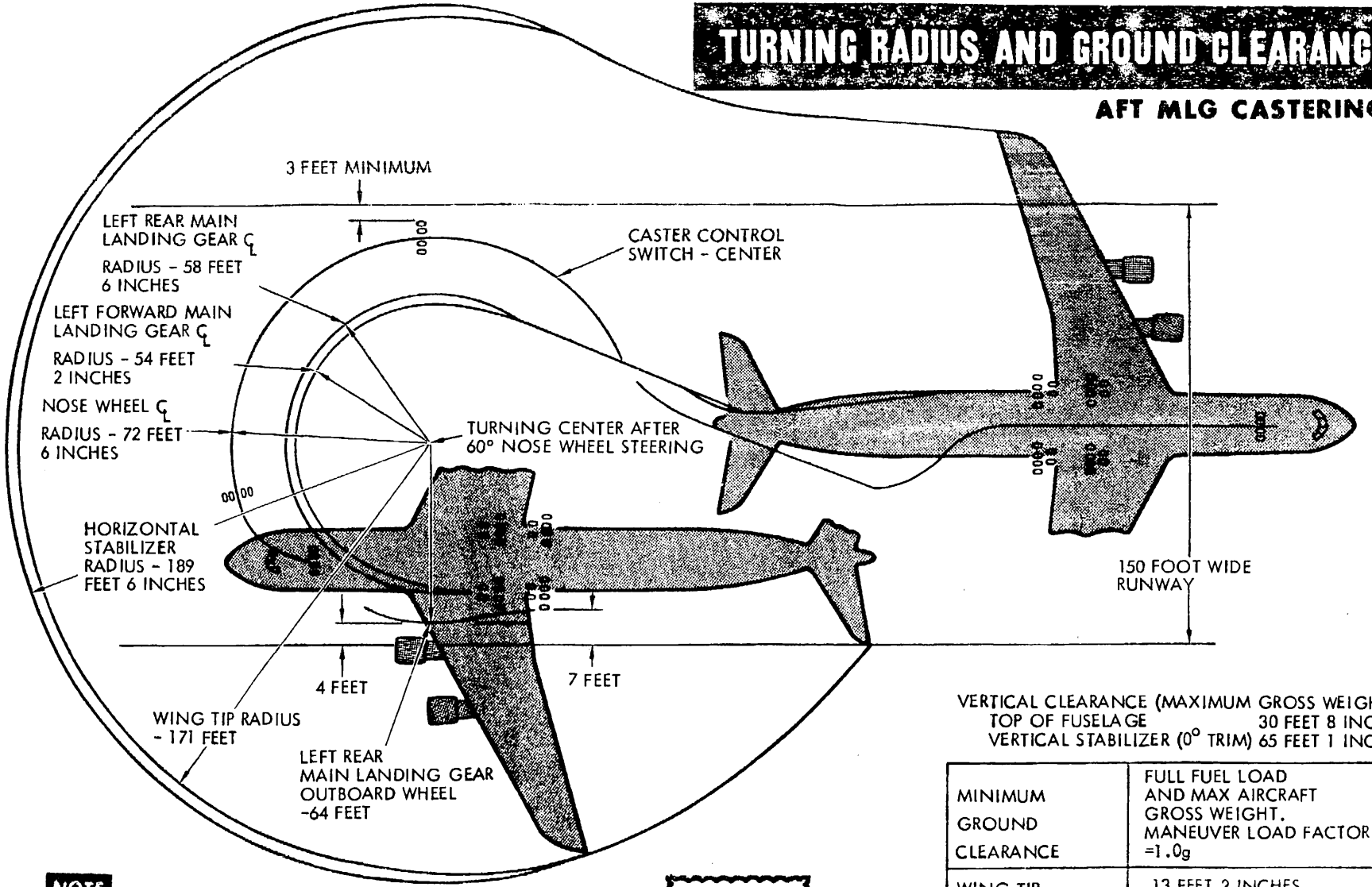

VERTICAL CLEARANCE (MAXIMUM GROSS WEIGHT)

TOP OF FUSELAGE	30 FEET 8 INCHES
VERTICAL STABILIZER (0° TRIM)	65 FEET 1 INCH

MINIMUM GROUND CLEARANCE	FULL FUEL LOAD AND MAX AIRCRAFT GROSS WEIGHT. MANEUVER LOAD FACTOR =1.0g
WING TIP	13 FEET 2 INCHES
OUTBOARD NACELLE	8 FEET 8 INCHES
LOWEST POINT OF FUSELAGE (NOSE GEAR POD)	3 FEET 6 INCHES

C5A-1-X2/0-105-1

NOTE

1. MAXIMUM DESIGN GROSS WEIGHT
2. AVERAGE C.G. LOCATION 26.4% MAC
3. DRY CONCRETE PAVEMENT
4. NOSE LANDING GEAR STEERING ANGLE OF 60°
5. TAXI TURN SPEED 4 KNOTS
6. ASYMMETRICAL THRUST
7. AFT MAIN LANDING GEAR CASTERING SELECTED PRIOR TO STARTING THE TURN

CAUTION

AT TAXI WEIGHTS LESS THAN MAXIMUM GROSS WEIGHT, ON A WET RUNWAY, WITH 60° NOSEWHEEL STEERING, MAXIMUM INPUT RATE, MAXIMUM TAXI TURN SPEED, DIFFERENTIAL BRAKING AND ASYMMETRICAL THRUST, THE STABILIZER TIP RADIUS MAY INCREASE BY AS MUCH AS 6 FEET.

Figure 2-5. (Sheet 1 of 2)

AFT MLG CENTERED AND FIXED

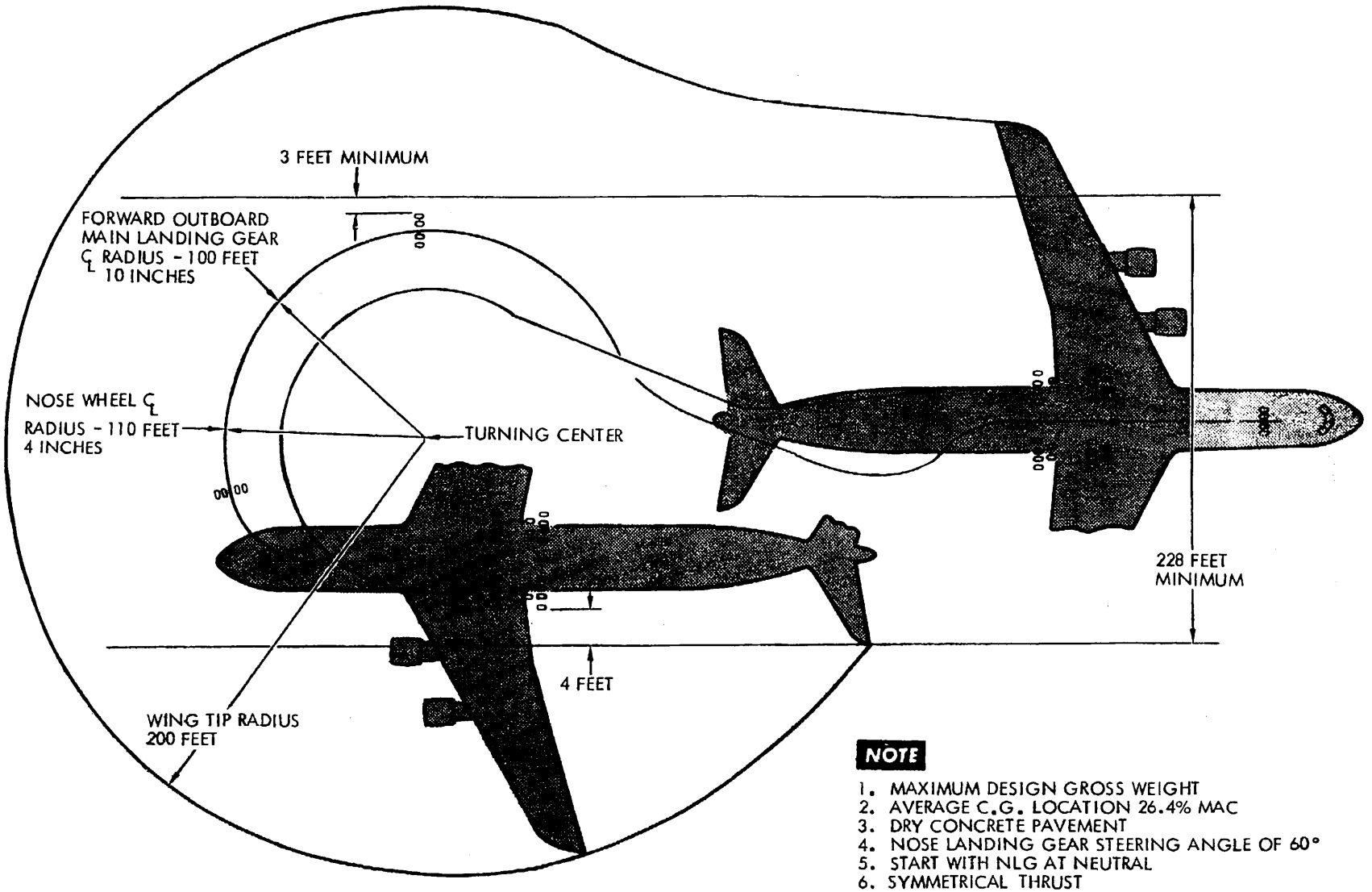

NOTE

1. MAXIMUM DESIGN GROSS WEIGHT
2. AVERAGE C.G. LOCATION 26.4% MAC
3. DRY CONCRETE PAVEMENT
4. NOSE LANDING GEAR STEERING ANGLE OF 60°
5. START WITH NLG AT NEUTRAL
6. SYMMETRICAL THRUST
7. TAXI TURN SPEED 4 KNOTS

C5A-1-X1/0-105-2

Figure 2-5. (Sheet 2 of 2)

During taxi turns, the aft MLG Bogie Emergency Positioning switches can be used to position the aft gear in the opposite direction to the turn, not to exceed 15°. When coming out of the turn, actuate the aft MLG Bogie Emergency Positioning switches to drive the aft gear back to zero.

CAUTION

When possible, avoid braking to a stop in turns from any taxi speed, since damage to nose landing gear and/or supporting structure may result.

PILOTS	FLIGHT ENGINEER	SCANNER
1. Brakes - "CHECKED" (P) On initial taxi, check normal brakes.		
2. Flight Instruments - "CHECKED" (CP,P) The copilot shall be responsible for checking the magnetic compass. Both pilots will check their turn and slip indicator, (ball is free in its glass tube), all heading indicators read correctly and compass repeaters are aligned and rotating. Rotate the ADI pitch trim knob and check for proper movement, type of pitch scale and align with reference mark.		
3. Taxi Check - "COMPLETED" (CP)		

BEFORE TAKE-OFF.

This checklist may be performed while taxiing in uncongested areas, providing outside vigilance is maintained.

PILOTS	FLIGHT ENGINEER	SCANNER
1. Flaps and Slats - "STATE SETTING" (CP,P) State flap and slat position indicator readings. When moving the flap handle from the UP position to the 40 percent position or vice versa, the handle motion should be positive and not "milked" along with flap/slat movement. Pause until flap/slat movement has stopped before reverse movement is initiated. Slat decouple can occur if this technique is not followed.	1. Cabin Pressurization - SET a. Pressurization Mode Selector Switch - FLIGHT b. Flight Altitude Selector - FLIGHT ALTITUDE **Note** To prevent interaction between isobaric and maximum Delta P control, it is suggested that the altitude selector be set 500 feet above flight altitude.	

PILOTS

2. Seat Belts and Shoulder Harnesses - "ADJUSTED" (CP)

   The copilot will ensure that both pilots have fastened and adjusted their seat belts and shoulder harnesses. Both pilots will ensure that their shoulder harnesses are unlocked.

   WARNING

   Check that the fore, aft, lateral seat adjustment lever is in neutral. Pilots shall ensure that their seats are locked in place.

3. Crew Briefing - "COMPLETED" (P)

   The pilot shall brief the applicable items listed below beginning with the type of take-off.

   a. Engine anti-ice

   b. EPR

   c. Acceleration check time and speed

   d. Go speed

   e. Rotation speed

   f. Flap retraction speed

   g. Setting of command markers and radar altimeters

   h. Departure intentions to include significant restrictions and hazardous terrain.

   i. Nav radios set-up for departure

   j. Emergency return intentions

   Set pilot's command airspeed marker at rotation speed and copilot's marker at go speed. Command altitude markers may be set at pilot's discretion.

   The crew briefing may be accomplished prior to this point.

FLIGHT ENGINEER

2. Fuel Panel - SET

   CAUTION

   If fuel inlet temperature is below 0 degrees C, operate fuel heaters for one minute at idle RPM.

3. PTUs - ON

4. Seat Belt and Shoulder Harnesses - ADJUSTED

   A hold may be placed on APU shutdown if APUs are required for air conditioning.

5. APU Iso Valves - CLOSE

6. APUs - OFF

   a. APU Bleed Switches - CLOSED

   b. APU Cont Switches - STOP

      Allow APU EGT to stabilize before placing the APU Cont switch to STOP.

      Check APU on speed and door open lights off.

   CAUTION

   APU operation in flight should be limited to actual emergencies. The airplane skin aft of the APU exhaust duct will be damaged any time the APUs are operated in flight for more than three minutes.

SCANNER

PILOTS | FLIGHT ENGINEER | SCANNER

4. Radios, Radar, Radar Altimeters and IFF - "CHECKED AND SET" (CP, P)

   Normally only one VHF/UHF command radio, guard and interphone will be monitored by the pilot and copilot. The copilot will advise the crew any time the primary radio is changed. The pilot will brief on any changes to NAV radio set up for departure. Pilot and copilot will check their BDHI and HSI for proper NAV selection and indications. On 90005 and up and airplanes modified by T.O. 1440, test the IFF using the IFF self-test procedures. The required radios, radar, radar altimeters and IFF may be checked and set prior to this point.

5. Ram Air Turbine Switch - "AUTO" (P)

6. Altimeters - "STATE SETTING AND ALTIMETER READING" (CP,P,N)

   This check is made to insure that altimeter readings are checked in close proximity to the runway due to altitude variations that may exist between the ramp and the runway.

   The pilot and copilot will check their altimeters to ensure that the altitudes are within 70 feet of each other and read within ±75 feet of the field elevation.

7. Flight Controls - "CHECKED" (P)

   See 155-103

   The pilot will move all flight controls through full travel, holding the nose gear steering wheel steady while checking rudder pedal travel.

PILOTS

FLIGHT ENGINEER

SCANNER

CAUTION

During control system ground checks, abrupt rapid movement of the controls to the full travel position or abrupt change in direction could cause structural damage.

This check may be accomplished anytime after calling for this checklist.

8. Trim - "CHECKED AND SET" (CP)

PILOTS

On 68304, 68307, 70167, 70168, and 70170 through 00460 not modified by T.O. 1334, the copilot shall ensure that the allerons are uprigged 6 degrees and that the rudder trim is properly set.

On 00461 and up and airplanes modified by T.O. 1334, the copilot shall ensure that the aileron trim indicator reads 0 degrees and that the rudder trim is properly set.

The stabilizer trim shall be checked for proper operation and set to computed setting for take-off using the Pitch Trim switches.

9. Spoilers - "CLOSED" (CP)

   Check that the spoiler handle is closed and the indicator reads RETRACT.

10. Rudder Lim Switch - "AUTO" (CP)

11. Warning Lights - "CHECKED" (CP)

    All caution and annunciator lights shall be checked for proper indication including the overhead panel. Annunciator and warning lights that are on shall not be turned off until directed by the pilot.

12. Crew Take-off Report - "_____ READY" (N,E,LM,S)

13. Before Take-off Check - "COMPLETED" (CP)

FLIGHT ENGINEER

7. Crew Take-off Report - "ENGINEER READY" (E)

SCANNER

1. Crew Take-off Report - "SCANNER READY (S)

   Assure flight deck entrance door is closed. If loadmaster is not on flight deck, assure that relief crew and courier area are ready. Make aft flight deck report in proper sequence. Return to seat and fasten seat belt.

LINEUP.

PILOTS

FLIGHT ENGINEER

SCANNER

This check shall be accomplished just prior to taxiing onto, while taxiing onto, or in position on the runway depending on type of take-off accomplished.

1. IFF - "SET" (CP)

PILOTS | FLIGHT ENGINEER | SCANNER

2. AFCS Master Power Pushbutton On Light - "OFF" (P)

   Check that the master power on light and the pitch, lateral, and auto throt lights are off. If the lights are not off, depress the AFCS master power pushbutton and repeat the check.

WARNING

Ensure that the airspeed command markers remain at the appropriate setting for the computed performance data, departure runway utilized and any airspeed corrections required.

3. Trim Settings - "CHECKED" (P)
4. Flaps and Slats - "STATE SETTING" (CP)

   State flap and slat position indicator readings.

5. Pitot Heat and Angle-of-Attack De-Ice - "ON" (CP)
6. Anti-skid Switch - "ON" (CP)
7. Caster Control - "CENTER" (CP)

   Copilot will check that the free caster lights are off and that the main landing gear is aligned to 0 degrees.

   When operating with a failed crosswind computer but operable castering, open the X-Wind Shutoff Valve Cont circuit breaker on the flight engineer's circuit breaker panel No. 5 after lineup and completion of castering operation.

8. Landing Gear Crosswind Positioning - "SET___ DEGREES _____" (CP)

   The copilot shall set in the required setting with the Crosswind Positioning knob and check the nose and main gear crosswind position indicators for the proper indication. He shall then state the setting.

9. Lineup Check - "COMPLETED" (CP)

TAKE-OFF.

The following paragraphs discuss rolling and standing take-offs, obstacle clearance, gust correction, and crosswind. Use the performance charts contained in Part 2 and 3 of T.O. 1C-5A-1-1 to predict airplane performance for any take-off. A normal take-off will be accomplished using 40 percent flaps. The 62.5 percent take-off flap setting is used when the runway length available is the limiting factor in the determining of maximum mission take-off gross weight. A typical take-off and initial climb pattern is shown in figure 2-6.

Note

Full throttle will normally not be required to achieve computed TRT-STATIC EPR. If full throttle is required, record as a discrepancy.

On airplanes with inoperative rudder pedal steering, the pilot's left hand will remain on the nose gear steering wheel until the rudder is effective for directional control (approximately 60 KCAS).

Rudder pedal steering will normally be used during the take-off roll and there will be a delay of up to 3 seconds before rudder pedal steering becomes effective after transitioning from the nose gear steering wheel.

THROTTLE SETTING PROCEDURE.

The Take-Off EPR is dependent on the selection of Reduced EPR Take-Off or TRT EPR Take-Off procedure. The methods for determining Take-Off EPR are given in Part 3 of T.O. 1C-5A-1-1. Once the Take-Off EPR setting has been determined, the throttle setting procedure is the same for both Reduced EPR and TRT EPR Take-Off.

The Take-Off Inflight EPR is the minimum EPR setting which must be maintained following an engine failure to ensure that planned climbout performance is achieved. The Take-Off Inflight EPR is also dependent on the take-off procedure and is determined in accordance with the methods given in Part 3 of T.O. 1C-5A-1-1.

While setting throttles for take-off, a TRT Assurance Check shall be made. The purpose of the check is to determine if the engines are capable of obtaining TRT in high ambient temperatures. The flight engineer shall accomplish the TRT Assurance Check by comparing the indicated TIT with the Assurance Check TIT at the Take-Off EPR, determined from Part 2 of T.O. 1C-5A-1-1.

The Take-Off EPR setting shall be achieved in a time of 25 seconds using the following procedures for standing or rolling take-off:

Step 1. Determine the TRT Assurance Check TIT.

Step 2. The flight engineer shall set the EPR command marker to the Take-Off EPR.

The pilot will notify the flight engineer when he is advancing the throttles to set take-off power by stating "advancing throttles - now". The flight engineer will start the 25 second time on the command of "now". In the first 15 seconds, the pilot will advance the throttles to the approximate take-off power setting. The copilot will fine adjust the throttles in the next 10 seconds in order to have the take-off EPR set at the end of 25 seconds. The flight engineer will notify the pilot when 15 and 20 seconds have elapsed. At 25 seconds, the flight engineer will state "time" and accomplish the TRT Assurance Check.

Note

For the TRT Assurance Check to be valid, the throttles must not be moved after 25 seconds.

Note

If a standing take-off is performed, the pilot will release the brakes when the flight engineer states "time".

The two minute TIT transient limit (910°C) will not be exceeded in this procedure. If the indicated TIT is then equal to or less than the TIT determined from Step 1, the TRT Assurance Check is satisfactory.

Note

If the indicated TIT exceeds the TRT Assurance Check TIT, an entry must be made in Form 781, since the engine will not attain TRT at high ambient temperatures.

WARNING

If the Take-Off EPR cannot be obtained without exceeding the two minute TIT transient limit (910°C), or the TRT Assurance Check TIT plus 20°C, the take-off shall be rejected.

TYPICAL TAKE-OFF AND INITIAL CLIMB

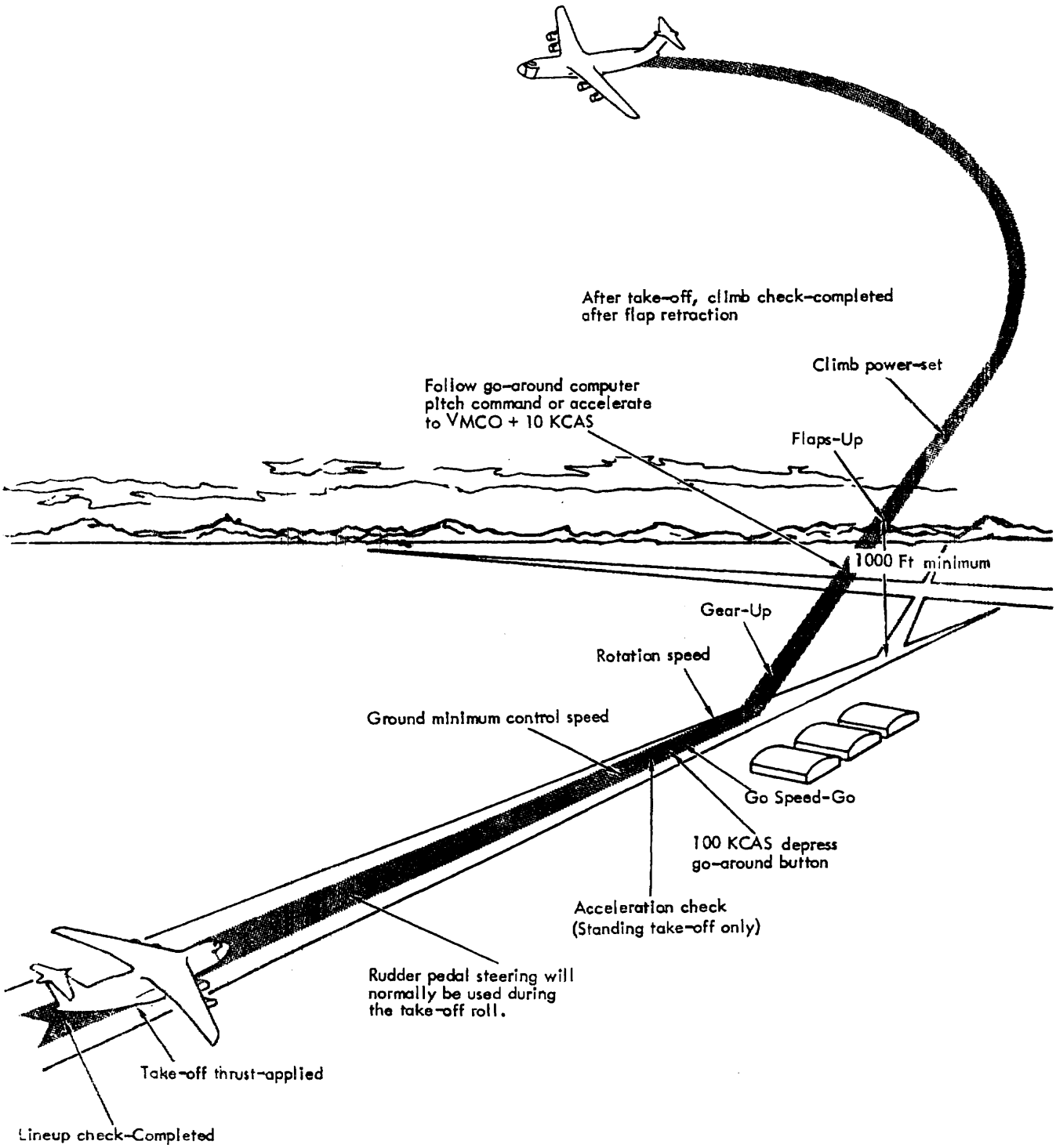

Figure 2-6.

Note

In ambient temperatures of -15°C and below when making a Reduced EPR Take-Off, it may be necessary to exceed planned Take-Off EPR when setting throttles to avoid operating at N_1 (fan speed) values of less than 84 percent.

Step 3. After Take-Off EPR is set, no further adjustments to the throttles should be necessary.

When making a standing take-off in light and variable winds, crosswinds, or tailwinds, however, the EPR indication may be erratic in the static take-off conditions. EPR shall be monitored at the start of the take-off roll and throttles should be adjusted as necessary to obtain Take-Off EPR by approximately 50 KCAS.

CAUTION

The engine TIT limitations shall not be exceeded during the throttle set or damage to the engine may occur.

CAUTION

Maximum recommended gross weight is based on having planned Take-Off Inflight EPR. Any reduction in EPR below the Take-Off Inflight EPR used for planning will result in a lesser climb capability than predicted.

STANDING TAKE-OFF.

The standing take-off technique is:

a. While holding brakes, the pilot advances the throttles to Take-Off EPR using the throttle setting procedure described above.

b. Release brakes. The copilot shall backup the throttles and monitor power to avoid exceeding TIT limits. The pilot, however, shall maintain primary control of the throttles until reaching GO speed.

c. A speed-vs-time acceleration check shall be made by the copilot except when a measurable depth of runway surface covering exists. This check will measure elapsed time between brake release and a selected speed which is at least 10 knots less than GO speed.

d. If a condition arises before GO speed is reached which would make the take-off unsafe, the crew member observing the condition shall state "REJECT" on interphone and the take-off shall be discontinued.

e. Upon reaching GO speed the copilot shall state "GO" on interphone. If an engine failure occurs after reaching GO speed, the take-off should be continued.

WARNING

If the take-off is discontinued after reaching GO speed, stopping on the remaining runway may not be possible.

f. At rotation speed, smoothly apply back pressure, establish a nose up attitude on the ADI of 8 to 10 degrees and allow the airplane to fly off the runway. The copilot will monitor the throttles and insure that they do not creep back during climb.

CAUTION

Aft fuselage contact may occur with a pitch attitude in excess of 13 degrees during rotation.

ROLLING TAKE-OFF.

A rolling take-off is the preferred method and should be made when conditions permit. The runway available is reduced in accordance with the procedures given in Part 3 of T.O. 1C-5A-1-1. The following procedure for a rolling take-off shall be used.

a. The Lineup checklist shall be completed prior to advancing the power for take-off.

b. The power shall be advanced to the Take-Off EPR using the throttle setting procedures described above. The TIT should be monitored during the ground roll to ensure that the limits are not exceeded.

c. From this point, continue with standing take-off procedure. An acceleration check is not required.

WARNING

When making an obstacle clearance or critical field length take-off, set throttles to Take-off Static EPR prior to brake release to assure computed performance is attained.

INSTRUMENT TAKE-OFF.

There are no known unusual characteristics of this airplane during instrument flight conditions. Complete the Taxi and Before Take-Off checklists. Select the navigation aids to be used for the departure and set the desired course in the course selector window. Rotate the ADI Pitch Trim knob to zero and check for a near level flight indication. The HSI heading marker may be set to the runway heading or the initial departure heading, whichever is the most logical for the departure being flown.

After aligning the airplane on the runway, check the heading indications. Complete the Lineup checklist and make a standing or rolling take-off as described in this section. Maintain runway alignment by visual means as long as possible.

ROTATION GO-AROUND COMPUTER TAKE-OFF.

At approximately 90 to 100 knots, depress the G/A pushbutton. The pitch steering bar will come into view and command a nose-up attitude. As rotation speed is reached, smoothly apply back pressure, establish a nose up attitude on the ADI of 8 to 10 degrees, and allow the airplane to fly off the runway. When airborne, smoothly rotate the airplane to the pitch attitude which centers the pitch steering bar. In case of a pitch steering bar malfunction, follow the procedures in step f of the Standing Take-Off Procedure. Do not exceed 13 degrees pitch after take-off until well clear of the ground.

CAUTION

Rapid rotation of the airplane may result in an over-shoot of the desired pitch angle and/or the pitch steering bar. This situation is more likely to occur with an aft C.G. loading. The aft fuselage may contact the runway if pitch attitude is in excess of 13 degrees in close proximity to the ground.

Note

The G/A system is a valuable aid during the take-off and climb-out maneuvers. It programs the angle-of-attack for the best climb angle, a wings-level climb-out if the Hdg button on the Navigation Selector is disengaged, and a turn to the pre-set heading if the Hdg button is engaged.

The G/A command is valid for any flap setting; for a tumbled ADI; for a failed airspeed indicator; and compensates for a failed engine or reduced power.

GUST CORRECTION.

Just prior to taking the active runway verify present gust conditions. Increase rotation speed equal to the gust increment up to a maximum of 10 knots. Set this new value in the pilots command airspeed marker. When GO speed is based on rotation speed it shall be readjusted by the same increment, but not to exceed refusal speed or maximum braking speed. When GO speed is readjusted the copilot shall set this new value on his command airspeed marker.

CROSSWIND.

Make the take-off on the center line of the runway. If the crosswind positioning system is not being used, apply aileron into the wind to keep the upwind wing level or slightly down during the take-off roll.

The landing gear crosswind positioning system may be used for take-off provided:

a. A satisfactory BITE test was completed during the Preflight Checks.

b. The proper setting, but no greater than 18 degrees, has been selected with the Crosswind Positioning knob.

The airplane must be aligned with the runway, the main landing gear must be centered, and the airplane must be moving while selecting the crosswind gear position. During the take-off roll, maintain the wings level with aileron.

If the crosswind inoperative light comes on, refer to Crosswind Asymmetry Malfunction During Taxi (Crosswind Inoperative Light On) in Section III.

CAUTION

All gear must be within 4 degrees of each other prior to take-off.

NORMAL CLIMBOUT TECHNIQUE.

a. When the airplane is definitely airborne and a positive rate of climb is shown in the vertical velocity indicator and the altimeter, the pilot will give an oral signal "GEAR UP." The copilot will acknowledge and place the Landing Gear lever in the UP position. Observe that the light in the gear lever and landing gear indicators are indicating proper positions while the gear is in transit.

CAUTION

After take-off, the lockout for the ground spoiler handle will remain retracted and allow ground spoiler deployment until the MLG wheels spin down.

CAUTION

After take-off, the thrust reverser interlock will not be activated until after the MLG wheels spin down. This situation will allow operation of the thrust reversers on engines No. 1 and 4 or operations of the thrust reversers on engines No. 2 and 3 beyond reverse idle.

b. Keep the pitch steering bar centered and cross-check the airspeed indicator to insure a minimum of V_{MCO} until flap retraction altitude (minimum 1000 feet above field elevation). Depress the G/A push-button to retract the pitch steering bar from view. Maintain a pitch attitude which will result in level flight or a positive rate of climb, accelerate to flap retraction airspeed and retract the flaps. Accelerate to climb speed utilizing a climb rate of approximately 500 ft/min and set climb power. If appropriate, the heading mode should be disengaged, and the normal course interception procedure followed.

c. When the pitch steering bar is not used, climb at V_{MCO} plus 10 knots until reaching flap retraction altitude. Do not exceed 15 degrees of pitch on the ADI. At or above 1,000 feet above field elevation, maintain a pitch attitude which will result in level flight or a positive rate of climb, accelerate to flap retraction airspeed and retract the flaps. Accelerate to climb speed, utilizing a positive rate of climb, and set climb power.

CAUTION

The pilot shall not exceed slat/flap extended airspeed limitations until the copilot reports the flaps and slats indicate up and retracted.

d. If departure maneuvering is required prior to reaching flap retraction altitude, maintain the take-off flap setting and maneuver at V_{MCO} plus 10 knots. If departure maneuvering is required after flap retraction, do not exceed 10 degrees bank until accelerating to a minimum of 15 knots above flap retraction airspeed.

e. After completing departure maneuvers, maintain 250 KCAS or less below 10,000 feet. When passing through 10,000 feet, at a climb rate of approximately 500 ft/min, accelerate to the climb schedule of 270 KCAS. Maintain 270 KCAS until Mach 0.70 is reached and then hold Mach 0.70 to the cruise altitude.

OBSTACLE CLEARANCE CLIMBOUT TECHNIQUE.

If obstacle or terrain conditions exist which require obstacle clearance planning, compute performance in accordance with the appropriate criteria contained in Part 3 of T.O. 1C-5A-1-1. Under these conditions, the landing gear should be retracted in accordance with normal procedures and the obstacle clearance climb flown at either V_{MCO} + 10 knots or the pitch attitude commanded by the go-around computer. The obstacle clearance climb should be continued using the Take-Off Inflight EPR setting until reaching flap retraction altitude. For an obstacle clearance climb, flap retraction altitude is variable and is determined from Part 3 of T.O. 1C-5A-1-1. Upon reaching flap retract altitude, maintain a pitch attitude which will result in level flight or a positive rate of climb, accelerate to flap retraction airspeed and retract the flaps. Accelerate to climb speed utilizing a climb rate of approximately 500 ft/min and set climb power. In the event the 5 minute limit on TRT power is reached prior to achieving climb speed, military rated power should be set at that time and the obstacle clearance climb continued as described above. If an engine fails at any time prior to clearing the obstacle, follow the three engine procedures contained in Section III.

AFTER TAKE-OFF CLIMB.

Do not call for this checklist until the flaps have been retracted and other cockpit duties will not interfere with accomplishment. Items on this checklist may be accomplished as directed by the pilot and the checklist used as a cleanup reference.

After becoming airborne the flight engineer shall reset the EPR command marker to Take-Off Inflight EPR setting (as computed in T.O. 1C-5A-1-1) to assure that the minimum rate of climb will be achieved in case of loss of an engine. In the event of loss of an engine the pilot shall advance the throttles to this EPR as a minimum but they may be advanced further not to exceed limit TIT.

When the pilot calls "CLIMB POWER" the flight engineer will manually slew the EPR command bar to CLIMB POWER.

Note

When passing through 5,000 feet AGL, turn off the radar altimeters.

PILOTS

1. Landing Gear - UP

   Check that the gear position indicators indicate UP and that the light in the gear lever is off.

CAUTION

If any main landing gear indicates intermediate with the gear lever down and the landing gear position indicator shows zero degrees, do not place the gear lever in the UP position.

Note

On 68304, 68307, 70167, 70168, and 70170 thru 00460 not modified by T.O. 1345, with landing gear lever up, the kneeled, in-transit and asymmetry lights may come on; however, this does not indicate a malfunction of the system. The lights should go out when the landing gear lever is moved to the DOWN position.

If a main landing gear fails to retract and remains in a green wheels position, the following procedures may be used prior to inflight troubleshooting:

a. Landing Gear Lever - DN

b. Crosswind Reset Switch - RESET (2 OR 3 SECONDS)

c. Landing Gear Lever - UP

NOTE

If time permits, prior to retracting a landing gear by any other means than normal, the malfunction should be corrected by using the Inflight Troubleshooting of Landing Gear Extension and Retraction System in Section I.

FLIGHT ENGINEER

1. Air Cond Master Switch - LEFT/RIGHT/AS REQUIRED
   Cycling each operable air conditioning system to off then back on, releases the holding relay for the cooling air exit door.
2. Pressurization - CHECKED
3. Floor Heat - ON
4. Fuel Panel - SET
5. EMAC EPR Switch - AS REQUIRED
6. Anti-Icing - CHECKED/OFF/AUTO

   a. Engine Anti-Ice Switches - ON

Place the Engine Anti-Ice switches to ON and check that the engine anti-ice on lights come on.

   b. Reg Fail Switch - TEST

Place the Reg Fail switch to TEST and check that all the eng pri reg fail and nac reg fail lights come on.

   c. Engine Anti-Ice Switches - OFF

   d. Ice Detector Switch - AUTO

7. PTUs - OFF
8. Sys No. 1 and No. 4 Hydraulic Boost Pumps - OFF

SCANNER

1. Crew Door Mechanical Lock - INSTALLED

   On 70168, 00449 and up and airplanes modified by T.O. 1476, after becoming airborne, the scanner will install the mechanical lock on the door lock actuator.

Note

If flight is to be conducted in the local area/traffic pattern, the mechanical lock need not be installed.

2. Scanner's Report - SCAN OKAY

The scanner will visually check that the flaps are up and the slats are retracted. He will then make a walk-around check of the airplane interior, scanning the engines, load, and equipment. If no discrepancies exist he will report "SCAN OKAY," normally without interphone, to the flight engineer upon returning to the flight station. If a discrepancy exists which warrants immediate interphone contact with the flight station, the scanner will report that discrepancy to the pilot.

PILOTS	FLIGHT ENGINEER	SCANNER

2. Rudder Lim Switch - "AUTO" (CP)

3. Flaps and Slats - "UP AND RETRACTED" (CP)

   Check the flap handle and the flap and slat indicators for proper position.

4. Landing, Taxi, and Leading Edge Lights - OFF AND RETRACTED

5. LDCS - "SET" (CP) (LDCS INSTALLED)

   On 00461 and up and airplanes modified by T.O. 1334, trim the ailerons to indicate a 6-degree wing down trim position as follows:

   a. LDCS Arming Switch - ARM

   b. LDCS Switch - UP RIG

   Place and hold the LDCS switch to the UP RIG position until the aileron trim indicators read 6 degrees L WING DN and R WING DN (Aligned with index marks).

   c. LDCS Arming Switch - OFF

   d. Ailerons - TRIMMED

   Normal aileron trim may have to be applied to produce a wings level (hands off) attitude.

   Note

   When climbing through 20,000 feet, downrig the ailerons to indicate a 0-degree trim position if turbulence (light turbulence or greater as defined in Section V of this manual) is not encountered.

6. Seat Belt and No Smoking Lights - "AS REQUIRED" (CP)

   Normally, both the seat belt and no smoking lights will be turned off at this time; however, at the pilot's discretion, either may be left on depending on existing conditions.

PILOTS	FLIGHT ENGINEER	SCANNER
7. Engineer's Report - "CHECK COMPLETED" (E)	9. Engineer's Report - "CHECK COMPLETED" (E)	
8. After Take-off Climb Check - "COMPLETED" (CP)		

CRUISE.

Upon reaching cruise altitude the pilot shall accelerate to cruise speed, and at his option, set cruise power or direct the copilot to set cruise power. The pilot and copilot should set their respective command markers to cruise altitude and MACH/KCAS for desired cruise MACH. The flight engineer shall compute the cruise data and establish cruise fuel management. The flight engineer shall also provide the desired KCAS to the pilot prior to reaching cruise altitude.

PILOTS

1. Seat Belt Light - "AS REQUIRED" (CP)
2. Altimeters - "STATE SETTING" (CP,P,N)
3. Radar Altimeters - "AS REQUIRED" (CP,P)

   Turn off the radar altimeters if cruising above 5,000 feet.
4. Continuous Ignition - "AS REQUIRED" (P)

   The continuous ignition system will normally be turned off at this time. However, it shall be on for flight in known or anticipated icing conditions or in moderate or severe turbulence.
5. LDCS - "AS REQUIRED" (CP) (LDCS INSTALLED)

   On 00461 and up and airplanes modified by T.O. 1334, when flying above 20,000 feet, ensure that the ailerons have been downrigged to the 0-degree trim position if turbulence is not encountered. When flying in an area of turbulence (light turbulence or greater as defined in Section V of this manual), uprig the ailerons to indicate a 6-degree wing down trim position.

   Note

   Airplane performance in the aileron uprig configuration (6-degree wingdown position) will be degraded as described in T.O. 1C-5A-1-1.
6. Cruise Check - "COMPLETED" (CP)

FLIGHT ENGINEER

1. MADAR Engine Vibration Quick Checks - ACCOMPLISHED (MADAR AVAILABLE)

   On 68306, 70169, 00447 and up and airplanes modified by T.O. 1450, once each flight and routinely if desired, accomplish the Quick Check under MADAR Engine Vibration Analysis in Section I.

ENROUTE DESCENT.

Enroute descent and descent to initial penetration altitude is accomplished by retarding throttles with the landing gear up, flaps up and thrust reversers retracted and descending at speeds within the speed envelope limit. Below 10,000 feet maintain 250 knots or less.

Note

On 00461 and up and airplanes modified by T.O. 1334, when beginning the descent, uprig the ailerons to indicate a 6-degree wingdown trim position.

RAPID DESCENT.

Rapid descent is accomplished by retarding all throttles with the landing gear up, flaps retracted, the two inboard engines in reverse idle thrust and descend at limit airspeed, not to exceed 15 degrees nose down pitch.

Note

On 00461 and up and airplanes modified by T.O. 1334, when beginning the descent, uprig the ailerons to indicate a 6-degree wingdown trim position.

HOLDING.

High altitude holding will be conducted in a clean configuration at recommended endurance speed.

Low altitude holding will normally be conducted in a clean configuration at recommended endurance speed. However, when fuel is not critical, holding may be conducted with the gear down, flaps at 40% and at an airspeed of: approach speed plus 30 knots.

At the recommended endurance speed, the angle-of-attack is approximately constant for all gross weights and altitudes (nominal 3 degrees on the VSFI). The holding may be flown at the angle-of-attack initially observed for the recommended endurance speed.

Due to the relatively high airspeeds involved at heavier gross weights, the maximum FAA and ICAO holding pattern airspeeds may be exceeded. Notify the appropriate agency and obtain clearance to hold at the increased airspeed.

PENETRATIONS.

Refer to figures 2-7 through 2-9 for a typical penetration.

Prior to starting a penetration, complete the Descent checklist.

Penetration Procedures are as follows:

a. After passing the initial approach fix (IAF), retard throttles, extend the landing gear, accomplish the before landing checklist, and descend at 225 knots at weights below 560,000 lbs and 250 knots at weights above 560,000 lbs. Use inboard thrust reversers as necessary to control the rate of descent to comply with the published penetration procedure.

b. Retract the thrust reversers (if extended) and start level-off at approximately 1,000 feet above the published minimum penetration altitude. Extend the flaps to the approach setting (40 percent) and allow the airspeed to decrease to approach plus 20 knots.

WARNING

With the flaps in the up position, the minimum airspeed shall be approach plus 50 KCAS. Adhere to flap/slat airspeed restrictions prior to lowering the flaps.

DESCENT.

The copilot should obtain the station altimeter, weather, winds, temperature, pressure altitude and runway conditions from Metro, tower, or the controlling agency prior to arrival over the destination. The flight engineer shall compute the landing data based upon the anticipated landing weight and the weather information.

Forecast data may be used to compute landing data; however, prior to landing this data shall be confirmed and TOLD card updated as required. The crew briefing may be completed prior to descent check.

Note

Should an engine fail to accelerate properly from idle following unequal power operation, closing the pylon bleed valve should allow the engine to accelerate normally. After the engine has accelerated to the required speed, open the pylon bleed valve.

TYPICAL HIGH ALTITUDE PENETRATION AND APPROACH FOUR AND THREE ENGINE CONFIGURATION

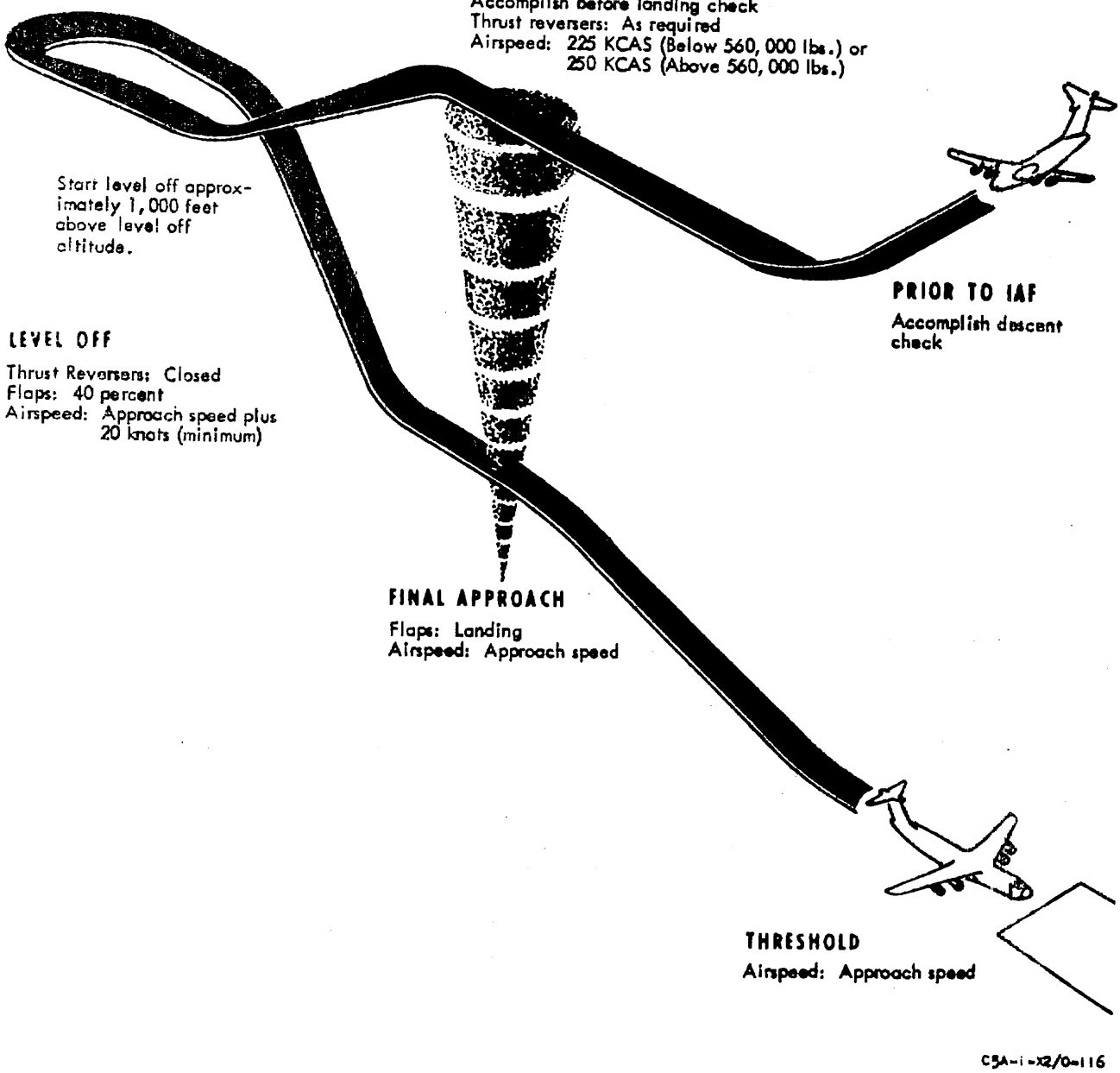

Figure 2-7.

TYPICAL LOW ALTITUDE APPROACH FOUR AND THREE ENGINE CONFIGURATION

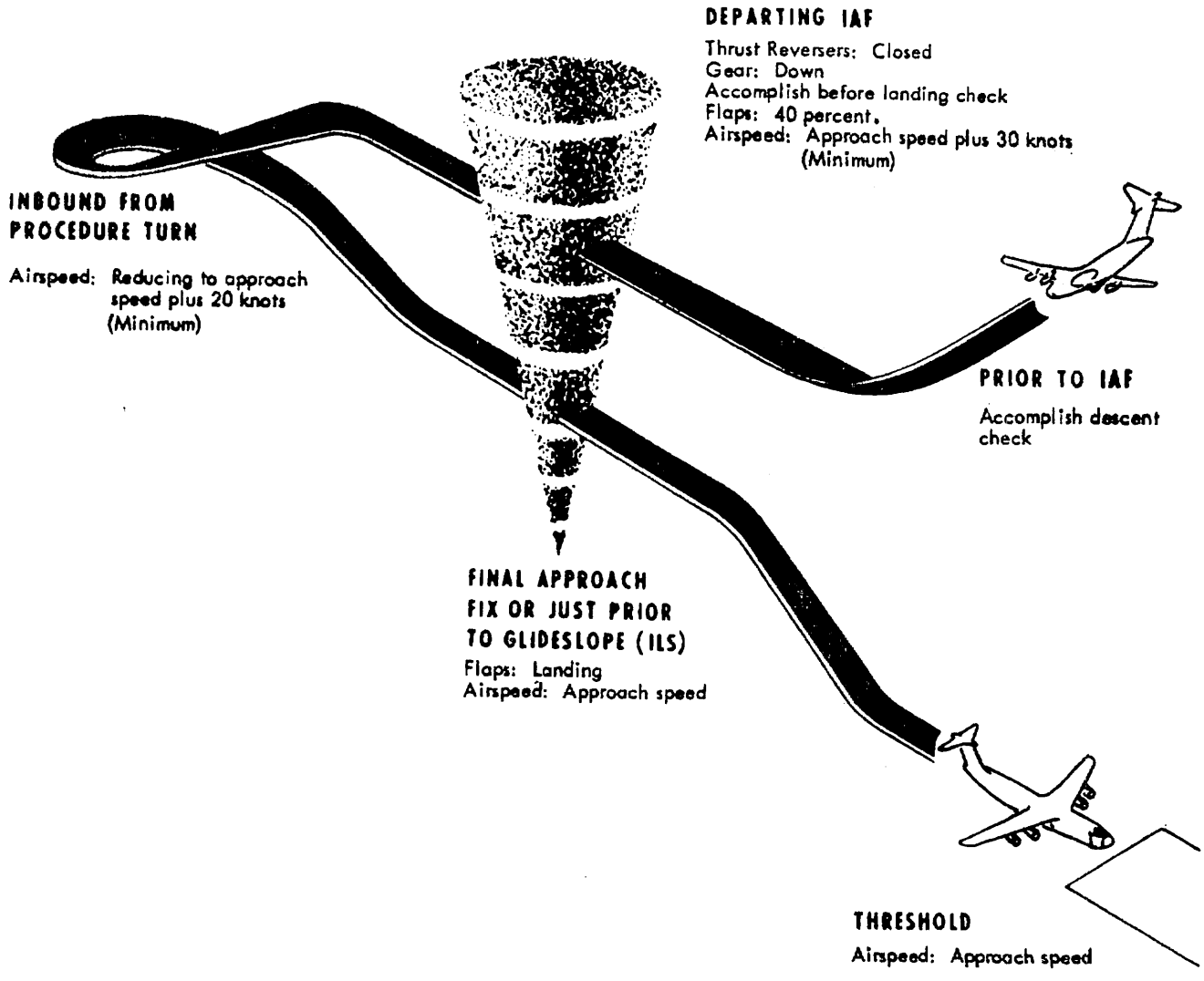

C5A-1-X1/D-117

Figure 2-8.

TYPICAL HIGH ALTITUDE PENETRATION AND APPROACH TWO ENGINE CONFIGURATION

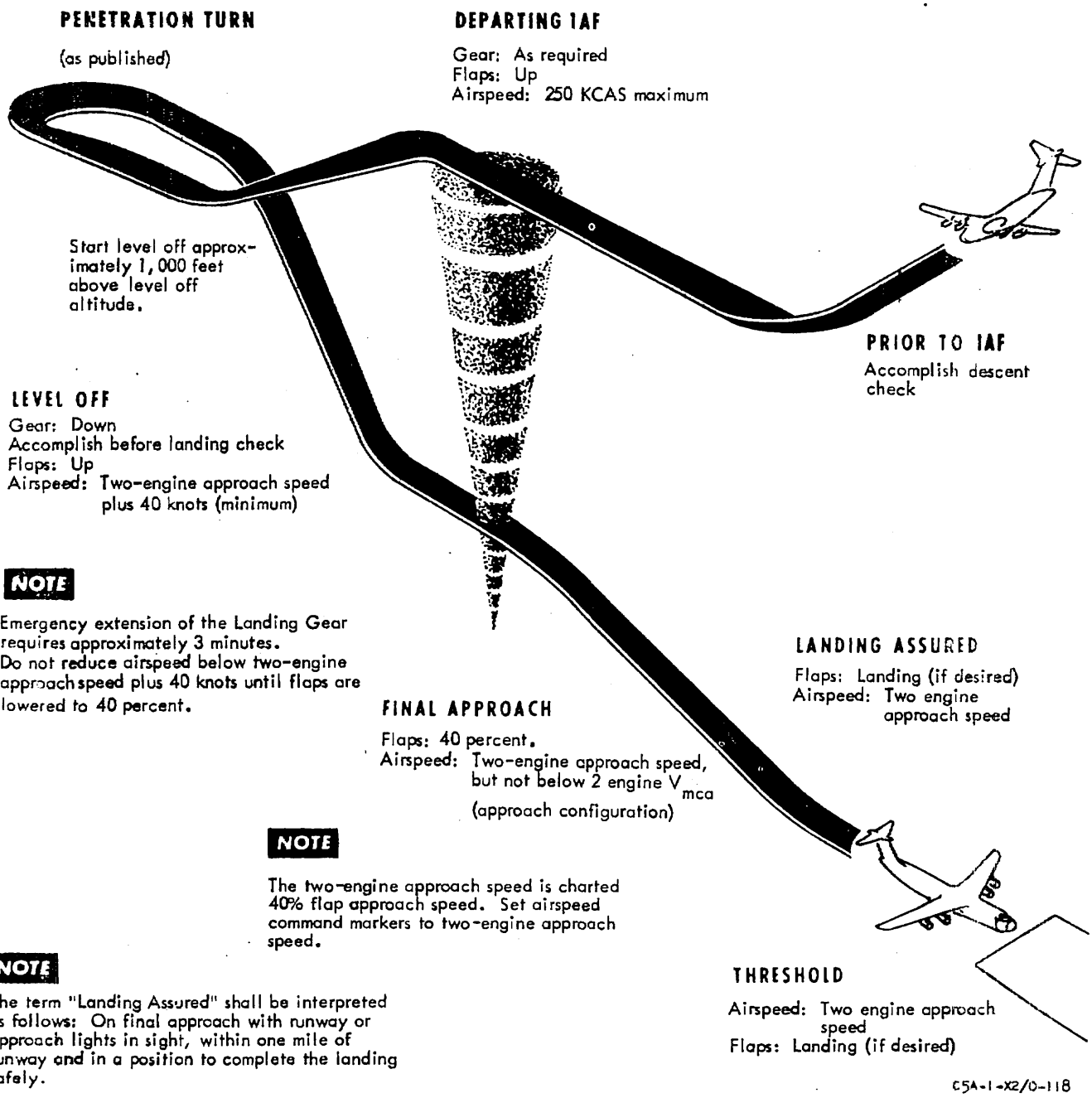

Figure 2-9.

PILOTS

1. Crew Briefing - "COMPLETED" (P)

   The pilot briefing should include the following as applicable:

   a. Type of approach

   b. Decision Height (DH)/Minimum Descent Altitude (MDA)

   c. Missed approach intentions

   d. Navigation and communication radios

   e. Significant terrain features

   f. Command markers

   g. Radar altimeters

   h. Alert compartments to prepare for descent.

If icing conditions are expected during descent, or approach, the pilot shall brief on the use of anti-ice systems. For instrument approaches, the pilot flying the approach shall set his command altitude marker on Decision Height (DH)/Minimum Descent Altitude (MDA) for the type approach being accomplished. The pilot monitoring the approach shall set his command altitude marker on DH/MDA plus 100 feet. The airspeed command markers shall be set to approach speed prior to turning onto final approach.

1A. LDCS - "SET" (CP) (LDCS INSTALLED)

On 00461 and up and airplanes modified by T.O. 1334, trim the ailerons to indicate a 6-degree wingdown trim position as follows:

a. LDCS Arming Switch - ARM

b. LDCS Switch - UPRIG

Place and hold the LDCS switch to the UPRIG position until the aileron trim indicators read 6-degrees L WING DN and R WING DN (aligned with index marks).

FLIGHT ENGINEER

1. Landing Altitude Selector - FIELD ELEVATION

2. BARO Correction Knob - SET

3. Pressurization Mode Selector Switch - LAND

4. Cabin Rate Control - SET

5. Flight Report - PRINTED (1000021) Accomplish if engines are going to be shut down after landing.

SCANNER

PILOTS	FLIGHT ENGINEER	SCANNER

c. LDCS Arming Switch - OFF

d. Ailerons - TRIMMED

Normal aileron trim may have to be applied to produce a wing level (hands-off) attitude.

2. Radios - "CHECKED AND SET" (CP)

3. Thrust Reverse Limiter - "SET" (CP)

4. Continuous Ignition - "ON" (P)

5. Seat Belts and Shoulder Harnesses - "ADJUSTED" (CP)

Copilot shall ensure that both pilots have seat belts and shoulder harnesses adjusted.

6. Seat Belt Light - "AS REQUIRED" (CP)

Normally, the seat belt light will be left off at this time; however, at the pilot's discretion, it may be turned on depending on existing conditions.

7. ADS Panel Switches - "SAFE" (CP)

The copilot shall check paratroop Air Deflector, and Aft and Fwd Cargo Door switches in SAFE position.

8. Altimeters - "STATE SETTING" (CP,P,N)

The copilot will set the local station altimeter setting (QNH) when received. The pilot and navigator will remain on 29.92 (if above the transition level) until clearance to descend below the transition level is received and started. The copilot will advise the pilot and navigator of the proper altimeter setting and receive acknowledgement of the setting prior to descending through the transition level.

PILOTS | FLIGHT ENGINEER | SCANNER

WARNING

The altimeters shall be set to station pressure (QNH) prior to or when descending through transition level.

When cleared for continuous descent to an altitude below the transition level, the altimeters will be set to station pressure (QNH) upon starting descent.

9. Radar Altimeters - "ON AND SET" (CP,P)

Note

Intermittent flags or pointer drivedown may occur above the functional range of 5,000 feet. Consider the equipment discrepant only if problems are experienced at 5,000 feet or below. Below 5,000 feet, the pointer should remain masked until reaching the operational range.

PILOTS	FLIGHT ENGINEER	SCANNER
10. Navigator's Report - "CHECK COMPLETED" (N)		
11. Engineer's Report - "CHECK COMPLETED" (E)	6. Engineer's Report - "CHECKED COMPLETED" (E)	
12. Descent Check - "COMPLETED" (CP)		

TERRAIN FOLLOWING/TERRAIN AVOIDANCE (TF/TA).

MISSION REQUIREMENTS-AUTOMATIC TF/TA.

The following equipment shall be on and functioning properly before a fully automatic TF/TA mission can be flown:

(1) INERTIAL DOPPLER NAVIGATION EQUIPMENT (IDNE). The IDNE shall be aligned and in a navigational mode. TF/TA destination points (DPs) shall be entered. Track Steer, Destination Steer and Heading Steer modes may be used as desired.

(2) MULTI-MODE RADAR (MMR). The MMR shall be on and functionally tested. The X-band radar is the primary radar for TF/TA.

(3) FLIGHT DIRECTOR SYSTEM (FDS). Both flight director systems shall be used.

(4) AUTOMATIC FLIGHT CONTROL SYSTEM (AFCS). The AFCS shall be functioning properly with the vertical and horizontal navigation modes available.

(5) AUTOMATIC THROTTLE SYSTEM (ATS). The ATS shall be functioning properly with the IAS Hold/Adj and/or Alpha Hold modes available.

The following equipment may be utilized to augment on automatic TF/TA mission.

(1) ANGLE OF ATTACK (AOA). The AOA may be used as an alternate vertical flight vector source for the MMR.

(2) DOPPLER. The Doppler may be used as an alternate source for drift angle and ground speed.

MISSION REQUIREMENTS-MANUAL TF/TA.

The following equipment shall be on and functioning properly before a manual TF/TA mission can be flown:

(1) INERTIAL DOPPLER NAVIGATION EQUIPMENT (IDNE). The IDNE shall be aligned and in a navigational mode. TF/TA destination points (DP's) shall be entered. Track steer, destination steer and heading steer modes may be used, as desired.

(2) MULTI-MODE RADAR (MMR). The MMR shall be on and functionally tested. The X-band radar is the primary radar for TF/TA.

(3) FLIGHT DIRECTOR SYSTEMS (FDS). Both flight director systems shall be used.

(4) RADAR ALTIMETERS. Both radar altimeters shall be functioning properly.

The following equipment may be utilized to augment a manual TF/TA mission:

(1) AUTOMATIC THROTTLE SYSTEM (ATS). If used, the ATS shall be functioning properly. Use of IAS Hold/Adj is recommended.

(2) ANGLE OF ATTACK (AOA). The AOA may be used as an alternate vertical flight vector source for the MMR. Use of the AOA will permit larger pitch excursions in turbulent air than will use of the vertical flight vector of the IMU.

(3) DOPPLER. The Doppler may be used as an alternate source for drift angle and ground speed.

Only those items marked with a pound sign (#) are required for a manual TF/TA mission.

TF/TA DESCENT.

Accomplish the TF/TA Descent checklist at altitude before starting the initial descent (See figure 2-14). The navigator and flight engineer will accomplish the applicable steps of their descent checklist.

#1. Crew Briefing - "COMPLETED" (P)

#2. ADS Panel Switches - "SAFE" (CP)

#3. Angle of Attack - "CHECKED" (CP, P)

The pilots will ensure that VSFI angle of attack warning flags are out of view and that nominal angle of attack tape information is being displayed.

#4. MMR - "SET AS REQUIRED" (CP, P)

Transfer control to the pilot's panel and optimize scope settings.

WARNING

Verify with the navigator that the MMR function switch is in the OPR position. Should the function switch be in the TEST position, no flight warning will be available to the pilot.

5. Autopilot - "AS REQUIRED" (P)

If the autopilot is to be used, it will be engaged.

6. ATS - "AS REQUIRED" (P)

If the ATS is to be used, it will be engaged.

#7. Radar Altimeters - "TESTED AND SET TO 2,000 FEET" (CP, P)

#8. Continuous Ignition - "ON" (P)

#9. Seat Belt Light - "AS REQUIRED" (CP)

#10. Altimeters - "SET" (CP, P, N)

Set Altimeters to barometric setting of nearest available station.

#11. Navigator's Report - "CHECK COMPLETED" (N)

#12. Engineer's Report - "CHECK COMPLETED" (E)

#13. TF/TA Descent Check - "COMPLETED" (CP)

BEFORE TF/TA.

Accomplish the Before TF/TA checklist during descent to the final TF/TA flight path (See figure 2-14).

#1. Level-Off at 2,000 feet AGL - "ACCOMPLISHED" (P)

Note

Reduce vertical velocity for the last 1,000 feet of descent.

#2. Radar Altimeters - "CROSS-CHECKED" (CP, P)

Cross-check pilot's and copilot's radar altitudes. Observe pilot's and copilot's barometric altitudes.

#3. MMR - "CHECKED AND SET" (CP, P)

a. TA/TF Range Sel pushbutton - DEPRESSED

While depressing the pushbutton, note that the PPI 10-mile range light goes off, the 5-mile range light comes on and the ridge lines expand slightly.

b. Ride Selector Switch - SET AT 3

c. Clearance Plane - SET AT 1,400 FEET

#4. Nav Select Panel - "RADAR" (CP, P)

The pilot will select RADAR. The copilot will select the mode required.

5. AFCS - "SET" (P)

Note

During TF/TA with the AFCS engaged, a malfunction (Fail light) of the MMR will cause a full fly-up command.

6. ATS - "SET" (P)

a. IAS Hold/Adj Pushbutton - DEPRESSED

The throttles will advance or retard until the commanded IAS has been attained.

CAUTION

Care must be taken to prevent exceeding airspeed limitations on fly-down commands when ATS is engaged.

Note

The use of Alpha Hold is not recommended.

b. Desired Airspeed - SET

Slew the disired airspeed. The recommended airspeed in the IAS Hold/Adj mode is 240 KCAS.

#7. Radar Altimeters - "SET AT 1,400 FEET" (CP, P)

#8. Descend to 1,400 feet AGL - "ACCOMPLISHED" (P)

Descend to 1,400 feet AGL at 500 FPM maximum. Observe the PPI symbology ridge lines and target presentation as the descent approaches 1,400 feet AGL. The ADI pitch steering bar should provide a "level-flight" command approaching 1,400 feet AGL, assuming no obstacle requires a climb command.

#9. Radar Altimeters - "SET" (CP, P)

Set radar altimeters to the briefed clearance plane altitude (800 feet minimum).

#10. Ground Clearance Plane - "SET" (CP, P)

Set ground clearance plane to briefed altitude (800 feet minimum).

PPI targets should disappear, symbology should show fly down and ridge lines should not show a target. The ADI pitch steering bar should provide a "fly-down" command.

#11. Descend to Briefed Clearance Plane Altitude - "ACCOMPLISHED" (P)

Descend to the briefed clearance plane altitude at 500 FPM maximum.

#12. Obstacle Warning - "CHECKED" (P)

Rotate the Ride select switch to 3 or SOFT and set the ground clearance plane to maximum (approximately 1500 feet) while maintaining the same radar altitude. At radar altitudes of 1000 feet or below, the obstacle warning horn should sound and the light should come on. If they do not, descend slowly to 800 feet AGL. If the obstacle warning horn does not sound and the warning light does not come on, climb immediately and abort the TF/TA mission.

#13. Navigator's Report - "COMPLETED" (N)

#14. Engineer's Report - "COMPLETED" (E)

#15. Before TF/TA Check - "COMPLETED" (CP)

INSTRUMENT APPROACHES.

The airplane is equipped to fly all precision and non-precision type instrument approaches. No unusual flight characteristics exist during instrument flight. However, bank angles shall be limited to 30 degrees for ease in controlling the airplane. Airplane configuration and airspeeds should be established in accordance with the procedures and typical instrument approach illustrations contained in this section (figures 2-7 through 2-13). Instrument flight procedures will be accomplished in accordance with current Air Force instrument flying manuals. Approach procedures peculiar to equipment installed in this airplane are detailed below:

WARNING

On airplanes not modified by T.O. 1376, the pilot and copilot shall not select repeat mode on the pilot's or copilot's radar control panel during ILS approaches. To do so could cause erroneous glideslope deviation and pitch command displays.

CIRCLING APPROACH.

If a circling approach is to be made, set flaps at 40 percent and maintain an airspeed of approach speed plus 20 knots until the final turn. During the turn to the final approach, set the flaps to landing and reduce airspeed to approach speed.

COUPLED ILS APPROACH.

The procedure for a coupled ILS approach is similar to the procedure for an autoland approach except the Autoland pushbutton is not depressed. The automatic flare, alignment and rollout will not be available and the landing shall be performed manually. The autopilot shall be disengaged at decision height (DH).

The following allows the autopilot to be coupled to the ILS and are different from the autoland approach:

a. A coupled ILS may be flown if only one VHF nav receiver is operative and its associated radar altimeter is operating; however, the ILS approach bullseye will not rotate into view and the flight director pitch steering command is not desensitized.

b. A coupled ILS may be flown with only the pilot's HSI course set to the published inbound ILS course.

c. During a coupled ILS approach, when the autoland mode is not selected, the monitoring system is not active.

AUTO LAND APPROACH.

During subsequent patterns and approaches to the same facility, only the asterisk items of this checklist need be accomplished.

Before Entering Pattern.

Before entering the autoland approach pattern, accomplish the following:

1. Descent Check - "COMPLETED" (CP)

2. Crew Briefing - "COMPLETED" (P)

3. Altimeters - "STATE SETTING" (CP, P, N)

4. Landing/Taxi Lights - AS REQUIRED

5. No Smoking and Seat Belt Lights - "ON" (CP)

6. Crew Landing Report - "____READY" (N, E, LM, S)

Before Localizer Intercept.

In order to intercept the localizer, the following must be accomplished.

1. VHF Nav Radios - "SET" (CP, P)

The pilot and copilot will select the applicable ILS frequency on both VHF nav radios.

*2. HSI Heading and Course - "SET" (CP, P)

The pilot and copilot will set their respective HSI heading command markers as required, and published inbound course for ILS usage.

*3. Nav Select Panels - "VOR/ILS AND HDG" (CP, P)

The pilot will select VOR/ILS-1 and HDG.
The copilot will select VOR/ILS-2 and HDG.

*4. Autopilot - "SET" (P)

a. AFCS Master Power Pushbutton - DEPRESSED

The pilot will depress the AFCS Master Power pushbutton and observe that the on light comes on.

b. AFCS Pitch and Lateral Pushbuttons - DEPRESSED

The pilot will depress the AFCS Pitch and Lateral pushbuttons and observe that the on light in each pushbutton comes on. Pitch and roll CWS may be selected as desired. AFCS pitch and lateral function should be checked for normal operation.

c. AFCS Horiz Nav Pushbutton - DEPRESSED

The pilot will depress the AFCS Horiz Nav pushbutton and observe that the on light comes on, and that the airplane turns to the heading selected.

d. AFCS Alt Hold - AS REQUIRED

If required, the pilot will depress the AFCS Alt Hold pushbutton and observe that the on light comes on, and that the airplane maintains the selected altitude.

e. Pitch and Roll CWS - AS DESIRED

Note

The coupled CWS may be used to augment the autopilot inputs to improve the flight path as displayed to the pilot. It must be recognized that a slight force unintentionally applied to either control wheel, with CWS engaged, may deteriorate the autopilot performance and result in an unacceptable approach. It is recommended that, if CWS is utilized, the pilot monitor the approach as if it were a manual flight director approach and exert a constant effort to improve the display. Otherwise, CWS should not be engaged.

*5. Auto Throttles - "AS REQUIRED" (P)

If ATS is operative, the pilot will set throttle friction to OFF and depress the ATS pushbutton. The on light should come on. The pilot will select the desired ATS submode, if other than direct throttle is desired, and verify engagement by observing the associated indicator lights. IAS Hold/Adj is recommended.

Note

If either the pilot's or copilot's MMR Mode switch is in the SKE position, the speed deviation indicator will display SKE data or be masked by the speed deviation warning flag. To display raw deviation, rotate the MMR Mode switch to any other position.

6. Radar Altimeters - "ON, TESTED, SET" (CP, P)

The pilot and copilot will conduct an inflight test of their radar altimeters and set the altitude trip markers to DH.

*7. HSI Heading Marker - "SET" (P)

The pilot will set HSI heading command marker to localizer beam intercept heading.

8. LDCS - "SET" (CP) (LDCS INSTALLED)

On 00461 and up and airplanes modified by T.O. 1334, down rig the ailerons to indicate a 0-degree trim position.

*9. Flaps and Slats - "STATE SETTING" (CP)

*10. Rudder Lim Switch - "MIN Q" (CP)

*11. Nav Select Panels - "HDG DESELECTED" (CP, P)

The pilot and copilot will deselect the HDG buttons on both nav selector panels.

Note

It is recommended that the localizer intercept be performed at airspeeds of less than 170 KCAS to avoid large localizer overshoots.

After Localizer Capture and Before Glideslope Intercept.

*12. AFCS Vert Nav - "ON" (P)

The pilot will depress the AFCS Vert Nav pushbutton and observe that the on light comes on.

*13. Landing Gear - "DOWN AND ALIGNED" (CP)
"DOWN" (P)

*14. Landing Gear Crosswind Positioning - "SET___DEGREES___" (CP)

*15. Normal Brake Pressure - "CHECKED" (CP)

*16. HSI Course - "___DEGREES SET" (CP, P)

The pilot and copilot will set in the inbound ILS course (corrected for crosswind gear if necessary) on their respective HSI's.

Note

When crosswind gear is utilized for autoland, change the ILS course the same number of degrees as set on the crosswind gear control and in the same direction. For example: If the crosswind gear control knob is turned clockwise, then turn the ILS course knob clockwise.

*17. Before Landing/Traffic Pattern Check - "COMPLETED" (CP)

*18. HSI Heading Marker - "SET" (CP, P)

The pilot and copilot will set their HSI Heading marker on the upper lubber line.

At Glideslope Capture.

*19. Flaps - "LANDING" (CP)

The copilot will extend the flaps at the 1/4-dot fly-up vertical deviation indication or when the ILS approach bullseye comes into view.

*20. ATS - "SET AT APPROACH SPEED" (P)

The pilot will reduce airspeed to the approach speed. The pilot may select Alpha Hold when stable on glideslope at approach speed (approximately 7 degrees alpha).

*21. Auto Land Pushbutton - "DEPRESSED" (P)

When stabilized on the glideslope above 700 feet radar altitude, the pilot will depress the Autoland pushbutton and observe that the on light comes on.

*22. Autoland Lights - "AUTOLAND" (CP, P)

Illumination of the autoland lights indicates that the autopilot system monitoring is activated and that, in the event of a malfunction, the affected axis will disengage automatically, causing the auto caution and appropriate autopilot axis off lights to come on.

*23. Autoland Check - "COMPLETED" (CP)

During the remainder of the autoland approach, the following events should be monitored closely:

a. DH Light - ON

The pilots shall monitor when the amber outer ring (decision height) of the ADI ILS approach bullseye comes on.

b. Flare Light - ON

The pilots shall monitor when the green flare light of the ADI ILS approach bullseye comes on. At 50 feet, the glideslope signal is desensitized to zero and replaced by a flare command.

c. Throttle Movement - CHECKED

After the flare light comes on and if the ATS is engaged, the pilot shall check that the throttles begin to retard towards idle. The pilot shall retard the throttles slowly if ATS is not engaged.

d. Runway Alignment - CHECKED

At 20 feet, the autopilot produces a rudder command to turn the airplane to the course set in the HSI. This will align the airplane (landing gear if crosswind is set) with the runway.

e. Touchdown and Rollout - CHECKED

After touchdown, the autopilot lowers the nose landing gear, to the runway at a controlled rate. After the nose gear is on the runway, the autopilot utilizing rudder commands maintains directional control of the airplane to the center of the localizer beam. The pilot will slow the airplane to taxi speed using normal techniques, then disengage the AFCS.

AIRBORNE RADAR APPROACH (ARA).

A typical ARA pattern is found in figure 2-13. During subsequent patterns and approaches, only the asterisk items of this checklist need be accomplished.

Before Entering Pattern.

Before entering the ARA pattern, accomplish the following:

1. Descent Check - "COMPLETED" (CP)

The normal Descent Checklist will be accomplished.

2. Crew Briefing - "COMPLETED (P)

3. Altimeters - "STATE SETTING" (CP, P, N)

4. Landing/Taxi Lights - AS REQUIRED

5. No Smoking and Seat Belt Lights - "ON" (CP)

6. Crew Landing Report - "___READY" (N, E, LM, S)

Entering Pattern

Before an ARA can be started, the following must be accomplished:

1. MMR Control Panel - "REPEAT" (CP, P)

*2. IDNE - "SET" (N)

*3. MMR - "SET" (N)

*4. HSI Heading Marker - "SET" (CP, P)

Set heading marker to compass heading of airplane.

*5. Nav Select Panels - "PRI OR AUX, HDG" (CP, P)

Select Pri Compt (or Aux Compt, if in control) if track steer is desired. Otherwise, select any nav function except Radar.

Select Hdg for setting up turn to intercept heading when cross track is greater than 5 N.M., as advised by the navigator, using the HSI Heading Set knob. (See point B, figure 2-13.)

*6. AFCS - "SET" (P)

Note

This step is accomplished only for an automatic approach and is not to be used for a manual (flight director) approach.

a. Pitch and Lateral Pushbuttons - DEPRESSED

Depress the Pitch and Lateral pushbuttons and observe that the on lights come on. CWS may be engaged if desired.

CAUTION

The pilot's radar altimeter must be functioning properly to provide pitch desensitization. Do not perform an automatic approach if the pilot's radar altimeter is inoperative or inaccurate.

b. Horiz Nav - ON

c. Alt Hold - ON

Engage the altitude hold mode at the desired approach altitude.

d. ATS (IAS Hold) - AS REQUIRED

*7. MMR Cursors - "SET" (N)

*8. Crosstrack - "STATE DISTANCE" (N)

*9. Nav Select Panels - "HDG DESELECTED" (CP, P)

Upon reaching the intercept heading (as advised by the navigator) and a crosstrack of approximately 5 N.M., deselect HDG, or make the intercept using the HDG mode until on or close to zero cross track. (See point C, figure 2-13.)

The ADI hdg light will remain on if crosstrack is greater than 5 N.M. At 5N.M. crosstrack, observe that the ADI HDG light goes off and that a 45-degree intercept commanded by the FDS and AFCS.

When crosstrack deviation is 0.1 N.M. or less, the HSI scaling becomes 2 dots (0.3 N.M.). (See point D, figure 2-13.)

At approximately 17 N.M. inbound (see point E, figure 2-13), continue approach procedure.

*10. MMR Radar Approach - "RADAR APPROACH READY" (N)

*11. Nav Select Panels - "RADAR" (CP, P)

The copilot may monitor the ARA by selecting RADAR on his nav select panel or monitor the ILS, if available, by selecting VOR/ILS-2.

*12. Landing Gear - "DOWN AND ALIGNED" (CP)
"DOWN" (P)

*13. Landing Gear Crosswind Positioning - "SET___DEGREES___" (CP)

*14. Normal Brake Pressure - "CHECKED" (CP)

*15. LDCS - "SET" (CP) (LDCS INSTALLED)

On 00461 and up and airplanes modified by T.O. 1334, down rig the ailerons to indicate a 0-degree trim position.

*16. Flaps and Slats - "STATE SETTING" (CP)

*17. Rudder Lim Switch - "MIN Q" (CP)

*18. Before Landing/Traffic Pattern Check - "COMPLETED" (CP)

*19. Glideslope Flag - "OUT OF VIEW" (CP, P)

Note that the glideslope flag disappears at approximately 10 N.M. to go. If on track, observe that the bullseye comes into view at glideslope intercept. The glideslope intercept range is dependent on the glideslope angle selected. (See Point F, figure 2-13.)

*20. Vert Nav - "ON" (P)

After the glideslope flag disappears, and if an automatic approach is planned, select VERT NAV and check that the on light comes on. (See point G, figure 2-13.)

*21. Flaps - "LANDING" (CP)

Set the flaps to LANDING at 1/3 dot fly-up deviation, or when the flight director fly-down command indicates a radar approach capture.

*22. ATS - "SET" (P)

The pilot, using IAS Hold/Adj, will reduce airspeed to approach speed.

When established on glideslope, select ATS to Alpha Hold, if desired and if in calm air.

*23. ARA Checklist - "COMPLETED" (CP)

Alternate Approach Capture Procedure.

a. If range is 17 N.M. or less and a capture is desired, the navigator must pickle in RA mode, then advise the pilot to select RADAR on the nav selector panel.

b. The HDG button should be deselected upon reaching intercept heading.

c. The ADI HDG light will go out at approximately 1.5 N.M. cross track deviation (1-1/2 dots) and a capture will be commanded.

d. When on track, conditions will be as previously described for remainder of approach.

TYPICAL LOW ALTITUDE APPROACH TWO ENGINE CONFIGURATION

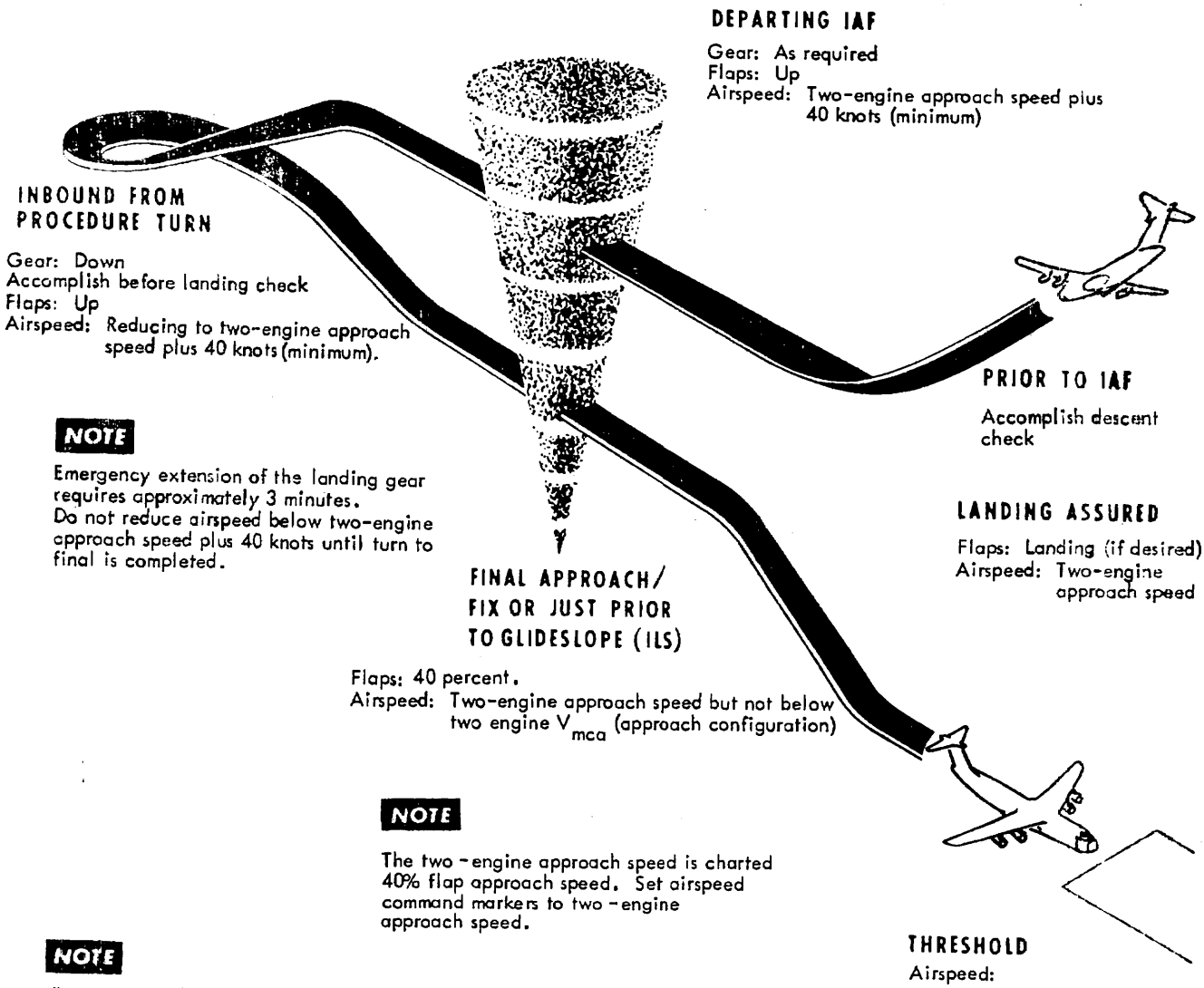

C5A-1-XI/0-119

Figure 2-10.

TYPICAL RADAR APPROACH FOUR AND THREE ENGINE CONFIGURATION

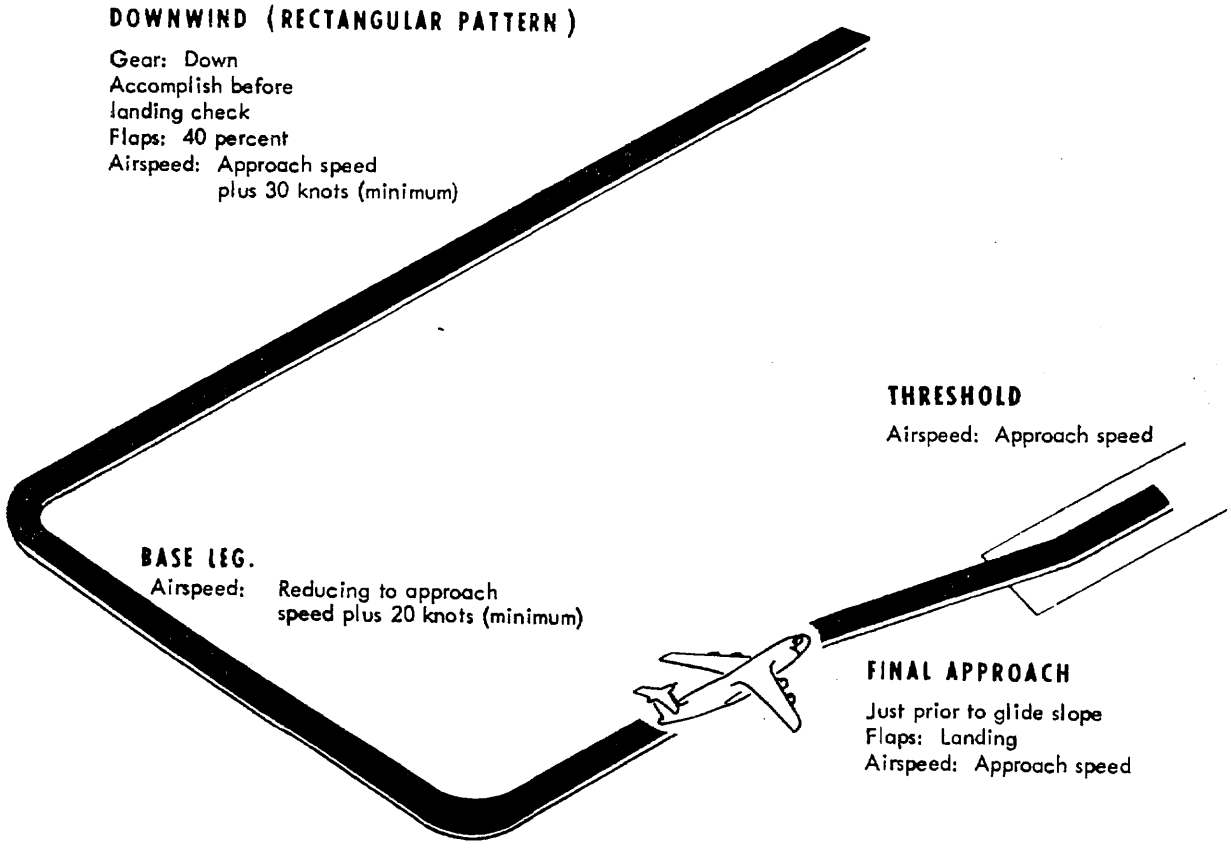

C5A-1-X1/0-120

Figure 2-11.

TYPICAL RADAR APPROACH TWO ENGINE CONFIGURATION

NOTE

The bank angle shall not exceed 30 degrees in a turn.

DOWNWIND (RECTANGULAR PATTERN)

Gear: Up
Flaps: Up
Airspeed: Reducing to two-engine approach speed plus 40 knots (minimum)

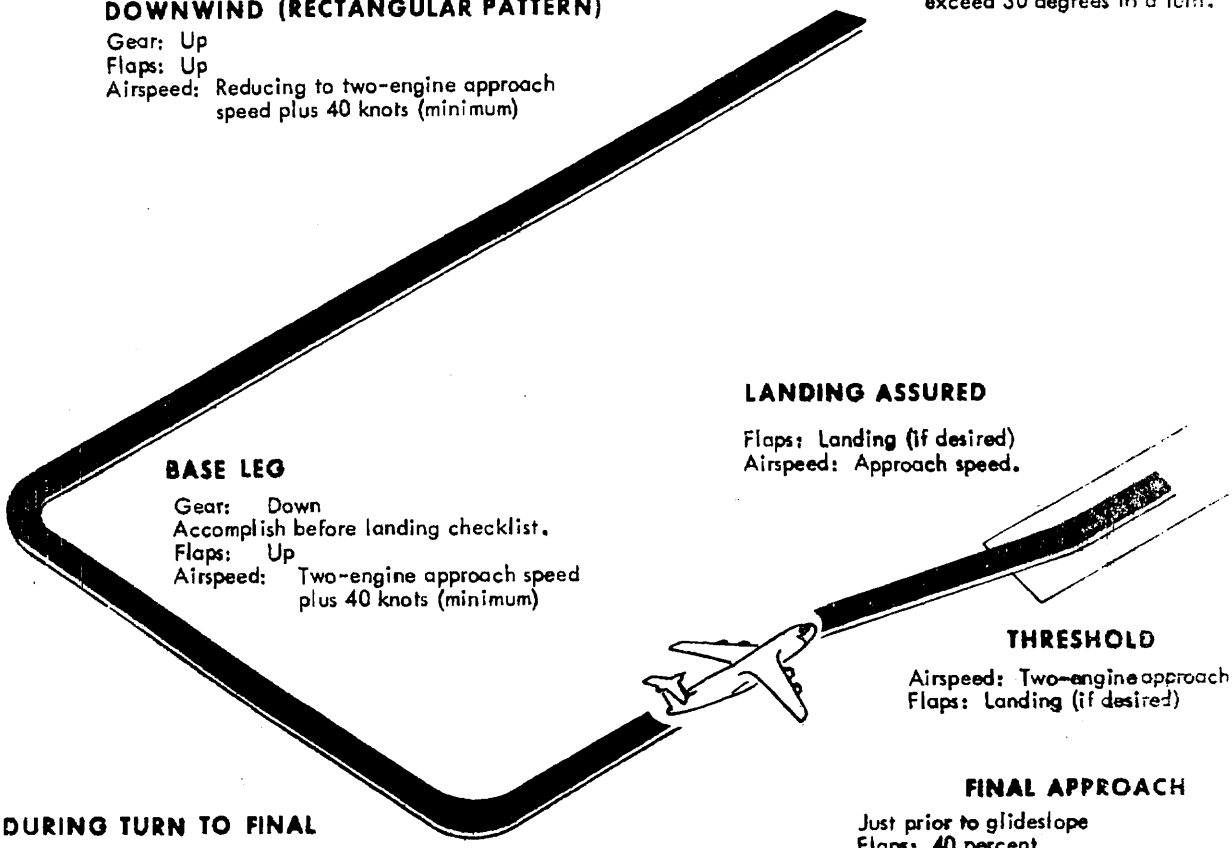

BASE LEG

Gear: Down
Accomplish before landing checklist.
Flaps: Up
Airspeed: Two-engine approach speed plus 40 knots (minimum)

LANDING ASSURED

Flaps: Landing (if desired)
Airspeed: Approach speed.

THRESHOLD

Airspeed: Two-engine approach speed
Flaps: Landing (if desired)

DURING TURN TO FINAL

Airspeed: Two-engine approach speed plus 40 knots (minimum).

FINAL APPROACH

Just prior to glideslope
Flaps: 40 percent
Airspeed: Two-engine approach speed, but not below two engine V_{mca} (approach configuration)

NOTE

Emergency extension of the landing gear requires approximately 3 minutes. Do not slow below two-engine approach speed plus 40 knots until flaps are lowered to 40 percent.

NOTE

The term "Landing Assured" shall be interpreted as follows: On final approach with runway or approach lights in sight, within one mile of runway and a position to complete the landing safely.

NOTE

1. Two-engine approach speed is charted 40% flap approach speed.
2. Set airspeed command markers to two-engine approach speed.
3. For straight in approaches, accomplish the before landing checklist prior to intercepting glideslope.

C5A-1-X1/0-121

Figure 2-12.

AIRBORNE RADAR APPROACH TO LANDING

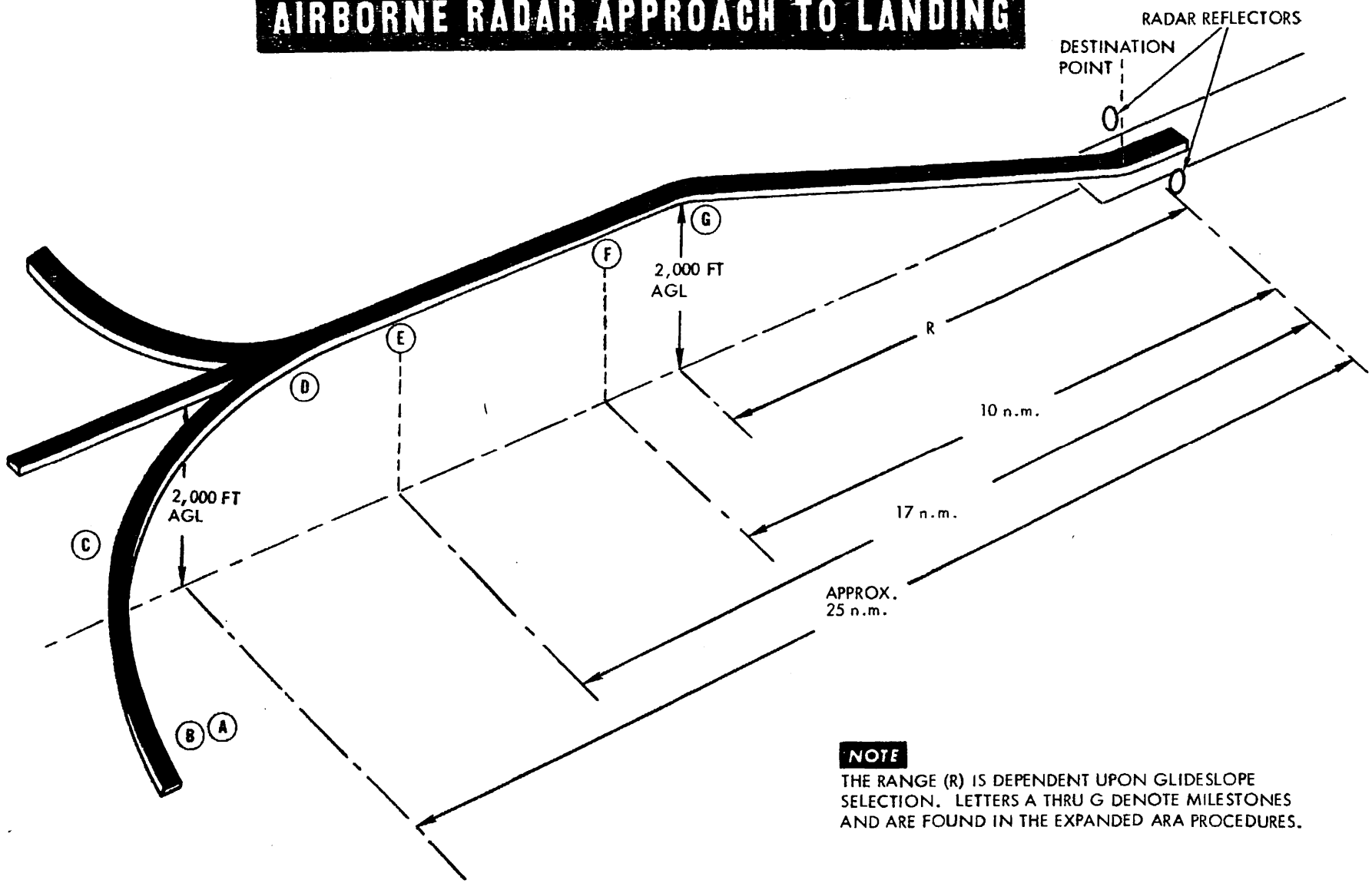

NOTE

THE RANGE (R) IS DEPENDENT UPON GLIDESLOPE SELECTION. LETTERS A THRU G DENOTE MILESTONES AND ARE FOUND IN THE EXPANDED ARA PROCEDURES.

C5A-1-X3/4-200

Figure 2-13.

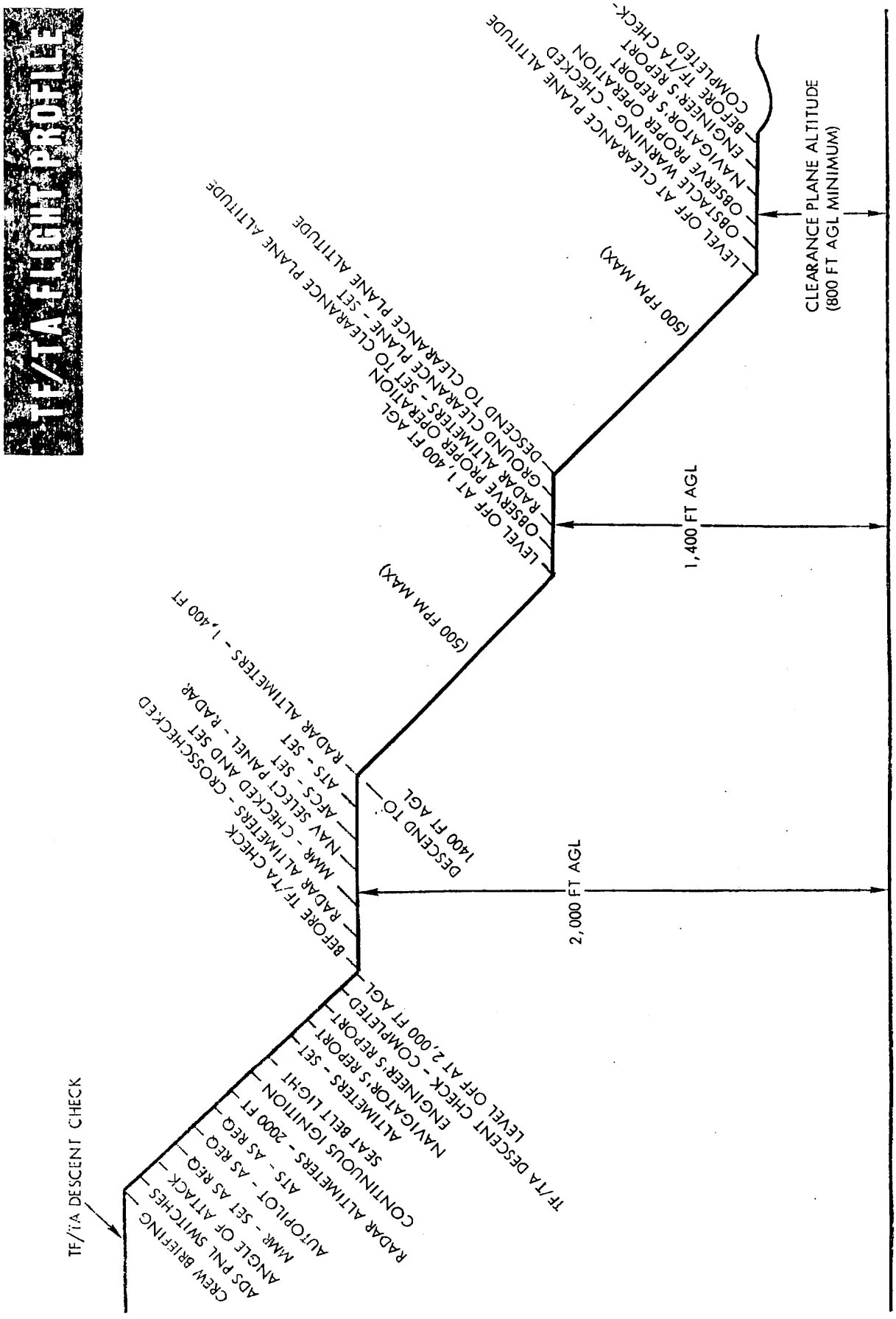
TF/TA FLIGHT PROFILE
CREW BRIEFING
ADS PNL SWITCHES
ANGLE OF ATTACK
MMR - SET AS REQ
AUTOPILOT - AS REQ
ATS - AS REQ
CONTINUOUS IGNITION
SEAT BELT LIGHT
ALTIMETERS - SET
NAVIGATOR'S REPORT
ENGINEER'S REPORT
RADAR ALTIMETERS - 2000 FT
TF/TA DESCENT CHECK
LEVEL OFF AT 2,000 FT AGL
ENGINEER'S REPORT - COMPLETED
NAVIGATOR'S REPORT
BEFORE TF/TA CHECK
RADAR ALTIMETERS - CROSSCHECKED
MMR - CHECKED AND SET
NAV SELECT PANEL - RADAR
AFCS - SET
ATS - SET
RADAR ALTIMETERS - 1,400 FT
DESCEND TO 1400 FT AGL
(500 FPM MAX)
LEVEL OFF AT 1,400 FT AGL
OBSERVE PROPER OPERATION
RADAR ALTIMETERS - SET TO CLEARANCE PLANE - SET
GROUND CLEARANCE PLANE ALTITUDE
DESCEND TO CLEARANCE PLANE ALTITUDE
(500 FPM MAX)
LEVEL OFF AT CLEARANCE PLANE ALTITUDE
OBSTACLE WARNING - CHECKED
OBSERVE PROPER OPERATION
NAVIGATOR'S REPORT
ENGINEER'S REPORT
BEFORE TF/TA CHECK-COMPLETED
2,000 FT AGL
1,400 FT AGL
CLEARANCE PLANE ALTITUDE
(800 FT AGL MINIMUM)
C5A-1-X3/4-202

Figure 2-14.

BEFORE LANDING/TRAFFIC PATTERN.

The flaps and landing gear shall be extended on the pilot's command. For full stop landings, and the initial landing of a series of touch-and-go landings the pilot shall state "GEAR DOWN, BEFORE LANDING CHECKLIST" to initiate this checklist. The copilot shall acknowledge the GEAR DOWN command and accomplish the complete checklist. During subsequent patterns and approaches for touch-and-go landings, the pilot shall state "GEAR DOWN, TRAFFIC PATTERN CHECKLIST" to initiate this checklist. In this case, only the asterisk items of this checklist need be accomplished. In case of an immediate return after take-off, or a flight of 30 minutes or less to a base of intended landing, the after take-off climb, cruise, and descent checklists may be omitted. If the After Take-off and Climb checklist has been initiated, the Descent and a complete Before Landing/Traffic Pattern checklist will be accomplished.

PILOTS

*1. Landing Gear - "DOWN AND ALIGNED" (CP) "DOWN" (P)

Check the landing gear lever down, indicators for green wheels and light in gear lever off. The copilot will check the MLG crosswind position indicators for alignment. If a main gear is not aligned, use the MLG Bogie Emergency Positioning switch to center the divergent gear prior to landing.

If the crosswind inoperative light remains on after the gear is down (green wheels) and the crosswind circuit breakers are closed, the Crosswind Reset switch should be placed to RESET to extinguish the light.

CAUTION

If the emerg sw on light is on and the NLG does not extend by placing the landing gear lever down, do not extend the NLG with the nose landing gear Emergency Extend switch. Damage to the NLG doors could occur. If time permits, the malfunction should be corrected by using the Inflight Troubleshooting of Landing Gear Extension and Retraction System in Section I. If not, refer to the Emergency NLG Extension - Emerg Sw On Light ON procedure in Section III.

*2. Landing Gear Crosswind Positioning - "SET____DEGREES_____" (CP)

The copilot shall set in the required setting with the Crosswind Positioning knob and check the nose and main gear crosswind position indicators for proper indications. He shall then state the settings.

FLIGHT ENGINEER

1. Fuel Panel - SET
2. PTUs - ON
3. Sys No. 1 and No. 4 Hydraulic Boost Pumps - ON
4. TRT Inflight EPR - SET
5. Floor Heat - AS REQUIRED
6. Engine Anti-Ice - AS REQUIRED
7. Ice Detector - MANUAL
8. Seat Belts and Shoulder Harnesses - ADJUSTED

*9. Landing Gear Lever - DOWN

10. Enter CMA Message - AS REQUIRED

Note

If landing gross weight is above 635,850 pounds, enter CMA message 9212001. If landing gross weight is below 635,850 pounds, enter CMA message 9212002.

SCANNER

1. Crew Door Mechanical Lock - REMOVED

On 70168, 00449 and up and airplanes modified by T.O. 1476, remove the mechanical lock.

WARNING

If no gap exists between the lock actuator body and the mechanical lock, do not remove the lock until the airplane is on the ground and depressurized. Failure to comply could result in the crew entrance door opening in flight.

PILOTS	FLIGHT ENGINEER	SCANNER

*3. Flaps and Slats - "STATE SETTING" (CP)

Flaps and slats will be set to the appropriate position for the initial portion of the approach being flown.

State flap and slat position indicator readings.

4. LDCS - "SET" (CP) (LDCS INSTALLED)

On 00461 and up and airplanes modified by T.O. 1334, downrig the ailerons to indicate a 0-degree trim position as follows:

a. LDCS Arming Switch - ARM

b. LDCS Switch - DN RIG

Place and hold the LDCS switch to the DN RIG position until the aileron trim indicators read 0 degrees.

c. LDCS Arming Switch - OFF

d. Ailerons - TRIMMED

Normal aileron trim may have to be applied to produce a wings level (hands off) attitude.

*5. Rudder Lim Switch - "MIN Q" (CP)

*6. Crew Briefing - "COMPLETED" (P)

A complete briefing shall be given prior to each full stop landing and the first of each series of touch-and-go landings. Subsequent briefings need cover only changes to the original briefing.

*7. Normal Brake Pressure - "CHECKED" (CP)

PILOTS	FLIGHT ENGINEER	SCANNER
Note If the Alternate Main Landing Gear Retraction Procedure in Section I has been used or if an MLG circuit breaker has been opened, accomplish the Brake System Check (Inflight) in Section III.		
8. Altimeters - "STATE SETTING" (CP,P,N) A See 155-92		
9. Landing/Taxi Lights - AS REQUIRED The copilot shall extend the landing lights for night landings. Both the landing and taxi lights shall be turned on at the pilot's command. When not in continuous contact with the control tower during VMC landings, the taxi lights should be used on final approach.		
10. No Smoking and Seat Belt Lights - "ON" (CP)		
*11. Crew Landing Report - "_____ READY" (N,E,LM,S)	*11. Crew Landing Report - "ENGINEER READY" (E)	*2. Crew Landing Report - "SCANNER READY" (S) If loadmaster is not on flight deck, assure that relief crew area and courier area are ready. Make aft flight deck report in proper sequence. Return to seat and fasten seat belt.
*12. Before Landing/Traffic Pattern Check - "COMPLETED" (CP)		

LANDING.

NORMAL LANDING.

CAUTION

During high gross weight approaches (above 600,000 pounds) some thrust should be maintained during the approach and flare to preclude a high sink rate and possible damage to the airplane.

WARNING

Bank angles should be limited to 15 degrees when the airplane is below 200 feet and should not exceed 5 degrees when 50 feet or below to prevent the wing tip from striking the ground. Refer to Section V for Attitude Limits Below 200 Feet.

The final approach should be flown, with LANDING flaps, at approach speed until landing is assured. Cross the threshold at approach speed at an altitude of 50 feet. (See figure 2-15.) After the main wheels touch down, lower the nose wheel to the runway smoothly. Primary directional control will be rudder, aileron, nose wheel steering, and differential braking, in that order. The copilot shall assist with aileron control during the landing roll as directed by the pilot. The rudder should be used primarily at the higher speeds and on wet and icy runways. Stopping is accomplished through the use of spoilers, wheel brakes, and reverse thrust.

Operate thrust reversers as follows:

Planned stopping distance should not be predicated on use of thrust reversers.

a. Set the Thrust Reverse Limiter prior to landing.

Note

Do not hold the ground spoiler handle against the locking pin. The force may prevent retraction of the pin when a touchdown and/or spin-up signal is received, making it impossible to deploy the spoilers.

b. After the main landing gear is firmly on the runway, the pilot shall state "SPOILERS" and place all four throttles to the REV IDLE position. Where landing distance is not a factor, the deployment of spoilers may be delayed until after the nose gear is lowered to the runway. Upon the pilot's command, the copilot shall place the spoiler handle to OPEN. The copilot shall observe that all four (4) thrust reverse extended lights are on and announce any light that is not on.

c. After the nose wheel is on the runway, move all four throttles smoothly to the desired reverse position.

d. After slowing to taxi speed, all throttles may be returned to IDLE position.

MINIMUM RUN LANDING.

The minimum run landing technique must be used in order to achieve the charted landing performance data presented in Part 9 of T.O. 1C-5A-1-1.

A minimum run landing should start with the airplane at the correct approach speed at a point 50 feet over the approach end of the runway. The flare should be accomplished so as to reduce the rate of sink to within the allowable sink rate of the airplane for the associated gross weight. Throttle retardation should be accomplished such that the throttles are closed at touchdown.

Upon main landing gear impact the pilot shall state "SPOILERS," apply full anti-skid brakes, and place all four throttles to the desired reverse position. Upon the pilot's command, the copilot shall place the spoiler handle to OPEN. The copilot shall observe that all four (4) thrust reverse extended lights are on and announce any light that is not on. Deployment of ground spoilers and application of maximum anti-skid braking will result in a pronounced nosedown pitching moment. Full aft control column movement should be used to reduce the resultant nose gear impact.

Note

In order to insure that maximum brake pressure is being generated, the pilot should apply maximum forces to the brake pedals.

WARNING

If a minimum run landing is planned, the crew shall ensure that all objects are secured to preclude their movement during the ground roll.

EFFECT OF GUST.

It is generally better to touch down at a slightly higher speed in gusty air. Gusts seldom exceed 50 percent of the average wind velocity and an approach speed increase equal to the reported gust increment should be accounted for, but not to exceed 10 knots. For example, if the wind velocity is 25 knots with gusts to 35 knots, the speed increase should be 10 knots. In this case, cross the threshold at approach speed plus 10 knots. The command airspeed markers will be increased for the gust increment not to exceed 10 knots.

CROSSWIND LANDING.

The Runway and Crosswind Component chart and Crosswind Landing Gear Position chart in Part 9 of T.O. 1C-5A-1-1 provide a convenient means of resolving the wind into its components and determining a setting for the landing gear crosswind positioning.

The landing gear crosswind positioning system may be used for landing provided:

a. A satisfactory BITE test of the crosswind computer was completed during the Preflight Checks.

b. The proper setting, but no greater than 18 degrees, has been selected with the Crosswind Positioning knob.

During the landing roll, maintain the wings level with aileron. After the airplane has slowed to a taxi speed below 20 knots on the runway, the copilot shall return the Crosswind Positioning knob to zero degrees at a slow rate (no greater than 2 degrees per second) upon command of the pilot.

Note

If the Crosswind Positioning knob is not at zero degrees, the caster system will be inoperative.

If the crosswind inoperative light comes on, refer to Crosswind Asymmetry Malfunction After Crosswind Positioning Is Set For Landing in Section III.

If the crosswind positioning system is not being used, the approach to landing can be made using a combination of wing down and crab to counteract the effect of the crosswind on the airplane. The crab should be taken out prior to touchdown. The airplane has sufficient roll power to counter both the steady crosswind and gusts. The approach speed may be increased up to 15 knots to allow operation in the "normal zone" of the Runway and Crosswind Component chart.

VISUAL APPROACH SLOPE INDICATOR (VASI) APPROACHES.

Due to the height of the cockpit above the airplane gear, and the lengthy distance between the cockpit and the aftermost gear, it has been analytically determined that the airplane could conceivably land short of the runway if the pilot was tracking the lowest portion of the normally acceptable VASI path segment. This should not happen unless the pilot completely disregards all other available landing cues, but the pilot should be aware of the possibility. VASI systems are designed as VFR approach aids only and not as aids to be flown continually to touchdown: therefore, the recommended procedure is to abandon VASI guidance at flare altitude or higher, and to transition to runway references for landing.

TOUCH-AND-GO LANDING.

Touch and go landings shall be made only when authorized by the Major Air Command.

WARNING

Touch-and-go landings shall not be accomplished for practice when the approach incorporates any simulated pitch trim, landing gear, or wing flap malfunctions. This does not preclude accomplishing touch-and-go landings with the wing flaps set at the 40 percent flap position. Any flap setting less than the 40 percent approach flap setting is considered a wing flap malfunction and touch-and-go landings in this configuration are prohibited.

Basic procedures with respect to configuration for pattern approach and landing are identical to those for the typical four-engine landing and go-around pattern.

For the initial landing in a series of touch-and-go landings, the pilot shall state "GEAR DOWN, BEFORE LANDING CHECKLIST" and the complete Before Landing/Traffic Pattern checklist shall be accomplished. When the point is reached in subsequent patterns or approaches where the before landing check is normally called for the pilot shall state "GEAR DOWN, TRAFFIC PATTERN CHECKLIST," and the asterisked items on the Before Landing/Traffic Pattern checklist shall then be accomplished.

When staying in the traffic pattern for a series of touch-and-go landings, the gear and flaps may be retracted after each takeoff or left extended at the pilot's discretion.

If the full stop landing is planned while remaining in the traffic pattern or immediately following a missed approach/go-around, the complete Before Landing checklist shall be accomplished.

The specific procedures for touch and go landings shall be as follows:

a. After touchdown, the pilot shall lower the nose gear to the runway. The copilot shall reset the flaps to 40 percent, reset the trim, and state "FLAPS AND TRIM SET."

b. The pilot shall then advance the throttles, not to exceed TRT-INFLIGHT EPR. Normally, NRT will provide sufficient thrust for touch-and-go landings and should be used to prolong engine life. The copilot shall back up the throttles and make the final adjustment of power for the pilot. The pilot shall, however, retain primary control of the throttles. Normal take-off procedures shall be followed from that point.

GO-AROUND.

When the decision to go-around has been made, depress the G/A pushbutton and advance the throttles to TRT-INFLIGHT EPR, retract the flaps to 40 percent and establish a pitch attitude which will center

TYPICAL LANDING AND GO-AROUND PATTERN

NOTE

The bank angle should not normally exceed 30 degrees in a turn.

CAUTION

During high sink rate landings, touchdown airspeeds below minimum may result in striking the aft fuselage on the runway.

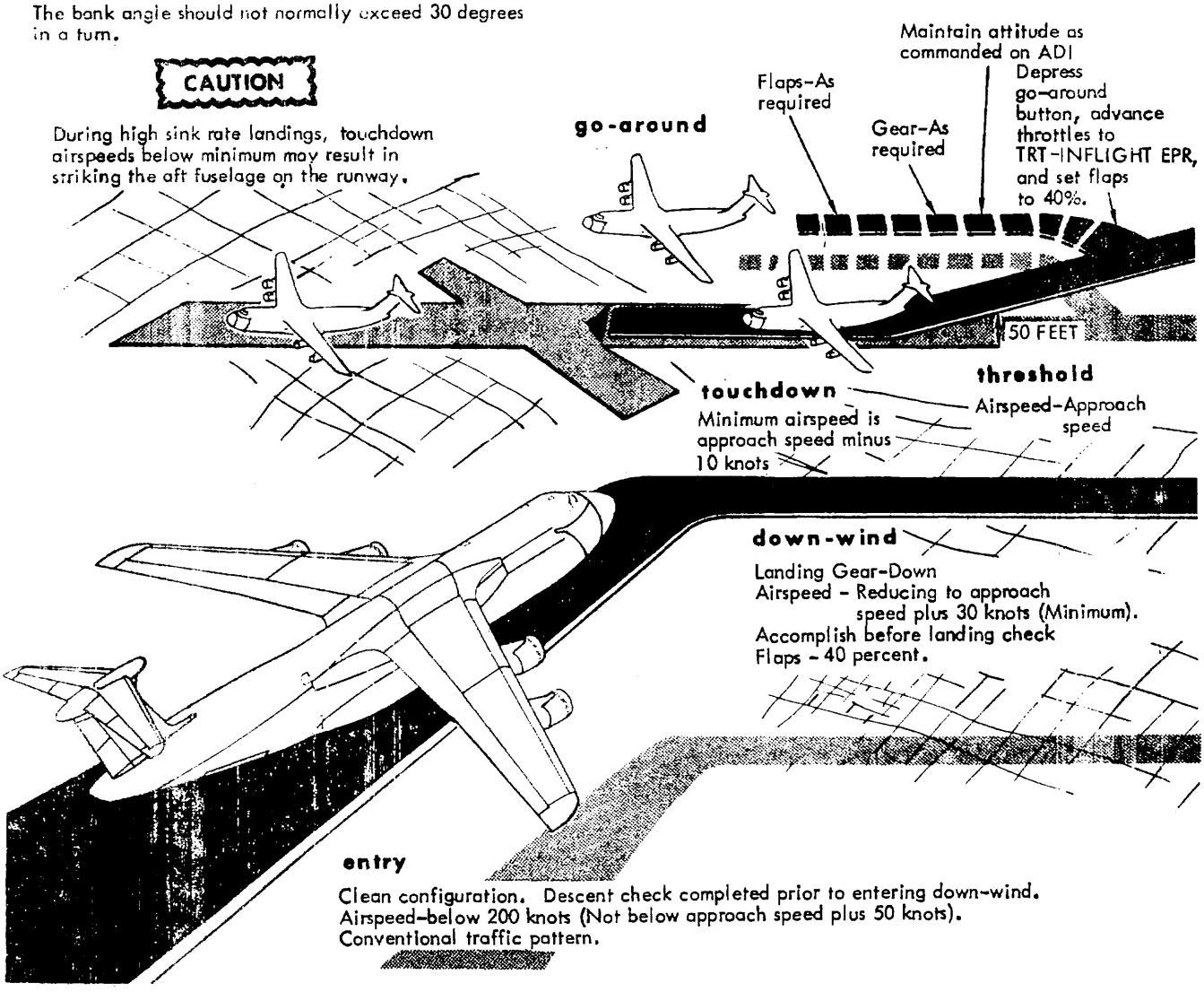

C5A-1-XZ/0-149-1

Figure 2-15. (Sheet 1 of 2)

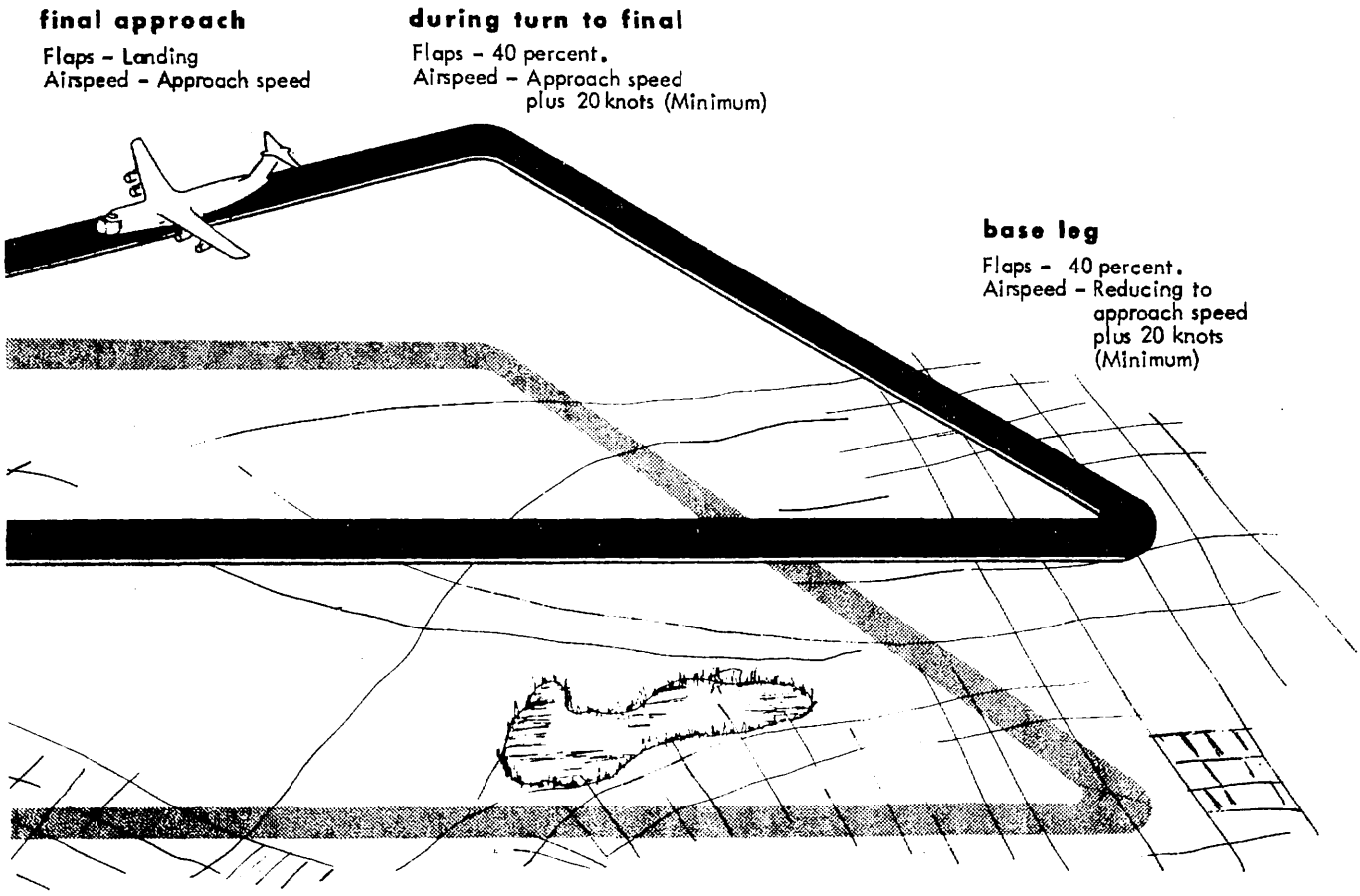

Figure 2-15. (Sheet 2 of 2)

the pitch steering bar. Retract the gear when a positive rate of climb has been established and continue as in a normal climb after take-off. If crosswind positioning has been used for the approach, gear retraction time will be longer than normal. If the pilot desires to make a go-around without pitch steering or if the pitch steering bar malfunctions, advance the throttles to TRT-INFLIGHT EPR, establish a pitch attitude of 8 to 10 degrees, retract the flaps to 40 percent and accelerate to go-around speed. Retract the gear when a positive rate of climb has been established and continue as in a normal climb after take-off. $V_{G/A}$ speed may be used in lieu of V_{MCO} + 10.

Note

If another approach is to be made, the gear may be left down and the flaps set to 40 percent.

Any time an approach is being made with the ATS engaged, a go-around can be initiated by depressing the G/A pushbutton. The throttles will advance toward the fixed throttle position which may exceed go-around EPR. The pilot should monitor EPR so as not to exceed TRT-INFLIGHT EPR. Depressing the G/A pushbutton the second time disengages the go-around mode.

AFTER LANDING.

This check may be accomplished on the runway or after clearing runway when the airplane has slowed to taxi speed and when good judgment dictates that it can be accomplished safely.

CAUTION

When parking the airplane for kneeling, all landing gear must be centered and the airplane taxied straight ahead a few feet to relieve loads on the landing gear. Failure to comply could result in damage to the landing gear during kneeling.

CAUTION

If all engines are required to be shut down prior to take-off, accomplish this check before accomplishing the Engine Shutdown check. This will prevent power interruptions and possible damage to avionics equipment.

When taxiing back for take-off, the RAT, IFF, radios, radar, and radar altimeter may be left in AUTO, STAND-BY, or ON position. In this case it is not necessary for the flight engineer to accomplish items 3 through 11.

PILOTS

1. Landing Gear Crosswind Positioning - SET

   Set the landing gear at 0 degrees and check that gear is aligned with airplane.

   When operating with a failed crosswind computer but operable castering, re-engage the X-Wind Shutoff Valve Cont circuit breaker on the flight engineer's circuit breaker panel No. 5 after decelerating to taxi speed and prior to MLG castering operation.

2. Anti-Skid Switch - "OFF" (CP)
3. Pitot Heat and Angle-of-Attack De-Ice Switches - OFF

FLIGHT ENGINEER

1. Hydraulic Pressures - CHECKED
2. Cabin Pressure Differential Indicator - ZERO
3. APUs - START
4. APU Bleed Valves - OPEN
5. APU Iso Valves - OPEN
6. Air Cond Master Switch - AS REQUIRED
7. APU Generator Selector Switch - AS REQUIRED

SCANNER

PILOTS	FLIGHT ENGINEER	SCANNER
4. Rudder Lim Switch - "AUTO" (CP)	Select either L or R APU.	
5. IFF - AS REQUIRED Turn the IFF to STBY as soon as possible. This will eliminate signals from taxing or parked aircraft which would otherwise block the controller's scope and interfere with the control of airborne aircraft.	a. Monitor Bus Switches - AS REQUIRED	
6. Ram Air Turbine Switch - "RETRACT" (P)	8. APU/EXT PWR Selector Switch - APU	
7. Spoilers - CLOSED	9. Bus Tie Switches (One At A Time) - GRD TRANS	
8. Flaps and Slats - "AS REQUIRED" (CP) The wing flaps may be placed in the take-off position if taxi-back for another take-off is to be accomplished. When thru-flight is anticipated with no kneeling, the flaps and slats may be left in the landing position.	10. Hydraulic Pumps - CHECKED Place the Hydraulic Pump switches, one at a time, to the DEPRESS position and check that the press low light comes on. Return the switch to NORM and wait approximately 2 seconds prior to selecting DEPRESS on the next pump to be checked.	
9. Radios, Radar, and Radar Altimeters - "SET" (CP,P) When a navigator is not aboard, the flight engineer shall turn off radar and doppler navigation equipment in accordance with procedures in Section I. The pilot shall ensure that the Ferry switch is in the NORMAL position.		
10. Navigator's Report - "CHECK COMPLETED" (N)		
11. Engineer's Report - "CHECK COMPLETED" (E)	11. Engineer's Report - "CHECK COMPLETED" (E)	
12. After Landing Check - "COMPLETED" (CP)		

AIR TRANSPORTABLE LOADING DOCK TAXI PROCEDURES.

TAXI IN PROCEDURE.

Note

Refer to Section V for taxi limitations.

Note

The pilot must accomplish the following taxi procedure since the airplane docking and alignment control system (ADAC) is aligned to the pilot's eyes only. The pilot should maintain a normal seating position and minimize head movement when bracketing the green (on course) light beam. The green light beam should be thought of the same as a runway center line. The pilot should endeavor to line up with this beam in as short a distance as possible to minimize bracketing. Light beam colors and dimensions are shown in figure 2-16.

a. While taxiing perpendicular to the loading dock, start the inbound turn after passing beyond the green light the distance required to bring the main landing gear up close to the new center line. If starting the turn at the minimum distance (318 feet) from the stop indicator, use 60° nose wheel steering.

b. During the approach, when making a right hand turn toward the dock, the pilot will pass through the blue, then the green and on into the amber before turning. For a left hand turn during the approach, the pilot will pass through the amber, then the green and on into the blue before turning.

c. Start bracketing inbound as the airplane re-enters the green light beam.

d. Keep the green light aligned between the vertical stripes on the sighting board while taxiing in. Corrections for left and right errors are made by turning toward the green light. The green light will change to blue or amber as it appears to leave the left or right edge of the sighting board respectively.

e. Attempt to have the airplane aligned in the green area 170 feet prior to the stopping point. If the Dock Commander desires the pilot to stop the airplane, he will signal the pilot by turning off the ADAC light. A ground marshaller on external interphone contact should provide movement clearance prior to docking continuation.

f. Stop the airplane when the stop indicator comes in contact with the center windshield and set the parking brakes.

Note

Due to airplane height variations with various load and center-of-gravity conditions, the stop indicator may initially contact the airplane below the windshield. The pilot should continue forward motion until the stop indicator is rolled up to the center area of the center windshield.

Note

Stopping tolerances are such that the airplane may be stopped 12 inches short of contact with the stop indicator or 24 inches after contact.

CAUTION

The airplane visor must be raised prior to forward kneeling to prevent any possible airplane to dock contact.

Note

Cargo operations may dictate intermittent dock retractions to allow forward ramp positioning to the drive-in mode. Most vehicular/cargo items can be moved in or out of the airplane with the dock partially retracted. Airplane engine operation may be as determined by the pilot, but noise is considerably reduced if only the outboard engines are operating.

TAXI OUT PROCEDURE.

Note

Adequate clearance exists to tow an airplane from the dock. Prior to towing, the airplane must be unkneeled and the nose wheel turned 45 degrees.

CAUTION

The dock adapter must be fully retracted or the airplane must be fully unkneeled before closing the visor to prevent any possible airplane to dock contact.

a. Ensure that the loading dock adapter is fully retracted before taxiing.

b. Turn nose wheel 45° and place aft main gear in free caster.

c. Release the parking brake. When airplane is rolling, turn nose wheel 60°.

d. Use minimum asymmetrical thrust necessary to taxi away from loading dock.

e. After making 90° turn away from dock, maintain heading for 270 feet minimum before making another turn.

OPERATIONAL STOP CHECKLIST.

If making an operational stop, the normal After Landing Checklist will be completed prior to performing the Operational Stop Checklist.

On 00461 and up and airplanes modified by T.O. 1345, if kneeling operations are required, the pilot may call for the applicable kneeling/unkneeling checklist after completion of the Operational Stop After Landing Checklist, the Operational Stop Engine Shutdown Checklist or the Operational Stop Starting Engines Checklist. Under these circumstances the scanner will take the left scanner (LS) position and follow the checklist as directed by the flight engineer (E). One loadmaster will take the right scanner (RS) position. The other loadmasters will remain in the troop compartment, with passengers/troops (if applicable).

On 68304, 68307, 70167, 70168 and 70170 through 00460 not modified by T.O. 1345, if kneeling operations are required, the pilot may call for the applicable kneeling/unkneeling checklist after completion of the Operational Stop After Landing Checklist, the Operational Stop Engine Shutdown Checklist, or the Operational Stop Starting Engines Checklist. Under these circumstances the scanner will take the left scanner (LS) position and follow the checklist as directed by the copilot (CP). One loadmaster will take the cargo compartment loadmaster (CLM) position and the other loadmaster the right scanner (RS) position. The third loadmaster will remain in the troop compartment, with passengers/troops (if applicable).

CAUTION

If the airplane is to be mated to the ATLD, the visor door must be opened prior to forward kneeling to prevent any possible airplane to dock contact.

CAUTION

If cargo offloading is required with engines running, all of the vehicle restraints may be removed except one forward and one aft provided the drivers are in position and the vehicle brakes are set. This restraint will be removed while the airplane is being kneeled.

If the cargo doors are to be operated with engine(s) running, the pilot shall state "clear to open/close_____ door(s)." The scanner shall state "_____door(s) clear." The loadmaster shall state "opening/closing the _____door(s)."

Note

The visor may be opened prior to IDNE shutdown to avoid a five-minute delay.

Loading/offloading with engines running should normally be accomplished through the forward cargo doors. The aft cargo doors may be used, but are less desirable due to engine exhaust. When offloading, the loadmaster will direct the vehicle operators to start the engines immediately after the cargo doors are open. The vehicle operators will insure proper air brake pressure prior to the release of the remaining forward and aft restraints. When the aft cargo doors are used, personnel and vehicle operators shall be briefed to arrive or depart the airplane on a direct line with the fuselage at least 150 feet before turning, 300 feet before stopping and as

LOADING DOCK TAXI PROCEDURES

TAXI IN

NOTE

The pilot must accomplish the taxi-in operation since the sighting devices are aligned to the pilot's eyes only. Maintain normal seating position and minimize head movement during taxi.

1. Begin turn after passing the green light the desired distance for proper main landing gear position in relation to the green (on course) beam. When minimum distance, make turn with 60° nose wheel steering.
2. Start bracketing inbound when green light is again visible.
3. Keep green light aligned between vertical stripes on sighting board while taxiing in.
4. Stop when stop indicator comes in contact with center windshield.

NOTE

Attempt to have airplane aligned on center line 170 feet prior to stopping point.

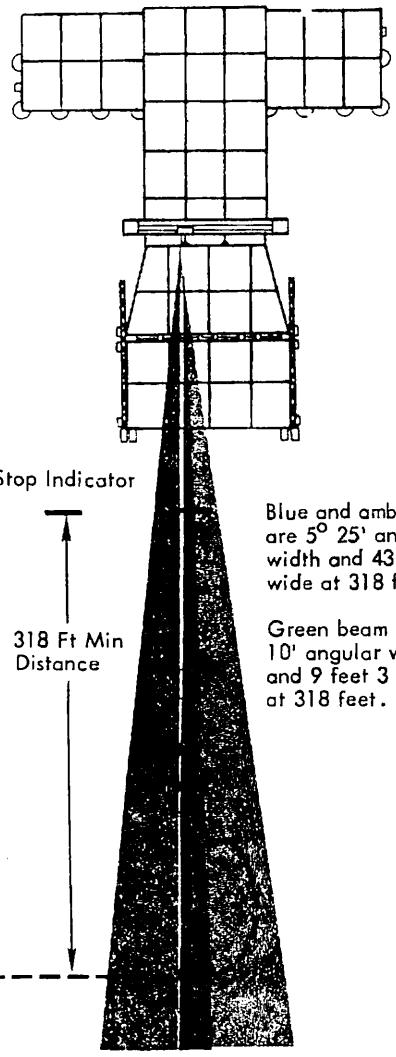

BRACKETING

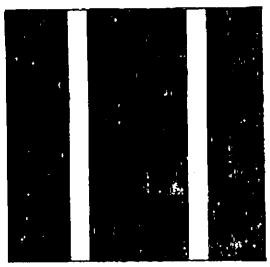

LEFT OF CENTER

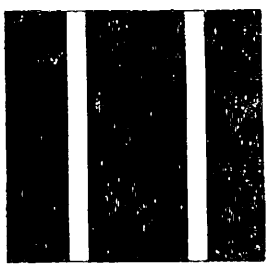

RIGHT OF CENTER

ON CENTER

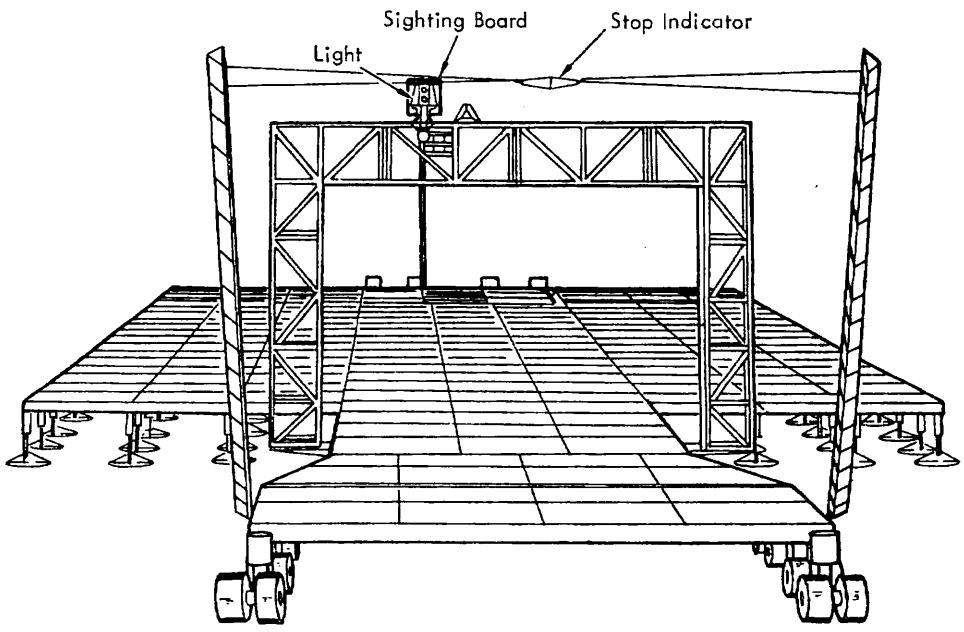

C5A-1-XI/0-169-1

Figure 2-16. (Sheet 1 of 2)

TAXI OUT

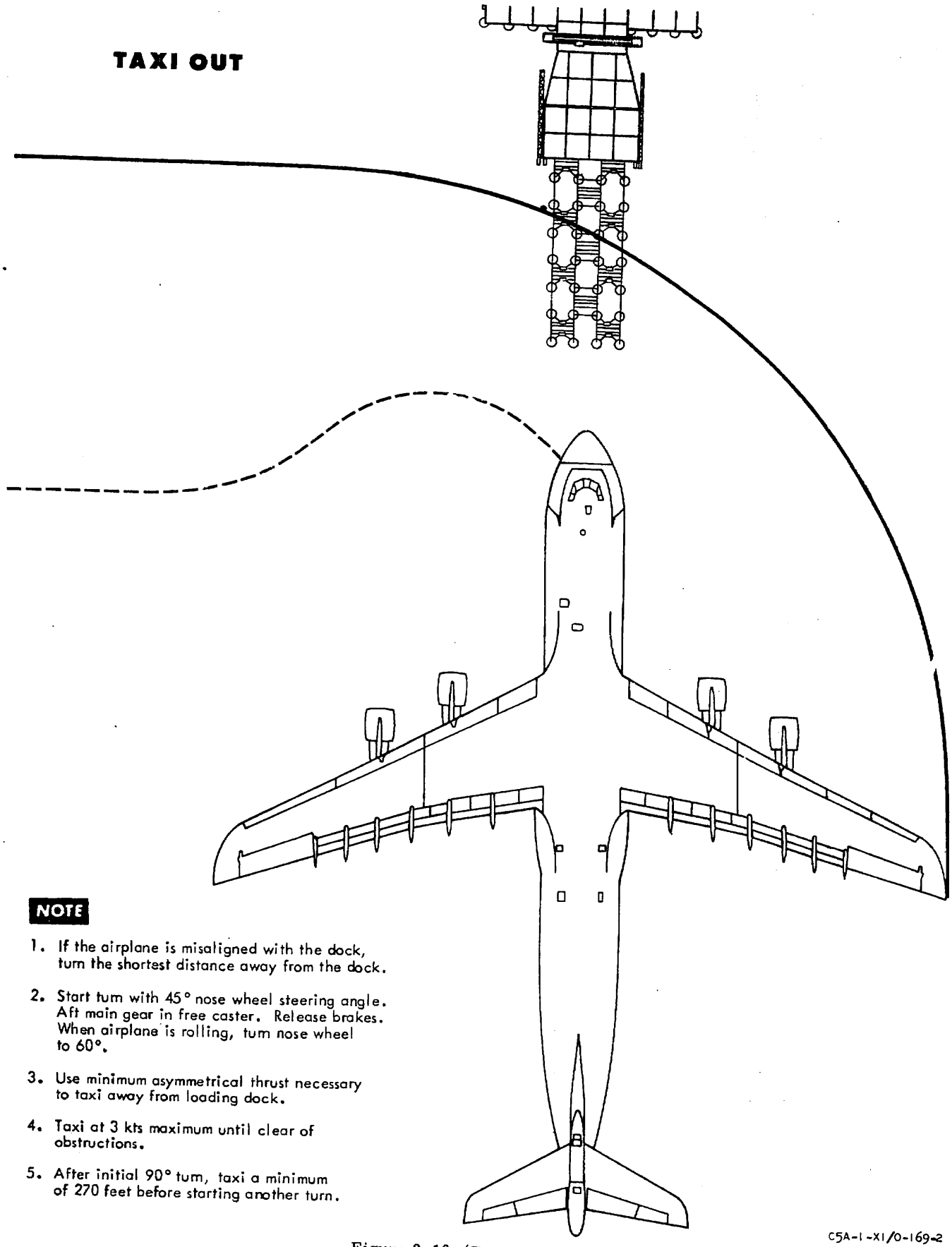

NOTE

1. If the airplane is misaligned with the dock, turn the shortest distance away from the dock.
2. Start turn with 45° nose wheel steering angle. Aft main gear in free caster. Release brakes. When airplane is rolling, turn nose wheel to 60°.
3. Use minimum asymmetrical thrust necessary to taxi away from loading dock.
4. Taxi at 3 kts maximum until clear of obstructions.
5. After initial 90° turn, taxi a minimum of 270 feet before starting another turn.

C5A-1-X1/0-169-2

Figure 2-16. (Sheet 2 of 2)

directed by ground marshallers. Marshallers will be identified by distinctive clothing so that drivers and personnel can make positive identification and follow signals. When onloading is required, the primary loadmaster will deplane and coordinate onload preplan and sequence with ALCE or ground controlling agency supervisor while airplane is being kneeled. Engine running onload will normally be accomplished with the airplane in forward kneel. Aircrew personnel performing right and left observer positions during kneeling operations will move forward to a position 25 feet to the left and right of the forward ramp extension to direct personnel/equipment into the airplane. ALCE or ground controlling agency will marshall equipment adjacent to the airplane in onload sequence no closer than 300 ft, and position necessary ground guides at 150 and 300 ft. The loadmaster will brief and position the tiedown crew, commence onload and tiedown of vehicles, check onload and tiedown after completion, deplane the tiedown crew, accomplish the "After Loading" checklist, and close the ramps and door in accordance with the loadmaster's abbreviated checklist.

To provide maximum ventilation to the cargo compartment when loading/off-loading self-propelled vehicles, accomplish the following:

a. Troop Doors - OPEN

b. Flight Deck Entry Door - CLOSED

c. Air Cond Master Switch - BOTH

d. Air Flow Switch - MAX CARGO

e. Recirc Fan - OFF

Note

If fumes enter the flight deck area, the pilot and copilot side windows may be opened and oxygen used as required.

OPERATIONAL STOP AFTER LANDING.

The Operational Stop After Landing Checklist will be performed any time the airplane is to be mated with the Air Transportable Loading Dock, when loading/offloading is to be accomplished with engines running, or when making an operational stop and ground time will be at a minimum.

CAUTION

When parking the airplane for kneeling, all landing gear must be centered and the airplane taxied straight ahead a few feet to relieve loads on the landing gear. Failure to comply could result in damage to the landing gear during kneeling.

PILOTS

1. Cargo Door Arming Switches - "AS REQUIRED" (CP)

If the cargo doors are to be opened the copilot will arm the applicable cargo door system.

2. Brake Switch - "EMER" (CP)

After the airplane has stopped, place the Brake Switch to EMER.

3. Parking Brake - "SET" (P)

4. Seat Belt Light - "AS REQUIRED" (CP)

FLIGHT ENGINEER

LOADMASTER/SCANNER

1. Flight Deck Ladder - "AS REQUIRED" (LM)

During taxi-in, after the cargo compartment loadmaster and scanner are in position in the cargo compartment, the loadmaster will raise the flight deck ladder if required.

2. Troop Compartment Ladder "AS REQUIRED" (LM)

During taxi-in, after the aft loadmaster is in position in the cargo compartment he will raise the troop compartment ladder, if required.

PILOTS	FLIGHT ENGINEER	LOADMASTER/SCANNER
If passengers are to deplane while engines are running turn off the seat belt light. The light must be turned on again prior to taxi.		
5. Scanner Cleared to Depart Airplane - "DEPARTING AIRPLANE" (S)		3. Scanner Cleared to Depart Airplane - "DEPARTING AIRPLANE" (S)
6. Operational Stop After Landing Check - "COMPLETED" (CP)		If kneeling operations are to be be performed the scanner will deplane with the NLG pin and the nose gear strut limiter and/or kneeling collars.

OPERATIONAL STOP ENGINE SHUTDOWN.

Note

If all engines are to be shutdown for an extended period, perform the normal engine shutdown checklist. If any or all engines are to be shut down for a short period while the flight crew remains with the airplane, proceed as follows:

PILOTS

1. Nacelle and Pylon Inspection - "COMPLETED" (S)
2. Continuous Ignition - "OFF" (P)
3. Fuel and Start Ignition - "STOP" (P)

Place throttles to IDLE and place the Fuel and Start Ignition switches to STOP for the engines being shut down.

Note

If APU power is not available and external power is to be used, No. 1 or No. 2 engine should be left running until external power is connected and selected by the flight engineer.

FLIGHT ENGINEER

1. Air Cond Master Switch - AS REQUIRED
2. Sys No. 1 and No. 4 Hydraulic Boost Pumps - AS REQUIRED

   If the ATMs are to be turned on, turn on the hydraulic boost pumps.
3. ATMs - AS REQUIRED

   If all engines are to be shut down, turn on the ATMs.

   Note

   Ensure that the floor heat system has been turned off prior to turning on the ATMs. Sufficient bleed air pressure is not available to operate both systems.
4. Fuel Boost Pumps - OFF

Turn off fuel boost pumps for engines that are shut down.

5. PTUs - OFF

LOADMASTER/SCANNER

1. Nacelle and Pylon Inspec- "COMPLETED" (S)

CAUTION

Prior to shutdown, visually inspect all nacelles and pylons for fluid leaks. Remain on interphone and observe each engine for leaks during shutdown.

2. Loadmasters will load/offload cargo as required IAW appropriate checklists.

PILOTS	FLIGHT ENGINEER	LOADMASTER/SCANNER
CAUTION Allow the engine to idle at least five minutes before shutdown (taxi time may be included if N_2 rpm does not exceed 76%). This idling period allows the engine to cool slowly to prevent possible damage resulting from rapid temperature changes.		
4. Chocks and NLG Pin - "AS REQUIRED" (P,S) If all engines are shut down and ATMs are turned off, the NLG pin should be installed if unkneeled and the chocks shall be installed.		3. Chocks and NLG Pin - "AS REQUIRED" (P,S)
5. Engineer's Report - "CHECK COMPLETED" (E)	6. Engineer's Report - "CHECK COMPLETED" (E)	
6. Operational Stop Engine Shutdown Check - "COMPLETED" (CP)		

OPERATIONAL STOP STARTING ENGINES.

PILOTS	FLIGHT ENGINEER	LOADMASTER/SCANNER
1. Chocks and NLG pin "REMOVING AND STOWING" (S)	1. Air Cond Master Switch - OFF	1. Chocks and NLG pin - "REMOVING AND STOWING" (S)
	2. Sys No. 1 and No. 4 Hydraulic Boost Pumps - ON	
	3. ATMs - AS REQUIRED	
	4. PTUs - AS REQUIRED	
	5. Bot Hydraulic Pumps - DEPRESS Depressurize the bottom hydraulic pumps for the engines that are shut down.	
	6. Fuel Boost Pumps - ON	
2. Clear to Start Engines - "ENGINES CLEAR TO START" (S) "STARTING NO.___" (P)	7. Engine No. ____ - START (E)	2. Clear to Start Engines - "ENGINES CLEAR TO START" (S)

PILOTS

Prior to starting each engine, the pilot shall state "STARTING NO.____." The engine starter button shall not be engaged prior to receiving the scanner's "ENGINES CLEAR TO START" report.

Note

The copilot will monitor starting of each engine and advise the pilot if any limits are exceeded.

a. Starter Button - IN (P)

Discontinue the start if the starter duty cycle, engine starting or operating limits are exceeded.

b. Fuel and Start Ignition Switch - RUN (P)

When N_2 reaches 11 percent, place the Fuel and Start Ignition Switch to the RUN position.

During start, if fuel flow exceeds 700 PPH before light-off discontinue the start.

If there is no oil pressure by N_2 idle RPM shut down the engine. If there is no indication of light-off within 30 seconds after the

Fuel and Start Ignition switch is placed to RUN or the start is discontinued after light-off, move the Fuel and Start Ignition switch to STOP and motor the engine for 30 seconds, then pull the Starter button out.

If the Starter button does not pop out by N_2 idle RPM, pull it out. If the flight engineer advises that the start valve open light has not gone off by idle RPM, shut down the engine.

If there is no indication of N_1 RPM do not advance the throttle beyond IDLE. Continue operating engine for 5 minutes maximum. If N_1 RPM still does not indicate rotation, shut down the engine and investigate the cause of malfunction.

FLIGHT ENGINEER

Note

When starting an engine, the manifold bleed air pressure should not be less than 13 PSI after the starter valve is open and pressure has stabilized.

As the engine is started, monitor:

a. Engine Instruments - NORMAL

Note

Advise the pilot if no oil pressure indication is observed.

b. Start Valve Open Light - CHECKED

If the start valve open light does not go off by N_2 idle RPM, advise the pilot and close the engine bleed valve and pressure augmentor valve.

c. Generator - CHECKED

If CSD fail light does not go off by N_2 idle RPM, disconnect the CSD.

Check that the gen out lights go off and the bus tie light comes on as the engine accelerates to N_2 idle RPM. When the engine stabilizes at N_2 idle RPM, check generator voltage and frequency.

d. Hydraulic Pumps - NORM

Place the Bot Hydraulic Pump switch to NORM after the engine stabilizes at N_2 idle RPM.

e. Hydraulic Pressure - CHECKED

Check that the hydraulic pressure is within limits and that the boost press low and pump press low lights are off.

f. PTUs - AS REQUIRED

Check hydraulic system pressures.

LOADMASTER/SCANNER

The scanner shall respond with the engine clearance when receiving challenge "ENGINES CLEAR TO START." No further scanner response is required prior to starting remaining engines. The scanner shall report any apparent malfunction.

PILOTS	FLIGHT ENGINEER	LOADMASTER/SCANNER
c. Engine Instruments and Warning Lights - CHECKED (P,CP)	g. Repeat above procedure except item f for remaining engines.	
3. Continuous Ignition - "ON" (P)	**Note** If only the inboard engines are being started, steps 8 and 9 need not be performed.	
	h. Engine Anti-ice Switch - AS REQUIRED When temperatures are below 8°C and visible moisture is present, turn on engine anti-icing to preclude ice buildup during ground operation.	
	8. APU/EXT PWR Selector Switch - OFF	
	9. APU Generator Selector Switch - OFF	
	Check that all bus tie open lights are off.	
	10. Remove External Power - "REMOVING EXTERNAL POWER" (S) If external power was used for engine start, the engineer shall direct the scanner to remove the power at this time.	3. Remove External Power - "REMOVING EXTERNAL POWER" (S)
4. Engineer's Report - "CHECK COMPLETED" (E)	10. Engineer's Report - "CHECK COMPLETED" (E)	
5. Operational Stop Starting Engines Check - "COMPLETED" (CP)		
Refer to BEFORE TAXI CHECKLIST		

ENGINE SHUTDOWN.

PILOTS	FLIGHT ENGINEER	SCANNER
1. Brake Switch - "EMER" (CP) The copilot shall check for proper brake pressure.	1. Fuel Boost Pumps - OFF If an engine flames out or does not continue to operate normally when the fuel boost pumps are turned off, a malfunction exists.	
2. Parking Brake - "SET" (P)		

PILOTS

CAUTION

When setting parking brakes, depress pedals firmly. The pedals should have a positive resistance and should not spring back after the parking pawl is engaged.

The parking brake accumulator pressure may be depleted rapidly after the parking brakes are set unless the number 4 hydraulic system is continuously pressurized. Chocks shall be installed prior to turning off the selected hydraulic pressure.

3. Scanner Cleared to Depart Airplane - "DEPARTING AIRPLANE" (S)

4. Nacelle and Pylon Inspection - "COMPLETED" (S)

5. Continuous Ignition - "OFF" (P)

6. Fuel and Start Ignition - "STOP" (P)

   Place throttle to IDLE prior to this action.

CAUTION

Allow the engine to idle at least five minutes before shutdown (taxi time may be included if N_2 rpm does not exceed 76%). This idling period allows the engine to cool slowly to prevent possible damage resulting from rapid temperature changes.

FLIGHT ENGINEER

2. MADAR - SHUT DOWN

   Accomplish only if engines are to be shut down. Use the instructions contained on the DRU film frames. If the DRU is inoperative or the film pack is outdated, complete the following substeps.

   a. Flight Report - PRINTED (1000021)

   b. Standby Mode - SELECTED (1000001)

   c. Film Display Pushbutton - DEPRESSED

   d. MADAR Pushbutton - DEPRESSED

   e. MDR Pressure Rollers - RELEASED

   f. POU Printout Tape - ATTACH TO FORM 781A

Note

If POU is inoperative, manually extract failed LRUs and enter in Form 781A.

3. Power Selector Switch - AS REQUIRED

4. PTUs - OFF

5. Floor Heat Switch - OFF

Note

Do not turn on the floor heat system during operation of the ATMs after the engines are shut down. Insufficient bleed air pressure can cause one or both ATMs to stall out if simultaneous operation of both systems is attempted.

6. Recirc Fan Switch - OFF

7. Sys No. 1 and No. 4 Hydraulic Boost Pumps - AS REQUIRED

   If the ATMs are to be turned on, turn on the hydraulic boost pumps.

LOADMASTER/SCANNER

1. Scanner Cleared to Depart Airplane - "DEPARTING AIRPLANE" (S)

2. Nacelle and Pylon Inspection - "COMPLETED" (S)

CAUTION

Prior to shutdown, visually inspect all nacelles and pylons for fluid leaks. Remain on interphone and observe each engine for leaks during shutdown.

PILOTS	FLIGHT ENGINEER	SCANNER
Note During single APU operation or operation with APU generator power not available, the No. 1 or No. 2 engine shall be left running until external power is connected and selected by the flight engineer. If external power is not available, a fire truck must be standing by.	8. ATMs - AS REQUIRED **CAUTION** During ATM operation, a qualified operator must be on the flight deck to monitor ATM operation. During start of an ATM, if normal hydraulic pressure is not observed within 15 seconds, shut down the ATM. If, during operation of an ATM, a complete loss of hydraulic pressure is experienced in that system or the ATM pump pressure light goes out, shut down the affected ATM and do not attempt to restart it.	
7. Navigation and Anti-collision Lights - "FLASH AND OFF" (CP)	9. Fuel Valves - CLOSED	
8. Windshield Heat - "OFF" (CP)	10. Engine Anti-ice - OFF	
9. Seat Belt Light - "OFF" (CP)	11. Ice Detector - OFF	
10. Flight Augmentation - "OFF" (P)	12. Engineer's Report - "CHECK COMPLETED" (E)	
11. Navigator's Report - "CHECK COMPLETED" (N)		
12. Engineer's Report - "CHECK COMPLETED" (E)		
13. ADI 1 Circuit Breaker - "OPEN" (P)		
14. Emergency AC Bus Instrument Ground Switch - "OFF" (P)		
15. Engine Shutdown Check - "COMPLETED" (CP)		

BEFORE LEAVING AIRPLANE.

Configure the airplane as required for unloading loading operations. After the scanner completes his checks, he will visually check the exterior of the airplane for obvious damage or discrepancies.

PILOTS	FLIGHT ENGINEER	SCANNER
1. Emergency Exit Lights - "DISARM" (CP)	1. Air Cond Master switch - OFF	
2. PACS Pitch and Roll Switches - "OFF" (P)	2. Outflow Valves - AS REQUIRED	

PILOTS	FLIGHT ENGINEER	SCANNER
3. AFCS Master Power - "OFF" (CP)	Close the outflow valves with the manual system if airplane is to be left parked for an extended period, parked in inclement or anticipated inclement weather.	
4. Oxygen Regulators - "100% AND OFF" (CP, P)	3. ATMs - OFF	
5. Stallimiter System - "OFF" (CP, P)	4. Sys No. 1 and No. 4 Hydraulic Boost Pumps - OFF	
6. Radios and IFF - "OFF, CODES REMOVED" (CP) If classified codes have been inserted, the copilot will ensure that they are removed.	5. Bleed Air Manifold Check - COMPLETED Close the left and right APU bleed valves. Check that bleed air manifold pressure bleed down time for a 15 PSI drop is no less than 40 seconds. Pressure at initiation of check must be 30 PSI or above. If bleed down time is excessive when start pressure is above 30 PSI, recheck to insure bleed down time from 30 to 15 PSI is no less than 40 seconds.	1. Scanner's Report - "CHOCKS AND NOSE GEAR PIN IN PLACE" (S)
7. Scanner's Report - "CHOCKS AND NOSE GEAR PIN IN PLACE" (S)	6. Instrument Ground Switches - OFF Do not proceed to next step until the navigator has coordinated the Instrument Ground switches with the pilot. If a navigator is not on board, the flight engineer must turn off the navigators Instrument Ground switches.	
8. Parking Brake - "OFF" (P)	7. APU/EXT PWR Selector Switch - AS REQUIRED	
9. Interior and Exterior Lights - "SET" (CP, P)	8. APU Generator Selector Switch - AS REQUIRED	
10. Cargo Door System - "ARMED AS REQUIRED" (CP, N, LM) **CAUTION** If the IDNE is to be turned off after landing, do not rotate the Mode Select switch to OFF until the airplane has stopped moving. Coordination will be required among the Copilot, Navigator, and Loadmaster prior to arming the forward cargo door system. Movement of the visor within 5 minutes after turning off the IDNE may damage the IMU.	9. APU - AS REQUIRED	
	10. Battery Switch - AS REQUIRED Assure DC Voltmeter selector is in other than NORM BATT or STBY BATT position.	

PILOTS	FLIGHT ENGINEER	SCANNER
	Note The Battery switch must be turned off after APU and external power are removed from the airplane to prevent complete battery discharge.	
	11. Oxygen Regulators - 100% AND OFF Ensure that the engineer's and relief crew bunk area regulators are 100 percent and off.	
11. Yellow Circuit Breakers - "OPEN" (P) Open all circuit breakers painted yellow on the pilot's emergency circuit breaker panel.	12. Yellow Circuit Breakers - OPEN Open all circuit breakers painted yellow on the flight engineer's circuit breaker panels.	
	CAUTION Do not open circuit breakers that are painted red. These are the touchdown circuit breakers and should be left closed.	

PILOTS	FLIGHT ENGINEER	SCANNER
	If a navigator is not on board, the flight engineer will open the circuit breakers painted yellow on the navigator's circuit breaker panels.	
	13. FSS Cargo Volume Selector Switch - AS REQUIRED (FSS INSTALLED) On airplanes modified by T.O. 1387, if cargo is to be unloaded, select UNDER 10,000 CU FT. If cargo is to remain aboard, leave the switch in its existing position.	
12. Engineer's Report - "CHECK COMPLETED" (E)	14. Engineer's Report - "CHECK COMPLETED" (E)	
13. Before Leaving Airplane Check - "COMPLETED" (CP)		

Note

If any limit prescribed in these sections is exceeded, appropriate entry will be made in the Form 781 to include, but not limited to, times or duration, specific instrument readings, or limitations exceeded.

Note

There is a requirement to record additional data not already available in the AFTO 781 Series Forms. These records will be entered in Block 11 (Remarks) on the Form 781.

1. Landing Gear Cycles (LGC) - Recorded for landing gear engineering evaluations.

   a. Record each landing gear cycle (LGC - Any inflight retraction and extension cycle of the landing gear.) (e.g. 6LGC)

Note

The following Form 781 entries are required only if the MADAR is inoperative or determined to be unreliable. When required, these Block II entries will be preceded by the notation "MADAR INOP".

2. Engine Cycle (EC) - Recorded for determining fatigue life for engine compressor and turbine disks.

   a. An Engine Cycle is defined as follows: (1) Any flight (i.e. Take-off and full stop landing) regardless of its duration; (2) a touch-and-go landing; and (3) each power change, for other reasons during flight, equal to or greater than idle-to-normal rated EPR.

   b. Record each power change during flight equal to or greater than idle-to-normal rated EPR except those occurring during take-off and full stop landing or during a touch-and-go landing. (e.g., No. 1 Eng ____ EC, etc)

3. Equivalent Power Cycle (EPC) - Recorded on airplanes not modified by T.O. 1333 for compliance with T.O. 1C-5A-6 pylon inspection.

   a. Record total number of go-arounds where an EPR of 3.0 or greater is set.

   b. Record total number of ground engine accelerations to an EPR setting of 3.0 or greater (take-off power setting excluded). (e.g., 4 go-arounds; No. 1 Pylon 2 ground Eng. accel., etc)

TOLD CARD WORKSHEET

TAKE-OFF CONDITIONS

GW _____ CG _____ OAT _____ °C PA _____ ELEV _____ WIND-DIR _____

VEL _____ OBST-HT _____ DIST _____ RWY-HDG _____ RA _____

SLOPE _____ RCR _____ RSC _____ T/O FLAP _____ %

COMPUTATIONS

TRT-STAT _____ MIN-STAT _____ TRT-IF _____ REV LIM _____

REDUCED T/O STAT: RA _____ GRAD _____ T/O STAT _____ CHECK TIT _____ T/O IF _____

X-WIND _____ COMP _____ CALC _____ GUST _____ GPN _____ APN _____

ROT INC _____ CFL _____ $GW_{(CFL)}$ _____ $GW_{(3\ ENG)}$ _____

$GW_{(OBST)}$ _____ V_{MCG} _____ V_R _____ V_{ROT} _____ $V_{B(MAX)}$ _____

$V_{MCA(I)}$ / SHAKER _____ T/O GR RUN _____ ACCL-CK KTS _____ SEC _____

STAB _____ V_{MCO} _____ V_{MFR} _____ H_{MFR} (4 ENG) _____ X WIND T/O GR _____

EMERGENCY RETURN

V_{APP} _____ $V_{G/A}$ _____ TIRE LIMIT SPEED _____ FLARE _____

RCF _____ X-WIND LDG GR _____ ROLL _____

LDG DIST _____

DESTINATION CONDITIONS

OAT _____ °C PA _____ RWY-HDG _____ LGTH _____

RCR _____ SLOPE _____ % WIND-DIR _____ VEL _____

COMPUTATIONS

GW _____ TRT-IF _____ REV LIM _____ X-WIND _____ COMP _____ CALC _____

GUSTS _____ V_{APP} _____ $V_{G/A}$ _____ TIRE LIMIT SPEED _____ RCF _____ FLARE _____

X-WIND LDG POS _____ V_{MCA} (_____)/SHAKER _____ V_{MFR} _____ ROLL _____

LDG DIST _____

C5A-1-XH/O-163

Figure 2-17.

TOLD CARD

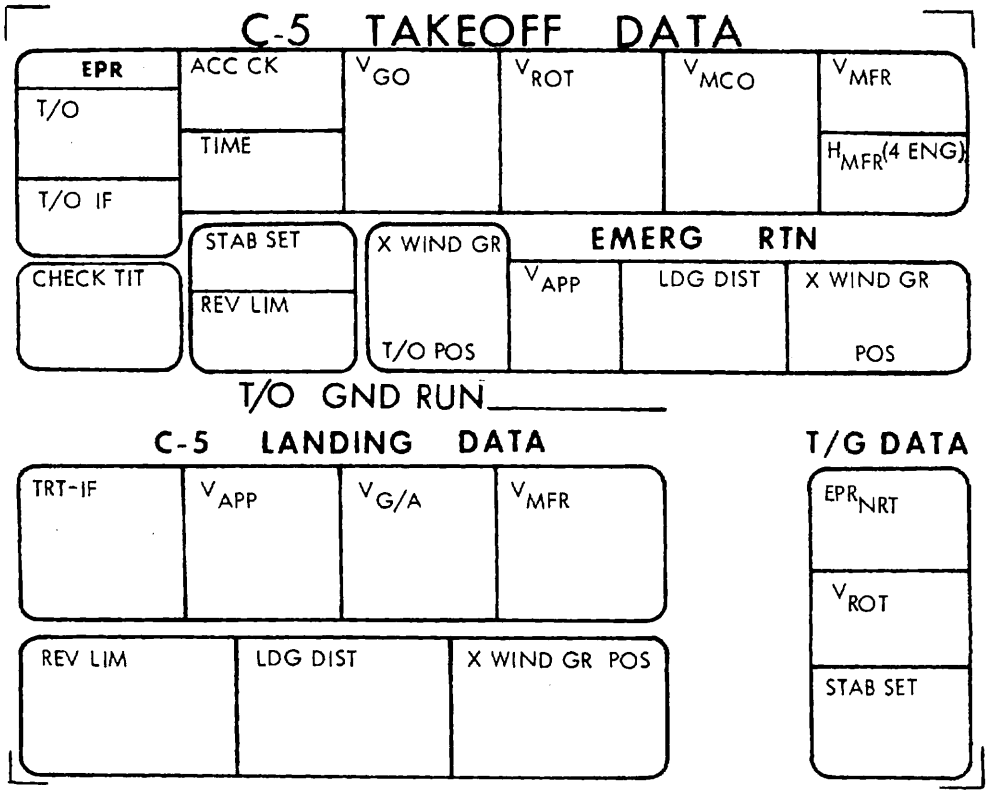

C5A-1-X4/0-164

Figure 2-18.

SECTION III
EMERGENCY PROCEDURES

Table of Contents

INTRODUCTION 3-4

Crew Coordination 3-4
Emergency Signals 3-4
Fire 3-4
Engine Overheat 3-4
Engine Fire 3-4
Odors 3-4
Emergency Ground Evacuation 3-5
Crew Entrance Door Emergency Open . . . 3-5

GROUND OPERATION EMERGENCIES 3-5

Engine Fire on the Ground 3-19
Airplane Fire on the Ground (FSS INSTALLED) 3-20
PTU Compartment Fire (Crew in Place) (FSS INSTALLED) 3-20B
Auxiliary Power Unit Fire (Crew In Place) 3-20C
Auxiliary Power Unit Fire (Crew Not in Place) 3-22
Loss of Fluids - Visible or Indicated 3-23

TAKE-OFF EMERGENCIES 3-25

Factors Affecting Take-Off Decision 3-25
Abort Procedures 3-25
Engine Failure During Take-Off, Take-Off Continued 3-26
Engine Failure/Fire, Take-Off Continued 3-26

INFLIGHT EMERGENCIES 3-28

Engine Failure During Climbout - With Obstacle 3-28
Engine Failure During Enroute Climb. . . . 3-28
Engine Failure During Cruise 3-28
Driftdown 3-28
Visible or Indicated Loss of Fluids (Engine/Pylon) 3-28
Emergency Engine Shutdown 3-28
Precautionary Engine Shutdown 3-30
Four-Engine Flameout 3-31
Air Start 3-33
Auxiliary Power Unit Inflight Starting. . . . 3-34
Inflight Auxiliary Power Unit Compartment Fire 3-35
Inflight PTU Compartment Fire (FSS INSTALLED) 3-36
Practice Maneuvers With One or More Engines Inoperative. 3-36
Fires and Overheating 3-36A
Smoke and Fume Elimination 3-44
Bleed Air Smoke Elimination 3-47
Bailout Procedure 3-48
Emergency Descent 3-49
Emergency Depressurization 3-49
Inflight Door Warning 3-49
Rapid Decompression 3-51
Windshield Impairment 3-51
Fuel Jettison. 3-52
Cargo Jettison Procedures 3-53
Thrust Reverser Failure 3-59

LANDING EMERGENCIES 3-59

No Flap Landings. 3-59
No Slat Landings 3-60
Landing With One or More Engines Inoperative 3-60
Go-Around With One or More Engines Inoperative 3-60
Landing With One or More Main Gear Retracted 3-60
Landing With Nose Gear Retracted 3-61
Landing With Flat Tire 3-61
Wheels Up Landing 3-66
Landing Gear Failure 3-67
Brake System Failure 3-77
Ditching 3-78

SYSTEMS EMERGENCIES 3-91

Annunciator Panels 3-91
Engines 3-94
Flight Controls System Failures 3-95
Flight Control Hydraulic Power Failure 3-96
Pitot-Static System Isolation Procedure. . 3-100
Flap and Slat System Failure 3-101
Spoiler Ratio Shifter Failure 3-101
Hydraulic System Failure 3-102
Electrical Power System Failure 3-107
Fuel System Failure 3-109
Fuel Tank Inerting System Failure 3-112
Radome Failure 3-112

ANTI-SKID SYSTEM INOPERATIVE PROCEDURES 3-113

THREE ENGINE FERRY PROCEDURES . . 3-113

Flight Crew Procedures 3-114
Hydraulic System Review 3-114
Before Electrical Power-On Check 3-114
Interior Inspection 3-114
Before Starting Engines 3-114
Before Take-Off 3-114
Take-Off 3-114
Engine Failure During Take-Off 3-115
After Take-Off Climb 3-116
After Gear Retraction 3-116
Engine Failure During Climb 3-116
Cruise 3-116
Before Landing 3-116

EMERGENCY EQUIPMENT

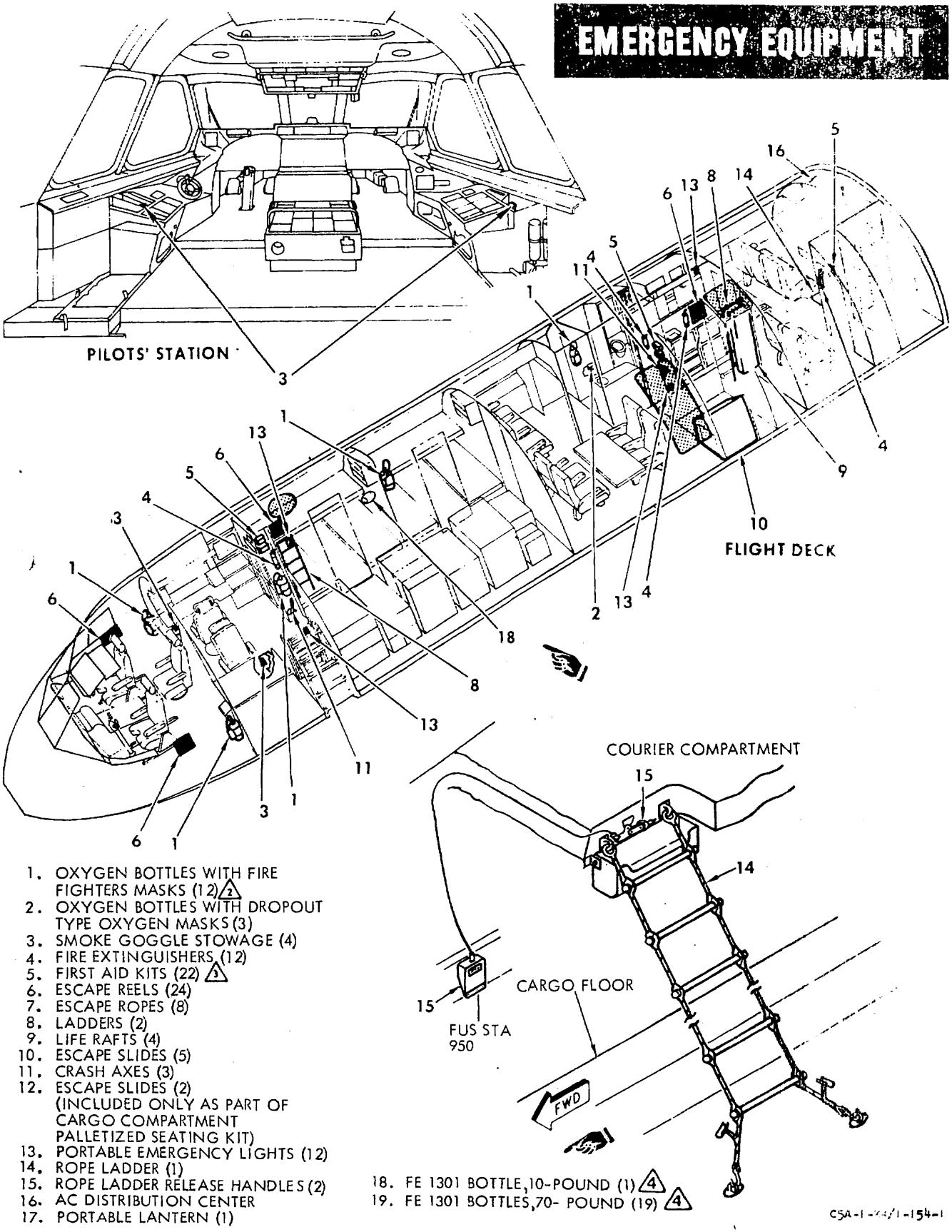

1. OXYGEN BOTTLES WITH FIRE FIGHTERS MASKS (12) 2
2. OXYGEN BOTTLES WITH DROPOUT TYPE OXYGEN MASKS (3)
3. SMOKE GOGGLE STOWAGE (4)
4. FIRE EXTINGUISHERS (12)
5. FIRST AID KITS (22) 3
6. ESCAPE REELS (24)
7. ESCAPE ROPES (8)
8. LADDERS (2)
9. LIFE RAFTS (4)
10. ESCAPE SLIDES (5)
11. CRASH AXES (3)
12. ESCAPE SLIDES (2) (INCLUDED ONLY AS PART OF CARGO COMPARTMENT PALLETIZED SEATING KIT)
13. PORTABLE EMERGENCY LIGHTS (12)
14. ROPE LADDER (1)
15. ROPE LADDER RELEASE HANDLES (2)
16. AC DISTRIBUTION CENTER
17. PORTABLE LANTERN (1)
18. FE 1301 BOTTLE, 10-POUND (1) 4
19. FE 1301 BOTTLES, 70- POUND (19) 4

C5A-1-[illegible]-154-1

Figure 3-1. (Sheet 1 of 2)

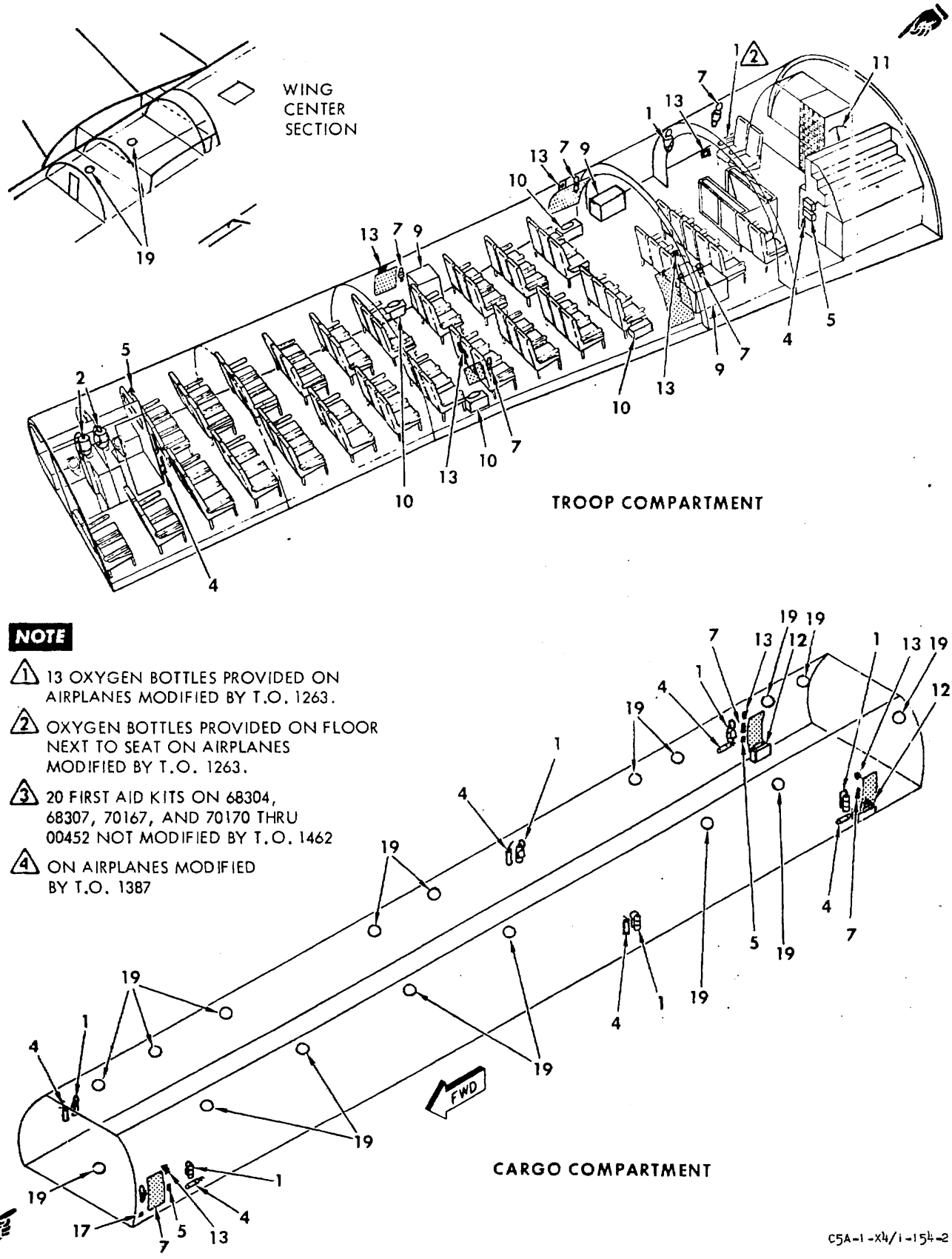

NOTE

1. 13 OXYGEN BOTTLES PROVIDED ON AIRPLANES MODIFIED BY T.O. 1263.
2. OXYGEN BOTTLES PROVIDED ON FLOOR NEXT TO SEAT ON AIRPLANES MODIFIED BY T.O. 1263.
3. 20 FIRST AID KITS ON 68304, 68307, 70167, AND 70170 THRU 00452 NOT MODIFIED BY T.O. 1462
4. ON AIRPLANES MODIFIED BY T.O. 1387

Figure 3-1. (Sheet 2 of 2)

INTRODUCTION.

The procedures contained in this section are considered the best for coping with the various emergencies that may be encountered during operation of this airplane. Only single failures are considered; however, each failure presents a different problem. A crew with a thorough knowledge of these procedures will be better able to cope with the problems encountered. The procedures presented in BOLD FACE TYPE are the procedures that a crew member must be able to accomplish without reference to the checklist as the time factor in an emergency of this type will not allow use of a checklist except as a cleanup reference. Even though the procedures in this section are considered the best possible, the pilot must use sound judgment when confronted with multiple emergencies, adverse weather, terrain clearance, etc. Refer to figure 3-1 for the location of emergency equipment.

CREW COORDINATION.

An emergency requires the full coordinated effort of each crew member to correct the condition. Emergency checklist items shall be called for and accomplished in sequence. After the pilot, copilot, and engineer complete the BOLD face items and the pilot calls for the emergency checklist, the copilot shall silently review the BOLD print items for the pilot, call out any that were missed, and complete the remaining items by challenge and response. All other crew members shall review the BOLD face reference when completing their checklist. A crew member noting an engine fire or failure should announce location over interphone. EXCEPTION: During takeoff, any crew member noting malfunction affecting safety of flight prior to GO speed should call out the word "REJECT" only. The final decision to reject shall be made by the pilot. During any emergency, the pilot shall notify the crew and troops of the emergency and the copilot shall notify all others concerned, such as ground control, tower, etc.

The pilot and copilot will have to use the interphone if they wish to talk to crew members other than the flight engineer or navigator since the others can not hear transmissions on hot mic.

Since simultaneous transmission on both the interphone and public address systems is not possible to all stations, two separate transmissions are required to alert/brief personnel.

Note

If an emergency occurs when the pilot or copilot are not aboard the airplane, the flight engineer or loadmaster shall take action as required to ensure that emergency equipment is requested, applicable fire protection equipment is activated (fire handles/fire extinguishers), and all personnel are evacuated.

EMERGENCY SIGNALS.

When an emergency arises, the crew and passengers should be notified of the nature of the emergency and intended action. The following warning horn signals are used when abandoning the airplane or during a crash landing or ditching:

a. Ground evacuation - One long sustained blast.

b. Ditching or crash landing immediately after takeoff - One long sustained blast.

c. Prepare for ditching or crash landing - Six short blasts.

d. Brace for impact - One long sustained blast.

e. Prepare to bailout - Three short blasts.

f. Bailout - One long sustained blast.

g. For immediate bailout, the pilot shall sound the warning horn and transmit "BAILOUT, BAILOUT, BAILOUT," over the PA system.

FIRE.

A fire in any part of the airplane during any phase of operation is an emergency and requires immediate attention. If a fire is discovered by a crew member, he should notify the pilot immediately.

ENGINE OVERHEAT.

An engine overheat is indicated by a flashing overheat light on the pilots' center instrument panel and a flashing fire light on the flight engineer's console.

ENGINE FIRE.

Each engine nacelle is equipped with a fire detection system. An engine fire is indicated by a steady light in the associated engine fire emergency control handle, and also by a steady overheat light on the pilots' center instrument panel and a steady fire light on the flight engineer's console.

ODORS.

All odors not identifiable by the flight crew shall be considered toxic. Immediately use 100 percent oxygen, properly ventilate the airplane, and land as soon as practicable. Do not take off when unidentifiable odors are detected.

EMERGENCY GROUND EVACUATION.

See figure 3-2 for emergency exits, and figure 3-3 for emergency entrances. See figure 3-4 for emergency routes of evacuation, and figure 3-5 for emergency evacuation. See figure 3-6 for emergency escape slide deployment, and figure 3-7 for operation of emergency escape descent reels.

Note

Ground evacuation routes shown in figure 3-5 are primarily for crash landing. All other conditions requiring rapid egress shall be directed by the pilot/responsible crewmember.

CREW ENTRANCE DOOR EMERGENCY OPERATION.

For emergency operation of the crew entrance door, proceed as follows:

a. Remove the mechanical lock from the door lock actuator on 70168, 00449 and airplanes modified by T.O. 1476.

b. Pull down on the crew entrance door emerg egress handle.

c. Push out on crew entrance door.

WARNING

When the door is opened using the emergency egress handle, the crew door entrance ladder will not fully extend. The end of the ladder may be as much as five feet above the ground.

GROUND OPERATION EMERGENCIES.

In the event of a ground operation emergency not covered by a separate checklist, the pilot, flight engineer, scanner and/or loadmaster will accomplish the following:

PILOT

The pilot shall:

a. If wheel chocks are not in place, ensure that the parking brake is set with emergency brakes selected. Have chocks installed if available.

b. Attempt to control the malfunction by isolating the affected system(s).

c. Direct crew members as required to fight fire or accomplish other duties as required, and open ground exits. The copilot will request fire fighting equipment, if required.

d. Shut down all systems not required to control the malfunction or to facilitate evacuation.

e. If required, direct evacuation, sound the warning horn and direct the shut down of all remaining systems.

FLIGHT ENGINEER

When directed by the pilot, the flight engineer shall:

a. Isolate affected systems.

b. Shut down all systems not required to control the malfunction or to facilitate evacuation.

c. Shut down all remaining systems and evacuate the airplane.

SCANNER/LOADMASTER

When directed by the pilot, the scanner/loadmaster shall:

a. Fight fire or accomplish other duties as required.

b. Open required ground exits.

c. Direct evacuation and evacuate the airplane.

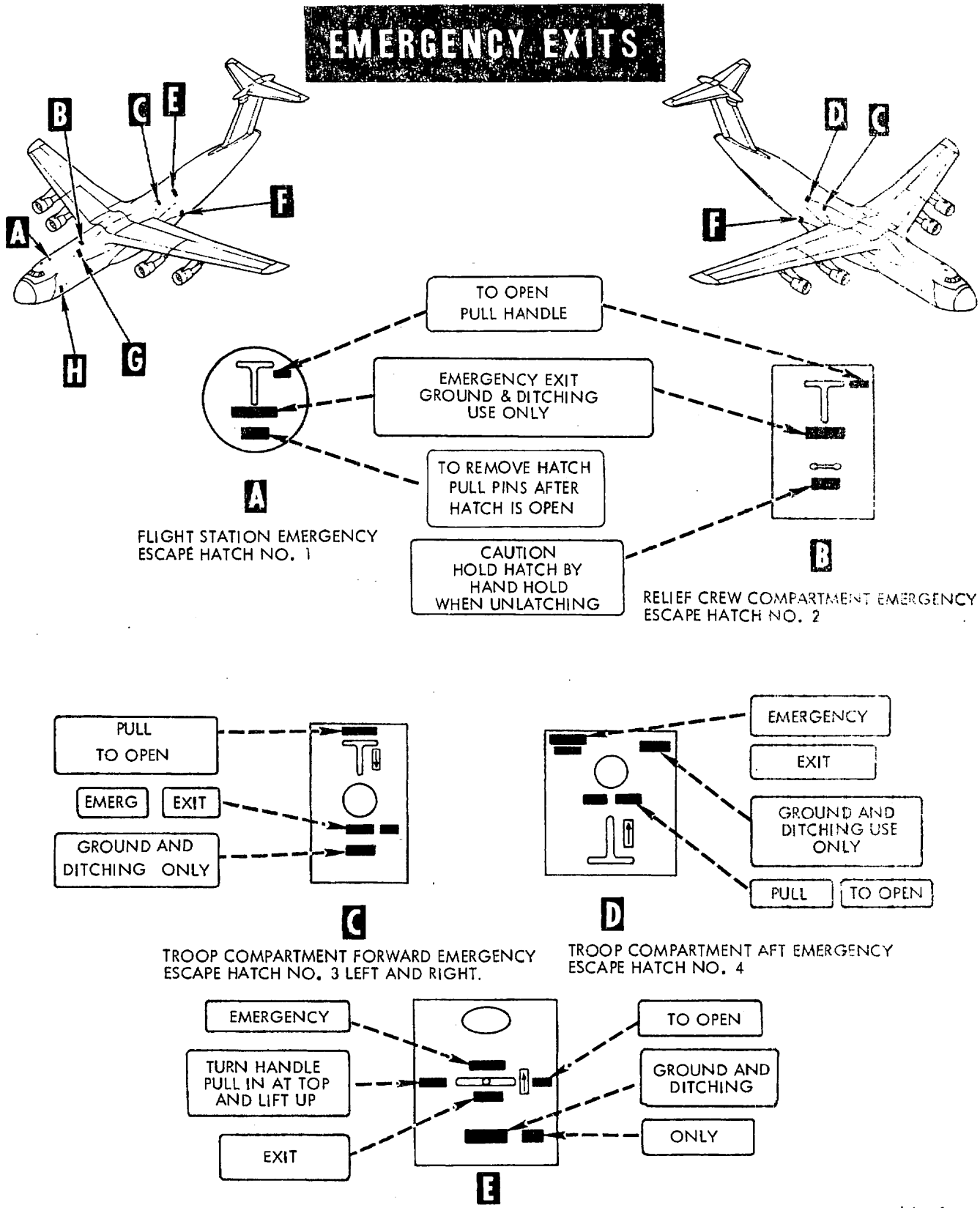

Figure 3-2. (Sheet 1 of 2)

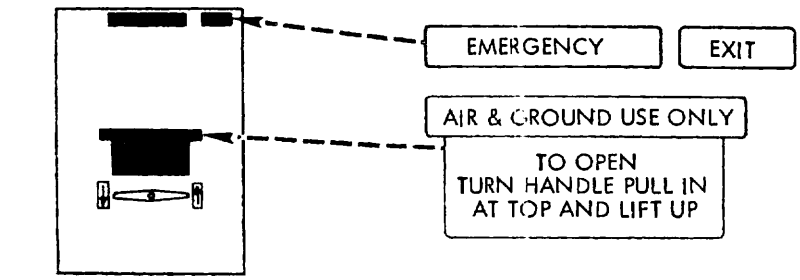

F

CARGO COMPARTMENT AFT
TROOP DOORS

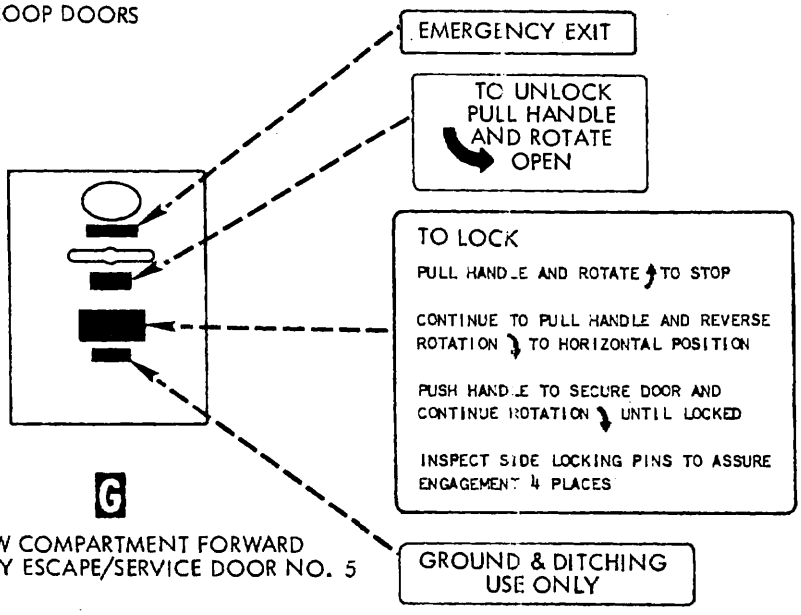

G

RELIEF CREW COMPARTMENT FORWARD
EMERGENCY ESCAPE/SERVICE DOOR NO. 5

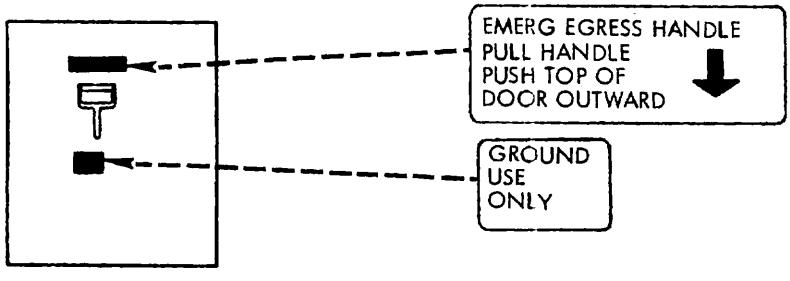

H

CREW ENTRANCE DOOR

C5A-1-X3/0-165-2

Figure 3-2. (Sheet 2 of 3)

EMERGENCY ENTRANCES

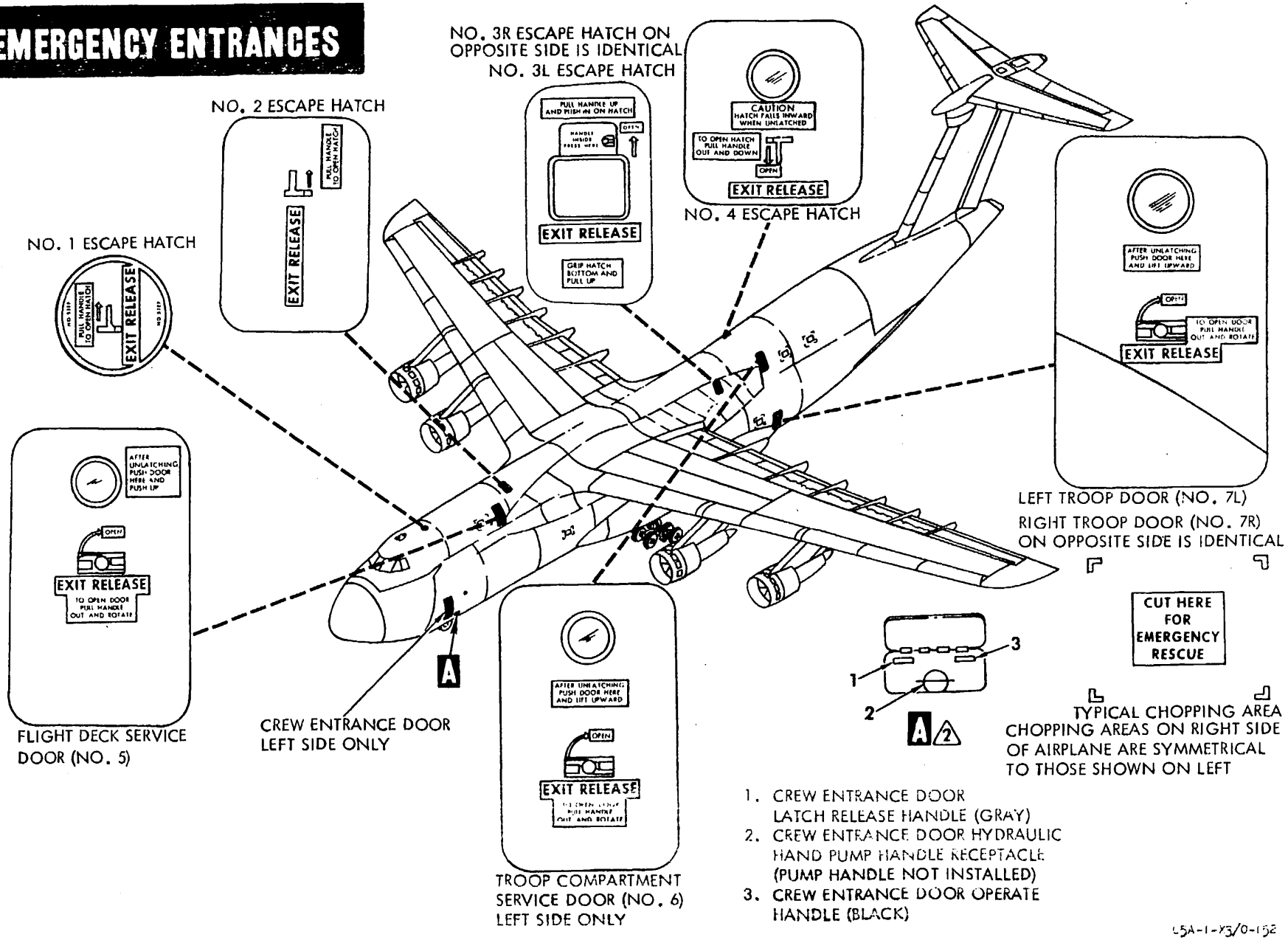

Figure 3-3.

EMERGENCY ROUTES OF EVACUATION

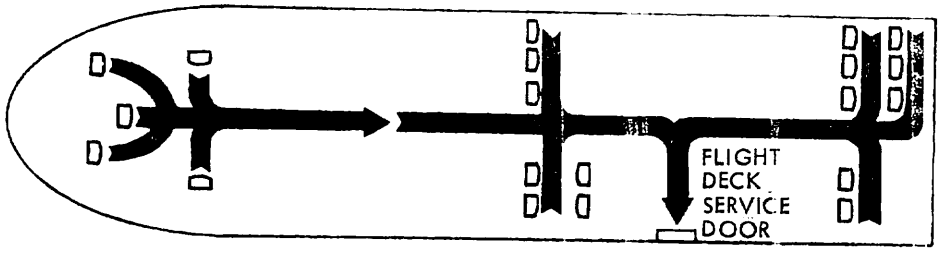

FLIGHT DECK (GROUND EVACUATION)

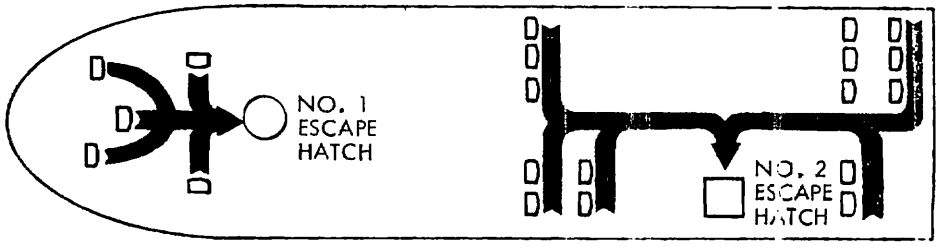

FLIGHT DECK (DITCHING EVACUATION)

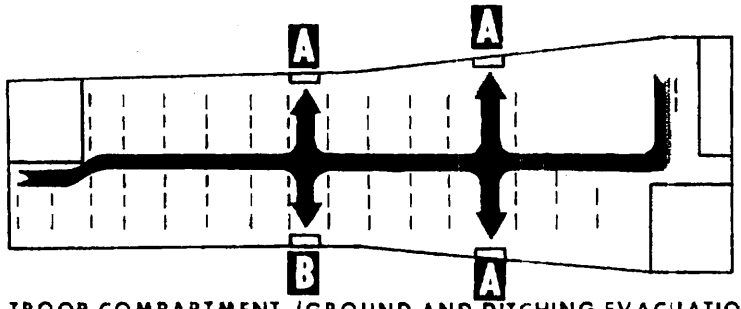

TROOP COMPARTMENT (GROUND AND DITCHING EVACUATION)

A PRIMARY EXIT FOR GROUND AND DITCHING EVACUATION

B PRIMARY EXIT FOR GROUND EVACUATION.
SECONDARY EXIT FOR DITCHING EVACUATION.

C5A-1-1-166

Figure 3-4.

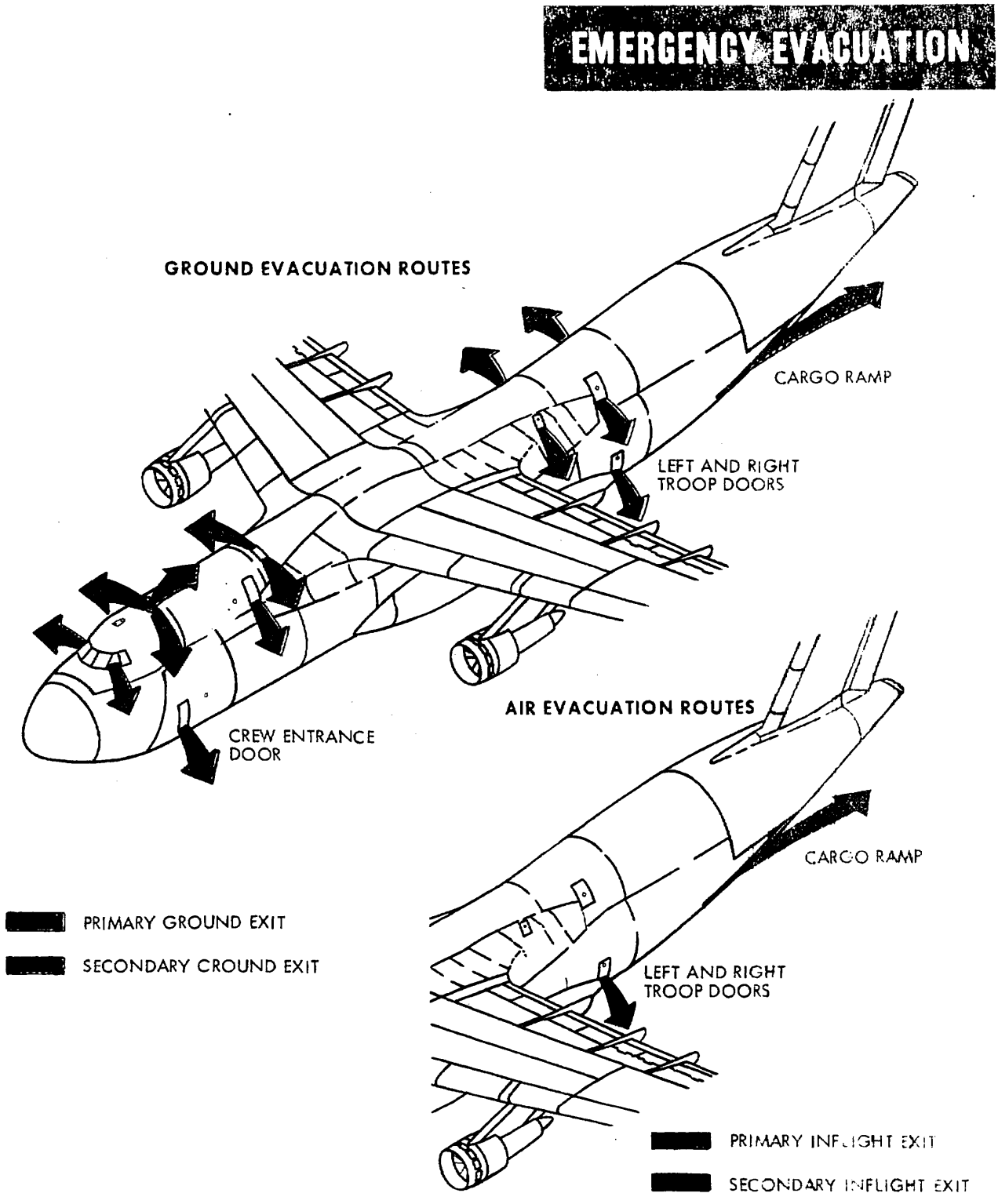

Figure 3-5. (Sheet 1 of 2)

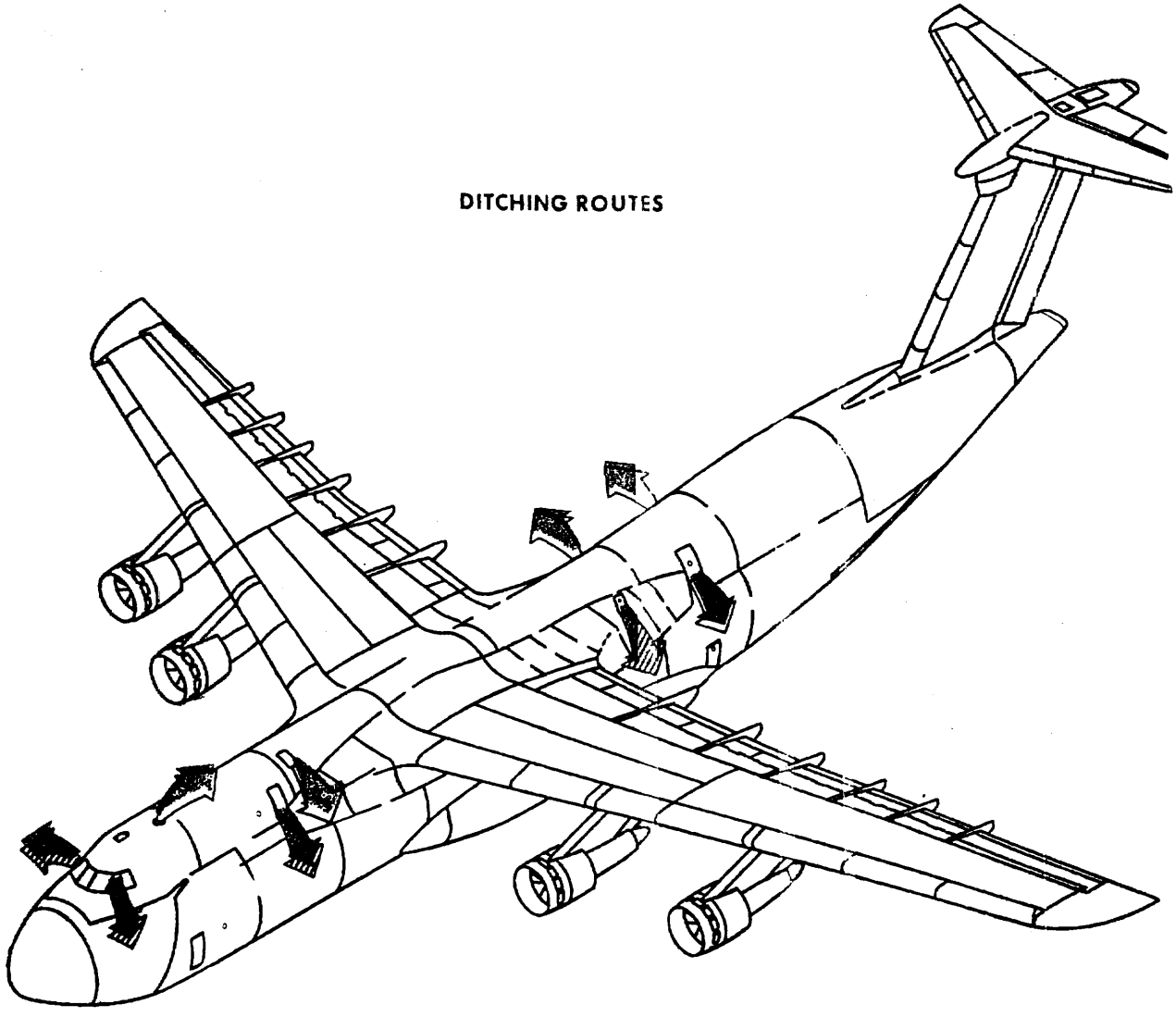

C5A-1-6-158-2

Figure 3-5. (Sheet 2 of 2)

ESCAPE SLIDE DEPLOYMENT SEQUENCE (TYPICAL)

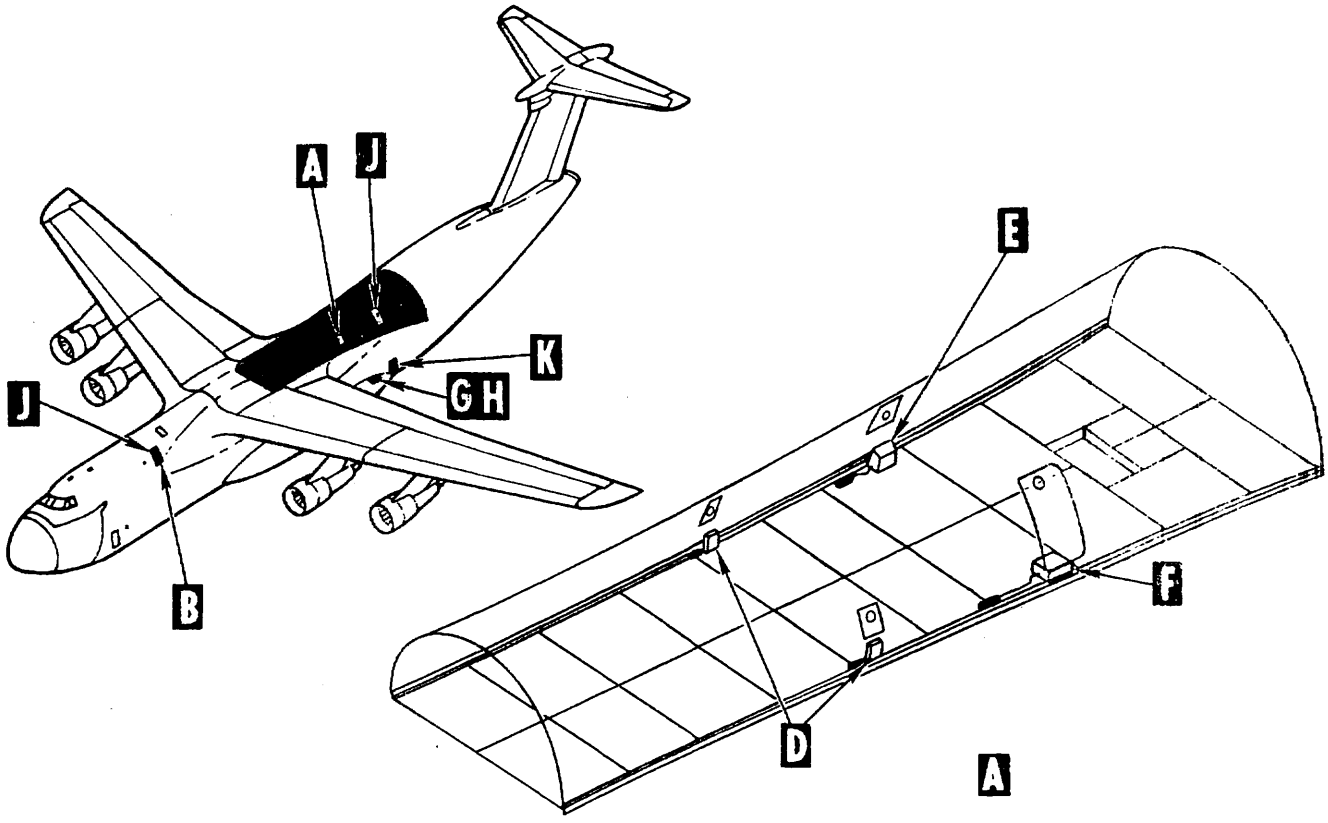

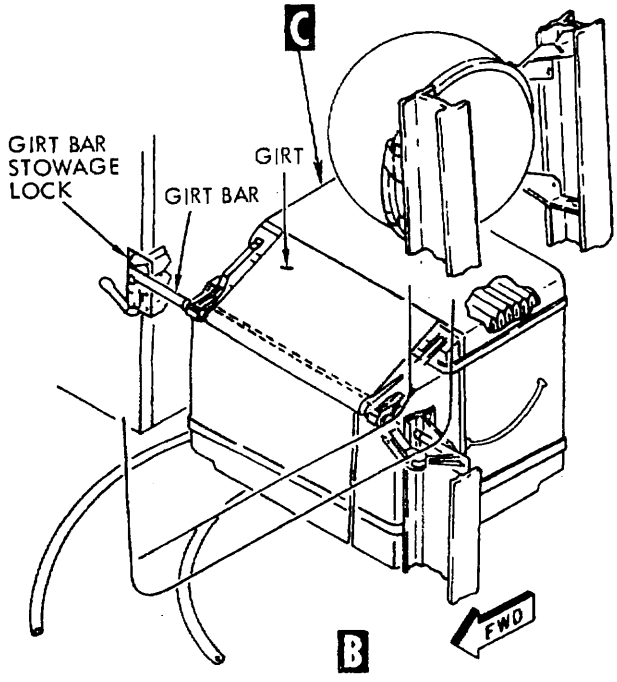

RELIEF CREW COMPARTMENT
ESCAPE SLIDE STOWAGE

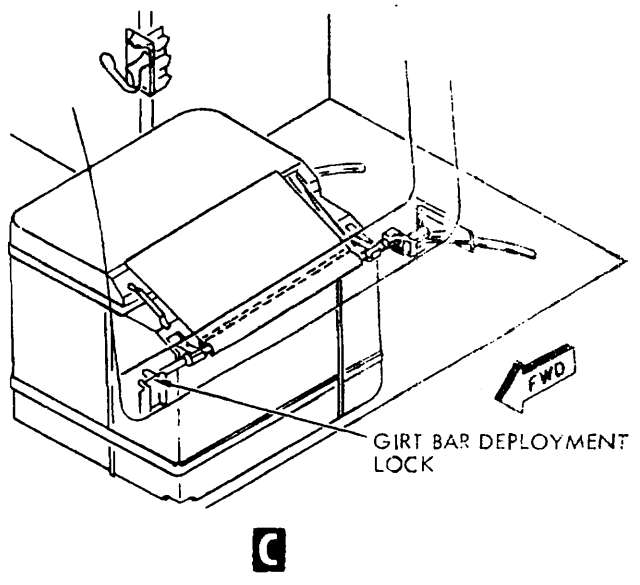

ESCAPE SLIDE DEPLOYMENT POSITION -
RELIEF CREW COMPARTMENT

Figure 3-6. (Sheet 1 of 5)

ESCAPE SLIDE DEPLOYMENT PROCEDURE FOR DETAIL B

NOTE

RELIEF CREW COMPARTMENT ESCAPE SLIDE IS STOWED IN A RECESSED AREA IN THE BAGGAGE COMPARTMENT.

1. UNLOCK THE GIRT BAR FROM THE STOWED POSITION.
2. GRASP THE GIRT BAR AND ROTATE THE STOWAGE CASE UNTIL IT COMES TO REST UNDER THE EXIT DOOR SILL.
3. PUSH GIRT BAR INTO THE LOCKING ASSEMBLY ON THE RIGHT SIDE OF THE DOOR SILL.
4. GRASP THE ASSIST HANDLES ON THE STOWAGE CASE AND ROTATE THE CASE 90 DEGREES TO POSITION IT OVER THE DOOR SILL.
5. PUSH THE STOWAGE CASE OUT OF THE EXIT DOOR. AS THE CASE LEAVES THE GIRT BAR, IT WILL SPLIT AND THE ESCAPE SLIDE WILL START UNFOLDING AND FALL TO THE GROUND. AS THE CASE FALLS, AUTOMATIC INFLATION WILL START.
6. IF THE CASE DOES NOT SPLIT, OR THE SLIDE DOES NOT INFLATE, ACCOMPLISH THE FOLLOWING:
   A. PULL ON THE RED WEBBING HANDLE MARKED "PULL TO INFLATE." THE CASE SHOULD SPLIT AND THE SLIDE INFLATE. IF THE CASE STILL DOES NOT SPLIT OR THE SLIDE DOES NOT INFLATE, ACCOMPLISH STEP B.

   B. GRASP BOTH CABLES THAT PASS THROUGH THE RING AT THE END OF THE RED WEBBING HANDLE, SLIDE YOUR HAND AS FAR DOWN THE CABLES AS POSSIBLE AND THEN SHARPLY PULL THE CABLES. THE RETAINING STRAPS SHOULD PART, THE CASE SPLIT AND THE SLIDE INFLATE. IF THE SLIDE STILL FAILS TO INFLATE AND NO OTHER EXIT IS AVAILABLE FOR EGRESS, ACCOMPLISH STEP 7.
7. IF THE SLIDE FAILS TO INFLATE, THE SLIDE HALF-TIE RELEASE HANDLE MUST BE PULLED TO ALLOW THE END OF THE SLIDE TO FALL TO THE GROUND. FOUR PEOPLE MUST DESCEND USING THE EMERGENCY ESCAPE DESCENT REELS OR OTHER ALTERNATE MEANS AND BE STATIONED ON EACH SIDE OF THE SLIDE TO GRASP THE "NO FAIL" HANDLES, PULL TIGHT AND HOLD THE SLIDE AT WAIST HEIGHT. THE SLIDE CAN THEN BE USED AS AN APRON CHUTE. ADDITIONAL PEOPLE SHOULD BE USED (WHEN AVAILABLE) TO ASSIST IN STABILIZING THE CHUTE.

WARNING

DEPLOYMENT OF THE SLIDES DURING HEAVY GUSTY WIND CONDITIONS CAN CAUSE THE SLIDE TO POSITION ITSELF AT AN UNSAFE ANGLE RELATIVE TO THE FUSELAGE. IF THIS SITUATION OCCURS, A CREW MEMBER WHO HAS DESCENDED TO THE GROUND USING EITHER AN ESCAPE ROPE OR A DESCENT REEL SHALL PROCEED TO THE SLIDE DEPLOYMENT AREA AND STRAIGHTEN THE SLIDE SO THAT OTHER PERSONNEL CAN USE IT.

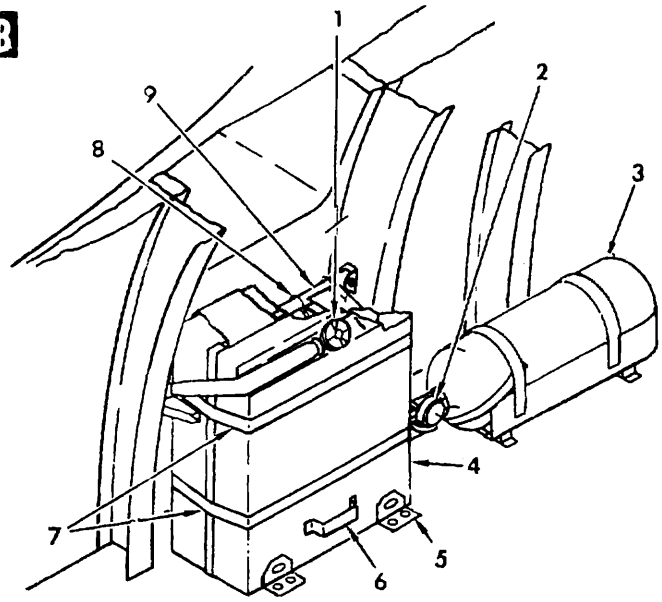

1. RETAINING STRAP QUICK RELEASE BUCKLE.
2. AIR RESERVOIR GAGE.
3. AIR RESERVOIR.
4. ESCAPE SLIDE CASE.
5. RESTRAINING CLIP.
6. ASSIST HANDLE.
7. ESCAPE SLIDE RETAINING STRAPS.
8. CASE SPLITTING AND INFLATION LANYARD ATTACHMENT RING.
9. GIRT BAR.

D

EMERGENCY SLIDE ASSEMBLY INSTALLED UNDER ESCAPE HATCHES 3L & 3R

ESCAPE SLIDE DEPLOYMENT PROCEDURE FOR DETAIL D

NOTE

1. TROOP COMPARTMENT ESCAPE SLIDES ARE STOWED AT EACH EXIT DOOR.
2. COMPONENTS SIMILAR ON ALL FOUR ESCAPE SLIDES IN THE TROOP COMPARTMENT.

1. RELEASE THE QUICK DISCONNECT BUCKLE.
2. USING THE ASSIST HANDLE(S), LIFT CASE STRAIGHT UP AND REST BOTTOM OF CASE ON SILL OF HATCH.
3. PUSH CASE OVERBOARD BY APPLYING FORCE TO THE UPPER EDGE OF THE CASE. THE CASE SHOULD SPLIT AND FALL. THE ESCAPE SLIDE SHOULD UNFOLD AND AUTOMATICALLY INFLATE AS IT FALLS TO THE GROUND.

C5A-1-X4/0-167-2

Figure 3-6. (Sheet 2 of 5)

4. IF THE CASE DOES NOT SPLIT, OR THE SLIDE DOES NOT INFLATE, ACCOMPLISH THE FOLLOWING:
   A. PULL ON THE RED WEBBING HANDLE MARKED "PULL TO INFLATE". THE CASE SHOULD SPLIT AND THE SLIDE INFLATE. IF THE CASE STILL DOES NOT SPLIT OR THE SLIDE DOES NOT INFLATE, ACCOMPLISH STEP B.
   B. GRASP BOTH CABLES THAT PASS THROUGH THE RING AT THE END OF THE RED WEBBING HANDLE, SLIDE YOUR HAND AS FAR DOWN THE CABLES AS POSSIBLE AND THEN SHARPLY PULL THE CABLES. THE RETAINING STRAPS SHOULD PART, THE CASE SPLIT AND THE SLIDE INFLATE. IF THE SLIDE STILL FAILS TO INFLATE AND NO OTHER EXIT IS AVAILABLE FOR EGRESS, ACCOMPLISH STEP 5.
5. IF THE SLIDE FAILS TO INFLATE, THE SLIDE HALF-TIE RELEASE HANDLE MUST BE PULLED TO ALLOW THE END OF THE SLIDE TO FALL TO THE GROUND. FOUR PEOPLE MUST DESCEND USING THE EMERGENCY ESCAPE ROPES OR OTHER ALTERNATE MEANS AND BE STATIONED ON EACH SIDE OF THE SLIDE TO GRASP THE "NO FAIL" HANDLES, PULL TIGHT AND HOLD THE SLIDE AT WAIST HEIGHT. THE SLIDE CAN THEN BE USED AS AN APRON CHUTE. ADDITIONAL PEOPLE SHOULD BE USED (WHEN AVAILABLE) TO ASSIST IN STABILIZING THE CHUTE.

WARNING

DEPLOYMENT OF THE SLIDE DURING HEAVY GUSTY WIND CONDITIONS CAN CAUSE THE SLIDE TO POSITION ITSELF AT AN UNSAFE ANGLE RELATIVE TO THE FUSELAGE. IF THIS SITUATION OCCURS, A CREW MEMBER WHO HAS DESCENDED TO THE GROUND USING EITHER AN ESCAPE ROPE OR A DESCENT REEL SHALL PROCEED TO THE SLIDE DEPLOYMENT AREA AND STRAIGHTEN THE SLIDE SO THAT OTHER PERSONNEL CAN USE IT.

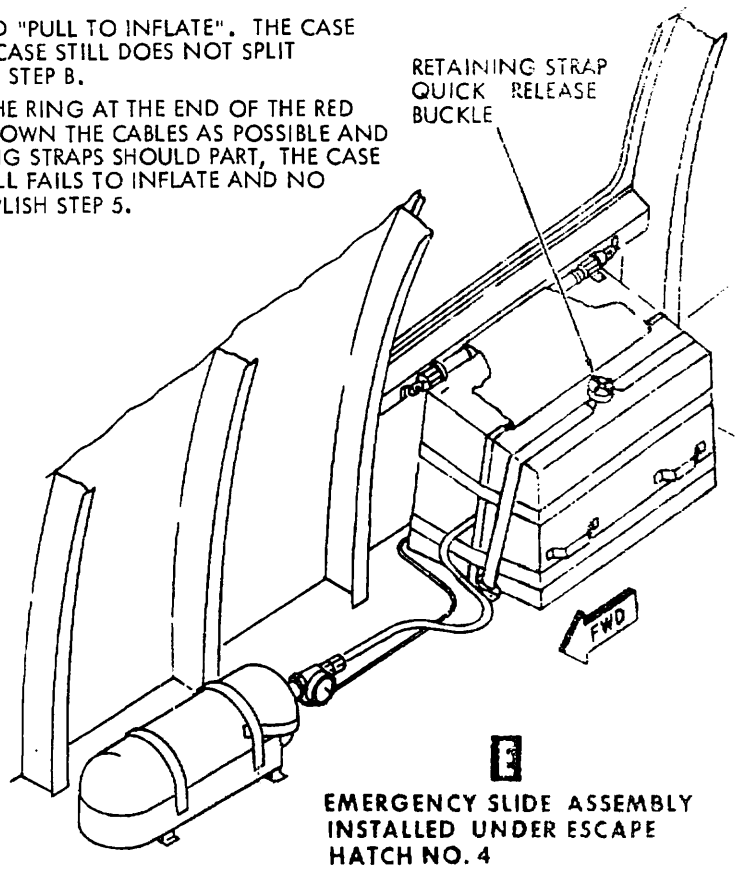

E

EMERGENCY SLIDE ASSEMBLY INSTALLED UNDER ESCAPE HATCH NO. 4

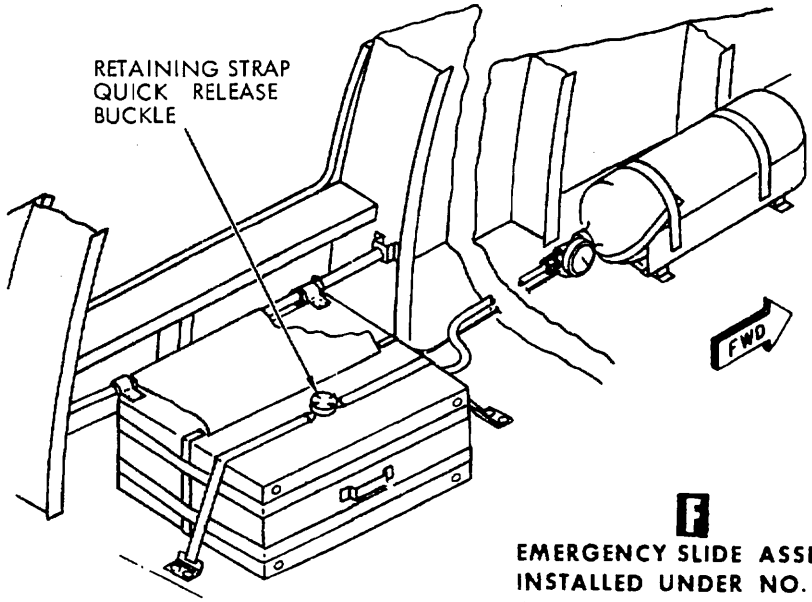

F

EMERGENCY SLIDE ASSEMBLY INSTALLED UNDER NO. 6 SERVICE DOOR

5A-1-xL/0-167-3

Figure 3-6. (Sheet 3 of 5)

1. OUTBOARD LOGISTICS RESTRAINT RAILS.
2. TIEDOWN RING.
3. PALLET.
4. EMERGENCY ESCAPE SLIDE CASE.
5. ADAPTER (PART OF SLIDE).
6. RETAINING STRAP.
7. RETAINING STRAP QUICK RELEASE BUCKLE.

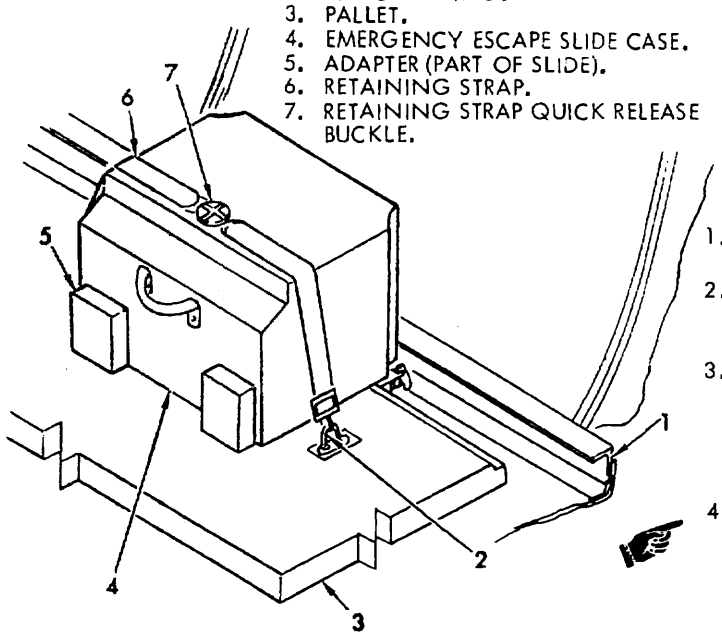

G

EMERGENCY ESCAPE SLIDE INSTALLED ON PALLETIZED SEAT KIT PALLET

1. CARGO FLOOR.
2. TIEDOWN RING.
3. RETAINING STRAP QUICK RELEASE BUCKLE.
4. OUTBOARD LOGISTICS RESTRAINT RAILS.

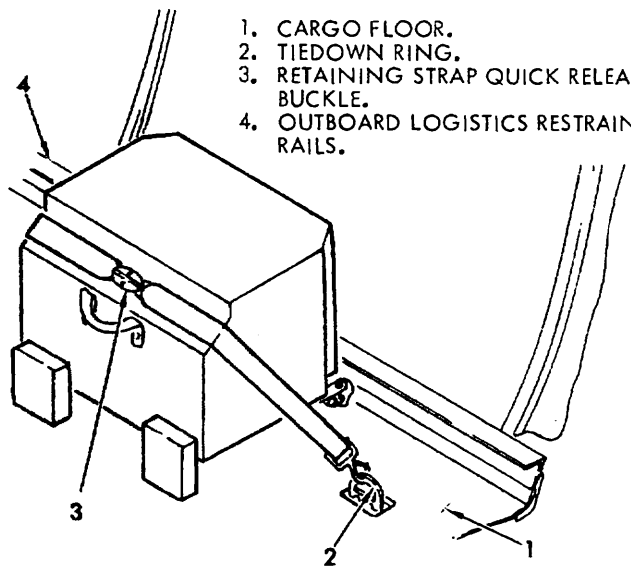

H

EMERGENCY ESCAPE SLIDE INSTALLED ON CARGO FLOOR

ESCAPE SLIDE DEPLOYMENT

PROCEDURE FOR DETAILS E F G AND H

NOTE

CARGO COMPARTMENT ESCAPE SLIDES ARE INSTALLED ADJACENT TO THE TROOP DOORS WHEN THE TROOP SEAT KITS ARE INSTALLED.

1. ROTATE THE QUICK-RELEASE BUCKLE TO RELEASE THE STOWAGE CASE RETAINING STRAP.
2. GRASP THE ASSIST HANDLE ON THE STOWAGE CASE AND ROTATE THE CASE 90 DEGREES TO POSITION IT OVER THE DOOR SILL.
3. PUSH THE STOWAGE CASE OUT OF THE EXIT DOOR. AS THE CASE LEAVES THE GIRT BAR, IT WILL SPLIT AND THE ESCAPE SLIDE WILL START UNFOLDING AND FALL TO THE GROUND. AS THE CASE FALLS, AUTOMATIC INFLATION WILL START.
4. IF THE CASE DOES NOT SPLIT, OR THE SLIDE DOES NOT INFLATE, ACCOMPLISH THE FOLLOWING:
   A. PULL ON THE RED WEBBING HANDLE MARKED "PULL TO INFLATE." THE CASE SHOULD SPLIT AND THE SLIDE INFLATE. IF THE CASE STILL DOES NOT SPLIT OR THE SLIDE DOES NOT INFLATE, ACCOMPLISH STEP B.
   B. GRASP BOTH CABLES THAT PASS THROUGH THE RING AT THE END OF THE RED WEBBING HANDLE, SLIDE YOUR HAND AS FAR DOWN THE CABLES AS POSSIBLE AND THEN SHARPLY PULL THE CABLES. THE RETAINING STRAPS SHOULD PART, THE CASE SPLIT AND THE SLIDE INFLATE. IF THE SLIDE STILL FAILS TO INFLATE AND NO OTHER EXIT IS AVAILABLE FOR EGRESS, ACCOMPLISH STEP 5.
5. IF THE SLIDE FAILS TO INFLATE, THE SLIDE HALF-TIE RELEASE HANDLE MUST BE PULLED TO ALLOW THE END OF THE SLIDE TO FALL TO THE GROUND. FOUR PEOPLE MUST DESCEND USING THE EMERGENCY ESCAPE ROPES OR OTHER ALTERNATE MEANS AND BE STATIONED ON EACH SIDE OF THE SLIDE TO GRASP THE "NO FAIL" HANDLES, PULL TIGHT AND HOLD THE SLIDE AT WAIST HEIGHT. THE SLIDE CAN THEN BE USED AS AN APRON CHUTE. ADDITIONAL PEOPLE SHOULD BE USED (WHEN AVAILABLE) TO ASSIST IN STABILIZING THE CHUTE.

WARNING

DEPLOYMENT OF THE SLIDES DURING HEAVY GUSTY WIND CONITIONS CAN CAUSE THE SLIDE TO POSITION ITSELF AT AN UNSAFE ANGLE RELATIVE TO THE FUSELAGE. IF THIS SITUATION OCCURS, A CREW MEMBER WHO HAS DESCENDED TO THE GROUND USING EITHER AN ESCAPE ROPE OR A DESCENT REEL SHALL PROCEED TO THE SLIDE DEPLOYMENT AREA AND STRAIGHTEN THE SLIDE SO THAT OTHER PERSONNEL CAN USE IT.

C5A-1-X4/1-167-4

Figure 3-6. (Sheet 4 of 5)

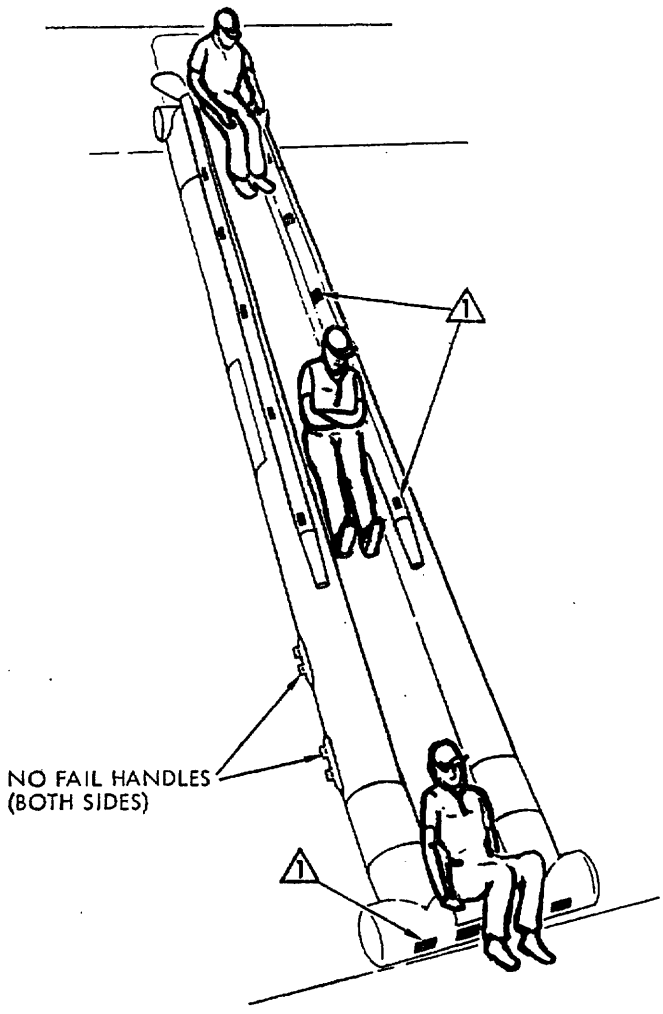

J

ESCAPE SLIDE DEPLOYED-TYPICAL FOR ALL RELIEF CREW AND TROOP COMPARTMENT SLIDES

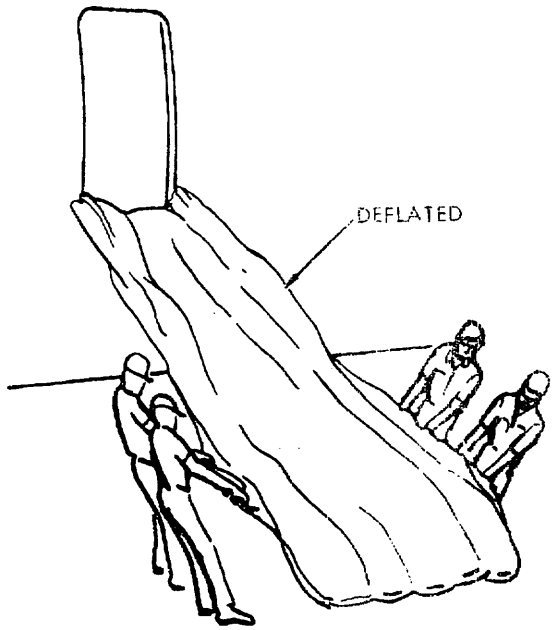

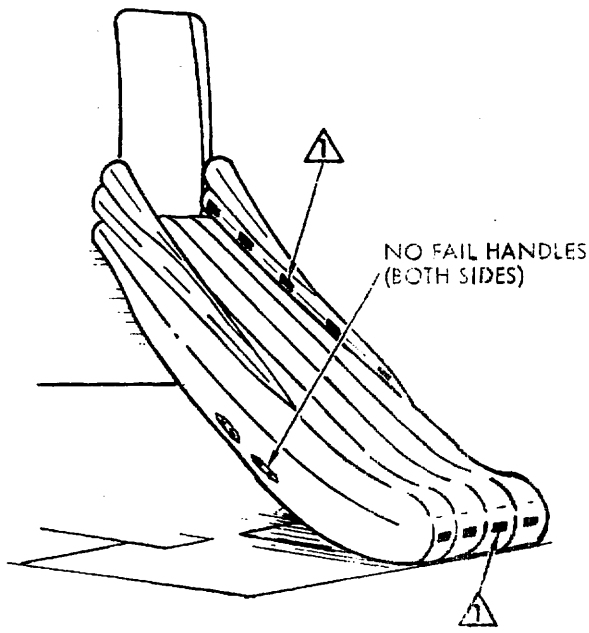

K

CARGO COMPARTMENT ESCAPE SLIDE DEPLOYED

NOTE

1. BATTERY OPERATED INTEGRAL LIGHTING SYSTEM.
2. WAIT UNTIL SLIDE IS INFLATED BEFORE USING.
3. IT IS RECOMMENDED THAT TWO PEOPLE POSITION THEMSELVES AT THE BOTTOM OF THE SLIDE AND ASSIST PERSONNEL EXITING THE SLIDE (INFLATED SLIDE).

C5A-1-XE/O-167-5

Figure 3-6. (Sheet 5 of 5)

EMERGENCY ESCAPE DESCENT REELS

1. PILOT ESCAPE REEL (CLEAR VISION WINDOW)
2. RELIEF CREW AREA ESCAPE REELS (7). (NO. 1 ESCAPE HATCH)
3. COURIER COMPARTMENT ESCAPE REELS (15). (NO. 2 ESCAPE HATCH)
4. COPILOT'S ESCAPE REEL.

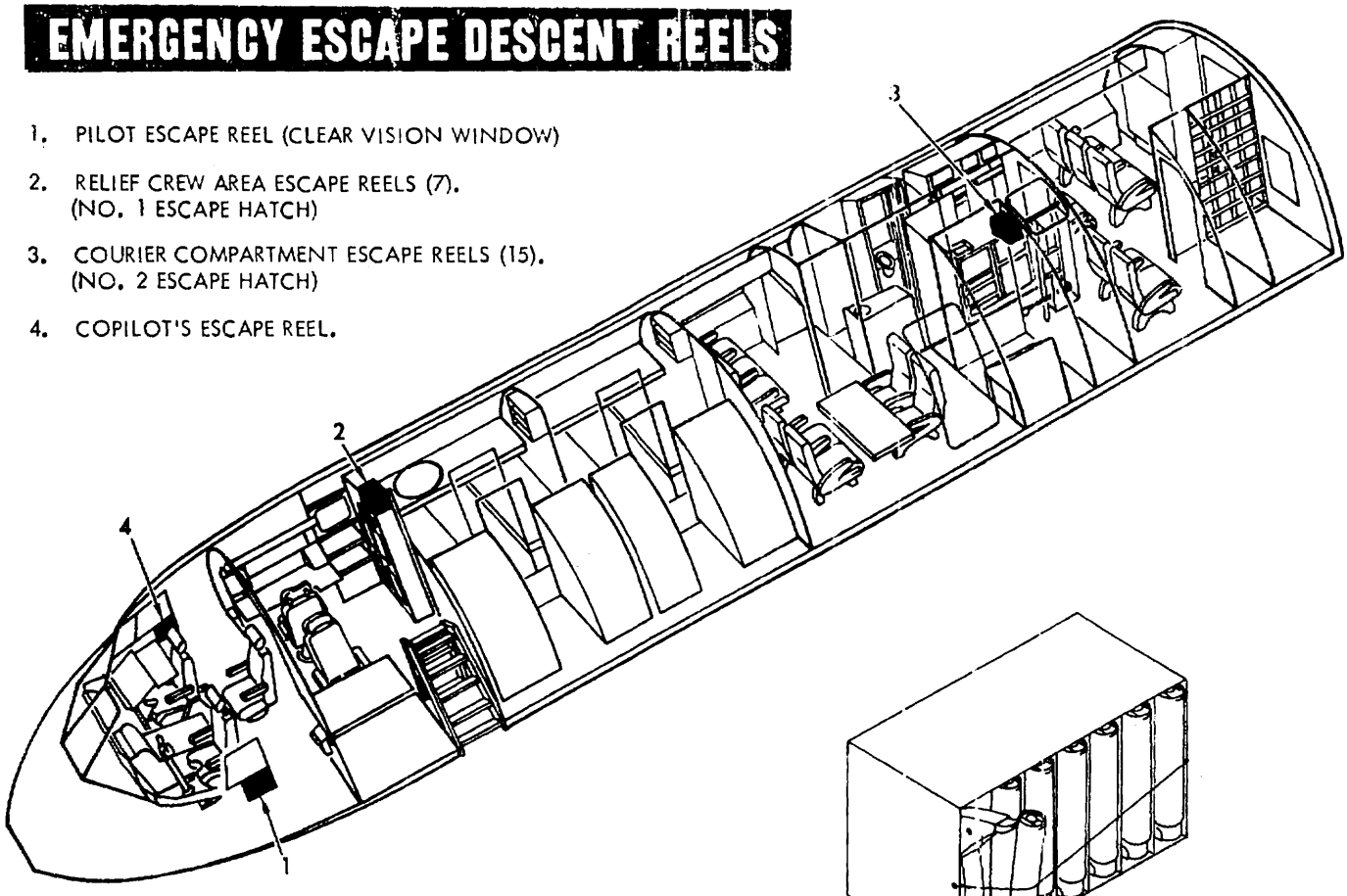

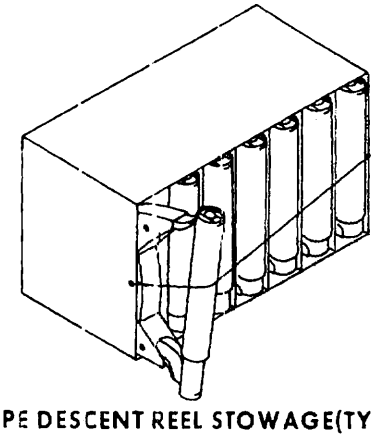

ESCAPE DESCENT REEL STOWAGE(TYPICAL)

EMERGENCY EGRESS PROCEDURE USING DESCENT REELS

Normal egress from the flight deck is made through the No. 5 service door using the escape slide. In the event that egress through this door is not possible, egress will be made using descent reels through the No. 1 and 2 overhead escape hatches. The descent reel at each of flight station clear vision windows may also be used by two crew members for egress from this area.

If either or both of the overhead escape hatches are jammed and the escape slide at the No. 5 service door is unusable, egress through this opening can be made using the descent reels stowed at either the No. 1 or No. 2 hatches.

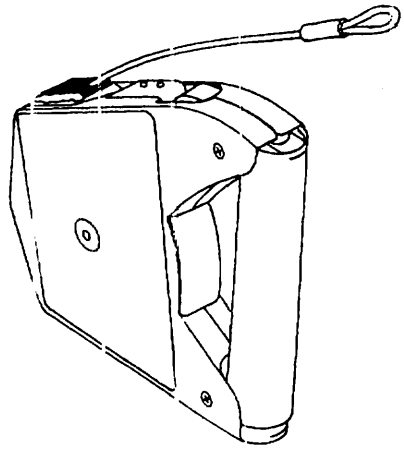

WARNING

USE OF THE DESCENT REELS THROUGH THE NO. 5 SERVICE DOOR IS NOT A NORMAL METHOD OF EGRESS, AND SHOULD NOT BE USED IF ANY OTHER METHOD IS AVAILABLE. IF THIS METHOD OF EGRESS IS MADE, CARE MUST BE TAKEN WHEN MOVING FROM THE FLIGHT STATION TO THE NO. 5 SERVICE DOOR. INJURY COULD RESULT FROM FORCEFUL CONTACT WITH THE EDGE OF A TAUT TAPE FROM REELS USED BY OTHER CREW MEMBERS.

C5A-1-X3/0-175-1

Figure 3-7. (Sheet 1 of 2)

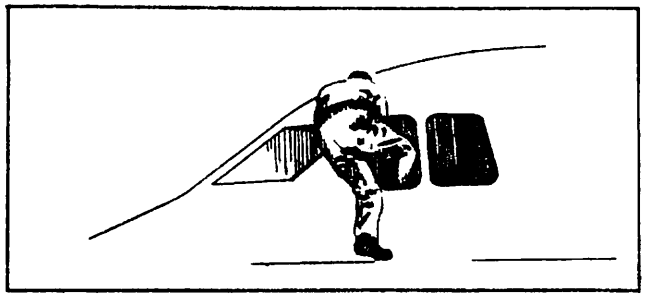

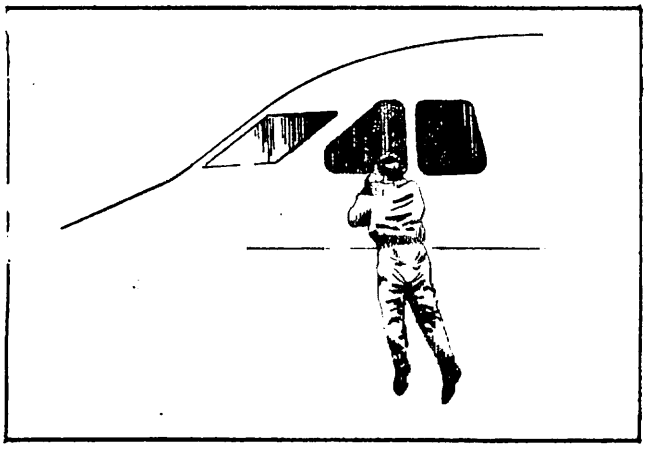

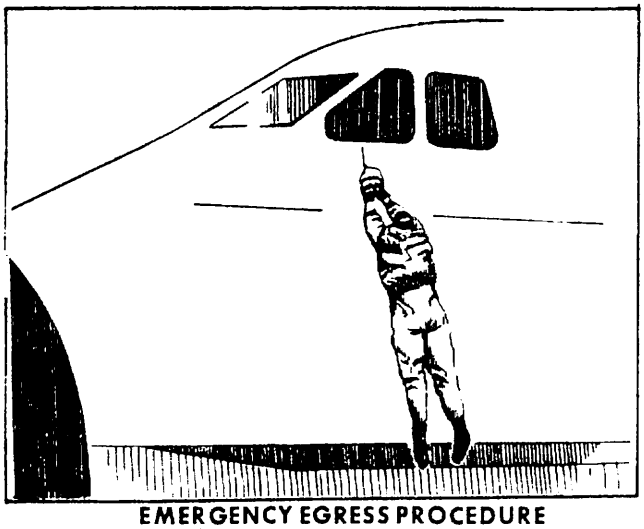

EMERGENCY EGRESS PROCEDURE USING DESCENT REELS

Emergency egress from the airplane using the descent reels at the No. 1 and 2 escape hatches is accomplished as follows:

1. Sharply pull a descent reel from the stowage container. This action breaks the safety wire and extends the spring-loaded handle.

NOTE

If the handle does not pull out of the reel and extend, pulling on the handle with one hand while holding the reel with the other hand will extend the handle.

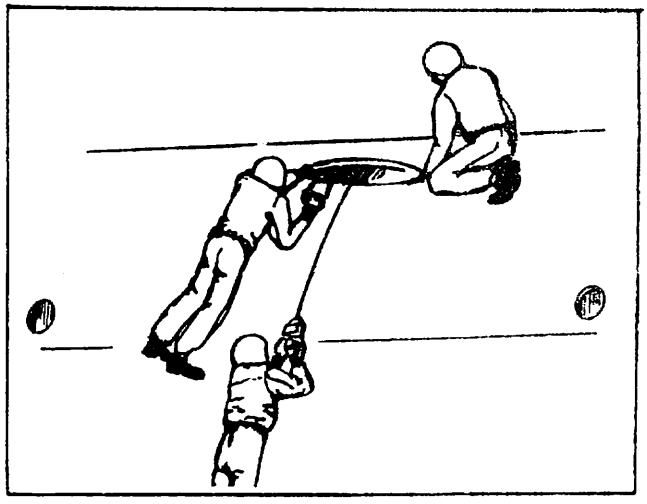

2. Climb the ladder and egress through the hatch.
3. Kneel on the fuselage and grasp the descent reel handle with both hands.
4. Descent can be made from either side of the fuselage, whether it is level or tilted. If fire exists, descend from the side away from the fire.
5. Flatten out on the fuselage and slide down facing the fuselage.
6. After reaching the ground, immediately move away from the airplane to prevent being hit by other descending crew members.

Emergency egress from the airplane using the descent reel at either clear vision window is accomplished as follows:

1. Open the window.
2. Sharply pull the escape reel from the stowage container under the window.
3. Egress through the window, turning to face the fuselage.
4. Hold on to the window ledge with one hand while holding the reel with the other hand.
5. Grasp the reel with both hands and slide down the fuselage.

Emergency egress from the airplane using descent reels at the No. 5 service door is accomplished as follows:

1. Pull a descent reel from the stowage containers, as described previously.
2. Proceed to the area of the service door, holding the descent reel by its handle. Resistence will be felt as the braking action of the descent reel is overcome.
3. Kneel or sit on the service door threshold and slide off, rotating the body to face the fuselage for the descent.

05A-1-XI/0-173-2

Figure 3-7. (Sheet 2 of 2)

ENGINE FIRE ON THE GROUND.

If an engine fire is reported or fire indication is observed while the airplane is on the ground with engines running, proceed as follows:

PILOTS	FLIGHT ENGINEER	LOADMASTER/SCANNER
1. FIRE HANDLE — PULLED (P)	1. ALL FUEL BOOST PUMPS — OFF	
2. AGENT — DISCHARGED (P)	2. PTUS — OFF	
	3. AFFECTED ATM — OFF	
An additional bottle of agent is available. If fire persists, move Bottle Select switch to ALTERNATE position, and discharge agent.	4. Affected Hydraulic Pumps - DEPRESS	
	5. Affected Hydraulic Boost Pump - OFF	
	6. Bleed Valve - CLOSED	
WARNING After an engine fire has been extinguished by using one bottle only, do not move the Bottle Select switch for that wing to its ALTERNATE position. Leaving the Bottle Select switch in the NORMAL position will assure that if a fire occurs in the other engine on that side, the bottle will be available.		
3. Brake Switch - "EMER" (CP)		
4. Parking Brake - "SET" (P)		
		When directed by pilot:
5. Ground Exits - "OPEN" (P) "OPEN" (LM, S) As appropriate.		1. Ground Exits - "OPEN" (LM,S)
If the fire persists:		
6. Engine Fire Handles - "PULLED" (P)		

PILOTS	FLIGHT ENGINEER	LOADMASTER/SCANNER
CAUTION If APU or external electric power is not available, keep one outboard engine operating (preferably No. 4) until the evacuation order is given and the warning horn is sounded. This will assure that electrical power is available for the interphones and warning horns.		
7. Troops/Crew - "EVACUATE" (P) "EVACUATING" (LM,S) After giving the evacuation order, sound the warning horn and direct the flight engineer to shut down remaining electrical power. APU Cont Switches - "STOP" (P,E) CAUTION APU or external electric power must be retained until the evacuation order is given and the warning horn is sounded. This will assure that electrical power is available for the interphones and warning horns.	When directed by pilot: 7. APU Cont Switches - "STOP" (E) 8. APU/EXT PWR Select Switch - OFF 9. Battery Switch - OFF	2. Troops/Crew - "EVACUATING" (LM,S) On the pilot's command, the loadmaster(s) shall deploy the escape slides and evacuate the troops. The scanner shall deploy the escape slide and evacuate the relief crew area and the courier area.

AIRPLANE FIRE ON THE GROUND (FSS INSTALLED).

On airplanes modified by T.O. 1387, if a fire is indicated on a fire suppression panel and/or the warning horns sound, or visually detected while the airplane is on the ground, the flight engineer or scanner/loadmaster or any other crew member will accomplish the following:

Note

If practical, air conditioning, recirculating fans, and floor heat/fans should be turned off.

Flight Engineer's Fire Suppression Panels.

If a fire is indicated on the nitrogen or FE1301 fire suppression panel at the flight engineer's station, or if fire is visually detected, proceed as follows:

Note

Electrical power must be on to energize the panels at the flight engineer's station.

a. Arm/Panel Safe Switch - ARM

b. Zone Alarm Pushbutton - DEPRESSED

Depress the illuminated zone alarm pushbutton. If the fire was detected visually, depress the appropriate zone pushbutton.

Note

If a fire persists in a zone protected by nitrogen fire suppression, a repeated discharge of nitrogen into the affected compartment may be accomplished only after the flow light goes off.

c. Evacuate the airplane.

Cargo Compartment Fire Suppression Panel.

If the loadmaster or scanner is in the cargo compartment and observes a fire indication on the cargo compartment fire suppression panel, or observes a fire in the avionics, center wing or cargo compartment, he will proceed as follows:

Note

Electrical power must be on to energize the cargo compartment fire suppression panel.

a. Arm/Panel Safe Switch - ARM

b. Zone Alarm Pushbutton - DEPRESSED

Depress the illuminated zone alarm pushbutton. If fire was detected visually, depress the appropriate zone pushbutton.

c. Evacuate the airplane.

Nose Wheel Well Fire Suppression Panel.

If any crew member is outside the airplane and observes a fire, he will proceed as follows:

Note

If electrical power is not on, the nose wheel well panel operates on normal battery power. Discharge of fire suppression agent is accomplished in the same manner in either power configuration.

a. Panel Cover - OPENED

Depress the two-way relief valve and then open the cover.

b. Power/Arm/Panel Safe Switch - POWER/ARM

c. Zone Alarm Pushbutton - DEPRESSED

Depress the illuminated zone alarm pushbutton. If fire was detected visually, depress the appropriate zone pushbutton.

d. Evacuate the area.

PTU COMPARTMENT FIRE (CREW IN PLACE) (FSS INSTALLED).

On airplanes modified by T.O. 1387, if a fire in either PTU compartment is indicated, proceed as follows:

PILOTS	FLIGHT ENGINEER	LOADMASTER/SCANNER
1. Brake Switch - "EMER" (CP)	1. FSS — ARMED	
2. Parking Brake - "SET" (P)	2. ZONE ALARM PUSHBUTTON — DEPRESSED Depress the illuminated zone alarm pushbutton. If fire is detected visually, depress the appropriate zone pushbutton. **Note** If fire persists, repeated discharges of nitrogen into the compartment may be accomplished only after the flow light goes off.	
	3. Affected PTU - OFF	
3. Ground Exists - "OPEN" (P) "OPEN" (LM,S) As appropriate.		When directed by pilot: 1. Ground Exists - "OPEN" (LM,S)
If fire persists:		
4. Engine Fuel and Start Ignition Switches - "STOP" (P) **CAUTION** If APU or external electrical power is not available, keep one outboard engine operating (preferable No. 4) until the evacuation order is given and the warning horn is sounded. This will assure that electrical power is available for the interphones and warning horns.		
5. Troops/Crew - "EVACUATE" (P) "EVACUATING" (LM, S) After giving the evacuation order, sound the warning horn and direct the flight engineer to shut down remaining electrical power.		2. Troops/Crew - "EVACUATING" (LM, S) On the pilot's command, the loadmaster(s) shall deploy the escape slides and evacuate the troops. The scanner shall deploy the escape slide and evacuate the relief crew area and the courier area.

PILOTS	FLIGHT ENGINEER	LOADMASTER/SCANNER
	When directed by the pilot:	
6. Operating APU Cont Switch - "STOP" (P, E)	4. Operating APU Cont Switches "STOP" (E)	
	5. APU/EXT PWR Selector Switch - OFF	
	6. Battery Switch - OFF	

AUXILIARY POWER UNIT FIRE (CREW IN PLACE).

If a fire in either APU compartment is indicated, proceed as follows:

1. Brake Switch - "EMER" (CP)	1. APU FIRE HANDLE — PULLED
2. Parking Brake - "SET" (P)	2. AGENT — DISCHARGED

PILOTS	FLIGHT ENGINEER	LOADMASTER/SCANNER
	Note If fire persists, select and discharge alternate fire extinguishing agent bottle. If the flight deck is occupied, assure that the on speed light goes off for positive indication of APU shutdown prior to discharging the alternate bottle. If the on speed light does not go off, place the affected APU Cont switch to STOP and discharge the alternate bottle.	
	3. APU Cont Switch - STOP	
	4. Affected Hydraulic Boost Pump - OFF	
	5. APU Generator Selector Switch - AS REQUIRED Select operating APU or start the other APU if required to supply airplane electrical power.	
		When directed by pilot: 1. Ground Exits - "OPEN" (LM,S)
3. Ground Exits - "OPEN" (P) "OPEN" (LM,S)		
As appropriate. If fire persists:		
4. Engine Fuel and Start Ignition Switches - "STOP" (P)		
CAUTION If APU or external electrical power is not available, keep one outboard engine operating (preferably No. 4) until the evacuation order is given and the warning horn is sounded. This will assure that electrical power is available for the interphones and warning horns.		

PILOTS	FLIGHT ENGINEER	LOADMASTER/SCANNER
5. Troops/Crew - "EVACUATE" (P) "EVACUATING" (LM,S) After giving the evacuation order, sound the warning horn and direct the flight engineer to shut down remaining electrical power.		2. Troops/Crew - "EVACUATING" (LM,S) On the pilot's command, the loadmaster(s) shall deploy the escape slides and evacuate the troops. The scanner shall deploy the escape slide and evacuate the relief crew area and the courier area.
6. Operating APU Cont Switch - "STOP" (P,E)	When directed by the pilot: 6. Operating APU Cont Switch - "STOP" (E) 7. APU/EXT PWR Selector Switch - OFF 8. Battery Switch - OFF **CAUTION** After pulling the fire handle, wait 5 seconds before placing the Battery switch to OFF to ensure that the APU fuel shutoff valves have closed.	

AUXILIARY POWER UNIT FIRE (CREW NOT IN PLACE).

This checklist is designed for use by flight engineers/loadmasters during preflight, kneeling/unkneeling, and/or on/off loading when the crew is not present.

Note

When monitoring APU from forward loadmaster's control panel, Steps 1 and 2 will be accomplished from this panel.

FLIGHT ENGINEER/LOADMASTER

1. APU FIRE HANDLE — PULLED
2. AGENT — DISCHARGED

Note

If fire persists, select and discharge alternate fire extinguish agent bottle. If the flight deck is occupied, assure that the onspeed light goes off for positive indication of APU shutdown prior to discharging the alternate bottle. If the on speed light does not go off, place the affected APU Cont switch to STOP and discharge the alternate bottle.

FLIGHT ENGINEER/LOADMASTER

3. APU Generator Selector Switch - AS REQUIRED

Ensure operating APU is selected if external power is not available.

4. Radio Call - COMPLETED

Notify ground control of the emergency and request assistance.

5. APU Cont Switch (Affected APU) - STOP

6. Affected Hydraulic Boost Pump - OFF

7. Personnel - EVACUATE

Notify all personnel via interphone to evacuate the airplane and sound the warning horn prior to shutting down the operating APU.

8. Operating APU Cont Switch - STOP

9. APU/EXT PWR Selector Switch - OFF

10. Battery Switch - OFF

LOSS OF FLUIDS — VISIBLE OR INDICATED.

If visible fluids from an engine or indications of loss of fluid are observed while the airplane is on the ground, with the engines running, proceed as follows:

PILOTS	FLIGHT ENGINEER	LOADMASTER/SCANNER
1. FIRE EQUIPMENT — REQUESTED (CP)	1. All Fuel Boost Pumps - OFF	
2. All Engines - "IDLE" (P)	2. PTUs - OFF	
3. Brake Switch - "EMER" (CP)	3. Affected ATM - OFF	
	4. Affected Hydraulic Pumps - DEPRESS	
	5. Affected Hydraulic Boost Pump - OFF	

PILOTS	FLIGHT ENGINEER	LOADMASTER, SCANNER
4. Parking Brake - "SET" (P)	5A. FSS - ARMED (FSS INSTALLED) On airplanes modified by T.O. 1387, place the arming switch on the FE1301 Fire Suppression control and indicator panel to ARM.	When directed by pilot: 1. Ground Exits - "OPEN" (LM,S)
5. Ground Exits - "OPEN" (P) "OPEN" (LM,S)	5B. Zone Alarm Pushbutton - DEPRESSED (FSS INSTALLED) On airplanes modified by T.O. 1387, depress the zone alarm pushbutton for the appropriate wing zone to aid in preventing a fire.	
6. Unaffected Engines - "SHUTDOWN" (P) **CAUTION** Have emergency fire equipment standing by prior to any engine shutdown. **CAUTION** If APU or external electric power is not available, keep one outboard engine operating (preferably No. 4) until the evacuation order is given and the warning horn is sounded. This will assure that electrical power is available for the interphones and warning horns. If loss of fluid can be isolated to a wing or an engine, shut down unaffected engines, using normal shutdown procedures.	6. Bleed Air Manifold - DEPRESSURIZED Depressurize bleed air manifold on affected wing.	
7. Affected Engine Fire Handle - "PULLED" (P) If a fire occurs, the pilot shall direct the following actions:		
8. Agent - "DISCHARGED" (P)		

PILOTS	FLIGHT ENGINEER	LOADMASTER/SCANNER
9. Troops/Crew - "EVACUATE" (P) "EVACUATING" (LM,S)		2. Troops/Crew - "EVACUATING" (LM,S) On the pilot's command, the loadmaster(s) shall deploy the escape slides and evacuate the troops. The scanner shall deploy the escape slide and evacuate the relief crew area and the courier area.
	When directed by pilot:	
10. APU Cont Switches - "STOP" (P,E)	7. APU Cont Switches - "STOP" (E)	
	8. APU/EXT PWR Select Switch - OFF	
CAUTION APU or external electric power must be retained until the evacuation order is given and the warning horn is sounded. This will assure that electrical power is available for the interphones and warning horns.	9. Battery Switch - OFF	

TAKE-OFF EMERGENCIES.

The possibility of engine failure or system emergencies should be considered for each take-off. The crew should be thoroughly familiar with their duties and with the pilot's intended actions in the event of an emergency during take-off.

FACTORS AFFECTING TAKE-OFF DECISION.

The decision whether to abort the take-off should be based on the following considerations:

a. If at the end of acceleration check time, the speed is less than the minimum acceptable, the take-off should be aborted.

b. If an engine failure or system emergency is experienced prior to GO speed, the take-off shall be aborted.

c. If an engine failure or system emergency is experienced after GO speed, the take-off should be continued.

ABORT PROCEDURES.

If it becomes necessary to discontinue the take-off, the pilot should concentrate his efforts on maintaining directional control while stopping the airplane in the remaining runway using the following procedures:

a. The pilot shall simultaneously retard all Throttles to REV IDLE, state, "SPOILERS" and apply brakes as required.

Note

The abort distance requires deployment of the ground spoilers and the application of maximum anti-skid brakes as soon as possible.

b. The copilot shall deploy the ground spoilers when directed by the pilot.

c. Apply reverse thrust to symmetrical engines as required.

d. After roll out, determine reason for abort, take necessary corrective action in case of engine fire/failure, etc., and accomplish the After Landing checklist. Pilot judgment will determine which checklists will be accomplished in which sequence.

CAUTION

Refer to Brake Limits Chart, Part 9 of T.O. 1C-5A-1-1, before attempting another take-off.

ENGINE FAILURE DURING TAKE-OFF, TAKE-OFF CONTINUED.

Flight Characteristics After Loss of an Engine.

When loss of an engine occurs near minimum control speed, maintain airspeed with elevators, directional control with rudders and lateral control with spoilers/ailerons. Remember, the more lateral control used, the more drag is induced, and the less the climb performance will be. Minimum control speed is based on a bank angle of five degrees away from the failed engine.

Note

The ailerons may be centered from the uprigged position after an engine failure by using the Aileron Centering Procedure in Section I.

Landing Gear.

If an engine failure occurs during or immediately after take-off at heavy gross weights, climb performance may be marginal. The landing gear should be retracted as soon as practical under these conditions because climb gradient is reduced 1.3 percent with gear down. For example, if the predicted climb gradient is 2.3 percent it will be reduced to 1.0 percent. Do not retract the landing gear before a definite rate of climb is indicated by the vertical velocity indicator and the altimeter.

Flaps.

If an engine failure occurs during or immediately after take-off, the flaps shall be left at TAKE-OFF while climbing at minimum climbout speed or as commanded by the go-around pitch command bar until reaching at least 1,000 feet above the runway altitude or higher if terrain features dictate. Bank angles up to 30 degrees may be utilized for obstacle clearance: however, it must be noted that rate of climb is reduced by approximately 200 feet/minute. Accelerate to flap retraction speed, retract the flaps, and accelerate to at least 15 knots above flap retract speed prior to exceeding 10 degrees of bank. Continue to desired maneuvering airspeed or three-engine enroute climb speed, as required.

ENGINE FAILURE/FIRE, TAKE-OFF CONTINUED.

If an engine failure/fire occurs after passing GO speed, the take-off should be continued. The pilot should evaluate the engine failure/fire indications, thrust available from the affected engine and take-off conditions prior to initiating this checklist. After an engine failure, the pilot shall advance the Throttles to the planned Take-Off Inflight EPR as a minimum, but they may be advanced further not to exceed TIT limit. If it is necessary to exceed the 5 minute TRT limit, an entry in Form 781 is required.

Note

The ailerons may be centered from the uprigged position after an engine failure by using the Aileron Centering Procedure in Section I.

PILOTS	FLIGHT ENGINEER	SCANNER
1. FIRE HANDLE — PULLED (P)	1. Fuel Boost Pump - OFF	

PILOTS

2. AGENT — DISCHARGED (P)

If fire is indicated discharge the agent: an additional bottle is available. If fire persists, move Bottle Select switch to ALTERNATE position, and discharge agent.

WARNING

After an engine fire has been extinguished by using one bottle only, do not move the Bottle Select switch for that wing to its ALTERNATE position. Leaving the Bottle Select switch in the NORMAL position will assure that if a fire occurs in the other engine on that side, the bottle will be available.

3. Throttle - "IDLE" (P)

4. Fuel and Start Ignition - "STOP" (P)

5. Engine Scan - "AS REQUIRED" (P, S)

6. Engineer's Report - "CHECK COMPLETED, FUEL REMAINING _____ LBS" (E)

7. Rudder Lim Switch - "MIN Q" (CP)

CAUTION

Use caution when applying rudder inputs with the rudder stops removed. Structural damage can result from excessive rudder deflections at high airspeed.

8. Engine Failure/Fire, Take-off Continued Check - "COMPLETED" (CP)

If a safe altitude cannot be attained or maintained with the available thrust, jettison fuel and land as soon as practical. Refer to Fuel Jettison checklist.

FLIGHT ENGINEER

2. PTUs - AS REQUIRED

If fire is indicated and there is no indication of hydraulic fluid loss, wait until the gear is retracted, then turn OFF the PTUs between the engine on fire and the adjacent engine(s). Leave the PTUs ON if there is no indication of fire or hydraulic fluid loss.

3. APU Iso Valve - AS REQUIRED

Open the applicable APU isolation valve, if the ATM is to be operated.

4. ATM - AS REQUIRED

If an outboard engine has failed or fire is indicated and there is no indication of hydraulic fluid loss, the applicable ATM shall be turned on. After gear retraction, turn off the ATM and close the APU isolation valve.

5. Affected Hydraulic Boost Pump - AS REQUIRED

If the ATM is not on, turn off the affected hydraulic boost pump.

6. Hydraulic Pumps - DEPRESS

7. Bleed Valve - CLOSED

8. Generator - OFF

9. Engine Anti-ice - OFF

10. Engineer's Report - "CHECK COMPLETED, FUEL REMAINING _____ LBS" (E)

SCANNER

1. Engine Scan - "AS REQUIRED" (S)

INFLIGHT EMERGENCIES.

ENGINE FAILURE DURING CLIMBOUT - WITH OBSTACLE.

If an engine failure occurs at or above V_{mco} during climbout prior to reaching obstacle clearance height, continue climbing at the indicated airspeed existing when the engine failure occured until clear of obstacle.

ENGINE FAILURE DURING ENROUTE CLIMB.

If engine failure occurs during enroute climb, adjust airspeed to climb at the three engine climb speed shown in Part 4, T.O. 1C-5A-1-1.

ENGINE FAILURE DURING CRUISE.

Failure of an engine during cruise will not appreciably affect directional control, but will result in a slower cruise speed and decrease the optimum altitude. The type cruise procedure being flown will dictate whether a climb to optimum cruise altitude or descent is required. Overall range will be reduced appreciably with the loss of an engine. Applicable charts covering three- and two-engine cruise procedures are contained in Part 5 of T.O. 1C-5A-1-1.

Note

The ailerons may be centered from the up-rigged position after an engine failure by using the Aileron Centering Procedure in Section I.

DRIFTDOWN.

If loss of thrust is experienced on one or more engines while flying above the 3- or 2-engine cruise ceiling, advance the Throttles on the remaining engines to NRT and establish the driftdown speed schedule until cruise ceiling can be maintained.

2- or 3-engine driftdown - 0.60 MACH or 250 KCAS whichever is less

VISIBLE OR INDICATED LOSS OF FLUIDS (ENGINE/PYLON).

Visible or indicated loss of fluids (engine/pylon) inflight: The engine should be shut down utilizing the Emergency Engine Shutdown checklist if visible fluids loss cannot be isolated. However, if visible fluids or an indication of loss of fluid is observed in the engine or pylon area, while in the landing pattern, it is advisable not to shutdown the engine because sufficient cooling time may not be available to prevent ignition of fluids. The flight engineer shall perform steps 1 through 4 of the Emergency Engine Shutdown checklist if the engine is not shut down. Fire equipment should be requested prior to landing. Do not use thrust reversers unless required for stopping on landing. After landing, follow the Loss of Fluids - Visible or Indicated checklist in this section.

SUSPECTED ENGINE VIBRATION.

On 68306, 70169, 00447 and up and airplanes modified by T.O. 1450, if it is suspected that an engine is causing vibration, accomplish a quick check. If the MADAR engine vibration limits are exceeded, accomplish a precautionary engine shutdown.

EMERGENCY ENGINE SHUTDOWN.

The following is a list of engine failures that would necessitate an emergency engine shutdown: Engine fire, engine disintegration, extreme engine vibration, foreign object damage, visible fluids from engine and excessive fuel flow. Extreme engine vibration is defined as vibration of a magnitude which in the judgment of the pilot will result in a catastrophic failure.

Note

The ailerons may be centered from the uprigged position after an engine shutdown by using the Aileron Centering Procedure in Section I.

PILOTS

1. FIRE HANDLE — PULLED (P)

FLIGHT ENGINEER

1. Fuel Boost Pump - OFF
2. PTUs - AS REQUIRED

   Turn the PTU switch(es) ON to the failed engine system if there is no indication of fire or hydraulic fluid loss.

SCANNER

PILOTS	FLIGHT ENGINEER	SCANNER

CAUTION

On 90015 and up and airplanes modified by T.O. 927 but not modified by T.O. 1232, do not operate the thrust reversers by the normal or emergency method with the fire handle pulled. Rupture of the return line between the thrust reverser actuator control valve and the emergency shutoff valve may result. Therefore, serious consideration should be given to retracting the thrust reversers prior to pulling the fire handle. On 00453 and up and airplanes modified by T.O. 1232, the thrust reversers will not operate with the fire handle pulled.

2. AGENT — DISCHARGED (P)

If a fire is indicated, discharge the agent. An additional bottle is available. If fire persists, move Bottle Select switch to ALTERNATE position, and discharge agent.

WARNING

After an engine fire has been extinguished by using one bottle only, do not move the Bottle Select switch for that wing to its ALTERNATE position. Leaving the Bottle Select switch in the NORMAL position will assure that if a fire occurs in the other engine on that side, the bottle will be available.

3. Throttle - "IDLE" (P)

4. Fuel and Start Ignition - "STOP" (P)

5. Engine Scan - "AS REQUIRED" (P, S)

6. Engineer's Report - "CHECK COMPLETED, FUEL REMAINING ____ LBS" (E)

7. Rudder Lim Switch - "MIN Q" (CP)

CAUTION

Use caution when applying rudder inputs with the rudder stops removed. Structural damage can result from excessive rudder deflections at high airspeed.

3. Hydraulic Pumps - DEPRESS

4. Affected Hydraulic Boost Pump - OFF

5. Fuel Crossfeed Valve - CLOSED

6. Fuel Isolation Valve - CLOSED

7. Bleed Valve - CLOSED

8. Generator - OFF

9. Engine Anti-ice - OFF

10. Engineer's Report - "CHECK COMPLETED, FUEL REMAINING _____ LBS" (E)

1. Engine Scan "AS REQUIRED" (S)

PILOTS FLIGHT ENGINEER SCANNER

WARNING

Excessive rudder trim with the rudder against the stops can result in extreme rudder deflection and possible structural damage when the stops are removed.

8. Emergency Engine Shutdown Check - "COMPLETED" (CP)

If a safe altitude cannot be maintained with the available thrust, jettison fuel and land as soon as practical. Refer to Fuel Jettison checklist.

Note

Three-engine range will be reduced by approximately 15 percent if the thrust reverser is left deployed on the inoperative engine.

Note

If it is absolutely necessary to retract the thrust reverser on the inoperative engine and it has been ascertained that no fire or fire hazard exists at this time, this can be done by returning the fire handle to the NORMAL position and retracting the thrust reverser with the Emergency Retract switch or normal retraction by turning ON the associated PTU and returning the Throttle to IDLE. Once the thrust reverser is retracted, the fire handle should be pulled out again.

PRECAUTIONARY ENGINE SHUTDOWN.

The following is a list of engine failures that would necessitate a precautionary engine shutdown. abnormally high, low, or no oil pressure, low oil quantity, excessive oil temperature, excessive engine vibrations, TIT over-temperature, engine overheat, N_1 or N_2 overspeed, failure of CSD to disconnect (CSD) fail light or generator fail light on with indicated frequency and voltage fluctuation), failure of a thrust reverser to retract, when not able to close the bleed valves with duct overheat, and nacelle bleed air duct failure. Excessive engine vibration is defined as vibration of a magnitude, which in the judgment of the pilot, will result in damage to the engine or exceeds the MADAR engine vibration limits.

Note

The ailerons may be centered from the uprigged position after an engine shutdown by using the Aileron Centering Procedure in Section I.

Note

If an engine is shut down due to oil starvation, consideration should be given to pulling the fire handle to isolate the fuel and hydraulic system in the event of engine seizure/disintegration or separation from the pylon.

PILOTS

1. Throttle - "IDLE" (P)
2. Fuel and Start Ignition - "STOP" (P)
3. Engine Scan - "AS REQUIRED" (P, S)
4. Engineer's Report - "CHECK COMPLETED, FUEL REMAINING ___ LBS" (E)
5. Rudder Lim Switch - "MIN Q" (CP)

CAUTION

Use caution when applying rudder inputs with the rudder stops removed. Structural damage can result from excessive rudder deflections at high airspeeds.

WARNING

Excessive rudder trim with the rudder against the stops can result in extreme rudder deflection and possible structural damage when the stops are removed.

6. Precautionary Engine Shutdown Check - "COMPLETED" (CP)

If a safe altitude cannot be maintained with the available thrust, jettison fuel and land as soon as practical. Refer to Fuel Jettison checklist.

Note

Three-engine range will be reduced by approximately 15 percent if the thrust reverser is left deployed on the inoperative engine.

FLIGHT ENGINEER

1. PTUs - AS REQUIRED

   Turn the PTU switch(es) on to the failed engine system if there is no indication of hydraulic fluid loss.
2. Fuel Boost Pump - OFF
3. Hydraulic Pumps - DEPRESS
4. Affected Hydraulic Boost Pump - OFF
5. Fuel Crossfeed Valve - CLOSED
6. Fuel Isolation Valve - CLOSED
7. Bleed Valve - CLOSED
8. Generator - OFF
9. Engine Anti-ice - OFF
10. Engineer's Report - "CHECK COMPLETED, FUEL REMAINING _____ LBS" (E)

SCANNER

1. Engine Scan "AS REQUIRED" (S)

FOUR ENGINE FLAMEOUT.

PILOTS

1. RAT — DEPLOY (P)

Note

Whenever the RAT is deployed either manually or automatically the control circuit for the 1-2 PTU is de-energized. In addition, the control circuits to the 2-3 and 3-4 PTUs are inoperative due to loss of electrical power.

FLIGHT ENGINEER

1. NO. 2 AND 3 HYDRAULIC PUMPS — DEPRESS

   Place No. 2 and 3 pump switches to DEPRESS.
2. APUS — START

   Refer to Auxiliary Power Unit Inflight Starting Procedures in this section.

PILOTS

WARNING

In order for the RAT to provide hydraulic pressure to drive the emergency generator and to operate the flight controls, airspeed must be a minimum of 175 KCAS below 15,000 feet and 190 KCAS above 15,000 feet.

Below 175 KCAS the isolated bus must be turned off to maintain emergency bus electrical power and to operate the flight controls.

155 KCAS is the minimum speed to maintain flight instrument operation.

Airstart ignition is not available with the isolated bus off.

Note

When operating on either or both the emergency bus and the isolated bus, pitch trim must be operated manually.

2. NO. 3 STARTER BUTTON — IN (P)
3. NO. 2 FUEL AND START IGNITION — AIRSTART (P)
4. NO. 1 and 4 Starter Buttons - IN (P)

   Depress the starter buttons for engines 1 and 4 as soon as start is accomplished on either 2 or 3. If unassisted airstart was unsuccessful on No. 2 engine, depress its starter button.
5. Continuous Ignition - "ON" (P)
6. RAT - "RETRACT, THEN AUTO" (P)

   The pilot will retract the RAT when it is no longer needed.
7. Engineer's Report - "CHECK COMPLETED" (E)
8. Four Engine Flameout Check - "COMPLETED" (CP)

FLIGHT ENGINEER

WARNING

Attempted starts above 25,000 feet may be unsuccessful and deplete the start accumulators pressure.

3. APU ISO VALVES — OPEN
4. FLOOR HEAT SWITCH — OFF
5. AIR COND MASTER SWITCH — OFF
6. APU GENERATOR SELECTOR SWITCH — LEFT OR RIGHT
7. APU/EXT POWER SELECTOR SWITCH — APU
8. APU BLEED VALVES — OPEN
9. Hydraulic Pumps - NORM

   Return Hydraulic Pump switches to NORM for each engine as soon as start is accomplished.
10. Air Cond Master Switch - BOTH

    Repressurize the airplane when at least two engines are providing bleed air.
11. APU/EXT Power Selector Switch- OFF
12. APU Generator Switch - OFF
13. APU Isolation Valves - CLOSED
14. APU Bleed Valves - CLOSED
15. APUs - STOP

Note

APU inlet doors will not close until airspeed is reduced below 170 KCAS.

16. Floor Heat Switch - AS REQUIRED
17. Engineers Report "CHECK COMPLETED" (E)

AIR START

If an engine flameout was due to improper operating techniques or fuel starvation, an air start can usually be accomplished to restore normal engine operation.

CAUTION

Do not attempt to restart an engine that was shut down because of fire or mechanical failure unless, in the opinion of the pilot, a greater emergency exists. A recurrence of emergency could be more serious than the first occurrence. The scanner shall be in the cargo compartment on interphone to scan the engine during air start.

PILOTS

1. Throttle - "START" (P)
2. Fire Handle - "IN" (P)
3. Starter Button - "IN" (P)

   Normally, all air starts will be made with starter assist. If the starter is inoperative or if a starter assist air start is unsuccessful, the engine can probably be air started without starter assist if N_2 RPM indicates 10 percent or more below 10,000 feet with the hydraulic pumps depressurized. Above 10,000 feet maintain a minimum of 210 KCAS (to prevent a stall start) with the hydraulic pumps depressurized. Air starts can be accomplished up to 30,000 feet. However, they may be attempted at higher altitudes.

   Note

   Air starts will probably be more difficult using JP-5 fuel with smokeless engines. Therefore, generally the most favorable conditions for unassisted starts are at airspeeds greater than 210 KCAS and altitudes below 20,000 feet.

4. Fuel and Start Ignition - "AS REQUIRED" (P)

   Note

   If starter is engaged place the Fuel and Start Ignition switch to RUN at 11% N_2 RPM. If starter is not used, hold the Fuel and Start Ignition switch in AIR START until start indications are observed.

FLIGHT ENGINEER

1. Hydraulic Pumps - DEPRESS
2. Main Fuel Boost Pump - ON
3. Press Aug Valve Switch - OFF
4. Bleed Valve - OPEN/PRESSURE CHECKED
5. PTUs - ON

   Turn on the applicable hydraulic power transfer units to pressurize the failed engine hydraulic system.

6. Engine Instruments - CHECKED
7. Oil Pressure - CHECKED
8. Hydraulic Pumps - NORM

   Place the Hydraulic Pump switches to NORM after the engine is started. Wait approximately 2 seconds after one pump is pressurized before pressurizing the other pump.

9. PTUs - OFF
10. Fuel Management - AS REQUIRED
11. Engine Generator - ON
12. Press Aug Valve Switch - NORM

PILOTS	FLIGHT ENGINEER
A start should be obtained within 30 seconds and will be evidenced by an increase in N_2 RPM and TIT. If the engine does not light off or does not accelerate after lightoff, or if the TIT exceeds limits or the oil pressure does not reach minimum allowable, discontinue the start by placing the Fuel and Start Ignition switch to STOP.	
Note If the starter button does not pop out by idle N_2 RPM pull it out. If the flight engineer advises that the start valve open light has not gone out by idle N_2 RPM, the flight engineer shall place the Bleed Air and Augmentor Air Valve switches to OFF. If conditions permit, shut down the engine to prevent damage to the starter.	
5. Rudder Lim Switch - "AUTO" (CP)	
6. Engineer's Report - "CHECK COMPLETED" (E)	13. Engineer's Report - "CHECK COMPLETED" (E)
7. Airstart Check - "COMPLETED" (CP)	

AUXILIARY POWER UNIT INFLIGHT STARTING.

If the APU is required to be used in flight, proceed as follows:

FLIGHT ENGINEER

1. APU Cont Switch - START

Note

During an APU start, the APU Cont switch must be placed from STOP to START until the start light comes on. Hesitating at the RUN position until the door open light comes on may result in excessive EGT or an overheat during start.

WARNING

Attempted starts above 25,000 feet may be unsuccessful and deplete the start accumulators pressure.

WARNING

APU starts with JP-5, Jet A, and Jet A-1 fuel may result in a fire warning indication. If the fire warning light comes on, continue the starting sequence and the light should go out within 10 seconds. If the light remains on for longer than 10 seconds, pull the APU fire handle. At no time during APU start should the inflight APU start limit be exceeded.

FLIGHT ENGINEER

Note

After an APU Cont switch is placed to STOP, the inlet door will not close until the airspeed is reduced below 170 KCAS.

INFLIGHT AUXILIARY POWER UNIT COMPARTMENT FIRE.

If a fire in either APU compartment is indicated, proceed as follows:

PILOTS	FLIGHT ENGINEER	SCANNER
	1. APU FIRE HANDLE — PULLED	
	2. AGENT — DISCHARGED	
	Note If fire persists, select and discharge alternate fire extinguishing agent bottle. Assure that the on speed light goes off for positive indication of APU shutdown prior to discharging the alternate bottle. If the on speed light does not go off, place the affected APU Cont switch to STOP and discharge the alternate bottle.	
	3. APU Cont Switch - STOP	
	4. APU Generator Selector Switch - AS REQUIRED Select operating APU or start the other APU if required to supply airplane electrical power.	
	5. ATM - OFF Turn the affected ATM OFF.	
	6. Hydraulic Boost Pump - OFF Turn off the affected hydraulic boost pump.	
	7. APU Iso Valve - CLOSE Close the affected APU ISO Valve.	
	8. APU Area Scan - "COMPLETED" (S)	1. APU Area Scan - "COMPLETED" (S) Feel cargo compartment wall for excessive heat at APU area.
	9. APU Fire Checks - "COMPLETED" (E)	

INFLIGHT PTU COMPARTMENT FIRE (FSS INSTALLED).

On airplanes modified by T.O. 1387, if a fire in either PTU compartment is indicated, proceed as follows.

PILOTS	FLIGHT ENGINEER	SCANNER
	1. FSS – ARMED	
	2. ZONE ALARM PUSHBUTTON – DEPRESSED	
	Depress the illuminated zone alarm pushbutton. If fire is detected visually, depress the appropriate zone pushbutton.	
	Note	
	If the fire persists, a repeated discharge cycle of agent into the compartment may be accomplished only after the flow light goes off.	
	3. Affected PTU - OFF	

PRACTICE MANEUVERS WITH ONE OR MORE ENGINES INOPERATIVE.

WARNING

When simulating the loss of two engines on the same side of the airplane, power and trim adjustments must be made carefully and the airspeed must be maintained well above minimum control speed.

WARNING

Do not practice engine-out maneuvers simultaneously with flight control system failure. This could result in an uncontrollable condition.

Engine failure can be simulated for practice by retarding a throttle to IDLE. This does not exactly duplicate an engine failure but the reduction of thrust will provide control and maneuverability problems essentially the same as a complete loss of thrust.

Engine Overheating.

An engine overheat condition is indicated by a flashing overheat light on the pilots' center instrument panel and a flashing fire light on the flight engineer's console. If the overheat condition occurs in flight, retard the throttle on the affected engine, and observe whether the overheat condition is corrected. If the overheat light goes off, return the throttles to the original power setting and check again for overheating. If overheating is again indicated, operate the engine at a reduced power setting. If the overheat condition persists after the throttle is retarded, shut down the engine in accordance with the Precautionary Engine Shutdown checklist and observe it closely for evidence of fire. If the overheat condition occurs while the airplane is on the ground, shut down the engine and have the condition corrected before attempting another start.

Nacelle Bleed Air Duct Failure.

Nacelle duct failure will be indicated by higher than normal TIT and will probably be accompanied by an associated drop in EPR and/or engine overheat. The TIT increase will be proportioned to throttle position and the size of the leak in the duct system and could reach 150 to 200 degrees above normal. If the overheat light goes out with power reduction, scan the engine for evidence of burn through or blow out. If bleed duct failure is confirmed or overheat light remains on shutdown the engine in accordance with the Precautionary Engine Shutdown checklist.

Fuselage Fire (FSS INSTALLED).

On airplanes modified by T.O. 1387, in the event of a fuselage fire, proceed as follows:

PILOTS	FLIGHT ENGINEER	LOADMASTER/SCANNER
	1. FSS — ARMED	
	2. ZONE ALARM PUSHBUTTON — DEPRESSED	
	Depress the illuminated zone alarm pushbutton. If fire is detected visually, depress the appropriate zone pushbutton.	
	Note	
	If a fire persists in the underfloor area (fwd, mid, or aft), a repeated discharge cycle of nitrogen into the compartment may be accomplished only after the flow light goes off.	
	Note	
	If a cargo compartment fire persists and the Cargo Volume Selector switch is in other than the UNDER 10,000 CU FT position, additional FE1301 agent may be made available by selecting UNDER 10,000 CU FT and depressing the Cargo pushbutton. Only one discharge of FE1301 agent is available for the avionics and center wing areas.	

PILOTS	FLIGHT ENGINEER	LOADMASTER/SCANNER
1. OXYGEN MASKS — ON	3. Oxygen Mask - ON	1. Oxygen Mask - ON/CONNECT TO PORTABLE BOTTLE
The pilot shall direct all crew members to don oxygen mask and smoke masks. The pilot shall direct a crew member to turn on the continuous flow oxygen regulators.		
If time and conditions permit, the pilot shall direct the loadmaster/scanner to have all personnel return to their assigned seats.	4. Recirculation Fan - OFF	Report to pilot that all personnel have returned to their seats and that personnel in the cargo compartment have donned oxygen masks.
	5. Floor Heat Fan - OFF	

WARNING

When FE1301 is discharged into the cargo compartment, visibility is so restricted, that personnel movement would probably result in personal injury.

As directed by the pilot, all crew members not engaged in control of the airplane shall proceed to fight the fire if the fire has not been extinguished by the fire suppression system.

WARNING

Prolonged exposure (5 minutes or more) to high concentrations of bromochloromethane (CB) or bromotrifluromethane (FE1301) and their decomposition products should be avoided. (CB will cause pronounced irritation of eyes and nose. FE1301 will cause dizziness, imparied coordination, and reduced vision.) CB and FE 1301 are anesthetic agents of moderate intensity. They are safer to use than previous fire extinguishing agents (carbon tetrachloride, methylbromide). However, especially in confined spaces, adequate respiratory and

PILOTS	FLIGHT ENGINEER	LOADMASTER/SCANNER
eye protection from excessive exposure including the use of oxygen when available, should be sought as soon as the primary fire emergency will permit.		
2. No Smoking Light - "ON" (CP)		
3. Pressurization - "AS REQUIRED (P, E) When the fire is uncontrolled, direct the flight engineer to increase cabin altitude to reduce oxygen available to the fire. Complete depressurization at altitude should not be directed until oxygen availability to the crew/troops and severity of the fire have been evaluated.	6. When directed by pilot: Pressurization - "AS REQUIRED" (E)	
4. Engineer's Report - "CHECK COMPLETED" (E)	7. Engineer's Report - "CHECK COMPLETED" (E)	
5. No Smoking Light - "OFF" (CP)		
6. Fuselage Fire Check - "COMPLETED" (CP)		

Fuselage Fire (FSS Not Installed).

On airplanes not modified by T.O. 1387, in the event of a fuselage fire, proceed as follows:

PILOTS

1. OXYGEN MASKS – ON

The pilot shall direct all crew members to don oxygen mask and smoke goggles, or use smoke masks. The pilot shall direct a crew member to turn on the continuous flow oxygen regulators if required.

As directed by the pilot, all crew members not engaged in control of the airplane shall proceed to fight the fire.

WARNING

Prolonged exposure (5 minutes or more) to high concentrations of bromochloromethane (CB) or its decomposition products should be avoided. (It will cause pronounced irritation of eyes and nose.) CB is an anesthetic agent of moderate intensity. It is safer to use than previous fire extinguishing agents (carbon tetrachloride, methylbromide). However, especially in confined spaces, adequate respiratory and eye protection from excessive exposure, including the use of oxygen when available, should be sought as soon as the primary fire emergency will permit.

FLIGHT ENGINEER

1. Oxygen Mask - ON

LOADMASTER SCANNER

1. Oxygen Mask - ON/CONNECT TO PORTABLE BOTTLE

PILOTS	FLIGHT ENGINEER	LOADMASTER/SCANNER
2. No Smoking Light - "ON" (CP)	When directed by pilot:	
3. Pressurization - "AS REQUIRED" (P,E) When the fire is uncontrolled, direct the flight engineer to increase cabin altitude to reduce oxygen available to the fire. Complete depressurization at altitude should not be directed until oxygen availability to the crew/troops and severity of the fire have been evaluated.	2. Pressurization - "AS REQUIRED" (E)	
4. Engineer's Report - "CHECK COMPLETED" (E)	3. Engineer's Report - "CHECK COMPLETED" (E)	
5. No Smoking Light - "OFF" (CP)		
6. Fuselage Fire Check - "COMPLETED" (CP)		

Wing and/or Pylon Fire (FSS INSTALLED).

On airplanes modified by T.O. 1387, proceed as follows:

PILOTS	FLIGHT ENGINEER	SCANNER
1. Wing Scan - "AS REQUIRED" (P,S) The pilot shall direct the scanner to visually check affected wing for exact location of fire and for structural damage. If the fire cannot be extinguished, land as soon as possible, prepare to abandon the airplane, crash land, or ditch. Increasing airspeed will sometimes aid in extinguishing the fire.	1. FSS – ARMED 2. ZONE ALARM PUSHBUTTON – DEPRESSED Depress the illuminated zone alarm pushbutton. If fire is detected visually, depress the appropriate zone pushbutton. **Note** If the fire persists, a repeated discharge cycle of agent into the compartment may be accomplished only after the flow light goes off. 3. FUEL ISOLATION VALVES – CLOSED Close the fuel isolation valves on the affected wing. 4. FUEL BOOST PUMPS – OFF Turn off all boost pumps for the affected wing. 5. CENTER FUEL SEPARATION VALVE – CLOSED 6. GENERATORS – OFF Turn off generators for the affected wing.	1. Wing Scan - " AS REQUIRED" (S) Report location of fire and condition of wing or pylon.

PILOTS | FLIGHT ENGINEER | SCANNER

7. Fuel Crossfeed Valve - CLOSED

   Close the crossfeed valve on the affected wing.

8. Affected Fuel Separation Valve - CLOSED

9. Bleed Valves - CLOSED

   Close the bleed air shutoff valves for the engines on the affected wing.

10. PTUs - OFF

    Turn off PTU in affected wing.

11. Hydraulic Pumps - DEPRESS

    Depressurize hydraulic pumps in the affected wing, one system at a time. Wait approximately 2 seconds after one pump is depressurized before depressurizing the other pump. Monitor hydraulic quantity indicators for system fluid loss.

WARNING

If systems 1 and 2 are depressurized, hydraulic pressure for pitch trim will be lost.

12. Bleed Air Isolation Valve - CLOSED

    Close the wing bleed air isolation valve for the affected wing. If the fire extinguishes perform the following:

PILOTS	FLIGHT ENGINEER	SCANNER
	13. Fuel Boost Pumps - ON Do not use boost pumps that were operating at time of fire.	
	14. Generators - ON Turn generators on only after determining that they did not cause the fire.	
	15. Bleed Valves - OPEN Open bleed valves one at a time only after determining that they did not cause the fire.	
	16. Bleed Air Isolation Valve - OPEN	
	17. Hydraulic Pumps - NORM Place the Hydraulic Pump switches to NORM, one system at a time. Wait approximately 2 seconds after one pump is pressurized before pressurizing the other pump. Monitor appropriate hydraulic system pressure and quantity indicators. **CAUTION** Do not pressurize hydraulic pumps for a system that has indicated a loss of fluid.	
2. Engineer's Report - "CHECK COMPLETED" (E)	18. Engineer's Report - "CHECK COMPLETED" (E)	

Wing Fire (FSS Not Installed).

On airplanes not modified by T.O. 1387, proceed as follows:

PILOTS	FLIGHT ENGINEER	SCANNER
1. Wing Scan - "AS REQUIRED" (P, S) The pilot shall direct the scanner to visually check affected wing for exact location of fire and for structural damage. If the fire cannot be extinguished, land as soon as possible, prepare to abandon the airplane, crash land, or ditch. Increasing	1. FUEL ISOLATION VALVES — CLOSED Close the fuel isolation valves on the affected wing. 2. FUEL BOOST PUMPS — OFF Turn off all boost pumps for the affected wing.	1. Wing Scan - "AS REQUIRED" (S) Report location of fire and condition of wing.

PILOTS

airspeed will sometimes aid in extinguishing the fire.

FLIGHT ENGINEER

3. CENTER FUEL SEPARATION VALVE – CLOSED
4. GENERATORS – OFF

   Turn off generators for the affected wing.

5. Fuel Crossfeed Valve - CLOSED

   Close the crossfeed valve on the affected wing.

6. Affected Fuel Separation Valve - CLOSED
7. Bleed Valves - CLOSED

   Close the bleed air shutoff valves for the engines on the affected wing.

8. PTUs - OFF

   Turn off PTU in affected wing.

9. Hydraulic Pumps - DEPRESS

   Depressurize hydraulic pumps in the affected wing, one system at a time. Wait approximately 2 seconds after one pump is depressurized before depressurizing the other pump. Monitor hydraulic quantity indicators for system fluid loss.

WARNING

If systems 1 and 2 are depressurized, hydraulic pressure for pitch trim will be lost.

10. Affected Hydraulic Boost Pump - OFF
11. Wing Isolation Valve - CLOSED (AFFECTED WING)

    If the fire extinguishes perform the following:

12. Fuel Boost Pumps - ON

    Do not use boost pumps that were operating at time of fire.

13. Generators - ON

    Turn generators on only after determining that they did not cause the fire.

14. Bleed Valves - OPEN

    Open bleed valves one at a time only after determining that they did not cause the fire.

SCANNER

PILOTS	FLIGHT ENGINEER	SCANNER
	15. Wing Isolation Valve - OPEN	
	16. Hydraulic Pumps - NORM Place the Hydraulic Pump switches to NORM, one system at a time. Wait approximately 2 seconds after one pump is pressurized before pressurizing the other pump. Monitor appropriate hydraulic system pressure and quantity indicators. **CAUTION** Do not pressurize hydraulic pumps for a system that has indicated a loss of fluid.	
2. Engineer's Report - "CHECK COMPLETED" (E)	17. Engineer's Report - "CHECK COMPLETED" (E)	

Left or Right Duct Overheat.

PILOTS	FLIGHT ENGINEER	SCANNER
	1. Wing Isolation Valve - CLOSED (AFFECTED WING)	
	2. Bleed Valves - CLOSED Affected side only. Ensure that affected system pressure indicator reads 0 PSI. This is to assure that both bleed valves and the wing isolation valve are in the closed position. If the affected system pressure regulator indicator does not indicate 0 PSI, cross reference bleed valve lights and EPR variations to determine which bleed valve did not close. Conditions permitting, the engine with the bleed valve open should be shut down.	
	3. Air Cond Master Switch - AS REQUIRED Place to operating side. **CAUTION** If the overheat light comes on during any of the following steps, return the system to the configuration in the preceeding step.	
	4. Ovht Test Switch - RESET	
	5. Bleed Valves - OPEN	
	6. Wing Isolation Valve - OPEN	
	7. Air Cond Master Switch - BOTH	

Center Duct Overheat.

PILOTS	FLIGHT ENGINEER	SCANNER
	1. Wing Isolation Valves - CLOSED	
	2. APU Iso Valves - CLOSED	
	3. Floor Heat - OFF	
	4. APU Bleed Valves - CLOSED	
	5. ATMs - OFF	
	6. Sys No. 1 and No. 4 Hydraulic Boost Pumps - OFF	
	If the center duct overheat light goes off, an attempt may be made to restore the system to normal by placing the center duct Ovht Test switch to RESET.	
	A center duct overheat can be isolated between the wing isolation valves and the APU isolation valves or between an APU bleed valve and its respective isolation valve.	
	7. Wing Isolation Valves - OPEN	
	If the center duct overheat light comes on when the manifold is repressurized, return the Wing Isolation Valve switches to CLOSE.	
	If it can be determined that there is no bleed air leak between an APU bleed valve and its respective isolation valve, APU bleed air may be used to operate its respective ATM. Close the wing and APU isolation valves and place the center duct Ovht Test switch to RESET before starting the APU.	

Electrical Fire.

The flight engineer will read this checklist due to limited communications between the pilot and copilot.

If a fire is determined to be of electrical origin, attempt to isolate the faulty circuit. If the faulty circuit cannot be quickly identified, perform the following steps:

PILOTS	FLIGHT ENGINEER	SCANNER
1. OXYGEN MASKS — ON	1. Oxygen Mask - ON	1. Oxygen Mask - ON/ CONNECT TO PORTABLE BOTTLE

PILOTS	FLIGHT ENGINEER	LOADMASTER/ SCANNER
The pilot shall direct all crew members to don oxygen masks and smoke goggles or use smoke masks. As directed by the pilot, all crew members not engaged in control of the airplane shall proceed to fight the fire. The pilot shall direct a crew member to turn on the continuous flow oxygen regulators, if required. **WARNING** Prolonged exposure (5 minutes or more) to high concentrations of bromochloromethane (CB) or its decomposition products should be avoided. (It will cause pronounced irritation of eyes and nose.) CB is an anesthetic agent of moderate intensity. It is safer to use than previous fire extinguishing agents (carbon tetrachloride, methylbromide). However, especially in confined spaces, adequate respiratory and eye protection from excessive exposure, including the use of oxygen when available, should be sought as soon as the primary fire emergency will permit.	2. Fuel Isolation Valves - CLOSED **WARNING** Removing electrical power from the fuel boost pumps while the fuel isolation valves are in the open position will cause engine flameout if the auxiliary or extended range tanks are empty.	
2. No Smoking Light - "ON" (P)	3. No Smoking Light - "ON" (P)	
3. RAT - "AS REQUIRED" (P) If the No. 2 hydraulic system is powered by the engine driven pumps, place the RAT switch to RETRACT. If the No. 2 hydraulic system is powered only by the PTUs, place the RAT switch to DEPLOY.	4. RAT - "AS REQUIRED" (P)	
4. Inst Power Switch - "EMERG" (P)	5. Inst Power Switch - "EMERG" (P)	
5. Generators - "OFF" (P, E) The pilot shall direct the flight engineer to turn off all generators and locate the source of the electrical fire.	6. Generators - "OFF" (P, E) When directed by the pilot, turn off the generators and locate the source of the fire. 7. Bus Tie Switches - OPEN If fire extinguishes, and source is not identified, turn generators on one at a time to identify source of fire.	

PILOTS	FLIGHT ENGINEER	LOADMASTER/ SCANNER

WARNING

Establish level flight prior to turning off the generators to prevent engine flameout when the fuel boost pumps stop operating. Refer to Engine Suction Feed Limitations (Main Tank to Engine Feed) in Section V.

6. Iso Bus Switch - "OFF" (P, E)

   If source of fire is not eliminated by turning generators off, direct the flight engineer to turn off the Iso Bus switch.

8. Iso Bus Switch - "OFF" (P, E)

9. Battery Switch - "OFF" (E)

   a. If the fire does not go out, the fire is on the emergency AC or DC buses.

      Accomplish the following:

      (1) Battery Switch - ON

      (2) Return Generator switches to ON.

      (3) Request the pilot to place the Inst Power switch to OFF.

      (4) Open the emergency DC power feeder circuit breakers (2) on the DC load center.

      (5) Open the isolated AC bus power feeder circuit breakers (3) on the AC load center.

   b. If the fire goes out, attempt to isolate the source of the fire by the following steps:

      (1) Open the battery bus power, bus 1 and bus 2 circuit breakers on the DC load center.

      (2) Open the isolated AC bus power feeder circuit breakers (3) on the AC load center.

      (3) Open the isolated DC bus power feeder circuit breakers (4), the avionics isolated DC bus power feeder circuit breaker, the main DC bus 2 power feeder circuit breakers (3) and the main DC bus 1 power feeder circuit breakers (3) on the DC load center.

PILOTS	FLIGHT ENGINEER	LOADMASTER/ SCANNER
	(4) Open the transformer rectifier 1 and 2 circuit breakers on the AC load center.	
	(5) Turn each Generator switch to ON.	
	(6) Close the battery bus power, bus 1 and bus 2 circuit breakers, one at a time.	
	(7) Close the isolated DC bus power feeder circuit breakers, one at a time.	
	(8) Close the isolated DC avionics bus power feeder circuit breaker.	
	(9) Close the isolated AC bus power feeder circuit breakers, one at a time.	
	(10) Close the transformer rectifier 1 and 2 circuit breakers, one at a time.	
	(11) Close the main DC bus 1 and main DC bus 2 power feeder circuit breakers, one at a time.	
	Note If the source of the fire is determined during steps (5), (6), (7), or (8) of the above procedure, de-energize the source by opening the respective circuit breaker(s) and restore normal electrical power.	
7. Inst Power Switch - "AS REQUIRED" (P, E) Place the Inst Power switch to the NORMAL position when requested by the flight engineer.	10. Inst Power Switch - "AS REQUIRED" (P, E) a. If the source of fire is located and isolated from the emergency AC or DC buses, request the pilot to place the Inst Power switch to the NORMAL position.	
	b. If the fire is located on the emergency AC or DC bus (and cannot be isolated), the isolated AC bus may be powered by using the following procedure:	

PILOTS	FLIGHT ENGINEER	LOADMASTER/ SCANNER
	(1) Open the Emergency Generator Power Feeder (circuit breakers) located by the emergency generator	
	(2) Place the Inst Power switch to the EMERG position.	
	(3) Close the Isolated AC Bus Power Feeder circuit breakers.	
	11. Electrical Panel - AS REQUIRED Restore normal electrical power to circuits not damaged by the fire.	
	a. Battery Switch - AS REQUIRED	
	b. Iso Bus Switch - AS REQUIRED	
	c. Bus Tie Switches - AS REQUIRED	
8. RAT - "AS REQUIRED" (P, E)	12. RAT - "AS REQUIRED" (P, E) Request the pilot to retract the RAT, if it was deployed, and place the RAT switch to AUTO after two generators are on.	
	13. Pressurization - AS REQUIRED	
9. No Smoking Light - "OFF" (P)	14. No Smoking Light - "OFF" (P)	
	15. Electrical Fire Check - "COMPLETED" (E)	

SMOKE AND FUME ELIMINATION.

If the pressurized area is rapidly filling with smoke and fumes, it may be necessary to make an emergency descent to an altitude not requiring oxygen and to depressurize and ventilate the airplane.

Ventilation with Airplane Pressurized.

With the airplane pressurized, the flight engineer will attempt to ventilate the affected compartment as follows:

PILOTS	FLIGHT ENGINEER	LOADMASTER/ SCANNER
1. OXYGEN MASKS — ON The pilot shall direct all crew members to don oxygen mask and smoke goggles or use smoke mask.	1. Oxygen Mask - ON	1 Oxygen Mask - ON/CONNECT TO PORTABLE BOTTLE
	2. Flight Station, Relief Crew and Courier Compartments - VENTILATE	
	a. Air Cond Master Switch - BOTH	
	b. Airflow switch - MAX UPR DECK	
The pilot shall direct a crew member to turn on the continuous flow oxygen regulators, if required	c. Flight Station Ladder Entrance Door - OPEN	

PILOTS	FLIGHT ENGINEER	LOADMASTER/ SCANNER
	d. Environmental Compartment Door - OPEN	
2. No Smoking Light - "ON" (CP)	3. Cargo Compartment - VENTILATE	
	a. Air Cond Master Switch - BOTH	
	b. Airflow Switch - NORM	
	c. Flight Station Ladder Entrance Door - CLOSED	
	d. Environmental Compartment Door - CLOSED	
	4. Troop Compartment - VENTILATE	
	a. Air Cond Master Switch - BOTH	
	b. Troop Compt Switch - NORM	
	c. Airflow Switch - MAX UPR DECK	

If smoke and fumes emission is not reduced to a satisfactory level after the flight engineer has accomplished the appropriate compartment ventilation procedure, the pilot should direct the flight engineer to depressurize the airplane with the procedure that follows. If troops are on board, immediately descend to an altitude of 25,000 feet or below which will permit the use of troop oxygen. If troops are not aboard, the pilot may elect to remain at altitude.

3. Engineer's Report - "CHECK COMPLETED" (P, E)	5. Engineer's Report - "CHECK COMPLETED" (E)
4. No Smoking Light - "OFF" (CP)	
5. Smoke and Fume Elimination Check - "COMPLETED" (CP)	

Ventilation with Airplane Unpressurized.

With the airplane unpressurized, the flight engineer will attempt to ventilate the affected compartments as follows:

PILOTS	FLIGHT ENGINEER	SCANNER
	1. Flight Station, Relief Crew and Courier Compartments - VENTILATE	
	a. Emergency Depressurization Switch - EMERG DEPRESS	
	b. Air Cond Master Switch - AUX VENT	
	c. Airflow Switch - MAX UPR DECK	

PILOTS FLIGHT ENGINEER SCANNER

d. Flight Deck-to-Cargo Compartment Access Hatch - OPEN

e. Environmental Compartment Door - OPEN

2. Cargo Compartment - VENTILATE

a. Emergency Depressurization Switch - EMERG DEPRESS

b. Air Cond Master Switch - AUX VENT

c. Airflow Switch - NORM

3. Troop Compartment - VENTILATE

a. Emergency Depressurization Switch - EMERG DEPRESS

b. Troop Compt Switch - NORM

c. Air Cond Master Switch - AUX VENT

d. Airflow Switch - MAX UPR DECK

CAUTION

Opening of hatches and clear vision windows is not recommended as an aid for smoke and fume removal in the forward upper deck area due to the powerful suction generated by these openings which will pull all smoke, fumes, and possible fire, into the flight station area. However, under critical conditions of smoke in the flight station area, after the fire has been extinguished, the No. 1 emergency escape hatch may be opened to expedite smoke removal at airspeeds below 250 KCAS. This procedure should not be used if toxic fumes are present in the cargo compartment.

PILOTS	FLIGHT ENGINEER	SCANNER
	Note In the flight station area only, heavy smoke or fumes will be drawn to the main instrument panel and through the MADAR console by action of the cooling fan. It is recommended that the MADAR system be turned off and the flight engineer's cooling fan circuit breaker on the flight engineer's No. 1 circuit breaker panel be opened.	
1. Engineer's Report - "CHECK COMPLETED" (P, E) 2. No Smoking Light - "OFF" (CP) 3. Smoke and Fume Elimination Check - "COMPLETED" (CP)	4. Engineer's Report - "CHECK COMPLETED" (E)	

BLEED AIR SMOKE ELIMINATION.

This procedure will be used to eliminate smoke and fumes emanating from the engine bleed system or the air conditioning packs. Any system suspected of causing smoke or fumes should be isolated first.

PILOTS	FLIGHT ENGINEER	LOADMASTER/ SCANNER
1. OXYGEN MASKS – ON The pilot shall direct all crew members to don oxygen mask and smoke goggles or use smoke mask. The pilot shall direct a crew member to turn on the continuous flow oxygen regulators if required. 2. No Smoking Light - "ON" (CP)	1. Oxygen Mask - ON If smoke and fumes are emanating from the air conditioning and pressurization system, proceed as follows: 2. Left Duct Ovht Test Switch - TEST Check that left duct pressure drops to 0. If smoke and fumes persist proceed as follows: 3. Air Cond Master Switch - RIGHT 4. Left Duct Ovht Test Switch - RESET Check that left duct pressure returns to normal. 5. Air Cond Master Switch - LEFT 6. Right Duct Ovht Test Switch - TEST Check that right duct pressure drops to 0. If smoke and fumes still persist after performing step 6, it may be assumed that the malfunction is within the air conditioning duct system inside the airplane.	1. Oxygen Mask - ON/CONNECT TO PORTABLE BOTTLE

PILOTS	FLIGHT ENGINEER	LOADMASTER/ SCANNER
	If smoke and fumes cease after performing either step 2 or 6 of the above checklist, the malfunction may be traced to one of the following items by employing troubleshooting/isolation procedures: Engine bleed air system (one or more engines) APU bleed air system Floor heat system Left or right air conditioning system	
	When directed by pilot:	
3. Pressurization - "AS REQUIRED" (P, E) If smoke and fumes emission is not reduced to a satisfactory level after step 6 of the flight engineer's checklist has been completed, the pilot should direct the flight engineer to depressurize the airplane. If troops are on board, immediately descend to an altitude of 25,000 feet or below which will permit the use of troop oxygen. If troops are not aboard, the pilot may elect to remain at altitude.	7. Pressurization - "AS REQUIRED" (E) If depressurization is required select AUX VENT on the Air Cond Master switch after depressurizing and open the outflow valves to provide maximum ventilation.	
4. Engineer's Report - "CHECK COMPLETED" (E)	8. Engineer's Report - "CHECK COMPLETED" (E)	
5. No Smoking Light - "OFF" (CP)		
6. Bleed Air Smoke Elimination Check - "COMPLETED" (CP)		

BAILOUT PROCEDURE.

Bailout exits are shown in figure 3-5. The troop doors are the primary bailout exits.

Give the bailout warning over the public address system and sound three short blasts on the warning horn.

The navigator will report the airplane position to the pilot for transmission to a radio facility.

Reduce airspeed to a minimum consistent with the conditions causing the emergency, if possible, descend to an altitude where supplemental oxygen is not required.

Depressurize the airplane.

Head the airplane toward an isolated area and engage the autopilot.

Open the troop doors. Extend the paratroop spoilers, if installed.

WARNING

Do not release the door until it is locked in the up position. Injury may result should the door fall free.

Loadmaster shall inform pilot when actions are complete.

Give the abandon airplane signal over the public address system and sound one long blast on the warning horn.

Evacuate the airplane.

Crew members shall make a very positive push out from the airplane to keep from contacting the aft part of the door.

EMERGENCY DESCENT.

A high-rate descent from altitude may be necessitated by such emergencies as loss of cabin pressure, structural failure, or fire. The cause of emergency must be considered before attempting a high-rate descent. For instance, if a cabin pressure loss is due to structural failure, a maximum-rate descent may be more serious than operating unpressurized at altitude. The pilot must consider the emergency, and modify the descent accordingly. Use the Rapid Descent procedure in Section II. Refer to T.O. 1C-5A-1-1 for rapid descent performance data.

EMERGENCY DEPRESSURIZATION.

a. Don oxygen masks if necessary.

b. Emergency Depressurization Switch - EMERG DEPRESS.

Note

The pressurization outflow valve indicator will be unreliable when EMERG DEPRESS is selected. The indicator will move to open whether the outflow valve is open or not.

INFLIGHT DOOR WARNING.

CAUTION

If a forward ramp not lkd light comes on, do not attempt to lock the ramp. Structural damage may occur.

Pressure Door Unlocked Indication.

A press door open light on the pilots' and flight engineer's annunciator panel coming on indicates that one of the following doors is unlocked: crew entrance door, aft pressure door, visor, forward ramp, aft ramp.

The Pilot Shall:

a. Direct copilot to turn on seat belt and no smoking lights.

b. Direct crew members to don oxygen masks and use oxygen as required.

c. Begin descent and/or depressurization.

d. After depressurization, direct the scanner to locate the malfunctioning door if possible.

e. If the aft ramp locks indicate a not locked condition, the aft ramp may be relocked if mission requires.

CAUTION

The flight engineer must turn off the air conditioning and under floor heat and have zero cabin pressure and the outflow valve open prior to the ramp locks being operated.

Flight Engineer Shall:

a. Don oxygen mask and use oxygen as required.

b. Depressurize if directed by pilot (2,000 FPM minimum).

c. Air conditioning and underfloor heat off, zero cabin pressure and outflow valve full open prior to operating the aft ramp locks.

Scanner Shall:

a. Don oxygen mask and use oxygen.

b. After depressurization and when directed by the pilot, locate the malfunctioning door.

c. If the aft ramp indicates an unlocked condition, the ramp may be relocked upon direction of the pilot.

d. Aft Ramp Locks - LOCKED

The Pilot Shall:	Flight Engineer Shall:	Scanner Shall:
		To lock the aft ramp locks, proceed as follows: (1) Push and hold valve G (2) While holding valve G, push and hold valve A (3) While holding G and A, push valve H (4) Release G while holding A and H (5) Release A and H

WARNING

A personnel restraining harness shall be worn by personnel when inspecting the doors. Do not use the ground personnel restraint kit.

If after inspection, the crew can identify that a single visor lock is not locked, the flight may be continued pressurized.

If the door open light goes off during depressurization, and if it cannot be determined what caused the light to come on, the flight may be continued, at the discretion of the pilot, with the airplane pressurized below the point where the light came on. If depressurization is required for door inspection and if troops are not on board, the pilot may elect to have the flight crew go on oxygen, depressurize the airplane, and conduct the door inspection at altitude.

If all the doors are secured and if it can be positively determined that the door open light comes on because of a limit switch malfunction, the airplane may be fully pressurized and the affected Door Not Lkd Light assembly depressed to BYPASS.

Unpressurized Door Unlocked Indication.

An unpress door open light on the pilots' annunciator panel indicates that one of the following doors is unlocked: horizontal stabilizer access door, center cargo door, left or right cargo side doors, left or right troop door, forward underfloor compartment door, aft service door, flight deck service door or aft ramp hatch. If a door not lkd light, by the forward service door, or on the forward or aft loadmaster's control panel, is on but the door is closed and locked, depress the Door Not Lkd Light assembly to BYPASS, and continue the mission.

Any door included in the door warning circuit may be partially open/not locked.

The Pilot Shall:	Flight Engineer Shall:	Scanner Shall:
a. Have the scanner check all door lock warning lights for an indication of which door is causing the door open light to be on.		a. Inspect door not lkd lights. Advise pilot. b. If it is determined that the door is locked and a false warning exists, place the affected Door Not Lkd Light assembly to BYPASS.

The Pilot Shall: Flight Engineer Shall: Scanner Shall:

WARNING

Do not unlock door and attempt to relock while pressurized since cabin pressure may force the door outward, resulting in damage and failure to relock.

b. If it is determined that either or any of the empennage access door, the aft side cargo doors, or the center cargo door are causing the door open light to be on, the mission may, if necessary, be continued. The aft side cargo doors can not come open if the center cargo door is locked. They may however be inspected by depressurizing the airplane and opening the side seals on the pressure door. If inspection reveals that the doors are unlocked, the results of proceeding at unrestricted airspeeds may be as follows:

Aft Side Cargo Doors - May be lost at any speed.

Center Cargo Door -

Up to 205 KCAS - No damage.
Up to 250 KCAS - A probability of minor damage to the door.
Above 250 KCAS - A probability that the door be lost.

RAPID DECOMPRESSION.

Rapid decompression occurs when the cabin pressure is rapidly reduced to outside pressure. This may result from losing a door or window or from a rupture in the fuselage skin. When rapid decompression occurs, the pilot should immediately begin a descent to normal breathing altitude, and all crew and troops shall breathe 100 percent oxygen. An inspection of the airplane should be conducted to ascertain the cause of the trouble. If pressure loss occurred because of structural failure, the flight should be completed at a safe speed and altitude, as determined by the pilot.

The pilot shall ensure that crew members are using 100 percent oxygen, that the no smoking and seat belt lights are on, and that a descent is initiated, if required. Each crew member will report when he is using 100 percent oxygen and give the status of his respective crew station.

WINDSHIELD IMPAIRMENT.

None of the following windshield malfunctions is anticipated to degrade the structural integrity of the windshield to the point that the airplane must be depressurized. The glass in the windshield can be cracked or crazed so badly that vision is completely obscured and still retain the necessary structural strength to permit full pressurization.

a. Arcing or bubbling - Turn Windshield Heat OFF

b. Cracking -

Outer Ply - Turn Windshield Heat OFF

Note

A cracked inner ply can be detected by scraping a finger nail across the crack.

Inner Ply - Proceed normally

c. Delamination, distortion, or loss of windshield heat - Proceed normally. The windshield heat may be turned off at the pilot's discretion.

Note

For all of the above malfunctions, do not turn off the windshield heat if clear vision is necessary for safe flight.

The structural integrity of the windshields is not a problem with the above conditions, except that bird-proofing capabilities are reduced without windshield heat. Delamination by itself should not be cause for windshield replacement unless it has reached such proportions that vision is impaired.

FUEL JETTISON.

The average jettison rate is approximately 9,000 pounds per minute from the auxiliary and extended range tanks. This rate assumes that all tanks are full at start of jettisoning and that no fuel is used during the operation. If one pump in any of several tanks should fail, all the fuel can still be dumped because each tank contains two pumps. The only effect is the greater length of time required. If one of the separation or jettison valves fails to open, the center separation valve can be opened and the affected tanks can be dumped from the opposite side of the airplane. Again the only effect is to extend the time of jettisoning. In case of either failure, spanwise balance will be affected but can be controlled by proper operation of boost pumps. While not necessary to meet landing weights, all or any portion of the fuel in main tanks can be jettisoned in an emergency. This can be done (after all other fuel has been jettisoned) by opening the isolation valves and pumping into the manifold and overboard all fuel not required by the engines. Careful attention must be paid to tank quantity indicators, fuel pressure lights, and system management during this type of operation because pumps in these tanks are supplying their associated engines at the same time. Jettisoning from the main tanks while jettisoning from the auxiliary and extended range tanks does not increase jettison rate. No provisions are made for reserving a quantity of non-jettisonable fuel.

Jettison Precautions.

The following precautions should be observed during fuel jettison:

Do not jettison when flying close to the ground. Maintaining altitude will prevent the fuel vapors from being ignited by a ground source.

To avoid flying through the jettisoned fuel, do not jettison in a circular, descending pattern.

Do not smoke during jettison.

After jettison is complete, inspect the airplane for fuel fumes.

Fuel Jettison.

The pilot shall direct the flight engineer when to commence jettisoning and the amount of fuel to be retained. The flight engineer shall acknowledge, commence jettisoning and report when jettisoning is complete.

PILOTS	FLIGHT ENGINEER
	1. Jettison Switches - "JETTISON" (E)
	2. All Auxiliary and Extended Range Fuel Boost Pumps - ON
	3. Left and Right Fuel Separation Valves - OPEN
	4. Fuel Isolation valves - AS REQUIRED Close unless fuel is to be jettisoned from the main tanks.

PILOTS	FLIGHT ENGINEER
	5. Auxiliary and Extended Range Boost Pumps - OFF Turn Boost Pumps OFF for each tank when desired fuel has been jettisoned. 6. Jettison Switches - CLOSED 7. Left and Right Fuel Separation Valves - CLOSED 8. Report - "FUEL JETTISONING COMPLETED POUNDS REMAINING" (E)

CARGO JETTISON PROCEDURES.

WARNING

When a personnel safety harness is required by the following procedures, do not use the ground personnel restraint kit.

Cargo jettison is defined as the planned and controlled gravity ejection of hazardous cargo under emergency conditions. If an emergency precludes a planned systematic approach to cargo jettison, as outlined below, judgment must be exercised in accordance with the nature of the emergency.

During jettison, both before and after the ejection of each individual cargo package, it is mandatory to maintain the center of gravity within the operating envelope specified in Section V. During jettison, limit flight maneuvering to the minimum absolutely necessary for safe operation. Refer to Section V for maximum allowable airspeed with the ramp and center cargo door open and the flaps extended.

Jettison operations may be conducted from either the aerial delivery configuration or the logistic configuration of the airplane. The detailed procedures for these operations are described in the following paragraphs. A minimum of two persons are recommended for these jettison procedures. General procedures which are applicable to all jettison operations are as follows:

The side cargo doors are designed for ground operation use only and shall not be opened in flight. Refer to Section V for airspeed limits with the center cargo door and ramp open in flight.

CAUTION

During jettison of cargo from the ADS or logistics configuration, a jettisoned load may strike the side doors knocking them open or off. If they are knocked off, loss of fluid from hydraulic system No. 1 will probably result from broken lines. Other than the additional drag caused by the broken parts, the airplane should remain structurally sound for continued flight.

Jettison of Cargo From Aerial Delivery Configuration.

In the aerial delivery configuration, the airplane is equipped with the aerial delivery system (ADS) kit. This kit provides the centerline restraint rail and roller conveyor systems, the ADS links, and the extraction parachute system.

Prior to jettison, the pilot must establish an airspeed of 150 KCAS or $1.3V_S$, whichever is greater, and a flap setting of 62.5 percent.

All cargo is rigged for airdrop on aerial delivery platforms and is restrained in the centerline ADS rails. The cargo may be rigged for individual airdrop or for sequential airdrop of several platforms. Jettison should be accomplished using normal air drop procedures, when possible. Individual platforms may be jettisoned using normal airdrop procedures or may be jettisoned without the use of an extraction parachute. Sequentially rigged platforms may be jettisoned only through the use of normal air drop procedures. If conditions are such that normal airdrop procedures cannot be used for a sequentially rigged load, the rigging must be broken down so that the platforms may be jettisoned individually. Wheeled and tracked vehicles may be jettisoned only when on ADS platforms and restrained in the ADS rails.

MODEL: C-5A
TF39-GE-1 ENGINES

DATE: OCTOBER 1970

DATA BASIS: ***CATEGORY I/II FLIGHT TEST***

FLAP POSITION FOR JETTISON OF CARGO

LOGISTICS CONFIGURATION

NOTE

1. Gear up.
2. 2° deck angle (level flight).

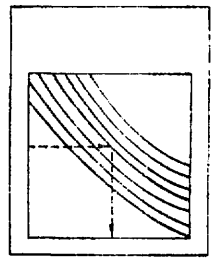

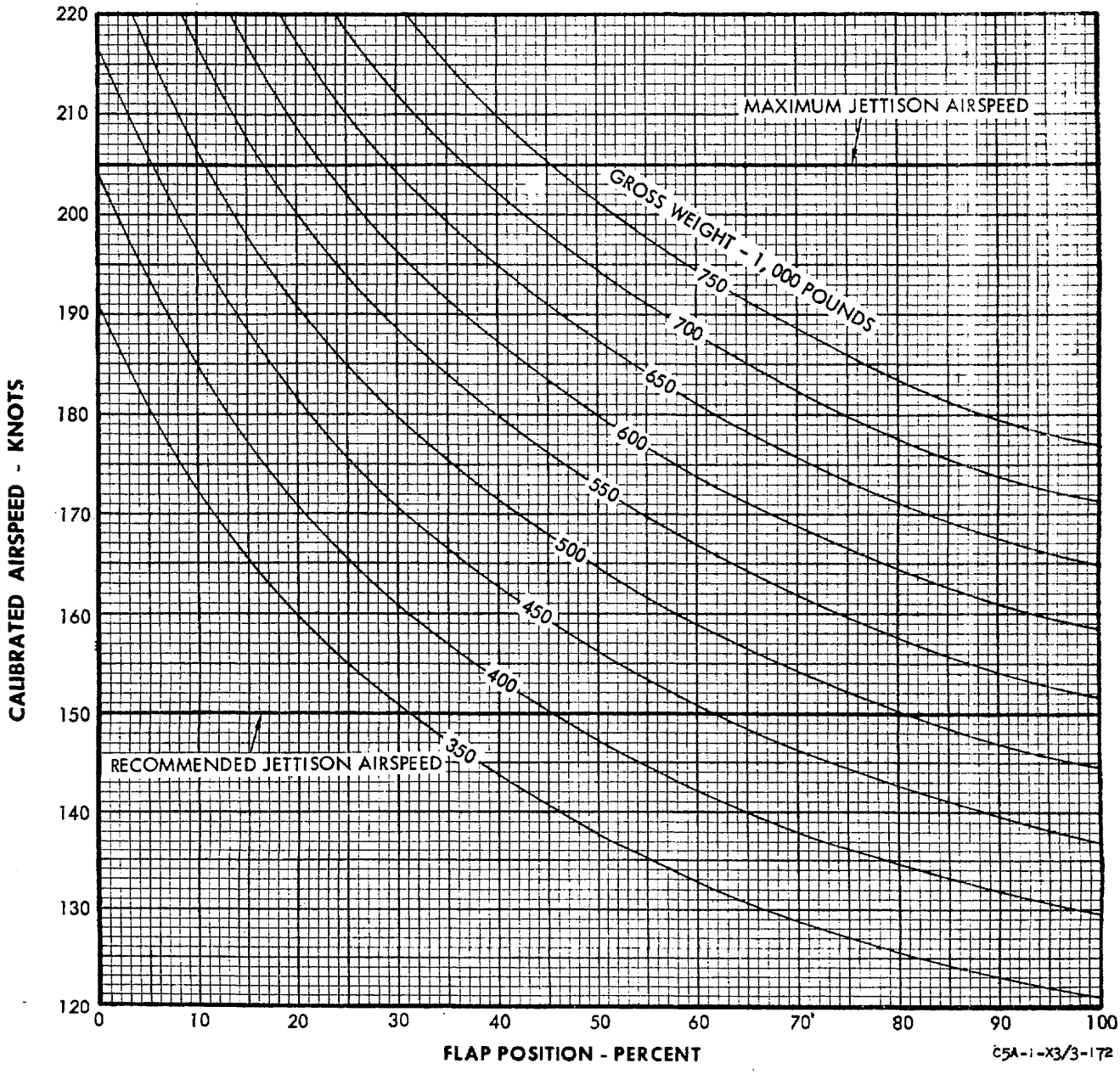

Figure 3-8.

Jettison of Cargo From Logistic Configuration.

WARNING

Movement of the cargo pallets inflight must be controlled when manually positioning for jettison.

Prior to jettison, the pilot must establish an airspeed and flap setting for the gross weight from figure 3-8, to establish a 2 degree deck angle. Recommended airspeed for jettison is 150 KCAS; however, any airspeed flap position combination may be used, provided limitations are not exceeded.

In the logistic configuration, palletized cargo or cargo rigged on ADS platforms is restrained in the logistic rail system. The aft side cargo doors are not designed to be opened in flight, therefore, all cargo restrained in the logistic rail system must be shifted to the center line of the airplane prior to jettison over the aft ramp through the aft center cargo door opening.

Pallets may be shifted from the side logistic rail location to the center line of the airplane by using the omnidirectional roller conveyors at the aft end of the aft ramp.

WARNING

Loaded pallets on the aft ramp must be jettisoned first using small article jettison technique. Platforms cannot be jettisoned from the logistic rails. Spanning loads on pallets cannot be jettisoned from the logistic rails.

No technique for jettison of nonpalletized bulk cargo or wheeled and tracked vehicles has been established. Bulk cargo, if possible, should be jettisoned using small article jettison technique.

WARNING

Any attempt to jettison nonpalletized wheeled/tracked vehicles or large sized bulk cargo is considered extremely hazardous with the probability of major structural damage.

Small Article Jettison.

Jettison of small articles can be safely accomplished through the troop doors with the aft cargo doors closed. The troop doors can be safely opened and closed at a maximum of 205 KCAS, with the aft cargo doors closed.

General Procedures.

Pilot and engineer.

The Pilot Shall:	The Engineer Shall:
a. Descent to a maximum altitude of 20,000 feet.	
b. Direct crew and troops to use oxygen as required	Upon direction of pilot:
	a. Don oxygen mask and use oxygen.
Personnel involved in jettisoning will use portable oxygen bottles above 10,000 feet.	
c. Direct flight engineer to depressurize airplane.	Upon direction of pilot:

Pilot and engineer.

The Pilot Shall:

d. Slow the airplane to the speed and extend the flaps as determined from figure 3-8 to establish a 2 degree deck angle. Do not slow to a speed less than $1.3V_S$.

e. Place the aft cargo doors arming switch to ADS READY.

f. Direct loadmaster, and other crew members as required, to open the cargo doors and ramp and commence jettisoning.

g. Upon completion of jettisoning, direct loadmaster to close all doors.

h. Direct flight engineer to pressurize airplane.

The Engineer Shall:

b. Depressurize airplane.

WARNING

Depressurize the airplane before arming the ADS and opening the pressure door. Procedures outlined for pressurization control for ADS operations shall be used for depressurizing the airplane.

Upon direction of pilot:

c. Pressurize airplane.

Jettison of Cargo from Aerial Delivery Configuration.

The Loadmaster Shall:

a. Upon direction of pilot, don portable oxygen bottle, personnel safety harness, and verify ADS links installed on aft ramp.

b. Upon direction of pilot, retract pressure door seals, open pressure door, ramp, and center cargo door using normal ADS door opening procedures.

c. Using normal airdrop procedures, airdrop the aft most platform(s).

d. Using normal airdrop procedures, continue to airdrop as much of the remaining cargo as directed.

Note

If normal airdrop procedure cannot be used, jettison of platforms must be accomplished, one platform at a time, controlling the release of platforms from the forward left hand master control handle on the ADS rail.

If jettisoning cannot be accomplished using normal air drop procedures, accomplish the following:

a. Rig for individual platform jettison.

1. Detach the extraction line and parachute from the aft end of each platform and secure them on the proper platform.

2. Remove all restraint from the right side of the affected platform by operation of the right-hand control handle(s) (4) on the ADS rails.

3. Reposition the sequence devices in the left-hand restraint mechanisms as follows:

All mechanisms engaged in aft most platform.	Position No. 1
All mechanisms engaged in second platform from the rear.	Position No. 2
All mechanisms engaged in third platform from the rear.	Position No. 3
All other mechanisms	Position No. 4

b. Manually release the detents from the aft most platform (position No. 1) using the forward, left-hand master control handle and jettison the platform.

c. Manually release and jettison the second platform (position 2) after the first platform has cleared the airplane.

d. Manually release and jettison the third platform (position 3) after the second platform has cleared the airplane.

e. Return the forward, left-hand master control to the "secured" position for all sequence positions.

f. Reposition the sequence devices in the left-hand restraint mechanisms as described in step a.3 above starting with the aft most platform still in the airplane.

g. Repeat steps b, c, and d to jettison the next three platforms.

h. Steps a.3 and b through f may be repeated as many times as necessary to jettison any desired amount of cargo up to the entire load.

i. Using normal airdrop procedures, close the aft ramp and center cargo door.

j. Using normal airdrop procedures, close the pressure door and pressure door seals.

Jettison of Cargo From Logistic Configuration.

a. Upon direction of pilot, don portable oxygen bottle and personnel safety harness.

b. Airplane - depressurized

Confirm full open position of outflow valves.

Note

If electrical power is not available, use the Jettison - Emergency Door Opening procedure to open the aft doors and ramp.

c. Upon direction of pilot, manually retract pressure door seals and open pressure door using normal ADS preparation procedures.

d. On 70168 and 00452 and up and airplanes modified by T.O. 1262, open the covers on both aft loading control hydraulic manifolds.

e. Disconnect the electrical connector from F valve on the loading control hydraulic manifold.

f. Open the center door from the forward ADS panel using normal ADS procedures.

g. Lower the ramp to the coplanar position. Depress F valve. When ramp reaches coplanar, release F valve.

h. Install the safety guard on F valve.

i. Remove restraint nets or devices from cargo on the ramp pallets, notify pilot and jettison cargo out through the aft center door opening using the small article jettison technique.

j. Raise movable lip and retract detent on the left hand outboard restraint rail.

k. Open movable detent on inboard restraint rail.

l. Stow the empty pallet out of the way or secure it to the pallet load to be jettisoned.

m. Stow the inboard restraint guide rails flush in the cargo floor.

n. Repeat steps j through m with the right-hand ramp pallet.

o. Attach one end of tiedown strap(s) to tiedown ring on cargo floor centerline.

p. Secure other end of strap(s) to centerline of the forward end of first pallet to be jettisoned.

q. Remove the lock detent from the pallet.

r. Install pallet stop(s), on the left or right side of the ramp, approximately 20 inches from the edge of the ramp. Pallet stop(s) should be installed on the side of the ramp opposite the pallet being jettisoned.

s. Unlock the restraint rail holding the pallet to be jettisoned and move the pallet onto the ramp. Move pallet to centerline of ramp on the omni-directional rollers.

t. If two straps were used to restrain the pallet during these actions, remove one of the straps at this time.

Note

Maintain an airplane attitude such that there will be continuous tension on the strap. Pallet must be kept clear of solid rollers on the fore and aft sections of the omni-directional channels to permit lateral movement of the pallet.

u. Notify pilot when ready to jettison pallets.

v. Pilot will adjust airplane attitude to a minimum of 5 degrees nose up.

w. Upon command of pilot, cut strap at the pallet and continue jettisoning.

CAUTION

Due to tension load on the straps, personnel jettisoning platform and cutting strap must position themselves to be clear of the rebounding strap.

x. Notify pilot when last pallet has cleared the airplane.

WARNING

The C.G. of the airplane must be within acceptable limits before and after the jettisoning of each load. If necessary, and if possible, shift the pallets/platforms within the rail system during jettison operations to keep the C.G. of the airplane within acceptable limits.

y. Close the ramp and center door from the forward ADS panel using normal ADS procedures.

z. Reconnect electrical connector for F valve on the loading control hydraulic manifold.

aa. Using normal ADS procedures, close the pressure door and pressure door seals.

ab. On 70168 and 00452 and up and airplanes modified by T.O. 1262, close the covers on both aft loading control hydraulic manifolds.

ac. Place the Aft Cargo Doors Arming switch to "SAFE".

Small Article Jettison From Troop Doors.

a. Upon direction of the pilot, don protective clothing, oxygen bottle (as required) and personnel safety harness.

b. Position cargo to be jettisoned near the troop doors. There is no minimum or maximum weight limit for cargo to be jettisoned through the troop doors.

c. Make a visual check of the outflow valve to ensure that it is in the full open position.

Note

Troop doors cannot be opened when airplane is pressurized.

d. Adjust safety harness and ensure that the harness restraint strap is properly anchored and secured to a tiedown ring on the cargo floor or to a tiedown ring on a logistic pallet.

WARNING

When both troop doors are to be opened, the restraint strap of the safety harness shall be adjusted to a maximum length of the safe distance to the nearest open door.

e. Upon direction of the pilot, open troop doors. Either or both troop doors can be opened at airspeeds up to 205 KCAS with or without auxiliary ventilation.

WARNING

Do not release the door until it is locked in the up position. Injury may result if the door falls free.

f. Upon command of pilot, jettison cargo. The loadmaster can approach within two feet of the open troop door without difficulty.

CAUTION

Do not attempt to jettison any cargo that could jam in the troop doors.

To prevent contents from a leaky container from blowing into the faces of personnel jettisoning cargo, personnel should be forward of the troop door.

g. Notify pilot that jettison is complete.

h. Close troop doors.

Small Article Jettison From Center Cargo Door.

This procedure is used when a limited number of small items are to be jettisoned.

a. Upon direction of pilot, don portable oxygen bottle and personnel safety harness.

b. Airplane - depressurized.

Confirm full open position of outflow valves.

c. Upon direction of pilot, retract pressure door seals and open pressure door using normal ADS preparation procedures.

d. On 70168 and 00452 and up and airplanes modified by T.O. 1262, open the cover on the aft loading control hydraulic manifold.

e. Disconnect the electrical connectors from F and G valves on the loading control hydraulic manifold.

f. Open the center door. Depress and hold D valve until the center door is open.

g. Jettison small articles, as desired, over the ramp through the center cargo door opening.

h. Notify pilot when jettison is complete.

i. Close the center door. Depress and hold E valve until the center door is closed.

j. Reconnect electrical connectors for F and G valves on the loading control hydraulic manifold.

k. On 70168 and 00452 and up and airplanes modified by T.O. 1262, close the cover on the aft loading control hydraulic manifold.

l. Using normal ADS procedures, close the pressure door and pressure door seals.

m. Place the Aft Cargo Doors Arming switch to "SAFE".

THRUST REVERSER FAILURE.

Thrust Reverser Pressure On or Not-Locked Light Indication in Flight.

If a thrust reverser not-locked light comes on during flight and the pressure on light remains off, the malfunction is probably a faulty limit switch.

If a thrust reverser not-locked light comes on accompanied by a thrust reverser pressure on light, only one of the four independent actuator locks or lock switches is probably unlocked or indicating an unlocked condition. The system will automatically port flow to the retract side of the actuators to assure the reverser remains in the stowed position.

If a thrust reverser press on light comes on and the not-locked light is not on, normal operation of the thrust reverser will probably not be affected. The cause of this condition can be either a failure of the pressure switch or the shut-off valve, which would allow the retract sides of the actuators to become pressurized. In all cases, ensure maintenance action after landing.

In Flight Thrust Reverser Emergency Retraction.

If an inboard thrust reverser cannot be retracted by moving the throttle from REV IDLE to IDLE, place the applicable Reverse Thrust Emergency Retract switch to the RETRACT position and hold it there until the reverser has stowed. Monitor the hydraulic system quantity indicator during emergency retraction for loss of fluid. Retraction should occur within 15 seconds. If retraction does not occur or loss of fluid is indicated, return the switch to the OFF position and accomplish a precautionary engine shutdown. When retraction has occurred, release the switch. Leave the switch in the OFF position until maintenance is accomplished.

WARNING

Never forcibly override the mechanical lockout when moving an inboard throttle lever from REV IDLE to the forward thrust range if the thrust reverser has not stowed (not-locked light on). To do so will cause excessive reverse thrust to be applied while the thrust reverser is extended.

CAUTION

On 90015 and up and airplanes modified by T.O. 927 but not modified by T.O. 1232, do not operate the thrust reversers by the normal or emergency method with the fire handle pulled. Rupture of the return line between the thrust reverser actuator control valve and the emergency shutoff valve may result. On 00453 and up and airplanes modified by T.O. 1232, the thrust reversers will not operate with the fire handle pulled.

LANDING EMERGENCIES.

NO FLAP LANDINGS.

WARNING

Bank angles should be limited to about 15 degrees when the airplane is below 200 feet and should not exceed 5 degrees when at or below 50 feet. Pitch angles should be limited to about 10° when the airplane is below 200 feet. See figure 5-10 for attitude limitations during approach and landing.

No flap landings will be flown similarly to a normal landing except as follows:

a. The downwind and base legs should be extended to 150 percent of a normal flaps-down traffic pattern.

b. It will be necessary to plan for a shallow approach, especially at heavier gross weights.

c. Approaching the threshold, power should be reduced earlier than normal, because, due to the low drag configuration, deceleration will be much slower. Do not perform a flare which results in a hold-off type landing, but allow the airplane to fly onto the runway. Ground effect will reduce the sink rate and cause the nose to pitch down. Any increase in nose-up attitude will cause the airplane to float and may result in aft fuselage contact with the runway. Also, higher decelerations are possible on the ground than in the air. Therefore, the shortest landing distance will result from flying the airplane onto the runway as soon as possible after threshold passage.

d. When the main landing gear contacts the runway, begin to lower the nose wheel to the runway immediately.

e. Use normal spoiler deployment and reverse thrust techniques.

f. Normal crosswind techniques described in Section II apply during no flap landings.

g. Leave the Spoiler Ratio Shifter Switches in AUTO.

NO SLAT LANDINGS.

Landings with flaps extended and slats retracted should be flown the same as a normal landing except that approach speed, and touchdown speed should be as indicated in Part 9 of T.O. 1C-5A-1-1.

Refer to Section V for speed and operational limits for this configuration.

LANDING WITH ONE OR MORE ENGINES INOPERATIVE.

One Engine Inoperative.

If an outboard engine is inoperative but the associated hydraulic system is intact, turn on the applicable electric hydraulic boost pump and the ATM prior to extending the landing gear and flaps.

Note

Prior to turning on one or both ATMs, the floor heat system should be turned off. It may be necessary to further reduce bleed air loads to prevent the ATMs from cycling on and off.

Rudder trim requirements and reversing techniques are the only basic differences from a four-engine approach and landing. The pilot should not exceed REV IDLE except with symmetrical power.

Two Engines Inoperative.

If the inoperative outboard engine hydraulic system is intact, turn on the applicable electric hydraulic boost pump and then the ATM prior to extending the landing gear and flaps. See figure 3-9 for two-engine inoperative landing pattern.

Note

Prior to turning on one or both ATMs, the floor heat system should be turned off. It may be necessary to further reduce bleed air loads to prevent the ATMs from cycling on and off.

If engines 1 and 4 are inoperative but the associated hydraulic systems are intact, turn on both hydraulic boost pumps and then both ATMs prior to extending the landing gear and flaps. This will ensure a normal flap and landing gear extension time. With power transfer units only supplying hydraulic power, landing gear and flap extension time will be approximately double the normal time.

With engines 2 and 3 inoperative, hydraulic systems 2 and 3 can be pressurized by hydraulic systems 1 and 4, respectively, through the power transfer units. In this configuration, extension time for flaps and slats and landing gear will not be affected. During operation of the landing gear system or flaps and slats system, sufficient pressure will be available in all systems for normal flight control operation.

After touchdown and when the nose gear is on the ground, retard all throttles to REV IDLE. Spoilers and brakes will be the primary means of stopping the airplane. Symmetric reverse thrust only may be used.

GO-AROUND WITH ONE OR MORE ENGINES INOPERATIVE.

Three-Engine Go-Around.

The decision to go around with one engine inoperative must be made as early as possible due to the reduced thrust available. The normal go-around procedure shall be followed.

Two-Engine Go-Around.

Always plan a two-engine approach so that a go-around will not be required.

LANDING WITH ONE OR MORE MAIN GEAR RETRACTED.

See figure 3-10 for emergency landing configuration for main gear extension failure.

LANDING WITH NOSE GEAR RETRACTED.

See figure 3-10 for emergency landing configuration for combined nose gear and main gear extension failures. Refer to Wheels-Up Landing Procedures in this section.

If the nose landing gear cannot be extended, a landing on the main landing gears can be made and the nose lowered onto the runway as speed decreases. Smooth nose contact with the runway is of primary importance. The horizontal stabilizer should be used for more effective pitch control at the slower speeds. Added nose-up pitch trim may be applied during the final landing phase before initial touchdown.

The deployment of spoilers after touchdown produces nose-down pitch because the airplane rotates around the aft main gear. Therefore, to assist in holding the nose off the runway, the deployment of spoilers after touchdown is not recommended. The landing roll, without the use of spoilers, will be increased. Brakes also cause nose-down pitch and should be used only after the nose has contacted the runway and only as required to stop the airplane from leaving the runway.

Excess fuel should be jettisoned to decrease the landing gross weight and permit lower touchdown speed. If possible, cargo should be shifted aft for a more favorable aft CG configuration.

If time permits, the part of the runway where nose touchdown is planned should be foamed (16 feet wide beginning 3,000 feet from approach end and 4,000 feet long). Directional control on the unfoamed portion of the runway may be maintained with brakes. Brake effectiveness may diminish on the foamed runway surface and asymmetric reverse thrust may be used for added directional control.

The following procedure is recommended for landing with the nose gear retracted:

Complete Before Landing and Wheels-Up Landing checklists.

Perform a normal approach for landing. Ensure that the landing gear lever is DOWN.

At touchdown, the pilot should begin actuating nose-up trim to assist in holding the nose off.

After touchdown, the pilot should:

a. Not normally use spoilers due to the nose down pitching moment.

b. Hold the nose off. Use reverse thrust if possible for deceleration.

c. Hold the nose off as long as possible, then begin a transition to smooth nose contact.

d. Upon nose contact, move all four throttles to REV IDLE.

e. Use braking to maintain directional control. If braking becomes ineffective, asymmetric reverse thrust may be used for directional control.

LANDING WITH FLAT TIRE.

Two or More Nose Gear Tires Flat.

If practical, move the CG as near the aft limit as possible. Make a normal approach and touchdown. After touchdown, hold the nose gear off the runway as long as possible while maintaining elevator control then lower it smoothly to the runway. Use reverse thrust and minimum brakes to stop the airplane.

One or More Tires On One Main Gear Flat.

Make a normal approach, and align the airplane on the side of the runway with the good tires. This will provide the width of the runway for the airplane to veer as it turns into the flat tires.

LANDING PATTERN - TWO ENGINES INOPERATIVE

NOTE

The bank angle should not normally exceed 30 degrees in a turn.

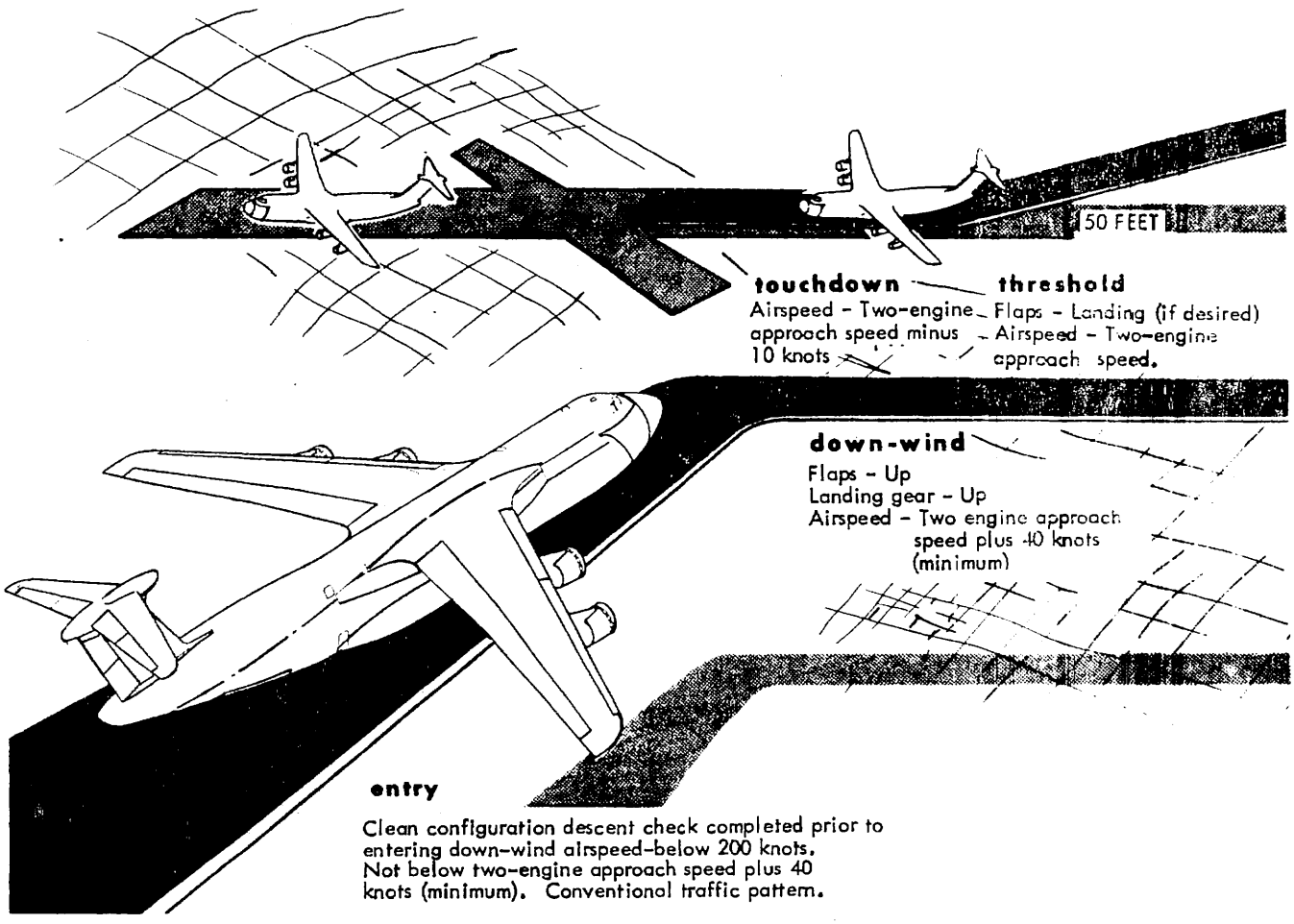

C5A- -6-168-1

Figure 3-9. (Sheet 1 of 2)

NOTE

1. Emergency extension of the landing gear requires approximately 3 minutes.
2. The term "Landing Assured" shall be interpreted as follows: On final approach with runway or approach lights in sight, within one mile of runway and in a position to complete the landing safely.
3. The two-engine approach speed is charted 40% flap approach speed.
4. Set airspeed command markers to two-engine approach speed.
5. Do not slow below two-engine approach speed plus 40 knots until turn to final approach is completed and flaps are lowered to 40 percent.

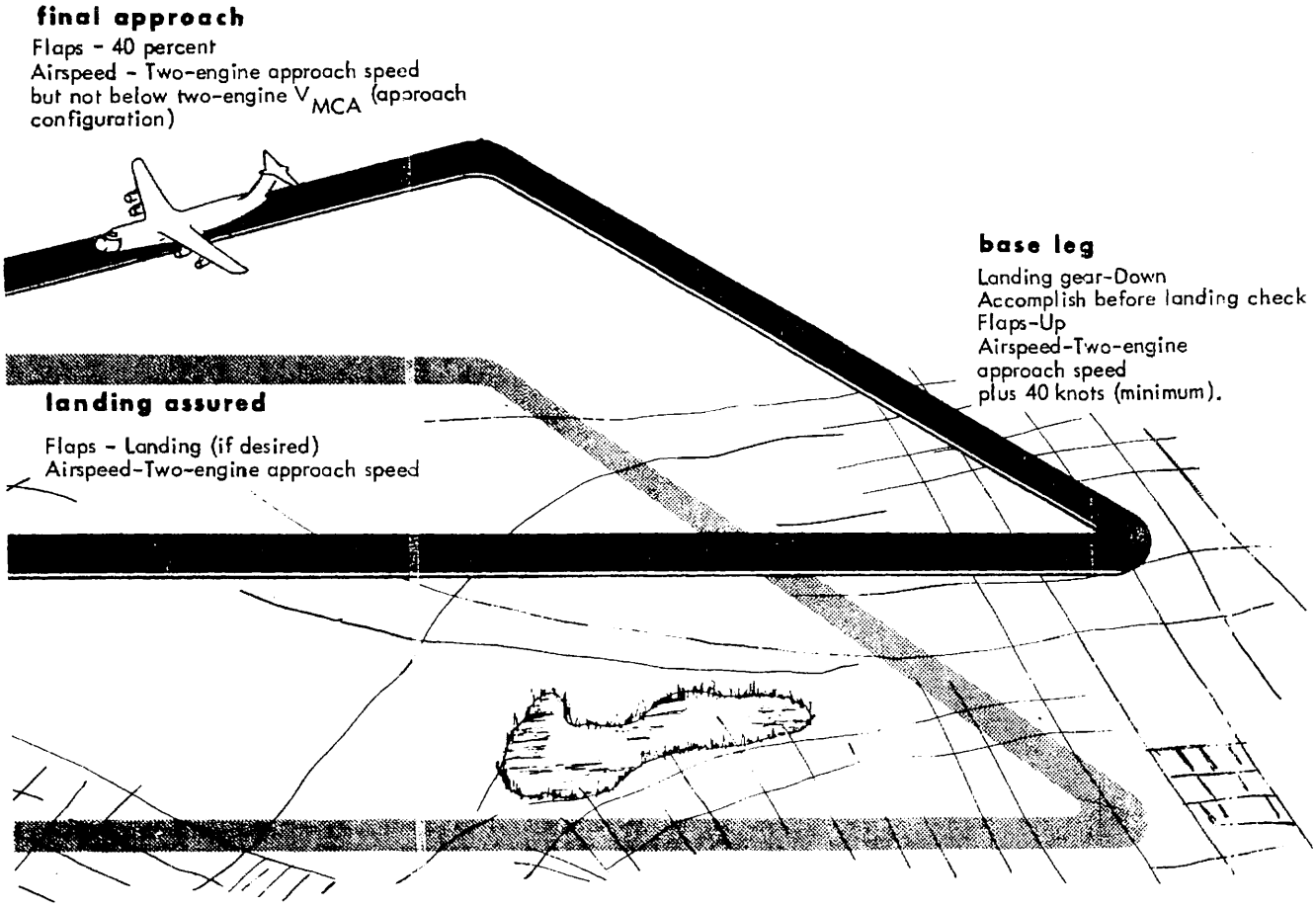

C5A-1-X4/0-168-2

Figure 3-9. (Sheet 2 of 2)

LANDING PROCEDURES FOR GEAR EXTENSION FAILURES

INITIAL CONDITION OF NOSE GEAR (1)	INITIAL CONDITION OF MAIN GEARS				MAXIMUM RECOMMENDED GROSS WEIGHT (POUNDS) (2)	RECOMMENDED PROCEDURE (3) (4) (5) (6) (7) (8)
	FORWARD		REAR			
	LEFT	RIGHT	LEFT	RIGHT		
E	E	E	E	R/K	550,000	MINIMUM BRAKING ALLOWED.
E	E	E	R/K	E	550,000	MINIMUM BRAKING ALLOWED.
E	E	E	R/K	R/K	MINIMUM	MOVE THE C.G. AS NEAR THE FORWARD LIMIT AS POSSIBLE. IF THE C.G. CANNOT BE MOVED FORWARD OF 25% MAC, LOWER THE TAIL TO THE GROUND PRIOR TO LOSING ELEVATOR CONTROL, WHICH OCCURS AT APPROXIMATELY 80 KNOTS.
E	E	R/K	E	E	550,000	RETRACT OTHER FORWARD MAIN GEAR; MINIMUM BRAKING ALLOWED.
E	E	R/K	R/K	E	MINIMUM	MINIMUM BRAKING ALLOWED.
E	R/K	E	E	E	550,000	RETRACT OTHER FORWARD MAIN GEAR; MINIMUM BRAKING ALLOWED.
E	R/K	E	E	R/K	MINIMUM	MINIMUM BRAKING ALLOWED.
E	R/K	R/K	E	E	550,000	MINIMUM BRAKING ALLOWED.
E	R/K	R/K	R/K	R/K	MINIMUM	IF KNELT, USE MINIMUM BRAKING.
R	E	E	E	E	MINIMUM	MOVE THE C.G. AS NEAR THE AFT LIMIT AS POSSIBLE.
R	E	E	E	R/K	MINIMUM	MOVE THE C.G. AS NEAR THE AFT LIMIT AND LEFT SIDE AS POSSIBLE.
R	E	E	R/K	E	MINIMUM	MOVE THE C.G. AS NEAR THE AFT LIMIT AND RIGHT SIDE AS POSSIBLE.
R	E	R/K	E	E	MINIMUM	MOVE THE C.G. AS NEAR THE AFT LIMIT AND LEFT SIDE AS POSSIBLE.
R	R/K	E	E	E	MINIMUM	MOVE THE C.G. AS NEAR THE AFT LIMIT AND RIGHT SIDE AS POSSIBLE.
R	R/K	R/K	E	E	550,000	MOVE THE C.G. AS NEAR THE AFT LIMIT AS POSSIBLE. LOWER THE NOSE PRIOR TO LOSING ELEVATOR CONTROL, WHICH OCCURS AT APPROXIMATELY 80 KNOTS.
R	E	E	R/K	R/K	550,000	MOVE THE C.G. AS NEAR THE FORWARD LIMIT AS POSSIBLE. IF THE C.G. CANNOT BE MOVED FORWARD OF 25% MAC, LOWER THE TAIL TO THE GROUND PRIOR TO LOSING ELEVATOR CONTROL, WHICH OCCURS AT APPROXIMATELY 80 KNOTS.

C5A-1-X3/4-504-1

Figure 3-10. (Sheet 1 of 2)

NOTE

1. THE NOSE GEAR EXTENDED WILL ALLOW NOSE WHEEL STEERING TO AID GROUND CONTROL.

2. MINIMUM GROSS WEIGHT IS THAT WEIGHT AFTER (1) JETTISONING FUEL TO THE MINIMUM FUEL REQUIRED FOR APPROACH AND LANDING, AND (2) JETTISONING CARGO UNLESS REQUIRED FOR C.G. CONTROL.

3. DO NOT USE BRAKES UNLESS INDICATED.

4. WHEN A FORWARD MAIN GEAR AND AFT MAIN GEAR ON THE SAME SIDE ARE RETRACTED OR KNELT, RETRACT OR KNEEL THE REMAINING MAIN GEAR(S). WHEN ANY THREE MAIN GEARS ARE RETRACTED OR KNELT, RETRACT OR KNEEL THE REMAINING MAIN GEAR.

5. IF THE NOSE GEAR IS RETRACTED AND ANY TWO DIAGONAL MAIN GEAR ARE RETRACTED, RETRACT THE REMAINING MAIN GEAR. IF ANY TWO DIAGONAL MAIN GEAR ARE KNELT, KNEEL THE REMAINING MAIN GEAR.

6. FOAM THE RUNWAY WHEN ALL MAIN GEARS ARE RETRACTED OR THE NOSE GEAR IS RETRACTED. FOAM RUNWAY IF TAIL IS TO BE LOWERED TO THE GROUND (USE SAME FOAM REQUIREMENTS AS FOR NOSE GEAR RETRACTED).

7. IF EITHER OR BOTH AFT MAIN GEAR ARE RETRACTED, SELECT NORMAL BRAKES. IF EITHER OR BOTH FORWARD MAIN GEAR ARE RETRACTED, SELECT ALTERNATE BRAKES. IF ONE FORWARD AND ONE AFT MAIN GEAR ARE RETRACTED, SELECT EMERGENCY BRAKES.

8. WHEN LANDING WITH ALL THE MAIN GEAR KNELT, BRING THE AIRPLANE TO A STOP ON THE RUNWAY. DO NOT ACCOMPLISH ANY TURNS; DO NOT TAXI.

E - GEAR EXTENDED R - GEAR RETRACTED R/K - GEAR RETRACTED OR KNELT

C5A-1-X3/3-504-2

Figure 3-10. (Sheet 2 of 2)

WHEELS-UP LANDING.

If landing with the MLG retracted and if conditions permit, the runway should be foamed 48 feet wide, beginning 1,500 feet from the approach end of the runway and 4,000 feet long. If any part of the fuselage will come in contact with the ground, proceed as follows.

WARNING

The flight engineer's student/instructor and navigator's student/instructor seats will not be occupied during a wheels up landing.

The Pilot Shall:	The Engineer Shall:	The Scanner/Loadmaster Shall:
a. Direct the crew and troops to prepare for crash landing. (P)		a. Acknowledge pilot and begin preparation for crash landing.
b. Brief the crew on procedures to be followed prior to and during the crash landing. (P)		b. Brief troops and explain that buffeting and excessive noise can be expected when the escape hatches and doors are opened.
c. Descend to an altitude not requiring oxygen (if applicable). (P)		
d. Depressurize the airplane if required. (Direct the engineer.) (P, E)	a. Depressurize airplane on pilot's command.	
e. Cargo jettison as required. (Direct the scanner/loadmaster.) (P, S)		c. Jettison cargo as directed by the pilot.
f. Pilot will direct all loose equipment be stowed/secured (LM, S)	b. Jettison fuel on pilot's command.	d. Upon direction of pilot, stow/secure all loose equipment.
g. When appropriate, jettison fuel to minimum required for approach and landing (approx. 20,000 lbs). (P, E)	c. Close fuel isolation, and separation valves.	
PRIOR TO APPROACH.		
(Approx. 10 minutes)		
a. Six short blasts on horn	a. Air Conditioning - OFF	
b. Direct scanner/loadmaster to open emergency escape hatches, service doors and troop doors.	b. Recirc Fans - OFF c. Floor Heat/Fans - OFF	a. Upon pilot's command open all emergency escape hatches, service doors, and troop doors. b. Close manual oxygen shut-off valve.

Note

Gear up approach and landing should be accomplished utilizing normal speeds and configuration. Doors and hatches should be removed/opened prior to landing.

The Pilot Shall:	The Engineer Shall:	The Scanner/Loadmaster Shall:
c. Direct all personnel to assume crash positions and lock harnesses. (P)		c. Ensure all personnel are in crash landing position.

PRIOR TO LANDING (FSS INSTALLED).

On airplanes modified by T.O. 1387.

(Approx. 4 minutes)

a. FSS - ARMED

b. Zone Alarm Pushbutton - DEPRESSED

Discharge the agent into required zones as outlined below:

Note

Depress each pushbutton in the sequence shown for each landing gear configuration. Wait until the flow light has gone off before depressing the next pushbutton in the sequence.

(1) All Landing Gear Retracted. Beginning approximately 4 minutes before touchdown depress the nitrogen fire suppression system buttons in the following sequence:

RIGHT MAIN WHEEL WELL

LEFT MAIN WHEEL WELL

UNDERFLOOR AFT

RIGHT PTU

LEFT PTU

NOSE WHEEL WELL

UNDERFLOOR FWD

UNDERFLOOR MID

The Pilot Shall:

The Engineer Shall:

(2) Nose Gear Extended. All MLG Retracted; Nose Gear and Fwd MLG's Extended and Aft MLG's Retracted; Nose Gear and Aft MLG's Retracted and Fwd MLG's Extended. Beginning approximately 2 minutes before touchdown, depress the nitrogen fire suppression system buttons in the following sequence:

UNDERFLOOR AFT

RIGHT PTU

LEFT PTU

(3) Nose Gear Retracted, All MLG's Extended; Nose Gear Retracted and any one MLG Retracted; Nose Gear and Fwd MLG's Retracted and Aft MLG's Extended.

Beginning approximately 2 minutes before touchdown, depress the nitrogen fire suppression system buttons in the following sequence:

NOSE WHEEL WELL

UNDERFLOOR FWD

The Scanner/Loadmaster Shall:

a. Sound one long blast on warning horn prior to touchdown. (CP)

The Pilot Shall:	The Engineer Shall:	The Scanner/Loadmaster Shall:
PRIOR TO LANDING (FSS NOT INSTALLED).		
On airplanes not modified by T.O. 1387.		
a. Sound one long blast on warning horn prior to touchdown. (CP)		
AFTER LANDING.		
a. Fire handles - pulled (CP).		

After touchdown, the pilot shall direct copilot to pull No. 1 and No. 4 fire handles. Do not pull any fire handle with the nose gear retracted until the airplane comes to a full stop. The pilot shall maintain directional control and wings level with ailerons, rudder, and nose gear steering (if available). After giving the evacuation order and receiving acknowledgement, the copilot shall pull No. 2 and No. 3 fire handles and the engineer shall turn off the battery.

Note

If the fire warning light should come on during the landing, pull the fire handle and discharge the fire extinguisher immediately to that engine.

b. Evacuate airplane.	a. Evacuate airplane.	a. Direct evacuation. Evacuate airplane. On the pilot's command, the loadmaster(s) shall deploy the escape slides and evacuate the troops. The scanner shall deploy the escape slide and evacuate the relief crew area and the courier area.

LANDING GEAR FAILURE.

See figure 3-11 for landing gear manual controls.

Landing Gear Inflight Troubleshooting procedures are provided in Section I and may be used when operational conditions permit. If these procedures are used and the malfunction is not corrected, record the light indications on Form 781 and accomplish the appropriate emergency procedures in this section.

Use the nose landing gear emergency extension system only when the normal extension system will not extend the nose landing gear or for functional check flights. Do not use the nose landing gear emergency extension system for practice extensions.

Emergency MLG Extension-Normal Hydraulic Pressure Available.

a. Slow to approach speed for the associated gross weight and flaps available (62.5 percent flaps desired and maximum).

b. Assure that the Landing Gear lever is DOWN.

If the MLG does not move to the down and locked (green wheels) position, proceed to the next step.

Note

If operating with emergency generator power only, proceed to step g.

c. Extend the MLG by placing the Emergency Extend switch to the EXTEND position.

CAUTION

If the position indicator does not move to the intermediate position in 5 seconds, immediately return the switch to the NORMAL position.

d. Check the MLG for the down and locked (green wheels) position.

e. Place the Emergency Extend switch to the NORMAL position.

WARNING

Normal brakes, alternate brakes and crosswind and caster will not be available if the Emergency Extend switches are left in the EXTEND position.

f. If the MLG extends to green wheels, accomplish the Brake System Check (Inflight) in this section.

If the MLG does not indicate down and side brace locked (red wheels), leave the Emergency Extend switch in the NORMAL position and proceed to the next step.

g. Open the affected MLG Control circuit breaker(s).

h. Depressurize the airplane and remove the MLG inspection cover.

i. On 00454 and up and airplanes modified by T.O. 1271, depress and hold the LG Door Uplock Unlock button, the Rotate (Gear Up) button and the Gear Down button, in this order, until the MLG is down and the side brace is locked (red wheels). Release the buttons. On 68304, 68307, 70167, 70168 and 70170 through 00453 not modified by T.O. 1271, depress and hold the Rotate (Gear Up) button and the Gear Down button, in this order, until the MLG is down and the side brace is locked (red wheels). Release the buttons.

CAUTION

If the Rotate (Gear Down) button is inadvertently depressed while accomplishing the above step, damage to the airplane will result.

Note

If the MLG position indicator is inoperative, check the red alignment marks on the side brace for a gear down indication.

j. Depress the MLG Rotate (Gear Down) button until the MLG indicates the zero degree position (green wheels).

k. If the MLG extends to green wheels, accomplish the Brake System Check (Inflight) in this section.

If the MLG does not rotate to the zero-degree position, proceed with the Emergency Bogie Rotation procedure that follows.

Emergency Bogie Rotation.

If the MLG extends to the down and side brace locked (red wheels) position but does not rotate, accomplish the following:

a. Slow to approach speed for the associated gross weight and flaps available (62.5 percent flaps desired and maximum).

b. Place the Emergency Extend switch to the EXTEND position. Check the MLG for down and locked indication (green wheels). If the gear rotates properly, return the Emergency Extend switch to the NORMAL position and accomplish the Brake System Check inflight) in this section. Look through the inflight inspection window for the affected MLG and check that the black stripes are aligned vertically (to form one line) across the MLG rotating collar, locking collar and the crosswind positioning collar. If aligned, the MLG has rotated properly and the Emergency Extend switch can be returned to the NORMAL position. Accomplish the Brake System Check (Inflight) in this section.

If it does not rotate, leave the Emergency Extend switch in the EXTEND position and proceed as follows:

WARNING

Normal brakes, alternate brakes and crosswind and caster will not be available if the Emergency Extend switches are left in the EXTEND position.

c. Rotate the MLG to the zero degree position by placing the affected MLG Position and Emergency Control switches on the copilot's side console to the LEFT or RIGHT position. Check the affected MLG for down and locked and indication (green wheels).

d. Place the Emergency Extend switch to the NORMAL position and accomplish the Brake System Check (Inflight) in this section.

If the MLG does not rotate, proceed to the next step.

e. Open the affected MLG Control circuit breaker.

f. Depress the MLG Rotate (Gear Down) button. If the gear rotates, accomplish the Brake System Check (Inflight) in this section. If the MLG does not rotate, proceed to the next step.

g. Place the Emergency Extend switch to the EXTEND position.

h. Simultaneously depress the MLG Door Emergency Unlock button and the Emerg Outbd Positioning button until the MLG indicates down and locked (green wheels).

i. Return the Emergency Extend switch to the NORMAL position.

j. Accomplish the Brake System Check (Inflight) in this section.

If the MLG fails to rotate, proceed with the Emergency In-flight Kneeling Procedures and accomplish the Brake System Check (Inflight) in this section.

Emergency MLG Extension-Normal Hydraulic Pressure Not Available.

a. Slow to approach speed for the associated gross weight and flaps available (62.5 percent flaps desired and maximum).

b. Place the Landing Gear lever DOWN.

With the loss of hydraulic systems No. 1 and 4 ensure that the APU accumulator is charged to 3000 PSI prior to emergency extension of the gear. As soon as the emergency MLG door locks are unlocked, continue to hand pump until the MLG indicates the zero degree position.

c. Place the affected MLG Emergency Extend switch(es) to the EXTEND position.

CAUTION

If the position indicator does not move to the intermediate position in 5 seconds, immediately return the switch to the NORMAL position.

d. Check the MLG position indicator. If green wheels are indicated, proceed to step g.

e. If the MLG fails to unlock, depress the MLG Emergency Door Unlock button and simultaneously place the MLG Emergency Extend switch to the EXTEND position.

f. If the MLG fails to rotate to the green wheels position, simultaneously depress the MLG Door Emergency Unlock button and the Emerg Outbd Positioning button until the MLG indicates down and locked (green wheels).

g. Place the Landing Gear Emergency Extend switch to the normal position.

h. Accomplish Brake System Check (Inflight) in this section.

WARNING

With the loss of No. 1 and 4 hydraulic systems, do not accomplish the Brake System Check (inflight).

WARNING

Normal and/or alternate brakes and normal nose wheel steering will not be available if the Emergency Extend switches are left in the EXTEND position.

Note

If hydraulic fluid in hydraulic system No. 1 is lost, the NLG Steering switch shall be placed to EMER. Crosswind positioning, alternate brakes, castering and rudder pedal steering will not be available.

If hydraulic fluid in hydraulic system No. 4 is lost, the Brake Supply switch shall be placed to ALT and hydraulic System No. 1 quantity gage monitored. If the gage shows decrease in quantity, the Brake Supply switch shall be placed to EMER.

With the loss of hydraulic systems No. 1 and 4, emergency brakes shall be selected.

Emergency NLG Extension-Normal Hydraulic Pressure Available.

If the NLG does not extend, after placing the landing gear lever down, proceed as follows:

CAUTION

After the nose gear has been extended by an emergency procedure the nose wheel steering should be checked for normal operation.

a. Place the Emergency Extend switch to the EXTEND position.

CAUTION

If the position indicator does not move to the intermediate position in 10 seconds, return the switch to the NORMAL position. This is done to prevent burnout of the electrical door or gear extension motor.

CAUTION

Illumination of the emerg sw on light, while in flight with all the Landing Gear Emergency Extend switches in the NORMAL position, indicates a failure of the NLG door (open) control relays. Any attempt to extend the NLG with the Emergency Extend switch could damage the NLG doors. Attempt to extend the NLG by using the Emergency NLG Extension-Emer Sw On Light On procedure in this section.

b. Check the NLG for a down and locked indication.

c. Place the Emergency Extend switch to the NORMAL position.

WARNING

Normal nose wheel steering will not be available if the Emergency Extend switch is left in the EXTEND position.

If the NLG does not indicate down and locked, proceed to the next step.

d. Open the NLG Control circuit breaker.

e. On 00454 and up and airplanes modified by T.O. 1271, depress and hold the LG Door Uplock Unlock button and the NLG Door Open button, in this order, for 10 seconds. Release both buttons. On 68304, 68307, 70167, 70168, and 70170 through 00453 not modified by T.O. 1271, depress and hold the NLG Door Open button for 10 seconds. Release the button.

f. Depress and hold the NLG Downlock Locked button.

g. While holding the NLG Downlock Locked button, depress and hold the NLG Down button for a minimum of 15 seconds, then release both buttons.

h. Check that the NLG is down and locked. The fiber optic scope (figure 3-12) should be used to visually check that the NLG is down and locked.

Emergency NLG Extension-Normal Hydraulic Pressure Not Available.

a. Assure that the Landing Gear lever is DOWN.

b. Place the Emergency Extend switch to the EXTEND position.

CAUTION

Illumination of the emerg sw on light, while in flight with all the landing gear Emergency Extend switches in the NORMAL position, indicates a failure of the NLG door control relays. Any attempt to extend the NLG with the Emergency Extend switch could damage the NLG doors. Attempt to extend the NLG by using the Emergency NLG Extension-Emerg Sw On Light On procedure in this section.

CAUTION

If the NLG position indicator does not move to the intermeciate position in 10 seconds, return the Emergency Extend switch to the NORMAL position. This is done to prevent burnout of the electrical door or gear extension motor.

c. If the NLG doors fail to unlock (gear up) with the use of the Emergency Extend switch, depress the NLG emergency door unlock button and simultaneously place the emergency extend switch to the EXTEND position.

d. Check that the NLG is down and locked.

e. Place the NLG emergency extend switch to NORMAL.

Note

If hydraulic system No. 1 is lost, emergency steering shall be selected. Normal steering, rudder pedal steering and crosswind positioning will not be available.

LANDING GEAR MANUAL CONTROLS

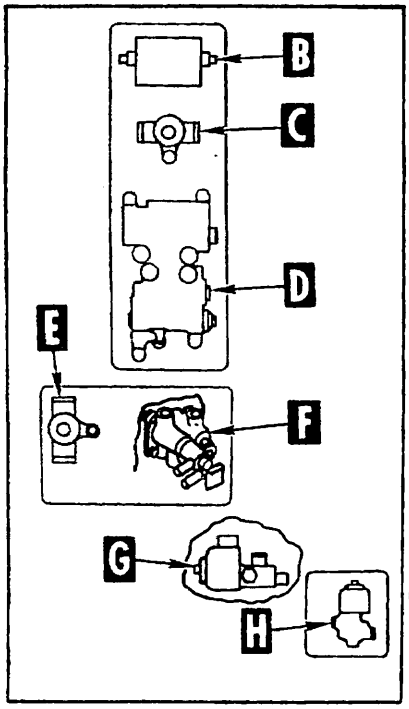

A

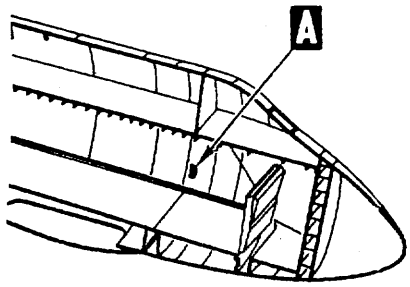

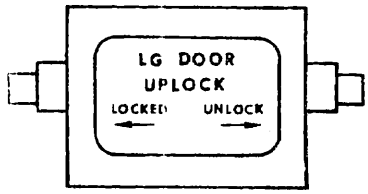

NLG DOOR UPLOCK MANIFOLD (1)

B

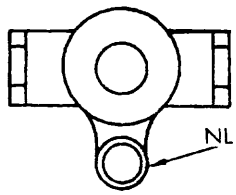

NLG EMERGENCY ISOLATION VALVE

C

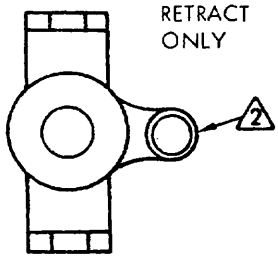

NLG RETRACT MANIFOLD

E

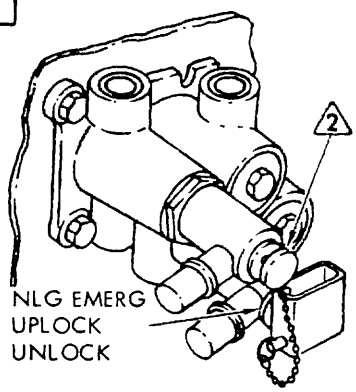

NLG EMERGENCY UNLOCK HYDRAULIC MANIFOLD

F

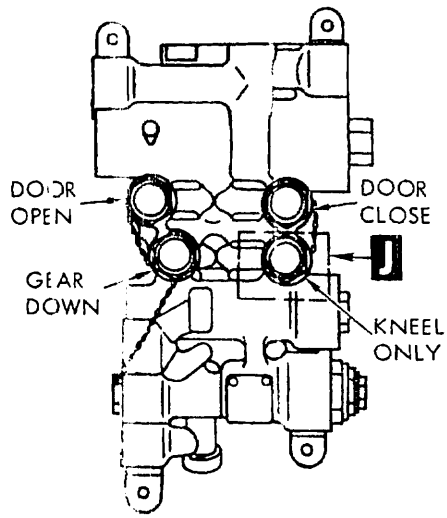

NLG HYDRAULIC MANIFOLD

D

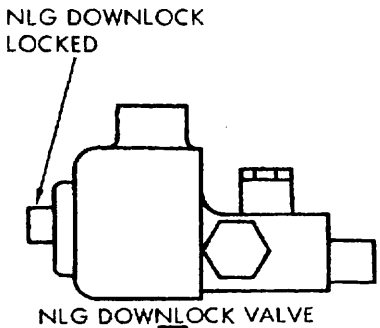

NLG DOWNLOCK VALVE

G

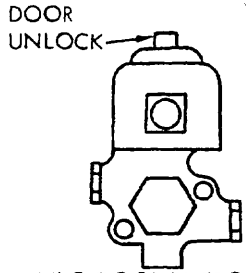

NLG DOOR EMERGENCY UNLOCK VALVE

H

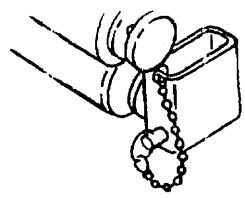

J

C5A-1-X4/0-153-1

Figure 3-11. (Sheet 1 of 3)

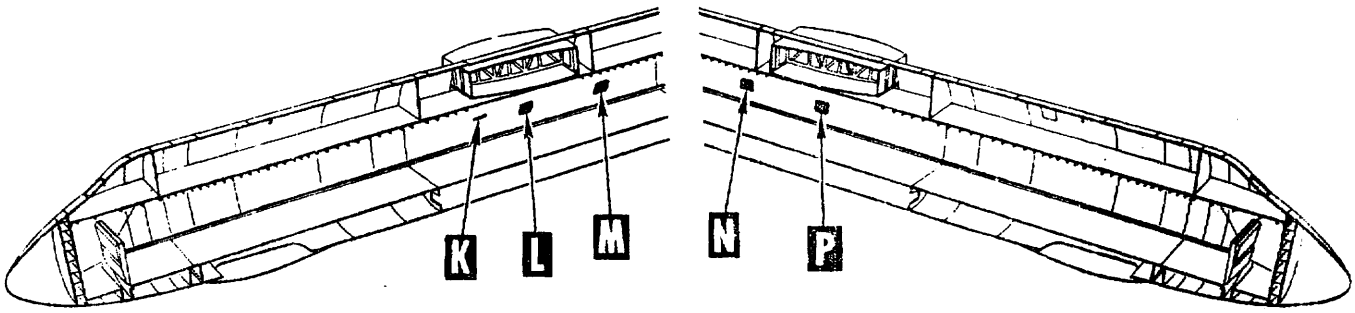

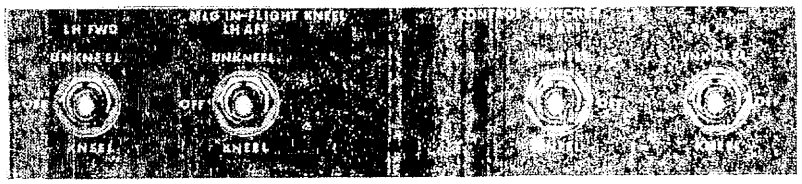

MAIN LANDING GEAR IN-FLIGHT
KNEEL CONTROL SWITCHES PANEL
K (3)

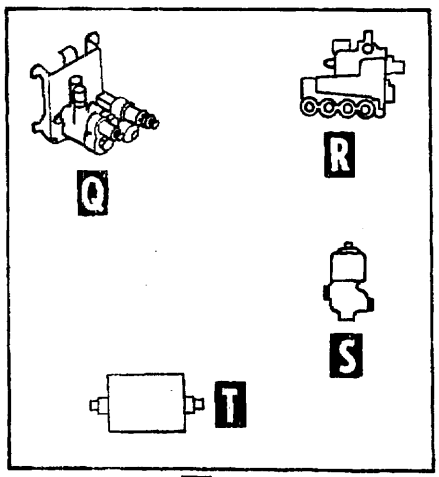

L FUS STA
1340 - 1390

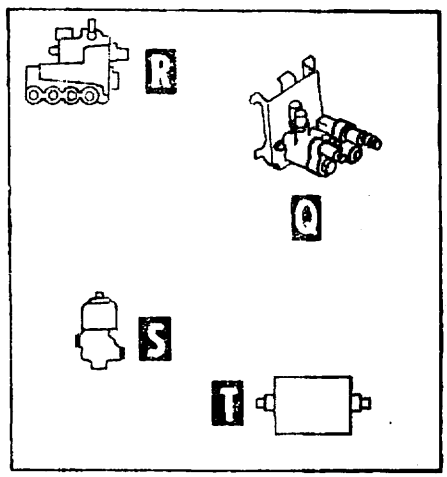

M FUS STA
1530 - 1570

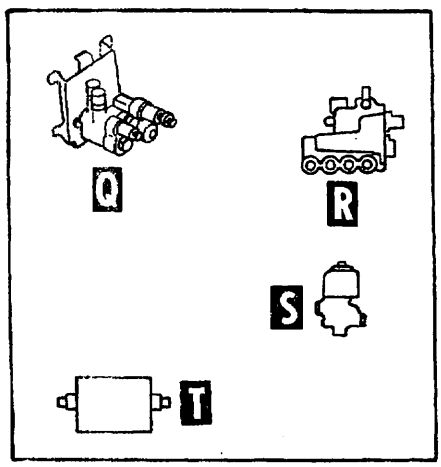

N FUS STA
1540 - 1570

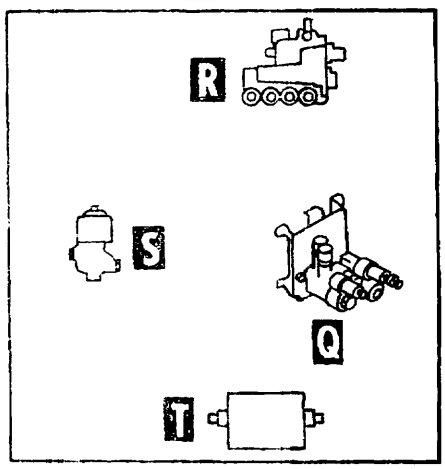

P FUS STA
1340 - 1370

C5A-1-X3/4-153-2

Figure 3-11. (Sheet 2 of 3)

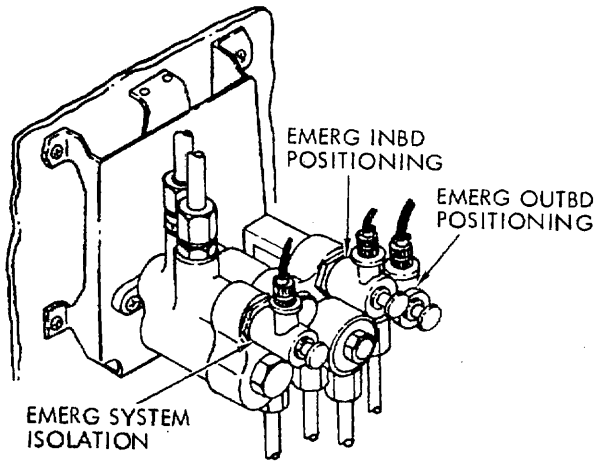

MAIN LANDING GEAR EMERGENCY HYDRAULIC MANIFOLD

Q

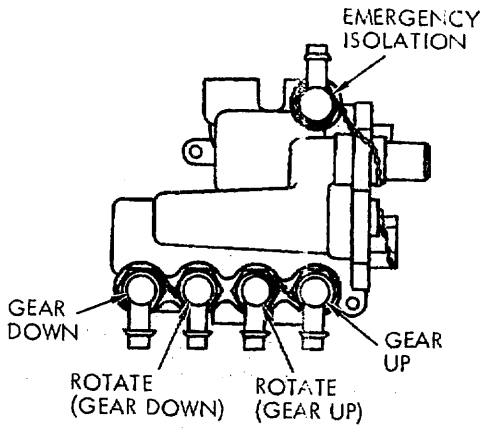

MAIN LANDING GEAR HYDRAULIC MANIFOLD

R

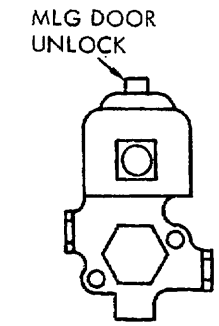

MLG DOOR EMERGENCY UNLOCK VALVE

S

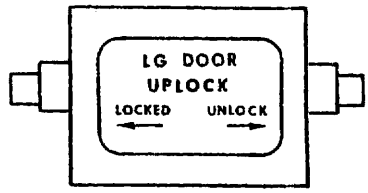

MLG DOOR UPLOCK MANIFOLD ⚠1

T

NOTE

⚠1 ON 00454 AND UP AND AIRPLANES MODIFIED BY T.O. 1271.

⚠2 DEACTIVATED ON ALL AIRPLANES.

⚠3 REMOVE ON 68304, 68307, 70167, 70168 AND 70170 THRU 00460 MODIFIED BY T.O. 1345.

C5A-1-X3/4-153-3

Figure 3-11. (Sheet 3 of 3)

NOSE LANDING GEAR FIBER OPTIC SCOPE

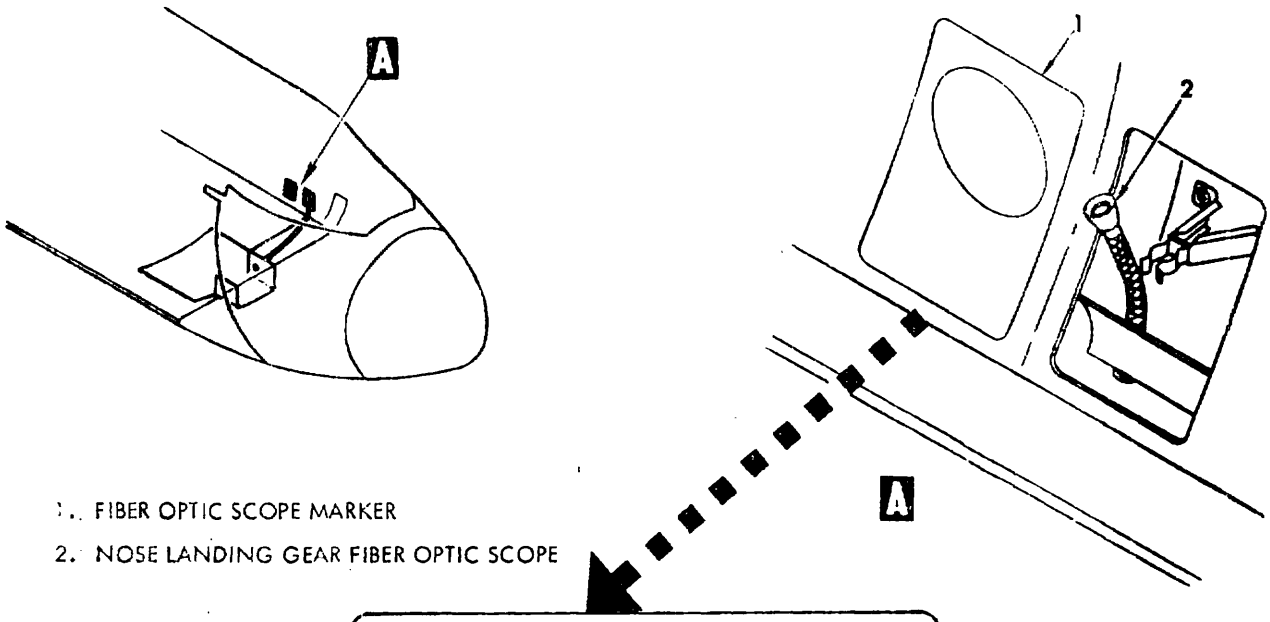

1. FIBER OPTIC SCOPE MARKER
2. NOSE LANDING GEAR FIBER OPTIC SCOPE

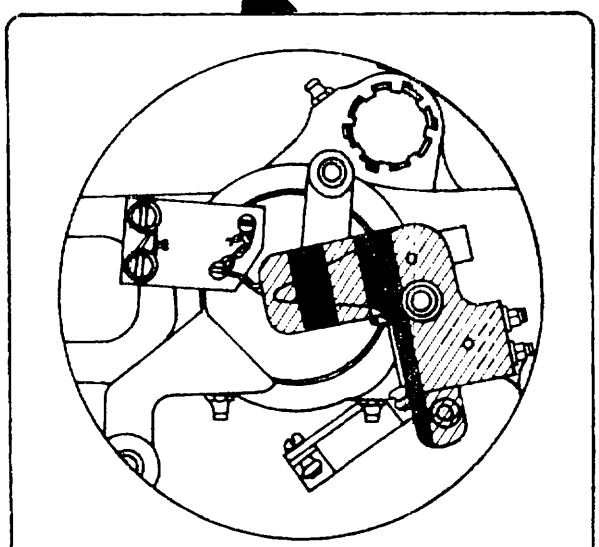

NOSE GEAR DOWN AND LOCKED

NOSE GEAR IS DOWN AND LOCKED WHEN THE RED AND BLACK BANDS ON FLAG AND MARKER ARE ALIGNED AS SHOWN ABOVE WITH NO WHITE AREA BEING VISIBLE

NOTE

THE TARGET IMAGE MAY BE CHANGED BY ROTATING THE FIBER-OPTIC SCOPE EYE PIECE.

RED

BLACK

C5A-1-X3/2-174

Figure 3-12.

Bogie Pitch Annunciator Light ON with Landing Gear Lever Up.

If a bogie pitch annunciator light comes on with the landing gear lever up, the probable malfunction is a failure of the MLG side brace locked switch. With this failure, the MLG would receive gear down rotate pressure as soon as the landing gear lever is placed in DN. To extend the landing gear with this indication, proceed as follows:

a. Disconnect the electrical connector from the rotate (gear down) manual override valve on the affected main landing gear hydraulic manifold.

b. Depressurize the airplane and remove the affected MLG inspection cover.

c. Depress and hold the affected rotate (gear up) button.

d. Place the landing gear lever to DN.

e. When all other landing gear indicate green wheels, release the rotate (gear up) button.

f. Visually check that the affected MLG side brace is locked (red alignment marks aligned).

g. Reconnect the electrical connector to the rotate (gear down) manual override valve and check that the gear rotates to zero degrees (green wheels indication).

If a bogie pitch annunciator light is on with the landing gear in the up position and the hydraulic system powering that gear is lost, the following extension procedure must be followed.

a. With the landing gear lever up and the airspeed less than 200 KCAS, remove the down lock switch card from the affected MLG sequence control panel (card 5F for fwd gears or card 6A for aft gears).

b. Install a spare switch card in the vacant downlock connector.

c. Follow the Emergency MLG Extension - Hydraulic Pressure Not Available procedure in this section.

Emergency In-Flight Landing Gear Kneeling.

To kneel a main landing gear in flight accomplish the following:

Note

All main landing gear can be fully kneeled regardless of bogie pitch position. The forward main gear can be fully kneeled in flight regardless of bogie rotation position (0 to 90 degrees). The aft main gear can be fully kneeled in flight except for a bogie rotational position of 45 to 85 degrees. In this position the inboard aft tire will contact the fairing aft of the outboard door opening stalling out the kneel drive module. The tires may not clear the ground on landing.

On 00461 and up and airplanes modified by T.O. 1345, a main landing gear may be kneeled inflight by accomplishing the following:

a. Depress and hold the Kneel button on the affected kneel control valve until the appropriate kneeled light comes on, then release the button.

Note

If the gear does not move toward the kneeled position, depress and hold the Rotate (Gear Down) manual override button on the affected MLG hydraulic manifold while repeating the above step.

On 68304, 68307, 70167, 70168 and 70170 through 00460 not modified by T.O. 1345, a main landing gear may be kneeled in flight by accomplishing the following:

a. Place the Arm/Safe switch, for gear to be kneeled, to the ARM position.

b. Place the Pwr Supply & Iso Valve switch to the ON position.

c. Actuate the Inflight Kneel switch, for gear to be kneeled, to the KNEEL position and hold for 8 minutes.

d. After the gear is in its kneel position, place the Pwr Supply & Iso Valve switch to the OFF position and the Arm/Safe switch to the SAFE position.

Crosswind Asymmetry Malfunction During Taxi (Crosswind Inoperative Light On).

If the crosswind inoperative light comes on during taxi or landing roll, slow the airplane to less than five knots and compare the crosswind indicator and the MLG indicators with the controller setting.

a. If no asymmetry exists, hold the X-Wind Reset switch in RESET momentarily while observing the MLG indicators.

CAUTION

Should the MLG indicators move toward an asymmetric condition, release the X-Wind Reset switch immediately.

The crosswind inoperative light should go off and remain off after the X-Wind Reset Switch is released.

b. If one MLG is asymmetric with respect to the other MLGS, hold the X-Wind Reset switch in RESET just long enough to determine if divergent gear is correcting or diverging. If divergent gear is correcting, hold in RESET until all gears satisfy command. The crosswind inoperative light should remain off after the X-Wind Reset switch is released. If the divergent gear is diverging, hold the divergent gears emergency positioning switch in the direction which will tend to correct the asymmetry. Taxi forward to allow ground loads to align the divergent gear.

CAUTION

If a change of crosswind command is required, operate the X-Wind Reset switch only while the divergent gears Emergency Positioning switch is held in the required direction.

c. If the crosswind inoperative light comes on during a turn while the power back mode is being used, hold the X-Wind Reset switch in RESET immediately while monitoring MLG indicators.

CAUTION

If a forward MLG is moving from center, release the X-Wind Reset switch and stop the airplane.

Release the X-Wind Reset switch when the aft gears return to center. The Crosswind Inoperative light should remain off.

Crosswind Asymmetry Malfunction During Flight (Crosswind Inoperative Light On).

a. Place the X-Wind Reset switch to RESET and release to NORMAL.

b. If the system does not return to normal, place the Crosswind Positioning knob to zero and position the

Main Landing Bogie Emergency Positioning switches LEFT or RIGHT as necessary to drive the gear to zero.

c. A nose gear that will not return to center when the Crosswind Positioning knob is placed to zero may be corrected by opening the NLG control circuit breaker and centering the nose gear with the steering wheel.

Note

With the NLG control circuit breaker open, rudder pedal steering will be inoperative.

Emergency NLG Extension-Emerg Sw On Light On.

Illumination of the emerg sw on light, while in flight with all the landing gear Emergency Extend switches in the NORMAL position, indicates a failure of the NLG door control relays. If the NLG does not extend by placing the landing gear lever down, attempt to extend the NLG with the procedure that follows:

CAUTION

Do not attempt to extend the NLG using only the Emergency Extend switch. To do so could damage the NLG doors.

a. NLG Control Circuit Breaker - OPEN

b. On 00454 and up and airplanes modified by T.O. 1271, depress and hold the LG Door Uplock Unlock button and the NLG Door Open button, in this order, for 10 seconds. Release buttons.

On 68304, 68307, 70167, 70168 and 70170 through 00453 not modified by T.O. 1271, depress and hold the NLG Door Open button for 10 seconds. Release the button.

c. NLG Downlock Locked Button - DEPRESS AND HOLD

d. NLG Down Button - DEPRESS AND HOLD

Note

Both buttons (in steps c and d) must be held simultaneously for a minimum of 15 seconds to ensure that the NLG is down and locked.

e. The fiber optic scope (figure 3-12) should be used to visually check that the NLG is down and locked. If the NLG is not down and locked, proceed to the next step.

CAUTION

Failure to use the following procedure may result in the NLG extending into a closed door.

f. NLG Emer Extend AC Circuit Breaker - OPENED

Prior to positioning the NLG Emergency Extend switch to EXTEND, open the NLG emerg extend AC circuit breaker.

g. Left Emerg Elec Ovride Switch - DOOR OPEN

Place and hold the left Emerg Elec Ovride switch on the NLG relay panel to the DOOR OPEN position.

h. NLG Emergency Extend Switch - EXTEND

After the NLG Emergency Extend switch is placed to EXTEND, continue holding the left Emerg Elec Ovride switch in the DOOR OPEN position for approximately 2 minutes to assure that the doors are fully open. A visual inspection by a chase plane or tower fly-by is desired.

Note

Due to the above failure, a red wheels indication does not necessarily mean that the doors are open.

i. NLG Emer Extend AC Circuit Breaker - CLOSED

The NLG should extend after closing the circuit breaker.

Note

If the NLG does not extend within 2 minutes, accomplish step j.

j. Right Emerg Elect Ovride Switch - NLG EXT

Position and hold the right Emerg Elec Ovride switch on the NLG relay panel to the NLG EXT position until the NLG is down and locked.

k. NLG Emergency Extend Switch - NORMAL

Return the NLG Emergency Extend switch to the NORMAL (down) position after the NLG indicator displays green wheels.

BRAKE SYSTEM FAILURE.

Brake System Check (Inflight).

WARNING

With the loss of No. 1 and 4 hydraulic systems, do not accomplish the Brake System Check (inflight).

After extending any MLG by an emergency procedure, the following steps must be accomplished to ensure that brake pressure is available to all wheels.

a. Place the Anti-Skid switch OFF.

b. Depress the brake pedals and note the no brakes light to go out and the brakes light to come on. Place the Anti-Skid switch ON.

c. If the brakes light does not come on, place the Anti-Skid switch OFF, select alternate brakes, and repeat the above steps.

d. If the brakes light does not come on in the ALT position, select EMERG brakes. The emerg hyd light shall come on.

e. If the brakes light does not come on, perform the Anti-Skid System Failures procedures in this section.

Loss of System Pressure.

If fluid in No. 4 hydraulic system is lost, the Brake switch shall be placed to ALT and the flight engineer shall monitor the No. 1 hydraulic system quantity gage. If the gage indicates a decrease in No. 1 system quantity, the Brake switch shall be placed in EMER. This will supply pressure to the brakes from the emergency brake accumulator. Check that the emerg hyd light is on and read emergency brake pressure on the normal gage.

CAUTION

Use the brakes cautiously because anti-skid system is inoperative when pressure is supplied by the emergency accumulator.

WARNING

When emergency brakes have been selected, stop the airplane as soon as possible by using steady brake pedal pressure (do not pump brake pedals), for maximum utilization of remaining accumulator pressure. Chock the wheels. Do not attempt to taxi the airplane.

With a fully charged emergency accumulator, approximately 3 brake applications can be made. One full brake application is available with a pressure of 1,000 PSI.

Anti-Skid System Failures.

If the anti-skid system does not check properly, accomplish the following:

a. Landing Gear - DOWN

b. Anti-Skid Switch - TEST ARM

c. Brakes - APPLIED

Set and hold the brakes with the brake pedals. Do not set parking brakes.

d. Anti-Skid Control Box Indicator Lamp Switch - ON

The anti-skid control box is located on the cargo compartment sidewall aft of the left forward wheel well area.

e. Anti-Skid Control Box Test Selector - LOCK-WHEEL 1

Check the number of lights that remain OFF to determine the number of pairs of brakes that are incapable of being protected by the anti-skid system.

f. Anti-Skid Control Box Test Selector - LOCK-WHEEL 2

Check the number of lights that remain off to determine the number of pairs of brakes that are incapable of being protected by the anti-skid system.

As checked in step e or f, above, if one or more pairs of brakes are incapable of being protected from skidding and possible blowouts, the anti-skid system shall be left on, and excessive braking shall be avoided, if possible, to prevent probable blowout of the affected pair(s).

g. Anti-Skid Control Box Test Selector - LOCK-WHEEL 1-2

Check the number of lights that remain on at the anti-skid control box to determine the number of brakes that are in the free-wheeling mode. The anti-skid system shall be turned off when either of the following inoperable brake combinations occur (as indicated by the number of lights that remain on):

More than 6 pairs of brakes (12 wheels) (6 lights).
More than 4 pairs of brakes on a side (8 wheels) (4 lights).

h. Brakes - RELEASED

i. Anti-Skid Control Box Test Selector - OFF

Observe that all the indicator lights are on. If a light(s) is off, this indicates the probability that the affected pair(s) of wheels has brakes inadvertently applied, and that pair(s) of wheels will probably blow out on the landing roll out. The Anti-Skid Control switch shall be placed to ON, and proceed with normal anti-skid braking.

j. Anti-Skid Control Box Indicator Lamp Test Switch - OFF

k. Anti-Skid Switch - AS REQUIRED

If the anti-skid off light comes on prior to the landing check, accomplish the following:

a. Landing Gear - Down

b. Anti-Skid Switch - TEST ARM

c. No Brakes Light - ON

d. Brakes - APPLIED

Depress the brake pedals and check that the no brakes light goes off and the brakes light comes on.

e. Test 1 Pushbutton - DEPRESSED

If the no-brakes light comes on, the anti-skid system is operative. The skid control switch shall be placed to ON. Proceed with normal anti-skid braking.

If the brakes light stays on, the anti-skid system shall be turned off and the pilot shall attempt to modulate the brakes with the brake pedals.

f. Brakes - RELEASED

g. Anti-Skid Switch - AS REQUIRED

If the anti-skid system is inoperative, refer to Brake System Operation With Anti-skid System Inoperative, this section.

DITCHING.

The ditching charts (figure 3-14) give duties of personnel prior to, and after ditching. Figure 3-5 illustrates the emergency exits and figure 3-4 illustrates the evacuation routes to be used after ditching. The following are standard signals for ditching:

SIX SHORT BLASTS . . . PREPARE FOR DITCHING
ONE LONG BLAST . . . BRACE FOR IMPACT

Because of the configuration, size and bottom fuselage strength, the airplane is expected to exhibit smooth motions during the ditching maneuver and the basic fuselage shell, ramps, and the crew entrance and troop doors will sustain ditching pressures. However, these doors may not be operative. Secondary damage will result to the structure, such as landing gear door and pod failures, skin buckling, and the outboard engines and nacelle pylons may separate from the wing. The airplane flotation capabilities will allow adequate time for the crew and other personnel on the flight deck to abandon the airplane through the escape hatches.

Personnel in the troop compartment will have the same time for egress, plus the additional time required for the wing tanks to fill with water.

Controlled ditching will probably result in one of three cases (figure 3-13). Case 1, occurs when the pressure cabin is not ruptured by the ditching and the airplane will assume a slight nose-up attitude with all ditching emergency exits usable.

Case II, which is the most probable case, occurs when the lower pressurized cabin is damaged and the cabin is flooded to the cargo floor. Again, a slight nose-up attitude occurs. All ditching exits are usable if seas are not too high.

From Case II, the airplane will sink to Case III, with a nose-down attitude and the wings floating on the water. For Case III, only the troop compartment ditching exits will be usable. The length of time to sink from Case II to Case III will depend on the amount of damage to the airplane. Although the entire fuselage will eventually be flooded after ditching, the sink rate will be low for a controlled ditching because of the rugged lower surface skin and the practically water tight cargo floor over it. Procedures are based on the assumption that Case II will be experienced and that active crew members on the flight deck will exit from the airplane before Case III occurs.

Instruct all personnel to remain braced and strapped in until the airplane has come to rest. There may be several severe impacts.

Ditching Equipment.

Ditching equipment shall be in readiness at all times when flying over water. Prior to each overwater flight, the pilot will ensure that the necessary equipment is aboard, in serviceable condition, and stowed in the proper places (figure 3-1).

Ditching Exits - Flight Deck.

Two emergency overhead hatches (figure 3-2) are provided for ditching operations. An escape ladder, attached to airplane structure below each hatch, is used to reach the hatch. Escape descent reels for personnel are provided at each hatch. The primary exit for active crew members on the flight deck is the No. 1 hatch. An alternate route of exit is available through the relief crew area and the No. 2 hatch. Crew members in the relief crew area will use the No. 2 hatch, and one crew member will be assigned the responsibility of deploying the liferaft. All personnel will board the life raft in the vicinity of the No. 2 hatch.

Note

After the flight engineer has depressurized the airplane, both hatches may be removed and stowed prior to ditching. Removal of hatches inflight causes airstream noise which interferes with communications capability.

Ditching Exits - Troop Compartment.

Three escape hatches and a service door are provided for ditching operations. The loadmaster will assist in evacuating troops and carrying out duties outlined in the ditching chart. The loadmaster shall be seated in one of the right rear seats of the troop compartment. Alternate locations for the loadmaster shall be next to the No. 4 hatch or No. 6 service door.

Note

All escape hatches shall be removed and stowed prior to ditching. The service door shall be raised and locked in the stowed position.

Preparation for Ditching.

When a ditching is imminent, the condition of the sea shall be analyzed to establish the best possible heading for ditching. Waves move downwind, and the spray from wave crest is also blown downwind. Swells, however, do not always indicate wind direction and can be very large even when the wind is calm. Swells are the result of underwater disturbances. Over a sea, a pilot must be more exacting and alert when judging height.

In daylight the airplane shall be ditched along the top of the swell, parallel to the rows of swells, if the wind does not exceed 30 knots. In higher winds, it is recommended that ditching be conducted upwind to take advantage of lowered forward speed. However, it must be remembered that the possibility of ramming nose-on into a wave is increased, as is the possibility of striking the tail on a wave crest and nosing in.

Note

The two formulae for determining the length and velocity of swells are:

Length (ft.) = 5 x (period in sec.)^2

Velocity (knots) = 3 x (period in sec.)

Assuming a 10-second swell period, by substitution in the formulae, the swell length is found to be 500 feet with a velocity of 30 knots.

DITCHING

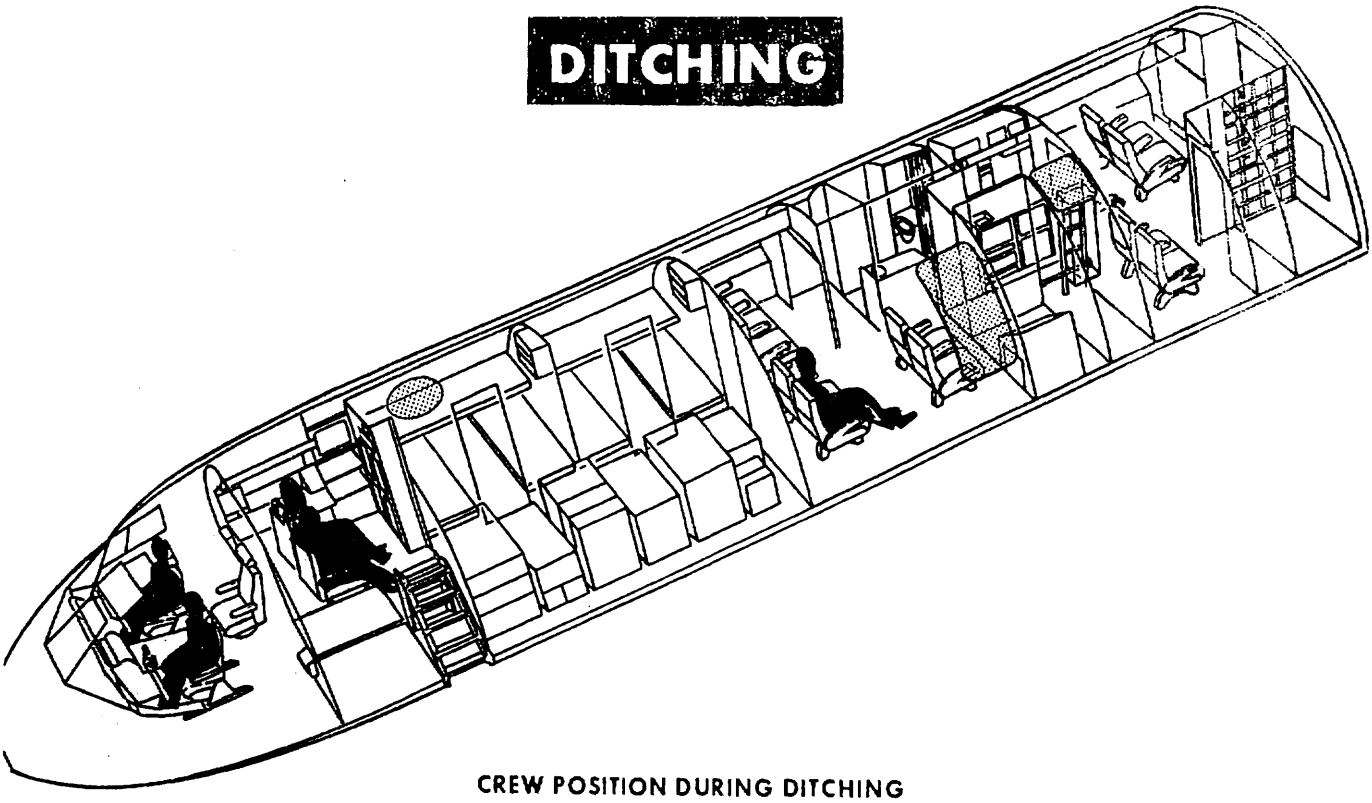

CREW POSITION DURING DITCHING

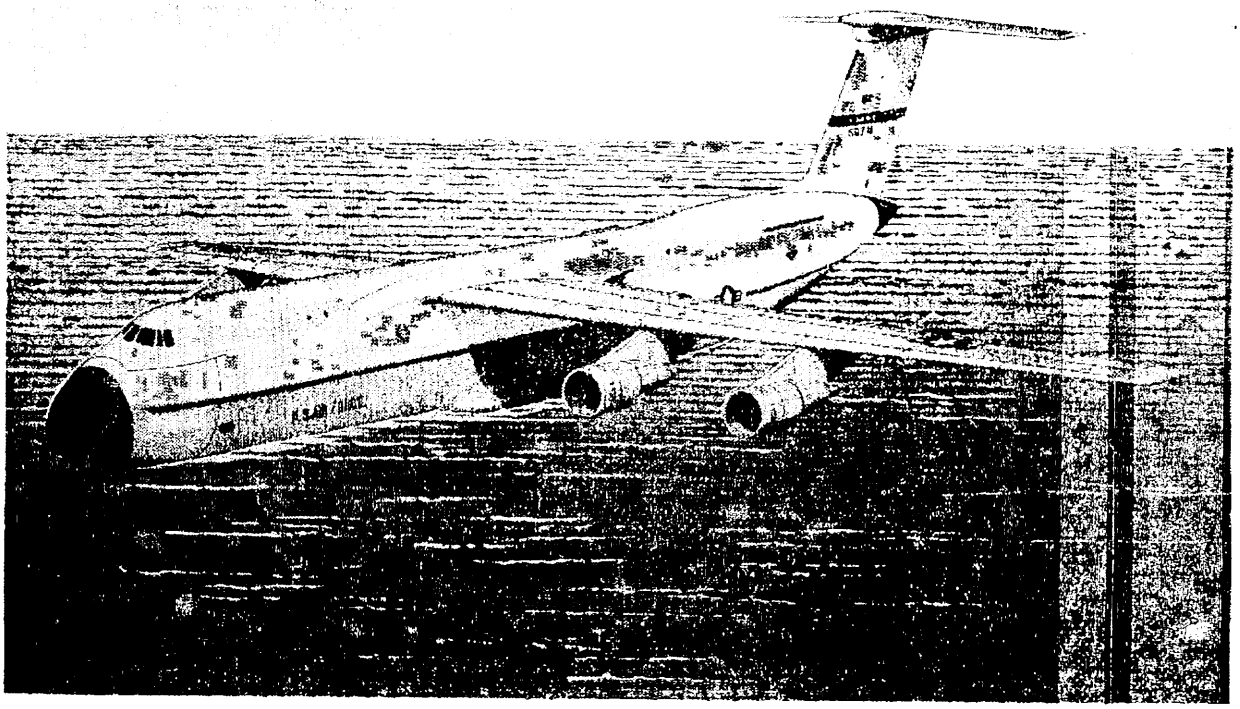

CASE 1

5A-1-6-170-1

Figure 3-13. (Sheet 1 of 2)

DITCHING

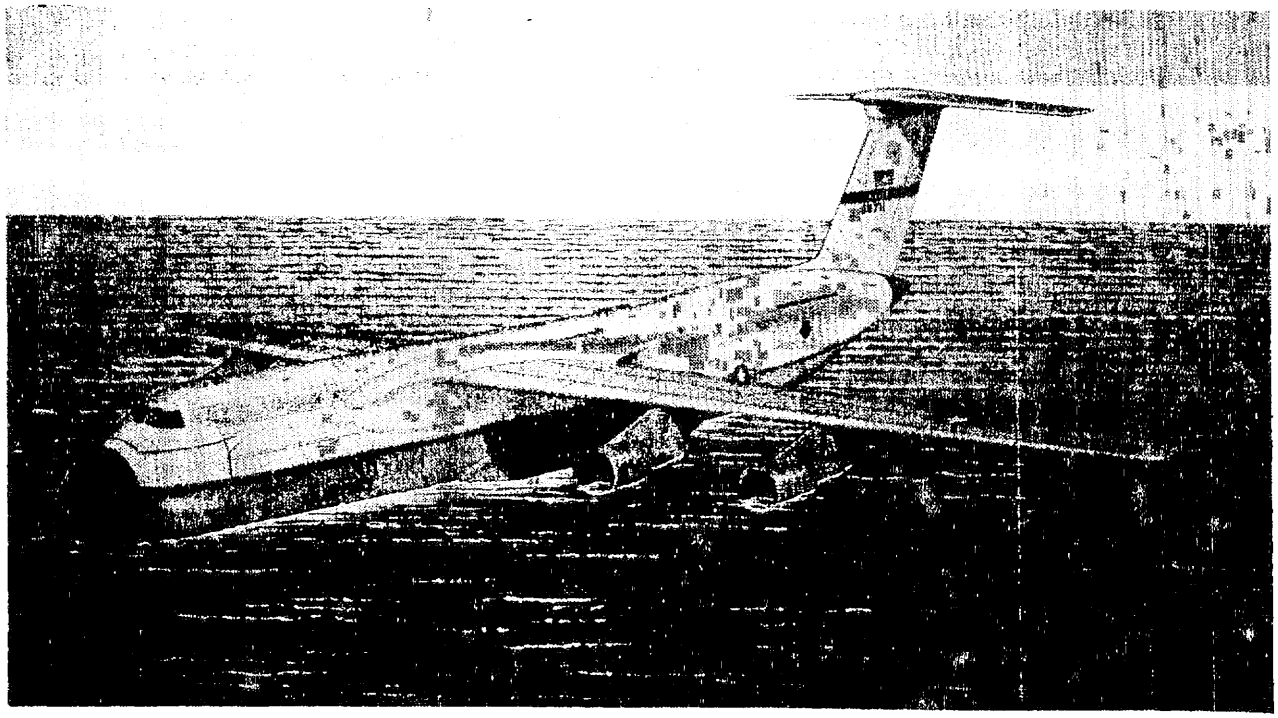

CASE II

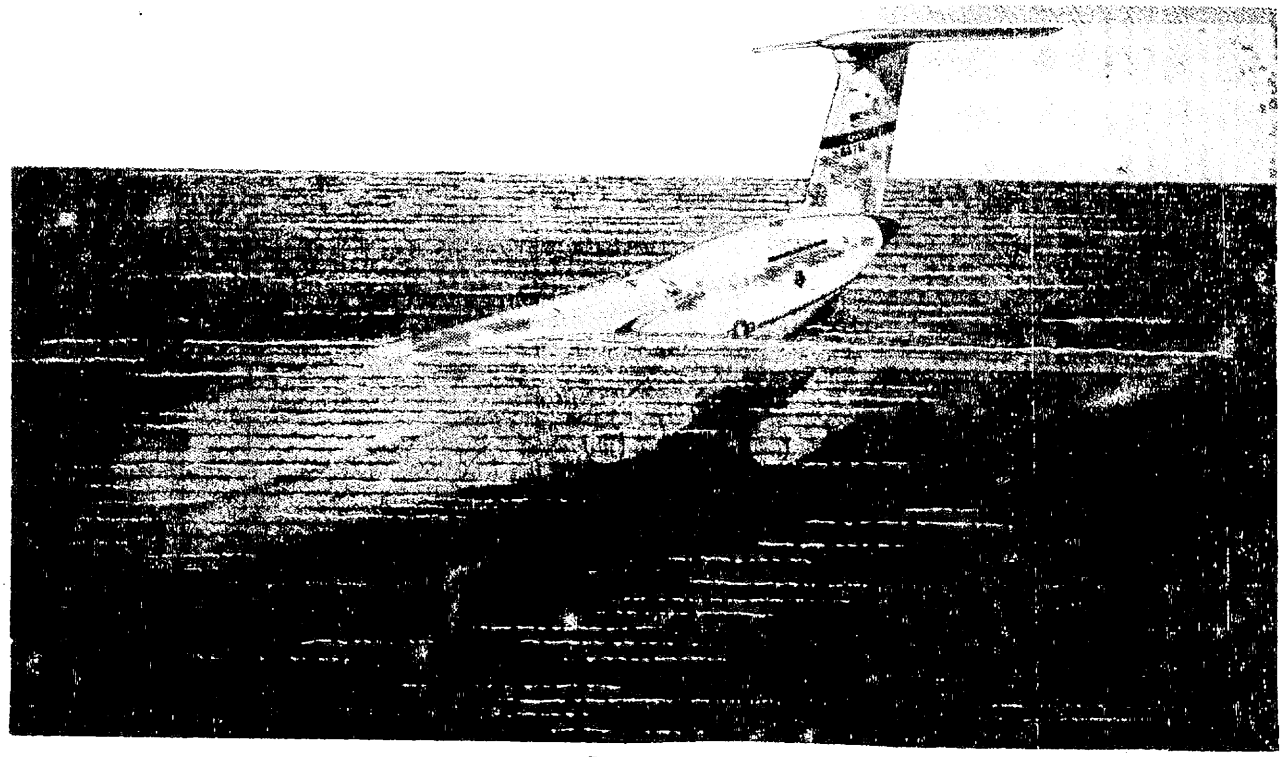

CASE III

C5A-1-1-170-2

Figure 3-13. (Sheet 2 of

The primary objective in a ditching is to contact the water at the slowest possible forward speed consistent with ample control and with a low rate of descent. The airplane shall be depressurized, and all loose equipment stowed or jettisoned during the descent. Jettison fuel as necessary; an empty tank will reduce gross weight and therefore reduce touchdown speed and provide buoyancy after the airplane comes to rest in the water. If a complete power failure is expected, attempt to ditch the airplane while there is still some power available. Operating conditions permitting, ditching shall be accomplished with the main landing gear extended, the nose landing gear retracted, and with landing flaps (100%).

CAUTION

Based on C-5A preliminary model ditching data, the following criteria shall apply: If the recommended configuration can not be achieved, the priority order is flaps down, main landing gear extended and nose landing gear retracted.

The following general rules are presented for selection of ditching heading:

a. Never land into the face of a primary swell system (or within 30 to 45 degrees of it) unless the winds are extremely high:

b. The best ditching heading is usually parallel to the major swell system and down the minor swell system.

c. The next best choice is parallel to the minor swell system and down the major swell system.

Prior to takeoff, the pilot will brief crew members on ditching duties and responsibilities. Crew members will be assigned to take charge of liferafts as appropriate.

The following functions are to be performed prior to ditching, to expedite exit from the airplane:

a. Open and latch all internal doors between the compartments in the flight deck.

b. Close and lock the door leading to the flight deck stairwell.

c. If seating space is available in the troop compartment, consideration should be given to moving crew members/troops/couriers from the flight deck compartments to the troop compartment. This procedure could result in more time being available for personnel to board the liferaft and make more ditching equipment available.

d. Remove and stow desk in flight deck, and install the two seats immediately forward of the No. 5 service door in the aft facing position.

WARNING

Liferaft mooring lines must be attached to the airplane so that the liferafts will not drift away from the airplane during ditching operations.

SEA STATE TABLE

VELOCITY KNOTS	SEA INDICATIONS	HEIGHT OF WAVES, FT.
	DITCH ON TOP OF A SWELL, PARALLEL TO THE SWELLS	
Calm	Like a mirror; glassy sea; no white caps	0
1-3	Ripples with the appearance of scales are formed, but without foam crest	6 inches
4-6	Small wavelets, still short but more pronounced; crests have glassy appearance and do not break.	1 ft.
7-10	Large wavelets; crests begin to break. Foam of glassy appearance; few very scattered whitecaps.	2 ft.
11-16	Small waves, becoming longer. Fairly frequent whitecaps.	5 ft.
17-21	Moderate waves, taking a more pronounced form; many whitecaps.	10 ft.
22-27	Large waves begin to form; white foam crests are more extensive (probably some spray).	15 ft.
28-33	Sea heaps up and white foam from breaking waves begins to be blown in well-marked streaks along the direction of waves. Blowing spray along direction of waves.	20 ft.
34-40	Moderately high waves of great length; edges of crests break into spindrift; foam is blown in well marked streaks in the direction of the wind. Extensive white caps with blowing spray.	25 ft.
41-47	High waves. Dense streaks of foam along the direction of the wind; sea begins to roll; continuous blowing spray.	30 ft.
48-55	Very high waves with long overhanging crests; foam is blown in dense white streaks along the direction of the wind; whole surface takes on a white appearance. Visibility is affected.	35 ft.

Note

The heights given for the wind-driven sea are approximate. The height depends on the length of time and steadiness with which the wind has blown, and the distance the waves have been driven by wind blowing in a constant direction, without obstruction. Remember that it is possible to have a heavy swell running in an area where there is little or no surface wind. Also, a heavy swell system may be obscured or hidden beneath a local wind-driven system.

Wind velocity will be greater than average for a given sea condition and wave height when a storm is building up and vice versa when a storm is abating.

The smooth water side of white caps is upwind.

Ditching Techniques.

Power-On Ditching.

Whenever possible, the airplane shall be ditched while power is still available. Power will allow the pilot to select the spot for ditching to obtain best possible sea conditions, most favorable landing position and attitude, and to maintain more positive control of the airplane. Best results will be obtained by following the procedures outlined below.

APPROACH.

The final approach to ditching shall be flown in the ditching configuration at 15 knots below approach speed, and at the lowest possible rate of descent. When operating with asymmetric thrust, maintain 15 knots below approach speed or the appropriate inflight minimum control speed, whichever is higher. Maintain the best heading as determined by wind and sea conditions.

FLARE AND WATER CONTACT.

Because of lack of outside reference over water, it will be difficult to determine when to start the flare. This is especially true at night. The radar altimeter should be utilized as an aid in determining height above the sea. When a ditching point is determined, the flare shall be accomplished so as level off approximately 10 feet above the swell. Slowly retard the throttles and maintain airspeed so as to contact the water approximately 20 knots below approach speed. This will assure a nose high attitude and help avoid striking the water with the nose of the airplane. Contact the water at a low rate of sink and a slow, but controllable, forward speed.

WARNING

Under no circumstances shall the airplane be stalled in. This will result in excessive nose high attitude and may result in rapid nose down pitch following contact. The resulting structural damage and leaks will reduce the safety of the ditching operation.

Partial Power Ditching.

When ditching with one or more engines inoperative, the following shall be borne in mind:

With two engines inoperative on the same side of the airplane, use power on the other inboard engine only, if flight conditions permit. If power is available from the No. 2 and 4 engines or the No. 1 and 3 engines, considerable power may be used to control the airplane.

Use power to maintain, as close as possible, the required ditching attitude and minimum rate of sink. The approach, flare and water contact procedures shall be the same as for the power-on ditching.

Power-Off Ditching.

The following Power Off recommendations are made without benefit of flight test:

Hydraulic power from the RAT will be marginal at low airspeeds making it critical to maneuver the airplane and to maintain sufficient frequency on the hydraulic motor-driven AC/DC generator to give reliable indications on the flight instruments. It is recommended that both APUs and ATMs be placed in operation and an APU generator put on the line. The ATMs will provide additional hydraulic pressure for flight controls and also enable the flaps to be extended. The flaps shall be extended slowly by increments, with Power Transfer switches OFF so that flight control and required airspeed are maintained. All flap extension, trimming, and major maneuvering shall be accomplished while at an altitude above 1,000 feet. The ditching heading shall be selected and the approach planned so that the last part of the approach will be made in a trimmed straight gliding path that requires only small amounts of elevator and aileron control to flare the airplane. A slightly nose high attitude at a low rate of sink shall be set up and maintained until touchdown. As the airplane touches down, nose-up elevator shall be held as long as possible to delay the nose digging into the swells.

WARNING

If the RAT is the only source furnishing hydraulic power, the flaps cannot be extended and approach speed shall be maintained until touchdown. If the APU(s) have been started, and an APU generator is on the line, Power Transfer switches shall be in the OFF position during any flap operation. Power transfer pump operation during flap operation could result in a serious reduction in flight control capability.

Note

If possible, landing flaps (100%) shall be extended for power-off ditchings.

Crosswind Ditching.

The basic rules for power on ditching will still apply, in addition to the following:

Crab the airplane to kill drift.
Land on the downward side of the swell or wave.

Upwind Ditching.

The basic rules for power on ditching will still apply, in addition to the following:

Maintain nose-up condition avoid nose striking wave face.
Touch down immediately behind the crest of a rising wave, avoid the face of the wave.
Hold nose-up elevator during ditching.

Night Ditching.

It may not be possible to examine the sea surface, thereby increasing the chances of landing head-on into a swell.

Conduct night ditching with the aid of instruments to establish proper attitude of airplane. The airplane attitude and configuration shall be the same as for power on ditching.

Make an instrument approach and maintain approach speed. At 500 to 700 feet above the water (use the radar altimeter, if available, to aid in determining height), set up approximately 200 feet per minute rate of descent and maintain approach speed, with landing flaps (100%) extended, until contact with the water.

Use landing lights as necessary.

Hold wings level to avoid digging a wing into the water and cartwheeling the airplane.

Abandoning Airplane.

WARNING

The pilot's and copilot's side windows may be used as emergency exits; however, heavy flooding may result. No emergency hatches or doors should be removed or opened, if underwater, unless no other means of egress are available.

Evacuation of the airplane after ditching shall be accomplished in an orderly manner in the shortest time possible. If compartments are dark and filling with water, difficulty in personnel movement can be expected. Flight crew members can use their flashlights to control and expedite the movement of personnel in locating the emergency exits.

WARNING

The crew and troops must not leave ditching positions until the airplane has stopped its forward movement. Serious injuries can occur if personnel unfasten their seat belts prior to the airplane coming to a full stop.

Immediately after the airplane comes to a stop, the crew members must carry out their after ditching duties (figure 3-14) and then evacuate the airplane carrying the required equipment. The troops in the troop compartment may need the escape ropes at the exits for entry into the liferafts.

WARNING

Personnel shall not inflate their life vests until outside the airplane and clear of escape hatches. Prior to entry into the water, inflate the life vests.

Crew Duties.

When the airplane has come to a complete stop, each crew member will proceed with the following duties:

ALL CREW MEMBERS.

Shall check each other for injuries. If injuries have occured, crew members who are able shall assist injured personnel to evacuate the airplane after the escape hatches have been removed and the liferafts and escape ropes deployed.

TROOP COMPARTMENT LOADMASTER.

Shall check the troops for injury, assist and instruct troops who are able, to evacuate any injured troops.

Shall assure personnel, previously designated, have removed the No. 3R and No. 4 escape hatches, and the No. 6 escape door (aft service door).

Shall assure personnel, previously designated, have deployed the liferafts and escape ropes at the No. 3R escape hatch and No. 6 escape door (aft service door).

Shall deploy the liferaft and escape rope at the No. 4 escape hatch.

Shall assist troops in evacuating the airplane through the No. 3R and No. 4 escape hatches and through the No. 6 escape door (aft service door). He will make sure all troops have evacuated and then exit through the No. 4 hatch and board the liferaft.

DITCHING CHART (PLANNED)

NOTE

Sequence of events as presented may be varied depending on conditions existing.

FIRST ACTION	WHEN DITCHING IS IMMINENT (10 MINUTES LEFT)	PROVIDE	POSITION	AFTER DITCHING
PILOT 1. Warns crew to prepare for ditching, giving approximate time remaining. 2. Orders crew members to assume duties. Each crew member will acknowledge. 3. Orders copilot to start emergency procedures. 4. If required, orders flight engineer to jettison fuel. 5. Dons life vest. 6. Procures flashlight. 7. Fastens seat belt and shoulder harness. 8. When conditions permit, orders flight engineer to depressurize airplane.	1. Orders copilot to give prepare for ditching signal. 2. Orders copilot to send final distress signal. 3. Orders all on board to secure themselves in ditching position. 4. Orders all crew members and troops to turn on emergency flashlights connected to life vests. This procedure will provide light after ditching and will aid in locating persons injured during ditching. 5. Orders emergency exit lights switch to ARM . 6. Locks shoulder harness. 7. Immediately prior to ditching, gives "Brace for Impact" warning over interphone and P.A.	1. Flashlight and first aid kit. 2. Emergency exit light.	Pilot's seat	1. Checks flight deck to insure that all flight deck crew members have evacuated. 2. Exits through the No. 1 hatch. 3. Proceeds to the No. 2 hatch to board the liferaft or uses the emergency descent reel at No. 1 hatch to descend to the water and then swims to the liferaft. 4. Boards raft and assumes command.
COPILOT 1. Acknowledges pilot's order to prepare for ditching. 2. On pilot's orders, turns IFF to emergency, transmits MAYDAY followed by emergency message giving position, flight time, nature of emergency, and other pertinent information on HF, UHF and VHF (Use normal frequencies if possible). 3. Obtains DF service and bearing fixes on normal ground frequency if possible. 4. Dons life vest. 5. Procures flashlight. 6. Fastens seat belt and shoulder harness. 7. Continues the radio emergency procedure every 10 minutes.	1. On pilot's orders, sounds prepare for ditching signal: six short blasts of the warning horns (2 seconds each). 2. Sends final MAYDAY position, altitude, course, speed, and intention of pilot as to ditching. 3. Checks emergency exit lights switch in ARM position. 4. Locks shoulder harness. 5. When pilot gives "Brace for Impact" warning over interphone, completes brace for impact signal by sounding one long blast on the warning horns (approximately six seconds). 6. Assist pilot in ditching the airplane.	1. Flashlight and classified data case.	Copilot's seat.	1. Exits through the No. 1 hatch. 2. Proceeds to the No. 2 hatch to board the liferaft or uses the emergency descent reel at No. 1 hatch to descend to the water and then swims to the liferaft.

C5A-1-XI/0-171-1

Figure 3-14. (Sheet 1 of 3)

FIRST ACTIONS	WHEN DITCHING IS IMMINENT (10 MINUTES LEFT)	PROVIDE	POSITION	AFTER DITCHING
FLIGHT ENGINEER 1. Acknowledge Pilot's order to prepare for ditching. 2. Computes gross weight, and ditching speeds. Passes this information to copilot. 3. Dons life vest. 4. Procures flashlight. 5. Continues duties as directed by pilot.	1. Fastens seat belt and shoulder harness. 2. Faces seat aft and lowers to bottom position. 3. Locks shoulder harness.	1. Flashlight and first aid kits.	Engineer's seat facing aft.	1. Exits through No. 1 hatch and proceeds to No. 2 hatch area to board the liferaft. 2. Checks to insure liferaft has been deployed. If liferaft has not been deployed, remove No. 2 hatch and deploy liferaft. 3. If unable to proceed to No. 2 hatch area, use emergency descent reel at No. 1 hatch to descend to the water and swim to liferaft.
NAVIGATOR 1. Acknowledge Pilot's order to prepare for ditching. 2. Prepares emergency message for transmission by copilot to include: Position, time, altitude, course, true airspeed, number of personnel aboard, nature of distress and intentions of pilot. 3. Dons life vest. 4. Procures Flashlight.	1. Assists pilot as directed. 2. Fastens seat belt and shoulder harness 3. Faces seat aft and lowers to bottom position. 4. Locks shoulder harness.	1. Flashlight.	Navigator's seat, facing aft.	1. Exits through No. 1 hatch and proceeds to No. 2 hatch area to board the liferaft. 2. If unable to proceed to the No. 2 hatch area, use emergency descent reel at No. 1 hatch to descend to the water and swim to the liferaft.

C5A-1-X4/0-171-2

Figure 3-14. (Sheet 2 of 3)

FIRST ACTIONS	WHEN DITCHING IS IMMINENT (10 MINUTES LEFT)	PROVIDE	POSITION	AFTER DITCHING
LOADMASTER 1. Acknowledge pilot's order to prepare for ditching. 2. Advises troops of impending emergency 3. When time and conditions permit, jettisons cargo and loose equipment and secures cargo that cannot be jettisoned. 4. Secures troop doors in main cargo compartment. 5. Removes and stows troop compartment escape hatches and deploys No. 6 service door to the UP and latched position. 6. If the only troops aboard are in the flight deck and the troop compartment kit is installed, including emergency equipment, consideration should be given to moving these troops to the troop compartment for ditching.	1. Rebriefs troops on ditching procedures and deployment of liferafts, and insures that they are properly seated and secured. 2. Dons life vest 3. Procures flashlight. 4. Notifies pilot when cargo compartment and troop compartment are secure. 5. Fastens seat belt and assumes ditching pasition.	1. Flashlight, first aid kit, and emergency exit light.	Troop Compartment Right, rear seat.	Troop Compartment 1. Directs deployment of all liferafts and escape ropes. 2. Assists troops in evacuating airplane. 3. Boards liferaft at No. 4 hatch, if possible.
SCANNER 1. Acknowledge Pilot's order to prepare for ditching. 2. Assists loadmaster in jettisoning and securing the cargo. 3. Rebriefs personnel in flight deck in ditching procedures. 4. Removes No. 1 and No. 2 hatches after airplane is depressurized.	1. Dons lift vest. 2. Procures flashlight. 3. Fastens seat belt and assumes ditching position.	Flashlight and emergency exit light.	Aft facing seat in relief crew area.	1. Deploys liferaft at No. 2 hatch and exits through No. 2 hatch. 2. Assist's personnel in evacuating airplane. 3. Boards liferaft.

C5A-1-X1/0-171-3

Figure 3-14. (Sheet 3 of 3)

CARGO COMPARTMENT LOADMASTER.

In the event troops are carried in the cargo compartment, shall check troops for injury and assist and instruct troops who are able to evacuate injured troops.

In event troops are carried in the cargo compartment, shall route troops up the cargo compartment stair/ladder to the troop compartment for evacuation through the No. 3R and No. 4 escape hatches and the No. 6 escape door (aft service door).

After making sure all troops are evacuated from the cargo compartment, shall exit the airplane through the No. 4 escape hatch.

SCANNER.

Shall check troops in the relief crew/courier compartment for injuries and assist and instruct troops who are able to evacuate any injured troops through the No. 2 escape hatch.

Shall remove the No. 2 escape hatch, pull the escape ladder down, and pull the liferaft release handle to automatically raise the liferaft in position, pull the liferaft case-hold-down pin and push the liferaft overboard.

If the liferaft fails to raise automatically, he shall operate the hand winch to manually raise the liferaft in position, pull the liferaft case-hold-down pin, and push the liferaft overboard.

In event the water level is too close to the No. 2 escape hatch, there may be insufficient fall of the liferaft package to permit automatic inflation. If this condition exists, the scanner shall pull hard on the cable mooring line leading from the raft case to the platform; this action will result in the inflation of the liferaft.

In event that the alternate means of abandoning the flight station and relief crew/courier compartment is to be used, No. 5 escape door (forward service door), the scanner shall complete the following duties:

a. Remove the escape ladder at No. 2 escape hatch.

b. Disengage the yellow down lock pin on the forward side of the liferaft carriage. Operate the manual deployment hand winch to lift the liferaft package about two inches above the stowed position.

c. Unfasten the two wing-nut handles at the edge of the platform. Slide the liferaft package, including the upper platform, straight forward toward the inboard side until the two platforms separate from each other.

d. Carry the liferaft package forward through the relief crew/courier compartment aisle and to the edge of the No. 5 escape door (forward service door).

e. Remove the platform, hang the ripcord grip type D-ring, located between the liferaft case and platform, on the mooring hook, below the forward corner of the service door.

f. Push the liferaft package out of the service door. The liferaft case will split automatically, and the liferaft will inflate.

Shall assist troops, when applicable, to evacuate the airplane through the No. 2 escape hatch or No. 5 escape door (forward service door) (when applicable) using the escape reels.

After making sure all troops, when applicable, are evacuated, will exit through the No. 2 escape hatch or the No. 5 escape door (forward service door) (when applicable) and board the liferaft.

FLIGHT ENGINEER.

Shall remove the No. 1 escape hatch, pull the escape ladder down, and exit the airplane through the hatch.

After exiting, shall proceed to the No. 2 escape hatch to assure the liferaft has been deployed.

If the liferaft has not been deployed, he shall operate the external handle to release the No. 2 escape hatch and remove the hatch, then pull the liferaft release handle to automatically raise the liferaft.

If the liferaft fails to raise, he shall operate the hand winch to manually raise the liferaft, pull the liferaft case-hold-down pin and pull the liferaft overboard. See figure 3-15 for the liferaft ejection system.

After the liferaft has inflated, he shall board the liferaft.

NAVIGATOR.

Shall exit the airplane through the No. 1 escape hatch and proceed to No. 2 escape hatch and board the liferaft.

COPILOT.

Shall exit the airplane through the No. 1 escape hatch and proceed to No. 2 escape hatch and board the liferaft.

PILOT.

Shall ensure that all crew members and the troops have evacuated, then exit through No. 1 escape hatch, and proceed to the No. 2 escape hatch and board the liferaft.

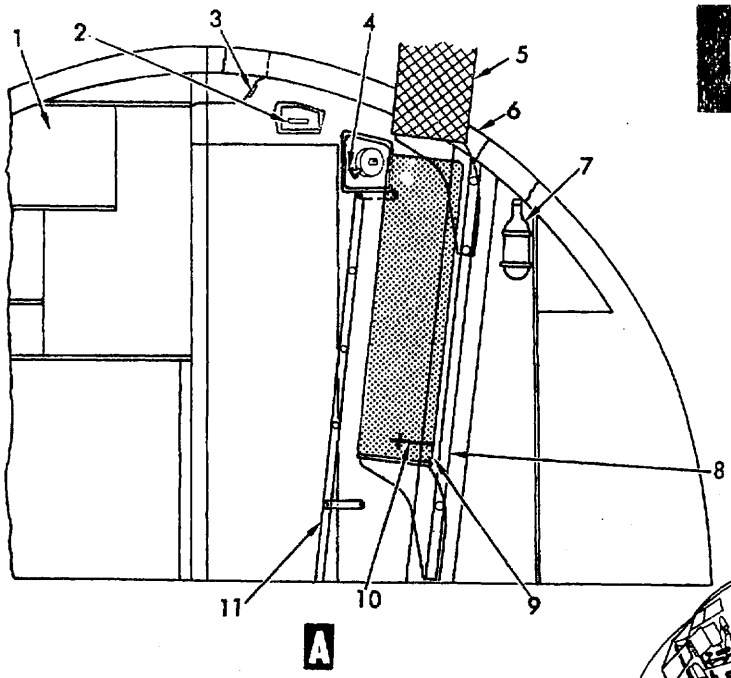

LIFERAFT EJECTION SYSTEM

1. CREW GALLEY
2. AUTOMATIC EJECTION HANDLE
3. EMERGENCY LIGHT
4. MANUAL EJECTION HANDLE
5. LIFERAFT READY FOR DEPLOYMENT
6. ESCAPE HATCH NO. 2
7. AIR BOTTLE
8. TRACK
9. LIFERAFT IN STOWED POSITION
10. DOWN LOCK PIN
11. LADDER

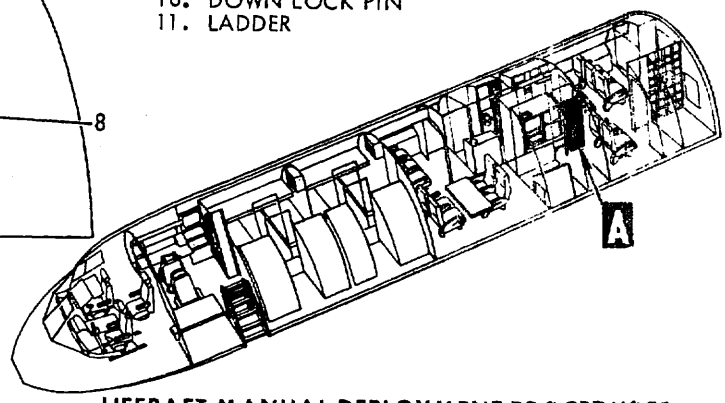

LIFERAFT AUTOMATIC DEPLOYMENT PROCEDURES.

TO AUTOMATICALLY DEPLOY THE RELIEF CREW AREA LIFERAFT, ACCOMPLISH THE FOLLOWING:

1. PULL THE ESCAPE LADDER DOWN, AND UNLATCH AND REMOVE THE ESCAPE HATCH.

2. PULL THE AUTOMATIC EJECTION HANDLE. PULLING THE EJECTION HANDLE STARTS AN AIR-DRIVEN MOTOR THAT TURNS A CABLE DRUM. THE AIR IS SUPPLIED BY AN AIR BOTTLE. THE LIFERAFT CASE THEN RISES AND STOPS WITH THE BOTTOM OF THE CONTAINER AT THE LEVEL OF THE OUTBOARD EDGE OF THE ESCAPE HATCH.

3. PULL OUT THE LIFERAFT CASE-HOLD-DOWN PIN AND PUSH THE CONTAINER OUTBOARD. SINCE THE CASE IS ATTACHED TO THE HOISTING MECHANISM BY A QUICK-RELEASE HINGE, A PUSH OUTBOARD CAUSES THE PACKAGE TO ROTATE ABOUT ITS HINGE-POINT AND FALL OUTWARD AND DOWN. AFTER FALLING FOR APPROXIMATELY 48 INCHES, THE CASE SEPARATES AUTOMATICALLY, THE RAFT INFLATES, AND IS KEPT CLOSE TO THE AIRPLANE, BY THE INFLATION/MOORING LANYARD.

NOTE

SHOULD THE CASE FAIL TO SPLIT AUTOMATICALLY OR THE LIFERAFT FAILS TO INFLATE AUTOMATICALLY, PULL THE "D" RING LOCATED ON THE TOP OF THE CASE STOWAGE PLATFORM. THE SAME SEQUENCE OF CASE SPLITTING AND INFLATION WILL OCCUR AS INDICATED IN STEP "3" ABOVE.

LIFERAFT MANUAL DEPLOYMENT PROCEDURES.

NOTE

DO NOT MANUALLY DEPLOY THE LIFERAFT UNLESS AN ATTEMPT HAS BEEN MADE TO AUTOMATICALLY DEPLOY THE LIFERAFT.

TO MANUALLY DEPLOY THE RELIEF CREW AREA LIFERAFT, ACCOMPLISH THE FOLLOWING:

1. PULL THE LIFERAFT AUTOMATIC EJECTION HANDLE TO ASSURE THAT THE HOISTING MECHANISM IS UNLOCKED.

2. PULL AND ALTERNATELY RELAX TENSION ON THE MANUAL EJECTION HANDLE. REPEAT THIS OPERATION UNTIL THE LIFERAFT CASE IS HOISTED INTO POSITION.

3. PULL THE LIFERAFT CASE-HOLD-DOWN PIN OUT AND PUSH THE CASE OUTBOARD.

THE SAME SEQUENCE OF CASE SPLITTING AND INFLATION WILL OCCUR AS IN STEP "3" OF THE AUTOMATIC DEPLOYMENT PROCEDURE.

NOTE

1. SHOULD THE CASE FAIL TO SPLIT AUTOMATICALLY OR THE LIFERAFT FAILS TO INFLATE AUTOMATICALLY, PULL THE "D" RING LOCATED ON THE TOP OF THE CASE STOWAGE PLATFORM. THE SAME SEQUENCE OF CASE SPLITTING AND INFLATION WILL OCCUR AS INDICATED IN STEP "3" OF THE AUTOMATIC DEPLOYMENT PROCEDURE.
2. IF THE LIFERAFT CANNOT BE DEPLOYED THROUGH THE NO. 2 HATCH, DUE TO JAMMING OF THE HATCH, REMOVE THE LIFERAFT FROM ITS EJECTION CARRIAGE AND MANUALLY DEPLOY IT THROUGH THE NO. 5 ESCAPE/SERVICE DOOR. USE THE DESCENT REELS AND EGRESS THROUGH THE NO. 5 DOOR, SLIDING DOWN THE FUSELAGE INTO THE LIFERAFT.

C5A-1-9-177

Figure 3-15.

SYSTEMS EMERGENCIES.

ANNUNCIATOR PANELS.

The following charts show the annunciator light callouts, the condition causing the light to come on, and the corrective action.

LIGHT	CONDITION	CORRECTIVE ACTION
ELEVATOR POWER	Hydraulic pressure in one or more of the elevator actuators is less than 1450 (±200) PSI.	Turn off inoperative actuator. Check the fluid quantity and pressure in the affected systems. If normal, return system to normal. If fluid or pressure loss is indicated, refer to Hydraulic System Failure in this section.
ELEVATOR FEEL	Hydraulic differential pressure is 20% or greater between either VFU assembly.	Turn off inoperative actuator. Check the fluid quantity and pressure in the affected systems. If normal, return system to normal. If fluid or pressure loss is indicated, refer to Hydraulic System Failure in this section.
RUDDER LIM	The rudder stop actuator has not moved to the position corresponding to airspeed.	If rudder is limited to less than required throw, place the Rudder Lim Switch to MIN Q. If rudder throw available is more than normally allowed by the rudder stop, use extreme caution when applying rudder.
RUDDER POWER	Hydraulic pressure in one or more of the rudder actuators is less than 1450 (±200) PSI.	Turn off the malfunctioning rudder hydraulic actuator. Check the fluid quantity and pressure in the affected systems. If normal, return system to normal. If fluid or pressure loss is indicated, refer to Hydraulic System Failure in this section.
AILERON POWER	Hydraulic pressure in one or more of the aileron actuators is less than 1450 (±200) PSI.	Turn off the malfunctioning aileron actuator. Check the fluid quantity and pressure in the affected systems. If normal, return system to normal. If fluid or pressure loss is indicated, refer to Hydraulic System Failure in this section.
RATIO SHIFT	One or both spoiler ratio shifters is not in the proper position with respect to flap position.	Refer to the Spoiler Ratio Shifter Failure procedures in this section.
SPOILER POWER	Hydraulic pressure in one or more of the spoiler actuators is less than 1450 (±200) PSI.	No corrective action to be taken.
AOA HEAT	Malfunction in one or more of the four angle-of-attack vane heaters.	Advisory.
PITOT HEAT	Malfunction in one or more of the four pitot heaters.	Avoid icing conditions.
SLAT-FLAP SYN	Slats did not fully extend before flaps reached 40 percent.	Refer to the Slat Drive Malfunction procedure in this section.

LIGHT	CONDITION	CORRECTIVE ACTION
LE SLAT ASYMMETRY TE FLAP ASYMMETRY	Indicated slat or flap system has detected an asymmetry condition.	Refer to Asymmetrical Flap or Slats Indication in this section.
LE SLAT BRAKE ON TE FLAP BRAKE ON	LE SLAT BRAKE ON light without LE SLAT ASYMMETRY light indicates slat torque tube brake engaged due to either a flap/slat decouple or a torque tube overspeed condition. LE SLAT BRAKE ON light with LE SLAT ASYMMETRY light indicates slat torque tube brake engaged due to an asymmetry condition. TE FLAP BRAKE ON light with TE FLAP ASYMMETRY light indicates flap brake engaged due to an asymmetry condition.	Refer to Asymmetrical Flap or Slats Indication in this section.
PRESS DOOR OPEN	One or more of the pressurized doors is open/unlocked.	Locate and attempt to close/lock door.
UNPRESS DOOR OPEN	One or more of the unpressurized doors is open/unlocked.	Locate and attempt to close/lock door.
CABIN PRESS-LOW	Cabin pressure above 10,000 feet equivalent.	Decrease altitude or prepare to use oxygen.
MAIN TANK LOW	One or both of the outboard main tanks is less than 75% full.	1. Reduce speed to 280 KCAS or M = 0.825, whichever is less. 2. Check extended range tanks and auxiliary tanks for fuel. 3. If any fuel is in the extended range or auxiliary tanks, fuel mismanagement has occurred. Initiate proper fuel management procedures. When normal fuel management is attained, resume speed. 4. If the extended range tanks and auxiliary tanks are empty, fuel mismanagement has not occurred. Disregard the light.
MAIN SUMP LOW	One or both of the outboard main tank sumps contains less than 1600 pounds of fuel.	1. Reduce speed to 280 KCAS or M = 0.825, whichever is less. 2. Turn on the other main tank fuel boost pump if not already on. 3. Assume a level flight attitude to allow the sump to fill. 4. When the sump light goes off, resume speed. 5. If the sump light remains on, do not exceed the speed in step 1.

LIGHT	CONDITION	CORRECTIVE ACTION
L FWD, L AFT, R FWD, R AFT BOGIE PITCH	Indicated bogie pitch is greater than 15° nose down or 11° nose up.	If the landing gear lever is up, refer to the Bogie Pitch Annunciator Light On with Landing Gear Lever Up procedure in this section. If the landing gear lever is down, proceed as follows: Visually inspect forward section of the bogie beam. If forward beam or wheels are in view, make landing. If forward beam or wheels are not in view, accomplish in-flight kneeling procedure.
CADC NO. 1, NO. 2	CADC inoperative.	CADC outputs unreliable. Check the navigator's IAS indicator for comparison of the No. 1 or 2 pitot-static systems in order to isolate the No. 1 or 2 pitot-static systems for failure.
On 80227 and up and airplanes modified by T.O. 529. STALL AUDIO OFF 1, 2	Indicates stall warning switch is OFF	Place switch to NORM, as required.
STALLIMIT OFF 1, 2	Indicated stallimiter switch is off or stallimiter channel has malfunctioned.	1. Place switch to ON, as required. 2. Turn malfunctioning stallimiter system off.
BLEED DUCT HOT	One or more of the left, center, or right bleed duct senses overheat condition.	Close bleed air shutoff valves as required.
APU FIRE	Fire in left or right APU compartment.	Pull appropriate APU fire handle and discharge agent.
FIRE WARNING (Airplanes Modified by T.O. 1387.)	Fire in compartment protected by fire suppression system.	Arm fire suppression system and depress illuminated zone pushbutton.
RAT UNLOCKED	RAT locking actuator unlocked.	Place RAT switch to RETRACT.
PITCH, YAW; LATERAL AUG FAULT	First failure in indicated augmentation system.	Attempt reset.
TRIM COMP INOP	Malfunction in trim compensator.	Be aware of light stick forces at aft C.G.
IFF	Set is not replying to a Mode 4 interrogation.	Check Mode 4 Enable switch and code selector for proper switch positions.
PITCH, YAW, LATERAL AUG INOP	Indicated augmentation system is inoperative.	Attempt reset.
PACS PITCH, ROLL OFF	Indicated PACS system inoperative.	Turn off malfunctioning system and expect higher control forces. Disengage autopilot CWS.
A/P PITCH, ROLL, YAW OFF	Indicated autopilot channel and all associated modes are inoperative.	Attempt reset, except below 700 feet altitude, in autoland mode.

LIGHT	CONDITION	CORRECTIVE ACTION
FLARE INOP	Automatic flare computer is inoperative. The autopilot pitch axis may disengage below the flare altitude.	Prepare to execute VFR, pilot controlled flare maneuver.
AUTO THROTTLE	Auto throttle system is inoperative.	Disengage autothrottle system.
VERT NAV OFF	Vertical navigation system is not engaged in a nav mode.	Disengage vert nav mode or re-select appropriate nav system.
AHRU FAULT	AHRU outputs differ from IMU/IDNE outputs when both Input Selector switches are in AHRU position.	If both Input Selector switches are in AHRU position, switch to IMU position on panel having HEADING FAULT or ATTITUDE FAULT light on. The AHRU FAULT light will remain on until (1) AHRU condition returns to normal and (2) Input Selector switch is returned to AHRU.
HAMS INOP	Both Input Selector switches are in IMU position, or both HAMS comparators in one axis have tripped with both Input Selector switches in AHRU position, or a single comparator has tripped with one Input Selector switch in IMU position and the other in AHRU position, or power to the HAMS has been lost.	Monitoring capability no longer exists. Disregard the light. Select switch positions to provide most usable heading and attitude displays.
HORIZ NAV OFF	Horizontal navigation system not engaged for nav mode.	Disengage horiz nav mode or re-select appropriate nav system.
GO-AROUND INOP	Go-around subsystem is inoperative.	Do not engage go-around subsystem.
NOSE LOC ANT OFF	Localizer receiver has failed to switch from tail to nose antenna after glideslope capture. Accuracy of localizer steering is degraded. Yaw axis will disconnect if autoland mode is engaged.	Pilot visually monitors approach in the lateral axis. Continue approach at pilot's discretion, subject to the limitations in Section V.
AUTO TRIM FAULT	Indicates a discrepancy between stabilizer movement and autopilot trim command.	Hold control wheel in present position. Disengage the A/P. Retrim the airplane and re-engage the autopilot pitch axis. If the light comes on again, disengage the pitch axis while holding control column to prevent possible elevator transient.
AUTOLAND	Light is off at 500 feet radar altitude. Indicates autoland mode not selected or approach test has failed to complete monitoring checks.	Proceed with normal ILS approach procedures. Autoland is inoperative.

ENGINES.

Engine Oil System Failure.

Failure of the engine oil system can result in abnormally low oil pressure. This condition can lead to engine failure if not corrected. Oil temperature could increase during an oil system malfunction. If abnormally high oil pressure (10 PSI above normal pressure) is indicated after the oil temperature has stabilized, the engine should be shut down if continued operation is not necessary.

Low Oil Pressure.

If the engine low oil pressure light comes on, cross-check the applicable oil pressure gage to ascertain that the oil pressure is below the limit. If the oil pressure is below the limits, the engine should be shut down unless its operation is essential to maintain flight. If it is essential to continue operation of an engine experienceing oil starvation, the pilot should be aware of the possible results. Oil system starvation will result in accelerated bearing damage and eventual severe internal engine failure. The time interval

from a beginning of oil starvation to engine failure will vary widely, depending on bearing condition, bearing loads, and thrust setting. A rise in oil temperature, accompanied by a possible increase in engine vibration, is indicative of a bearing failure.

Note

Continuous engine windmilling with zero oil pressure due exclusively to loss of oil quantity will cause no engine damage.

Engine Oil Filter Differential Pressure Warning Light.

If the engine oil filter differential pressure light comes on, it indicates that the scavenge oil filter is approaching a blocked condition. Crosscheck the applicable oil pressure gage to ascertain that the oil pressure is within the normal operating range. If the oil pressure is not within the normal range the engine should be shut down unless its operation is essential to maintain flight. The applicable oil pressure gage should be periodically checked until the malfunction has been corrected. Continued engine operation with a blocked filter can result in a contaminated oil system. Under the contaminated condition, the likelihood exists of clogging internal oil screens and jets, resulting in loss of lubrication to bearings and seals. Consequences could be similar to those following the loss of oil pressure.

High Oil Temperature.

High temperature (pressure normal) can usually be reduced by advancing the throttle to increase fuel flow through the fuel-oil cooler. Excessive temperatures or significant variations between engines can warn the pilot in time to shut down the engine and prevent an oil system or engine failure.

FLIGHT CONTROL SYSTEM FAILURES.

WARNING

Except in an actual emergency, never remove all hydraulic power from any flight controls. Under no circumstances will the Flight Spoiler Sys A and Sys B Power switches be turned OFF simultaneously. To do so will allow all flight spoilers on the the wing to float up.

See 15-88

CAUTION

In the event hydraulic system 2 is not providing adequate pressure for elevator control and hydraulic system 3 pressure is normal, placing the Inbd Elevator Sys 3 hydraulic power switches to NORM and the Inbd Elevator Sys 2 hydraulic power switches to OFF should provide adequate pressure for elevator control. The elevator controls should be returned to the neutral position prior to switching from system 2 to system 3 to prevent abrupt elevator inputs and damage to the airplane.

Note

If one aileron will not uprig, or after uprigging it will not retrim to a faired condition, the operative trim should be selected and positioned to the same position as the inoperative trim.

Jammed Roll Control System.

The roll control system contains two interconnect rods, each equipped with a shear pin. One interconnect rod and shear pin connects the pilot's and copilot's forward quadrants. The other interconnect rod connects the pilot's and copilot's aft quadrant. If a jam occurs in either the pilot's or copilot's roll control system, sufficient force exerted at the control wheels will shear both pins, permitting use of the operable portion of the roll control system.

WARNING

Disengage the autopilot roll axis. If possible, reduce airspeed before shearing pins and always turn either control wheel toward the airplane centerline to minimize control overshoot and prevent over-stressing the airframe.

After shear out, exercise caution since the remaining one-wing roll system will have unsymmetrical characteristics.

If the right wing is the operable system, the copilot will also experience higher breakout forces and a very low force gradient. Over controlling may easily result.

Jammed Pitch Control System.

The pitch control system contains two interconnect rods, each equipped with a shear pin. One interconnect rod and shear pin connects the pilot's and copilot's forward quadrants. The other interconnect rod connects the pilot's and copilot's aft quadrants. If a jam occurs in either the pilot's or copilot's pitch control system, sufficient force exerted on the control columns will shear both pins permitting use of the operable pair of symmetric elevators.

WARNING

Disengage autopilot pitch axis. If possible, reduce airspeed and shut off hydraulic power to elevator systems 1 and 3. Trim as needed. Execute shear out with minimal overshoot to prevent excessive stress on the airframe.

Reactivate system 1 and outboard system 3. If pilot has control, force gradient will be low. If copilot has control, forces will be near normal. In either case, response to elevator commands will be reduced since either the inboard or outboard elevators will not be operable.

Jammed Directional Control System.

The pilot's and copilot's rudder pedals are connected by a common cable system to the upper and lower rudders. Interconnect rods and shear pins are not provided. If a jam occurs in the rudder cable system, the rudders may be controlled to 20 degrees either side of center by use of the Yaw Aug Man Trim controls on the flight augmentation panel. To obtain emergency rudder control, the yaw augmentation system must be engaged, and the guarded Yaw Aug Man Trim switch placed to ON. Rotating the Yaw Aug Man Trim knob then provides signals to the rudder servo valves to displace the rudders in the desired direction.

WARNING

Do not use the yaw augmentation manual trim for normal operation. This device provides up to 20 degrees of rudder deflection in approximately one-half second and by-passes the normal rudder stop system. Slowly apply the rudder necessary to control the airplane. Rapid rudder input may cause structural damage.

Jammed Feel Springs.

Each of the pitch, roll, and yaw control systems incorporate a feel spring which is equipped with a shear pin. If a feel spring jams, sufficient force on the affected controls will shear the pin, disconnecting the feel spring from the system. In the case of the pitch and roll systems, less force is required to shear the feel spring pin than is required to shear the interconnect rod pins.

WARNING

When any Flight Control Hydraulic Power switch is turned OFF or a flight control hydraulic sys off light comes on, airspeed is limited to no more than 350 KCAS or Mach 0.825.

Cable Tension Regulator Lockout.

It is possible for the cable tension regulators to lock out when control forces are changed abruptly. This can occur when the autopilot is disengaged while forces are being applied to a control surface or by abrupt movement of a flight control. Tension regulator lockout is evidenced by two to five inches of play in the affected control and a slack in the affected control cables. The slack will be less at lower altitudes and coordinated flight and landing can be safely made with the cable tension regulators locked out. However, applying steady pressure to both control cables aft of the tension regulator should release the tension regulator lockout. It is necessary to apply enough force to the cables to move the tension regulator past the point where it is locked out then release the cables equally and slowly. The cables then should be tight. If not, repeat the procedure.

WARNING

It is not recommended that the cable tension regulator be reset in flight unless a safe platform (i.e., bulk cargo) is available. A ladder is not considered adequate.

WARNING

Do not operate the autopilot with a cable tension regulator locked out.

FLIGHT CONTROL HYDRAULIC POWER FAILURE.

Note

The following flight control hydraulic power failure procedures are based on the assumption that a malfunction has occurred in a component and that the associated hydraulic power supply system(s) has not failed. For procedures to be used in the event of a total hydraulic system failure, refer to Hydraulic System Failure in this section.

Aileron Hydraulic Power Off Indication.

If an aileron hydraulic sys off light comes on, position the corresponding Aileron Hydraulic Power switch to OFF. If both hydraulic systems powering a single aileron have failed, or the corresponding switches are selected OFF, the aileron will float up and produce a mild roll in the direction of the failed or selected OFF aileron.

Rudder Hydraulic Power Off Indication.

If a rudder hydraulic sys off light comes on, position the corresponding Rudder Hydraulic Power switch to OFF. If both hydraulic systems powering a rudder have failed, and the corresponding switches are OFF, the rudder will float to an aerodynamic neutral position.

Should all hydraulic power be lost to one of the individual rudders, the Rudder Lim switch should be placed to MIN Q to obtain the maximum available rudder deflection from the remaining rudder.

WARNING

Use extreme caution when applying rudder inputs with the rudder stop system out of the normal configuration permitting more than the maximum allowable rudder deflection. More than the allowable rudder deflection could cause structural damage. Limit rudder input to that required to control the airplane.

Elevator Hydraulic Power Off Indication.

See 15-88

If an outboard elevator hydraulic sys off light comes on, place the corresponding elevator hydraulic power switch to OFF. If the inboard elevator sys 2 off light comes on, place Inbd Elevator Sys 2 hydraulic power switch to OFF and place both Inbd Elevator Sys 3 hydraulic power switch to NORM.

Elevator Feel Power Off Indication.

If an elevator feel sys off light comes on, place the associated Elevator Feel Hydraulic Power switch to OFF. The remaining elevator feel system will provide full elevator feel capability.

CAUTION

If both elevator feel systems are inoperative, use extreme caution while controlling pitch attitude. Structural damage could result from overcontrolling since the only force available is from the bob-weights, friction, and centering springs.

Rudder Stop System Failure.

If a rudder limiter light comes on, first check indicated airspeed. If below 153 KCAS, the light indicates that the rudder is limited to less than full travel. For this condition, place the Rudder Lim switch to MIN Q.

If between 153 KCAS and 238 KCAS, the light indicates that the rudder is either limited to 4 degrees travel or unlimited travel (35°). For this condition, slow the airplane to below 153 KCAS and check whether the light goes out. If it does, the rudder is unlimited in travel. If the light does not go out, the rudder is limited to 4 degrees travel. For this condition, place the Rudder Lim switch to MIN Q if required.

If airspeed is above 238 KCAS, the rudder limiter light indicates that the rudder stop system will not limit rudder travel to the 4 degree maximum allowable deflection.

add - See 15S-103

WARNING

Use extreme caution when applying rudder inputs with the rudder stop system out of the normal configuration permitting more than the maximum allowable rudder deflection. More than the allowable rudder deflection could cause structural damage. Limit rudder input to that required to control the airplane.

Pitch Trim Failure.

If a pitch trim failure is detected, disconnect both the normal and alternate pitch trim systems by depressing the Trim Disc button on the control wheel. The operating system may then be reset by selecting the proper system with the Pitch Trim Reset switch. The manual pitch trim levers (on both sides of the center console) shall be used in case both normal and alternate pitch trim systems are inoperative.

Runaway Pitch Trim.

If a runaway pitch trim is detected, immediately depress the Trim Disc button on the control wheel. This will disconnect both the normal and alternate pitch trim systems. Use the manual pitch trim levers to retrim the airplane. The normal and alternate pitch trim systems may then be reset, one at a time, watching closely for another runaway. If the faulty system is discovered, leave it disconnected for the remainder of the flight.

- Caution - See 15-88

Note

The manual pitch trim lever may be used to override a hydraulic runaway that was not disconnected by the Trim Disc button.

WARNING

A pitch trim runaway to the 12 degree nose up stop, in all flaps down configurations, will result in insufficient longitudinal control to prevent the airplane from entering a stall when the CG is aft of 33 percent MAC.

Flight Augmentation Failure.

The flight augmentation system is fail operative in that no single fault in a pitch, lateral, or yaw subsystem can disable that subsystem. In case of multiple fault, the subsystem will disengage. A single fault in a subsystem is indicated by the appropriate pitch, lateral, or yaw aug fault lights and the master caution lights. Complete failure of a subsystem will be indicated by the appropriate pitch, lateral, or yaw aug inop light and the master caution lights. The off light in the related flight augmentation control pushbutton switch will also come on with a complete failure of the subsystem. The master auto lights and appropriate autopilot annunciator lights will come on if the augmentation subsystem faults or becomes inoperative while the autopilot is engaged.

Yaw Augmentation Inoperative.

If the yaw augmentation system should fail inoperative, as indicated by the yaw aug inop light, limit rudder input to that necessary to control the airplane. Airspeed must be restricted to 300 KCAS/.825 Mach if the yaw augmentation remains faulted or inoperative. No abrupt rudder inputs or sideslip angles should be generated. Turn coordination is not provided and damping of the dutch roll is reduced. Without this turn coordination, the turn will not be coordinated and will require rudder input into the turn.

Note

Yaw augmentation manual trim (emergency rudder trim) and roll axis of the autopilot is not available when the yaw augmentation system is inoperative.

Lateral Augmentation Inoperative.

If the lateral augmentation system should fail inoperative, as indicated by the lateral aug inop light, spiral stability and rudder coordination will not be provided in steady turns. The yaw augmentation system will provide rudder deflection for turn entry coordination and damping of dutch roll.

Note

The roll axis of the autopilot is not available when the lateral augmentation system is inoperative.

Pitch Augmentation Inoperative.

The pitch axis of the autopilot is not available with the pitch augmentation inoperative.

Stallimiter System Failure.

If inadvertent shaker onset should occur during normal flight regimes where the airplane is not near the stall regime, immediately deactivate both stallimiter systems by placing the Stallimiter switches OFF. Determine which system has produced the malfunction by observing the stall lights and leave that system deactivated. Activate the good system for continued single protection in flight.

CADC Failures.

If the No. 1 or No. 2 CADC becomes inoperative, the operating status of the system receiving CADC inputs is tabulated below:

Note

If a CADC failure occurs, turn the related stallimiter system off.

SYSTEM	CADC	SYSTEM REMAINS OPERATING	SYSTEM USES OTHER CADC	SYSTEM PERFORMANCE DEGRADED	SYSTEM BECOMES INOPERATIVE	OTHER
AHRU NO. 1	1	X				9
NO. 2	2	X				12
Air Cond Control (L. System)	1			X		
(R. System)	2			X		
Auto Land — Lateral Axis	1 or 2	X				
Auto Land — Pitch Axis	1 or 2				X	
Autopilot	1 or 2	X		X	X	
Auto Throttle	1 or 2	X		X	X	10
CDPIR	1	X		X		
EMAC	2				X	
FDS NO. 1	1			X		2
NO. 2	2			X		2
Flight Augmentation	1 & 2			X		1
G/A Computer	1 or 2				X	3 11
IDNE — Pri Computer	1	X				4
IDNE — Aux Computer	2					
IFF	1	X		X		
Landing Gear Warning	1 or 2	X	X			5
MADAR	1	X		X		
Navigator's TAS Indicator	1 or 2	X	X			6
Rudder Limit Control	1 or 2	X	X			7
Stallimiter No. 1	1				X	8
No. 2	2				X	8
VSFI's - PLT's	1				X	
- CPLT's	2				X	13

1. Loss of one CADC will turn on the appropriate system fault light and transfer the system to a fixed gain.

2. Loss of valid pitch command signal when the go-around mode is selected causes the ADI pitch steering bar to retract from view.

3. Lack of agreement between CADC input signals will deactivate the go-around system.

4. Loss of either CADC will degrade the associated IDNE computer performance. Loss of both CADCs deactivates the Vert Nav mode.

(5) Loss of both CADCs deactivates the landing gear warning system.

(6) Loss of both CADCs results in loss of TAS.

(7) Loss of both CADCs results in loss of rudder limit control.

(8) Loss of both CADCs results in loss of the stallimiter system.

(9) On airplanes not modified by T.O. 1310, after IDNE failure the AHRU will switch to its associated CADC.

(10) In IAS and Mach Hold, operative CADC/VSFI provides normal performance.

(11) The Angle-of-Attack tape is operable.

(12) On airplanes not modified by T.O. 1310, loss of CADC No. 1 and the IMU will cause the No. 1 AHRU to degrade in heading as a result of no Coreolis correction. Vertical errors will build up in extended turns.

On airplanes not modified by T.O. 1310, loss of CADC No. 2 and the IMU will cause the No. 2 AHRU to degrade in heading as a result of no Coreolis correction. Vertical errors will build up in extended turns.

With the IMU operating, loss of either CADC will not effect the AHRUs. The CADC invalid light on the IDNE indicator panel will come on.

(13) Since the navigator's IAS and altimeter are pneumatic instruments and independent of the CADCs, loss of either CADC will not affect their operation.

PITOT-STATIC SYSTEM ISOLATION PROCEDURE.

If one of the pitot-static systems malfunctions or fails, the following tabulated data will allow the flight crew to determine which pitot-static system has malfunctioned or failed when the noted indications have occurred:

INDICATIONS	SYSTEM LOST	ACTION
CADC No. 1 outputs are erratic. Pilot's VSFI inoperative or warning flags show.	No. 1 pitot or No. 1 static	Check copilot's and navigator's IAS instruments for agreement to verify this condition. Place the CADC selector switch to CADC No. 2.
CADC No. 2 outputs are erratic. Copilot's VSFI inoperative or warning flags show.	No. 2 pitot or No. 2 static	Check pilot's and navigator's IAS instruments for agreement to verify this condition. Place the CADC selector switch to CADC No. 1.
Cabin differential pressure indicator reads lower than selected values. Indicator may read zero.	No. 4 static	Set pressurization system to regulate below maximum pressure of 8.3 PSI. Safety valves will prevent overpressurization.
Navigator's IAS indicator does not agree with pilot's and copilot's indicators.	No. 3 pitot	Disregard navigator's indicator.
Navigator's altimeter and IAS indicator do not agree with pilot's or copilot's indicators.	No. 3 static	Disregard navigator's indicator.
Flight recorder, MADAR recorder, and one variable feel unit acting erratically.	No. 4 pitot	Deactivate the malfunctioning units. VFU may not be noticeably affected if leakage is minor.

FLAP AND SLAT SYSTEM FAILURE.

Flap system malfunctions can result from loss of electrical power, loss of hydraulic power, or asymmetrical operation. For information on flap and slat operation after loss of hydraulic power, refer to Hydraulic System Failure, in this section.

Loss Of Electrical Power.

Loss of electrical power to the flaps and slats system will cause the slats to over extend and decouple and will also result in loss of flap asymmetry detection.

WARNING

When operating the flaps without asymmetrical protection, the flap handle should be moved in small increments to prevent an uncontrollable condition in the event of asymmetrical extension or retraction.

Asymmetrical Flap or Slats Indication.

If the flaps or slats stop before reaching the selected position during a normal extension or retraction cycle, check the appropriate asymmetry and brake on annunciator lights. If both lights are on, the associated asymmetry system has closed the solenoid operated shut-off valve and engaged the torque tube brakes of the system. The malfunction could be transient, therefore, a reset may be attempted. To reset the flaps or slats system, proceed as follows using the asymmetry detector control box located on the aft wing beam.

a. ASYMMETRY AND BRAKE LIGHTS ON:

(1) Place the affected Reset switch to ON and check if the asymmetry light goes off. If the asymmetry light does not go off, no further attempt should be made to reset the system. If the asymmetry light goes off, proceed as follows:

(2) Place the Slat Drive Disconnect switch to the DISC position (LE lights on only).

(3) Place the affected Reset switch and affected Brakes Release switch simultaneously to the ON position.

If the brakes on light goes off, accomplish the flap/slat re-synchronizing procedure, if required, and then normal flaps/slats operation may be resumed.

See 155-99

b. BRAKE LIGHT ON:

(1) Place the Slat Drive Disconnect switch to the DISC position (LE brake light on only).

(2) Place the affected Reset switch and affected Brakes Release switch simultaneously to the ON position.

If the brakes on light goes off, accomplish the flap/slat re-synchronizing procedure, if required, and normal flap/slats operation may be resumed. If the slat brake light does not go off after reset, the slats probably have decoupled and the slat drive disconnect switch shall be left in the DISC position.

Slat Drive Malfunctions.

Any time the le slat asymmetry and/or le slat brake on lights or the slat-flap sync light comes on and the slat system can not be reset, place the Slat Drive Disconnect switch in the DISC position.

If the slat drive mechanism should decouple from the flap drive system, as indicated by the le slat brake on light and/or flap/slat sync light coming on, or the Slat Drive Disconnect switch is placed in the DISC position, observe the speed limitations in Section V.

WARNING

If the slats should decouple in flight, no attempt will be made to recouple. A maintenance inspection is required after each decouple.

Slat-Flap Re-Synchronizing Procedure.

If the slats do not reach their fully retracted or extended position by the time the flaps reach their selected position and the slat brake on light is not on, one attempt to resynchronize the slats to the flaps may be accomplished as follows:

a. Flap and Slat Drive Switch - DISC

b. Flaps - RETRACTED

c. Flap and Slat Drive Switch - NORM

d. Flaps - EXTENDED

If the slats do not extend fully, place the Flap and Slat Drive switch to the DISC position and observe the speed limitations in Section V.

SPOILER RATIO SHIFTER FAILURE.

If either spoiler ratio shifter should fail in the flaps down configuration (60 degrees spoiler capability and 3 degrees uprig with flap up), a very mild and easily controllable roll in the direction of the failed shifter will result. Should this occur, place both Spoiler Ratio Shifter switches to the FLAPS UP position. Ensure that all spoilers move to the flaps up

position. If all the spoilers do not move to the flaps up position place both Spoiler Ratio Shifter switches to the FLAPS DOWN position and limit roll control to that necessary for safe control of the airplane. After extending the flaps prior to a landing, place both Spoiler Ratio Shifter switches to the FLAPS DOWN position.

WARNING

A spoiler deflection of 60 degrees at high airspeeds could cause structural damage.

If either spoiler ratio shifter should fail in the flaps up configuration (22.5 degrees spoiler capability and 0 degrees uprig with the flaps down), a very mild and easily controllable roll in the opposite direction of the failed shifter will result. Should this occur, place both Ratio Shifter switches to the FLAPS DOWN position. Ensure that all spoilers move to the flaps down position. If all the spoilers do not move to the flaps down position, place both Spoiler Ratio Shifter switches to FLAPS UP, and expect reduced roll capability during the landing pattern.

HYDRAULIC SYSTEM FAILURE.

Hydraulic system malfunctions can result from engine-driven pump failure, boost pump failure, system overpressure, total loss of system pressure, or partial loss of system flow rate.

CAUTION

Two or more MADAR printouts of excessive case drain flow from an engine-driven hydraulic pump, ATM-driven hydraulic pump, or a PTU, verifies the possibility of an impending failure. Conditions permitting, depressurize the corresponding hydraulic pump or system to preclude failure and subsequent contamination.

Engine Driven Pump Failure.

Failure of an engine driven pump will be indicated by the associated press low light on the flight engineer's hydraulic panel. If one pump fails, place the associated Hydraulic Pump switch to DEPRESS, and monitor the hydraulic quantity indicator.

If both engine driven pumps in a system fail, place both Hydraulic Pump switches to DEPRESS, and monitor the hydraulic quantity indicator. If fluid loss is not indicated, place the appropriate Power Transfer Unit switch to ON. Continue to monitor the hydraulic quantity indicators.

The appropriate hydraulic boost pump and ATM may be turned on to supplement PTU operation during landing gear and flap operation.

Hydraulic-Driven Boost Pump Failure.

If a hydraulic driven boost pump fails in hydraulic systems No. 1 or 4, turn on the electric-driven boost pump.

If a hydraulic driven boost pump fails in hydraulic systems No. 2 or 3, refer to Total Loss of Individual Hydraulic System Quantity.

Hydraulic System Overpressure.

If an overpressure (3,400 PSI) should occur on any of the hydraulic systems, do not depressurize either of the engine driven hydraulic pumps in the affected system as pump failure may occur with resultant fluid loss in the engine accessory section. In the event of hydraulic system overpressure, accomplish the following:

a. If mission permits, shut down the engine using the Fuel and Start Ignition switch. Do not depressurize the hydraulic pumps.

b. If the mission will not permit engine shutdown:

(1) Reduce power to the minimum required on the affected engine.

(2) Place the PTU switch to ON for the adjacent system and, if necessary, to further reduce the pressure in the affected system, depress one or both hydraulic pumps in the adjacent system as required. Monitor all systems for loss of fluid indications.

CAUTION

Do not depress the hydraulic pumps on an engine experiencing an overpressure condition.

(3) Monitor MADAR (if available) for system overtemperature indication. If overtemperature is experienced, system contamination may develop from fluid breakdown. Engine shutdown shall be reconsidered using the Fuel and Start Ignition switch. Do not depressurize the hydraulic pumps.

Total Loss of Individual Hydraulic System Pressure.

The following paragraphs describe the procedures to be followed in the event of total loss of individual hydraulic system pressure. Refer to figure 3-16 for additional systems affected.

HYDRAULIC POWER DISTRIBUTION

SYSTEM COMPONENTS	HYDRAULIC SYSTEM			
	1	2	3	4
No. 1 Thrust Reverser	X			
No. 2 Thrust Reverser		X		
No. 2 Thrust Reverser Emergency Retract	X			
No. 3 Thrust Reverser			X	
No. 3 Thrust Reverser Emergency Retract				X
No. 4 Thrust Reverser				X
Left APU Start Accumulator	X			
Right APU Start Accumulator				X
NLG Extension and Retraction	X			
NLG Steering	NORM			EMER
NLG Kneeling	X			
Aft MLG Extension and Retraction	X			
Aft MLG Rotation	NORM			ALT
Aft MLG Crosswind Positioning and Control Castering	X			
Fwd MLG Extension and Retraction				X
Fwd MLG Rotation	ALT			NORM
Fwd MLG Crosswind Positioning				X
MLG Brakes	ALT			NORM
Emergency Brake Accumulator				X
Aft MLG & NLG Kneeling	X			
Fwd MLG Kneeling				X
Left Aileron	X	X		
Right Aileron		X		X
LH & RH Flight Spoiler Panel No. 9	X	X		
LH & RH Flight Spoiler Panel No. 8	X		X	
LH & RH Flight Spoiler Panel No. 7		X	X	
LH & RH Flight Spoiler Panel No. 6			X	X
LH & RH Flight Spoiler Panel No. 5		X		X
Inboard Elevators		X	X	
Outboard Elevators	X	X	X	
Alternate Pitch Trim (Screw Actuator)	X			
Normal & Manual Pitch Trim (Nut Actuator)		X		
Variable Feel Unit	X			X

C5A-1-X3/3-184-1R

Figure 3-16. (Sheet 1 of 2)

SYSTEM COMPONENTS	HYDRAULIC SYSTEM			
	1	2	3	4
Flap Drive Motor	X			X
Upper Rudder	X		X	
Lower Rudder		X	X	
Left and Right Ground Spoiler Panels	X			X
Emergency Generator		X		
Air Refueling System				X
Aft Cargo Door and Ramp System	X			
Fwd Cargo Door and Ramp System				X
Crew Entrance Door and Ladder				X
Troop Compartment Stair Ladder	X			
High Pressure Pneumatic System (HPPS)				X
Ram Air Turbine		X		

C5A-1-X3/ -184-2R

Figure 3-16. (Sheet 2 of 2)

Loss of Hydraulic System No. 1 Pressure.

PROCEDURE.

a. Engine Driven Pumps - DEPRESS

b. PTU - ON

c. APU Iso Valve - AS REQUIRED

d. Sys No. 1 Hydraulic Boost Pump - AS REQUIRED

Turn on the hydraulic boost pump prior to turning on the ATM.

e. Sys No. 1 ATM - AS REQUIRED

System No. 1 ATM is not required during normal cruise operation, but shall be turned on during take-off and before landing to attain normal landing gear and flap retraction and extension times.

Loss of Hydraulic System No. 2 Pressure.

PROCEDURE.

a. Engine Driven Pumps - DEPRESS

b. PTUs - ON

Loss of Hydraulic System No. 3 Pressure.

PROCEDURE.

a. Engine Driven Pumps - DEPRESS

b. PTUs - ON

Loss of Hydraulic System No. 4 Pressure.

PROCEDURE.

a. Engine Driven Pumps - DEPRESS

b. PTU - ON

c. APU Iso Valve - AS REQUIRED

d. Sys No. 4 Hydraulic Boost Pump - AS REQUIRED

Turn on the hydraulic boost pump prior to turning on the ATM.

e. Sys No. 4 ATM - AS REQUIRED

System No. 4 ATM is not required during normal cruise operation but shall be turned on during take-off or before landing to attain normal landing gear and flap retraction and extension times.

Total Loss of Individual Hydraulic System Quantity.

The following paragraphs describe the procedures to be followed in the event of loss of an individual hydraulic system due to loss of fluid.

There is no noticeable degradation in longitudinal or lateral control available for landing due to loss of any single hydraulic system quantity; however, directional control available must be considered when the loss of fluid is from either systems 1, 2, or 3.

Loss of Hydraulic System No. 1 Quantity.

Note

On airplanes modified by T.O. 1387, loss of hydraulic system No. 1 fluid will cause loss of manual control of the secondary climb valves of the fuel tank inerting system.

PROCEDURE.

a Engine Driven Pumps - DEPRESS

b. PTU - OFF

c. Sys No. 1 ATM - OFF

d. Sys No. 1 Hydraulic Boost Pump - OFF

BEFORE LANDING.

Note

Since one of the two systems powering the flaps and slats is inoperative, allow approximately twice the normal time for flap and slat extension.

The crosswind positioning system and castering system are inoperative. The upper rudder is powered by only one system. Directional control will be marginal for crosswind landing with maximum crosswind components in the normal zone. Approach speeds may be increased up to 15 knots.

a. Lower the aft main gear and the nose gear using the procedures for Emergency Gear Extension Due to Loss of Hydraulic Pressure in this section.

b. Place the Nose Gear Steering switch to EMER.

After selecting emergency nose wheel steering, the flight engineer shall monitor the No. 4 hydraulic quantity gage for any loss of fluid. If a fluid loss is noted, the Nose Gear Steering switch should be returned to NORM and the landing accomplished without the use of nose wheel steering.

LANDING.

Normally do not exceed reverse idle except with the inboard engines due to loss of No. 1 thrust reverser.

Loss of Hydraulic System No. 2 Quantity.

PROCEDURES.

a. Engine Driven Pumps - DEPRESS

b. PTUs - OFF

c. RAT - RETRACT

Note

The lower rudder is powered by only one system. Directional control will be marginal for crosswind landing, without crosswind gear, with maximum crosswind components in the normal zone. Crosswind landing should be made with the crosswind gear, or approach speeds may be increased up to 15 knots.

LANDING.

Normally do not exceed reverse idle except with the outboard engines due to loss of No. 2 thrust reverser

Loss of Hydraulic System No. 3 Quantity.

PROCEDURES.

a Engine Driven Pumps - DEPRESS

b. PTUs - OFF

Note

The upper and lower rudders are powered by only one system. Directional control for crosswind landing, without crosswind gear, will be reduced. Allowable crosswinds for landing should be restricted to the normal crosswind landing zone. Approach speeds may be increased up to 15 knots.

LANDING.

Normally do not exceed reverse idle except with the outboard engines due to loss of No. 3 thrust reverser.

Loss of Hydraulic System No. 4 Quantity.

PROCEDURES.

a. Engine Driven Pumps - DEPRESS

b. PTU - OFF

c. Sys No. 4 ATM - OFF

d. Sys No. 4 Hydraulic Boost Pump - OFF

BEFORE LANDING.

Note

Since one of the two systems powering the flaps and slats is inoperative, allow approximately twice the normal time for the flaps and slat extension.

The crosswind positioning system is inoperative.

a. Lower the forward main gear using the procedures for Emergency Gear Extension Due to Loss of Hydraulic Pressure.

b. Place the Brake switch to ALT and check alternate brake pressure. Refer to Brake System Failure in this section.

LANDING.

Normally do not exceed reverse idle except with the inboard engines due to loss of No. 4 thrust reverser.

Total Loss of Multiple Hydraulic System Quantity.

The following paragraphs describe the affect of loss of multiple hydraulic systems due to loss of fluid and complement the procedures for total loss of individual hydraulic system quantity in this section.

Loss of Hydraulic Systems No. 1 and No. 2 Quantity.

Note

On airplanes modified by T.O. 1387, loss of hydraulic system No. 1 fluid will cause loss of manual control of the secondary climb valves of the fuel tank inerting system.

LANDING.

Stabilizer trim is inoperative.

If loss of all stabilizer trim functions is encountered during cruise, sufficient longitudinal control is available to land the airplane. The landing approach should be made at a shallow (3 degrees or less) glidepath angle and at a speed not less than 10 knots above charted speeds for normal landings.

The crosswind positioning system and castering system are inoperative. The upper and lower rudders are powered by only one system. Directional control for crosswind landing will be reduced. Allowable crosswinds for landing should be restricted to the normal crosswind landing zone. Approach speed may be increased up to 15 knots.

Spoiler panels 9 and the left aileron are unpowered and will float to aerodynamic neutral. The change in lateral control and maximum lift capability is negligible.

Loss of Hydraulic Systems No. 1 and No. 3 Quantity.

Note

On airplanes modified by T.O. 1387, loss of hydraulic system No. 1 fluid will cause loss of manual control of the secondary climb valves of the fuel tank inerting system.

LANDING.

The crosswind positioning system and castering system are inoperative. The upper rudder is unpowered and the lower rudder is powered by system No. 2 only. Directional control will be very limited. Landing with crosswind components exceeding 15 knots is not recommended. Increasing approach speed up to 15 knots will improve crosswind capability.

Spoiler panels 8 are unpowered and will float to aerodynamic neutral. The change in lateral control and maximum lift capability is negligible.

Loss of Hydraulic Systems No. 2 and No. 3 Quantity.

LANDING.

The inboard elevators are unpowered and will deflect down 3 to 5 degrees. Pitch control will be very limited; however, it is possible to maneuver and land the airplane if longitudinal trim is closely maintained and no large attitude changes are attempted. It will

be necessary to anticipate any trim requirements and lead the trim change with the stabilizer trim.

The lower rudder is unpowered and the upper rudder is powered by System No. 1 only. Directional control will be very limited. Landing, without the crosswind gear, with crosswind components exceeding 15 knots is not recommended. The crosswind gear should be used for landing in crosswinds, or the approach speed may be increased up to 15 knots.

Spoiler panel 7 will also be unpowered and will float to the aerodynamic neutral. The change in lateral control and maximum lift capability is negligible.

Loss of Hydraulic Systems No. 1 and No. 4 Quantity.

Note

On airplanes modified by T.O. 1387, loss of hydraulic system No. 1 fluid will cause loss of manual control of the secondary climb valves of the fuel tank inerting system.

CRUISE.

The variable feel unit in the pitch control system is inoperative. Relatively light control inputs may produce large pitch changes with corresponding changes in load factor or airspeed. Structural damage could result from over controlling since the only feel force available is from the bob-weights and friction.

LANDING.

Normal gear extension, brakes, alternate brakes, nose wheel steering, flaps, slats and ground spoilers will be inoperative.

Select emergency brakes just prior to landing.

Loss of Hydraulic Systems No. 2 and No. 4 Quantity.

LANDING.

Spoiler panels 5 and the right aileron are inoperative and will float to aerodynamic neutral. The change in lateral control and maximum lift capability is negligible.

Loss of Hydraulic Systems No. 3 and No. 4 Quantity.

LANDING.

Normally reverse thrust will not be used due to loss of No. 3 and 4 thrust reverser.

Spoiler panels 6 are unpowered and will float to aerodynamic neutral. The change in lateral control and maximum lift capability is negligible.

ELECTRICAL POWER SYSTEM FAILURE.

CSD Failure.

a. If one AC loadmeter fluctuates greater than one scale division relative to the other, or if the system frequency drops, determine if a CSD is causing the problem by checking the frequency of each CSD while holding each Generator Control switch, one at a time, in the TEST position. If the frequency is fluctuating greater than ±2 CPS about a mean frequency in the green range marking, with engine power stabilized, immediately disconnect the CSD.

b. If a generator out light comes on, check the frequency for the associated CSD while holding its Generator Control switch in TEST position. If the frequency is fluctuating greater than ±2 CPS, immediately disconnect the CSD.

CAUTION

Since a disconnected CSD cannot be reconnected in flight, do not disconnect more than two CSD's for the reasons explained in step a and b.

CAUTION

If a CSD disconnect is actuated because of a generator or CSD failure and the CSD does not disconnect, the pilot should shut down the engine in accordance with the Precautionary Engine Shutdown checklist, if in his judgement flight and mission conditions permit.

Note

If both inboard CSDs and either outboard CSD is disconnected, or the corresponding Generator Control switches are turned OFF, the ram air turbine will extend unless the Ram Air Turbine switch is placed in RETRACT.

CSD Fail Indication.

If a CSD fail light comes on, disconnect the CSD immediately. The light indicates CSD over temperature and/or low oil pressure.

Main Generator Failure.

If a gen fail light comes on, check the frequency and voltage of the associated generator. If fluctuation is observed, disconnect the CSD. In case a gen fail light comes on momentarily, then goes off, unaccompanied by a voltage or frequency fluctuation, operation of a generator may be continued, but the generator output must be monitored closely.

Main Generator System Malfunction.

The following procedure is intended as a guide in coping with generator system malfunctions.

DIFFERENTIAL FAULT.

When a gen out light comes on and remains on after the Generator Control switch is placed in the OFF position, no attempts to return the generator to the line need be made, as a differential fault has occurred.

CSD OVERSPEED.

CSD overspeed causes the generator to trip and lock out. Once the generator trips and locks out it cannot be reset until engine rotation stops; however, placing the Generator switch to OFF causes the gen out light to go off. The CSD and generator will automatically reset on the next engine start.

GENERATOR OUT LIGHT ON.

When a gen out light comes on, place the Generator Control switch to OFF. If the light then goes off, place the switch in the TEST position and observe the frequency and voltage. If the frequency is within eight cycles of the system frequency and if the voltage is within the normal operating range, place the switch in the ON position to return the generator to the line. If the generator trips again after being returned to operation, place the switch in the OFF position and do not make any further attempt to return the generator to operation. If the voltage is not within the normal operating range while the switch is in the TEST position, place the switch in the OFF position, and do not attempt to return the generator to the line. If the voltage is within the above limits and the frequency is not, hold the Generator Control switch in the TEST position for approximately one minute, and observe the frequency approximately one minute, and observe the frequency. If it stabilizes and returns within the above limits, position the switch to the ON position. If the generator trips again or if the frequency does not return within limits, no further attempt should be made to reset the generator.

BUS TIE OPEN.

If at any time the bus tie open light comes on and remains on, observe the voltage and frequency of the generator. If the voltage is within the normal operating range, and if frequency is stabilized within eight cycles of the system frequency, reset the bus tie contactor by positioning the Bus Tie switch to OPEN and then to NORM. If the bus tie open light comes on again, no further attempt need be made to reset. If the voltage and frequency are not within the above limits, the generator should be turned off, the Bus Tie switch placed to OPEN, and then to NORM.

Note

On airplanes not modified by T.O. 1310, it is possible to subject the MMR to a split bus condition. If this happens, the MMR antennas will lose phase reference and drive to their stops. Split bus operation can occur when either the No. 1 or No. 4 bus tie contactor is open. If a generator is malfunctioning, the procedure to ensure normal MMR operation is to isolate the affected generator by placing its generator switch to the OFF position and not by placing the corresponding bus tie switch to the OPEN position.

Four Main Generators Out.

In the event that four main generators go off the line accomplish the following:

PROCEDURE.

a. Fuel Isolation Valves - CLOSE

WARNING

Removal of electrical power from the fuel boost pumps while the fuel isolation valves are open will cause engine flameout if the auxiliary or extended range tanks are empty.

b. Instrument Power Switch - EMERG

c. Bus Tie Switches - OPEN

d. Generators - OFF

e. Generators - TEST

Place each Generator switch, in turn, to the TEST position and observe the respective voltage and frequency. If it is normal, place the Generator switch to the ON position to return the generator to the line.

If normal voltage and frequency is not obtained, place the Generator switch to the OFF position.

f. Bus Tie Switches - NORM

If one or more generators can be returned to the line, attempt to power all buses by closing the bus tie switches. If no generators can be returned to the line, proceed to the next step.

g. Either APU - START

Refer to APU inflight Starting Procedure in this section.

Start an APU and place its generator on the line.

h. Main Gen Out Lights - CHECKED

Observe the generator out lights. If they are on when the generator switch is in the OFF position, a differential fault trip has occurred.

Note

Above 20,000 feet, full generator output may not be available as indicated by the frequency meter showing a frequency decrease. Reduce the load as required to assure that the generator does not drop off the line.

WARNING

Do not accomplish steps i through n unless the generators went off the line after experiencing a lightning strike.

i. AC Load Center Electrical Equipment Access Cover - REMOVED

Remove the bottom access cover on the AC load center.

j. J-1 Connector on No. 1 Generator Control Unit - REMOVED.

Remove the J-1 connector from the No. 1 generator control unit.

k. Test Selector Knob - NORM

Rotate the Test Selector knob on the No. 1 generator control unit to the NORM position.

l. Test and DPR Reset Pushbutton - DEPRESS AND RELEASE

Depress and release the Test and DPR Reset pushbutton.

m. J-1 Connector - RE-INSTALLED

If the generator out light goes off, test for voltage and frequency. If the voltage and frequency is normal, place the No. 1 Generator switch to ON.

If a generator trips for the second time due to differential fault, do not attempt reset.

n. Steps j through m - REPEAT FOR NO. 2, 3 AND 4 GENERATOR CONTROL UNITS.

Loss of DC Power.

With the Inst Power switch in the NORM position, the emergency generator will automatically be turned on and supply DC power to the isolated and emergency DC buses and battery bus when the emergency bus power relay is deenergized. If normal DC power fails without a loss of AC power, the battery will supply the battery bus and emergency DC bus. Both the battery and ISO DC bus off lights will come on. Place the Inst Power switch to EMERG to turn on the emergency generator. This will prevent depletion of the battery and restore power to the ISO DC bus. Refer to DC Power Distribution in Section I.

Note

When the emergency generator is placed into operation, the navigation AC bus No. 1 will be de-energized.

Emergency Generator Operation.

With the Inst Power switch in the NORM position, the emergency generator will be turned on automatically if the emergency bus power relay is de-energized. The emergency generator will supply power to the isolated AC, isolated DC, avionics isolated AC, avionics isolated DC, emergency AC, emergency DC and battery buses.

If the emergency generator does not come on automatically in the event of a power failure, place the Inst Power switch in the EMERG position.

FUEL SYSTEM FAILURE.

The airplane fuel system design will permit normal engine operation after a single fuel system component failure or loss of one source of electrical power.

WARNING

Should any of the circuit breakers associated with the fuel system trip, they shall not be reset until the cause of the malfunction has been located and corrected. Failure to comply could result in a fire or explosion in the associated fuel tank. The critical fuel system circuit breakers that shall not be reset are found in the following table:

CIRCUIT BREAKER	POWER	BUS	FIGURE
Auto Refuel Control, Aux	28-VDC	Isol DC	1-58
Auto Refuel Control, Ext Range	28-VDC	Isol DC	1-58
Auto Refuel Control, Main	28-VDC	Isol DC	1-58
Fuel Quantity Ind			
Aux 1	115-VAC	Fwd Main AC No. 4	1-59
Aux 2	115-VAC	Fwd Main AC No. 3	1-59
Aux 3	115-VAC	Fwd Main AC No. 2	1-60
Aux 4	115-VAC	Fwd Main AC No. 1	1-60
Ext Range 1	115-VAC	Fwd Main AC No. 4	1-59
Ext Range 2	115-VAC	Fwd Main AC No. 3	1-59
Ext Range 3	115-VAC	Fwd Main AC No. 2	1-60
Ext Range 4	115-VAC	Fwd Main AC No. 1	1-60
Main 1	115-VAC	Fwd Main AC No. 4	1-59
Main 2	115-VAC	Fwd Main AC No. 3	1-59
Main 3	115-VAC	Fwd Main AC No. 2	1-60
Main 4	115-VAC	Fwd Main AC No. 1	1-60
Inboard Fuel Boost Pumps			
Aux 1	115-VAC	Aft Main AC No. 1	1-64
Aux 2	115-VAC	Aft Main AC No. 2	1-64
Aux 3	115-VAC	Aft Main AC No. 3	1-64
Aux 4	115-VAC	Aft Main AC No. 4	1-64
Ext Range 1	115-VAC	Aft Main AC No. 1	1-64
Ext Range 2	115-VAC	Aft Main AC No. 2	1-64
Ext Range 3	115-VAC	Aft Main AC No. 3	1-64
Ext Range 4	115-VAC	Aft Main AC No. 4	1-64
Main 1	115-VAC	Aft Main AC No. 1	1-64
Main 2	115-VAC	Aft Main AC No. 2	1-64
Main 3	115-VAC	Aft Main AC No. 3	1-64
Main 4	115-VAC	Aft Main AC No. 4	1-64
Outboard Fuel Boost Pumps			
Aux 1	115-VAC	Aft Main AC No. 4	1-64
Aux 2	115-VAC	Aft Main AC No. 3	1-64
Aux 3	115-VAC	Aft Main AC No. 2	1-64
Aux 4	115-VAC	Aft Main AC No. 1	1-64
Ext Range 1	115-VAC	Aft Main AC No. 4	1-64
Ext Range 2	115-VAC	Aft Main AC No. 3	1-64
Ext Range 3	115-VAC	Aft Main AC No. 2	1-64
Ext Range 4	115-VAC	Aft Main AC No. 1	1-64
Main 1	115-VAC	Aft Main AC No. 4	1-64
Main 2	115-VAC	Aft Main AC No. 3	1-64
Main 3	115-VAC	Aft Main AC No. 2	1-64
Main 4	115-VAC	Aft Main AC No. 1	1-64
Pri Fuel Level Valve			
Aux	115-VAC	Fwd Main AC No. 2	1-60
Ext Range	115-VAC	Fwd Main AC No. 2	1-60
Main	115-VAC	Fwd Main AC No. 2	1-60
Sec Fuel Level Valve			
Aux	115-VAC	Fwd Main AC No. 3	1-59
Ext Range	115-VAC	Fwd Main AC No. 3	1-59
Main	115-VAC	Fwd Main AC No. 3	1-59
Tank 1 Sump Low Level Warn	115-VAC	Fwd Main AC No. 1	1-60
Tank 4 Sump Low Level Warn	115-VAC	Fwd Main AC No. 4	1-59

Tank Boost Pump Failure.

Boost pump failure will be indicated by the corresponding pump press low light.

If the outboard boost pump in any tank fails, place its switch in the OFF position and turn on the inboard boost pump.

If both boost pumps in a main tank fail, fuel feed to the affected engine should be re-established as follows:

a. Turn on both fuel boost pumps for the adjacent main tank.

b. Open the crossfeed valve between the affected engine and the adjacent engine.

c. Turn on the boost pump for the applicable auxiliary or extended range tank of the affected engine.

d. Open the separation valve between the affected engine and the adjacent engine on the same wing.

e. Monitor fuel usage from the auxiliary or extended range tanks. If fuel is being used from one tank more rapidly than the other, turn its fuel boost pump off until the quantities are the same.

f. When fuel from the affected auxiliary and extended range tanks is exhausted, close the separation valve and the crossfeed valve and allow the affected engine to operate on suction feed from the main tank.

Filter Differential Pressure Light On.

If one of the filter differential pressure lights on the flight engineer's fuel management panel comes on, it indicates that the filter element is becoming clogged and that fuel bypassing is imminent on the related engine fuel filter. Clogging can be the result of icing or solid contaminants from the fuel. To eliminate icing as a possible cause of filter clogging, place the related Fuel Heater switch to the ON position for one minute. If the filter differential pressure light remains on after use of the fuel heater, continue engine operation and check the filter at the next station.

Engine-Driven Boost Pump Failure.

A pump out light indicates failure of the boost element engine-driven pump. A pump out light accompanied by normal engine operation indicates failure of the first stage of the engine-driven pump only. Normal engine operation can be maintained by using tank boost pump pressure to that engine.

Note

Fuel heater and fuel filter operation will be lost if the first stage of the engine-driven pump fails.

Sump Low Warning Light Indication.

The sump low warning lights should come on when fuel quantity in the applicable sub sump drops to approximately 1,600 pounds.

If a sump low warning light comes on, slow to 280 KCAS or Mach 0.825 (whichever is less) or below, turn on the other fuel boost pump, if not already on and assume a level attitude to allow the sump to refill. If the sump low warning light remains on, do not exceed 280 KCAS or M = 0.825 (whichever is less) for remainder of flight. A failure of this nature requires a mandatory safety of flight entry in the Form 781.

Note

If it is necessary to resume flight with a malfunctioning sump low warning light system, the system may be made safe by making it inoperative. With the sump low warning light system inoperative, the warning light will stay on and the airspeed limit of 280 KCAS or M=0.825 shall be observed. In addition, the No. 1 or the No. 4 main tank fuel quantity indicator will be inoperative.

Fuel Quantity Indicator Failure.

A fuel quantity indicator pointer driving off-scale in either direction, remaining at a fixed quantity on fuel tanks feeding directly to the engines, or fuel tanks transferring fuel, or moving eratically from a stabilized position, indicates a failure of the fuel indication system. A failure of this nature requires a mandatory safety of flight entry in the Form 781.

If a fuel quantity indicator fails, as indicated above, attempt to isolate the cause by opening the associated Pri Fuel Level Valve, Sec Fuel Level Valve and Auto Refuel Control circuit breakers, one at a time, in that sequence. If the condition is not corrected when a circuit breaker is opened, close that circuit breaker and open the next one in sequence. If the condition is not corrected after opening and closing all three circuit breakers, open the associated Fuel Quantity Ind circuit breaker and leave it open until the malfunction is corrected by a maintenance action. With a Fuel Quantity Ind or an Auto Refuel Control circuit breaker open, automatic control of fuel flow into that tank is not possible and the Auto Ref switch must be placed in the MAN position and fuel flow manually controlled to all tanks.

If a Pri Fuel Level Valve or Sec Fuel Level Valve circuit breaker is opened, fuel management will continue normally, however, no back-up capability will exist for automatic control of the fuel level control valve in that tank.

WARNING

A malfunctioning fuel quantity indicator may be caused by a system fault that could result in a fire or explosion if a second fault should occur.

WARNING

Do not remove fuel quantity indicators or disconnect any fuel quantity connector in flight. To do so could cause a fire or explosion.

Note

If it is necessary to resume flight with a malfunctioning fuel quantity indicator system, the system may be made safe by making it inoperative. Fuel quantity indicators will be inoperative when that system's feed-through connector plugs are disconnected. If the No. 1 or No. 4 main tank boundary connector plugs are disconnected, the sump low warning light system will be inoperative, the warning light will stay on and the airspeed limit of 280 KCAS or M=0.825 shall be observed.

Outboard Main Tank Low Indication.

If an outboard main tank low light comes on, reduce speed to 280 KCAS or Mach 0.825 (whichever is less), and check the extended range and auxiliary tanks for fuel. If any fuel is in these tanks, fuel mismanagement has occurred. Initiate proper fuel management procedures, and when normal fuel management is attained, resume speed. If the extended range tanks and auxiliary tanks are empty, fuel mismanagement has not occurred and the light may be disregarded.

Fuel Leaks.

Fuel leaks may result from ruptured fuel lines, faulty fittings, or the structural failure of a fuel tank. Fuel leaks may be indicated by abnormally high or low fuel flow, one or more press low lights, or a rapidly decreasing fuel quantity indication. The following causes should be considered when these indications are present:

High fuel flow can result from a leak between the flowmeter and fuel nozzles. A leak can be distinguished from a faulty fuel flow indication by an accompanying rapid quantity decrease.

Simultaneous press low light indications can result from a break any place in the system, simultaneous failure of boost pumps, or exhausted fuel supply.

Rapidly decreasing quantity indications can result from a break any place in the fuel system, a ruptured fuel tank, or a faulty indicating system.

A leak in the fuel system near an engine will usually require that the engine be shut down to prevent a fire. However, a leak in some parts of the fuel system may be isolated by manipulation of the crossfeed valves, separation valves, or boost pumps. The effects of a leak resulting from a ruptured fuel tank can be minimized by operating all engines from that tank or by transferring the fuel to other tanks. Refer to Section I for fuel management procedures.

Main Tank Fill Valve Failure.

Failure of a main tank fill valve in the closed position will be indicated by a decrease in main tank quantity while the auxiliary or extended range tank boost pumps are on. If such a failure occurs, follow the same procedure used for failure of two main tank boost pumps, then turn both boost pumps of the affected main tank off. After all fuel from the affected auxiliary and extended range tanks is used, turn the main tank boost pumps on.

Vent Fill Indication.

A vent fill indication will probably be caused by a faulty main tank fill valve. The faulty fill valve may be isolated by turning off all operating auxiliary or extended range boost pumps on the affected wing until the vent fill light goes off. Then turn the pumps back on, one at a time, checking the vent fill light as the main tank fills. When the faulty main tank fill valve is isolated, fuel from the affected auxiliary and extended range tanks may be fed to the affected engine by manual operation of affected tank boost pumps to maintain 18,000 to 23,000 pounds in the affected main tank.

FUEL TANK INERTING SYSTEM FAILURE.

Fuel Tank Pressure Warning (FSS Installed).

On airplanes modified by T.O. 1387, if a fuel tank pressure warning light comes on, proceed as follows:

PILOTS	FLIGHT ENGINEER
1. MAINTAIN LEVEL FLIGHT	1. WING VENT SWITCH ON – DEPRESSED
Discontinue climb or descent if practical.	Depress the illuminated Vent switch On push-button.

RADOME FAILURE.

Total loss of the nose radome due to severe hail, lightning strike, etc. does not have an adverse affect on airplane handling characteristics. However, turbulent airflow will be created along the fuselage which will affect the angle-of-attack and pitot static inputs.

Test conducted at a gross weight of 450,000 pounds, with the radome removed, revealed the following characteristics:

(1) The altimeter was useable and reasonably accurate.

(2) The angle-of-attack system was useable and reasonably accurate.

(3) The airspeed system indicated lower than actual at airspeeds greater than $1.3V_S$. At speeds of $1.3V_S$ and lower, the airspeed system was essentially correct.

(4) The airframe buffet level was uncomfortable above an indicated speed of 180 knots (actual speed of 210 KCAS).

The following systems should be turned off as soon as possible.

(a) Stallimiters

(b) Autopilot

(c) Go-Around Attitude Subsystem

(d) Auto Throttle Subsystem

After Take-Off/Climb.

In the event of total loss of nose radome immediately after take-off or during climb, proceed as follows:

a. Using the ADI as a reference, establish an 8 to 10 degree nose up attitude and use the radar altimeter to maintain a positive rate of climb while below 2,500 feet above the terrain until the flaps are retracted.

b. If at TRT, leave throttles set until gear and flaps are retracted.

c. Retract the landing gear.

d. When at a safe altitude above the terrain (1,000 feet as read on the radar altimeter) retract the flaps.

e. Set throttles at NRT.

f. Establish a 5 degree nose up climb and request a pace airplane.

g. Use pace airplane as necessary to call out airspeed and altitude during return and landing.

During Cruise.

In the event of total loss of nose radome during cruise, proceed as follows:

a. Leave throttles at power setting established prior to nose radome failure.

b. Maintain attitude on ADI that was being used prior to nose radome failure.

c. Request a pace airplane to verify airspeed and altitude during return and landing.

During Descent.

In the event of total loss of nose radome during descent, proceed as follows:

a. Retract gear and thrust reversers if extended.

b. Using the ADI, establish a 5 degree nose up attitude and request a pace airplane.

c. Set throttles to NRT.

d. Use pace airplane as necessary to call out airspeed and altitude during return and landing.

Landing.

The following procedure is recommended for landing the airplane with loss of nose radome.

a. Prior to entering landing pattern and using pace airplane to call out airspeed and altitude, extend gear and approach flaps.

b. Accomplish a normal landing pattern and extend landing flaps when on final approach. Have pace airplane call out airspeed and altitude through touchdown.

ANTI-SKID SYSTEM INOPERATIVE PROCEDURES.

WARNING

Operation with anti-skid inoperative is permitted only by major command approval and only when it is absolutely necessary to return the airplane to a base which has the capability to correct the malfunction. Once returned to a base which has the capability, it will not be dispatched until the discrepancy is totally corrected. Operation with anti-skid inoperative will only be permitted provided braking capability is available on all 24 wheels.

Gear retraction must be delayed for 2 minutes to allow for wheel spin-down before the gear retracts.

The following braking technique should be used with the anti-skid system inoperative: Apply brakes gradually until a decelerating force is felt and steady brake pedal pressure is maintained.

Flight tests have shown that the above technique, when used, resulted in no tire skid or tire damage.

Refer to T.O. 1C-5A-1-1 for performance data with the anti-skid system inoperative.

THREE ENGINE FERRY PROCEDURES.

A three engine ferry flight may become necessary in an emergency situation when the airplane must be evacuated out of a hazardous weather area or from a forward combat area. Three engine ferry flights will normally be made with a minimum flight crew, with minimum cargo for CG control and no passengers, and only sufficient fuel for the mission including an adequate reserve.

WARNING

Do not attempt a three-engine ferry without three operable PTUs, two operable ATMs, and at least one operable APU and operable rudder pedal steering.

WARNING

On 68304, 68307, 70167, 70168 and 70170 through 00460, not modified by T.O. 1334, do not uprig the ailerons.

WARNING

On 00461 and up and airplanes modified by T.O. 1334, center the ailerons by using the Aileron Centering Procedures in Section I.

FLIGHT CREW PROCEDURES:

Maintenance personnel will have prepared the inoperative engine for the ferry flight in accordance with T.O. 1C-5A-2-4 before the flight crew commences the aircrew visual inspection. The following checklist items will be performed in addition to those specified in Sections II and III:

Note

The airplane may be operated within the normal CG limits but the airplane should be loaded to the most practical forward center of gravity to improve nose wheel steering effectiveness.

Note

Standard fuel loading and management should be followed.

HYDRAULIC SYSTEM REVIEW.

The Hydraulic Power Distribution Chart (figure 3-16) shall be reviewed to determine inoperative systems. The effect of possible loss of a second engine and hydraulic systems should be considered.

BEFORE ELECTRICAL POWER-ON CHECK.

Prior to beginning the Before Interior Inspection checklist, accomplish the following:

Form 781: Check inoperative engine status. Ensure work reported in the maintenance briefing is recorded on the form. Maintenance personnel will make an entry stating that the inoperative engine is either immobilized or free to rotate in flight.

INTERIOR INSPECTION.

Ensure that the ailerons are centered by using the Aileron Centering Procedures in Section I.

BEFORE STARTING ENGINES.

For the inoperative engine:

a. Fuel and Start Ignition - STOP

b. Fire Handle - PULLED

c. Bleed Valve - CLOSED

d. Hydraulic Pumps - DEPRESS

e. Generator - OFF

f. Continuous Ignition Circuit Breaker - OPEN

g. Eng Start Ignition Circuit Breaker - OPEN

BEFORE TAKE-OFF.

a. Flaps - SET 40 PERCENT

b. Stab. Trim - SET

c. Rudder Trim - NEUTRAL

d. Rudder Lim Switch - MIN Q

e. Rudder Pedal Nose Wheel Steering - CHECKED

f. All Engine Bleeds - OPEN

g. Sys No. 1 and No. 4 Hydraulic Boost Pumps - ON

h. ATMs - ON

i. Air Cond Master Switch - OFF

TAKE-OFF.

Note

Three engine take-offs shall not be made in conditions for which 3-engine V_{MCG} exceeds 95 KCAS. This ensures that take-offs can be made in crosswinds on wet or dry runways, while assuring that directional control is available at 100 KCAS.

The three engine take-off technique is:

a. While holding brakes, set throttles of the symmetrical engines to at least take-off EPR. The throttles may be set to maximum allowable TIT to provide maximum thrust if desired. The copilot will back up the throttles and monitor power.

b. With hands off the nose steering wheel, assure that rudder pedal nose wheel steering is engaged.

c. Release brakes and smoothly apply power on asymmetric operating engine using rudder and rudder pedal nose wheel steering to maintain directional control. Use caution in attempting to apply power too rapidly, but TRT should be reached by 100 KCAS.

Note

The use of nose wheel steering should be avoided because it causes disengagement of rudder pedal nose wheel steering and the nose wheel will skip and provide less positive steering when more than 5 degrees of nose gear steering is utilized. The control column should be held in the full forward position to keep the nose wheels on the runway and maintain wings level. Banking into asymmetrical operating engine up to 5 degrees maximum on the ground will assist in directional control.

CAUTION

The loss of No. 1 hydraulic system will cause rudder pedal nose wheel steering to become inoperative. As an aid to directional control, it may be necessary to revert to emergency nose wheel steering.

Note

Wet or icy runway and aft CG will reduce nose wheel steering effectiveness and slower power application for the third engine may be required, although V_{MCG} is based on no nose wheel steering effectiveness and aft CG. The nose wheel steering will be more effective on a wet or icy runway or aft C.G. condition if forward pressure on the yoke is held up to 60 KCAS.

Note

If an inboard engine is inoperative, the take-off performance will be considerably improved.

d. The copilot will state "GO" at GO speed.

e. The pilot should make a normal rotation after the airplane reaches V_{ROT}. Rotation speed is the greater of the normal rotation speed or 100 KCAS. However, if runway available allows refusal speed to be equal to or greater than two-engine V_{MCA}, rotation should be delayed until two-engine V_{MCA} has been reached.

f. When safely airborne, the pilot will call "GEAR UP" and will continue with the standard climbout procedure. If obstacles exist, climb at V_{MCO} until the obstacles are cleared.

CAUTION

Gear and flaps should not be retracted simultaneously.

ENGINE FAILURE DURING TAKE-OFF.

Take-off Aborted.

If failure of an operative engine or any system emergency is experienced prior to reaching go speed (go speed for three-engine ferry is refusal speed), the take-off shall be aborted using standard procedures. If No. 1 hydraulic system fails, the copilot will select emergency NLG steering. If No. 4 hydraulic system fails, the copilot will select alternate brakes. If both No. 1 and No. 4 hydraulic systems fail, the copilot will select emergency brakes.

CAUTION

Use of the emergency brake system will invalidate V_R speed for runway available. Braking without anti-skid will require careful brake application to avoid blowing tires.

Take-off Continued.

If failure of an operable engine occurs after GO speed, the take-off should be continued in accordance with the procedures in Section III, under Engine Failure/Fire, Take-off Continued. When loss of No. 1 or No. 4 hydraulic system occurs after take-off, the landing gear should be kept in the extended position and the airplane landed as soon as practical.

CAUTION

Two-engine gear down performance data for enroute climb and cruise flight are not available. If an immediate landing leaving the gear extended is not possible and continuation of the ferry flight is required with the No. 1 or No. 4 hydraulic system inoperative, the pilot must make the decision to continue with all landing gear extended or retract the operable gear.

AFTER TAKE-OFF CLIMB.

The airplane should be accelerated as quickly as possible after take-off to the proper climbout speed. During acceleration, altitude should be increased only as terrain conditions require until climb speed is reached. Use standard climbout procedures.

AFTER GEAR RETRACTION.

a. ATMs - OFF

b. PTUs - ON

c. Air Cond Master Switch - AS REQUIRED

The remainder of the flight should be conducted in accordance with procedures for one or more engines inoperative, to be found in Section III.

ENGINE FAILURE DURING CLIMB.

Land as soon as practical. If the flight must be continued, accelerate to minimum flap retraction speed, retract flaps, continue acceleration. The best speed for climb is 175 KCAS.

CRUISE.

Maintain fuel balance within limits shown in Section V.

BEFORE LANDING.

The PTUs, hydraulic boost pumps, and ATMs should be on for landing.

SECTION IV

CREW DUTIES

Table of Contents

INTRODUCTION 4-1

INTERPHONE PROCEDURES AND PHRASEOLOGY 4-1

HIGH NOISE AREAS 4-2

PILOT 4-2

COPILOT 4-2

FLIGHT ENGINEER 4-2

NAVIGATOR 4-2

NORMAL PROCEDURES 4-3

LOADMASTER 4-37

PREFLIGHT 4-38

CARGO COMPARTMENT SEAT KIT INSTALLED 4-44

SCANNER 4-51

NORMAL PROCEDURES 4-52

INTRODUCTION

The purpose of this section is to supplement Section II. All crew duties not necessary for the operation of the airplane and engines are covered here. Crew members are responsible for operation of the equipment pertaining to their duties covered in other sections of the book in order that the mission may be carried out safely and with dispatch.

INTERPHONE PROCEDURES AND PHRASEOLOGY.

The navigator and flight engineer should monitor the primary radio during critical phases of flight, i.e., take-off, climb, descent, and landing. The copilot will announce over interphone which radio is primary, i.e., "Crew, V_1 primary." The loadmaster shall remain on interphone during engine start and ground operations.

To implement standard interphone procedures and phraseology, the following will be used during all ground and air operations:

NOMENCLATURE.

In the interest of standardization of crew member identification, the following terms will be used.

(1) Pilot: The occupant of the left seat in the cockpit, regardless of his position on the crew.

(2) Copilot: The occupant of the right seat in the cockpit, regardless of his position on the crew.

Note

Frequently, during training, the instructor pilot or the student pilot will occupy the right seat; regardless, he will be referred to as copilot.

(3) Navigator: The crew member seated at the navigator's station.

(4) Flight Engineer: The crew member seated at the flight engineer's station.

(5) Loadmaster: The crew member designated to accomplish loadmaster duties. If a compartment is not being utilized, it is not necessary to designate a crew member.

(6) Scanner: The crew member designated to accomplish interior and exterior scanner duties.

IDENTIFICATION.

The crew member or compartment being called will be identified first, followed by the identification of the crew member making the call. For Example: "Engineer from Pilot," "Troop compartment from Pilot."

SEQUENCE.

Crew members will always state the unit to be actuated, first, and then state action to be taken second, for example, gear - UP; flaps - APPROACH.

TERMINOLOGY.

In the interest of clarity and comprehension, the terminologies contained in this publication will be used as applicable.

ACKNOWLEDGEMENT.

Prior to execution, every command will be repeated by the receiver to insure proper understanding of the transmission. An exception to the above rule may be made during the final approach on a GCA letdown; here, the pilot may direct the other crew members not to acknowledge his commands in order to prevent interphone transmissions. In this situation, if the command is not clearly understood, the crew member will request that the command be repeated, stating "Say again"; the pilot will then repeat his original transmission. After initial contact has been established, it is not necessary during subsequent transmissions (in the same conversation) to identify the crew member being called.

HOT MIC PROCEDURE.

The use of HOT MIC, TALK, and LISTEN will be coordinated by the pilot.

When hot mic is used for takeoff and landing, the following procedures will be used:

1. HOT MIC will be selected from the LINEUP checklist to the AFTER TAKEOFF, CLIMB checklist, and from the BEFORE LANDING checklist to the AFTER LANDING checklist.

2. Both pilots should have their HOT MIC, TALK and LISTEN buttons pulled out. The pilot and copilot will have to use the interphone if they wish to talk to crew members other than the flight engineer or navigator. The crew, other than the pilot and copilot, will use normal interphone procedures during this portion of the flight.

HIGH NOISE AREAS.

WARNING

Use an ear protection device when in the cargo or environmental compartments any time equipment in these compartments is operating. Repeated exposure to the noise, without ear protection, could result in hearing impairment.

PILOT.

The pilot is responsible for the proper inspections and preparation of the airplane for the mission. Prior to engine start, he should brief the crew as to mission, duration of flight, emergency procedures, any unusual condition such as enroute weather and insure that each member has the proper personal equipment.

COPILOT.

The copilot will aid the pilot in any way as directed to accomplish the assigned mission. He must be thoroughly familiar with the Emergency Procedures as they pertain to the airplane and to his duties as copilot.

FLIGHT ENGINEER.

The flight engineer will perform inspections as required and report to the pilot the condition of the airplane. In flight, he will operate and monitor the various systems to insure the successful completion of the mission. He must be thoroughly familiar with the Emergency Procedures as they pertain to the airplane and to his duties.

NAVIGATOR.

The navigator will be responsible for the navigation of the airplane using all means available to accomplish the mission successfully. He must be thoroughly familiar with the navigator's challenge items in Section II and the Emergency Procedures as they pertain to this duties. Only those items identified by an asterisk (*) and items on which maintenance has been performed are required for thru-flight operation.

NORMAL PROCEDURES

The IDNE computers automatically post failure messages on the IDNE indicator panel. These failure messages should be recorded as they occur for maintenance analysis. After recording, the messages may be cleared by depressing the Keyboard Clr pushbutton. Continue IDNE operation as appropriate or refer to IDNE Failure Displays in Section I.

CAUTION

When the IDNE is turned off or switched to the DOP DR or AIR DATA DR mode, the airplane should be flown straight and level for at least five minutes to allow the IMU gyros to run down. Failure to do so may result in damage to the gyros.

CAUTION

If at any time more than one mode status is displayed in the IDNE mode status light, the panel dim control shall be rotated to MINIMUM. Failure to do so may result in damage to the lenses of the display windows.

INTERIOR INSPECTION

*1. Forms 781 - CHECKED

*2. Airplane Power - CHECKED (N, E)

*3. Navigator's Circuit Breaker Panels - CHECKED

*4. Navigator's Lights - CHECKED

Check circuit breakers on the Navigator's circuit breaker panels and on the Navigator's LIGHT CONTROL panel.

5. Celestial Tables, Sextant, Mount and Stand-CHECKED

a. HO 249 Tables, Vols I, II and III - AVAILABLE

b. Sextant Check in AFM 51-40 - ACCOMPLISHED

c. Sextant Mount Alignment - CHECKED

With zero degrees in azimuth counter, a sighting on the bullet should result in a bearing of 180.2 degrees.

d. Sextant Stand - AVAILABLE

*6. Oxygen System - CHECKED/100% AND OFF

*7. Visor and/or Kneeling Operation - COORDINATED WITH CREW (N, E, LM)

CAUTION

Coordination will be required among the Navigator, Flight Engineer and Loadmaster prior to opening the visor or kneeling the airplane. Movement of the airplane or visor during the first 5 minutes of alignment, or within 5 minutes after turning off the IDNE, may damage the IMU. However, if the airplane or visor is moved during the alignment, do not shutdown the IDNE until the movement has ceased.

Note

Movement of the airplane or visor during the remainder of IDNE alignment may result in unsatisfactory alignment and subsequent degradation of IDNE navigation. If the airplane or visor is moved, the alignment should be terminated when the movement has ceased, and then restarted or an air alignment accomplished.

*8. IDNE Panel Test - ACCOMPLISHED

a. Mode Select Switch - AS REQUIRED

b. Mode Enable Pushbutton - DEPRESSED

When the IDNE is initially turned on, the computers perform a brief self test and then; providing that the Comp Sel and Enter Display switches are set at the same position (PRI/AUX), the computers automatically display the following data which identifies the program tape and IMU constants tape that have been loaded into the computers:

DISPLAY	DATA FORMAT	DATA DEFINITION
A	OAA BB	Program Tape I. D.: AA = Mod. No. BB = Correction No.
B	OCC DD E	IMU Constants Tape I. D.: CC = Month DD = Day E = Year
C	OO FFF	FFF = IMU Serial No.

Rotation of any switch will clear the turn-on display which cannot be re-displayed until the next IDNE turn-on. The operator should check this display at turn-on to verify that the correct program tape and IMU constants tape are loaded into the computers. If no constants tape has been loaded, the "C" display will indicate 00000. If a FAIL 1 message is displayed during turn-on, remove it by depressing the Keyboard Clr pushbutton. If both computers are installed, recycle the system using the other computer. If the primary or auxiliary computer is not installed, the computer which displayed FAIL 1 may be useful in the Air Data Dead Reckoning mode.

Check to insure that the IMU serial number installed on the airplane and constants tape agree.

The mode status light will display STBY indicating that both computers are on and performing self tests. STBY will be seen only if the IMU is powered.

c. Panel Test Pushbutton - DEPRESSED AND HELD

Check that all computer controlled lights on both panels go off.

d. Panel Test Pushbutton - RELEASED

Check that all computer controlled lights come on for 10 seconds, go off for 10 seconds, and then return to the panel condition that existed prior to initiation of the test. Check the appropriate portion of the IDNE Panel Test Program Configuration table for the colors of the indicator lights.

If a pushbutton is depressed during the panel test, the test is terminated and must be initiated again to complete the test.

CAUTION

If the IMU malf light comes on simultaneously with a steady temp light, an out-of-tolerance temperature condition exists in the IMU. If this occurs during the alignment phase, the IDNE shall be switched to DOPPLER DR, AIR DATA DR, or OFF. If in a Nav Mode, the computer in control switches the IDNE to the DOPPLER DR or Air Data DR mode. This change in operation is displayed in the mode status light. The Mode switch shall then be set to the DOP DR or the AIR DATA DR position, as appropriate, and the Mode Enable pushbutton depressed. Power is now removed from the IMU.

Note

If the panel test indicates a malfunction in either panel, accomplish the IDNE Panel Test Failure Procedure, then rotate the Mode Select switch to OFF. Do not attempt to reinitialize the IDNE until the malfunction has been identified and corrected.

e. Caution Lights (Navigator's Light Panel) - TEST

(1) Pri and Aux Malf Status Lights - ON

(2) Pri and Aux Comp Sel Lights - ON

(3) Mode Status Light - ON

9. IDNE Panel Test Failure Procedure - ACCOMPLISHED (IF REQUIRED)

The following procedure signals the MADAR computer that the panel test did not work properly. Enter appropriate keyboard data for failed unit (999/998).

a. Enter Display Pushbutton - DEPRESSED

The computer in control will be displayed.

b. Enter Select Switch - PRES POS

c. Display Select Switch - SPECIAL DATA

d. Display (Norm/Altn) Pushbutton - DEPRESSED FOR NORM

e. Clr Pushbutton - DEPRESSED

The A through G data register lights will go out.

f. Indicator Panel Failure Keyboard Data Entry - 999

Check for 999 on G data register.

g. Ent Pushbutton - DEPRESSED

h. Clr Pushbutton - DEPRESSED

i. Control Panel Failure Keyboard Data Entry-998

Check 998 on G data register.

j. Ent Pushbutton - DEPRESSED

During the panel test failure procedure, the mode enable light in the pushbutton is on. Also, the keyboard lights in the pushbuttons, with the exception of the ent light, are on. The ent light goes off for approximately 5 seconds when depressed.

k. Mode Select Switch - AS REQUIRED

*10. IDNE Ground Alignment Procedures - ACCOMPLISHED (AS REQUIRED)

Note

The airplane or visor shall not be moved until the mode status window displays a nav mode or IMU power has been disabled for a minimum of 5 minutes. If the airplane or visor is moved prior to completion of the alignment, the ground alignment will have to be started again or an air alignment accomplished. Do not switch from external power to APU power or vice versa during IDNE operation. Power interruptions that occur, when transferring between the APU generators and external sources or vice versa, may shutdown the IDNE computer. If shutdown occurs, the IDNE may have to be reloaded and will have to be re-aligned.

a. Manual Ground Alignment - ACCOMPLISHED (AS REQUIRED)

Prior to normal operation of the IDNE, ground or air alignment of the system must be accomplished. Ground alignment takes approximately 25-28 minutes from the start of the procedure.

A manual ground alignment of the IDNE consists of the start-up and initial operation of the IMU while the airplane is on the ground and stationary.

Note

The Mode Select switch must not be rotated through OFF position. If it is, the IDNE will be turned off and the system must be realigned.

(1) Mode Select Switch - STBY

(2) Mode Enable Pushbutton - DEPRESSED

The mode light will display STBY (5 to 16 min.) indicating that both computers are on and performing self-tests.

(3) Comp Sel Pushbutton - DEPRESSED FOR PRI

Selection of the primary computer provides more capabilities when the airplane is in a navigation mode.

(4) Enter Display Pushbutton - DEPRESSED FOR COMPUTER IN COMMAND

Check the following:

(a) Malf Status Lights - OFF

(b) D-Mem Light - ON

The D-Mem light is illuminated with an amber light when the Doppler radar is in the signal acquisition (memory) mode. The Doppler radar requires 30 seconds of warmup time.

(c) Mode Light - ALIGN READY

The Mode light displays ALIGN READY 5 to 16 minutes after IMU is turned on.

(5) Mode Select Switch - GRD ALIGN

(6) Mode Enable Pushbutton - DEPRESSED

Check the following:

(a) Mode Light - COARSE ALIGN

(b) Comp Sel Pushbutton - COMPUTER IN CONTROL

The Comp Sel pushbutton displays computer in control with a green light.

(7) Enter Select Switch - PRES POS

(8) Display Select Switch - PRES SIT

(9) Display (Norm/Altn) Pushbutton - DEPRESSED FOR NORM

(10) Keyboard Cir Pushbutton - DEPRESSED

The "A" through "G" data registers will display nothing.

(11) Present Position Latitude - N/S XXXXX

This data appears in the "A" register as pres pos lat N/S XX XX. X'.

(12) Keyboard Ent Pushbutton - DEPRESSED

(13) Present Position Longitude - E/W XXXXXX

This data appears in the "B" register as pres pos lng E/W XXX XX. X'.

(14) Keyboard Ent Pushbutton - DEPRESSED

(15) Display Select Switch - SPECIAL DATA

(16) Present Position Altitude - XXXXX

This data appears unlabeled in the "D" register as XXXXX.

(17) Keyboard Ent Pushbutton - DEPRESSED

When coarse alignment is completed and present position data has been entered, the mode light will display FINE ALIGN. If coarse alignment is completed and present position has not been entered, the mode light will display ENTER PP.

Preflight or mission requirements permitting, the IMU may be left in the fine align mode for up to 190 minutes. Leaving the IMU in fine align for more than 190 minutes is of no additional benefit.

When the fine alignment is completed, the mode light displays NAV READY. If more time is available for a more accurate alignment of the inertial platform, leave the mode select Switch in the GRD ALIGN position.

(18) Mode Select Switch - INRTL DOP OR INRTL

Prior to taxi, rotate the mode select Switch to INRTL DOP or INRTL. The selection of INRTL DOP is preferable because it is a more accurate navigation mode. If the Doppler equipment has malfunctioned, the computer in control will automatically switch the IDNE to the inertial mode.

IDNE PANEL PROGRAM - OFF CONFIGURATIONS

Control Panel		Indicator Panel	
Light	Color	Light	Color
D - Menu	Dark	A. Blank (Dark)	
D - Malf	Dark	B. Blank	
IMU - Malf	Dark	C. Blank	
Temp	Dark	D. Blank	
Mode	Blank	E. Blank	
Track Steer	White	F. Blank	
Dest Steer	White	G. Blank	
Hdg Steer	White	Display NORM	Dark
		Display ALTN	Dark
If Vert Nav ON			
Vert Nav ON	Dark		
Vert Nav OFF	White		
Vert Nav Point	Dark		
Vert Nav Slope	White		
If Vert Nav OFF			
Vert Nav ON	Dark		
Vert Nav OFF	White		
Vert Nav Point	Dark		
Vert Nav Slope	Dark		
		Invalid Lights	
		Tacan 1 & 2	Dark
		RAD ALT 1 & 2	Dark
Term Nav	White	AHRU 1 & 2	Dark
Enter Display-Pri	Dark	CADC 1 & 2	Dark
Enter Display-Aux	White	LORAN	Dark
Fix Enable	White	MMR	Dark
Fix Reject	White	Vert Angle Error	Dark
Fix Override	White	Air Drop 10-Sec	Dark
Enter	Dark	Air Drop CARP	Dark
		Display Pri	Dark
Malf Status-Pri	Not Affected	Display Aux	Dark
Malf Status-Aux	Not Affected		
Comp Sel-Pri	Not Affected	The projection windows for A-G data registers are not affected.	
Comp Sel-Aux	Not Affected		

IDNE PANEL PROGRAM - ON CONFIGURATIONS

Control Panel		Indicator Panel	
Light	Color	Light	Color
D - Mem	Amber	A. N/S 888885	
D - Malf	Red	B. E/W 888888	
IMU - Malf	Red	C. 88888	
Temp	Red	D. 88888	
Mode	Indeterminate	E. 88888	
Track Steer	Green	F. 88888	
Dest. Steer	Green	G. 888	
Hdg. Steer	Green	Display NORM	White
		Display ALTN	White
If Vert Nav ON,			
Vert Nav ON	White		
Vert Nav OFF	Dark		
Vert Nav Point	White		
Vert Nav Slope	Dark		
If Vert Nav OFF,			
Vert Nav ON	White		
Vert Nav OFF	Dark	Invalid Lights	
Vert Nav Point	Dark	TACAN 1 & 2	Amber
Vert Nav Slope	Dark	RAD ALT 1 & 2	Amber
Term Nav	Green	AHRU 1 & 2	Amber
Enter Display-Pri	White	CADC 1 & 2	Amber
Enter Display-Aux	Dark	LORAN	Amber
Fix Enable	Green	MMR	Amber
Fix Reject	Amber	Vert Ang Error	Red
Fix Override	Green	Air Drop 10-Sec	White
Enter	White	Air Drop Carp	Green
		Display Pri	White
Malf Status-Pri	Not Affected	Display Aux	White
Malf Status-Aux	Not Affected		
Comp Sel-Pri	Not Affected	The projection windows for A-G data registers are not affected.	
Comp Sel-Aux	Not Affected		

(10) Mode Enable Pushbutton - DEPRESSED

Check the following:

(a) Mode Light - INRTL

With INRTL DOP selected, INRTL will be displayed in the mode status window until the airplane has accelerated to approximately 100 knots. The Doppler is operating but the IDNE computers are not processing the Doppler inputs to the computer.

At the end of ground alignment when the IDNE sequences from FINE ALIGN or NAV READY to INRTL and all the following conditions are met, the IMU heading will be initialized and its IMU heading validity discrete will go true; both AHRU's are valid, both AHRU's are in magnetic heading mode, both AHRU headings are within 5 degrees of each other, the A/D converter is valid and the IMU attitudes are valid.

b. Automatic Ground Alignment - ACCOMPLISHED AS REQUIRED

(1) Mode Select Switch - INRTL DOP

If the Doppler equipment has malfunctioned, select INRTL.

(2) Mode Enable Pushbutton - DEPRESSED

The mode light will display STBY indicating that both computers are on and performing self-test.

(3) Comp Sel Pushbutton - DEPRESSED FOR PRI

Selection of the primary computer provides more capability when the computer is in a navigation mode.

(4) Enter Display Pushbutton - DEPRESSED FOR COMPUTER IN COMMAND

Check the following:

(a) Display Light - PRI OR AUX.

(b) Mode Light - COARSE ALIGN

The mode light will display COARSE ALIGN 5 to 16 minutes after IMU is turned on.

(c) Comp Sel Pushbutton - COMPUTER IN CONTROL

The Comp Sel Pushbutton displays computer in control with a green light.

(5) Enter Select Switch - PRES POS

(6) Display Select Switch - PRES SIT

(7) Display (Norm/Altn) Pushbutton - DEPRESSED FOR NORM

(8) Keyboard Clr Pushbutton - DEPRESSED

The "A" through "G" data registers will display nothing.

Note

Present position data may be entered any time after the IDNE has been turned on. However, the data will not be accepted by the computer until coarse alignment has been completed.

(9) Present position Latitude - N/S XXXXX

This data appears in the "A" register as pres pos lat N/S XX°XX. X'.

(10) Keyboard Ent Pushbutton - DEPRESSED

(11) Present Position Longitude - E W XXXXXX

This data appears in the "B" register as pres pos lng E/W XXX°XX. X'.

(12) Keyboard Ent Pushbutton - DEPRESSED

(13) Display Select Switch - SPECIAL DATA

(14) Present Position Altitude - XXXXX

This data appears unlabeled in the "D" register as XXXXX.

(15) Keyboard Ent Pushbutton - DEPRESSED

11. Doppler DR and ADDR Mode Initialization - ACCOMPLISHED (IF REQUIRED)

This procedure will be accomplished when the operator does not have inertial inputs available for the computer.

a. MODE Select Switch - DOP DR OR ADDR

b. MODE ENABLE Pushbutton - DEPRESSED

The mode window will display ENTER PP. A 30-second warmup time is required for the Doppler radar.

c. Comp Sel Pushbutton - DEPRESSED FOR PRI

d. Enter Display Pushbutton - DEPRESSED FOR COMPUTER IN CONTROL

e. Enter Select Switch - PRES POS

f. Display Select Switch - PRES SIT

g. Display (Norm/Altn) Pushbutton - DEPRESSED FOR NORM

h. Clr Pushbutton - DEPRESSED

Note

Select a present position that is approximately the take-off point.

i. Present Position Latitude - N/S XXXXX

j. Ent Pushbutton - DEPRESSED

k. Present Position Longitude - E/W XXXXXX

l. Ent Pushbutton - DEPRESSED

m. Display Select Switch - SPECIAL DATA

n. Present Position Altitude - XXXXX

o. Ent Pushbutton - DEPRESSED

Note

Due to the mode degradation feature of the IDNE, enabling the DOP DR mode with the Doppler in memory will result in the IDNE stepping down to the air DR mode. This will be reflected in the mode status window.

*12. Doppler Indicator - TESTED

Depress the test button and check for the following:

a. Test Button Illuminates - TEST

b. Drift Angle Pointer - 15(±1) DEGREES LEFT DRIFT

c. Groundspeed Counter - 293(±3) KNOTS

d. Test Time - APPROXIMATELY 40 SECONDS

e. If Test Fails - NO GO FLAG APPEARS AND D-MALF LIGHT COMES ON

*13. AHRU's - CHECKED

a. Vertical Gyro Erection Switch - NORM

b. Hemisphere Selection Switch - AS REQUIRED

c. Latitude Set Indicator - PRESENT LAT SET

d. Mode Switch - COMPASS

Check for proper heading indications.

e. Mode Switch - DG

f. Nav Set Knob - ROTATED

Check for rotation of corresponding BDHI compass cards and HSIs.

g. Mode Switch - SLAVE

The synchronization indicator needle deflects from center.

h. Mode Switch - SYNC

This action should center the synchronization indicator needle.

i. Mode Switch - SLAVE

Repeat steps a through i for the other AHRU

During the AHRU check, the readings on the HSI's and BDHI's should be within the tolerances tabulated below:

SYSTEM	MAXIMUM DIFFERENCE
Pilot's HSI, Copilot's BDHI and Navigator's BDHI No. 1	3.5°
Pilot's and Copilot's HSI	4.0°
Pilot's HSI and Standby Compass	8.0°
Copilot's HSI, Pilot's BDHI and Navigator's BDHI No. 2	3.5°
Navigator's BDHI No. 1 and No. 2	3.0°

14. MMR - CHECKED (AS REQUIRED)

a. Function Switches - STBY

Allow the radar sets to warm up for at least two minutes.

CAUTION

Turning on the MMR while the visor is raised could cause damage to MMR components.

b. Controls - CHECKED

(1) Meter Switch - FREQ

(a) Manual Tune Knobs - CENTERED

(2) STC Knobs - CCW

(3) HDG SEL Knob - ADJUSTED

(4) K POL Switch - NORM

(5) Iso Echo Knob - CCW

(6) Rcvr Gain Knob - CCW

(7) Gnd Swp Knob - SR

(8) Cursor/MKR Switch - MKR

(9) Radar Switch - NAV

(10) Assign Pushbutton - X

(11) Brt Knob - CCW

(12) Vid Gain Knob - CCW

(13) Range (NMI) Switch - 60

(14) Var/Dly Knob - CW

(15) Mode Switch - WX

(16) Stab Switch - NORTH

(17) Bezel Light Knob - CW

c. Tune Mode Switch - MAN

Set the switch to MAN for the radar set test.

d. X-Radar Function Switch - TEST

e. Test Video - OPTIMIZED

Test inputs are introduced to the radar set for the inflight test and special synthetic, non-radiating test displays will be observed on the radar scope display when the Mode switch is rotated to all but BCN and SKE positions. Do not place both X and K in test at the same time.

Set up an optimum display of the test video. The test video appears as double bands. The upper band is bright and the lower band is dim. The video bands are repeated every 25 minutes. The quality of these video bands can be optimized by using RCVR gain control.

Check for the following displays:

(1) One solid band of video from a range of 15 to 20 miles.

(2) One solid band of video from a range of 20 to 25 miles.

f. BCN Mode - CHECKED (IF REQUIRED)

(1) Frequency - CHECKED

Prior to selecting BCN, move the frequency needle out of the black bar area of the meter indicator with the Freq Incr/Decr Switch.

(2) Mode Switch - BCN

The needle should return to the black bar area and the test video should disappear.

g. WX Mode - CHECKED

(1) Mode Switch - WX

Tune lower video band to low intensity using the receiver gain control.

(2) Iso Echo Knob - ROTATE FULLY CW

As the control is rotated, bright video bands disappear followed by the disappearance of the dim video bands.

(3) Iso Echo Knob - ROTATE FULLY CCW

h. Map Mode - CHECKED

(1) Mode Switch - MAP

(2) STC Amplitude Knob - ROTATE FULLY CW

(3) STC Range Knob - ROTATE FULLY CW

(4) RCVR Gain Knob - ROTATE FROM FULLY CW TO FULLY CCW (SLOWLY)

The test video should disappear from 15 to 20 miles then from 40 to 45 miles.

(5) STC Amplitude Knob - ROTATE FULLY CCW

(6) STC Range Knob - ROTATE FULLY CCW

(7) Range (NMI) Switch - RANGES CHECKED

(a) 2-30/1 - ONE VIDEO BAND (MINIMUM)/30 EQUALLY SPACED RANGE MARKERS (MINIMUM)

(b) 2-30/5 - ONE VIDEO BAND (MINIMUM)/5 EQUALLY SPACED RANGE MARKERS (MINIMUM)

(c) 60/10 - TWO VIDEO BANDS (MINIMUM)/5 EQUALLY SPACED RANGE MARKERS (MINIMUM)

(d) 120/20 - FOUR VIDEO BANDS (MINIMUM)/5 EQUALLY SPACED RANGE MARKERS (MINIMUM)

(e) 250/50 - TEN VIDEO BANDS (MINIMUM)/4 EQUALLY SPACED RANGE MARKERS (MINIMUM)

Rotate the switch to all ranges and check for continuity of display.

(f) 20/Dly - TEN VIDEO BANDS (NO RANGE MARKERS)

Rotate the Var/Dly knob over the full range. Count ten video bands.

i. Mode Switch - CM (IF REQUIRED)

The ground clearance is varied to check the clearance plane operation.

(1) Range (NMI) Switch - 2-30/1

(2) Clearance (X 100 Ft) Switch - MARKED 8 POSITION

(3) Clearance (x 100 Ft) Switch - MARKED 0 POSITION

Check for a solid band of video appearing between 6.25 and 7.75 miles on the radar scope. A reduction in set ground clearance will cause the band to become narrow until it disappears at zero set clearance. One-mile markers are provided on the display for clearance plane validation in the 2-30/1 position.

j. Mode Switch - RA (IF REQUIRED)

(1) Navigation Selector Panel - RADAR (PILOT/COPILOT)

(2) Pilot's MMR Mode Select Switch - REP

(3) Range (NMI) Switch - 2-30/5

(4) Var/Dly Knob - ROTATE FULLY CW

Check for two test video bands at 6-8 and 8-10 NMI. Adjust Rec Gain until the two bands are distinct and separate.

(5) Cursor/Mkr Switch - CURSOR

(6) Depr Ctr Switch - ON

(7) Scan Rate Switch - S

(8) Sector Width Knob - SET TO APPROXIMATELY 30 DEGREES

(9) Cursor Control Handle - CURSORS ADJUSTED

Adjust the range cursor into the first video band (6-8 NM). Center the azimuth cursor. If the drift input to the MMR is not valid, the no-go light will come on.

(10) Glide Slope (Deg) Switch - 5

(11) Range (NMI) Switch - EXP B

Adjust the range cursor to the middle of the first video band.

Note

Do not center the range cursor in the gap between the video displays. Since drift inputs are not used with the EXP B scan, the NO-GO light will go off, if on.

(12) ADIs - CHECKED

The vertical deviation indicators (VDIs) should be centered.

(13) Glide Slope (Deg) Switch - ROTATED

Rotate the switch from 5 to 4 degrees. The VDIs will move down to full scale deflection. Rotate the switch from 4 to 6 degrees. The VDIs will move to full scale up deflection.

Note

The VDI warning flags will be in view during the test.

(14) Tune Mode Switch - FA

The appropriate no-go and fail light will flicker.

(15) Function Switch - OPR

Momentarily place the switch to OPR and check the ADIs. The VDI warning flags should disappear from view and the no-go fail lights will stop flickering and go out.

WARNING

During the period of radiation when the Function switch is in OPR, the 77 foot hazardous radiation area must be free of electro-explosive devices and fuel.

(16) Function Switch - TEST

k. Mode Switch - SKE (IF REQUIRED)

(1) SKE Power Switch - ON

(2) Range (NMI) Switch - 2-30/5

(3) PPI Acft Ident Thumbwheels - 00

(4) Range Dim Control Knob - AS DESIRED

(5) Desired Range Thumbwheels - 28,000

(6) Own Acft Ident Thumbwheels - 01

(7) SKE Test Switch - TEST 1/HOLD

A two-minute warmup is required prior to the test.

(8) Pilot's and Copilot's Range Indicators - CHECKED

Check the pilot's and copilot's range indicators for the following:

(a) Green Shutter or Drift Out in No. 1 Window

(b) No Sync, Green Shutter or Ident Error in No. 6 Window

(c) 28,000 (±100) Feet in Range Counters

(9) MMR Indicators - CHECKED

Check the MMR Indicator for the following:

(a) Simulated targets shall appear at 095 (±5) degrees and 280 (±5) degrees.

Note

Opening the Doppler circuit breaker on the Avionics AC bus No. 1 with the Doppler drift indicator at zero drift for this portion of Test 1 will prevent shifting of the test video.

The minimum number of targets displayed in each row will be the 3- and 4-mile targets and 12-through 15-mile targets spaced at 1-mile intervals.

(b) Highlighting of targets at 4-mile intervals.

(10) ADI Fast/Slow Indicators - CHECKED

Check the ADI fast/slow indicators for the following:

(a) Fast/Slow Indicators - CENTERED (APPROXIMATELY)

(b) Increase and decrease the desired range control by 500 feet.

The indicators shall deflect full scale in the +F and -S directions respectively.

(11) Own Acft Ident Thumbwheels - 00

Observe both R/T fail in window No. 1

(12) SKE Test Switch - TEST 2/HOLD

(a) If the system is in synchronization and the switch is held for 10 seconds, the no sync light will come on.

(b) The PPI display will disappear.

(13) Own Aircraft Identification Number - SET

(14) Flight Code - SET

(15) PPI Aircraft Identification Number - SET

(16) Track Aircraft Identification Number - SET

(17) Desired Range - SET

l. Tune Mode Switch - AFC

m. X-Radar Function Switch - OFF

n. Steps c through l for K-Radar - ACCOMPLISHED

o. K-Radar Function Switch - OFF

15. LORAN - CHECKED (AS REQUIRED)

a. Function Selector Switch - PRR

The search and next step alarm lights should come on.

b. Display Test Pushbutton - DEPRESSED

Depress the display test pushbutton and check that the time diff-microsec displays 00000.0 and all the alarm lights come on, the alarm lights go off and the time diff-microsec displays 34952.5, the time diff-microsec then displays 00000.0. The letters A and B should be displayed in the time diff-microsec readout.

c. Basic and Specific PRR's - SET

d. Initiate Pushbutton - DEPRESSED

Depress the initiate pushbutton after the next step alarm light comes on.

e. Function Switch - ATD

Rotate the function switch when the next step alarm light comes on.

f. Preset TD For Slave A - SET

The preset TD must be within 1000 microseconds below the actual TD.

Note

If an estimated reading is 13,999; 13 must be set in.

g. Initiate Pushbutton - DEPRESSED

h. Function Switch - BTD

Rotate the function switch when the next step alarm light comes on.

i. Preset TD for Slave B - SET

The preset TD must be within 1000 microseconds below the actual TD.

Note

If an estimated reading is 65,999; 65 must be set in.

j. Initiate Pushbutton - DEPRESSED

k. Function Switch - TRACK

Rotate the function switch to TRACK when the next step alarm light comes on.

Note

The first LORAN self-test procedure can be accomplished at this time starting with step l and m.

l. PRR Mode Switches - TST AND O (IF REQUIRED)

Note

The receiver self test is only required when the airplane is outside of the LORAN C coverage area.

m. Initiate Pushbutton - DEPRESSED

If the receiver malfunctions, the no go light comes on. If the receiver is operating properly, the next step light comes on. (Repeat steps c through k.) If the receiver malfunctions, the no-go light comes on.

If the no go alarm light comes on, ensure that the program tape is installed and aligned in the LORAN receiver and the tape compartment door is closed. Reprogram the tape as follows:

(1) Initial Program Loading Pushbutton - DEPRESSED

Remove the screw cap on the bottom of the receiver and depress the pushbutton.

(2) Pushbutton and Amber Lights - ON

Check for illumination of the pushbutton and amber lights.

(3) Amber Light Cycle - CHECKED

After approximately 20 seconds, the amber light should cycle off then on indicating that the tape has run through the receiver and is starting over again.

(4) Pushbutton and Amber Lights - OFF

After approximately 30-40 seconds, the pushbutton light should go off, then the amber light should go off.

(5) No Go Alarm Light - OFF

If the no go light goes off, continue with the LORAN checkout. If the no go light remains on, repeat steps (1) through (4). If the no go light is still on, the LORAN receiver has malfunctioned.

n. Repeat steps c through k.

o. Initiate Pushbutton - DEPRESS

The SEARCH alarm light comes on while the receiver is searching for the LORAN signals. After approximately 2-6 minutes, the search light goes off and the time difference numbers will alternately appear in the time diff - microsec readout for both master to slave-A delay and master to slave-B delay. These displays indicate that the receiver is tracking the LORAN signal.

Immediately following initial signal acquisition, as indicated by appearance of time difference displays, various alarm lamps may come on. After a setting period of approximately fifteen minutes, all alarm lamps should go off. If the envl error alarm lamp comes on during normal tracking conditions, the envelope servo should be actuated to permit the receiver to re-acquire the proper tracking point on the RF pulse. This may be accomplished by setting the PRR/Mode thumbwheel switches to ENV-ON and depressing the Initiate pushbutton. After the receiver has corrected to the proper tracking point, the alarm lamp goes off and the envelope servo is automatically turned off.

If the airplane is operating beyond normal groundwave range, skywave signals can be utilized for appropriate position fixing. If operation is from skywave signals and automatic re-acquisition to groundwave signals (when available) is not desired, position the PRR/Mode thumbwheel switch to SKY-ON and depress the Initiate pushbutton. Under these conditions the gw avail and/or next step alarm lights will come on when groundwaves are detected; however, the receiver will continue to track the skywaves. If SKY-ON is not initiated, the receiver will automatically re-acquire and track the groundwave as soon as it is detected.

Note

The second LORAN self-test procedure can be accomplished any time during the track mode of operation by placing the PRR Mode Switch to TST/O and depressing the initiate pushbutton.

If the test is successful, the receiver automatically returns to the tracking operation.

Note

Power transients may cause the LORAN to recycle. If recycle occurs, a loss of signal acquisition will result requiring the operator to re-program the set.

16. EMAC - CHECKED

a. Test Values - MANUALLY INSERTED

(1) Mode - OPTIMUM

(2) Engine - 4 ENG

(3) EPR - EPR AUTO

(4) Cargo Weight - 125,000 POUNDS

(5) Operating Weight - 325,000 POUNDS

(6) Reserve Fuel Weight - 50,000 POUNDS

(7) Total Fuel Weight - 200,000 POUNDS

(8) Average Winds - T000

b. Altitude Select Knob - DEPRESSED

c. Specific Range Adjust Knob - DEPRESSED

d. Mach Correction Knob - DEPRESSED

e. Static Temperature Knob - DEPRESSED

f. Self-Test Pushbutton - DEPRESSED/TEST LIGHT ON

Depress the self test pushbutton and check that the test light comes on followed by the read light.

g. Specific Range Adjust Knob - 1.00

h. Test Values - CHECKED

Check that the following test values are displayed:

(1) Pressure Altitude - 4900 to 5100

(2) Optimum Altitude - 26275 to 27348

(3) Programmed Fuel Time - 11.27 to 11.73

On airplanes modified by T.O. 1575, the Programmed Fuel Time display will be between 10.0 and 13.0.

(4) Current Fuel Time - 10.80 to 11.24

(5) Range Remaining - 4688 to 4879

(6) Static Temperature - +4.1 to +6.1

(7) Total Fuel Weight - Decreasing 500 Pounds Per Minute

(8) Mach Command - 0.48 to 0.53

(9) EPR Limit - 4.34 to 4.66

(10) Total Temp - -13 to -19

i. Self-Test Pushbutton - DEPRESSED

j. Mon Test Pushbutton - DEPRESS AND HOLD

Check the following displays for failure flags or lights:

(1) Optimum Altitude Flag - In View

(2) Pressure Altitude Flag - In View

(3) Total Fuel Weight Flag - In View

(4) Programmed Fuel Time Flag - In View

(5) Current Fuel Time Flag - In View

(6) Range Remaining Flag - In View

(7) Static Temperature Flag - In View

(8) EPR Fail Light - On

(9) EMAC Fail Light - On

Note

On airplanes not modified by T.O. 1575, if the IDNE is on, the EMAC fail light will come on every other monitor test.

On depressing the Mon Test pushbutton, error voltages are injected into the failure monitor to cause the displays indicated above.

k. Mon Test Pushbutton - RELEASED

l. Mon Test Pushbutton - DEPRESS AND HOLD

On depressing the Mon Test pushbutton again, error voltages of the opposite polarity are injected into the failure monitor to cause the displays indicated in step j. above.

Note

On airplanes not modified by T.O. 1575, if the IDNE is on, the EMAC fail light will come on every other monitor test.

m. Mon Test Pushbutton - RELEASED

n. Specific Range Adjust Knob - DEPRESSED

*17. EMAC - PROGRAMMED

a. EPR Select Switch - EPR MANUAL

b. Engine Select Switch - 4 ENGINE

c. Mode Select Switch - DESIRED MODE

d. Cargo Weight - INSERTED

Insert the total weight of cargo aboard the airplane.

e. Operating Weight - INSERTED

Insert the basic airplane operating weight.

f. Total Fuel Weight - INSERTED

Insert the total weight of fuel aboard the airplane, including reserve fuel.

g. Reserve Fuel Weight - INSERTED

Insert weight of reserve fuel desired at destination.

h. Average Wind - INSERTED

Insert the forecast wind factor for the mission.

The value must be either a headwind or tailwind component.

i. Static Temperature - AS REQUIRED

Manually set in ambient temperature.

18. Rendezvous Radar - CHECKED (IF REQUIRED)

a. Power Selector Switch - STBY/TEST LIGHT ON

Allow two minutes for warm up time.

b. Code Selector Switches - CHECKED/ OBSERVE LIGHTS

c. Rv Bcn Intercom Switch - PULLED OUT

d. Power Selector Switch - ON

e. Test Pushbutton - DEPRESSED

If the TEST light comes on, but the audio tone is not heard, a malfunction or failure exists in the control panel. If no tone is heard, and the TEST light does not come on, a malfunction or failure exists in the Radar Beacon set.

f. Power Selector Switch - OFF

*19. IDNE Destination Points Data Entry Procedure - ACCOMPLISHED (IF REQUIRED)

A total of 13 destination points may be stored in the computer. The DP's must be numbered sequentially. The destination and track steering programs advance the previous DP number by one to get the next DP number. If the DP being set in is a landing DP and an RAL is to be accomplished, then vertical navigation data must be set in and entered into the program. (Refer to Steps 20 and 21.)

a. Enter Display Pushbutton - DEPRESSED FOR COMPUTER IN CONTROL

The display light should display PRI or AUX.

b. Enter Select Switch - DEST

c. Display Select Switch - DEST

d. Display (Norm/Altn) Pushbutton - DEPRESSED FOR NORM

e. Keyboard clr Pushbutton - DEPRESSED

The "A" through "G" data registers will display nothing.

f. DP Number - XX0

This number appears in the "D" register as dest no. 00XX0.

g. Keyboard Ent Pushbutton - DEPRESSED

h. DP Latitude - N/S XXXXX

This data appears in the "A" register as dest lat N/S XX°XX.X'.

i. Keyboard Ent Pushbutton - DEPRESSED

j. DP Longitude - E/W XXXXXX

This data appears in the "B" register as dest lng E/W XXX°XX.X'.

k. Keyboard Ent Pushbutton - DEPRESSED

l. Display (Norm/Altn) Pushbutton - DEPRESSED FOR ALTN

m. Planned Fuel Time Remaining at DP - XXX

Set in the planned fuel time remaining at the DP in hours and tenths of hours. This data appears in the "C" data register as fuel t hrs 00XX.X.

n. Keyboard Ent Pushbutton - DEPRESSED

Note

After the last DP is reached, the system will go to heading hold. The DP numbers can be redefined and recalled if more than 13 DP's are required. If DP 1 is recalled, the IDNE will again automatically sequence through to the last DP.

*20. IDNE Last Destination Point Number Data Entry Procedure - ACCOMPLISHED (IF REQUIRED)

a. Enter Display Pushbutton - DEPRESSED FOR COMPUTER IN CONTROL.

The display light should display PRI or AUX.

b. Enter Select Switch - DEST

c. Display Select Switch - DEST

d. Display (Norm/Altn) Pushbutton - DEPRESSED FOR NORM

e. Keyboard Clr Pushbutton - DEPRESSED

The "A" through "G" data registers will display nothing.

f. Last Destination Point - XX-

The minus sign means that XX is the last destination point. This data is not part of the flight plan, but is used to control the accessing of flight plan data. It will appear on the "D" register as DEST NO. 00XX-. The operator must make note of this since the minus sign will not appear during callup routines.

g. Keyboard Ent Pushbutton - DEPRESSED

*21. IDNE Vertical Navigation Data Entry Procedure - ACCOMPLISHED (IF REQUIRED)

a. Enter Display Pushbutton - DEPRESSED FOR PRI

b. Enter Select Switch - DEST

c. Display Select Switch - VERT NAV

d. Display (Norm/Altn) Pushbutton - DEPRESSED FOR NORM

e. Keyboard Clr Pushbutton - DEPRESSED

The "A" through "G" data registers should display nothing.

f. Destination Number - XX1 or XX0

The "G" data register should display the destination data XX1 or XX0.

g. Keyboard Ent Pushbutton - DEPRESSED

h. Ascent or Descent Angle - +/-X.X

The "C" data register should display the required angle as 000X.X or 00-X.X.

i. Keyboard Ent Pushbutton - DEPRESSED

j. Required DP Altitude - XXXXX

The "E" data register should display the required DP altitudes as XXXXX.

k. Keyboard Ent Pushbutton - DEPRESSED

l. Display (Norm/Altn) Pushbutton - DEPRESSED FOR ALTN

m. Flare Bearing - XXXX

The "D" data register should display the bearing to flare as 0XXX.X.

Note

For RAL, the flare bearing is entered as the magnetic bearing of the runway.

n. Keyboard Ent Pushbutton - DEPRESSED

*22. IDNE Fix Point Coordinate Data Entry Procedures - ACCOMPLISHED (AS REQUIRED)

A total of 15 fix points may be stored in the computer.

a. IDNE Radar Fix Point Coordinates Data Entry Procedures - ACCOMPLISHED (IF REQUIRED)

(1) Enter Display Pushbutton - DEPRESSED FOR COMPUTER IN COMMAND

The display light should display computer in command.

(2) Enter Select Switch - RADAR

(3) Display Select Switch - FIX DATA

(4) Display (Norm/Altn) Pushbutton - DEPRESSED FOR NORM

(5) Keyboard Clr Pushbutton - DEPRESSED

The "A" through "G" registers will display nothing.

(6) Radar Fix Point Number - XX0

This data appears in the "G" register as fix no. XX0.

(7) Keyboard Ent Pushbutton - DEPRESSED

(8) Radar Fix Point Latitude - N S XXXXX

This data appears in the "A" register as fix pt lat N/S XX°XX.X'.

(9) Keyboard Ent Pushbutton - DEPRESSED

(10) Radar Fix Point Longitude - E/W XXXXXX

This data appears in the "B" register as fix pt lng E/W XXX°XX.X'.

(11) Keyboard Ent Pushbutton - DEPRESSED

(12) Radar Fix Point Terrain Altitude - XXXXX

This data appears in the "C" register as terr alt - FT XXXXX.

(13) Keyboard Ent Pushbutton - DEPRESSED

(14) Radar Fix Point Variance Code - XXX

This data appears in the "F" register as fix type 00XXX.

The variance code is a function of the Geodetic accuracy of the chart from which the fix point coordinates are taken. Use only those variance codes listed below.

Limits of Uncertainty	Variance Code
0 to 600 Feet	001
0 to 6000 Feet	010
0 to 5 Nautical Miles	050

(15) Keyboard Ent Pushbutton - DEPRESSED

The "A" through "G" registers display the radar fix point data.

b. IDNE TACAN Fix Point Coordinates Data Entry Procedure - ACCOMPLISHED (IF REQUIRED)

(1) Enter Display Pushbutton - DEPRESSED FOR PRI

The auxiliary computer cannot be used for taking TACAN fixes. The display light should display pri.

(2) Enter Select Switch - TACAN

(3) Display Select Switch - FIX DATA

(4) Display (Norm/Altn) Pushbutton - DEPRESSED FOR NORM

(5) Keyboard Clr Pushbutton - DEPRESSED

The "A" through "G" registers will display nothing.

(6) TACAN Fix Point Number - XX0

This data appears in the "G" register as fix no. XX0.

(7) Keyboard Ent Pushbutton - DEPRESSED

(8) TACAN Fix Point Latitude - N/S XXX-XX

This data appears in the "A" register as fix pt lat N/S XX°XX.X'.

(9) Keyboard Ent Pushbutton - DEPRESSED

(10) TACAN Fix Point Longitude - E/W XXXXXX

This data appears in the "B" register as fix pt lng E/W XXX°XX.X'.

(11) Keyboard Ent Pushbutton - DEPRESSED

(12) TACAN Fix Point Terrain Altitude - XXXXX

This data appears in the "C" register as terr alt - ft XXXXX.

(13) Keyboard Ent Pushbutton - DEPRESSED

(14) TACAN Fix Point Channel - XXX

This data appears in the "D" data register as ch no. 00XXX.

(15) Keyboard Ent Pushbutton - DEPRESSED

Note

TACAN fixing can be used only when the station is below 70 degrees latitude due to magnetic variation storage limitations.

c. IDNE LORAN Fix Point Coordinates Data Entry Procedure - ACCOMPLISHED (IF REQUIRED)

(1) Enter Display Pushbutton - DEPRESSED FOR PRI

The auxiliary computer cannot be used for taking LORAN fixes. The display light should display pri.

(2) Enter Select Switch - LORAN

(3) Display Select Switch - FIX DATA

(4) Display (Norm/Altn) Pushbutton - DEPRESSED FOR NORM

(5) Keyboard Clr Pushbutton - DEPRESSED

The "A" through "G" registers will display nothing.

(6) LORAN Fix Point Number of Slave Station - XX0

This data appears in the "G" register as fix no. XX0.

(7) Keyboard Ent Pushbutton - DEPRESSED

(8) LORAN Fix Point Latitude - N/S XXXXX

This data appears in the "A" register as fix pt lat N/S XX°XX.X'.

(9) Keyboard Ent Pushbutton - DEPRESSED

(10) LORAN Fix Point Longitude - E/W XXXXXX

This data appears in the "B" register as fix pt lng E/W XXX°XX.X'.

(11) Keyboard Ent Pushbutton - DEPRESSED

(12) LORAN Slave Stations Microseconds Time Delay - XXXXX

This data appears in the "E" data register t-delay M secs XXXXX.

(13) Keyboard Ent Pushbutton - DEPRESSED

(14) Display (Norm/Altn) Pushbutton - DEPRESSED FOR ALTN

(15) LORAN Slave Station Mili-Microseconds Time Delay - XXX

This data appears in the "E" data register as t-delay Mμ secs - 00XXX.

(16) Keyboard Ent Pushbutton - DEPRESSED

Repeat steps (4) through (16) for the other slave stations to be used and the master station. The fix point numbers assigned will be used to prefix the station in LORAN fixing. For LORAN master station enter 00000 and 000 for microsecond and milli-micro-second time delays.

d. IDNE Celestial Fix Point Coordinates Data Entry Procedures - ACCOMPLISHED (IF REQUIRED)

The initialization of this program is accomplished by the operator once prior to using the data for the first time. The navigator will insert initial values and rate of change for the sun, moon, and planet position, GHA of Aries, Time and a time start mark.

(1) Enter Display Pushbutton - DEPRESSED FOR PRI

The display light should display PRI.

(2) Enter Select Switch - CELST DATA

(3) Display Select Switch - SPECIAL DATA

(4) Display (Norm/Altn) Pushbutton - DEPRESSED FOR NORM

Note

If a planet, the moon, or the sun is to be used, proceed to the next step, otherwise proceed to step (21).

Note

Parallex in altitude and semi-diameter (Pin A) corrections must be applied to the height observed (Ho).

(5) Keyboard Clr Pushbutton - DEPRESSED

The "A" through "G" registers should display nothing.

(6) Celestial Body Code Number - 0X or XX

This number appears in the "G" data register as 00X or 0XX.

The celestial body code numbers are as follows:

Stars	1-57	Sun	62
Saturn	58	Moon	63
Jupiter	59	GHA/Aries	64
Mars	60	GMT Data	65
Venus	61		

(7) Keyboard Ent Pushbutton - DEPRESSED

(8) Celestial Body Declination Rate per Hour - N/S 0XXXX

N/S denotes direction of rate.

This data appears in the "A" register as N/S 0X°XX.X'.

(9) Keyboard Ent Pushbutton - DEPRESSED

(10) Celestial Body Declination for Selected GMT-±XXXX. Use a plus (+) for North declination and a minus (-) for South declination.

This data appears in the "C" register as 0/-XX°XX'.

(11) Keyboard Ent Pushbutton - DEPRESSED

(12) Celestial Body GHA Rate per Hour - +XXXXX

This data appears in the "B" register as W 0XX°XX.X'. Ignore the W display. A negative value is never entered.

(13) Keyboard Ent Pushbutton - DEPRESSED

(14) Celestial Body GHA for Selected GMT - XXXXX

This data appears in the "D" register as XXX°XX'.

(15) Keyboard Ent Pushbutton - DEPRESSED

(16) Repeat steps (5) through (15) until the celestial data for the Sun, Moon, and other planets to be used is entered.

(17) Enter Display Pushbutton - DEPRESSED FOR PRI

The display light should display PRI.

(18) Enter Select Switch - CELST DATA

(19) Display Select Switch - SPECIAL DATA

(20) Display (Norm/Altn) Pushbutton - DEPRESSED FOR NORM

(21) Keyboard Clr Pushbutton - DEPRESSED

The "A" through "G" registers should display nothing.

Note

The present Star Data Epoch date is 1973.

(22) GHA of Aries Code Number - 64.

This number appears in the "G" register as 064.

(23) Keyboard Ent Pushbutton - DEPRESSED

(24) GHA of Aries - XXXXX

This data appears in the "D" register as XXX°XX'.

(25) Keyboard Ent Pushbutton - DEPRESSED

(26) Keyboard Clr Pushbutton - DEPRESSED

(27) GMT Data Code Number - 65

This number appears in the "G" register as 065.

(28) Keyboard Ent Pushbutton - DEPRESSED

(29) Start GMT Data in Hours - XX

This data appears in the "C" register as 000XX.

(30) Ent Pushbutton - DEPRESSED

(31) Start GMT Data in Minutes and Seconds - XXXX

This data appears in the "D" register as XX0XX.

(32) Keyboard Ent Pushbutton - DEPRESSED

Depress the Keyboard Ent pushbutton when the actual GMT is equal to the GMT entered in steps (29) and (31).

23. IDNE CARP Parameters Data Entry Procedures - ACCOMPLISHED (IF REQUIRED)

a. Enter Display Pushbutton - DEPRESSED FOR COMPUTER IN CONTROL

The display light should display PRI or AUX.

b. Enter Select Switch - AIR DROP

c. Display Select Switch - DROP DATA

d. Display (Norm/Altn) Pushbutton - DEPRESSED FOR NORM

e. Keyboard Clr Pushbutton - DEPRESSED

The "A" through "G" registers will display nothing.

f. Aimpoint Number - XX0

This number appears in the "G" register as drop no. XX0.

g. Keyboard Ent Pushbutton - DEPRESSED

h. Aimpoint Latitude - N/S XXXXX

This data appears in the "A" register as aim pt lat N/S XX°XX.X'.

i. Keyboard Ent Pushbutton - DEPRESSED

j. Aimpoint Longitude - E/W XXXXXX

This data appears in the "B" register as aim pt lng E/W XXX°XX.X'.

k. Keyboard Ent Pushbutton - DEPRESSED

l. Aimpoint to Point of Impact Distance - XXXXX

This data appears in the "C" register as ap-dz dst - nmi XX.XXX.

m. Keyboard Ent Pushbutton - DEPRESSED

n. Aimpoint to Point of Impact Bearing - XXXXX

This data appears in the "D" register as ap-dz-brg XXX°XX'.

o. Keyboard Ent Pushbutton - DEPRESSED

p. Parachute Time Delay - XXXX

This data appears in the "E" register as pch dly sec 0XX.XX.

q. Keyboard Ent Pushbutton - DEPRESSED

r. Parachute Fall Rate - XXXXX

This data appears in the "F" register as fall rt ft sec XXX.XX.

s. Keyboard Ent Pushbutton - DEPRESSED

t. Display (Norm/Altn) Pushbutton - DEPRESSED FOR ALTN

The "A", "B", and "G" registers retain their data.

u. Drop Zone Desired Approach True Course - XXXX

This data appears in the "C" register as aprch course 0XXX.X°.

v. Keyboard Ent Pushbutton - DEPRESSED

The remaining air drop parameters are entered into the IDNE computers with the Special Aimpoint Data procedure that follows:

24. IDNE Special Aimpoint Data Entry Procedure - ACCOMPLISHED (IF REQUIRED)

This procedure supplements the CARP parameters procedure. It allows the capability of inserting the additional required aimpoint data.

a. Enter Display Pushbutton - DEPRESSED FOR COMPUTER IN CONTROL

The display light should display PRI or AUX.

b. Enter Select Switch - AIR DROP

c. Display Select Switch - SPECIAL DATA

d. Display (Norm/Altn) Switch - DEPRESSED FOR NORM

e. Keyboard Clr Pushbutton - DEPRESSED

The "A" through "G" data registers will display nothing.

f. Aimpoint Number - XX0

This data appears in the "G" register as XX0. This aimpoint number is the same as the one for the CARP parameters procedure.

g. Keyboard Ent Pushbutton - DEPRESSED

h. Ballistic Drop Vertical Distance in Feet - XXX

This data appears in the "C" register as 00XXX.

i. Keyboard Ent Pushbutton - DEPRESSED

j. Drop Zone Length in Yards - XXXXX

This data appears in the "D" register, as XXXXX.

k. Keyboard Ent Pushbutton - DEPRESSED

l. Forward Travel Time in Seconds and Tenths - XXX

This data appears in the "E" register as 00XX X.

m. Keyboard Ent Pushbutton - DEPRESSED

n. Point of Impact Altitude in Feet - XXXXX

This data appears in the "F" register as XXXXX.

o. Keyboard Ent Pushbutton - DEPRESSED

p. Display (Norm/Altn) Pushbutton - DEPRESSED FOR ALTN

The "A" through "F" registers will display nothing and the "G" register retains the aimpoint number.

q. Aimpoint Terrain Altitude - XXXXX

This data appears in the "E" register as XXXXX.

Note

Do not enter a negative (i.e. below sea level) altitude. To do so, will result in an erroneous CARP altitude update.

r. Keyboard Ent Pushbutton - DEPRESSED

BEFORE STARTING ENGINES.

1. ADS Panel - SAFE
2. Oxygen - 100%/ON
3. Crew Start Report - "NAV READY" (N)

BEFORE TAXI.

1. Safety Belt and Shoulder Harness - FASTENED
2. IDNE Mode Select Switch - DESIRED MODE

Note

The airplane must not be moved until the mode status window displays an operating mode or IMU power has been disabled for a minimum of 5 minutes.

3. IDNE Land or Sea Operation - ACCOMPLISHED (AS REQUIRED)

To obtain the proper Doppler performance on over-water flights, it will be necessary to notify the IDNE that the system is operating over water so that allowances will be made for water surface motion due to waves and current. Sea operation should be selected at least two minutes prior to departure over water. Land operation should be selected at least two minutes after reaching land. Land operation is automatically selected when the IDNE is turned on.

CAUTION

Large navigation errors may result if the IDNE is operated in the inertial Doppler mode during overwater flight without selecting sea operation.

To notify the IDNE, accomplish the following:

a. Display (Norm/Altn) Pushbutton - NORM

b. Enter Select Switch - PRES POS

c. Display Select Switch - SPECIAL DATA

d. Keyboard Clr Pushbutton - DEPRESSED

e. Keyboard 221 or 222 - ENTERED

Enter 221 for land or 222 for sea.

f. Keyboard Ent Pushbutton - DEPRESSED

g. Land or Sea Operation - DISPLAYED

(1) Display (Norm/Altn) Pushbutton - NORM

(2) Enter Select Switch - PRES POS

(3) Display Select Switch - DR NAV

(4) Keyboard Clr Pushbutton - DEPRESSED

(5) Keyboard Ent Pushbutton - DEPRESSED

(6) Display (Norm/Altn) Pushbutton - ALTN

The "D" data register will display L or S XXX.X. The L or S corresponds to the commanded Kalman weighting for land or sea.

When the operator has selected the inertial Doppler mode of navigation, the IDNE computers are continually conducting reasonableness tests by comparing Doppler measured groundspeed and drift angle with the IMU measured groundspeed and drift angle. When this comparison fails the reasonableness test, the MODE status indicator will display INERT and the Doppler data is rejected. When the reasonableness test again passes, the MODE status indicator will display INERT DOP and the data will be processed by the Kalman filter.

When the computer determines that a problem may exist in the Doppler radar, it will command a self-test. This situation should be considered normal.

4. MMR Function Selector Switches - STBY

5. IDNE Mode Status - "STATE MODE" (N)

The MODE status indicator must display INRTL before the copilot can accomplish the HAMS check.

6. Crew Taxi Report - "NAV READY" (N)

TAXI.

1. AHRU's and BDHI's - CHECKED

Check for proper operation during turns.

BEFORE TAKE-OFF.

1. MMR Function Selector Switches - OPR

WARNING

Exercise extreme caution when placing the MMR Function Selector switches to "OPR" in a congested area. Electro-explosive devices and fuel are susceptible to ignition.

2. IDNE - CHECKED

Check present position data

3. IDNE Desired Steering Mode - ENABLED

Note

The IDNE cannot track steer to DP 1.

a. IDNE Heading Steer Data Entry Procedure - ACCOMPLISHED (IF REQUIRED)

(1) Enter Display Switch - DEPRESSED FOR COMPUTER IN CONTROL

The Display light should display PRI or AUX.

(2) Enter Select Switch - PRES POS

(3) Display Select Switch - PRES SIT

(4) Display (Norm/Altn) Pushbutton - DEPRESSED FOR ALTN

(5) Keyboard Clr Pushbutton - DEPRESSED

The first digit in the "E" data register will display "0"

(6) True Heading - XXXX

Set in the desired TH as XXXX.

The "E" register should display A/C HDG 0XXX.X.

(7) Keyboard Ent Pushbutton - DEPRESSED

(8) Hdg Steer Pushbutton - DEPRESSED

(9) Mode Enable Pushbutton - DEPRESSED

The light in the HDG STEER pushbutton should turn green to acknowledge the above action and remain green until either the track steer or dest steer mode is selected.

b. IDNE Destination Steer Data Entry Procedure - ACCOMPLISHED (IF REQUIRED)

(1) Enter Display Pushbutton - DEPRESSED FOR COMPUTER IN CONTROL

(2) Enter Select Switch - PRES POS

(3) Display Select Switch - DEST

(4) Display (Norm/Altn) Pushbutton - DEPRESSED FOR NORM

(5) Keyboard Clr Pushbutton - DEPRESSED

The "A" through "G" registers should display nothing.

(6) Destination Point - XX0

Set in the desired destination point on the Keyboard as XX0. The "D" register should display dest No. 00XX0.

(7) Keyboard Ent Pushbutton - DEPRESSED

The "A" through "G" registers should display the destination point data.

(8) Dest Steer Pushbutton - DEPRESSED

(9) Mode Enable Pushbutton - DEPRESSED

The light in the DEST STEER pushbutton should turn green to acknowledge the above action and remain green until either the track steer or heading steer mode is selected.

c. IDNE Track Steer Data Entry Procedure - ACCOMPLISHED (IF REQUIRED)

(1) Enter Display Pushbutton - DEPRESSED FOR COMPUTER IN CONTROL

(2) Enter Select Switch - PRES POS

(3) Display Select Switch - DEST

(4) Display (Norm/Altn) Pushbutton - DEPRESSED FOR NORM

(5) Keyboard Clr Pushbutton - DEPRESSED

The "A" through "G" registers should display nothing.

(6) Destination Point - XXO

Set in the desired destination point for track steering through the keyboard as XXO. The "D" register should display dest No. OOXXO.

(7) Keyboard Ent Pushbutton - DEPRESSED

The "A" through "G" registers should display the destination point data.

(8) Track Steer Pushbutton - DEPRESSED

(9) Mode Enable Pushbutton - DEPRESSED

The light in the TRACK STEER pushbutton should turn green to acknowledge the above action and remain green until either the destination steer or heading steer mode is selected or the designated last destination point is reached.

4. Altimeters - "STATE SETTING AND ALTIMETER READING" (CP, P, N)

5. Crew Take-off Report - "NAV READY" (N)

TAKE-OFF.

1. Takeoff Time - Record

AFTER TAKE-OFF, CLIMB.

1. Departure and Climb - MONITOR

2. IDNE Altitude Correction Procedure - ACCOMPLISHED (AS REQUIRED)

If it becomes necessary to correct airplane altitude, due to entry into or departure from positive control, or change in altimeter setting, the IDNE altitude should be corrected as follows:

a. Enter Display Pushbutton - DEPRESSED FOR COMPUTER IN CONTROL

The display light should display PRI or AUX.

b. Enter Select Switch - PRES POS

c. Display Select Switch - SPECIAL DATA

d. Display (Norm/Altn) Pushbutton - NORM

e. Keyboard Clr Pushbutton - DEPRESSED

f. Keyboard 006 - ENTERED

This code will appear on the "G" data register.

g. Keyboard Ent Pushbutton - DEPRESSED

h. Correct CADC Altitude - XXXXX

This data will appear on the "C" data register as XXXXX.

i. Keyboard Ent Pushbutton - DEPRESSED

CRUISE.

1. Altimeter - "STATE SETTING" (CP, P, N)

Note

If barometric altitude data to the computer-in-control becomes invalid, present altitude should be manually inserted upon reaching each new cruise altitude to reduce navigation error buildup.

2. EMAC - UPDATED AS REQUIRED
   a. Total Fuel Weight - VERIFIED/CORRECTED
   b. Specific Range Adjust - ADJUSTED
   c. Mach Correction - ADJUSTED AS REQUIRED
   d. Average Wind - ADJUSTED AS REQUIRED

3. Air Alignment Procedures - ACCOMPLISHED (IF REQUIRED)

The following equipment must be functioning properly to accomplish an air alignment:

IMU (Including attitude servos)

CPS (Control Power Supply)

Primary Analog-to-Digital Converter

Primary Computer

AHRU (one required)

CADC (one required)

The Doppler must be continuously available, with no malfunction or memory mode indicated, from the time INRTL DOP is selected.

From the time INRTL DOP is selected until five minutes after the start of fine align, the airplane should maintain straight and level flight, no change in airspeed and maintain an average bank angle of zero. Excursions of up to three degrees bank angles may be made. If the above limits are exceeded or if other alignment criteria are not met the IDNE may revert to Doppler DR. If the IDNE does revert to Doppler Dead Reckoning and no malfunction lights are on, the operator should start another air alignment. After five minutes in fine align, 30-degree bank angles are allowed until the end of fine align. If bank angle limits are exceeded, alignment may continue normally, but navigation accuracy will be degraded.

   a. Compl Sel Pushbutton - DEPRESSED FOR PRI
   b. Enter Display Pushbutton - DEPRESSED FOR PRI
   c. Mode Select Switch - INRTL DOP

Note

When an air alignment is made, the Mode Select switch should be rotated through the OFF position before selecting the DOP position. If the aux computer is subsequently selected for control or display and the foregoing was not accomplished, the IMU MALF light will come on.

   d. Mode Enable Pushbutton - DEPRESSED

After 10 seconds, the mode light displays STBY. After IMU warmup, the mode light will display COARSE ALIGN and the computer starts the coarse alignment operation. When coarse alignment is complete, the mode light displays FINE ALIGN.

Note

During air alignment, at the time the system cycles to coarse align, the IMU MALF light may come on and the system downgrade to the Doppler DR mode. If neither the Madar Nor the IDNE switchwords (III Mode for special data display) indicates an IMU failure, recycle the IDNE for another air alignment.

When fine align is completed, the Mode indicator will display INERT DOP or INERT. After this time, loss of Doppler, AHRU's or the analog-to-digital converter will not degrade the IDNE below the inertial mode. The time to fine align is approximately 14 minutes. The total alignment time is approximately 35 minutes. If the DOP DR error exceeds 5 NMI, fixes should be entered as required to reduce the error to less than 5 NMI.

4. AHRU's - CROSS-CHECKED
   a. Display (Norm/Altn) Pushbutton - NORM
   b. Enter Select Switch - PRES POS
   c. Display Select Switch - SPECIAL DATA
   d. Keyboard Clr Pushbutton - DEPRESSED
   e. Keyboard 300 - ENTERED
   f. Keyboard Ent Pushbutton - DEPRESSED

The data registers will display the following data:

"C" IMU True Heading, if valid (zeroes, if invalid)

"E" AHRU 1 True Heading

"F" AHRU 2 True Heading

"G" 300

5. Doppler or Air Data DR Initialization - ACCOMPLISHED (IF REQUIRED)

This procedure pertains to initialization of the IDNE dead reckoning navigation modes (Dop DR or Air Data DR) while the airplane is airborne.

a. Mode Select Switch - DOP DR OR AIR DATA DR

b. Mode Enable Pushbutton - DEPRESSED

When airborne initialization is accomplished for Doppler DR, the Mode light displays STBY until Doppler warmup, then ENTER PP will be displayed. If Air Data Dr is selected, ENTER PP will be displayed.

c. Comp Sel Pushbutton - DEPRESSED FOR PRI

d. Enter Display Pushbutton - DEPRESSED FOR PRI

e. Present Position Data Entry Procedures - ACCOMPLISHED

Do not depress the ENT pushbutton for altitude data entry until the airplane flies over the selected PP.

6. Wind Data Input for Air Data DR Navigation - ACCOMPLISHED (IF REQUIRED)

a. Enter Display Pushbutton - DEPRESSED FOR PRI OR AUX

b. Enter Select Switch - FIX

c. Display Select Switch - DR NAV

d. Display (Norm/Altn) Pushbutton - DEPRESSED FOR NORM

e. Keyboard Clr Pushbutton - DEPRESSED

The data registers will be dark.

f. Wind Direction - XXXXX

The "C" data register displays the wind direction as 0XXX.X.

g. Keyboard Ent Pushbutton - DEPRESSED

h. Wind Velocity - XXX

The "D" data register displays the wind velocity in knots as 00XXX.

i. Keyboard Ent Pushbutton - DEPRESSED

7. IDNE Position Fixing Procedures - ACCOMPLISHED (IF REQUIRED)

a. TACAN Position Fixing Procedure - ACCOMPLISHED (IF REQUIRED)

Note

If the selected TACAN set is not tuned to the channel as entered, the applicable TACAN INVALID light will come on.

(1) Enter Display Pushbutton - DEPRESSED FOR PRI

(2) Enter Select Switch - FIX

(3) Display Select Switch - FIX

(4) Display (Norm/Altn) Pushbutton - DEPRESSED FOR NORM

(5) Keyboard Clr Pushbutton - DEPRESSED

The data registers will be dark.

(6) TACAN No. 1 or No. 2 Fix Number - XX1 or XX2.

The "G" data register displays the fix number as XX1 or XX2.

(7) Keyboard Ent Pushbutton - DEPRESSED

(8) Enter Select Switch - PRES POS

(9) Keyboard Clr Pushbutton - DEPRESSED

(10) Keyboard Ent Pushbutton - DEPRESSED

The data register displays the TACAN fix data.

(11) TACAN Invalid Light - CHECKED

If the TACAN invalid light is amber, the fix reject light will be amber and the fix must be rejected as follows:

(a) Fix Reject Pushbutton - DEPRESSED

If the fix reject light changes from amber to white, fix is rejected.

(12) Fix Reject Light - CHECKED

If the fix reject light is amber and the TACAN is valid, accomplish one of the following:

(a) Fix Reject Pushbutton - DEPRESSED

If the fix reject light turns white, the fix is rejected.

(b) Fix Override Pushbutton - DEPRESSED

The fix override turns green for two seconds, then the fix enable turns steady green. The first fix is accepted without Kalman filtering updating only the IDNE Present Position. All subsequent fixes are taken with Kalman filtering.

If the fix reject light is white, accomplish one of the following:

(c) Fix Reject Pushbutton - DEPRESSED

If the fix reject light turns amber for two seconds, the fix is rejected.

(d) Fix Override Pushbuttons - DEPRESSED

The fix override turns green for two seconds, then the fix enable turns steady green. The first fix is accepted without Kalman filtering updating only the IDNE Present Position. All subsequent fixes are taken with Kalman filtering.

(e) Fix Enable Pushbutton - DEPRESSED

If the fix enable light is a steady green, the fix is accepted with Kalman filtering.

(13) Fix Reject Pushbutton - DEPRESSED

TACAN position fixing is terminated.

b. Radar Position Fixing Procedure - ACCOMPLISHED (IF REQUIRED)

(1) Enter Display Pushbutton - DEPRESSED FOR PRI OR AUX

(2) Display (Norm/Altn) Pushbutton - DEPRESSED FOR NORM

(3) Enter Select Switch - FIX

(4) Display Select Switch - FIX

(5) Keyboard Clr Pushbutton - DEPRESSED

The data registers will be dark.

(6) Radar Position Fix Number - XX0

The "G" data register displays the fix number as XX0.

(7) Keyboard Ent Pushbutton - DEPRESSED

(8) Enter Select Switch - PRES POS

(9) Keyboard Clr Pushbutton - DEPRESSED

(10) Keyboard Ent Pushbutton - DEPRESSED

The MMR cursors will track the computed position of the fix point. The data registers will display zeroes.

(11) MMR Cursors - POSITIONED

The cursors will be moved over the actual fix point.

(12) Cursor Control Update Pushbutton - DEPRESSED

The data registers will display Radar Fix data.

(13) MMR Invalid Light - CHECKED

If the MMR invalid light is amber, the fix reject light will be amber and the fix must be rejected as follows:

(a) Fix Reject Pushbutton - DEPRESSED

If the fix reject light changes from amber to white, the fix is rejected.

(14) Fix Reject Light - CHECKED

If the fix reject light is amber, and the MMR is valid, accomplish one of the following:

(a) Fix Reject Pushbutton - DEPRESSED

If the fix reject light turns white, the fix is rejected.

(b) Fix Override Pushbutton - DEPRESSED

If the fix override light turns green for two seconds, the fix is accepted without Kalman filtering, updating only the IDNE Present Position.

If the fix reject light is white, accomplish one of the following:

(c) Fix Reject Pushbutton - DEPRESSED

If the fix reject light turns amber for two seconds, the fix is rejected.

(d) Fix Override Pushbutton - DEPRESSED

If the fix override light turns green for two seconds, the fix is accepted without Kalman filtering, updating only the IDNE Present Position.

(e) Fix Enable Pushbutton - DEPRESSED

If the fix enable light turns green for two seconds, the fix is accepted with Kalman filtering.

c. LORAN Position Fixing Procedure - ACCOMPLISHED (IF REQUIRED)

(1) Enter Display Pushbutton - DEPRESSED FOR PRI

(2) Enter Select Switch - FIX

(3) Display Select Switch - FIX

(4) Display (Norm/Altn) Pushbutton - DEPRESSED FOR NORM

(5) Keyboard Clr Pushbutton - DEPRESSED

The data registers will be dark.

(6) Master Station Fix Number - XX3

The "G" data register displays the fix number as XX3.

(7) Keyboard Ent Pushbutton - DEPRESSED

Note

During call up for fixing, the only LORAN station that requires the key element (the third number, e.g., XX3) is the master station. To accomplish a LORAN fix, the stations must be called up in the proper sequence of Master, Slave A, and Slave B. It may take up to 20 seconds to display the first LORAN derived position errors.

(8) Slave A Station Fix Number - XXO

The "G" data register displays the fix number as XX1.

(9) Keyboard Ent Pushbutton - DEPRESSED

(10) Slave B Station Fix Number - XXO

The "G" data register displays the fix number as XX2.

(11) Keyboard Ent Pushbutton - DEPRESSED

(12) Enter Select Switch - PRES POS

(13) Keyboard Clr Pushbutton - DEPRESSED

(14) Keyboard Ent Pushbutton - DEPRESSED

The data registers display the LORAN fix data.

(15) LORAN Invalid Light - CHECKED

If the LORAN invalid light is amber, the fix reject light will be amber and the fix must be rejected as follows:

(a) Fix Reject Pushbutton - DEPRESSED

If the fix reject light changes from amber to white, the fix is rejected.

(16) Fix Reject Light - CHECKED

If the fix reject light turns amber, accomplish one of the following:

(a) Fix Reject Pushbutton - DEPRESSED

If the fix reject light turns white, the fix is rejected.

(b) Fix Override Pushbutton - DEPRESSED

The fix override turns green for two seconds, then the fix enable turns steady green. The first fix is accepted without Kalman filtering, updating only the IDNE Present Position. All subsequent fixes are taken with Kalman filtering.

If the fix reject light is white, accomplish one of the following:

(c) Fix Reject Pushbutton - DEPRESSED

If the fix reject light turns amber for two seconds, the fix is rejected.

(d) Fix Override Pushbutton - DEPRESSED

The fix override turns green for two seconds, then the fix enable turns steady green. The first fix is accepted without Kalman filtering, updating only the IDNE Present Position. All subsequent fixes are taken with Kalman filtering.

(e) Fix Enable Pushbutton - DEPRESSED

If the fix enable light is a steady green the fix is accepted with Kalman filtering.

(15) Fix Reject Pushbutton - DEPRESSED

The LORAN position fixing procedure is terminated.

d. Manual Position Fixing Procedure - ACCOMPLISHED (IF REQUIRED)

(1) Enter Display Pushbutton - DEPRESSED FOR COMPUTER IN CONTROL

(2) Enter Select Switch - FIX

(3) Display Select Switch - FIX

(4) Display (Norm/Altn) Pushbutton - DEPRESSED FOR NORM

(5) Keyboard Clr Pushbutton - DEPRESSED

The data registers will be dark.

(6) Fix Latitude - N/S XXXXX

The "A" data register will display the fix latitude as N/S XX°XX.X'.

(7) Keyboard Ent Pushbutton - DEPRESSED

(8) Fix Longitude - E/W XXXXXX

The "B" data register will display the fix longitude as E/W XXX°XX.X'.

(9) Keyboard Ent Pushbutton - DEPRESSED

(10) Fix Type - 001 OR 010 OR 050

The "F" data register will display the fix type 00XXX.

(11) Keyboard Ent Pushbutton - DEPRESSED

Depress the Ent pushbutton when over the fix point.

(12) Enter Select Switch - PRES POS

(13) Keyboard Clr Pushbutton - DEPRESSED

(14) Keyboard Ent Pushbutton - DEPRESSED

The data registers will display the fix data.

(15) Fix Reject Light - CHECKED

If the fix reject light is amber, accomplish one of the following:

(a) Fix Reject Pushbutton - DEPRESSED

If the fix reject light turns white, the fix is rejected.

(b) Fix Override Pushbutton - DEPRESSED

If the fix override light turns green for two seconds, the fix is accepted without Kalman filtering, updating only the IDNE Present Position.

If the fix reject light is white, accomplish one of the following:

(c) Fix Reject Pushbutton - DEPRESSED

If the fix reject light turns amber for two seconds, the fix is rejected.

(d) Fix Override Pushbutton - DEPRESSED

If the fix override light turns green for two seconds, the fix is accepted without Kalman filtering, updating only the IDNE Present Position.

(e) Fix Enable Pushbutton - DEPRESSED

If the fix enable light turns green for two seconds, the fix is accepted with Kalman filtering.

e. Celestial Data Position Fixing Procedure - ACCOMPLISHED (IF REQUIRED)

The fix process will be initiated by the navigator. He will alert the computer that he is ready to begin a celestial fix by entering the GMT of the fix. Using this time and the position at the time of the fix, the local hour angle (LHA) of Aries will be computed and displayed on the "F" data register, if the GHA of Aries was previously entered. The navigtaor can then use this LHA and HO 249 to select the celestial bodies to be shot.

This procedural step must be accomplished to make the Z_n and H_c in step (16) below valid.

Note

The airplane should be flown with a constant heading and velocity until the navigator has completed the celestial position fixing procedure (variance code entered).

(1) Enter Display Pushbutton - DEPRESSED FOR PRI

(2) Enter Select Switch - FIX

(3) Display Select Swtich - SPECIAL DATA

(4) Display (Norm/Altn) Pushbutton - DEPRESSED FOR ALTN

(5) Keyboard Clr Pushbutton - DEPRESSED

The data registers will be dark.

(6) GMT Hours - XX

The "C" data registers will display the GMT, in hours as 000XX.

(7) Keyboard Ent Pushbutton - DEPRESSED

(8) GMT Minutes and Seconds - XX XX

The "D" data register will display the GMT, in minutes, and seconds as XX0XX.

(9) Keyboard Ent Pushbutton - DEPRESSED

The "A" register will display the assumed latitude, the "B" register will display the assumed longitude, and the "F" register will display the LHA of Aries as XXXXX.

(10) Enter Select Switch - FIX

(11) Display Select Switch - SPECIAL DATA

(12) Display (Norm/Altn) Pushbutton - DEPRESSED FOR NORM

(13) Keyboard Clr Pushbutton - DEPRESSED

The data registers will be dark.

(14) Celestial Body Code Number - XXO

The "G" data register displays the code number as XXO.

The number of celestial bodies for which estimated H_c and Z_n will be computed is not program limited. After each celestial body code number is entered, the estimated H_c and Z_n will be displayed so that the navigator can copy them. Each display will be retained until the next code is inserted.

(15) Keyboard Ent Pushbutton - DEPRESSED

The data registers display the celestial fix data.

A - N/S XX°XX.X' (Assumed Lat.)

B - E/W XXX°XX.X' (Assumed Long.)

C - 000XX (current GMT in hours)

D - XX0XX (current GMT in Min. & Sec.)

E - 0/-XXXX ($H_c \pm$ Deg. & Min.)

F - XXXXX (Z_n 0-360 Deg. & Min.)

G - XXO (Code No.)

Note

The assumed position is the same as that in step (9).

(16) Hc and Zn - RECORDED

(17) Steps (13) thru (15) - REPEATED

Repeat steps (13) thru (15) for the other shots to be made. The Hc and Zn is now available for each of the shots to be made.

(18) Keyboard Clr Pushbutton - DEPRESSED

(19) Celestial Shots - ACCOMPLISHED

Make shots and record the Ho and GMT of each shot.

The shots should be entered on the keyboard in order. The computer is now notified.

(20) Celestial Body Code Number - XX1

Enter XX1 on the Keyboard. XX is the code number of the celestial body.

(21) Ent Pushbutton - DEPRESSED

(22) Ho of Celestial Body - $\pm$XXXX

A plus (+) sign is used for a body observed above the horizon and a minus (-) sign is used for a body observed below the horizon.

The "E" data register displays 0/-XX°XX'.

(23) Ent Pushbutton - DEPRESSED

(24) GMT Hours - XX

The "D" data register displays 000XX.

(25) Ent Pushbutton - DEPRESSED

(26) GMT Minutes and Seconds - XXXX

Enter midpoint time of observation.

The "D" data register displays XX0XX.

(27) Ent Pushbutton - DEPRESSED

(28) Celestial Fix Point Variance Code - XXX

Limits of Uncertainity	Variance Code
2 Nautical Miles	020
5 Nautical Miles	050
10 Nautical Miles	100
20 Nautical Miles	200

The "F" data register displays 00XXX.

(29) Ent Pushbutton - DEPRESSED

The data registers will display the following:

Data Register	Data Formal	Data Definition
A	N/S XX°XX.X'	Assumed Lat at fix Time.
B	E/W XXX°XX.X'	Assumed Long. at Fix Time.
C	000XX	Current GMT (Hours)
D	XX0XX	Current GMT (Minutes, Seconds)
E	0/-XX.XX	Intercept; 1/100 of a NM
F	XXXXX	Z_n Azimuth from North 0-360 deg. and min. Intercept will always be plotted in the direction displayed.
G	XX1	Celestial Body Code Number

(30) Enter Select Switch - PRES POS

(31) Display Select Switch - FIX

(32) Clr Pushbutton - DEPRESSED

(33) Ent Pushbutton - DEPRESSED

The data registers will display the following:

Data Register	Data Format	Data Definition
A	N/S XX°XX.X'	Intercept Terminus Lat.
B	E/W XXX°XX.X'	Intercept Terminus Long.
C	0/-0XX.X	Lat. Error, Arc Min.
D	0/-0XX.X	Long. Error, Arc Min.
E	0XXX.X	Radial Error, NM
F	00XXX	Fix Type
G	XXX	Celestial Body Code Number

(34) Fix Reject Light - CHECKED

If the fix reject light is amber, accomplish one of the following:

(a) Fix Reject Pushbutton - DEPRESSED

If the fix reject light turns white, the fix is rejected.

(b) Fix Override Pushbutton - DEPRESSED

If the fix override light turns green for two seconds, the fix is accepted without Kalman filtering, updating only the IDNE Present Position.

If the fix reject light is white, accomplish one of the following:

(c) Fix Reject Pushbutton - DEPRESSED

If the fix reject light turns amber for two seconds, the fix is rejected.

(d) Fix Override Pushbutton - DEPRESSED

If the fix override light turns green for two seconds, the fix is accepted without Kalman filtering, updating only the IDNE Present Position.

(e) Fix Enable Pushbutton - DEPRESSED

If the fix enable light turns green for two seconds, the fix is accepted with Kalman filtering.

(35) Enter Select Switch - FIX

(36) Display Select Switch - SPECIAL DATA

(37) Repeat steps (18) through (36) for remaining shots.

8. IDNE Radar Tracking and Recon Procedure - ACCOMPLISHED (IF REQUIRED)

In this mode of operation, the IDNE commands the MMR to track the current Destination Point (DP). The operator may, by placing the cursors over a point of interest, determine the coordinates of the point while tracking a DP. The range and bearing of the current DP will be composed with the MMR field of view. If the DP is beyond the MMR field of view, the Radar Cursors will be placed at the maximum scope position until the DP comes into view.

a. Enter Display Switch - DEPRESSED FOR COMPUTER IN CONTROL

b. Enter Select Switch - DEST

c. Display Select Switch - RADAR CURSOR

d. Display (Norm/Altn) Pushbutton - NORM

e. Keyboard Clr Pushbutton - DEPRESSED

The "A" through "G" register will go blank.

f. Keyboard Ent Pushbutton - DEPRESSED

MMR Cursors will track the current DP.

Note

Should the operator wish to determine the coordinates of some point of interest proceed with steps g and h.

g. Cursor Control Handle - CURSORS POSITIONED

Position the cursors to "Kiss" the recon point.

h. Cursor Update Command Pushbutton - DEPRESSED

The latitude and longitude of the recon point will be displayed on the "A" and "B" data registers respectively. To terminate radar tracking of recon point, accomplish step i.

i. Fix Reject Pushbutton - DEPRESSED

Fix Reject amber for 5 seconds - MMR Cursors will track the original DP.

9. IDNE Polar Grid Navigation Procedure - ACCOMPLISHED (IF REQUIRED)

If the airplane is to be flown above 70 degrees latitude (polar area), both AHRU's are set to the DG mode and the NAV SET knobs are adjusted to set the correct AHRU heading which is referenced to the 180-degree meridian. This procedure is accomplished so that the IDNE data to the flight instruments will be to the same reference as the compass cards.

To initiate polar grid navigation, the AHRU's must be adjusted. This is accomplished by flying the airplane on a constant heading during the adjustment period. The grid heading is derived either on the IDNE indicator panel or from a celestial observation. To adjust the AHRU's and start the polar grid navigation, proceed as follows:

a. Enter Display Pushbutton - COMPUTER IN CONTROL

The DISPLAY light should display PRI or AUX

b. Display (Norm/Altn) Pushbutton - NORM

c. Enter Select Switch - PRES POS

d. Display Select Switch - SPECIAL DATA

e. Keyboard Clr Pushbutton - DEPRESSED

f. Keyboard 300 - ENTERED

g. Keyboard Ent Pushbutton - DEPRESSED

The data registers will display the following:

"C" IMU True Heading, if valid (zeroes, if invalid)

"E" AHRU 1 True Heading

"F" AHRU 2 True Heading

"G" 300

h. AHRU No. 1 Mode Switch - DG

The invalid light for AHRU No. 1 should come on.

Note

Before placing AHRU mode switches to DG, disengage the autopilot horizontal nav mode.

i. AHRU No. 1 Nav Set Knob - ADJUSTED

Rotate the AHRU No. 1 Nav Set Knob until the "E" data register reads the same as the "C" data register, if not all zeroes.

j. Keyboard 1 Pushbutton - DEPRESSED

k. Keyboard Ent Pushbutton - DEPRESSED

The invalid light goes off for AHRU No. 1.

l. AHRU No. 2 Mode Switch - DG

The invalid light for AHRU No. 2 should come on.

m. AHRU No. 2 Nav Set Knob - ADJUSTED

Rotate the AHRU No. 2 Nav Set Knob until the "F" data register reads the same as the "C" data register, if not all zeroes.

n. Keyboard 2 Pushbutton - DEPRESSED

o. Keyboard Ent Pushbutton - DEPRESSED

The invalid light goes off for AHRU No. 2.

Note

All displayed headings are True Heading. If zeroes are displayed, the AHRU's should be set to the airplane heading with respect to Grid North and left in the DG mode.

When the IMU heading is initialized, the IMU heading output is Magnetic heading. If operating at latitudes greater than 70 degrees, IMU heading will become invalid and the HAMS INOP light will come on. To reference IMU heading output to Grid (the 180th meridian), accomplish the following:

Note

Longitude is applied to the IMU True Heading.

p. Comp Sel Pushbutton - DEPRESSED FOR PRI

q. Enter Display Pushbutton - DEPRESSED FOR PRI

r. Keyboard Clr Pushbutton - DEPRESSED

s. Keyboard 301 - ENTERED

t. Keyboard Ent Pushbutton - DEPRESSED

The HAMS INOP light will go out.

To terminate Polar Grid Navigation, accomplish the following:

u. Keyboard 302 - ENTERED

This restores IDNE heading outputs to magnetic reference.

v. AHRU Mode Switches - SYNC

Hold the switch in SYNC for 10 seconds.

w. AHRU Mode Switches - SLAVE

The AHRU headings will now be referenced to magnetic north.

x. AHRUs - CROSSCHECKED

DESCENT.

1. Sextant - REMOVED AND STOWED

2. Altimeter - "STATE SETTING" (CP,P,N)

3. EMAC SRA Knob - DEPRESSED

4. Descent, Penetration - MONITOR

5. IDNE Altitude Correction Procedure - ACCOMPLISHED (IF REQUIRED)

If it becomes necessary to correct airplane altitude, due to entry into or departure from positive control, or change in altimeter setting, the IDNE altitude should be corrected by using the IDNE Altitude Correction Procedure in the "After Take-off, Climb" checklist in this section.

6. IDNE Vertical Navigation Initiation Procedure - ACCOMPLISHED (IF REQUIRED)

a. Enter Display Pushbutton - DEPRESSED FOR PRI

b. Enter Select Switch - PRESENT POSITION

c. Display Select Switch - VERT NAV

d. Display (Norm/Altn) Pushbutton - DEPRESSED FOR NORM

e. Keyboard Clr Pushbutton - DEPRESSED

The "A" through "G" data registers will display nothing.

f. Keyboard Ent Pushbutton - DEPRESSED

The "A" through "G" data registers will display VERT NAV data.

g. Vert Nav On/Off Pushbutton - DEPRESSED FOR ON

h. Vert Nav Point/Slope Pushbutton - DEPRESSED FOR POINT OR SLOPE

i. Mode Enable Pushbutton - DEPRESSED

The vertical navigation mode is in operation and pitch steering signals are displayed on the ADI's when PRI COMP is selected on the nav select panel.

7. IDNE Vertical Navigation Termination Procedure - ACCOMPLISHED (IF REQUIRED)

a. Enter Display Pushbutton - DEPRESSED FOR PRI

b. Enter Select Switch - PRES POS

c. Display Select Switch - VERT NAV

d. Display (Norm/Altn) Pushbutton - DEPRESSED FOR NORM

e. Keyboard Clr Pushbutton - DEPRESSED

The A through G registers will display nothing.

f. Keyboard Ent Pushbutton - DEPRESSED

g. Vert Nav ON/OFF Pushbutton - DEPRESSED FOR OFF

The Vert Nav POINT/SLOPE light goes off.

h. Mode Enable Pushbutton - DEPRESSED

8. IDNE Aerial Delivery (CARP) MMR Procedure - ACCOMPLISHED (IF REQUIRED)

CAUTION

Do not descend below the drop zone altitude during a CARP as the steering command will be in error. An error could occur, for example, if the approach to the drop zone is over water, up a slope, or if the drop zone is located on a mesa.

a. IDNE Altitude Correction Procedure - ACCOMPLISHED (IF REQUIRED)

At some time just prior to starting a CARP run, the IDNE altitude shall be updated as close as possible to the actual true altitude above mean sea level by using the IDNE Altitude Correction Procedure in the "After Take-off, Climb" checklist in this section.

Note

Do not perform a CARP if TAS to the computer-in-control is invalid, unless required to complete a mission. Accuracy of the CARP will be influenced by the error of the last computed wind.

b. Enter Display Pushbutton - DEPRESSED FOR COMPUTER IN CONTROL

c. Enter Select Switch - PRES POS

d. Display Select Switch - DROP DATA

e. Display (Norm/Altn) Pushbutton - DEPRESSED FOR NORM

f. Keyboard Clr Pushbutton - DEPRESSED

The data registers will be dark.

g. Aimpoint Number - XX0

The "G" data register will display the drop number as XX0.

h. Keyboard Ent Pushbutton - DEPRESSED

The data registers will display the drop data.

i. Term Nav Pushbutton - DEPRESSED

The light in the term nav pushbutton turns green.

j. Mode Enable Pushbutton - DEPRESSED

The light in the term nav pushbutton blinks white for two seconds then turns green. The IDNE computer commands the MMR cursors to track the aimpoint as it comes into view.

k. MMR Cursors - POSITIONED OVER AIMPOINT

The navigator positions the MMR cursors over the actual aimpoint.

l. Cursor Control Update Pushbutton - DEPRESSED

The light in the term nav pushbutton blinks white for two seconds, then turns green.

The action initiates the terminal navigation subroutine. Vertical and horizontal steering lights will go off indicating termination of these functions. Steering commands are now generated by the terminal navigation circuitry.

m. Steps k and l - REPEAT AS REQUIRED

n. Display Select Switch - DROP NAV

The data registers will display the drop nav data.

Accomplish steps o thru v if a ground wind is available. If not, proceed to step w.

o. Enter Select Switch - AIR DROP

p. Display Select Switch - DROP DATA

q. Display (Norm/Altn) Pushbutton - DEPRESSED FOR ALTN

r. Keyboard Clr Pushbutton - DEPRESSED

The data registers will be dark.

s. Wind Direction - XXX.X

The "E" data register displays the wind directions as 0XXX.X

t. Keyboard Ent Pushbutton - DEPRESSED

u. Wind Velocity - XXX

The "F" data register displays the wind velocity in Knots as 00XXX.

v. Keyboard Ent Pushbutton - DEPRESSED

w. Enter Select Switch - PRES POS

x. Display Select Switch - DROP NAV

y. Display (Norm/Altn) Pushbutton - DEPRESSED FOR NORM

z. Keyboard Clr Pushbutton - DEPRESSED

The data registers will be dark.

aa. Keyboard Ent Pushbutton.

The data registers will display the drop data.

ab. Air Drop 10-SEC Light - CHECKED

The air drop 10-SEC light turns white for 10 seconds prior to reaching CARP.

ac. CARP Light - CHECKED

When the airplane reaches CARP, the CARP light turns green and the 10-SEC light goes off.

When the airplane reaches the end of the drop zone, the CARP light goes off.

ad. Term Nav Pushbutton - DEPRESSED

The term nav light goes off and the CARP light goes off, if still on.

ae. Mode Enable Pushbutton - DEPRESSED

The IDNE is out of the air drop mode.

9. IDNE Aerial Delivery (CARP) Manual Procedure - ACCOMPLISHED (IF REQUIRED)

CAUTION

Do not descend below the drop zone altitude during A CARP as the steering command will be in error. An error could occur, for example, if the approach to the drop zone is over water, up a slope, or if the drop zone is located on a mesa.

Note

Do not perform a CARP if TAS to the computer-in-control is invalid, unless required to complete a mission. Accuracy of the CARP will be influenced by the error of the last computed wind.

a. IDNE Altitude Correction Procedure - ACCOMPLISHED (IF REQUIRED)

If it becomes necessary to correct airplane altitude due to a change in altimeter setting, the IDNE altitude should be corrected by using the IDNE Altitude Correction Procedure in the "After Take-Off, Climb" checklist in this section.

b. Enter Display Pushbutton - DEPRESSED FOR COMPUTER IN CONTROL

c. Enter Select Switch - PRES POS

d. Display Select Switch - DROP DATA

e. Display (Norm/Altn) Pushbutton - DEPRESSED FOR NORM

f. Keyboard Clr Pushbutton - DEPRESSED

The "A" thru "G" data registers will be dark.

g. Aimpoint Number - XX1

The "G" data register displays this as the drop number XX1.

h. Keyboard Ent Pushbutton - DEPRESSED

The "A" through "G" data registers will display the drop data.

i. Term Nav Pushbutton - DEPRESSED

The light in the pushbutton will turn green.

j. Mode Enable Pushbutton - DEPRESSED

The mode enable pushbutton is depressed when over the aimpoint. The term nav light blinks white for 5 seconds and the position is updated to the airpoint.

Note

This action initiates the terminal navigation sub-routine. Vertical and horizontal steering lights will go off indicating termination of these functions. Steering commands are now generated by the terminal navigation circuitry.

k. Display Select Switch - DROP NAV

DROP NAV may be selected to display the drop nav data.

Accomplish steps 1 thru s if a ground wind is available. If not, proceed to step t.

l. Enter Select Switch - AIR DROP

m. Display Select Switch - DROP DATA

n. Display (Norm/Altn) Pushbutton - DEPRESSED FOR ALTN

o. Keyboard Clr Pushbutton - DEPRESSED

The data registers will be dark.

p. Wind Direction - XXX.X

The "F" data register will display the wind direction as 0XXX.X.

q. Keyboard Ent Pushbutton - DEPRESSED

r. Wind Velocity - XXX

The "F" data register will display the wind velocity in Knots as 00XXX.

When the wind velocity is entered, the computations are based on the average between the wind at the drop altitude and the surface wind at the drop zone. If the surface wind at the drop zone is zero, 001 must be entered so that the average wind can be computed. If the surface wind at the drop zone is zero, and 000 is entered, the computer will use the wind at the drop altitude.

s. Keyboard Ent Pushbutton - DEPRESSED

t. Enter Select Switch - PRES POS

u. Display Select Switch - DROP NAV

v. Display (Norm/Altn) Pushbutton - DEPRESSED FOR NORM

w. Keyboard Clr Pushbutton - DEPRESSED

The data registers will be dark.

x. Keyboard Ent Pushbutton - DEPRESSED

The data registers will display the drop nav data.

The Air Drop 10-SEC warning light turns white 10 seconds before reaching CARP.

The CARP light turns green and the 10-SEC light goes off when the airplane reaches CARP.

When the airplane reaches the end of the drop zone, the CARP light goes off.

y. Term Nav Pushbutton - DEPRESSED

The term nav green light goes off and the CARP light goes off if still on.

z. Mode Enable Pushbutton - DEPRESSED

The IDNE is out of the air drop mode.

10. Navigator's Report - "CHECK COMPLETED" (N)

INSTRUMENT APPROACHES.

Airborne Radar Approach.

If an airborne radar approach is planned, accomplish the following:

*1. IDNE - "SET" (N)

a. DP - ENTERED

Note

The DP may be entered during preflight or any time prior to the ARA.

(1) Enter Display Pushbutton - DEPRESSED FOR COMPUTER IN CONTROL

(2) Enter Select Switch - DEST

(3) Display Select Switch - DEST

(4) Display (Norm/Altn) Pushbutton - DEPRESSED FOR NORM

(5) Keyboard Clr Pushbutton - DEPRESSED

(6) DP Number - XXO

(7) Keyboard Ent Pushbutton - DEPRESSED

(8) DP Latitude - N/S XXXXX

(9) Keyboard Ent Pushbutton - DEPRESSED

(10) DP Longitude - E/W XXXXXX

(11) Keyboard Ent Pushbutton - DEPRESSED

Note

The DP designates the radar target or runway threshold on the approach end of the runway.

(12) Display (Norm/Altn) Pushbutton - DEPRESSED FOR ALTN

(13) Fuel Time - XXX

(14) Keyboard Ent Pushbutton - DEPRESSED

(15) Display (Norm/Altn) Pushbutton - DEPRESSED FOR NORM

b. Vert Nav Data for DP - ENTERED

(1) Comp Sel Pushbutton - DEPRESSED FOR COMPUTER IN CONTROL

(2) Enter Display Pushbutton - DEPRESSED FOR COMPUTER IN CONTROL

(3) Enter Select Switch - DEST

(4) Display Select Switch - VERT NAV

(5) Display (Norm/Altn) Pushbutton - DEPRESSED FOR NORM

(6) Keyboard Clr Pushbutton - DEPRESSED

(7) Destination Number - XXO

(8) Keyboard Ent Pushbutton - DEPRESSED

(9) Descent Angle - 0/-XX

(10) Keyboard Ent Pushbutton - DEPRESSED

(11) DP Terrain Altitude - XXXXX

(12) Keyboard Ent Pushbutton - DEPRESSED

(13) Display (Norm/Altn) Pushbutton - DEPRESSED FOR ALTN

(14) Flare Bearing - XXX.X

(15) Keyboard Ent Pushbutton - DEPRESSED

c. Mode Select Switch - INRTL DOP

d. Mode Enable Pushbutton - DEPRESSED

Note

After The Mode Enable pushbutton is depressed, the cursors may drift or jump due to Doppler update. If this occurs, select INRTL.

e. Radar Approach to DP - INITIATED

To initiate a radar approach (point A, figure 2-13) to the DP, accomplish the following:

(1) Comp Sel Pushbutton - DEPRESSED FOR COMPUTER IN CONTROL

(2) Enter Display Pushbutton - DEPRESSED FOR COMPUTER IN CONTROL

(3) Enter Select Switch - PRES POS

(4) Display Select Switch - DEST

(5) Display (Norm/Altn) Pushbutton - DEPRESSED FOR NORM

(6) Keyboard Clr Pushbutton - DEPRESSED

(7) DP - XXO

(8) Keyboard Ent Pushbutton - DEPRESSED

(9) Term Nav Pushbutton - DEPRESSED

(10) Mode Enable Pushbutton - DEPRESSED

*2. MMR - "SET" (N)

a. X-Band Radar - ASSIGNED TO NAVIGATOR

b. Tune Mode Switch - FA

c. Glideslope (Deg) Switch - AS REQUIRED

d. Gnd Swps Knob - SR

e. Cursor/Mkr Switch - CURSOR

f. Stab Switch - AS DESIRED

g. Mode Switch - MAP

(1) Range (NMI) Switch - 2-30/5

(2) Var/Dly Knob - AS REQUIRED

h. Depr Ctr Switch - ON

i. Scan Rate Switch - AS DESIRED
The SLOW position is recommended.

j. Sector Width Knob - AS DESIRED

k. Brt Knob - OPTIMIZE

l. Vid Gam Knob - OPTIMIZE

m. Rcvr Gam Knob - OPTIMIZE

n. Tilt Knob - ADJUSTED

o. Stc Knob - ADJUSTED

*3. MMR Cursors - "SET (N)

Position the cursors on the approximate target location of the runway and depress the update command pushbutton (pickle) in the MAP mode, or if inside 18 N.M., pickle when in the RA mode.

The term nav light will go off then come on again. When the navigator pickles, initially, the pilot and copilot will lose IDNE steering displays for approximately 12 seconds.

*4. Crosstrack - "STATE DISTANCE" (N)

a. Display Select Switch - DROP NAV

b. Display (Norm/Altn) Pushbutton - DEPRESSED FOR NORM

The crosstrack distance (X10 scale) display will appear in the "D" register. The distance to destination (X10 scale) display will appear in the "F" register.

Advise the pilot of crosstrack (drop nav display).

*5. MMR Radar Approach - "RADAR APPROACH READY" (N)

Select B-Scan and place cursors on runway centerline (azimuth) and "kissing" target (range). Place the MMR Mode switch to RA and then depress the update button. (See point E, figure 2-13).

Note

The MMR fail light and or no go lights will come on when the range to the target is greater than 17 N.M.

Continue to update the radar approach, as required. Advise the pilots as each update is accomplished.

CAUTION

Caution should be exercised in moving the range cursor or updating the azimuth at ranges of less than 3 N.M. Motion of the range cursor is reflected immediately in the pitch command. Motion is the azimuth cursor accompanied with actuation of the pitch pushbutton is reflected immediately in the lateral steering command.

BEFORE LANDING/TRAFFIC PATTERN.

1. Safety Belt and Shoulder Harness - ADJUSTED
2. Altimeter - "STATE SETTING" (CP, P, N)
3. Approach - MONITOR
4. Crew Landing Report - "NAV READY" (N)

AFTER LANDING.

1. MMR Function Selector Switches - OFF
2. LORAN - OFF
3. Rendezvous Radar - OFF
4. EMAC - CHECKED
   a. Altitude Select Knob - DEPRESSED
   b. Specific Range Adjust Knob - DEPRESSED
   c. Mach Correction Knob - DEPRESSED
   d. Static Temperature Knob - DEPRESSED
5. Navigator's Report - "CHECK COMPLETED" (N)

ENGINE SHUTDOWN.

1. Oxygen System - 100% AND OFF
2. IDNE Classified LORAN Station Coordinates - CLEARED

Accomplish the LORAN coordinates data entry procedure and enter zeros in the place of the LORAN fix number, fix point latitude and longitude and the LORAN time delays.

If on a quick stop, leave the mode select switch in the INRTL DOP or INRTL position

3. IDNE Failure Recall Routine - ACCOMPLISHED
   a. Enter Select Switch - PRESS POS
   b. Display Select Switch - SPECIAL DATA
   c. Enter Display Pushbutton - DEPRESSED FOR COMPUTER IN CONTROL
   d. Keyboard Clr Pushbutton - DEPRESSED
   e. Keyboard 100 - ENTERED
   f. Keyboard Ent Pushbutton - DEPRESSED

Log all failure data.

Note

All current failures will be displayed in the data registers C, D, E, and F. A bland panel means no failures currently exist.

   g. Keyboard Clr Pushbutton - DEPRESSED

Note

Recording of failure data prior to IDNE shutdown will be useful to maintenance since the failure data is not stored during IDNE shutdown.

4. Visor and/or Kneeling Operation - COORDINATED WITH CREW (N, E, LM)
5. IDNE - OFF

Note

The IDNE must be off before all power is removed from airplane.

CAUTION

If the IDNE is to be turned off after landing, do not rotate the Mode Select switch to OFF until the airplane has stopped moving. Coordination will be required among the Navigator, Flight Engineer, and Loadmaster prior to opening the visor or kneeling the airplane. Movement of the airplane or visor within 5 minutes after turning off the IDNE, may damage the IMU.

6. AHRU Instrument Ground Switches - OFF

CAUTION

The Avionics AC Bus 2 Instrument ground switch should be turned off prior to electrical power shutdown to prevent possible damage to the AHRU units.

7. Navigator's Report - "CHECK COMPLETED" (N)

BEFORE LEAVING AIRPLANE.

1. Instrument Ground Switches - OFF
2. Yellow Circuit Breakers - OPEN

Open all circuit breakers painted yellow on the navigator's circuit breaker panels.

3. Navigator's Lights - OFF

LOADMASTER

The loadmaster is responsible for the knowledge of and proper use of all payload equipment, the tiedown and restraint mechanisms, weight and balance computations using the IWBS computer, the cargo door and kneeling systems operation, and personnel support items. He shall be thoroughly familiar with the normal and emergency airlift capabilities and associated airplane systems. He shall be capable of accomplishing airplane emergency actions and the following checks:

Note

Refer to Section I for operation of subsystems.

Additional Loadmasters shall be assigned for mission accomplishment; they shall use the same checklist operating within the compartment concept. For ease in identification during subsystem operation, additional loadmasters will be designated by physical location of the special mission equipment or subsystem they are operating (e.g. aft flight deck, troop compartment, cargo compartment, forward, aft, right or left).

Items marked with a black symbol (.) shall be accomplished for nuclear cargo airlift. As additional actions, they are mandatory.

During an intermediate stop, it is not necessary to perform all of the preflight check. Only those items identified by an asterisk or items on which maintenance has been performed are required. Unmarked items may be checked at the discretion of the loadmaster.

PREFLIGHT.

EXTERIOR INSPECTION

1. Airplane Isolation - CHECKED

Check that the airplane is parked in a designated area and with acceptable separation distances.

2. Airplane Electrically Grounded - CHECKED

3. Main Landing Gear Wheel Chocks - IN PLACE

4. External Power - AS REQUIRED

Qualified maintenance personnel shall provide the necessary power sources for on-loading or off-loading operations.

5. APUs and ATMs - CHECKED

   a. Drains, Vents and Exhaust Ducts - CLEAR

   b. APU Oil Quantity - CHECKED

   c. APU Fire Extinguisher Bottle Pressure - CHECKED

   d. ATM Accumulators - CHECKED

Note

Step 5 need be accomplished only when the scanner has not completed an exterior inspection.

6. Cargo Doors - CHECKED

A visual condition check will be made on both fore and aft cargo door systems within a normal external movement pattern.

7. Entrance Door - POSITIONED

The crew entrance door and ladder may be positioned as required by normal/manual hydraulic procedures.

INTERIOR INSPECTION.

Flight Deck.

1. Flight Deck Ladder - POSITIONED

The flight deck ladder may be positioned as required by normal/manual hydraulic procedures.

*2. Form 781 - CHECKED

3. Internal Power - CHECKED

Check that the electrical/hydraulic power is available and adequate, with necessary interphone/PA Control Switches positioned.

4. Interior Lights - AS REQUIRED

5. ATMs - AS REQUIRED

6. Cargo Doors Armed - AS REQUIRED

Select the required arming position for the forward and aft doors, as required.

*7. Personnel Accommodations - CHECKED

   a. Relief Crew Bunks - CHECKED

   b. Lavatory - CHECKED

      (1) Ceiling and Advisory Lights - CHECKED

      (2) Water Tanks - CHECKED

      (3) Urinal - CHECKED

      (4) Modesty Curtain - CHECKED

      (5) Toilet Paper Holder - CHECKED

      (6) Toilet - CHECKED/SERVICED

      (7) Ash Tray - CHECKED

      (8) Waste Disposal - CHECKED

      (9) Soap Dish - CHECKED

      (10) Hot Water - CHECKED

      (11) Mirror - CLEAN

      (12) Paper Towel Dispenser - CHECKED

      (13) Portable Oxygen Bottle and Mask - CHECKED

   c. Seats - CHECKED

Check seat belts, ash trays, passenger info/emergency cards and life vests, if required.

*8. Crew Galley - CHECKED

   a. Water Tanks - CHECKED

   b. Refuse Container - CHECKED

   c. Paper Cup Dispenser - CHECKED

   d. Paper Towel Dispenser - CHECKED

   e. Can Opener - CHECKED

f. Stowage Cabinets - CHECKED

g. Refrigerator - CHECKED

Check that refrigerator is clean and operable.

h. Oven - CHECKED

Check that oven is clean and operable.

i. Warming Plate - CHECKED

Check that warming plate is clean and operable.

j. Food Warming Cup - CHECKED

Check that cup is clean and operable.

k. Water Cooler - CHECKED

Check that water cooler is installed, clean and operable.

l. Work Counter and Sink - CHECKED

Check that work counter, sink and sink drain are clean.

m. Hot Beverage Unit - CHECKED

Check that the unit is clean and operable.

*9. Right Hand Relief Crew Area - CHECKED

a. Fire Extinguisher - CHECKED

b. Portable Oxygen Bottle and Smoke Mask - CHECKED

c. Troop Oxygen System - CHECKED

(1) Oxygen Pressure - CHECKED

Check pressure on supply pressure gage (275-450 PSI).

(2) Test Switch - TEST

The oxygen on light will come on, all dome lights except flight station will come on bright, no smoking lights will come on, and warning horn will sound.

Note

Interphone contact will be established between flight deck, troop compartment and cargo compartment prior to the oxygen system check.

d. Oxygen Mask Container Tamper Indicators - OUT OF VIEW

e. Student/Instructor Seats - AS REQUIRED

f. Interphone Cord and Control Box - INSTALLED

10. Protective Clothing Kits - CHECKED

11. Protection From the Elements Kit - CHECKED

Cargo Compartment.

LEFT SIDE

1. Cargo Compartment Lights - AS REQUIRED

Lights may be checked within a normal movement pattern.

2. Emergency Escape Rope - CHECKED

*3. Door Lock Status Lights - CHECKED

a. Lamp Test - COMPLETED

*4. Loadmasters Forward Control Panel - SET

a. Ground Control Switch - COMPLT

b. Visor Operate Switch - OFF

c. Ramp Select Switch - OFF

d. Ramp Operate Switch - OFF

e. Ramp Adjust Switch - OFF

f. APU Fire Handles - IN

g. Fire Extinguisher Bottle Select Switch - NORMAL

h. ATM Hydraulic Pump Switch - OFF

i. Circuit Breakers - CLOSED

j. Winch Select Switch - OFF

k. Ramp Loading Ovhd Lights - ON/OFF

l. Ramp Loading Side ADJ Lights - ON/OFF

m. NLG Insp Light - OFF

n. Flt Sta Access Light - ON/OFF

o. Curb Lights - ON/OFF

p. Lamp Test Switch - TEST

*4A. Lamp Test - COMPLETED

Place the Lamp Test switch to TEST. On 68304, 68307, 70167 and 70170 through 00449 not modified by T.O. 1259, check that the armed light comes on. On 70168, 00450 and up and airplanes modified by T.O. 1259, check that the armed, ramp armed and roller fault lights come on. Release the switch to OFF. On 70168, 00450 and up and airplanes modified by T.O. 1259, place the switch to ROLLER FAULT EXTING to turn off the roller fault light.

*5. Cargo Doors Manual Override Valves - CHECKED

Check that the safety guard is on valve A.

6. Loadmasters Forward ADS Panel - SET

   a. Door Control Switch - OFF

   b. Lamp Test Switch - TEST/OFF

7. Interphone/PA Panel - SET

8. Snatch Block - CHECKED

9. Extraction Parachute Manual Release - STOWED

10. Tie Down Equipment - CHECKED

Inspect tiedown equipment for condition, storage and proper amounts. This equipment may be checked in a normal movement pattern.

*11. Stowage Box - CHECKED

a. Strut Limiter Bar - ONBOARD

b. Kneeling Collars - ONBOARD

c. Kneel Pad Extend Pin - ONBOARD

12. Floor Heat Intake Grills - CLEAR

13. Cargo Compartment Vents (F.S. 734 and 1219) - CHECKED

14. Interphone Cord and Winch Control Box - CHECKED (IF INSTALLED)

*15. Oxygen Manual Shut Off Valve - OPEN AND SAFTIED

16. Cargo Winch Support Beam - CHECKED

17. Cargo Compt Vent (F.S. 1779) - CHECKED

18. Stowage Box - CHECKED

a. Pallet Stops - CHECKED

b. Lug All Hoist - CHECKED

19. Emergency Escape Rope - CHECKED

20. Troop Door - CHECKED

Check troop door for proper operation and door warning light.

WARNING

Stand clear of door opening lever when operating the troop door unlock/lock handle.

21. Door Lock Status Indicator Panel - CHECKED

Check that all the not lkd and bypass lights are operable and all lights are off.

*22. Loadmasters Aft Control Panel - SET

a. Compartment Light Switches - AS REQUIRED

b. Lamp Test Switch - TEST

c. ATM Hyd Pump Switch - OFF

d. Ground Control Switch - COMPT

e. Aft Cargo Doors Switch - OFF

f. Ramp Select Switch - OFF

g. Ramp Operate Switch - OFF

h. Ramp Adjust Switch - OFF

i. ADS Press Door Switch - OFF

j. Air Defl Door Switch - OFF

k. Winch Select Switch - OFF

l. Ramp Loading Overhead Lights - ON/OFF

m. Ramp Loading Side ADJ Lights - ON OFF

n. Troop Compt Access Light - ON AS REQUIRED

o. Jump Platform Lights - AS REQUIRED

23. PA Control Panel - SET

24. IWBS Preflight Test - ACCOMPLISHED

The IWBS preflight test is accomplished by using the weight and balance computer self-test capabilities without any external equipment. In the event the computer should fail at anytime during the test, the test stops and maintenance must be accomplished. Electrical power should be on 15 minutes or longer prior to preflight tests. The following procedures are used to accomplish the test:

a. Press the TEST pushbutton and observe that the read and do not read lights come on.

b. Release the TEST pushbutton.

The do not read light will remain on and the read light will go off until the system nulls out. At this time, the do not read light goes off and the read light comes on. The gross weight shall read between 322,000 and 328,000 pounds or 247,000 and 253,000 pounds and the C.G. shall read between 24.7 and 25.3 percent.

Note

The computer servos remain active for approximately 45 seconds after any pushbutton is released.

Note

The test gross weight readout value is dependent on the signal level of the transducers as installed on a specific landing gear and the associated sensitivity potentiometer setting. Airplanes that could not be adjusted to 250,000 (±3,000) pounds test gross weight value are adjusted to 325,000 (±3,000) pounds. Either test value is satisfactory.

Note

Walkie-Talkie transmission in close proximity (approximately 10 feet) to the IWBS computer can cause fluctuations in IWBS readouts. Do not read while transmissions are in progress.

c. Rotate the Circuit selector to COMPT.

d. Press the Check pushbutton and observe the following:

(1) After the read light comes on and the counters approach the null position, the gross weight shall read between 247,000 and 253,000 pounds and the C.G. shall read between 24.7 and 25.3 percent.

Note

The servo-driven counters drift very slowly when within 1,000 pounds and 0.1 percent of null. Approximately 30 seconds is required for stability.

e. Rotate the KNEELING MODE selector switch to the position corresponding to the airplane's kneeling configuration. Use "UKN" for the "AFT" position.

f. Place the RAMP position selector switch to the corresponding position of the forward and aft ramps.

Note

When the KNEELING MODE selector is in the "UKN" position, there are no weight or C.G. corrections entered in the computer for the ramp positions.

g. Depress the WEIGH pushbutton.

When the READ light comes on, record the gross weight and CG readings:

On 00454, 00458 and up and airplanes modified by T.O. 1554, the IWBS limits with manual corrections are within ±7,500 pounds of actual gross weight and ±1.25 percent of MAC of actual CG.

(1) Aft Kneel - Subtract 15,000 pounds from the indicated gross weight.

(a) Aft Ramp at Drive-In - Subtract 15,000 pounds from the indicated gross weight and add 1.0 percent MAC to the indicated gross weight.

(2) Forward Kneel - Add 7,500 pounds to the indicated gross weight.

(a) Forward Ramp at Drive-In - Add 7,500 pounds to the indicated gross weight and subtract 1.0 percent MAC from the indicated CG.

On 68304, 68306, 68307, 70167, 70168, 70170 through 00453 and 00445 through 00457 not modified by T.O. 1554, the readings, depending upon the airplane kneeling configuration, should be within one of the following limits:

Note

When engines are operating, an IWBS error of between 5,000 and 15,000 pounds will occur and is normal. The system will be accurate when the engines are not operating.

(1) Unkneel - The gross weight reading shall be within ±7,500 pounds of the actual weight and the CG within ±1.25 of actual percent of MAC.

Note

If the NLG is turned when the airplane is static by using either nose gear steering or a tow bar, a large error in CG can occur. To clear the error, the nose gear wheels must rotate one turn or be rotated by kneeling the airplane.

(2) Aft Kneeling - The gross weight reading shall be within +22,500 to -7,500 pounds of the actual weight and the CG within +3.00 to -1.25 of actual percent of MAC.

Note

Use the UKN position of the KNEELING, MODE selector for aft kneeling of the airplane. Door and ramp positions other than stowed are uncompensated and additional errors will occur.

(3) Level Kneel - The gross weight reading shall be within ±10,000 pounds of the actual weight and the CG within ±1.5 of actual percent of MAC.

(4) Forward Kneel - The gross weight reading shall be within +7,500 to -15,000 of the actual weight and the CG within +3.00 to -1.25 of actual percent of MAC.

25. Interphone Cord and Control Box - CHECKED

*26. Cargo Doors Manual Override Valves - CHECKED

Check that the safety guard is over valve A.

27. Troop Compartment Ladder - POSITIONED

The troop compartment ladder may be positioned as required, by normal/manual hydraulic procedures.

*28. Aft Ramp and Pressure Door - CHECKED

Check for visual discrepancies, lock indicators and overall condition.

Cargo Compartment.

RIGHT SIDE.

1. Aft Winch and Location - CHECKED

Check for winch installation and operation. Insure that the winch compartment contains no foreign objects. Check for security of mount, and that the main power cable is connected. Check winch for electrical operation. Inspect condition or roller cable, hook and exit sheave. Check oil level.

2. Winch Control Panel - OFF

3. Troop Door - CHECKED

Check troop door for proper operation and door warning light.

WARNING

Stand clear of door opening lever when operating the troop door unlock/lock handle.

4. Emergency Escape Rope - CHECKED

5. Cargo Compartment Vent (F.S. 1779) - CHECKED

6. Stowage Box - CHECKED

Check contents for pallet stops.

7. Tiedown Equipment - CHECKED

Inspect tiedown equipment for storage, condition, and proper amounts. This equipment may be checked in a normal movement pattern.

8. Snatch Block - CHECKED

9. Cargo Compartment Vent (F.S. 1219) - CHECKED

10. Winch Control and Interphone Control Assembly - CHECKED (IF INSTALLED)

11. Cargo Winch Circuit Breakers (F.S. 876) - CLOSED

12. Cargo Compartment Vents (F.S. 734 and 594) - CHECKED

13. Snatch Block - CHECKED

14. Winch Select Switch - OFF

15. Interphone - CHECKED

16. Forward Winch and Location - CHECKED

Check for winch installation and operation, ensure that the winch compartment contains no foreign objects. Check for security of mount and that the main power cables are connected. Check winch for electrical operation. Inspect condition of roller, cable, hood and exit sheave. Check oil level.

*17. Forward Cargo Doors - CHECKED

Check doors for obvious visual discrepancies, ramp lock indicators, hydraulic leaks and overall condition.

18. Outboard Restraint Rails/Locks - CHECKED

Check that each lock is operable, free from debris, and unlocked when not in use.

19. Inboard Restraint Rails/Locks - CHECKED/ POSITION AS REQUIRED.

Check that each lock is operable and free from debris. Check rails for visual discrepancy and position as required.

20. Intermediate Roller Conveyors - CHECKED/ POSITION AS REQUIRED.

Insure the omni-directional roller - conveyors on the forward ramp extension are secured to ramp extension prior to closing ramp.

Troop Compartment.

1. Light Panel - CHECKED/SET

*2. Galley - CHECKED

a. Water Tanks - CHECKED

b. Refuse Containers - EMPTY/CLEAN

c. Paper Cup Dispenser - CHECKED/FULL

d. Paper Towel Dispenser - CHECKED/FULL

e. Can Opener - CHECKED/OPERABLE

f. Stowage Cabinets - CHECKED/STOCKED

g. Serving Trays - CHECKED/CLEANED

h. Refrigerators - CHECKED

Check that refrigerators are clean and operable.

i. Ovens - CHECKED

Check that ovens are clean and operable.

j. Warming Plate - CHECKED

Check that warming plate is clean and operable.

k. Food Warming Cup - CHECKED

Check that cup is clean and operable.

l. Hot Beverage Unit - CHECKED

Check that unit is clean and operable.

m. Work Counter and Sink - CLEAN

Check that work counter, sink and sink drain are clean.

n. First Aid Kits - CHECKED

o. Fire Extinguishers - CHECKED

3. Crash Axe - CHECKED

Note

Check items 4 through 7 within normal movement pattern of right and left sides of troop compartment.

4. Seats - CHECKED

a. Seat Belts - CHECKED

b. Ash Trays - CHECKED

c. Food Tray - CHECKED

d. Life Vest - CHECKED/IF REQUIRED

e. Head Rest Covers - CHECKED

f. Passenger Info/Emergency Cards - CHECKED

5. Reading Lights - CHECKED

6. Oxygen Masks - CHECKED

Check tamper indicators on drop-out oxygen mask panels.

7. Advisory and Ceiling Lights - CHECKED

8. Oxygen Bottles and Smoke Masks - CHECKED

9. No. 4 Escape Hatch - CHECKED/SECURED

a. Escape Rope - CHECKED

b. Emergency Exit Light - CHECKED

c. Escape Slide - CHECKED

Check retaining strap, quick release buckle, proper attachment to girt bar and air bottle, pressurized.

d. Life Raft - CHECKED

Check retaining strap, quick release buckle, inflation lanyard connected to airplane.

10. No. 3R Escape Hatch - CHECKED/SECURED

a. Escape Rope - CHECKED

b. Emergency Exit Light - CHECKED

c. Escape Slide - CHECKED

Check retaining strap, quick release buckle, proper attachment to girt bar and air bottle, pressurized.

d. Life Raft - CHECKED

Check retaining strap, quick release buckle, inflation lanyard, connected to the airplane.

11. First Aid Kits - CHECKED

12. Fire Extinguisher - CHECKED

*13. Lavatory Units - CHECKED

a. Water Tanks - CHECKED

b. Wash Basin and Faucets - CLEAN

c. Soap Dispensers - CHECKED/FULL

Check that dispenser is full and additional soap is available.

d. Mirrors - CLEAN

e. Toilet Paper Holders - CHECKED/FULL

Check that holder is full and additional toilet paper is available.

f. Toilets - CLEAN/SERVICED/OPERABLE

Check that toilets are clean, serviced, deodorized and operable.

g. Refuse Containers - EMPTY/CLEAN

h. Ash Trays - CLEAN

i. Ceiling and Advisory Lights - CHECKED

j. Portable Oxygen Bottle and Mask - CHECKED

Check that bottle is full and secured and that bottle and mask are serviceable.

k. Drop-out Oxygen Mask Panel - CHECKED

Check tamper indicators on panel.

14. No. 3L Escape Hatch - CHECKED/SECURED

a. Escape Rope - CHECKED

b. Emergency Exit Light - CHECKED

c. Escape Slide - CHECKED

Check retaining strap, quick release buckle, proper attachment to girt bar and air bottle, pressurized.

d. Life Raft - CHECKED (IF INSTALLED)

Check that the life raft is secured to the seat and the inflation lanyard is attached to the seat structure.

15. No. 6 Service Door/Escape Hatch - CHECKED /SECURED

a. Escape Rope - CHECKED

b. Emergency Exit Light - CHECKED

c. Escape Slide - CHECKED

Check retaining strap, quick release buckle, proper attachment to girt bar and air bottle, pressurized.

d. Life Raft - CHECKED

Check retaining strap, quick release buckle, inflation lanyard connected to airplane.

16. Interphone/PA Panel - SET/AS REQUIRED

Check operation of PA/Interphone system.

*17. Loose Equipment - STOWED

WARNING

Insure that no baggage or equipment is stowed on troop compartment floor grate or in the negative pressure relief valve cage.

18. Protective Clothing Kit - CHECKED

CARGO COMPARTMENT - SEAT KIT INSTALLED.

When cargo compartment palletized seat kit is installed, accomplish the following:

*1. Buffet/Lavatory Units - CHECKED

a. Water Tanks - CHECKED/FULL

b. Lavatories - CHECKED

(1) Lights - CHECKED/OPERABLE

Check that lights are operable.

(2) Advisory Signs - CHECKED/OPERABLE

Check that the advisory signs are operable.

(3) Wash Basins - CHECKED/CLEAN

Check that wash basins are clean.

(4) Soap Dispensers - CHECKED/FULL

Check that soap is in dispensers and that additional soap is available.

(5) Mirrors - CLEAN

(6) Paper Cup Dispensers - CHECKED/ FULL

Check that the paper cup dispensers are full and additional cups are available.

(7) Paper Towel Dispensers - CHECKED/ FULL

Check that the paper towel dispensers are full and extra towels are available.

(8) Refuse Containers - EMPTY/CLEAN

Check that refuse containers are empty and clean.

(9) Toilet Paper Holders - CHECKED/FULL

Check that toilet paper holder is full and that additional toilet paper is available.

(10) Portable Oxygen Bottle/Mask - CHECKED/FULL/OPERABLE

Check that portable oxygen bottle is full and that bottle and mask are operable.

c. Galleys - CHECKED

(1) Refuse Containers - EMPTY/CHECKED

(2) Stowage Cabinets - CHECKED/STOCKED

Check that the stowage cabinets are stocked with the necessary supplies.

(3) Refrigerators - CHECKED/OPERABLE/STOCKED

Check that the refrigerators are stocked with sufficient meals for the crew members and personnel to be carried in the cargo compartment on the mission, and that the refrigerators are operable.

(4) Ovens - CHECKED/OPERABLE/CLEAN

Check that the ovens are operable and clean.

(5) Food Warming Cup - CHECKED/OPERABLE/CLEAN

Check that the food warming cup is operable and clean.

(6) Hot Beverage Units - CHECKED/OPERABLE/CLEAN

Check that the hot beverage units are operable and clean.

(7) Paper Cup Dispensers - CHECKED/FULL

(8) Drinking Water Faucet - CHECKED/OPERABLE/CLEAN

(9) Auxiliary Work Counters - CHECKED/CLEAN/OPERABLE

Check that the auxiliary counters are clean and operable.

2. Seats - CHECKED

Check that ashtrays are clean and empty, that each seat contains a food tray and that seat belts are operable. Check seats for passenger info/emergency cards.

3. Oxygen Generators/Masks - CHECKED/NOT TAMPERED WITH/NOT EXPENDED

Red indicators should not be showing.

Check that oxygen generators are serviceable and not expended.

4. Advisory Signs - CHECKED/OPERABLE

Check that the advisory signs are operable.

5. Escape Slides - CHECKED

Check retaining strap, quick release buckle, proper attachment to girt bar, air bottle pressurized and hinge rail pop pin properly installed.

AIRPLANE PREPARATION FOR LOADING.

1. Placard Airplane - AS REQUIRED

Note

The military host is responsible for placarding airplane. When mission operates on non-military installations, briefing by the airplane commander will include placarding requirements and, if required, placards will be supplied at the onload base. When parked in other than a designated restricted, posted, and traffic controlled loading area, placards will be displayed in conspicuous manner covering all approach angles.

2. Loading Equipment, as Applicable - AVAILABLE

Determine that loading equipment is available.

3. Loading Crew - BRIEFED

Brief loading crew on loading sequence and loading signals.

4. Determine Airplane Kneeling Position - DETERMINED

Determine the best kneeling position for loading specific cargo and/or vehicles.

5. Kneel the Airplane, as Applicable - KNEELED

Kneel the airplane to the determined loading position.

6. Parking Brakes - SET

7. Doors and Ramps - AS REQUIRED

8. Cargo Floor Configuration - CONFIGURED

Configure cargo floor for as applicable, palletized, general bulk, skidded and/or vehicle cargo loads.

a. Floor Rollers - POSITIONED

•9. Security Guards - AS REQUIRED

Ensure a minimum of two security guards are posted.

•10. Fire Department - NOTIFIED (IF REQUIRED)

Notify the fire department of time to start loading and items to be loaded.

•11. Fire Extinguishers - POSITIONED

One ten gallon CB or two 50-pound capacity CO_2 extinguishers are required.

PORTABLE DOCK OPERATION.

After the airplane is forward kneeled, the loadmaster shall perform cargo handling procedures IAW T.O. 1C-5A-9CL-1.

1. Airplane Preparation - CHECKED

2. Loading Personnel - POSITIONED

3. Cargo On/Off Load - COMPLETED

Perform cargo handling procedures IAW T.O. 1C-5A-9CL-1 and when clear, continue with the After Loading checklist.

LOADING.

Refer to T.O. 1C-5A-5, T.O. 1C-5A-9, T.O. 1C-5A-9CL-1, T.O. 1C-5A-16 and T.O. 1C-5A-1CL-4, for loading isntructions. Detailed information related to cargo handling and loading may be found in publications listed under Reference in Section I of T.O. 1C-5A-9.

WARNING

Do not place any cargo, baggage or equipment directly against a curb light because the intense heat generated by this light may cause a fire.

PERSONNEL LOADING.

Troops/Passengers will be loaded IAW T.O. 1C-5A-9CL-1.

TROOP BRIEFING.

FLIGHT DECK AND TROOP COMPARTMENT DEPARTURE BRIEFING.

Note

This briefing will be required for all troop/passenger departures.

1. May I have your attention please. Welcome aboard MAC flight _____. Our next stop will be _____. Estimated flying time is _____ hours/minutes.

2. At this time bring your seats to the upright position. Throughout the flight, please comply with the instructions of the personnel advisory signs located (indicate location). Smoking is permitted only while seated.

3. Because of the fire hazards, cigarette lighters fueled with propane, butane methyl alcohol, or a type containing a fluid fuel reserve in a see-through plastic reservoir, will not be used aboard Air Force airplanes. Additionally, the use of electronic devices, other than hearing aids, is prohibited.

4. Restrooms are located in the forward part of this compartment. Door locks are provided for your privacy.

5. In accordance with current directives, passengers are not permitted entry to the flight station or authorized access to checked baggage.

6. Although we do not anticipate an emergency, we would like to advise you on the following special equipment and procedures.

7. If loss of cabin pressurization should occur during flight, a warning horn will sound, lights will brighten and oxygen masks will drop from this overhead panel. At this time, extinguish your smoking materials, pull down firmly on the nearest mask, place the mask over your nose and mouth and adjust the head strap as is now being demonstrated. (Demonstrate with mask/assembly).

8. All emeregncy exits in the airplane are clearly marked along the airplane sides. Inflatable escape slides are near each exit.

9. Each seat is provided with a life vest located (indicate location). The life vest is donned as is now being domonstrated. (Demonstrate donning the life vest).

10. Complete information on exits, equipment and procedures are contained in the information card provided with your seat. Please review this card now.

11. For the protection of your hearing, we have disposable type ear plugs for issue upon request. If there are any questions concerning the flight, don't hesitate to ask them.

CARGO COMPARTMENT DEPARTURE BRIEFING.

Note

This briefing will be required for all troop/passenger departures.

1. May I have yout attention please. Welcome aboard MAC flight _____. Our next stop will be _____. Estimated flying time is _____ hours/minutes.

2. At this time bring your seats to the upright position. Please fasten your seat belts and remain seated with belts fastened until we have reached cruise altitude.

3. Smoking is not permitted during takeoff, landing or ground operations. You will be advised when it is safe to smoke. Smoking is permitted only while seated.

4. Because of the fire hazards, cigarette lighters fueled with propane, butane, methyl alcohol, or a type containing a fluid fuel reserve in a see-through plastic reservoir, will not be used aboard Air Force airplanes. Additionally, the use of electronic devices other than hearing aids, is prohibited.

5. Restrooms are located in the forward part of this compartment. Door locks are provided for your privacy.

6. In accordance with current directives, passengers are not permitted entry to the flight station or authorized access to checked baggage.

7. Although we do not anticipate an emergency, we would like to advise you on the following special equipment and procedures.

8. If loss of cabin pressurization should occur during flight, a warning horn will sound and lights will brighten. Reach under your seat, grasp the yellow cap and pull it straight out at arms length. At that time, extenguish your smoking material, place and hold the mask over your nose and mouth and adjust the head strap as being demonstrated. (Demorstrate with mask/assembly used in the cargo compartment palletized kit.)

Note

On airplanes modified by T.O. 1387, include the following in the briefing.

9. If it becomes necessary to discharge the cargo compartment fire suppression system, there will be loud reports from the overhead area as the discharge squibs are fired. If this occurs, extinguish your smoking materials and don your oxygen masks.

WARNING

When the FE1301 agent is discharged into the cargo compartment, restrictions to visibility can exist throughout the cargo compartment for approximately two minutes. The visibility is so restricted that personnel movement would probably result in personal injury, and personnel being airlifted in the cargo compartment could be unable to don the individual oxygen masks located under the seats. If time and conditions permit, troops being airlifted in the cargo compartment should be instructed to don oxygen masks prior to discharge of the FE1301 agent.

Note

After using the chemical oxygen generators, have the troop/passengers hang their masks over their arm rests until the generators have cooled.

10. Emergency exits are clearly marked along the airplane sides. Inflatable escape slides are near both aft side troop doors.

11. (For overwater flight). In the event of a ditching emergency, don the life vest located (give location), take your seat and fasten your seat belt securely. The life vest is donned (in this manner) (as is being demonstrated by _____). Do not inflate the vest inside the airplane.

12. For the protection of your hearing, we have disposable type ear plugs for issue upon request. If there are any questions concerning the flight, don't hesitate to ask them. Thank you.

AFTER LOADING.

Selected actions may be performed simultaneously by additional aircrew members or loadmaster.

1. Cargo Placards - ATTACHED (AS REQUIRED)

Attach required placards to designated cargo.

2. Cargo Winch - STOWED

3. Cargo Doors - CLOSED

4. Unkneeling - COMPLETED

*5. Cargo Restraint - CHECKED

Verify cargo restraint pallets, locks positioned and security of special handling equipment.

*6. Loose Equipment - SECURED

Insure that all baggage, equipment and loose items are secured or stowed for flight. Loose items and professional gear not required for immediate use and not secured for flight that may cause injury or damage will not be place in the coat closet or postioned where they may become projectiles if a rapid deceleration occurs.

*7. Curb Lights - OFF

*8. Weight and Balance - COMPUTED

Determine weight and balance data with IWBS or compute on DD Form 365F. Provide necessary data to the flight engineer. Ensure weight and balance data entered on Form 365F has supporting authority (cargo weight compared with load manifest, number of passengers with passenger manifest and number of crew members with flight orders).

After completing the IWBS computer self-test, accomplish the following:

a. Rotate the Kneeling Mode switch to agree with the airplane kneeling position.

b. Place the Ramp position switches to agree with the forward and aft position of the ramps.

c. Depress the Weigh pushbutton.

The do not read light stays on for approximately 30 seconds until the servo indicators reach the proper readings.

d. When the read light comes on and the indicator stabilizes, record the C.G. and gross weight in percent of MAC and in pounds.

This weighing procedure may be accomplished at any time during and after loading.

*9. Fleet Service Supplies - CHECKED/STOWED

*10. Load Documents - Checked

Insure correct load manifests, special handling forms and nexessary border clearance documents are aboard for the mission. Ensure that cargo weight compares with load breakdown sheet and the number of passengers compares with the number manifested.

*11. Airplane Commander - BRIEFED

Brief Airplane Commander on load data: special handling requirements, cargo jettisoning, personnel briefing, and complete weight and Balance forms as necessary.

BEFORE STARTING ENGINES.

1. Airplane Placards - REMOVED (AS REQUIRED)

2. Breather Device(s) - REMOVED (AS REQUIRED)

*3. Stowaway Check - COMPLETED

The troop compartment loadmaster will perform a stowaway check of the troop compartment commencing at the center wing area and proceeding aft. The aft flight deck loadmaster will check the environmental compartment, the courier compartment and the aft flight deck to include the latrine, bunk rooms and avionics compartment. The aft flight deck loadmaster will then proceed to the cargo compartment where he and the cargo compartment loadmaster will perform a cargo compartment stowaway check. This check will start with the area behind the forward ramp extension, with each loadmaster then proceeding down the cargo compartment, one on each outside aisle, inspecting each pallet and the spacing between each pallet until reaching the aft end of the cargo compartment.

*4. Doors and Hatches - CLOSED/LOCKED

*5. Airplane Sprayed - AS REQUIRED

Spray flight deck, troop compartment, and cargo compartment with aerosol insecticide. Spraying will be accomplished after all personnel are onboard and all doors and hatches are closed.

*6. Cargo Compartment Side Wall Heat Vents, Left Side (F.S. 750, 1100 and 1750) - UNOBSTRUTED

7. Troop Compartment Stairwell Gate - CLOSED/LOCKED

*8. Oxygen - CHECKED

Assure oxygen mask is attached to a walkaround bottle and readily available for use.

*9. Headset - DONNED

*10. Crew Start Report - "TROOP COMPARTMENT READY,____ TOTAL/_____ CREW" (LM); "CARGO COMPARTMENT READY,____ TOTAL/____ CREW" (LM); "AFT FLIGHT DECK READY,_____TOTAL/CREW" (LM)

The loadmaster in each compartment will respond with the total number of personnel and crew members

in that compartment. The aft flight deck loadmaster will include all personnel on the flight deck and the scanner in his personnel count (i.e., "Aft flight deck ready, 18 total/8 crew"). This indicates 18 personnel will occupy the flight deck, 8 of which are crew members.

BEFORE TAXI.

1. Crew Taxi Report - "TROOP COMPARTMENT, READY" (LM); "CARGO COMPARTMENT, READY" (LM); "AFT FLIGHT DECK, READY" (LM)

Response from the loadmasters from the applicable compartment indicates that the compartment is ready and the Before Taxi Checklist is complete.

BEFORE TAKE-OFF.

*1. Safety Belt - FASTENED

The loadmaster(s) will visually check all passenger seat belts to assure they are properly fastened. The loadmaster(s) shall then be seated in designated seats and fasten their seat belts.

*2. Crew Takeoff Report - "TROOP COMPARTMENT, READY" (LM); "CARGO COMPARTMENT, READY" (LM); "AFT FLIGHT DECK, READY" (LM)

Response from the loadmasters from applicable compartments indicates the compartment is ready and the Before Takeoff checklist is completed.

IN FLIGHT.

1. Oxygen - CHECKED

2. Interphone Clearance - OBTAINED

Request permission from airplane commander to go off interphone and establish/PA system for contact as required.

3. Restraint - CHECKED (AS REQUIRED)

Check restraint and tiedowns for tension and security of attachment after takeoff and periodically during flight.

4. Cargo - CHECKED (AS REQUIRED)

Check cargo periodically for leakage and fumes.

In the event cargo is found to be leaking refer to T.O. 1C-5A-23 and T.O. 42C-1-14 for cleanup of corrosive spills.

5. Personnel Comfort - AS REQUIRED

Offer beverages, meals, earplugs, etc. as appropriate. Check the condition of lavatory and lavatory supplies.

6. Load Planning - COMPLETED

Complete planning for offload/on load.

7. Border Clearances - AS REQUIRED

Distribute customs, immigration, agriculture and public health forms, as required. Assembly required forms and documents for delivery to appropriate officials.

8. Mission Documents - AS REQUIRED

Complete necessary inflight reports, messages, and documents. Coordinate with other aircrew members for necessary data, as required.

INFLIGHT BRIEFING.

Note

All inflight briefings will begin with "May I have your attention please," followed by a short information statement of general interest to the passengers and ending with "Thank you."

CRUISE BRIEFING.

Note

The loadmaster will give the following briefing after take off when the fasten seat belt light is turned off.

"May I have your attention please. Our present flight altitude is _____ feet. Throughout the flight, when seated, we request that you wear your seat belt loosely fastened. Thank you."

MEAL BRIEFING.

"May I have your attention please. In approximately _____ minutes, we will begin serving meals. Please have the meal receipt, which was issued with your boarding pass, ready for collection. We ask that you remain seated as much as possible until everyone has been served. Please bring your seats to the upright position and place the tray, located in the pocket of the seat in front of you, in the arm rest of your seat."

DESCENT.

1. Pilot Alerts Aft Flight Deck, Troop Compartment and Cargo Compartments for Descent - ALERTED

2. Restraint - CHECKED (AS REQUIRED)

3. Cargo - CHECKED (AS REQUIRED)

Check for leakage and fumes.

4. Personnel - AS REQUIRED

Ensure all personnel are seated, secured, and briefed. The loadmaster will visually check all passengers' seat belts to ensure that they are properly fastened.

5. Loose Equipment - SECURED

6. Airplane Form 781 - DISCREPANCIES ENTERED

7. Perishables - AS REQUIRED

Collect all fresh fruit, cores, peels, and vegetables and other perishables and place in container for the Agriculture Inspector.

8. Headset - DONNED

DESCENT BRIEFING.

Note

The loadmaster will give the first portion of the descent briefing when the fasten seat belt light comes on.

"May I have your attention. We have started our descent for landing at _____. The local time is _____. The temperature is _____; and the weather is _____ (snow, rain, fair, etc). Please observe the personnel advisory sign. Thank you."

Note

The loadmaster will give the second portion of the descent briefing when the no smoking light comes on.

"May I have your attention. Please bring your seats to the upright position and observe the personnel advisory signs. Thank you."

Engines Running, On/Offload.

Engine running offload will normally be conducted through the forward ramp and door except in the case of an engine running onload whereby cargo will be loaded through the forward doors and offloaded through the rear doors. When engines running on/offload is performed, the loadmaster will brief all personnel regarding their locations, duties, and responsibilities as follows:

a. Vehicle Operators:

(1) They will be directed to assume their positions during kneeling operations and that engines will be started only after the airplane doors and ramps are open and when the loadmaster directs.

(2) They will follow exact offload procedures and hand signals. Drivers will insure the brakes are operational prior to movement.

(3) That vehicles move only under loadmaster's direction and signals.

(4) That vehicles must move at least 150 feet away from the airplane before turning, at least 300 feet before stopping, and as directed by ground marshallers.

b. Troops:

(1) Will wear ear protection.

(2) Insure that their baggage is secured in vehicles.

(3) Will assist in removing restraint chains upon direction of the loadmaster.

CAUTION

All restraint will be removed from vehicles except one forward and one aft, provided drivers are in position and vehicle brakes are set. This restraint removal will be accomplished while the airplane is being kneeled.

(4) Will exit the airplane after all the vehicles are offloaded. They will proceed straight out of airplane at least 150 feet before turning, 300 feet before stopping and as directed by ground marshallers. Marshallers will be identified by distinctive clothing so that drivers and personnel can make positive identification and follow signals.

BEFORE LANDING.

1. Seat Belt - FASTENED

*2. Crew Landing Report - "TROOP COMPARTMENT, READY" (LM: "CARGO COMPARTMENT, READY" (LM); "AFT FLIGHT DECK, READY" (LM)

Response from loadmasters from applicable compartment indicates the compartment is ready and the Descent and Before Landing checklists are complete.

AFTER LANDING BRIEFING.

Note

Only the first portion of the briefing is required at terminating stations.

"Please remain seated until the airplane and all engines have come to a complete stop. A passenger service representative will escort you to the passenger terminal. Take all unchecked baggage and personel effects with you when deplaning. Passengers terminating at this station may claim their checked baggage in the terminal.

Thru passengers are requested to remove any personel items of value from the airplane. There will be a _____ hour ground time at this station. Thank you."

AFTER LANDING.

1. Monitor Bus - OVERRIDE/AS REQUIRED

Coordinate with the flight engineer for necessary electrical power.

2. Border Clearances - COMPLETED

Customs, immigration, agricultural and health clearances completed, when required.

3. Kneel Mode - AS REQUIRED

Perform necessary coordination and clearances to position the airplane in the required kneeling mode. Steps 4 and 5 may be performed prior to or after steps 2 and 3 as determined by the loadmaster.

4. Cargo Doors - AS REQUIRED

Position cargo doors and ramps as required.

5. Personnel - OFF-LOADED (AS REQUIRED)

Ensure that personnel are safely conducted from the airplane by appropriate personnel.

6. Airplane Placards - POSITIONED (AS REQUIRED)

7. Airplane Electrically Grounded - CHECKED

•8. Security Guards - BRIEFED AND POSTED

•9. Fire Extinguishers - POSITIONED

One 10 gallon CB or two 50-lb capacity CO_2 extinguishers are required.

10. Stabilizer Struts - AS REQUIRED

11. Ramp Extension Jacks - AS REQUIRED

•12. Fire Department - NOTIFIED

Ensure two-way tower communication if fire fighting vehicle is not positioned at the airplane during off loading.

13. Off-loading Crew Duties - ASSIGNED

14. Before Loading Checklist - ACCOMPLISHED (AS REQUIRED)

15. Cargo - AS REQUIRED

Complete cargo handling in accordance with detailed procedures in T.O. 1C-5A-9CL-1.

BEFORE LEAVING AIRPLANE.

1. Cargo Winch - STOWED

2. Tiedown Equipment - STOWED/IN USE

3. Cargo Compartment Vents - CLOSED/IN USE

4. Restraint Rails - AS REQUIRED

Position restraint rails to the most advantageous configuration for personnel movement safety.

5. General Cleanliness - CHECKED

Insure cargo handling personnel remove obvious cargo debris and/or place it in trash containers. Notify appropriate personnel for detailed cleaning when required.

6. Cargo Doors - AS REQUIRED

Position cargo doors and ramps to the best position for weather conditions and safety.

7. Kneel MODE - AS REQUIRED

8. Electrical/Hydraulic Power - AS REQUIRED

Insure all cargo handling systems electrical and hydraulic control switches are turned off when no longer required. Turn off all unnecessary troop and cargo compartment light control switches.

9. Airplane Operations - COMPLETED

Coordinate with appropriate personnel to indicate airplane is secure and operational usage is complete.

SCANNER.

The scanner will be designated by the command concerned and can relieve the flight engineer during periods of prolonged flight, and is also responsible for assisting in the Aircrew Visual Inspection, engine start, and maintaining an alertness for airplane malfunction during taxi, take-off, and flight. Normally the scanner will occupy a seat on the flight deck during take-off and landing. If in the Cargo compartment during take-off or landing, he will occupy a seat with seat belt fastened and be on interphone.

Note

Additional personnel may be assigned to accomplish the scanner's duties during subsystem operations. These personnel will assist in kneeling/unkneeling the airplane and clearing the area of obstructions and personnel during door operations. They may be assigned from qualified aircrew and/or maintenance personnel. They will operate under the supervision of the subsystem operator. For ease in identification, additional scanners will be designated by physical location of the airplane area they are scanning (e.g., left scanner, right scanner, forward or aft scanner).

NORMAL PROCEDURES

The scanner is responsible for the following in addition to duties outlined in Sections II and III:

1. Assist the flight engineer in a complete visual inspection prior to starting engines.

2. Perform exterior duties during engine starts, clearing engines, removing chocks, landing gear pins, and external power when directed by the pilot.

3. Observe airplane and engines for evidence of fuel leaks or malfunctions before take-off and during climb. Report observations to the pilot or flight engineer.

4. Maintain periodic observation of the wings, engines, and control surfaces throughout the flight.

5. Assist the Loadmaster to ensure that troops, cargo, and equipment are secure prior to take-off and landing.

6. Perform exterior duties during securing of airplane.

7. Perform other duties as directed by the pilot.

SECTION V
OPERATING LIMITATIONS

Table of Contents

INTRODUCTION 5-1
MINIMUM CREW REQUIREMENTS 5-1
INSTRUMENT MARKINGS 5-1
ENGINE LIMITATIONS 5-5
TIRE LIMITATIONS 5-10
WEIGHT LIMITATIONS 5-10
CENTER OF GRAVITY LIMITATIONS 5-10
CARGO LOADING LIMITS 5-15
LIMITATIONS FOR OPERATION IN ICING CONDITIONS 5-15
FUEL SYSTEM LIMITATIONS 5-15
LIMITATIONS FOR OPERATION WITH SLATS RETRACTED 5-15
LIMITATIONS FOR OPERATION WITH INOPERATIVE EMERGENCY RUDDER TRIM . 5-17
AERIAL REFUEL SYSTEM LIMITATIONS . . 5-17
GROUND OPERATION LIMITATIONS 5-17
AIRSPEED LIMITATIONS 5-18
MANEUVER LOAD LIMITS 5-20
BANK ANGLE LIMITS 5-20
ATTITUDE LIMITS BELOW 200 FEET 5-20
FLIGHT LIMITATIONS 5-20
STALLIMITER SYSTEM LIMITATIONS . . . 5-20
VISOR DOOR LIMITATIONS 5-23
AFT CARGO DOOR SYSTEM LIMITATIONS. . 5-23
AIRDROP LIMITATIONS 5-23
DROP WEIGHT LIMITATIONS 5-23
CENTER OF GRAVITY LIMITATIONS 5-23
FORWARD SUPPORT AREA LIMITATIONS 5-24
ACCELERATION LIMITATIONS 5-24
BRAKE LIMITATIONS 5-24
LIMITATIONS FOR OPERATION WITH PARTIAL BRAKES INOPERATIVE 5-24
WIND GUST LIMITATIONS 5-25
AVIONICS EQUIPMENT LIMITATIONS 5-25

INTRODUCTION.

Section V covers all important limitations that must be observed during normal operation of the airplane and engines. Structural limitations presented are required to maintain the loads imposed on the airplane within 80 percent of the design load levels. These limitations must be observed until completion of structural static tests and flight demonstration tests. It is not to be construed that Section V contains ALL limitations, as some limitations are covered in sections dealing with that particular specialized phase of flight. Conversely, the instrument markings illustration should be closely studied for area of normal operation and limitations, as these limitations may not be mentioned in other sections of the book. The operating limitations contained in this section take precedence over all other limitations mentioned elsewhere in this manual.

MINIMUM CREW REQUIREMENTS.

The minimum flight crew to fly the airplane under normal non-tactical conditions will consist of a pilot, copilot, flight engineer, and scanner. Additional crew members, as required, will be added at the discretion of the commander.

INSTRUMENT MARKINGS.

(See figure 5-1.)

INSTRUMENT MARKINGS — ALL APPROVED FUEL GRADES

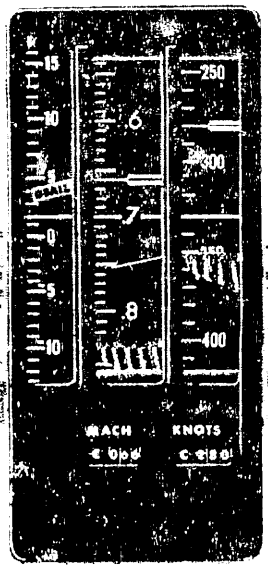

MACH

0.825 Recommended ⚠1

AIRSPEED

350 Recommended ⚠1

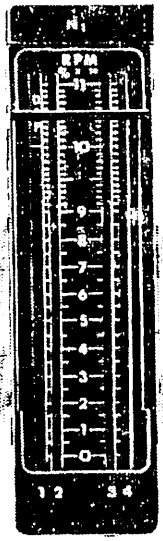

ENGINE TACHOMETER (N_1)

17 to 106% - Normal Operation

106% - Maximum

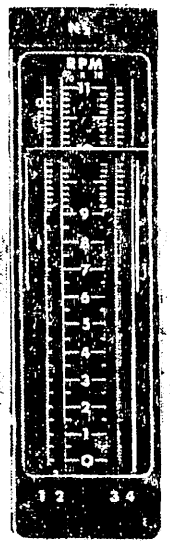

ENGINE TACHOMETER (N_2)

61 to 100% - Normal Operation

100% - Maximum

TURBINE INLET TEMPERATURE

220 to 820°C - Normal Operation

820 to 850°C - Caution (30 Minutes Maximum)

850 to 890°C - 5 Minutes Maximum

890°C - Maximum ⚠2

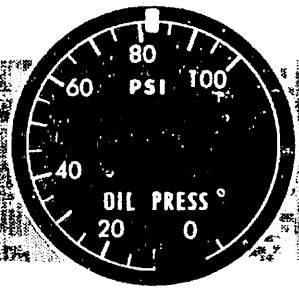

ENGINE OIL PRESSURE

10 PSI - Minimum

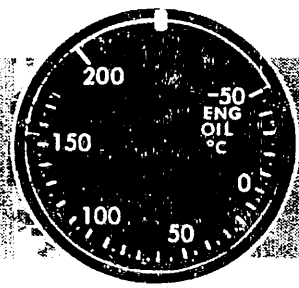

ENGINE OIL TEMPERATURE

-50 to 177°C - Normal Operation

177°C - Maximum

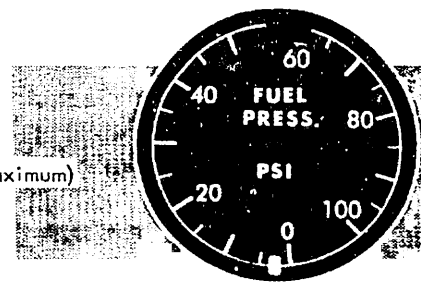

FUEL MANIFOLD PRESSURE

55 PSI - Maximum

NOTE

⚠1 Refer to Airspeed Limitations ⚠2 Refer to Note 3 of TIT Limitations

C5A-1-X3/0-112-1

Figure 5-1. (Sheet 1 of 3)

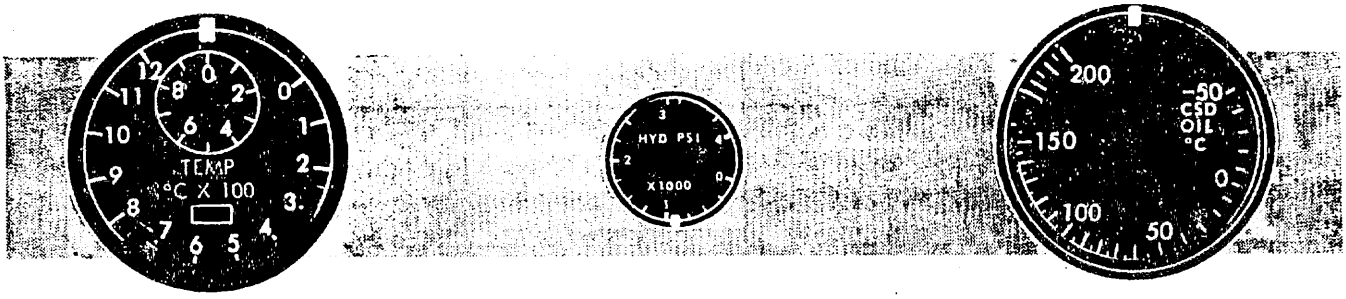

APU EXHAUST GAS TEMPERATURE INDICATOR

- 240 to 691°C - Normal Operation
- 691 to 715°C - Caution
- 715°C - Maximum

HYDRAULIC PUMP PRESSURE INDICATOR

- 2850 to 3150 PSI - Normal Operation
- 3400 PSI - Maximum

CSD OIL TEMPERATURE

- -50 to 135°C - Normal Operation
- 135 to 160°C - Caution
- 160°C - Maximum

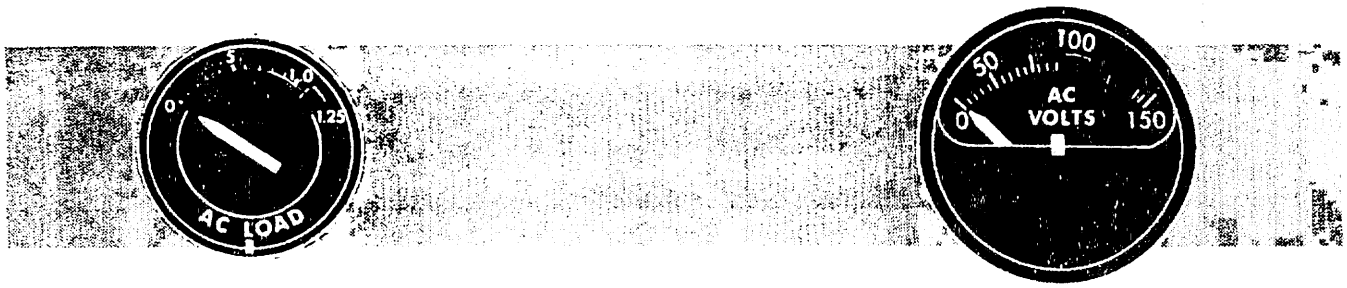

AC LOADMETER

- 0 to 1.0 - Normal Operation
- 1.0 to 1.1 - Caution
- 1.1 - Maximum

AC VOLTMETER

- 109 Volts - Minimum
- 109 to 122 Volts - Normal Operation
- 122 Volts - Maximum

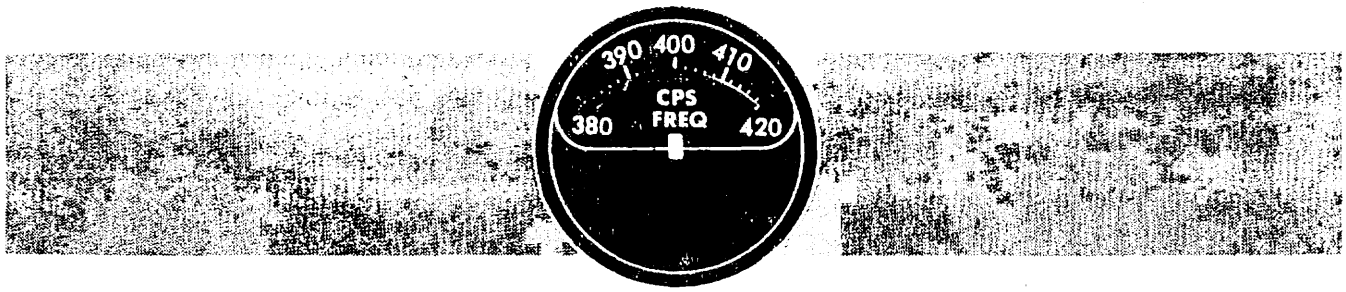

FREQUENCY METER

- 380 CPS - Minimum
- 380 to 394 CPS - Caution
- 394 to 406 CPS - Normal Operation
- 406 to 420 CPS - Caution
- 420 CPS - Maximum

C5A-1-7-112-2

Figure 5-1. (Sheet 2 of 3)

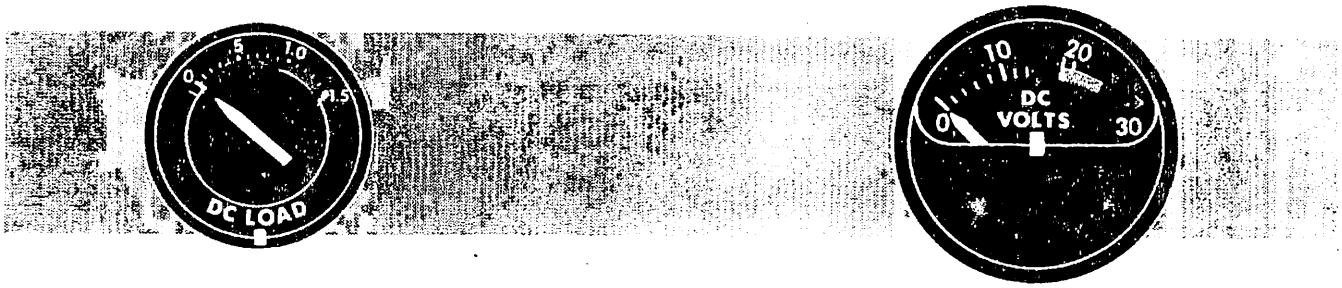

DC LOADMETER

- 0 to 1.0 - Normal Operation
- 1.0 to 1.5 - Caution
- 1.5 - Maximum

DC VOLTMETER

- 19 Volts - Minimum
- 19 to 25 Volts - Caution
- 25 to 30 Volts - Normal Operation
- 30 Volts - Maximum

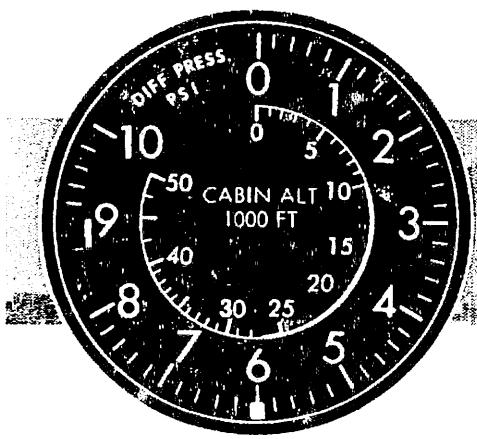

CABIN DIFFERENTIAL PRESSURE INDICATOR

- 10,000 to 25,000 Ft - Caution
- 25,000 Ft - Maximum
- 8.2 to 8.7 PSI - Caution
- 8.7 - Maximum

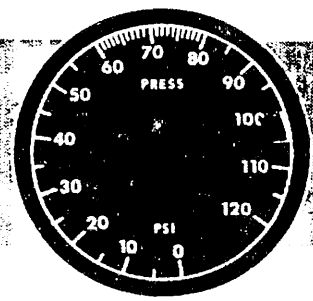

MANIFOLD PRESSURE GAGE

- 100 PSI Maximum

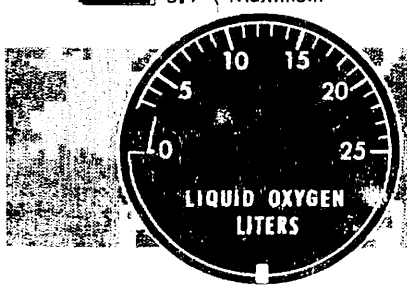

25-LITER LIQUID OXYGEN QUANTITY INDICATOR

- 2.5 Liters - Minimum

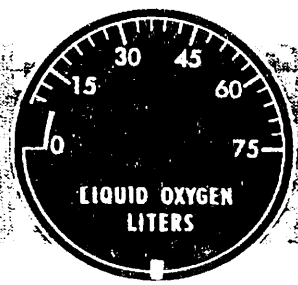

75-LITER LIQUID OXYGEN QUANTITY INDICATOR

- 7.5 Liters - Minimum

C5A-1-XI/0-112-3

Figure 5-1. (Sheet 3 of 3)

ENGINE LIMITATIONS.

STARTER LIMITATIONS.

Starter duty cycles are as follows:

(1) One minute on, 30 seconds off

One minute on, 30 seconds off

One minute on, 30 minutes off

(2) Two minutes on, five minutes off for any number of cycles.

TIT LIMITATION.

THRUST SETTING	TIME-MINUTES	MAXIMUM OBSERVED TIT (°C)
TRT-STATIC/ TRT-INFLIGHT	5	890 ③
MILITARY	30	850
NORMAL RATED	CONTINUOUS	820
IDLE	CONTINUOUS	370 to 510 ①
STARTING ②	25 SECONDS	800 to 860
	2 SECONDS	Over 860
TRANSIENT	30 SECONDS	910 to 915
MAXIMUM REVERSE THRUST	30 SECONDS	890

① This range for TIT is not a limit but is given to indicate a possible engine malfunction.

② If TIT exceeds limits, discontinue the start and record as a hot start.

③ The steady state TIT limit of 890° C may be exceeded transiently to a maximum value of 910° C over a total duration of up to two minutes following the setting of TRT-STATIC or TRT-INFLIGHT only. The two minute transient must be included in the five minutes allowed for take-off power.

ENGINE ANTI-ICE LIMITATIONS.

The engine anti-ice system shall not be operated while at take-off power at ambient temperatures of 10° C and above.

FUEL HEATER LIMITATIONS.

Do not operate the fuel heater during take-off.

Do not turn on the fuel heater when operating on aviation gasoline while the indicated fuel temperature is above 60°C.

THRUST REVERSER LIMITATIONS.

For ground operation, between 150 and 60 KCAS, the thrust reversers are limited to takeoff rated thrust. Do not exceed idle reverse thrust below 60 knots except in an emergency. A fan blade inspection is required after each maximum reverse operation below 60 knots.

Note

When operating on substandard runways, dust ingestion into the engines may occur at speeds up to 100 knots with engine power above reverse idle and below 20 knots at reverse idle. Dust ingestion should be reported by the flight crew. Further investigation should be conducted by maintenance personnel to determine the internal effects on the engines.

Do not operate outboard thrust reversers in flight. Do not move the inboard throttles to the reverse thrust idle detent until the engines decelerate to idle RPM. Do not operate inboard thrust reverser in flight at reverse thrust settings beyond reverse idle. Do not advance inboard throttles beyond idle in flight when the inboard thrust reversers are in any transient reverse thrust position. Do not operate the outboard engines at power settings greater than flight idle with the inboard thrust reversers deployed. Do not exceed reverse thrust limiter settings shown in Part 2 of T.O. 1C-5A-1-1.

WARNING

Do not extend inboard thrust reversers in flight while the flaps are deployed as large changes in airplane lift will result, particularly at speeds associated with traffic pattern and final approach operations.

OIL PRESSURE OPERATING RANGES.

10 PSI Minimum.

Note

The following values are not limits but represent the normal range of a stabilized engine and are given as a guide to indicate a possible engine malfunction.

Idle	10 to 22 PSI
80% N_2	20 to 30 PSI

Note

Oil pressure indications outside the above ranges should be reported by the flight crew. Further investigation should be conducted by maintenance personnel to isolate the cause of the pressure deviation.

OIL CONSUMPTION.

Two pounds (1.1 quart) per hour maximum at the home station. Four pounds per hour maximum during enroute missions. An additional two pounds per mission is allowed to compensate for servicing inaccuracies.

Note

If at enroute stops, the oil consumption has exceeded 2 pounds per hour but is less than 4 pounds per hour, the engine should be inspected for leaks and repaired as necessary. If no leaks are found, continue the mission.

ENGINE RPM LIMITS.

The (N_1) overspeed limits is 106 percent. The (N_2) RPM limit is 100 percent. The normal (N_1) at idle is 17 to 29 percent. The normal (N_2) at idle is 61 to 66 percent. The N_1 and N_2 idle speeds given are not limits but are given as a guide to indicate a possible engine malfunction.

During take-off or ground static operation, do not operate engines with N1 RPM between 78 to 84 percent except for transients.

MADAR ENGINE VIBRATION LIMITS.

Core Engine(N_2).

If the core vibration level is over 2 but less than 5 scope divisions peak-to-peak amplitude at 80 percent N_2, continue to operate the engine and avoid continuous operation at 80 percent N_2.

If the core vibration level is over 5 scope divisions at 80 percent N_2, a precautionary engine shutdown will be accomplished.

Fan (N_1).

If the fan vibration level is between 1 and 2 scope divisions at 80 percent N_1, avoid continous operation at 80 percent N_1.

If the fan vibration level is over 2 scope divisions, accomplish a precautionary engine shutdown.

Whole Engine.

Avoid continuous engine operation at power settings where whole engine vibration amplitudes of 2-1/2 scope divisions are exceeded. If engine operation cannot be continued within this limit, accomplish a precautionary engine shutdown.

FUEL LIMITATIONS.

The engine will perform satisfactorily using recommended or alternate fuel and may be operated for limited time periods using the emergency fuel. Refer to figure 5-2 for applicable specifications and NATO symbols of fuels that may be used.

Recommended Fuel.

The recommended fuel is JP-4 (Specification MIL-T-5624) and its NATO equivalent F40. If fuel is required at a field where the recommended fuel is not available, certain other fuels may be used as alternates, until a source of recommended fuel is reached.

Alternate Fuel.

All kerosene type aviation fuels are considered alternate fuels for the C-5A and may be used continuously without system degradation or significant reduction in performance. All these fuels have higher freeze points and higher viscosity than JP-4 and, as a result, may impose operational restrictions on extended operation at high altitude, low ambient temperatures, or difficulty in engine starting with ground ambients below -30° C. These fuels, in order of preference, are:

1. Specification MIL-T-5624 JP-5 and its NATO equivalents (F-42, F-44)

2. Commercial Jet A, Jet A-1

3. Commercial Jet B - Equivalent to JP-4, but higher freeze point puts it in alternate fuel category.

Emergency Fuel.

Aviation gasoline, grade 115/145, may be used for limited operation when neither a recommended nor alternate fuel is available. The use of aviation gasoline is limited to a maximum of 20 hours without returning to use of either JP-4 or kerosene type fuels. In addition, leaded gasoline will leave deposits in the burners, turbine sections, and tail pipe. It is desirable to use as much JP-4 or kerosene type fuels mixed with gasoline to minimize the undesirable effects. Mixing of oil with aviation gasoline is not required.

When using a mixture of fuel containing 10% gasoline or more, fuel boiling becomes a factor. It is necessary to restrict the rate of climb to 600 feet per minute when the fuel boiling altitude is reached. Boiling altitudes are given in the following table:

Initial Fuel Temp °C	Boiling Altitude
21	40,000
27	36,000
32	30,000
38	25,000
43	20,000

Note

Correction for loss of range must be made if the boiling altitude of fuel, as indicated in the above table is exceeded. Allow 0.5% loss of aviation gasoline on board for each 1,000 feet of additional altitude.

Take-off when using aviation gasoline should not be attempted with boost pumps inoperative. The high vapor pressure of this fuel may result in cavitation within the engine driven fuel pump and loss of thrust. The above is not meant to imply that take-offs should be attempted with boost pump inoperative when using recommended or alternate fuels except under emergency conditions.

FUEL GRADE PROPERTIES AND LIMITS

USE	FUEL TYPE	GRADE	NATO SYMBOL	US MILITARY SPECIFICATION	UNITED KINGDOM SPECIFICATION	SPECIFIC GRAVITY (MAX-MIN AT 16°C)	FREEZE POINT °C	LIMITS
RECOMMENDED FUEL	WIDE CUT GASOLINE	JP-4	F-40	MIL-T-5624		0.802-0.751	-58	
ALTERNATE FUEL	WIDE CUT GASOLINE	COMMERCIAL JET B	F-40	NONE	DERD 2486	0.802-0.751	-49	2 3
	KEROSENE	JP-5	F-44	MIL-T-5624	DERD 2498	0.845-0.788	-46	2
		COMMERCIAL JET A-1	F-34	NONE	DERD 2494	0.829-0.775	-48	2 3
		COMMERCIAL JET A	F-30	NONE	DERD 2482	0.829-0.775	-38	2 3
EMERGENCY FUEL	AVIATION GASOLINE	115/145	F-22	MIL-G-5572		0.706	-60	1

NOTE

1. FOLLOW CLIMB RESTRICTIONS.
2. AVOID FLYING FOR MORE THAN 30 MINUTES AT ALTITUDES WHERE INDICATED OAT IS BELOW THE FREEZE POINT OF THE FUEL PLUS 3°C.
3. PRIOR TO USING COMMERCIAL FUEL, OBTAIN FREEZE POINT FROM VENDOR OR AIRLINE SUPPLYING THE FUEL, THEN FOLLOW LIMIT 2 ABOVE. THE AIRCRAFT COMMANDER SHOULD EXERCISE CAUTION IF HE SUSPECTS OR OBSERVES IMPROPER FUEL HANDLING PROCEDURES. IF THERE IS ANY INDICATION THAT CLEANLINESS IS NOT UP TO STANDARD, A FUEL SAMPLE SHOULD BE TAKEN IN A GLASS CONTAINER AND OBSERVED FOR FOGGINESS, PRESENCE OF WATER OR RUST.

C5A-1-X4/1-186

Figure 5-2

Low Temperature Ground Operation.

When attempting engine starts with JP-5 or kerosene type fuels at ambient temperatures below -30° C, TIT and N_2 should be closely monitored since difficulty in obtaining engine light-off may be experienced during the start.

Low Temperature Flight Operation.

Do not operate for more than 30 minutes at IOAT below -55°C with JP-4 or NATO equivalent; below -43°C with JP-5; -45°C with JET A-1; -46°C with JET B or NATO equivalent; below -35°C with JET A or below -57°C with aviation gasoline. Adherence to the above limits will assure that actual fuel temperature will be above the specification freeze point of the fuel being used.

Effects of Alternate Fuel on Range.

There is no significant range effect when using either kerosene or gasoline type fuels. Kerosene has approximately 1% fewer BTUs per pound than JP-4. The range would also be reduced 1%. Advantage cannot be taken of the higher density of kerosene since the aircraft is limited to a maximum fuel weight based on the density of JP-4. Aviation gasoline has approximately 2% more BTUs per pound than JP-4; however, the advantage could easily be offset by fuel boiling.

Fuel Control Adjustment.

When the airplane is being operated on JP-4 or Jet B the engine fuel control specific gravity adjustment should be set on .77.

When operating on aviation gasoline, the control should be set on .71. If operating on a mixture of gasoline and JP-4 or kerosene, the specific gravity of the mixture should be estimated and the control set to the nearest .01 gravity of the mixture.

When operating on kerosene type fuels, JP-5, Jet A, Jet A-1, the control should be set at .81. When operating on a mixture of these fuels, the control should be set to either .77 or .81, depending on which is the predominant fuel.

For engines equipped with General Electric part number 9004M39P-14 or subsequent fuel control, the specific gravity adjustment is set to 0.70 for all fuels.

ENGINE ACCELERATION LIMITS.

Avoid manipulating the throttles during maneuvering flight whenever possible. If power must be adjusted during maneuvering flight, limit the rate of engine acceleration or deceleration to less than 15 percent fan (N_1) RPM per second. However, engine acceleration or deceleration is unrestricted during maximum roll rate maneuvering to 30 degrees of bank if the airplane acceleration is restricted to 1.15g or less.

If no roll rate is present, engine acceleration or deceleration is unrestricted if the airplane acceleration is restricted to 1.8g or less.

If engine RPM is constant, the maneuver load limits in this Section apply.

Note

If in an emergency it is necessary to exceed these limits, the airplane should be landed as soon as possible. Limit maneuvering and throttle transients to a minimum.

ENGINE CROSSWIND/TAILWIND LIMITS.

Engine operating limits in crosswind and tailwind conditions are shown in figure 5-3. For ease of operational use, these limits may be summarized as follows:

Wind from the two rear quadrants.

Up to 30 knots - No restriction

30 to 40 knots - Taxi permitted with N_1 RPM limited to 77 percent.

Above 40 knots - Do not exceed 1.5 EPR setting.

APU LIMITATIONS.

EGT Limits.

CONDITION	TIME	MAXIMUM OBSERVED EGT (°C)
Ground Starting Transient	20 Sec. (3)	715 (1) 715 - 824
Flight Starting Transient	20 Sec. (3)	815 (1) 815 - 824
Full Load (2)	Continuous	630 - 691
Transient at Governed Speed	3 Min. (3)	691 - 746

(1) Temperature, other than transient, beyond this limit indicates a malfunction and should be investigated.

(2) Full load occurs with one APU supplying bleed air and the Air Cond Master switch in the BOTH position.

(3) Transient temperature for a duration in excess of that indicated requires inspection of the turbine section for overheat damage.

ENGINE OPERATING LIMITATIONS IN CROSSWIND AND TAILWIND CONDITIONS

FORWARD THRUST

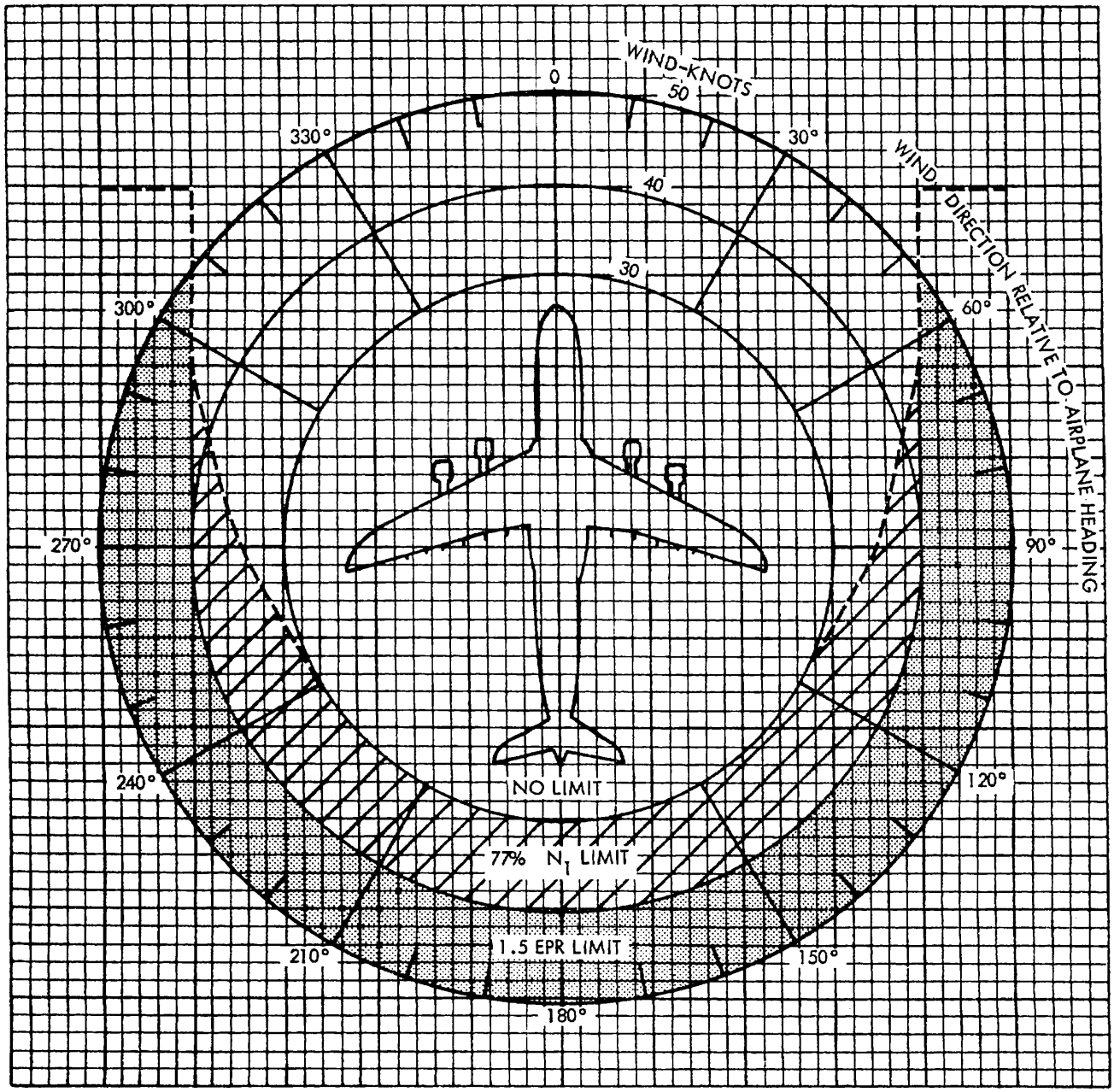

C5A-1-X1/1-188

Figure 5-3.

Generator Frequency Limits.

CONDITION	FREQUENCY LIMITS~ CPS
Steady State Generator and/or Bleed Air Load	400 ± 5
Transient Generator and/or Bleed Air Load	400 ± 20 (1)

(1) The on speed light shall remain on.

ATM LIMITATIONS.

On 68307, 70167 and 70170 through 80228, do not operate the ATMs unless T.O. 1021 has been complied with.

ENGINE SUCTION FEED LIMITATIONS (MAIN TANK TO ENGINE FEED).

CAUTION

Fuel crossfeed and isolation valves should be closed during suction feed operation.

Recommended and Alternate Fuels.

During Climb.

Outboard Engines	12,600 feet maximum
Inboard Engines	20,000 feet maximum

During Cruise.

Outboard Engines	32,000 feet maximum
Inboard Engines	40,000 feet maximum

TIRE LIMITATIONS.

The landing gear tires are limited to a maximum ground speed of 174 knots.

WEIGHT LIMITATIONS.

The weight limitations when used in conjunction with the other limitations in this section present the restrictions required to maintain the loads imposed on the airplane within 80 percent of the design load levels. The weight limitations chart (figure 5-4) shows the allowable cargo and fuel combinations for varying operating weights of 320,000 to 350,000 pounds. The operating weight includes the crew, trapped fuel, engine oil, and standard equipment; it does not include cargo or usable fuel.

The following are airplane weight limits for the indicated condition and should not be exceeded.

Note

The values shown on figures 5-4, 5-5, 5-5A, 5-6, 5-7, and 5-8 exceed those shown in the following table for planning purposes only. Do not exceed values shown in the following table.

Condition	Limitations
Maximum Ramp Weight (318,500 pounds of fuel)	732,500 Pounds
Maximum Flight Weight (318,500 pounds of fuel)	712,500 Pounds
Maximum Landing Weight (1)	712,500 Pounds
Normal Landing Weight (2)	635,350 Pounds
Normal Landing Fuel Weight (2)	159,250 Pounds
Maximum Fuel (1)	318,500 Pounds
Maximum Zero Fuel Weight	498,000 Pounds

(1) Allowable Sink Speed -5 FPS (300 FT/MIN)

(2) Allowable Sink Speed -6 FPS (360 FT/MIN)

Clearance to operate 70168 at weights in excess of the above values for essential flight test purposes must be approved by the C-5A System Program Office of the Aeronautical Systems Division on an individual flight basis.

GROSS WEIGHTS.

Since the operating weight of the individual airplane will vary because of special equipment, variations in standard equipment, modifications, and other factors, the cargo-fuel combination must be adjusted to compensate for the change in operating weight.

CENTER OF GRAVITY LIMITATIONS.

The location of the center of gravity for any gross weight configuration, determined from T.O. 1-1B-40, Handbook of Weight and Balance Data must fall within the percent of the mean aerodynamic chord (MAC) shown in the center of gravity limitations charts. (See figures 5-5, 5-5A and 5-6.) These limitations represent combined structural, stability, and control limitations that must be observed to obtain safe and effective airplane performance.

WEIGHT LIMITATIONS

MODEL: C-5A
TF39-GE-1 ENGINES

DATE: JANUARY 1968
DATA BASIS: ESTIMATED

NOTE

1. INTERIM MAXIMUM ZERO FUEL WEIGHT = 498,000 LBS.
2. DO NOT REFUEL THE AIRPLANE TO VOLUME CAPACITY SINCE THE MAXIMUM PERMISSIBLE FUEL WEIGHT CAN BE EXCEEDED.
3. DO NOT EXCEED THE MAXIMUM FUEL WEIGHT LIMITS FOR INDIVIDUAL TANKS.

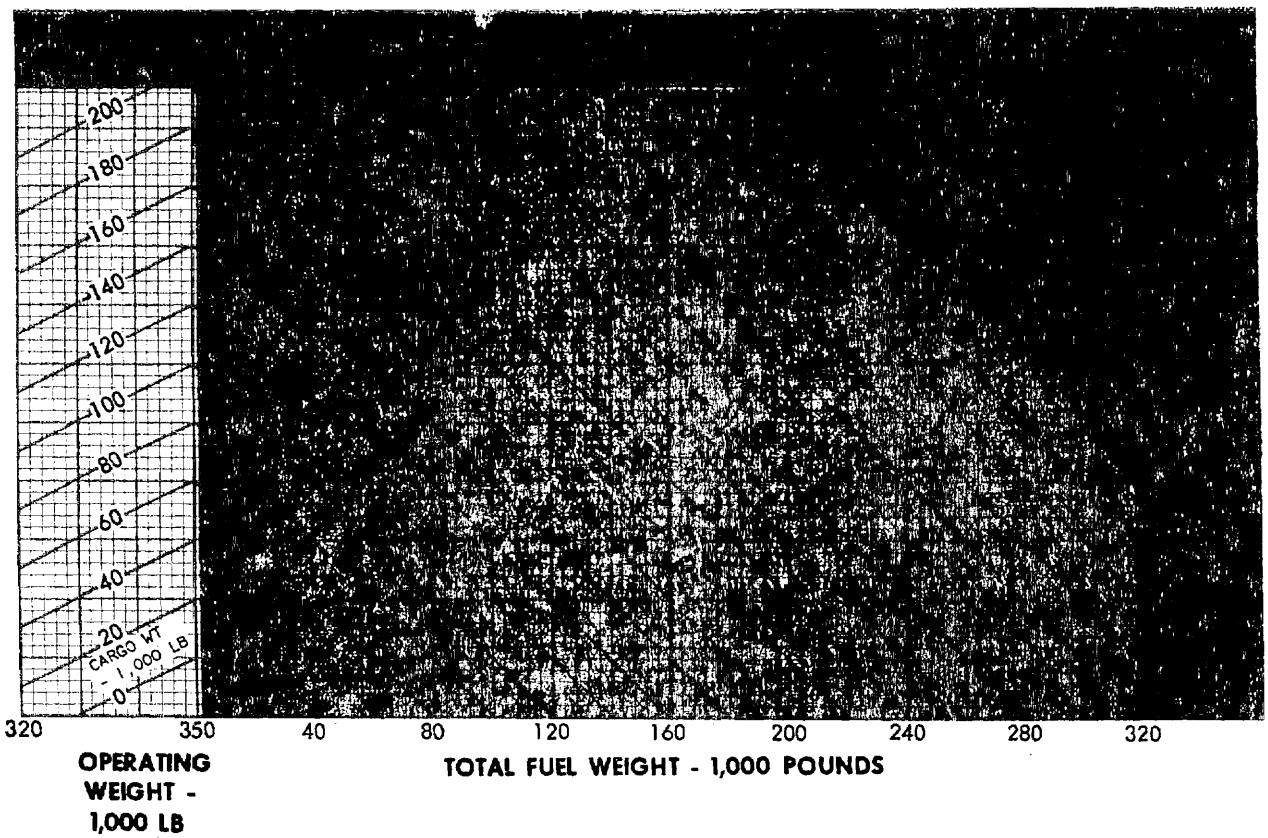

⚠ LAND AT 6 FPS (360 FT/MIN) OR LESS TO THE LEFT OF THIS LINE.
LAND AT 5 FPS (300 FT/MIN) OR LESS TO THE RIGHT OF THIS LINE.

RECOMMENDED

NOT RECOMMENDED

C5A-1-X2/0-122

Figure 5-4.

CENTER OF GRAVITY (CG)

GEAR UP OR DOWN

STANDARD FUEL SEQUENCE

NOTE

1. GROSS WEIGHTS WITHIN THE UNSHADED AREA REPRESENT ACCEPTABLE LOADINGS FOR WHICH THE CENTER OF GRAVITY WILL REMAIN WITHIN LIMITS THROUGHOUT THE MISSION PROVIDED THAT THE ONLY WEIGHT CHANGE WILL BE FUEL USAGE BY THE STANDARD SEQUENCE.

2. GROSS WEIGHTS WITHIN THE SHADED AREAS REPRESENT ACCEPTABLE LOADINGS ONLY IF THE ZERO FUEL WEIGHT CENTER OF GRAVITY FALLS WITHIN THE LIMITS SHOWN ON THE ZERO FUEL WEIGHT CENTER OF GRAVITY (CG) CHART.

3. GROSS WEIGHTS WITHIN THE CROSSHATCHED AREA REPRESENT ACCEPTABLE LOADINGS FOR LIMITED OPERATION WITH NO CARGO OR BALLAST PROVIDED THE ZERO FUEL WEIGHT CENTER OF GRAVITY FALLS WITHIN THE LIMITS SHOWN ON THE ZERO FUEL WEIGHT CENTER OF GRAVITY (CG) CHART. DO NOT ENGAGE THE AUTOPILOT WHEN OPERATING IN THIS AREA.

4. INTERIM MAXIMUM FLIGHT WEIGHT IS 712, 500 POUNDS.

5. DURING AIRDROP, MOMENTARY C.G. EXCURSIONS BEYOND THE FORWARD OR AFT LIMIT ARE EXPECTED AND ACCEPTABLE.

MAC = 370.523 INCHES
LEMAC = FUS STA 1254.24

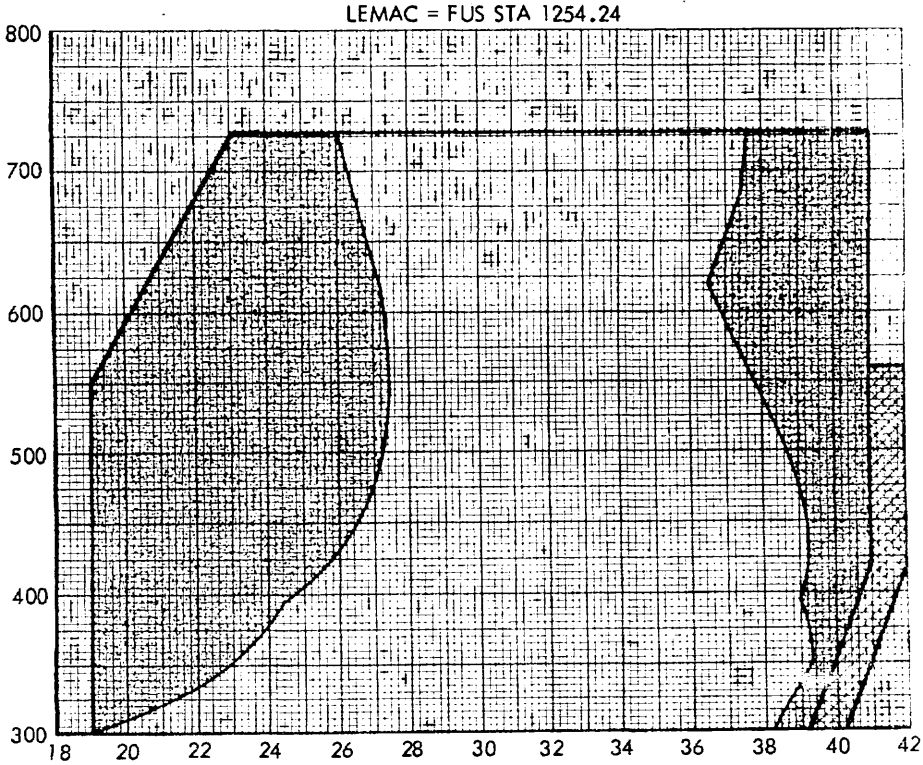

5A-1-34/1-114

Figure 5-5

CENTER OF GRAVITY (CG)

GEAR UP OR DOWN

ALTERNATE FUEL SEQUENCE

NOTE

1. GROSS WEIGHTS WITHIN THE UNSHADED AREA REPRESENT ACCEPTABLE LOADINGS FOR WHICH THE CENTER OF GRAVITY WILL REMAIN WITHIN LIMITS THROUGHOUT THE MISSION PROVIDED THAT THE ONLY WEIGHT CHANGE WILL BE FUEL USAGE BY THE ALTERNATE SEQUENCE.

2. GROSS WEIGHTS WITHIN THE SHADED AREAS REPRESENT ACCEPTABLE LOADINGS ONLY IF THE ZERO FUEL WEIGHT CENTER OF GRAVITY FALLS WITHIN THE UNSHADED AREA ON THE ZERO FUEL WEIGHT CENTER OF GRAVITY (CG) CHART.

3. IF IT IS NOT POSSIBLE TO UTILIZE THE ALTERNATE FUEL SEQUENCE, REFER TO THE CENTER OF GRAVITY CHART FOR STANDARD SEQUENCE.

4. INTERIM MAXIMUM FLIGHT WEIGHT IS 712,500 POUNDS.

MAC = 370.523 INCHES
LEMAC = FUS STA 1254.24

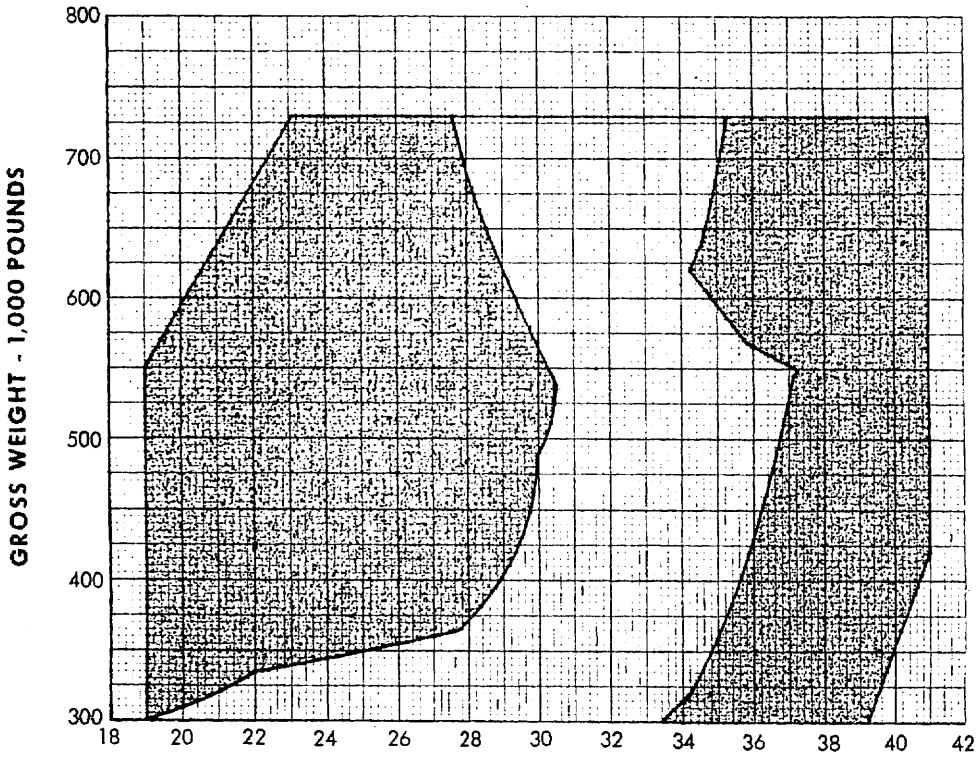

C5A-1-X4/1-206

Figure 5-5A

ZERO FUEL WEIGHT CENTER OF GRAVITY (CG)

NOTE

1. THE AIRPLANE SHALL BE LOADED IN THE UNSHADED AREA WHEN POSSIBLE. WHEN LOADED IN THE UNSHADED AREA, USE ALTERNATE FUEL SYSTEM MANAGEMENT.
2. STANDARD FUEL SYSTEM MANAGEMENT MUST BE USED WHEN LOADED IN ANY OF THE SHADED AREAS.
3. TO PERMIT LIMITED OPERATION WITH NO CARGO OR BALLAST, THE AIRPLANE MAY BE FLOWN WITH THE ZERO FUEL WEIGHT CENTER OF GRAVITY IN THIS AREA. WHEN OPERATING IN THIS AREA, USE STANDARD FUEL SYSTEM MANAGEMENT AND MONITOR THE INFLIGHT CENTER OF GRAVITY TO OBSERVE OUT OF C.G. LIMITS FOR THE AUTOPILOT.
4. WHEN LOADED WITHIN THIS ENVELOPE, THE GROSS WEIGHT STRUCTURAL DESIGN LIMITS WILL NOT BE EXCEEDED WITH EITHER JP-4 OR JP-5 FUELS.
5. INTERIM MAXIMUM ZERO FUEL WEIGHT IS 498,000 POUNDS.

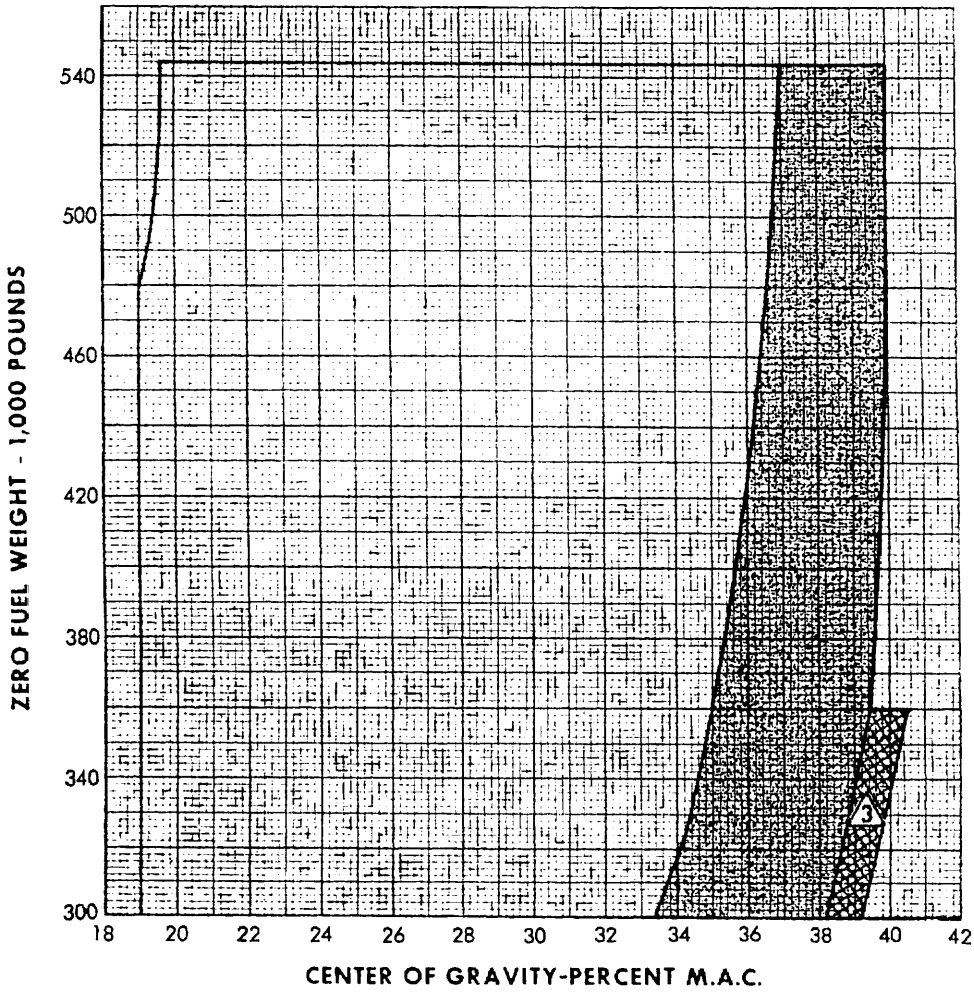

C5A-1-X4/1-187

Figure 5-6

ZERO FUEL WEIGHT CENTER OF GRAVITY (CG)

NON-STANDARD FUEL SEQUENCE

NOTE

1. During limited operation with one pair of corresponding opposite fuel tanks empty out of sequence, the following center of gravity limitations must be observed.

EMPTY TANKS	FWD LIMIT	AFT LIMIT
1 AND 4 MAIN (OUTBOARD)	D	G
2 AND 3 MAIN (INBOARD)	A	E
1 AND 4 AUXILIARY	C	G
2 AND 3 AUXILIARY	A	F
1 AND 4 EXTENDED RANGE	B	G
2 AND 3 EXTENDED RANGE	A	G

2. When loaded within this envelope, the gross weight structural design limits will not be exceeded with either JP-4 or JP-5 fuels.

(3) To permit limited operation with no cargo or ballast, the airplane may be flown with the zero fuel weight center of gravity in this area. When operating in this area, monitor the inflight center of gravity to observe out of C.G. limits for the autopilot.

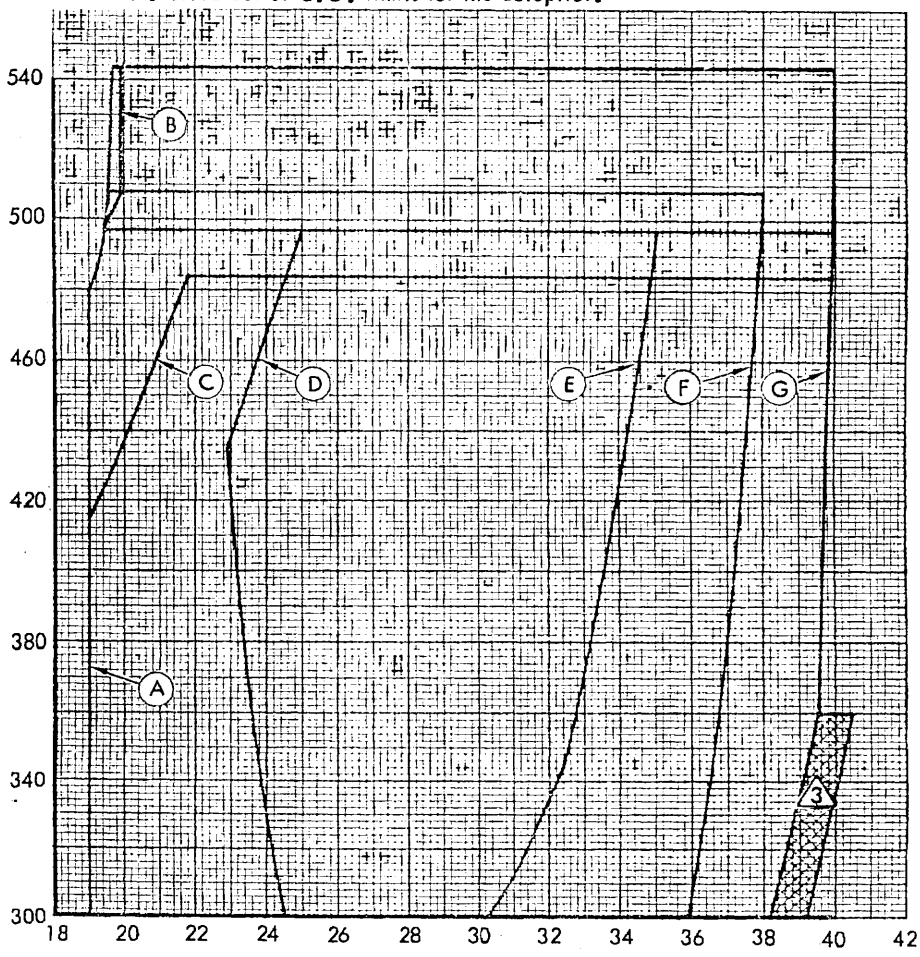

5A-1-XI/0-182

Figure 5-7.

AFT C.G. LIMITS.

To permit limited operation with no cargo or ballast, the airplane may be flown with the aft center of gravity at a maximum of 42 percent. Do not engage the auto pilot when the C.G. is aft of 41 percent.

CARGO LOADING LIMITS.

Details concerning the loading of cargo are contained in the Loading Instructions Manual, T.O. 1C-5A-9.

LIMITATIONS FOR OPERATION IN ICING CONDITIONS.

Flight in severe icing conditions is prohibited. Flight in other icing conditions is permissible providing procedures in Section VII, Adverse Weather Operations are followed. Flight through icing conditions must be recorded so that the fan blades will be inspected prior to the next flight.

FUEL SYSTEM LIMITATIONS.

Do not exceed the following amounts of fuel:

Main Tank	23,562 lb/tank
Auxiliary Tanks	30,062 lb/tank
Extended Range Tanks	26,000 lb/tank

Do not operate the airplane in excess of 280 KCAS or M = 0.825 (whichever is less) if No. 1 or No. 4 main tank sump low light comes on.

Do not operate the airplane in excess of 280 KCAS or M = 0.825 (whichever is less) if an outboard main tank is less than 75 percent full and the outboard extended range tank or either auxiliary tank in the related wing contains any fuel.

NON - STANDARD FUEL SEQUENCE PROCEDURES

WARNING

Special zero fuel weight center of gravity restrictions are required when using non-standard fuel sequencing. See figure 5-7.

Limited operations are permissible with any one fuel tank empty out of normal sequence provided the corresponding tank on the opposite wing is also emptied, the airspeed is limited to 280 KCAS or Mach 0.825, (whichever is less), alternate fuel management will not be employed and the following weight limitations are recognized:

EMPTY TANK	ZFW REDUCTION	MAX. G.W. LIMITATION
Outboard Main	47,124 lbs.	550,000 lbs.
Outboard Aux.	60,124 lbs.	550,000 lbs.
*Inboard Main	47,124 lbs.	Reduce Max. G.W. by 47,124 lbs.
Inboard Aux.	36,000 lbs.	Reduce Max. G.W. by 36,000 lbs.
Any Ext. Range	None	Reduce Max. G.W. by 35,000 lbs.

When the out of sequence operation involves the auxiliary or extended range tanks, the speed restriction only applies until normal fuel sequence is again possible. Operation in this manner is limited to the minimum necessary to return the airplane to a base where the condition necessitating such operation can be corrected.

*Note: A minimum of 4,500 pounds of fuel in each inboard main fuel tank is required for proper function of the hydraulic system heat exchangers during heavy system demands. Limited ferry missions are permissible with empty inboard tanks. However, hydraulic system cooling may be critical with empty inboard tanks during ground and flight operation which require heavy hydraulic system demands, such as touch and go landings.

FUEL UNBALANCE LIMITATIONS.

Figure 5-8 gives the maximum allowable fuel unbalanced condition, by tank. The values are based on the maximum design aileron trim capability.

CAUTION

It is necessary that the fuel sequencing specified under FUEL MANAGEMENT, Section I be observed. The airplane should not be flown under any other fuel sequencing except as an emergency measure and under the circumstances stated under Non-standard Fuel Sequence Procedures.

LIMITATIONS FOR OPERATION WITH SLATS RETRACTED.

Operation with slats retracted is permitted only to the extent necessary to recover an airplane to a base which has the capability to correct the malfunction. Take-offs and landings with planned cargo are permitted. Refer to T.O. 1C-5A-1-1 for performance data. Once the airplane has recovered to a base which can repair the malfunction, it shall not be dispatched until the slat malfunction has been corrected.

MAXIMUM ALLOWABLE FUEL DIFFERENTIAL

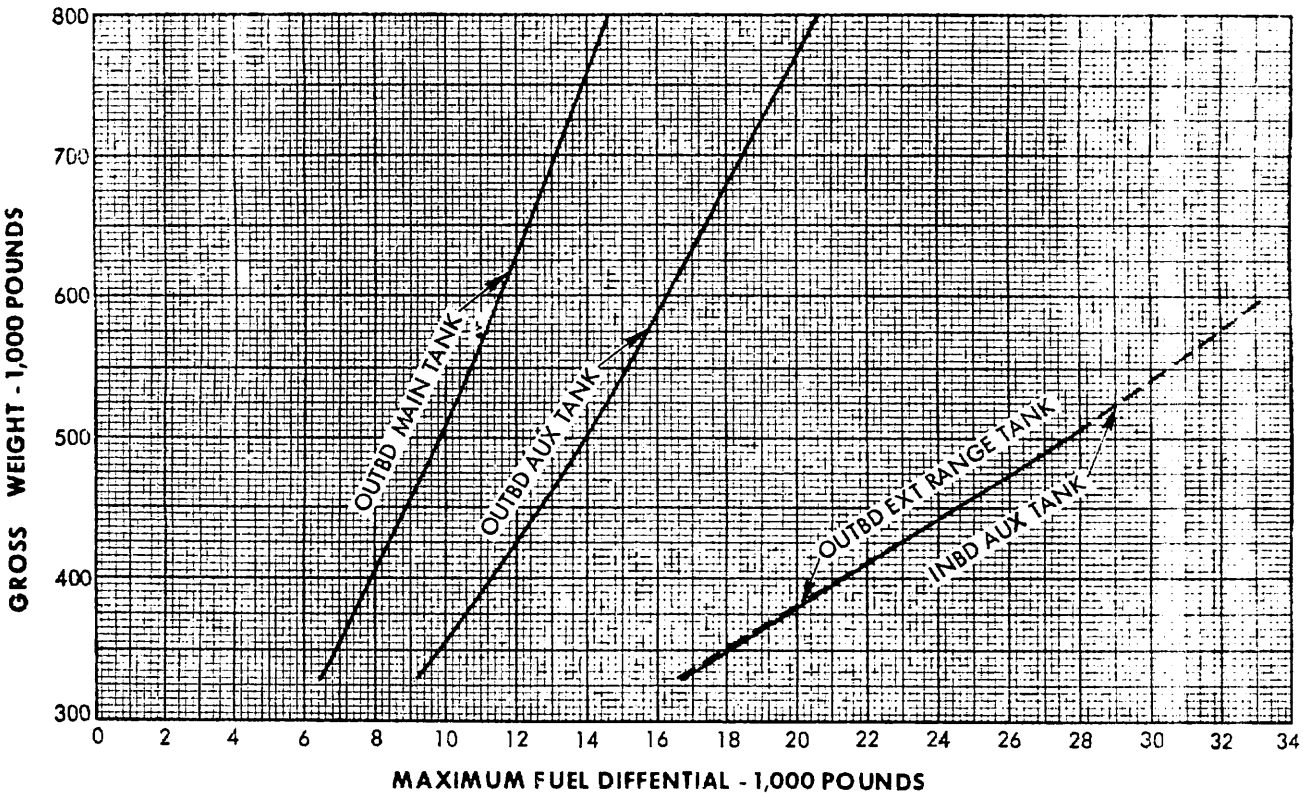

NOTE

1. THESE DATA PRESENT THE MAXIMUM FUEL DIFFERENTIAL BETWEEN CORRESPONDING OPPOSITE TANKS VS GROSS WEIGHT FOR AILERON TRIM CAPABILITY AT 1.1 V_{STALL}.

2. THE INBOARD MAIN OR INBOARD EXTENDED RANGE TANK COMPLETELY FULL DOES NOT EXCEED THE AILERON TRIM CAPABILITY.

C5A-1-0-162

Figure 5-8.

The maximum permissible gross weight is 670,000 pounds due to flap retraction speed limitations.

LIMITATIONS FOR OPERATION WITH INOPERATIVE EMERGENCY RUDDER TRIM.

Operation with the emergency rudder trim inoperative is permitted only to the extent necessary to recover the airplane to a base which has the capability to correct the malfunction. For flights with an inoperative emergency rudder trim system, assure that the RUDDER LIM switch is in "MIN Q" prior to take-off and remains there throughout the flight.

CAUTION

Abrupt rudder inputs and excessive side slips must be avoided.

AERIAL REFUEL SYSTEM LIMITATIONS.

On 70170 and 70171 not modified by T.O. 650, and 68304 and 70170 through 00447 not modified by T.O. 1546, and 68307, 70167, 70168, and 70170 through 90027 not modified by T.O. 1202, and airplanes not modified by T.O. 1381, the aerial refuel system is not to be operated, except in an emergency.

GROUND OPERATION LIMITATIONS.

The following ground operation limitations must be observed.

During turns, which may be performed with the aft main landing gears fixed or free to caster, the following nose landing gear steering angle, braking and thrust limitations shall apply:

Maximum Nose Landing Gear Steering Angle Chart

THRUST	BRAKING	FIXED	CASTERED
Symmetric	Symmetric	60°	*60°
Asymmetric-Up to 50% of Maximum	Symmetric	45°	*60°
Symmetric	Moderate Asymmetric	45°	*60°
Asymmetric	Moderate Asymmetric	30°	*45°
*Initiate aft main gear centering immediately when coming out of turn.			

When crosswind gear angles are set in, nose wheel steering shall be limited to 25 degrees either side of the crosswind angle setting.

With any main landing gear locked (as a result of a malfunction) at any angle greater than 4 degrees from neutral, limit nose gear steering to ± 30 degrees.

When possible, avoid braking to a stop in turns at any taxi speed. If the airplane is stopped in a turn, with the aft main landing gears castered, the nose gear must not be turned more than 30 degrees from the stopped position prior to resuming airplane forward motion. At the onset of forward motion, observe the limitations on turning with the aft main landing gears castered.

With the airplane stopped, and all main gears at zero degrees, aligned fore and aft, the nose gear may be turned 45 degrees prior to airplane forward motion.

Avoid abrupt or hard braking except during emergencies. If extreme brake application is unavoidable, inspection of the main landing gear is recommended.

If the airplane is not completely unkneeled, do not operate the engines above idle power.

During engine operation with the airplane unkneeled, avoid high asymmetric power to prevent the possibility of sliding the nose landing gear sideways.

TOWING.

Refer to T.O. 1C-5A-2-1, Organizational Maintenance, Ground Handling and Servicing Manual for towing procedures and towing restrictions.

TAXI LIMITATIONS — INDIVIDUAL MLG KNEELED.

Taxi operation with an MLG kneeled is limited to the gross weight and center of gravity combinations shown in figure 5-9.

CAUTION

Do not taxi the airplane when a kneeled gear is in contact with the taxiing surface. Refer to T.O. 1C-5A-2-10, Organizational Maintenance, Landing Gear, for procedures and restrictions when this condition exists or when individual kneeling is desired while the airplane is not moving.

SUBSTANDARD RUNWAYS.

Substandard runway operation is not permitted.

Note

A substandard runway is defined as any runway which does not have a well maintained paved surface suitable for unlimited operation of large and heavy airplanes.

AIRSPEED LIMITATIONS.

The airspeed limitations chart (figure 5-11) shows the permissible, caution, and maximum flight speeds

The green area of the chart shows airspeeds where operation is recommended.

Operation in the yellow zone is not recommended. The recommended speed limit (lower boundary of the yellow zone) should never be intentionally exceeded, it is merely a safety margin for inadvertent speed increases. However, under emergency or mandatory operational situations, operation in the yellow zone is permissible if the conditions specified for operation in this area are satisfied. (See figure 5-11.)

Operation in the red area is prohibited.

On 70170 through 70174 not modified by T.O. 1272, it is possible for the flap power pack to fail, thereby allowing the flaps to move out of the selected position. Do not exceed 280 KCAS without manually setting the flap asymmetry brake. To provide additional safety margin in the event flaps creep up, the minimum full flap approach speed is the charted approach speed plus 10 knots.

CONFIGURATION	DO NOT EXCEED (WHICHEVER IS MORE RESTRICTIVE)
CLEAN - MAXIMUM	360 KCAS or M 0.875 (1) (6) (9)
CLEAN - RECOMMENDED	300 KCAS or M 0.825 (1) (4)
CLEAN - SEVERE TURBULENCE	240 KCAS or M 0.825 (2)
LANDING GEAR EXTENDED	250 KCAS or M 0.60 (7)
LANDING GEAR OPERATING	250 KCAS or M 0.60 (1)
LANDING LIGHT EXTENDED	280 KCAS or M 0.825
APU INFLIGHT STARTING AND OPERATION	350 KCAS
On 00446 and up and airplanes modified by T.O. 1520:	
40 and 62.5 percent FLAPS	185 KCAS or M 0.45 (3)
LANDING FLAPS	165 KCAS or M 0.45 (3)
LANDING FLAPS WITH NO SLATS	165 KCAS
40 and 62.5 percent FLAPS WITH NO SLATS	175 KCAS
On 68304, 68307, 70167, 70168, and 70170 through 00445 not modified by T.O. 1520:	
40 percent FLAPS	185 KCAS or M 0.45 (3) (8)
62.5 percent FLAPS	170 KCAS or M 0.45 (3) (8)
LANDING FLAPS	155 KCAS or M 0.45 (3) (8)
LANDING FLAPS WITH NO SLATS	155 KCAS
40 and 62.5 percent FLAPS WITH NO SLATS	170 KCAS
RAT EXTENSION	350 KCAS
RAT RETRACTION	180 KCAS
SLATS NOT RETRACTED WITH FLAPS RETRACTED	185 KCAS
RAMP AND CENTER CARGO DOOR OPERATING AND OPEN	205 KCAS or M 0.45

GROUND CLEARANCE

KNEELED MLG

NOTE

1. Clearance of kneeled gear based on taxiing on smooth surface.
2. No flat tires on main landing gears not kneeled.

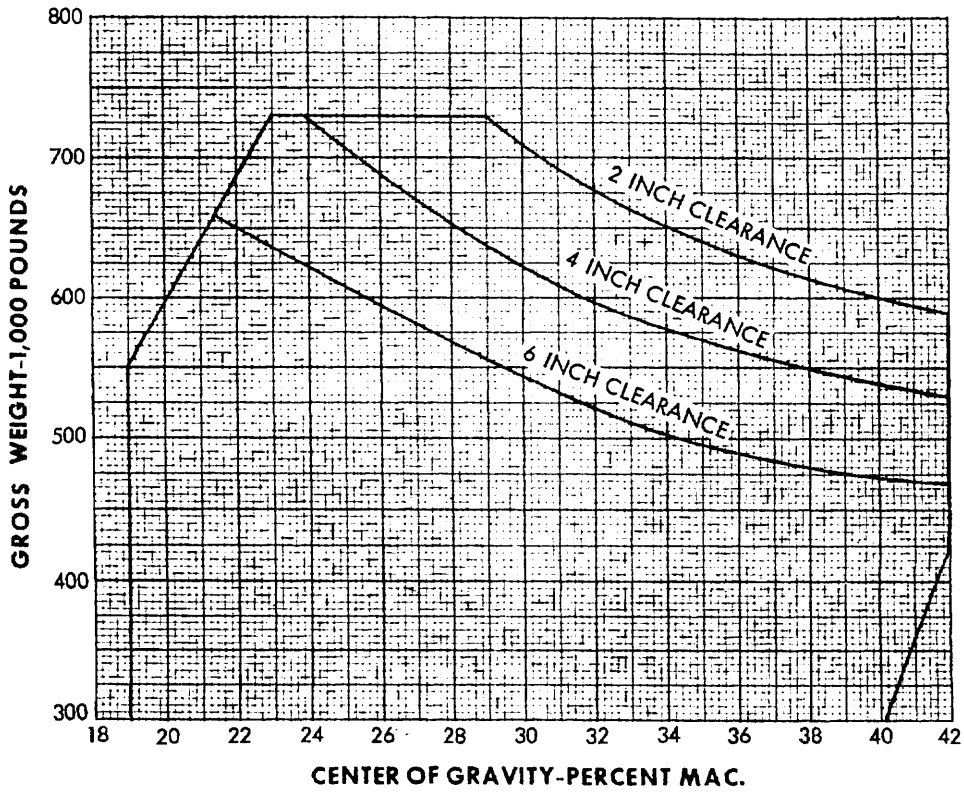

C5A-1-X3/3-199

Figure 5-9.

CONFIGURATION	DO NOT EXCEED (WHICHEVER IS MORE RESTRICTIVE)	
RAMP OPEN THREE INCHES	350 KCAS	
TROOP DOORS OPEN	205 KCAS or M 0.45	
PARATROOP AIR DEFLECTORS EXTENDED	205 KCAS	
PARATROOP JUMP PLATFORMS DEPLOYED	205 KCAS	
FLIGHT CONTROL POWER OFF	350 KCAS or M 0.825	(5)
YAW AUGMENTATION SYSTEM FAULTED OR INOPERATIVE	300 KCAS or M 0.825	

(1) See chart of Maximum Flight Speed vs Altitude. (See figure 5-11.)

(2) Recommended turbulence penetration speed is 240 KCAS or M 0.74.

(3) These limitations also apply while flaps are being extended to, or retracted from this position.

(4) These limitations also apply to inflight refueling door open.

(5) When any flight control hydraulic power switch is in "OFF" or a flight control hydraulic sys off light comes on.

(6) Refer to Nose Landing Gear Door Limits, this section.

(7) Gear extended speeds of 200 KCAS or less are recommended when mission requirements do not dictate higher speeds.

(8) At gross weights above 680,000 pounds, it will be necessary to extend the flaps in increments of 40 percent, 62.5 percent, and 100 percent at the speeds shown, in order to maintain 1.3 V stall.

(9) Refer to AFT CARGO DOOR SYSTEM LIMITATIONS.

NOSE LANDING GEAR DOOR LIMITS.

On 68304, 68307, 70167, 70168, and 70170 through 00453 not modified by T.O. 1271, to prevent possible unlocking of the nose landing gear doors, do not exceed a maximum speed of 300 KCAS.

MANEUVER LOAD LIMITS.

CONFIGURATION	LOAD FACTOR
ZERO BANK ANGLE	
CLEAN AND THRUST REVERSERS EXTENDED	0.0 to 2.0g
FLAPS DOWN	0.0 to 1.6g
BANK ANGLES UP TO MAX VALUES	
CLEAN AND THRUST REVERSERS EXTENDED	0.0 to 1.46g
FLAPS DOWN	0.4 to 1.4g

BANK ANGLE LIMITS.

CLEAN AND THRUST REVERSERS EXTENDED	47°
FLAPS DOWN	45°

ATTITUDE LIMITS BELOW 200 FEET.

WARNING

Bank angles should be limited to 15 degrees when the airplane is below 200 feet and should not exceed 5 degrees when 50 feet or below. Pitch angles should be limited to about 10 degrees when the airplane is below 200 feet. See figure 5-10 for attitude limitations during approach and landing.

FLIGHT LIMITATIONS.

Do not operate airplane in flaps extended configuration during severe turbulence.

Aerobatics of any kind, intentional spins, excessive nose high stalls, steep dives, and other maneuvers resulting in excessive accelerations are strictly prohibited.

Abrupt control forces or motions are prohibited.

At speeds higher than the recommended speed, do not mistrim the horizontal stabilizer more than ± 1.0 degrees from its 1.0g trim position.

add par. - See 15-88

STALLIMITER SYSTEM LIMITATIONS.

On 68304, 68307, 70167 and 70170 through 90027 not modified by T.O. 1282, do not fly the airplane with the pilot's or copilot's STALLIMITER switches in the "NORM" position.

APPROACH AND LANDING ATTITUDE LIMITS BELOW 50 FOOT HEIGHT

NOTE

1. ALL CONFIGURATIONS
2. LANDING IN THE CAUTION ZONE PERMISSIBLE IF THE RATE OF SINK AT TOUCHDOWN IS 3 FEET PER SECOND (180 FEET PER MINUTE) OR LESS.

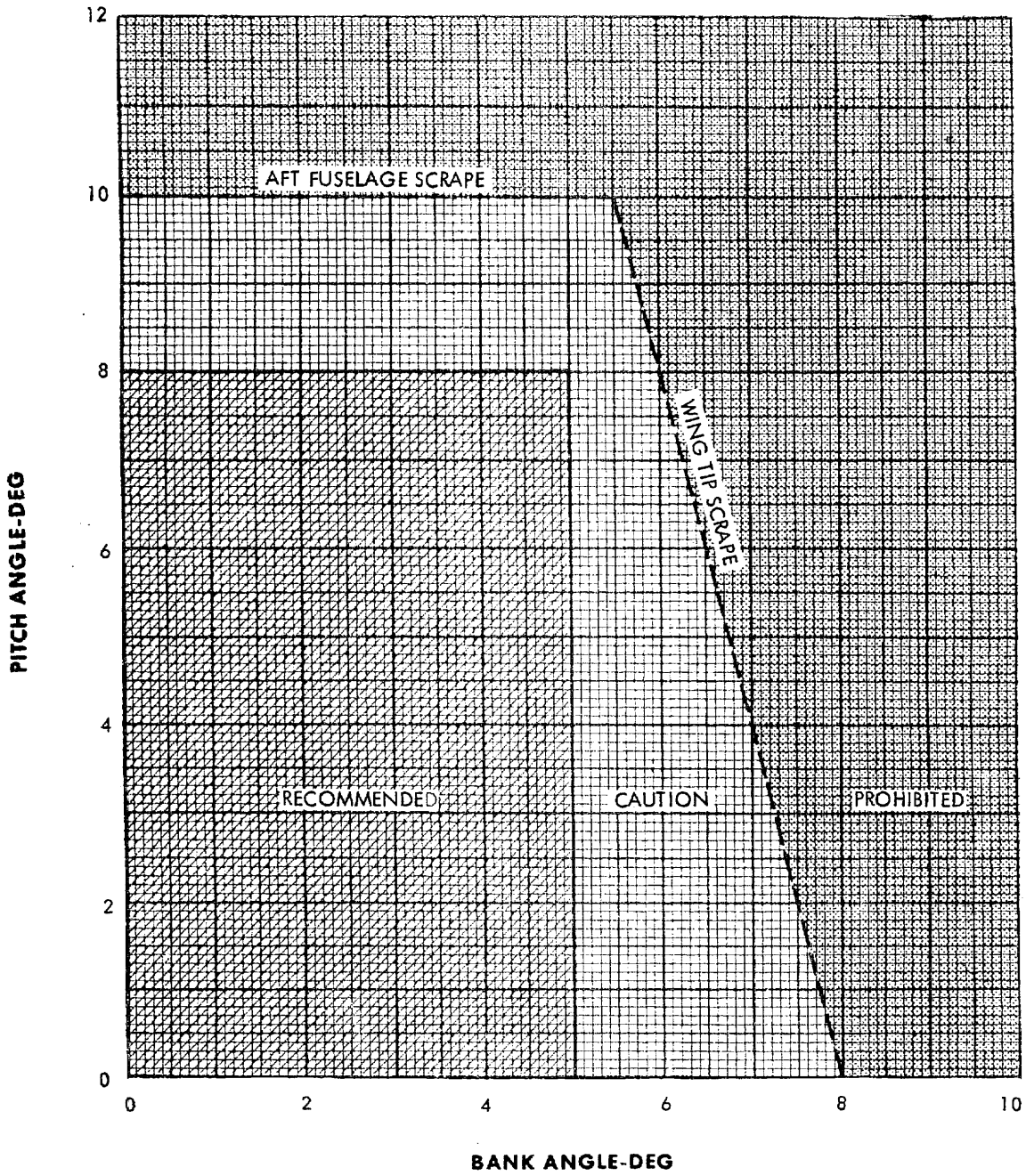

C5A-1-X1/0-183

Figure 5-10.

MAXIMUM FLIGHT SPEED VS ALTITUDE - CLEAN OR THRUST REVERSERS EXTENDED

MODEL: C-5A
TF39-GE-1 ENGINES

DATE: MAY 1972
DATA BASIS: ESTIMATED

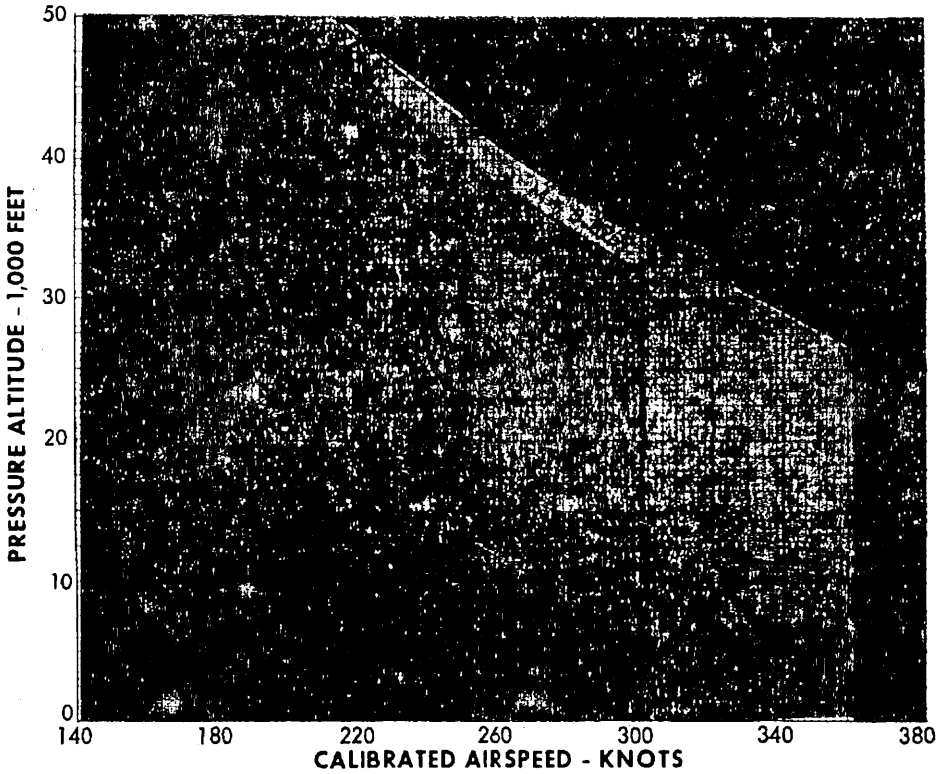

NOTE

1. FOR OPERATION IN SEVERE TURBULENCE, DO NOT EXCEED 240 KCAS OR MACH 0.825.

2. DUE TO EXCESSIVE BUFFET LOADS, THE MAXIMUM AIRSPEED FOR EXTENDING THRUST REVERSERS IN FLIGHT IS 300 KCAS OR MACH 0.825 FOR ALL NORMAL OPERATIONS. IN THE EVENT OF EMERGENCY DESCENT, THE MAXIMUM AIRSPEED FOR EXTENDING THRUST REVERSERS IS LIMITED TO 350 KCAS OR MACH 0.825. THE MINIMUM SPEED FOR EXTENDING THRUST REVERSERS IN FLIGHT IS THE HIGHER OF SHAKER ONSET OR 175 KCAS DUE TO EXCESSIVE BUFFET.

MANEUVER LOAD FACTOR LIMITS ARE 0.0g TO 2.0g

MANEUVER LOAD FACTOR LIMITS ARE 0.0g TO 2.0g. OPERATION IN THIS AREA MAY RESULT IN EXCESSIVE LOADS DUE TO GUST IN MODERATE TO SEVERE TURBULENCE

PROHIBITED

C5A-1-X3/3-115

Figure 5-11

VISOR DOOR LIMITATIONS.

See 155-93

The following ground operating limitations apply with the visor door open.

GROUND SPEED - 3 knots Maximum

The visor door is capable of being opened during constant 35-knot winds and will withstand gusts up to 70 knots when open.

AFT CARGO DOOR SYSTEM LIMITATIONS.

To prevent damage to the aft center cargo door slide block assembly, do not exceed 330 KCAS.

Do not open the aft cargo doors and ramp in flight until the following T.O.s have been complied with on the airplanes listed:

842	68307, 70167, 70168, 70170 through 80214, and 80216 through 80218
1046	68304, 68307, 70167, 70168, and 70170 through 00446
1175	68304, 68307, 70167, 70168, and 70170 through 00452
1290	68304, 68307, 70167, and 70171 through 90027
1357	68304, 68307, 70167, 70168, and 70170 and up

On airplanes not modified by T.O. 1267, if a side door NOT LKD light comes on during inflight operation and visual inspection confirms that the door is locked, continue with the opening/closing operation.

AIRDROP LIMITATIONS.

On 68307, 70167, 70168, and 70170 through 90007 not modified by T.O. 1208 and airplanes not modified by T.O. 1358, airdrop operations are prohibited.

Airdrop operations are permitted only in calm air or light turbulence.

CAUTION

Airdrops in moderate to severe turbulence are not permitted because of the possibility of exceeding the airplane structural limits.

The airplane configuration for airdrop of cargo is with 62.5 percent flaps at a speed of 150 KCAS and trimmed for 1.0g flight. The minimum target airspeed should not be less than 1.3 Vstall. During the extraction of cargo, any pilot induced elevator input to maintain attitude at or near trim attitude should be added smoothly.

The airplane configuration for airdrop of personnel is with 80 percent flaps at a speed of 130 KCAS and trimmed for 1.0g flight.

DROP WEIGHT LIMITATIONS.

The maximum total weight for airdrop is limited to 160,000 pounds. The maximum allowable single package platform weight for airdrop is 40,000 pounds.

CENTER OF GRAVITY LIMITATIONS.

The center of gravity prior to and after completion of the airdrop operation must be within the normal limits shown in figures 5-5 and 5-6. It is not recommended that single package loads greater than 25,000 pounds be loaded to a C.G. forward of 30 percent MAC. Single package loads of 25,000 pounds or greater loaded to a C.G. forward of 30 percent MAC are permissible with a stabilizer trim setting of 0 degrees selected before the package is dropped.

During multiple package airdrops, that are not sequential, it is desirable to retrim using not more than 8 degrees of stabilizer trim setting for flight prior to the next drop. When the next drop pattern is established, the stabilizer trim setting should be reset to 0 degrees to provide maximum post-drop recovery capability.

FORWARD C.G.

During multiple airdrops, excursions forward of the normal limits are expected; for sequential drops these excursions are momentary and acceptable. When the multiple drops are not sequential or if the planned airdrop is terminated during flight and the C.G. is forward of the normal limit, the airplane may be retrimmed up to a maximum of 8 degrees of stabilizer trim setting. The pilot should use elevator to maintain attitude. The flap setting should be maintained at 62.5 percent or reduced. If the airdrop is terminated, adjust the remaining load to provide a C.G. within normal limits.

CAUTION

If more than 8 degrees of stabilizer trim setting is used, with the C.G. forward of the normal limit, it is possible to encounter tail stall, thus limiting pitch control.

AFT C.G.

Momentary excursions aft of the normal limits are expected during the airdrop and are acceptable, provided the C.G. returns to a position forward of the aft limit after each package is dropped. A large package jamming in the ramp area may produce a critical situation in which the airplane will become unstable.

FORWARD SUPPORT AREA LIMITATIONS.

Information will be supplied when available.

ACCELERATION LIMITATIONS.

Never exceed the structurally safe maneuver load factor for the applicable flight conditions and for the airplane load distribution.

The airplane can be safely maneuvered to the load factors applicable for the configuration shown provided bank angle limits are not exceeded. As is true of all large airplanes which utilize powered or power-boosted control systems, more control power is available at high speed than is actually required to attain the allowable load factor. It is therefore possible, through abrupt control application, to initiate an airplane motion which requires an immediate movement of the control in the opposite direction and of approximately the same magnitude and rate in order to keep the airplane response within the defined limitations of load factor, back angle, sideslip angle, etc. At lower speeds, such abrupt control application may result in airflow separation, buffet, and/or an accelerated stall condition. Abrupt control forces or motions are prohibited since excessive loads may be imposed upon the airplane structure.

OPERATION IN TURBULENCE.

A primary source of structural flight loads is atmospheric turbulence. The magnitude of the loadings can be controlled by limiting airspeed.

Operation in severe turbulence should be avoided where practical. Severe turbulence is characterized by violent motions and accelerations where large changes in attitude are unavoidable. In such conditions the pilots will have difficulty reaching the controls or other objects within their normal reach, loose objects will be tossed about and walking about in the airplane will be extremely difficult if not impossible.

CAUTION

Do not operate the airplane in flaps extended configuration during severe turbulence.

Moderate turbulence is characterized by moderate motions and/or accelerations where small changes in attitude are unavoidable. In such conditions walking about the airplane will be difficult.

Light turbulence momentarily causes slight, erratic changes in altitude and/or attitude. Unsecured objects may be displaced slightly. Little or no difficulty in walking is encountered.

Moderate chop causes rapid rhythmic bumps or jolts without appreciable changes in altitude or attitude.

Light chop causes slight, rapid and somewhat rhythmic bumpiness without appreciable changes in altitude or attitude.

BRAKE LIMITATIONS.

Refer to Part 9 of T.O. 1C-5A-1-1, for brake energy limitations.

LIMITATIONS FOR OPERATION WITH PARTIAL BRAKES INOPERATIVE.

Operation with partial brakes inoperative is permitted only when it is necessary to return an airplane to a base which has the capability to correct the malfunction. Such operation shall be made only when the anti-skid system is operative and if a leak exists, the brake must be capped in accordance with instructions contained in T.O. 1C-5A-2-10. The following partial brakes inoperative configurations are permitted:

1. Any one pair of brakes inoperative (22 brakes operative)

2. Any one pair of brakes on each side of the airplane inoperative (20 brakes operative)

3. Any one pair of brakes on one side of the airplane inoperative and any two pairs of brakes on the other side inoperative (18 brakes operative).

4. Any bogie with all brakes inoperative (18 brakes operative).

CAUTION

Directional control problems may result if full braking is required for a rejected take-off with all brakes on one bogie inoperative.

5. Two forward or two aft bogies with all brakes inoperative (12 brakes operative)

When making a take-off with the plumbing of one or more pair of brakes disconnected, delay gear retraction for 2 minutes to allow for wheel spin-down.

Refer to T.O. 1C-5A-1-1 for performance data with partial brakes inoperative.

WIND GUST LIMITATIONS.

The airplane was designed to withstand 70-knot gusts from any direction, the tail-on gust being the most severe. Above 70-knots, control damage may occur if the airplane is not headed into the wind since design limits can be exceeded.

The airplane should be evacuated to a safe weather area if winds in excess of 70-knots are expected: however, if that is impossible, the airplane will be moored in accordance with Section II of T.O. 1C-5A-2-1. If the airplane has been subjected to wind velocities exceeding 70-knots, thoroughly check the control surfaces and points of attachment before the next flight.

AVIONICS EQUIPMENT LIMITATIONS.

AUTOPILOT LIMITATIONS.

On airplanes not modified by T.O. 1343, T.O. 1346, and T.O. 1347, the autopilot may be operated, but is limited as follows:

1. Operate in cruise configuration only (flaps and gear retracted).

2. With the roll axis engaged, operate in the airspeed range of 200 to 300 KCAS.

3. With the pitch axis engaged, operate in the airspeed range of 200 to 300 KCAS.

4. Bank angles are limited to 30 degrees.

5. Operate in basic attitude and heading hold (turn and pitch knobs), altitude hold and heading select modes only.

6. The autopilot must be disengaged prior to in-flight operation of thrust reversers.

On airplanes modified by T.O. 1343, T.O. 1346 and T.O. 1347, the autopilot may be operated in all modes except autoland and radar modes.

Note

This restriction does not apply for the initial T.O. 1C-5A-6CF-1 acceptance check flight of the AFCS "C" system.

AUTO-THROTTLE LIMITATIONS.

On airplanes not modified by T.O. 1349, do not use the auto-throttle system.

FLIGHT DIRECTOR SYSTEM LIMITATIONS.

On airplanes not modified by 1376, flight director computer gains have not been optimized, but are useable. During all flight director operation, the pilot must cross-monitor his raw deviation indications. If a large discrepancy occurs, the pilot should fly by using the raw deviation. Autoland is prohibited.

EMAC SYSTEM LIMITATIONS.

Do not use the EMAC system for critical performance data.

GO-AROUND ATTITUDE SUBSYSTEM LIMITATIONS.

On 68304, 68307, 70167 and 70170 thru 00452 not modified by T.O. 1308, the go-around attitude subsystem is inoperative. The go-around circuit breaker, on the avionics DC bus 2 portion of the navigator's circuit breaker panel No. 2, is open and pinned. The angle-of-attack tape is operational but not calibrated.

IWBS LIMITATIONS.

Do not use the data obtained from the IWBS for take-off weight and C.G. information.

MMR LIMITATIONS.

The following modes are not operational:

1. Terrain Following/Terrain Avoidance

2. Contour Mapping

3. Radar Approach

SKE LIMITATIONS.

SKE operation is limited to daylight VFR.

TRIM COMPENSATOR SUBSYSTEM LIMITATIONS.

On 70170 through 80211, do not operate the trim compensator subsystem.

On 68307, 70167, 70168 and 80212 through 90027, the trim compensator subsystem is deactivated and the trim compensator computer has been removed.

On 00445 and up and airplanes modified by T.O. 1091, the trim compensator subsystem is not installed.

SECTION VI

FLIGHT CHARACTERISTICS

Table of Contents

INTRODUCTION 6-1

STALLS 6-1

SPINS 6-3

FLIGHT CONTROLS 6-3

FLIGHT AUGMENTATION SYSTEM 6-3

FLIGHT CHARACTERISTICS WITHOUT FLIGHT AUGMENTATION 6-3

FLIGHT CHARACTERISTICS WITH AILERONS UPRIGGED 6-3

LEVEL FLIGHT CHARACTERISTICS 6-3

MANEUVERING FLIGHT 6-5

FLIGHT CHARACTERISTICS WITH AFT C.G. LOCATION 6-5

INTRODUCTION.

The airplane is designed for high speed, high altitude, cargo operation. The airplane exhibits good stability and control characteristics during normal operation throughout the flight envelope and has no peculiar flight characteristics inherent to the basic configuration. Stability and control information contained in this manual has been verified by flight tests.

STALLS.

Stall warning is provided by a stick shaker and the stall event is signaled by an audible warning horn. Intentional stall approaches are prohibited beyond the point of shaker onset.

Refer to Part 1 of T.O. 1C-5A-1-1 for stall speeds.

INITIAL BUFFET AND STALL.

The airplane has relatively normal stall and buffet characteristics. The buffeting may be either the low speed stall type or the high speed compressibility type. Initial stall is evidenced by very light airframe buffet just prior to shaker onset in all configurations for slow speed, (approximately Mach 0.25). If recovery is started at shaker onset, in no case should the stall warning horn sound. If the speed is reduced below the shaker onset speed, the position error becomes excessive on the VSFI's and the airspeed indicators are unreliable as a positive reference. Indicated airspeeds may drop to the minimum reading 30 KCAS. The shaker speed is considered to be the minimum usable airspeed. Refer to Part 1 of T.O. 1C-5A-1-1 for shaker and buffet onset speeds. Elevator control effectiveness is adequate for prompt stall recovery at all C.G.'s, gross weights, and configurations with airspeed bleed-off rates up to 3 knots per second. Lateral control effectiveness is good in both straight and turning flight stalls with flight augmentation on and the pilot's feet "on the floor". If, however, the ball in the turn and slip indicator is kept centered with manual rudder inputs during a turning flight stall approach, considerable top aileron is required to keep the bank angle from increasing. Under this condition, available aileron is reduced for stall recovery and lateral control is marginal.

FLAPS DOWN CONFIGURATION STALLS.

In straight flight stalls at buffet onset, a slight, but easily controllable, wing drop in either direction can be expected. If the airplane is flown into a full stall, light buffet occurs at approximately 2 to 4 knots prior to shaker onset and increases in intensity as the angle

of attack is increased. The buffet becomes severe at angles of attack of 2 to 4 degrees above that of the stall event. The buffet intensity increases after recovery is initiated and is characterized by a heavy vertical airframe pounding coupled with sharp lateral cockpit oscillations.

In all approaches to stall it is recommended that the stall be terminated at buffet onset or at least by shaker onset. The recovery control movement should be applied slowly and smoothly to keep airframe loads at a minimum.

FLAPS DOWN TURNING FLIGHT STALLS.

In all approaches to stall done in turning flight, the airplane should be under-coordinated. This condition is indicated by the ball of the turn and slip indicator being slightly on the low side of the turn. At most altitudes and airspeeds, the flight augmentation turn coordination is adequate and no additional pilot input is required. The reason for under-coordination is to take advantage of the dihedral effect which produces a rolling moment caused by sideslip. In so doing, there is no uncontrolled roll-under tendencies at full stall. If the turn is fully coordinated, there is a definite tendency to roll under at full stall and there may or may not be sufficient roll control to effect recovery without excessive bank excursions.

Elevator control effectiveness and airplane response to control inputs in turning stalls are adequate.

WARNING

During turning stall practice do not fully coordinate the turn. If top aileron is required to keep the turn from steepening, reduce the amount of rudder used. Use neutral or a slight amount of top rudder so that essentially zero lateral control wheel movement is used. If a fully coordinated turn (zero sideslip) is carried to a full stall, an uncontrolled roll-under is possible even with full control wheel and rudder application.

CRUISE CONFIGURATION STALLS.

No abnormal use of the controls is required during entry or recovery of clean configuration stalls. The response to stall termination control movement is prompt at all C.G.'s within the recommended range. Some slight rolloff near the stall event angle may be noted but it is easily controllable. In general, post stall airplane motion is mild and easily controllable. Natural airframe buffet can be perceived at approximately 2 to 4 knots prior to shaker onset. The buffet level is in general characterized by sharper higher frequency buffet than with the flaps down.

CRUISE CONFIGURATION TURNING FLIGHT STALLS.

Clean stalls at all altitudes are considered normal. Longitudinal control effectiveness remains positive and airplane response is prompt. Lateral control is positive and there is less tendency to roll under during a fully coordinated turn. It is also recommended that the turn be slightly under coordinated and that yaw augmentation be used with no pilot rudder input assistance as long as the turn is uncoordinated.

At Mach numbers above 0.72 natural airframe Mach buffet will be experienced prior to shaker onset and the stall should be terminated at this point.

Refer to Part 1 of T.O. 1C-5A-1-1 for shaker and buffet onset speeds.

STALL RECOVERY TECHNIQUES.

In general,a standard stall recovery is recommended. This recovery is satisfactorily accomplished with a positive, although not rapid, airplane nose down elevator control input to include lateral control input required to maintain or regain wings level flight accompanied by an increase in engine thrust. If recovery is started at shaker or initial buffet the stall is terminated immediately and altitude loss is minimal.

PRACTICE APPROACH TO INITIAL BUFFET/SHAKER.

Practice approach to initial buffet is to familiarize the pilot with the flying qualities of the airplane as a stall is approached. This is to teach recognition of stall warnings in time to prevent a complete stall. Consistent with this, it is not advisable to decrease airspeed below shaker onset or initial Mach buffet so as to expose the airplane to unnecessary buffeting for extended periods of time.

When taking off with the airplane loaded near the aft limit there is a tendency to rotate too rapidly and to over rotate. Less control movement is required; therefore, care should be exercised to move the control column aft only fast enough and far enough to accomplish the necessary pitch change.

The airspeed and/or angle of attack should be closely monitored during approaches and landing at aft C.G.'s because of the reduced stability level and reduced tendency to return to the correct approach speed.

The airplane does not exhibit a pronounced Mach tuck characteristic at high Mach number as experienced on other large airplanes; however, a mild tuck tendency is encountered over a very limited Mach range above about 0.8 Mach number.

LATERAL-DIRECTIONAL STABILITY.

The lateral-directional handling characteristics of the airplane are excellent throughout the flight envelope with the yaw/lateral augmentation operative.

As with most large high speed airplanes, the C-5 has a long period lateral-directional oscillation (dutch roll) present at high altitude with the yaw/lateral augmentation off. These oscillations are easily controllable under normal conditions. The dutch roll may be easily damped with the primary flight controls. Recommended procedure is to use rudder to stop the swing of the nose along with aileron to stop the roll. The dutch roll oscillations have a long period and the pilot should experience little difficulty in timing his control inputs to damp the oscillation. Should moderate to severe turbulence be encountered at high altitude with the yaw/lateral augmentation system inoperative, reduction in altitude will improve damping characteristics.

LATERAL DIRECTIONAL CONTROL CHARACTERISTICS.

Directional Control.

Directional control power on the C-5A is designed to provide adequate engine-out control, as is the case for most multi-engine airplanes. Depending on the airplane configuration and speed (low speed being most critical) the rudder may be capable of producing large angles of sideslip.

In all gear-up configurations at speeds below 250 KCAS and with the RUDDER LIMITER switch in "MIN-Q", or in "AUTO" when 35° of rudder is available, sideslip angles large enough to cause buffet may be produced. This characteristic is more readily experienced in the flaps down configuration, in that maximum attainable sideslip increases with increased flap deflection.

WARNING

All sideslip maneuvers or large rudder inputs must be terminated at buffet onset to prevent achieving excessively large sideslip angles.

Turn Coordination.

When the control wheel is deflected rapidly, with the flight augmentation system on or off, initial movement of the ball in the ADI turn and slip indicator is displaced in the direction opposite to the roll. This would normally be an indication of over coordination. Under most conditions, the turn is actually under coordinated, i.e. requires additional rudder in the direction of turn and roll with the flight augmentation system on. It has been determined that under coordination is desirable, in that once in a turn, little additional lateral control is needed to maintain a given bank angle. A fully coordinated turn would require aileron to keep the airplane from increasing bank angle.

Under normal conditions, with the flight augmentation system operable, the best procedure is to let the normal turn coordination provide the needed rudder movement and no pilot input is required.

With the flight augmentation system inoperative, additional rudder in the direction of the turn is always required to fully coordinate the turn. Use just enough rudder with the turn to keep the control wheel deflection to zero once a steady turn is established.

WARNING

The ball of the turn and slip indicator should be ignored on rapid roll entry, since if it is kept centered, extremely large sideslip angles can be experienced.

The flaps down approach to stall should be initiated at 10,000 feet to 15,000 feet altitude with a minimum of 10,000 feet above ground level. Flaps down approach to initial buffet should be practiced both gear up and down to provide realistic performance characteristics during recovery.

The practice of approach to buffet at the higher altitudes (20,000 feet pressure altitude and above) should be restricted to the clean configuration only.

WARNING

Do not practice approach to initial buffet with known malfunctions in any of the following systems: flight controls, flight augmentation system, stabilizer trim, engines and/or any other malfunction that could affect the controllability of the airplane.

SPINS.

Spins are a prohibited maneuver and will not be flight tested. If a spin is entered accidentally, it is anticipated that a normal recovery for multi-engine airplane will be effective: reduce power to idle, apply full rudder (opposite to needle indication on the turn and slip indicator) against the spin direction and hold until rotation stops. Without changing the trim setting of the horizontal stabilizer, hold elevator control forward of the neutral position. When rotation stops, immediately return rudder to neutral. Perform dive recovery.

FLIGHT CONTROLS.

The flight controls on this airplane are mechanical with fully powered hydraulic actuators. The controls are designed to be operated with hydraulic power on at all times. Hydraulic power should not be removed from any control surface actuators except during preflight checks and in handling emergency conditions.

A Ram Air Turbine (RAT) system is employed on this airplane to provide supplemental hydraulic power in event of power loss. The RAT system is designed to provide adequate hydraulic power to control the airplane under this emergency condition.

FLIGHT AUGMENTATION SYSTEM.

The airplane is designed to operate with full time stability augmentation. The pitch augmentation provides airplane pitch motion damping. The lateral -directional augmentation provides dutch roll damping and aids the pilot in turn coordination.

FLIGHT CHARACTERISTICS WITHOUT FLIGHT AUGMENTATION.

Additional rudder with the lateral control is always required in order to fully coordinate the turn, i.e. keep sideslip zero. Use enough rudder with the turn to keep wheel deflection zero once in a steady state turn.

Note

Large runway re-alignment maneuvers will be more difficult to accomplish with the flight augmentation system inoperative. Straight-in approaches are recommended.

FLIGHT CHARACTERISTICS WITH AILERONS UPRIGGED

Aileron uprigging causes a redistribution of the aerodynamic lift forces across the wing, which results in a lower wing bending moment. This reduces the wing stress levels which provides an increase in static load capability and wing fatigue life.

There is no significant change in clean configuration flight characteristics with the ailerons uprigged in accordance with the uprig procedures in Section II. On 68304, 68307, 70167, 70168, and 70170 through 00460 not modified by T.O. 1353, normal pitch trim will not be adequate at gross weights of 475,000 pounds or less at a C.G. of 41 percent MAC and 380,000 pounds or less at a C.G. of 36 percent MAC. Under these conditions, it will be necessary to use manual pitch trim not to exceed 2.5 degrees nose down. If the stabilizer is positioned at the normal trim limit, the auto trim fault light may come on and the pitch autopilot should then be disengaged.

On 00461 and up and airplanes modified by T.O. 1353, normal pitch trim authority has been increased to 2.7 degrees nose down.

LEVEL FLIGHT CHARACTERISTICS.

The stability and control levels for the airplane are satisfactory and normal for any trimmed flight condition throughout the speed envelope.

LONGITUDINAL STABILITY.

As the center of gravity approaches the aft limit, the airplane stability approaches neutral. This is manifest by less control being required to change the airplane attitude for initial movement and by having the airplane almost in trim at various speeds with no change in stabilizer position. It is therefore necessary to pay close attention to holding airspeed since there is less of a tendency to return to one precise trimmed airspeed.

MANEUVERING FLIGHT.

The airplane has normal maneuvering characteristics throughout the flight envelope.

FLIGHT CHARACTERISTICS WITH AFT C.G. LOCATION.

The elevator control forces are light with an aft C.G. During take-off and the landing flare, use caution so as not to over-rotate.

LONGITUDINAL STABILITY.

The airspeed and/or angle of attack should be monitored during normal and instrument approaches at aft C.G. because of the reduced stability level. This characteristic is manifested by a reduced tendency of the airplane to return to the correct speed during upsets encountered in turbulence. During approaches in turbulence, engagement of the pitch augmentation system will assist in controlling pitch attitude. A light weight aft C.G. will make the airspeed and pitch attitude more difficult to control.

CAUTION

Excessive approach speed increases the natural tendency for the airplane to float as ground effect is encountered and may result in overshoot of the planned touchdown point.

SECTION VII
ADVERSE WEATHER OPERATIONS

Table of Contents

ICING 7-2
Engine Icing 7-2
Pitot Icing 7-3
Structural Icing 7-3
Operation During Icing Conditions . . . 7-4
RAIN 7-5
TURBULENCE AND THUNDERSTORMS . . 7-6
COLD WEATHER OPERATION 7-7
Before Entering The Airplane 7-7
On Entering The Airplane 7-8
Before Starting Engines 7-12
Starting Engines 7-12
Warmup And Ground Test 7-12
Taxiing 7-12
Before Take-Off 7-13
Take-Off 7-13
After Take-Off 7-14
During Flight 7-14
Landing 7-14
After Landing 7-14
Engine Shutdown 7-14
Postflight 7-14
HOT WEATHER AND DESERT OPERATION 7-14
Before Entering The Airplane 7-15
After Entering The Airplane 7-15
Starting Engines 7-15
Taxiing 7-15
Before Take-Off 7-15
Take-Off 7-15
Climb 7-16
During Flight 7-16
Descent 7-16
Approach And Landing 7-16
Parking 7-16
Stopping Engines 7-16
Before Leaving The Airplane 7-16

ICING.

WARNING

Under no circumstances will flights be planned through forecast or known severe icing conditions. Airplane operation in moderate icing conditions may be tolerated for short periods of time (climb or descent), but evasive action (change altitude, course, or airspeed) should be undertaken to exit the icing conditions as soon as practicable.

The airplane is capable of instrument flight in light icing conditions. Light icing as referred to here is defined by DOD as:

> The rate of accumulation may create a problem if flight is prolonged in this environment (over one hour). Occasional use of deicing/anti-icing equipment removes/prevents accumulation. It does not present a problem if the deicing/anti-icing equipment is used.

The airplane is equipped with anti-icing systems to prevent ice formation on engine outer panel inlet guide vanes and the mid-span flow splitter, engine nacelles, pitot-static probes, angle-of-attack vanes, and total temperature probes. Protection of certain portions of the airplane from the elements can be accomplished while the airplane is on the ground. Refer to Cold Weather Operation for proper use of covers for engines, pitot tubes, and other openings.

If flight through icing conditions is necessary, the engine anti-icing system should be turned on before entering the condition. The "AUTO" position of the ICE DETECTOR switch will provide automatic engine anti-icing and a visual indication (icing light) on the flight engineer's console when icing conditions are entered. The "MAN" position will provide an ICING light when icing of the detector probe occurs, but the ENGINE ANTI-ICE switches will then have to be placed to "ON" or the ICE DETECTOR switch to "AUTO" to provide anti-icing.

Note

Do not take off or land with the ICE DETECTOR switch in "AUTO." To do so will result in a reduction in thrust if the anti-icing system comes on. If engine anti-icing is required, turn the ENGINE ANTI-ICE switches "ON" prior to take-off or landing.

When icing conditions are entered with the ICE DETECTOR switch in "AUTO", anti-icing will automatically be turned on to the engine inlet guide vanes, engine inlet lips, and EPR probes.

ENGINE ICING.

Note

Conditions exist under which jet engine icing can occur without structural icing. Icing occurs when the adiabatic expansion reduces the air temperature in the engine inlet; ingested water droplets which impinge on the engine inlet components will freeze. This phenomenon may occur during ground and take-off operations, when the airplane velocity is low and the engines are operated at high thrust settings. The ice detection system may not detect these conditions.

Ground Operation.

During ground operation and takeoff, operate the nacelle and engine anti-icing systems when visible moisture such as fog, rain or snow is observed at ambient temperatures below 45° F. In addition, if ice buildups are noted or suspected with the nacelle and engine anti-icing systems operating, momentarily advance the engines to 90 percent N_1 every five minutes in order to prevent potentially dangerous ice accretions on unheated engine surfaces.

Note

Prior to the 90 percent N_1 accelerations, insure that the area behind the airplane is clear of personnel and equipment.

Inflight Operation.

If flight in icing is required, activate the nacelle and engine anti-icing systems and avoid prolonged operation at thrust settings below 60 percent N_1. If prolonged operation at thrust settings below 60 percent N_1 cannot be avoided, momentarily advance each engine individually to at least 90 percent N_1 every ten minutes when flying above 15,000 feet and every six minutes when flying below 15,000 feet. These ice clearing procedures are required during level flight or descent and should be continued until entering the landing pattern. At all power settings, monitor engine operation for apparent effects of spinner ice. Periodic ice accretion and uneven shedding can result in high engine vibrations, sometimes evident as "rattles" or "buzz." To clear these vibrations, momentarily and individually advance each engine to at least 90 percent N_1. If the vibrations persist, reduce the thrust setting and descend to a warmer ambient temperature to burn off the ice. The engines are most susceptible to high vibrations when operating at or near 77 percent N_1. It is therefore advisable to avoid continuous power settings in the range of 67 to 87 percent N_1 during extended exposures.

CAUTION

Do not extend the thrust reversers during descent in icing conditions. Cascade icing could adversely affect engine operation during reverse thrust operation after landing.

During flight in air with no visible icing conditions or indication of moisture, it is possible for accumulated moisture in the PT_2 probe line to freeze. This may cause an increase in EPR indication, with RPM, TIT, and fuel flow remaining normal. Turning the engine anti-icing system on should eliminate the ice and restore EPR to normal. Until such time as EPR is restored to normal, observe the normal TIT limits and set engine power by the fan speed (N_1) or the throttle angle of the other engines.

The first visible signs of icing may not always be easily noted by the aircrew. Icing may occur under the following conditions:

(1) Presence of precipitation when the ambient temperature is between 5°C and -10°C.

(2) A dew point spread less than or equal to 3°C when the ambient temperature is between 0°C and -20°C.

CAUTION

Engine icing can result in damage to the fan blades due to ice ingestion. A fan blade inspection is required prior to the next flight after encountering engine icing. Avoid engine operation between 78 and 84 percent N_1, except for transients, after encountering engine icing.

PITOT ICING.

The airplane is equipped with a pitot mast heating element and a pitot head heating element for each pitot probe. The pitot heat system is adequate to prevent pitot icing in heavy icing conditions. In case of malfunction of any heating element in the pilot's or copilot's pitot systems, immediate action should be taken, where practical, to get out of the icing conditions. Since the pitot tubes supply both pitot and static pressure, all pitot static instruments, CADC's, and the variable feel unit will be affected by pitot icing.

Note

If CADC failure occurs due to pitot system icing, turn the related stallimeter system off. Refer to Section I and Section III for systems affected by loss of No. 1 and No. 2 CADC's.

STRUCTURAL ICING.

Windshield.

The "NORM" position of the WINDSHIELD HEAT switches will normally provide satisfactory anti-icing of the windshields. If additional anti-icing is required, select "HIGH" position.

Radome.

The airplane is not equipped with a radome ice protection device and ice readily accumulates in that area. Radome icing can accumulate to the extent that it may break free in pieces of sufficient size to cause structural damage to areas aft of the radome.

OPERATION DURING ICING CONDITIONS.

The following operating techniques are applicable to flights in icing conditions. All operable anti-icing systems should be used as necessary. During weather conditions in which ice or snow is continually accumulating during ground operation, ice accretion may be kept to a minimum by the application of cold, concentrated deicing fluid, Specification MIL-A-8234. Ensure flaps and slats are retracted prior to deicing. Take-off should be made as soon as possible after application. The cold deicing fluid has greater viscosity and will tend to remain longer on the surfaces, affording a longer time period of protection from ice accumulation. If precipitation is moderate to heavy, a final check of the surfaces should be made just before take-off to determine if the surfaces are still free of ice. From the flight station, it is difficult to see ice on the wings. If icing conditions exist, turn on engine anti-ice immediately after engine start to preclude ice buildup during ground operation. Take-off in freezing precipitation is not recommended.

WARNING

Depending on the weight of snow and ice accumulated on the airplane, take-off distances and climb out performance can be seriously affected. The roughness and distribution of the ice and snow could vary stall speeds and characteristics to a dangerous degree. In view of the unpredictable and unsafe effects of such a practice, the ice and snow must be removed before flight is attempted. In cold weather, make sure all instruments have warmed up sufficiently to insure normal operation.

Take-off.

If a take-off must be made on a wet or icy runway, refer to Part 3 of T.O. 1C-5A-1-1 for corrections. If icing conditions are anticipated at any time from engine start to the time that climb power is established, the engine anti-icing system will be turned on prior to taxi. For take-off in icing conditions, the ENGINE ANTI-ICE switches must be placed in the "ON" position and the take-off EPR adjusted by the increment shown on the appropriate take-off thrust setting chart in Part 2 of T.O. 1C-5A-1-1. Slush and water can increase ground run distances significantly due to the increased rolling resistance. Wet, dense slush sometimes results when packed snow partially melts. This presents the worst take-off condition, primarily because the water is prevented from draining off the runway surface. Water alone would present the same problem of increased rolling resistance if it were retained on the surface. Normally the crowned runway design allows water to drain away quickly. Slush, however, is a variable semiliquid that stays in place on the runway. Taking off in slush may produce two effects. First, the airplane may not accelerate as predicted. Actual data on the specific increases in ground run distances are difficult to establish due to the differences in type, density, and depth of slush.

WARNING

Take-offs shall not be attempted with over 1/2 inch of wet snow, slush and/or water, or three inches of dry snow on the runway.

The second effect to be considered when planning a take-off with slush on the runway is possible damage to the airplane from the impingement of slush.

CAUTION

Slush on the runway can cause significant structural damage to the airplane, particularly at high speeds. Water puddles and slush should be avoided if possible.

Note

After take-off on slush or water covered runways, delayed gear retraction is recommended to allow the slipstream to clear the gear wells of slush and water.

Climb.

Ice collected during climb will reduce rate of climb and range. If excessive ice formations remain on the airplane after climbing through an icing layer, level off and increase airspeed to obtain at least 10°C total temperature. If the speed cannot be increased to obtain 10°C total temperature, the ice will sublimate and dissipate more slowly. Do not descend through the icing layer to obtain higher temperatures.

CAUTION

This procedure of increasing airspeed should only be accomplished if all engine surfaces (such as engine duct lip and nose dome) are free of all ice.

Cruise.

If icing conditions occur while operating at either normal rated or military rated thrust, the EPR must be adjusted by the decrement shown on the appropriate thrust setting chart in Part 4 of T.O. 1C-5A-1-1. Additional power or a descent to a lower altitude may be necessary to maintain cruise speed.

CAUTION

If the engine anti-ice is not on before entering icing conditions, ice will accumulate on the engine nacelle lips, inlet guide vanes, and EPR probe.

Descent.

If icing conditions are expected during the descent, turn on the engine anti-ice system at least 10,000 feet above the highest icing level in order to provide adequate warm-up time. If ice accumulates during descent, and if possible, request vectors to preclude shedding ice over densely populated areas. If a substantial amount of ice accumulates during descent, it may be necessary to plan on a slow dissipation of radome ice.

Landing.

When a landing must be made with accumulated ice on the wing and horizontal tail leading edges, special procedures are required. The accumulated wing ice increases airplane stall speed in all configurations. Ice accumulated on the horizontal tail reduces airplane trim capability and airplane stability in the landing configuration.

WARNING

If ice is known or suspected to be on the wing or horizontal tail during landing, the approach speeds should be increased five knots. When the center of gravity is forward of 23% MAC, landings must be made with no more than 62.5% flaps. Refer to T.O. 1C-5A-1-1 for effects of flap position and increased approach speeds on landing distances.

If a landing must be made on a wet or icy runway, refer to Part 9 of T.O. 1C-5A-1-1 for landing ground roll distances, using the applicable RCR to ensure that adequate stopping distance will be available after touchdown.

Note

On runways where normal traction is reduced by moisture, ice, or snow, the airplane will not respond as readily to normal turning forces. Therefore, if any steering corrections are necessary, small nose gear steering movements should be made to produce the best result.

RAIN.

The windshield wiper and rain repellent systems can be activated together; however, use of the wipers is not recommended after the repellent has been applied because the repellent coating will become less effective and visibility will be degraded. For the best visibility during ground operation and during take-off, only the windshield wiper system should be used. The wiper system will provide good rain clearing at airspeeds up to 150 KCAS and adequate rain clearing up to 175 KCAS. However, at airspeeds greater than 150 KCAS, the rain repellent is a better rain removal system. At low approach speeds, the rain repellent system can be used effectively, however, its performance does not exceed that of the windshield wipers because low airspeeds do not provide adequate scavenging of the rain droplets.

CAUTION

Do not operate the windshield wipers on a dry windshield. The wiper motors heat up due to the drag and may cause the thermal switch to trip.

Note

If the windshield wipers are operated at speeds above 150 KCAS, the blades will start to float off the windshield and become ineffective. Operation at higher airspeeds will cause the wipers to stall, making it necessary to reduce airspeed to enable them to park.

Use of rain repellent on a dry windshield, in a light rain or mist, or at airspeeds below 115 KCAS, causes distortion of view because of poor dispersion of the fluid.

Continued use of repellent once the wipers have been used, or after a repellent residue has started to accumulate, will accentuate the problem of reduced visibility and will seriously degrade rain clearing performance.

Cycle flight control surfaces sufficiently after lengthy rainfalls to insure drainage of any water that may have collected in the horizontal stabilizer, elevators, rudders, flaps, etc.

WARNING

Inadequate drainage of rain water could result in freezing upon climb to altitude with potential restriction or immobilization of the control.

TURBULENCE AND THUNDERSTORMS.

CAUTION

Flights through thunderstorms or other areas of turbulence should be avoided whenever possible. Maximum use of radar and weather forecast facilities is essential.

Note

When flying in an area of turbulence (light turbulence or greater as defined in Section V of this manual), uprig the ailerons to indicate a 6-degree wingdown trim position. Airplane performance in this configuration will be degraded as described in T.O. 1C-5A-1-1.

If moderate or severe turbulence or thunderstorms cannot be avoided, the following procedures should be followed:

Turn on the Thunderstorm Lights if necessary.

ATTITUDE: The key to proper flight technique through turbulence is attitude. Both pitch and bank should be controlled by reference to the attitude indicator. Do not change trim after the proper airspeed and attitude is established. Extreme gusts will cause large attitude changes. Use smooth and moderate control inputs to reestablish the desired attitude. To avoid overstressing the airplane, do not make large or abrupt attitude or trim changes.

AIRSPEED: Adjust power to establish a speed of 240 KCAS or 0.74 Mach, whichever is less. Severe turbulence will cause large and rapid variations in airspeed. Do not chase the airspeed.

THRUST: Set thrust as required to maintain the desired penetration airspeed.

ALTITUDE: Severe vertical gusts may cause appreciable altitude deviations. Allow altitude to vary. Sacrifice altitude to maintain the desired attitude. Do not chase the altimeter.

AUTOPILOT: It is desirable to use the autopilot in the basic attitude modes. The altitude hold mode or Mach hold mode should be disengaged. Do not help the autopilot by applying "push" or "pull" inputs on the control column or the exposure to mistrim will be increased. Make as few changes with the autopilot pitch control knob as practicable. With a fixed pitch control knob position, the autopilot will attempt to maintain a constant attitude, and this is the desirable goal. Be alert for an inadvertent autopilot disconnect.

COLD WEATHER OPERATION.

The majority of cold weather operating difficulties are encountered on the ground in preparing the airplane for flight and getting airborne. The following instructions are intended to supplement the normal operating instructions in Section II, and should be followed where applicable as arctic-type weather is encountered.

BEFORE ENTERING THE AIRPLANE.

Even though pre-flight has been accomplished by the ground crew, the flight crew should assure the following checks have been accomplished in addition to the procedure in Section II.

Check that all protective covers have been removed. Inspect engines for internal ice by checking bottom section of front stator blades for evidence of ice, insuring that the fan rotates freely. Check pitot static probes, total temperature probe, and angle-of-attack vanes for ice. Remove ice with airplane electric heaters or ground heaters. Check that the APU intake door and exhaust port and all cargo doors are free of ice. Check that tires are not frozen to the ground.

CAUTION

Engine heat on shutdown melts ice accumulated during flight and the resulting moisture will refreeze in the lower sections of the front stator and rotor blades. An attempted engine start may result in starter failure. If engine is not free to rotate, external heat must be applied to forward engine sections to produce thawing. Start the engines as soon as possible after the application of heat in order to remove all moisture before refreezing can recur.

The air conditioning system auxiliary cooling air inlet doors must be free to open when the air conditioning system is turned on. To check that the doors are free, the air conditioning system may be turned on momentarily with the temperature controls in full cold and at the same time check that the doors open. If they do not open, turn off the air conditioning system. Remove any snow or ice and push in on the doors to assure that they open and close.

CAUTION

The inlet doors must be free to open while the air conditioning system is on; otherwise, the heat exchanger may overheat.

Remove snow from top of fuselage. Heating of the flight station and cargo compartment will melt snow and ice on top of the fuselage forming ice in the vicinity of the pitot static probes and angle-of-attack vanes, and around the clear vision windows.

WARNING

Extreme cold (below -45°F for 6 hours or more) or light snow, ice, or frost deposits will compromise certain aspects of the airplane's emergency escape and safety equipment:

- The flexible gaseous charge hoses between the storage bottles and the escape slides will be extremely stiff. In the event of an emergency deployment, make sure that the hoses do not kink upon placing the slide container over the side of the airplane. Kinking of the hose can result in inadequate inflation of the slide.
- Batteries for the escape slide lights as well as the emergency lights throughout the airplane will likely be low in charge or actually "dead." Alternate means of illuminating the slides or for movement through the airplane should be readily available (e.g., flashlights, etc., that have been kept warm).
- Escape hatches, doors and clear vision windows can freeze closed. Check the hatches, doors and windows to ensure that they will open freely.
- The anchor points (fittings) on top of the airplane for attachment of the personnel restraint harnesses will generally be unuseable because of snow, ice, or frost obstructing the receptacle opening.
- Movement along the top of the airplane will be more precarious. Light frost layers or light icy patches may not be clearly visible.

Check that the airplane exterior surface is free of ice and snow. Under conditions of blowing snow or where the airplane has been exposed to unusual freezing conditions that require the use of Specification MIL-A-8243 deicing fluid or heat on the exposed surfaces, the control surfaces shall be visually inspected for evidence of snow or ice accumulations. All accumulation of snow, ice, and heavy frost must be removed from the control surfaces. During the application of the deicing fluid, the horizontal stabilizer should be positioned leading edge full up (full nose down trim) and all other control surfaces set to neutral, and flaps and slats retracted if possible. Do not chip or scrape ice from the surfaces. After completion of deicing, check the control surfaces for freedom of movement, and work the controls several cycles to allow drainage of the deicing fluid and water.

WARNING

Snow and ice accumulation in any significant degree must be removed from the airplane (especially the control surfaces) prior to flight. Snow or ice accumulation can increase takeoff distances and adversely affect climb-out performance, stalling speed, and handling characteristics. Inflight structural damage can result from vibrations induced by unremoved accumulation.

If snow is left on the radome, it will tend to blow back on the windshield during takeoff and will restrict visibility during that critical period. Also ice or hard snow accumulations remaining on the fuselage may dislodge in flight and impact the empennage with possible damage.

CAUTION

If deicing fluid containing alcohol is used, care should be taken to prevent it from coming in contact with plexiglass or plastic since it will tend to craze or soften these materials. Deicing fluid conforming to Specification MIL-A-8243 does not contain alcohol.

Check that exposed parts of shock struts, actuator pistons, and proximity sensors are clear of snow, ice, and dirt. The exposed piston areas should be wiped with a rag soaked in hydraulic fluid. Check that landing gear downlock pins can be removed. If frozen, apply external heat to free pin lock mechanism.

On airplanes 68307, 70167, 70168 and 70174 not modified by T.O. 1277, after cold soaks approaching overnight duration (e.g., eight hours or more) at ambient temperatures of 0° F and below, the IMU (Inertial Measurement Unit) should be pre-heated through the lower radome access door for a period of at least thirty minutes prior to equipment operation.

ON ENTERING THE AIRPLANE.

After electrical power is on the airplane, postpone the start of MADAR operation until the flight station has warmed above 32°F. Operation attempted at lower temperatures will result in damage to MADAR components. Also, start MADAR with electrical power provided by an APU generator. Avoid power transfers between external and APU sources since the MADAR recording program will likely be disturbed by power surges that are more often experienced during power transfers in cold environments.

Before APU/subsystems start-up, check to insure hydraulic system reservoirs are not overfilled. At very low temperatures, the hydraulic fluid readily foams, and with overservicing, the reservoir vent filters may clog and hinder suction boost feed of the ATM pumps even though electric suction boost pumps are in operation.

Start both APU's as soon as possible, and use the airplane's air conditioning system to warm up the upper deck compartments, and the cargo compartment to whatever extent possible (See Interior Warm Up).

CAUTION

If the on-speed light does not come on within 30 seconds (0° F and above) or 60 seconds (-65° to 0° F) after the APU START light comes on, place the APU CONT switch to "STOP." Do not attempt a restart until the malfunction has been corrected.

Note

During cold temperature operation it is important to obtain a successful start on the first attempt. In order to do so, the APU accumulator must be properly charged. At cold-soak temperatures of -20° to 0°F, the accumulator charge will drop below 3000 PSI. The accumulator must be charged to 3,000 PSI with the hand pump to assure a successful start. At cold-soak temperatures of -20°F and below, the accumulator must be charged to 3,500 PSI. At temperatures from -65° to -40°F, the APU's and the APU accumulators must be preheated. The hand pumps must be worked carefully (avoid fast pumping) to prevent cavitation.

After overnight cold soaks at temperatures below 0°F, sluggish or erratic response can be expected in the course of the fire detector checks. Several attempts may be required to obtain a normal check.

Interior Warm up.

The most effective interior warm up technique with bleed air supplied by the APU's is to heat the areas as required, i.e., compartment by compartment and eliminate all other bleed air demands during the heatup period. Simultaneous operation of both air conditioner units and the cargo floor heat system will result in a slow warm-up (approximately 30 minutes in the upper deck compartments, and approximately 90 minutes to raise the cargo compartment and cargo floor temperatures up to 50°F).

It is preferable to first warm the forward upper deck areas (flight station and relief crew compartment) with left pack selected; AIRFLOW switch in "MAX UPR DECK"; and TROOP COMPT switch in "CLOSE", unless the troop compartment is to be occupied during the warm-up process. As the forward upper deck compartments approach a comfortable level, the troop compartment can next be heated (by positioning the TROOP COMPT switch to "NORM"). After the upper compartments become comfortable, and maximum warm up of cargo compartment is required, set AIRFLOW switch to "MAX CARGO" and AIR COND MASTER switch to "BOTH". If the upper compartments become uncomfortable during cargo compartment heating, select "INTMED" on the AIRFLOW switch until comfort is achieved then switch back to "MAX CARGO."

Note

When the AIRFLOW switch is in the "MAX CARGO" position, the temperature control valves to the upper compartments are driven full closed and temperature control of the left pack output into the cargo compartment must be accomplished by manual selection on the troop compartment temperature selector. To obtain maximum heat from the left pack into the cargo compartment (via Max. Cargo) select manual hot on the troop selector. If this action is not accomplished, the left unit will be supplying cold air into the cargo compartment during the attempted heat-up.

Warm-up of the cargo compartment will be slower than the upper compartments even with the optimum system selection. It will require from 50 to 90 minutes to achieve a 50°F cargo compartment starting from cold soaks of 0°F to -65°F. An alternate system selection for heating the cargo compartment can be selection of the right pack only plus floor heat for 30 to 45 minutes, then both packs, Max. Cargo, manual Hot on troop selector for the remainder of the heat-up. After 30 to 45 minutes, depending on initial soak conditions, the floor heat nozzles will begin to modulate thus making more bleed flow available to the air conditioner packs; both packs must be selected to utilize this available air. This alternate selection provides some concurrent heating of the cargo floor.

For rapid heat-up of the cargo compartment floor, operate just the floor heat system. This system alone will utilize most of the output of two APU's until the floor heat nozzles begin to modulate. The floor will be heated up in 15 to 20 minutes, then other system selections can be made. Never place the FLOOR HEAT switch to "FANS ONLY" when attempting to heat up the cargo compartment or the floor.

Note

"Chugging" or surging of air conditioning pack output may occur during ground operation at very low temperatures below -25°F. This is most likely on the left pack after the upper compartment temperatures have stabilized. Placing any temperature control for the affected system briefly to "Manual Hot" will eliminate this condition. A check of the bleed air manifold pressure gauges for fluctuations will reveal the affected system.

Because of the inherent flexibility in the environmental subsystems, the flight engineers should set up subsystem operation in consideration of the interior areas to be heated, the sequence necessary, the bleed air sources available as well as other loads on the bleed air system that may be concurrent with the heating (e.g., ATM operation for hydraulic power during flight control system checks).

Note

The desired temperatures should be selected with the temperature control rheostat and the system operated under automatic control. Automatic control provides the maximum available duct air temperature during warm up and allows the compartment temperatures to stabilize with a minimum of overshoot. If manual control is used and control valves are driven full open, the duct overheat switch may trip and drive the control valves closed. They will stay closed until manually opened again.

ATM start up may present considerable difficulty after overnight exposure to very cold ground temperature conditions. Violent surging of the ATM hydraulic pump output can be avoided or reduced to an acceptable degree by the low temperature start up technique described below:

(1) On airplanes with electric suction boost pumps for hydraulic systems number 1 and 4 and temperatures below -40°F, operate the pumps for at least ten (10) minutes prior to ATM start up.

(2) On airplanes without electric suction boost pumps for hydraulic systems number 1 and 4 and temperatures below -25°F, preheating of the reservoirs (30 minutes to an hour) will be necessary if the temperature of the cargo compartment has not been maintained near 0°F.

(3) Turn on both ATM's together with the following bleed air and hydraulic systems configuration:

(a) One APU supplying bleed air.

(b) Both air conditioning packs operating.

(c) Both outboard PTU's (1-2 and 3-4) operating.

(4) Cycle on and off the respective PTU (1-2 for Sys 1 ATM, 3-4 for Sys 4 ATM) if necessary to dampen ATM pump output pressure surges that may take place.

(5) After normal ATM operation is obtained, configure bleed air supply, air conditioning, and PTU operation as required.

CAUTION

Upon start up of hydraulic systems after exposure to extreme low temperatures, be alert for signs of severe cavitation of the ATM pumps, PTU's, or engine pumps. Violent pressure fluctuations or failure of pressure to build up, and considerable heating may indicate occurrence of serious cavitation that can result in ending or shortening the life of the pump. The affected hydraulic system should be promptly shutdown. Intermittent brief restart attempts along with continued operation of the system electric suction boost pump may ultimately produce normal operation. Other cases, however, may require more extensive corrective action, e.g., heating of reservoir, pump, or inlet lines; remedying suction blockage, etc.

CAUTION

After cold soaks of 16 hours or longer at temperatures below -25°F, leaks may occur at landing gear components in the wheel wells, at hydraulic components in the cargo compartment, as well as at other random points in the utility and flight control subsystems throughout the airplane when the hydraulic systems are pressurized. An inspection for leaks should be immediately accomplished through the airplane upon pressurization of the hydraulic systems. Ground crew assistance should be provided to the scanner for this purpose while the flight engineer monitors fluid quantity indicators for significant losses. Major leaks will require shutdown of the affected system for corrective action. Self warming of the hydraulic subsystem during initial operation will not be sufficient to cause the leaks to stop. Preheating of the various manifold assemblies will be necessary, or the cargo compartment temperatures maintained near 0°F following shutdown on the previous flight.

Perform the crosswind BITE check after approximately 20 minutes of hydraulic system operation. Fault indications appear when the check is made with the hydraulic system fluid still cold.

CAUTION

After the airplane has been subjected to cold soaks of 10 hours or more at ground ambient temperatures of -25°F (and below), logic circuitry control units (integrated circuitry) for kneeling, crosswind, and retraction functions may operate erratically. These control units should be preheated for 20 to 30 minutes before any kneeling operation, ground retraction test, or taxi-out for take-off. Alternatively, these units may be warmed by heating of their compartments either from external heaters or the airplane's environmental subsystem. Warm air applied directly to the units should be no more than about 100°F to avoid excessive heating. Even after proper external warming of the control units, adverse effects from the cold may remain.

Cycle all control surfaces a sufficient number of times in the course of the preflight checks to insure operation is normal and is in no way hampered by ice or snow deposits not apparent from visual inspection.

CAUTION

When operating the wing flaps, the flap position indicator should be closely observed for positive movement. If the flaps should stall, immediately place the flap lever to the position where flap movement stopped.

The fuel quantity indicators may not test properly until the flight station has warmed.

After soaks below 0°F, allow the flight station to warm prior to operating the pressurization controls.

CAUTION

The pressurization controls may be damaged if worked when cold and stiff.

After exposure to ground ambient temperatures below -25°F, check fire handles for freedom of movement. If a fire handle does not move, external heat will be necessary to thaw a cable operated fuel shutoff valve that has probably frozen. Pressurization of the respective wing bleed manifold with APU bleed air will not provide sufficient heat for this purpose.

Pylon bleed air valves and engine starter valves may not operate properly. Check both valves for proper operation and apply heat well in advance of engine starts (at completion of bleed duct and overheat checks).

Following exposure of the airplane to ground temperatures below -25°F, insure that functional checks of all avionics equipment have been accomplished after sufficient warming (for about 20-30 minutes) of the flight station and equipment compartments. Since cargo compartment warming will be negligible, open the avionics compartment doors to receive heat from forward upper deck warmup. Equipment reliability is reduced in the cold environment and the checks should be accomplished well before engine starts to allow time for any corrective action necessary.

Kneel Subsystems Operation (Pneumatic Kneeling).

Initial operation of the main landing gear kneel drive modules will be extremely slow following even short exposure of the airplane to very cold ambient temperatures. Self warming of the drive modules can be accomplished by kneeling the forward pair of MLG, or single MLG's as necessary (depending on the airplane gross weight or where only one MLG kneel module is sluggish). Individual kneeling of 60 to 80 turns and then unkneeling should warm the drive modules sufficiently to allow full kneeling of the airplane to be undertaken.

Cargo Access Operation.

Visor locks should be operated by manual override controls and checked for all locks released prior to raising visor. After cold soaks at very low temperatures, some of the locks may not fully release.

CAUTION

If snowfall, sleet, or blowing snow conditions have taken place while the aft complex has been open, insure mechanical lock tracks on the aft side doors are clear of all snow, ice, etc., before operating.

Cargo On/Off Loading Operations.

To obtain adequate traction for self-propelled vehicle drive-in loading through the aft complex, remove even light snow (or ice) accumulations from aft ramp, toes, and pressure door (as ramp extension) along with a sufficient area on the ground aft of the ramp.

CAUTION

Shoring for high footprint vehicles over the aft ramp and pressure door (as ramp extension) should be fully secured. The shoring should have surface characteristics that will provide adequate traction for the drive-in loading.

Lightweight, low powered, self-propelled vehicles (e.g., small forklifts) may have considerable difficulty driving up forward or aft ramps during rain or snow conditions because of smooth tread tires and/or inadequate anti-skid material on the ramp or extension surfaces. If the vehicle (of not more than 15,000 pounds) can be fully placed aboard the ramp (not the ramp extension), raise the ramp to the level position to allow the vehicle to proceed into the cargo compartment.

BEFORE STARTING ENGINES.

The windshield heat control system will not function automatically if the temperature of the windshield glass is below -40°C. The COLD START switch must be used to raise the temperature of the glass into the normal operating range. Operation of the COLD START switch should be accomplished only while the WINDSHIELD HEAT switches are in "NORM." Touch panels with bare hand to check that heat is being applied.

CAUTION

Do not exceed the operating duty cycle of five seconds on, ten seconds off, when operating the COLD START switch.

Just before engine start, when ice or snow is continually accumulating, ice accretion may be kept to a minimum by the application of cold concentrated Specification MIL-A-8243 deicing fluid to the previously deiced surfaces. Takeoff should be made as soon as possible after application. The cold deicing fluid has greater viscosity and will tend to remain longer on the surfaces, affording a longer time period of protection from ice accumulation.

STARTING ENGINES.

The indicated oil pressure will rise rapidly to the normal operating range and may exceed 100 PSI when starting a cold soaked engine during very cold weather (-25°F and below). The throttle should remain in "IDLE" until the oil pressure is within the normal operating range. A sudden loss of oil pressure in cold weather is usually due to a broken line or damaged seal. If oil pressure drops to zero, shut down the engine.

In the event an engine experiences a "hung" start; i.e., engine speed (N_2) will not accelerate to idle, stalling in the 50 to 60% range; shutdown will be necessary. Correct the difficulty by application of external heat to the fuel control. "Hung" engine starts are also possible on restarts after a brief period (5-10 minutes) of engine shutdown between engine operation and restart.

Engine inlet components are susceptible to icing during ground operation, even when the OAT is above freezing under certain atmospheric conditions. If OAT is 8°C or below and if visible atmospheric moisture is present, the engine anti-icing should be turned on before taxiing.

WARMUP AND GROUND TEST.

Inspect instruments for normal operation.

WARNING

In cold weather, make sure all instruments have warmed up sufficiently to ensure normal operations. Check for sluggish instruments before and during taxiing.

TAXIING.

Use thrust as necessary to initiate airplane movement and achieve taxi speed. Thrust requirements to start rolling and during taxiing will vary depending upon surface conditions in low temperatures whether moving over cleared hard surface, hard packed snow, icy patches, loose snow in varying depths, or slush.

CAUTION

Taxi extremely slow on slippery taxiways, i.e., approximately five (5) knots.

CAUTION

Avoid use of thrust reversers during taxiing in loose snow or ice fog conditions in order to preclude obscurement of visibility.

Nose wheel steering, differential braking, and asymmetrical thrust should be used to maintain directional control. Avoid use of outboard engines for asymmetric thrust when these engines are trailing over snow banks and other than clear or packed surfaces, on or off the taxiway.

To accomplish turns during taxiing over slippery surfaces:

(1) Maintain taxi speed of five knots upon entry into the turn.

(2) Select "CASTER" prior to entering the turn.

(3) Select "CENTER" approximately 45° prior to completing the turn.

CAUTION

At taxi speeds greater than five (5) knots on slippery surfaces, skidding of the airplane can be expected with:

(1) Nose wheel steering inputs over 20°.

(2) Power back of the aft MLG.

Skidding of either the nose gear or the aft MLG may occur. Immediate decrease of the nose gear steering angle may help to control skidding.

For minimum turns, use 45° nose wheel position, aft MLG castering, inside braking, and asymmetric power. However, intermittent braking will be necessary to maintain the required taxi speed of five (5) knots upon application of asymmetric power. Also, power back the aft MLG immediately coming out of the turn (Reference Section V).

CAUTION

Significant increases in turning radius must be expected when taxiing on ice or snow covered surfaces. Taxi speed upon entering the turn directly influences the turning radius and speed should be held to a maximum of five knots.

Note

The nose wheel steering must be used with care or nose wheel skidding will occur on all types of surfaces. This problem is accentuated on surfaces with low RCR. Turns must be entered with low taxi speeds and moderate rates of steering input. Turns can be performed with a nose wheel deflection of 60 degrees; however, the steering input must be applied smoothly and at a moderate rate. The nose wheel should be closely monitored to decrease the angle at the first indication of nose wheel skidding.

Check brake and nose wheel steering for proper operation [illegible]r initial airplane movement from the parking area. Taxi at reduced speed and increase the interval between airplanes. Be especially careful in maneuvering near other airplanes because the jet blasts of their engines will blow snow and slush that may freeze into ice on contact. Avoid taxiing in deep snow or slush because taxiing will be more difficult and the brakes and gear may freeze after take-off.

CAUTION

Use extreme caution when taxiing on ice covered taxiways and runways since braking action is much less effective on ice.

Note

If ice fog conditions prevail, determine runway visibility in regard to take-off minimums. Since the airplane engines can generate large quantities of ice fog, airfield visibility can be expected to decrease following engine starts, taxiing, or holding for take-off. Prior to engine starts, arrange for an expeditious taxi-out and take-off with the appropriate agencies. However, the additional ice fog generated by the airplane engines may lower the visibility below take-off minimums.

BEFORE TAKE-OFF.

If the airplane surfaces are cleared of ice subsequent to preflight, check spoiler operation.

The FUEL HEATER switches should be placed to "ON" for one minute at idle RPM prior to take-off whenever the fuel temperature is below 0°C, but should not be used during take-off.

If icing conditions are not anticipated until after climb power is established, use of anti-icing systems may be delayed until that time. Use of bleed air anti-icing systems can increase the take-off run and reduce the climbout capability. Refer to Parts 2 and 3 of T.O. 1C-5A-1-1. Turn engine anti-ice "ON" if required prior to take-off.

TAKE-OFF.

Unless airplane performance dictates otherwise, a rolling take-off should be planned. If standing take-off procedures are used and skidding occurs prior to obtaining take-off EPR, the take-off shall be aborted. Performance planning for a subsequent take-off under these conditions shall be computed using rolling take-off procedures. Refer to Part 3 of T.O. 1C-5A-1-1 for the effects of runway surface on take-off performance. On the initial part of the take-off roll, directional control must be maintained with rudder pedal nose wheel steering. Nose wheel steering has reduced effectiveness on wet or icy runways. After the rudder becomes effective (approximately 60 knots), do not hold the yoke forward in an attempt to increase nose wheel effectiveness. Failure to follow this technique will cause the aft main bogies to become airborne prior to rotation and may decrease braking capability if an aborted take-off is necessary. The rudder, when it becomes effective, should be employed to aid nose wheel steering in maintaining directional control.

Note

Refer to Section II for amplification of normal take-off, critical field length, and obstacle clearance procedures.

AFTER TAKE-OFF.

Landing gear retraction time will be longer after 6 hours or more exposure to ground temperatures below -25° F. The MLG retraction time may be as much as 40 seconds, and the NLG may require as much as 2 minutes.

WARNING

After 6 hours or more exposure to temperatures below -25° F, the climb out flight path obstacle height must be corrected to account for the reduced climb capability during the longer gear retraction time period.

To ensure adequate clearance, add the obstacle height correction tabulated in Part 3 of T.O. 1C-5A-1-1.

DURING FLIGHT.

Follow normal procedures.

Note

If operating in icing conditions, the anti-icing systems should be turned "ON" as required; refer to Icing and Rain in this section. Monitor pylon bleed valves for inadvertent closing. If closure occurs, the anti-ice switch may have to be cycled off and on for the affected engine or its throttle retarded momentarily.

If "chugging" or pulsating of an air conditioning subsystem occurs, the effect may be eliminated by briefly selecting "HOT" with any temperature control (e. g., Flight Station Relief Crew, etc.) of the affected subsystem (L. or R.). Fluctuation of the bleed air manifold pressure gauges will indicate the affected subsystem. This check should be made with the wing isolation valves closed.

If a FILTER DIF PRESS light comes on and the indicated fuel temperature is below 0°C, place the FUEL HEATER switch to "ON" for approximately one minute. If the light does not go out, the blockage is due to other than ice or the indicating system is faulty. In either case, do not continue to operate the heater.

LANDING.

Refer to Part 9 of T.O. 1C-5A-1-1, using the applicable wind, runway RCR, and airplane configuration factors to ensure that adequate stopping distance will be available after touchdown. The proper position of the airplane on the glide path and correct approach speeds become very significant with low ceilings and visibilities coupled with adverse landing conditions. If making an approach in low ceiling and visibility conditions, be especially alert for the possibility of a missed approach. After touchdown, directional control is maintained primarily with rudder, especially on slippery runways. Follow the normal landing procedure in Section II. Use of thrust reversers at low speeds may blow loose ice and snow forward, restricting the pilot's visibility. Refer to Taxiing in this section for taxi procedures.

AFTER LANDING.

Use normal procedures. Where possible, park the airplane where towing will not be necessary because towing the airplane at high gross weights may be extremely difficult on snow-packed parking areas.

ENGINE SHUTDOWN.

Prior to shutdown, leave the pylon BLEED AIR switches in the "ON" position. This will allow the spring-loaded valves to close slowly when the bleed air manifolds are depressurized and preclude freezing in the closed position. When the manifolds are again pressurized, the valves will open and some heat may reach frozen engine starter valves.

Retract flaps and slats to prevent entry of snow, sleet, etc., into the respective gaps.

POSTFLIGHT.

Have wheel chocks in place so the parking brakes can be released. If moisture has entered the brake assemblies, leaving the parking brakes released will forestall the possibility of the brakes freezing in position. Service the toilet facilities and remove all water, coffee, and other liquids which might freeze. Check that engine inlet and exhaust protective covers, pitot tube covers, and air conditioning inlet covers are installed. If freezing rain, sleet or hail is forecast, install windshield cover. Remove ice and dirt from shock struts.

The engine inlet and exhaust covers should be installed when the probability of FOD, blizzards, severe winds, etc., is high, or when anticipated downtime is to be lengthy.

During periods of prolonged exposure of the airplane to temperatures below 0°F, insure temperature sensitive support equipment aboard (AGE, etc.) is removed from the airplane. This type of gear (avionics test equipment, IDNE Programmers, certain flight crew personal gear) may not withstand severe cold soaks.

HOT WEATHER AND DESERT OPERATION.

High temperatures, alone or coupled with high or low humidity and blowing sand and dust, will complicate normal operations. Proper protection and inspection

of the airplane while it is on the ground, and observance of the precautions covered in this Section, will assure successful operation. Refer to T.O. 1C-5A-1-1, to determine the adverse effects of high temperature on airplane performance.

BEFORE ENTERING THE AIRPLANE.

Inspect the tires and shock struts for proper inflation and check the accumulators for proper air charge. Be alert for hydraulic leaks. Check that dust and sand have been removed from landing gear struts and other hydraulic actuator pistons. Inspect hatch and door seals for deformation and damage due to high temperatures. Remove all protective covers and dust plugs. Be sure the airplane is positioned to avoid blasting, sand, dust, etc., on adjacent equipment or buildings during engine starts.

IMU's (Inertial Measurement Units) will overheat during alignment in extreme hot desert areas. Approximately fifteen minutes of external cooling applied through the radome access door should be sufficient to reduce internal radome temperatures when airfield ambient temperatures are as hot as 115°F.

See 15.84

CAUTION

When operating the MMR/IDNE systems on a hot day, if temperature within the nose radome is greater than 131°F but less than 160°F, ground operation shall be limited to 30 minutes. If the temperature is above 160°F, the MMR/IDNE shall have external cooling applied to reduce the temperature within the nose radome compartment to below 131°F prior to operation.

AFTER ENTERING THE AIRPLANE.

Check instruments and electrical equipment for excessive moisture due to high humidity. If operating in a dusty location, check for accumulated dust at control, instrument, and electronic equipment areas inside the airplane. Check that survival kits appropriate to the route of flight are stowed aboard.

Start both APU's and begin air conditioning operation as soon as possible. After the airplane has been soaking in hot climates, personnel compartments can be most effectively cooled as follows:

(1) Cool the flight station, relief crew, and courier compartments first during flight engineer's operational preflight (Interior Inspection) in the following configuration:

Left Pack - Operating from both APU's
Airflow - Max Upper Deck
Temperature - Automatic 12 o'clock position (All Selectors)
Troop Compartment Valve - Closed
Gasper Nozzles - All Open
Compartment Exterior Doors,
Hatches, and
Windows - Closed (flight station ladder, environmental compartment, and relief crew service doors; emergency exit hatches; pilot's windows)

(2) After 20-30 minutes, the flight deck compartments should be cooled sufficiently to then open troop compartment valve.

STARTING ENGINES.

Use normal starting procedures.

Note

At extreme high temperatures, bleed air from both APUs will be necessary to start an engine if the ATMs are operating.

TAXIING.

Use the brakes as little as possible during taxiing since brake cooling is retarded by high ambient temperatures. Keep sufficient distance between airplanes to prevent sand and dust from blowing into the engines. Use only the inboard engines during taxiing whenever the outboard engines are near or past the edges of paved taxi surfaces. Considerable sand or dust can be raised by the acceleration of engines over unpaved surfaces.

BEFORE TAKE-OFF.

If take-off conditions permit (gross weight, runway length, ambient temperature), set TRT with a considerable distance of paved surface behind the airplane to prevent the generation of giant dust clouds (up to 500 feet in height) over the approach end of the runway.

Note

When take-off requirements are critical in extreme high temperature environments, check during flight planning to insure temperatures provided by the tower are representative for the runway and not adjusted from values recorded elsewhere on the airfield.

TAKE-OFF.

Strict adherence to recommended take-off and climb-out speeds is necessary during extreme high temperature operations because airplane performance decreases with temperature rise. Refer to Part 3 of T.O. 1C-5A-1-1.

CLIMB.

Use the normal climb procedure.

Note

Temperatures above standard day conditions will decrease overall airplane performance. Rate of climb will decrease while climb time, climb fuel, and climb range increase. Refer to Part 4 of T.O. 1C-5A-1-1.

DURING FLIGHT.

To prevent possible damage to the engines, avoid flying through dust or sand storms. To determine the effects of temperature on range and endurance, refer to Parts 5 and 6 of T.O. 1C-5A-1-1.

DESCENT.

Use the normal descent procedure.

APPROACH AND LANDING.

During landings at airfields where temperatures are extremely high, carefully adhere to the normal landing procedures. Anticipate longer ground rolls (Refer to T.O. 1C-5A-1-1, Part 9). Do not attempt approaches at less than recommended approach speed over the end of the runway. Use care during braking operations to avoid overheating the brakes.

CAUTION

Check maximum tire speeds for high temperature and/or high pressure altitudes (Refer to Part 9 of T.O. 1C-5A-1-1).

PARKING.

If blowing dust or sand is anticipated, park the airplane with the nose pointed into the prevailing or forecasted wind (flaps and slats retracted). This precaution may reduce the accumulation of dust and sand along the trailing edges of the wings and on the actuating mechanisms for the ailerons, flaps, and spoilers.

STOPPING ENGINES.

Use the normal procedures for stopping the engines. Have the wheel chocks inserted as soon as the parking position has been reached and release the parking brakes to aid in brake cooling.

WARNING

After the chocks are in place following maximum performance landings or excessive braking, personnel should stay clear of the main landing gear areas until the brakes have cooled.

BEFORE LEAVING THE AIRPLANE.

For brief stopovers (cargo or passenger pick-up), leave the doors, windows, and hatches open for natural ventilation except in dusty or rain conditions. During prolonged ground times, install all protective covers and close up the airplane as a precaution against unexpected adverse conditions (rain, dust, or sand storms).