T.O. 1H-21(Y)-4
(FORMERLY AN 01-250HDA-4)

RECEIVED
6 JUN 1957
TRANS SUP SECTION
NEW CUMBERLAND
GENERAL DEPOT
PENNA

ILLUSTRATED PARTS BREAKDOWN

USAF SERIES
YH-21, H-21A & H-21B
AND
ARMY MODEL
H-21C
HELICOPTERS

REVISION NOTICE

LATEST REVISED PAGES SUPERSEDE THE SAME PAGES OF PREVIOUS DATE

Insert revised pages into basic publication. Destroy superseded pages.

PUBLISHED UNDER AUTHORITY OF THE SECRETARY OF THE AIR FORCE
AND THE CHIEF OF THE BUREAU OF AERONAUTICS

R13

Vertol Aircraft Corp., Morton, Pa.—2325—5-17-57

15 OCTOBER 1956
REVISED 15 APRIL 1957

Reproduction for non-military use of the information or illustrations contained in this publication is not permitted without specific approval of the issuing service (BuAer or USAF). The policy for use of Classified Publications is established for the Air Force in AFR 205-1 and for the Navy in Navy Regulations, Article 1509.

LIST OF REVISED PAGES ISSUED

INSERT LATEST REVISED PAGES. DESTROY SUPERSEDED PAGES.

NOTE: The portion of the text affected by the current revision is indicated by a vertical line in the outer margins of the page.

Page No.	*Date of Latest Revision*
* B	15 April 1957
* C	15 April 1957
i	15 January 1957
* ii	15 April 1957
* 4	15 April 1957
* 5	15 April 1957
* 6	15 April 1957
7	15 January 1957
8	15 January 1957
9	15 January 1957
10	15 January 1957
11	15 January 1957
* 12	15 April 1957
12A	15 January 1957
* 13	15 April 1957
14	15 January 1957
* 15	15 April 1957
16	15 January 1957
* 16A	15 April 1957
* 16B	15 April 1957
* 16C	15 April 1957
* 17	15 April 1957
* 23	15 April 1957
* 26	15 April 1957
* 27	15 April 1957
* 31	15 April 1957
* 32	15 April 1957
* 33	15 April 1957
* 34	15 April 1957
* 36	15 April 1957
* 37	15 April 1957
38	15 January 1957
* 40	15 April 1957
* 41	15 April 1957
* 42	15 April 1957
* 44	15 April 1957
* 46	15 April 1957
* 47	15 April 1957
* 48	15 April 1957
* 48A	15 April 1957
* 48B	15 April 1957
* 49	15 April 1957
* 50	15 April 1957
51	15 January 1957
* 52	15 April 1957
* 52A	15 April 1957
* 53	15 April 1957
* 54	15 April 1957
* 55	15 April 1957
* 56	15 April 1957
* 57	15 April 1957
* 58	15 April 1957
* 59	15 April 1957
* 60	15 April 1957
* 60A	15 April 1957
* 61	15 April 1957
* 66	15 April 1957
69	15 January 1957
71	15 January 1957
* 72	15 April 1957
* 73	15 April 1957
* 74	15 April 1957
75	15 January 1957
* 76	15 April 1957
* 77	15 April 1957
78	15 January 1957
* 79	15 April 1957
* 80	15 April 1957
* 81	15 April 1957
* 82	15 April 1957
* 83	15 April 1957
* 84	15 April 1957
* 95	15 April 1957
* 97	15 April 1957
* 98	15 April 1957
99	15 January 1957
*101	15 April 1957
*129	15 April 1957
*133	15 April 1957
*134	15 April 1957
*137	15 April 1957
*138	15 April 1957
*140	15 April 1957
150	15 January 1957
151	15 January 1957
152	15 January 1957
153	15 January 1957
159	15 January 1957
*161	15 April 1957
162	15 January 1957
163	15 January 1957
164	15 January 1957
165	15 January 1957
166	15 January 1957
168	15 January 1957
169	15 January 1957
172	15 January 1957
175	15 January 1957
176	15 January 1957
177	15 January 1957
*182	15 April 1957
*182A	15 April 1957
184	15 January 1957
*187	15 April 1957
*188	15 April 1957
*189	15 April 1957
*190	15 April 1957
*191	15 April 1957
193	15 January 1957
194	15 January 1957
194A	15 January 1957
194B	15 January 1957
*194C	15 April 1957
*195	15 April 1957
196	15 January 1957
*197	15 April 1957
*198	15 April 1957
*199	15 April 1957
*200	15 April 1957
201	15 January 1957
*202	15 April 1957
*204	15 April 1957
*205 Deleted	15 April 1957
*206 Deleted	15 April 1957
*207 Deleted	15 April 1957
213	15 January 1957
215	15 January 1957
*218	15 April 1957
*219	15 April 1957

* The asterisk indicates pages revised, added or deleted by the current revision.

USAF

ADDITIONAL COPIES OF THIS PUBLICATION MAY BE OBTAINED AS FOLLOWS:

USAF ACTIVITIES.—In accordance with Technical Order No. 00-5-2.
NAVY ACTIVITIES.—Use Publications and Forms Order Blank (NavAer 140) and submit in accordance with instruction listed thereon.
For listing of available material and details of distribution see Naval Aeronautics Publications Index NavAer 00-500.

LIST OF REVISED PAGES ISSUED

Page No.	Date of Latest Revision
222	15 January 1957
223	15 January 1957
*224	15 April 1957
*227	15 April 1957
229	15 January 1957
231	15 January 1957
*235	15 April 1957
*237	15 April 1957
*239	15 April 1957
*241	15 April 1957
*242	15 April 1957
*243	15 April 1957
*245	15 April 1957
*249	15 April 1957
*250	15 April 1957
252	15 January 1957
*253	15 April 1957
*263	15 April 1957
*265	15 April 1957
*266	15 April 1957
*266A	15 April 1957
267	15 January 1957
268	15 January 1957
*270	15 April 1957
*271	15 April 1957
*272	15 April 1957
287	15 January 1957
288	15 January 1957
292	15 January 1957
*294	15 April 1957
*295	15 April 1957
*300	15 April 1957
*300A	15 April 1957
*301	15 April 1957
*302	15 April 1957
*303	15 April 1957
305	15 January 1957
*306	15 April 1957
*307	15 April 1957
308	15 January 1957
308A	15 January 1957
309	15 January 1957
312	15 January 1957
312A	15 January 1957
*314	15 April 1957
315	15 January 1957
*316	15 April 1957
318	15 January 1957
319	15 January 1957
320	15 January 1957
320A	15 January 1957
321	15 January 1957
*325	15 April 1957
*327	15 April 1957
*328	15 April 1957
*333	15 April 1957
*335	15 April 1957
*336	15 April 1957
*339	15 April 1957
*340	15 April 1957
*341	15 April 1957
*342	15 April 1957
*343 Deleted	15 April 1957
*344	15 April 1957
*345	15 April 1957
*346	15 April 1957
*346A	15 April 1957
*346B	15 April 1957
*346C	15 April 1957
*346D	15 April 1957
*346E	15 April 1957
*347	15 April 1957
349	15 January 1957
353	15 January 1957
354	15 January 1957
*356	15 April 1957
*357	15 April 1957
358	15 January 1957
363	15 January 1957
*365	15 April 1957
*366	15 April 1957
*367	15 April 1957
*368	15 April 1957
*368A	15 April 1957
*375	15 April 1957
*376	15 April 1957
378	15 January 1957
379	15 January 1957
381	15 January 1957
382	15 January 1957
384	15 January 1957
*385	15 April 1957
386	15 January 1957
*387	15 April 1957
*388	15 April 1957
*389	15 April 1957
*390	15 April 1957
*391	15 April 1957
*392	15 April 1957
*393	15 April 1957
*395	15 April 1957
*396	15 April 1957
*397	15 April 1957
398	15 January 1957
399	15 January 1957
*401	15 April 1957
*402	15 April 1957
*405	15 April 1957
406	15 January 1957
407	15 January 1957
*408	15 April 1957
*409	15 April 1957
*418	15 April 1957
422	15 January 1957
424	15 January 1957
425	15 January 1957
426	15 January 1957
427	15 January 1957
429	15 January 1957
*430	15 April 1957
431	15 January 1957
*432	15 April 1957
*433	15 April 1957
*434	15 April 1957
435	15 January 1957
436	15 January 1957
437	15 January 1957
438	15 January 1957
*439	15 April 1957
*442	15 April 1957
446	15 January 1957
*446A	15 April 1957
447	15 January 1957
*448	15 April 1957
*450	15 April 1957
452	15 January 1957
*452A	15 April 1957
*453	15 April 1957
454	15 January 1957
*463	15 April 1957
*465	15 April 1957
*468	15 April 1957
469	15 January 1957
478	15 January 1957
*479	15 April 1957
*482	15 April 1957
*483	15 April 1957
*484	15 April 1957
*485	15 April 1957
*486	15 April 1957
*487	15 April 1957
*488	15 April 1957
*489	15 April 1957
*490	15 April 1957
*491	15 April 1957
*492	15 April 1957
*493	15 April 1957
*494	15 April 1957
*495	15 April 1957
*496	15 April 1957
*497	15 April 1957
*498	15 April 1957
*499	15 April 1957
*500	15 April 1957
*502	15 April 1957
*503	15 April 1957
*504	15 April 1957
*505	15 April 1957
*506	15 April 1957
*507	15 April 1957
*508	15 April 1957
*509	15 April 1957
*510	15 April 1957
*512	15 April 1957
*513	15 April 1957
*514	15 April 1957
*515	15 April 1957
*516	15 April 1957
*517	15 April 1957
*518	15 April 1957

* The asterisk indicates pages revised, added or deleted by the current revision.

LIST OF REVISED PAGES ISSUED

Page No.	*Date of Latest Revision*
*519	15 April 1957
*520	15 April 1957
*521	15 April 1957
*522	15 April 1957
*523	15 April 1957
*524	15 April 1957
*524A	15 April 1957
*525	15 April 1957
*526	15 April 1957
*527	15 April 1957
*528	15 April 1957
*529	15 April 1957
*530	15 April 1957
*531	15 April 1957
*532	15 April 1957
*533	15 April 1957
*534	15 April 1957
*535	15 April 1957
*536	15 April 1957
*537	15 April 1957
*538	15 April 1957
*538A	15 April 1957
*538B	15 April 1957
*539	15 April 1957
*540	15 April 1957
*541	15 April 1957
*542	15 April 1957
*543	15 April 1957
*544	15 April 1957
*544A	15 April 1957

* The asterisk indicates pages revised, added or deleted by the current revision.

TABLE OF CONTENTS

Figure		Page
I	**INTRODUCTION**	1
	Contractor's Part Numbering System	2
	Source Code Definitions	3
	Manufacturers' Code Symbols	4
	How to Use the Illustrated Parts Breakdown	7
	Usable On Codes	8
1	Exploded View of the Helicopter	17
	Graphical Index	18
II	**GROUP ASSEMBLY PARTS LIST**	19
	ROTOR	
2	Rotor Hub	20
3	Wooden Rotor Blades	22
3A	Metal Rotor Blades	28
4	Rotor Controls	30
5	Rainshield	35
	TAIL	
6	Tail Section	36
6A	Stabilizer Attachment Fittings	40
	STRUCTURE	
7	Fuselage, YH-21 and H-21A	42
8	Fuselage, H-21B and H-21C	46
9	Alighting Gear Supports	52
10	Engine Mount Attachment Fittings and Bushings	56
11	Transmission Supports	58
12	Tiedown Fittings, Jacking Pads, and Leveling Lugs	62
13	Work Platforms, YH-21, H-21A, H-21B, and H-21C	64
14	Work Platforms, H-21B and H-21C	67
15	Cabin and Cockpit Flooring	69
16	Access Doors and Panels	74
17	Nose Enclosure and Windows	80
18	Cabin and Rescue Doors, YH-21 and H-21A	85
18A	Cabin and Rescue Doors, H-21B and H-21C	92
19	Engine Air Exit Doors, Hatch, and Keel	100
20	Pulley Brackets and Pulleys, YH-21 and H-21A	104
21	Pulley Brackets and Pulleys Installation, H-21B and H-21C	114
22	Pulley Bracket Assemblies and Pulleys, H-21B and H-21C	121
	ALIGHTING GEAR	
23	Main Alighting Gear, YH-21	128
24	Main Alighting Gear (With Type A V-Brace), H-21A, H-21B, and H-21C	132
24A	Main Alighting Gear (With Type B V-Brace), H-21A, H-21B, and H-21C	136
25	Auxiliary Alighting Gear, YH-21	139
26	Auxiliary Alighting Gear, H-21A, H-21B, and H-21C	142
26A	Main Alighting Gear Float, YH-21	145
26B	Main Alighting Gear Float, H-21A	151
26C	Auxiliary Alighting Gear Float, YH-21	156
26D	Auxiliary Alighting Gear Float, H-21A	162
	POWER PLANT	
27	Power Plant	167
28	Accessory Installation	170
29	Oil System	174
30	Oil Tank, YH-21 and H-21A	178
30A	Oil Tank, H-21B and H-21C	181
31	Demountable Fuel System	183
32	Fuselage Fuel System	186
32A	Auxiliary Fuel System	193
32B	Auxiliary Fuel Tank Release and Supports	196
33	Cooling System	200
34	Engine Cooling Fan	208
35	Supercharger Clutch Control Actuator	211
36	Exhaust Collector	212
37	Exhaust Collector Shroud	214
38	Engine Mount with Eight Dynafocals	216
39	Fire Detector	218
	DRIVE	
40	Drive System	220
41	Central Transmission and Clutch	221
42	Forward Transmission	224
43	Aft Transmission	226
44	Drive Shafting	228
45	Engine Drive Shaft	232
46	Forward Transmission Lubrication Piping	234
47	Central Transmission Lubrication Piping	236
48	Aft Transmission Lubrication Piping	238
49	Transmission to Cooler Lubrication Piping	240
	CONTROLS	
50	Flight Controls	244
51	Cockpit Controls	247
52	Pedal Controls	249
53	Longitudinal Stick Positioner	254
54	Cyclic Control Stick, Boots, and Indicator	258
55	Lower Differential Control, YH-21 and H-21A	263
55A	Lower Differential Control (Special Spare Parts Assembly)	267
56	Lower Differential Control, H-21B and H-21C	268
56A	Lower Differential Control (Special Spare Parts Assembly)	273
57	Collective Pitch Installation	274
58	Pilot's Collective Pitch Lever	278
59	Co-Pilot's Collective Pitch Lever	283
60	Centering Springs	286
61	Hydraulic Actuators	289
62	Idler Bellcranks	292
63	Auxiliary Alighting Wheel Lock	297
64	Forward Upper Controls	300
64A	Forward Upper Controls Quadrant Assembly	301
65	Forward Upper Controls Bellcrank Assembly	305
65A	Forward Upper Controls Bellcrank Assembly (Special Spare Parts Assembly)	310
66	Aft Upper Controls	312

TABLE OF CONTENTS (continued)

Figure		Page
	CONTROLS (continued)	
66A	Aft Upper Controls Quadrant Assembly	313
66B	Aft Upper Controls Bellcrank Assembly	317
66C	Aft Upper Controls Bellcrank Assembly (Special Spare Parts Assembly)	322
67	Forward Collective Pitch Bungee	324
68	Aft Collective Pitch Bungee	326
69	Longitudinal Bungee Installation	329
70	Longitudinal Bungee	332
71	Engine Controls	334
72	Cockpit Section Engine Controls	337
73	Engine Section Controls	339
	EQUIPMENT	
74	Miscellaneous Equipment	344
74A	Insulation Installation, YH-21 and H-21A	346A
74B	Insulation Installation, H-21B and H-21C	346D
75	Transmission Oil Pressure Transmitters and Warning Units	348
76	Fuel and Oil Pressure Transmitters	351
77	Electrical Equipment	353
78	Overhead Panel	359
78A	Overhead Panel, H-21B 53-4346 thru 53-4402, 54-4000 thru 54-4008, and 55-5127 thru 55-5131	363
78B	Overhead Panel, H-21C 55-4132 thru 55-4221	365
78C	Overhead Panel, H-21C 56-2015 thru 56-2160 and 56-4343 thru 56-4354	367
79	Windshield Wiper	369
80	Control Console, YH-21 and H-21A	370
81	Control Console, H-21B and H-21C	374
82	Instrument Panel	380
82A	Instrument Panel, H-21B 53-4346 thru 53-4402, 54-4000 thru 54-4008, and 55-5127 thru 55-5131	384
82B	Instrument Panel, H-21C 55-4132 thru 55-4221, 56-2015 thru 56-2160, and 56-4343 thru 56-4354	386
83	Pitot-Static Air Lines	388
84	Manifold Pressure Lines	391
85	Heating System	394
86	Radio and Interphone	400
86A	Automatic Pilot	410
87	Pilot's and Co-Pilot's Seats	416
88	Cargo Sling	422
89	Troop Seats and Litters	428
90	Rescue Hoist	432
91	Hydraulic Rescue Hoist System	435
92	Hydraulic Controls, YH-21 and H-21A	440
93	Hydraulic Controls, H-21B 51-15854 thru 51-15880, 52-8665 thru 52-8679, and H-21C	446
93A	Hydraulic Controls, H-21B 52-8681 thru 52-8709, 53-4322 thru 53-4402, 54-4000 thru 54-4008, and 55-5127 thru 55-5131	454
94	Hydraulic Brakes	462
	SYSTEMS	
95	Power Plant Oil System	466
96	Power Plant Fuel System	467
97	Power Plant Cooling System	468
98	Transmission Lubrication System	469
99	Flight Controls System	470
100	Engine Controls System	471
101	Pitot-Static System	472
102	Manifold Pressure System	473
103	Heating System	474
104	Hydraulic Hoist System	475
105	Hydraulic Control System, YH-21 and H-21A	476
105A	Hydraulic Control System, H-21B and H-21C	477
106	Hydraulic Brakes System	478
107	Fire Detection System	479
III	**NUMERICAL INDEX**	481
	Standard and Vendor Parts	482
	Contractor Parts	501

1-33. SOURCE CODE. This column denotes the source code assigned to the part. Source coding of parts results in immediate determination of the responsibility of (a) Procurement by the supply service of the item, (b) Manufacture of the item by the maintenance or overhaul activity, or (c) that the item should not be requisitioned.

1-34. QUANTITY PER ARTICLE. This column indicates the total quantity of each part per helicopter.

1-35. MICROFILM INDEX. This column lists the microfilm index numbers of contractor drawings. Information pertaining to microfilm numbers and microfilms can be obtained by contacting WCXDE, Wright-Patterson AFB, Dayton, Ohio.

1-36. SOURCE CODE DEFINITIONS.

1-37. Source coding as applied to the Numerical Index has been assigned by Department representatives. The following codes will be found in the source code column: P, P1, P2, M, M1, A, A1, X, X1, X2, *, V, and V1.

1-38. CODE "P". Parts procured because of high usage but which could be made if required.

1-39. CODE "P1". Applied to parts which are very difficult to manufacture. Service manufacture is considered impractical.

1-40. CODE "P2". Applied to "insurance" type spare parts requiring special tools, templates, and jigs which are difficult, impractical, or uneconomical to furnish. Code "P2" parts will only be procured in limited quantities for designated overhaul and/or back-up activities for the support of battle or crash damaged aircraft or articles.

1-41. CODE "M". Parts that can be made at organizational level. Is applied to relatively low usage parts within the facilities of an organizational or Dependent Type Activity to manufacture.

1-42. CODE "M1". Parts can be made only at Depot level. Not a high usage part.

1-43. CODE "A". Assembly of part by any level of maintenance assigned by Maintenance Code. Is applied to assemblies made up of two or more units each of which carry individual part numbers or nomenclature and which may be assembled by any maintenance activity.

1-44. CODE "A1". Assembly only by Depot. Is applied to assemblies made up of two or more units, each of which carries an individual part number and description and which may be assembled only by depot activities.

1-45. CODE "X". Strike aircraft. Is applied to main structural members which, if required, would suggest extensive aircraft reconditioning. The need of a part coded "X" should normally result in recommendation to strike aircraft.

1-46. CODE "X1". Procure the next higher assembly marked P1. Is applied to parts for which procurement of the next larger assembly coded "P1" is justified.

1-47. CODE "X2". Applied to parts which are neither procured nor stocked. Activities requiring such parts shall attempt to obtain them from salvage. If not obtainable from salvage, such parts shall be requisitioned through normal supply channels with supporting justification.

1-48. CODE "*". Drawings of an informational nature. Applies to installation drawings, diagrams, instruction drawings, basic drawing numbers and obsolete parts which cannot be procured or manufactured.

1-49. CODE "V" or "V1". Applied to vendor parts initially procured from the contractor. The vendor is the source for future procurement.

1-50. REQUISITIONING.

1-51. The Class Code and Part Number should be used for requisitioning parts. When the Stock Number of an item does not appear, reference should be made to USAF Master Cross-Reference Index, S-00-1. Army helicopter parts are presently being supplied through USAF depots.

1-52. MANUFACTURERS' CODE SYMBOLS.

1-53. All vendor part listings include the manufacturers' name or the code designated in Navy Catalog of Navy Material, Section 0003, Navy Code of Manufacturers' Names. Identification of the code symbols used in this Illustrated Parts Breakdown will be found in the following code list.

MANUFACTURERS' CODE SYMBOLS

Code	Name and Address
AA	Air Associates, Inc Los Angeles, Calif
ACA	American Chain and Cable Co Bridgeport, Conn
ACB	Aircraft Belt and Trim Corp Los Angeles, Calif
ACR	Air Cruisers, Inc Clifton, N J
ADE	Advance Electric and Relay Co Burbank, Calif
AEO	The Aerotec Corp Greenwich, Conn
AFJ	Aircraft Mechanics, Inc Colorado Springs, Colo
AHT	Aerial Machine and Tool Corp Long Island City, N Y
AIR	Airesearch Mfg Co Los Angeles, Calif
ALF	American LaFrance Foamite Elmira, N Y
ALV	Alco Valve Co St Louis, Mo
AM	American Bosch Corp Springfield, Mass
AMA	Air-Maze Corp Cleveland, Ohio
AMP	American Phenolic Corp Chicago, Ill
ANE	Anemostat Corp of America New York, N Y
AP	Adel Div, General Metals Corp Burbank, Calif
AQ	Aeroquip Corp Jackson, Mich
AR	The American Brass Co Waterbury, Conn
ARBN	Airborne Accessories Corp Hillside, N J
ARC	Aircraft Radio Corp Boonton, N J
ARN	Arens Controls, Inc Evanston, Ill
ARW	Arrowhead Rubber Co Downey, Calif
AS	Aero Supply Mfg Co, Inc Corry, Pa
ASE	American Seating Co Grand Rapids, Mich
ATI	Atlantic India Rubber Works, Inc Chicago, Ill
AVDE	Aviation Development, Inc Burbank, Calif
AVEN	Aviation Engineering Corp Ozone Park, N Y
AXD	Amplex Div, Chrysler Corp Detroit, Mich
AZF	R C Allen Co Boston, Mass
BAAP	Bewley Engineering Co Bridgeport, Conn
BC	Breeze Corporations, Inc Newark, N J
BCC	Barber-Colman Co Rockford, Ill
BEA	Beech Aircraft Corp Wichita, Kans
BGDA	Brown-Line Corp Beverly Hills, Calif
BGW	Boston Gear Works Div, Murray Co of Texas North Quincy, Mass
BIEL	Bird Electronic Corp Cleveland, Ohio
BLC	The Barry Corp Cambridge, Mass
BM	Benson Mfg Co Kansas City, Mo
BUS	Bussmann Mfg Co St Louis, Mo
BX	Bendix Aviation Corp N Hollywood, Calif
CAOP	Cleveland Aero Products, Inc Cleveland, Ohio
CCL	Corbin Cabinet Lock Div, American Hardware Corp New Britain, Conn
CED	Cannon Electric Co Los Angeles, Calif
CHRU	Chardon Rubber Co Chardon, Ohio
CLC	Camloc Fastener Co Paramus, N J
CLD	Cornell-Dubilier Electric Corp South Plainfield, N J
CLR	Clarostat Mfg Co, Inc Dorer, N H
COE	Cook Electric Co Chicago, Ill
CP	Cleveland Pneumatic Tool Co Cleveland, Ohio
CR	Collins Radio Co Cedar Rapids, Iowa
CUT	Cutler-Hammer, Inc Milwaukee, Wis
DAA	Dumont Aviation Associates Long Beach, Calif
DAE	Dynamic Air Engineering Co Los Angeles, Calif
DASI	Durham Aircraft Service, Inc Flushing, N Y
DE	Delco Products Div, General Motors Corp Dayton, Ohio
DEL	Detroit Controls Corp Detroit, Mich
DIEA	Die Supply Co Cleveland, Ohio
DIGR	Dimco-Gray Co Dayton, Ohio
DLPC	Driv-Loc Pin Co Chicago, Ill
DLR	Delron Co, Inc Los Angeles, Calif
DY	Dayton Mfg Co Dayton, Ohio
DZ	Dzus Fastener Co, Inc Babylon, N Y
ECP	Eclipse Pioneer Div, Bendix Aviation Corp Teterboro, N J
EDI	Thomas Edison Co West Orange, N J
EG	Elgin National Watch Co Elgin, Ill
ELE	Electrol, Inc Kingston, N Y
EN	Elastic Stop Nut Corp Union, N J
ESRC	Eastern Rotorcraft Corp Willow Grove, Pa
FAF	The Fafnir Bearing Co New Britain, Conn
FAKB	Flexonics Corp Maywood, Ill
FAV	Fletcher Aviation Corp Pasadena, Calif
FEN	Fenwall, Inc Ashland, Mass
GCO	General Controls Co Glendale, Calif
GE	General Electric Co Schenectady, N Y
GEMI	General Electric Co, Meter and Instrument Div West Lynn, Mass
GFAE	Government furnished aeronautical equipment
GMC	Grimes Mfg Co Urbana, Ohio
GN	Guardian Electric Mfg Co Chicago, Ill
GY	Goodyear Tire and Rubber Co, Inc Akron, Ohio
HAW	Harvey Hubbell, Inc Bridgeport, Conn
HD	Houde Engineering Div, Houdaille-Hershey Corp Buffalo, N Y
HEC	The Heim Co Fairfield, Conn
HG	Houghton and Co Philadelphia, Pa

MANUFACTURERS' CODE SYMBOLS (continued)

Code	Name and Address
HKM	Huck Mfg Co Detroit, Mich
HLF	Kahr Bearing Div, Aetna Steel Products Corp Bridgeport, Conn
HPL	Henry Paul Co New York, N Y
HPP	General Metals Corp, Adel Div Huntington, W Va
HR	Harrison Radiator Div, General Motors Corp Lockport, N Y
HTEC	Hardman Tool and Engineering Co Southgate, Calif
HWL	Hartwell Aviation Supply Co Los Angeles, Calif
IR	Irving Air Chute Co Buffalo, N Y
IRC	International Resistance Co Philadelphia, Pa
JH	Jack and Heintz Precision Industries, Inc Cleveland, Ohio
JOHJ	M J Johnson Aircraft Engineering Co Morris Plains, N J
JOI	Joy Mfg Co New Phila, Ohio
KKE	Kulka Electric Mfg Co, Inc Mt Vernon, N Y
KO	Kollsman Instrument Corp Elmhurst, N Y
KOE	Koehler Aircraft Products Co Dayton, Ohio
LAT	Thomas C Laughlin Co Portland, Maine
LECA	Lear Inc, Learcal Div Los Angeles, Calif
LEN	Lewis Engineering Co Naugatuk, Conn
LFK	Lion Fastener, Inc Honeoye Falls, N Y
LNR	Lackner Co, Inc Cincinnati, Ohio
LO	Lord Mfg Co Erie, Pa
LR	Leach Relay Co Los Angeles, Calif
LUN	Lundy Mfg Corp Long Island City, N Y
LYQ	Hansen-Lynn Co, Inc Burbank, Calif
MAL	P R Mallory and Co, Inc Indianapolis, Ind
MAR	Marmon Products Co Inglewood, Calif
MCS	Micro Switch Div, Minneapolis-Honeywell Regulator Co Freeport, Ill
MGLA	McGill Mfg Co, Inc Bearing Div Valparaiso, Ind
MH	Minneapolis-Honeywell Regulator Co Minneapolis, Minn
MHA	Minneapolis-Honeywell Regulator Co Aeronautical Div Minneapolis, Minn
MIM	Minnesota Mining and Mfg Co St Paul, Minn
MODE	Model Engineering and Mfg Co, Inc Huntington, Ind
MWC	Aerotherm Corp Greenwich, Conn
NAQ	North American Philips Co, Inc New York, N Y
NEUS	Neuschotz Engineering Co Los Angeles, Calif
NMI	Narmco, Inc San Diego, Calif
NOSC	National Organ Supply Co Erie, Pa
NTS	National Telephone Supply Co Cleveland, Ohio
OAK	Oak Mfg Co Chicago, Ill
OM	Ohmite Mfg Co Chicago, Ill
ORO	Oro Mfg Co Adrian, Mich
PA	Parker Appliance Co Cleveland, Ohio
PAET	Parker Aircraft Los Angeles, Calif
PAS	Pacific Scientific Co Los Angeles, Calif
PCR	Phillips Control Corp Chicago, Ill
PE	Pesco Products Div, Borg Warner Corp Bedford, Ohio
PHL	Vertol Aircraft Corp Morton, Pa
PLL	Joseph Pollak Corp Boston, Mass
PROX	Caplugs Div, Protective Closures Co, Inc Buffalo, N Y
RAI	Robinson Aviation, Inc Teterboro, N J
RAN	Ranco, Inc Columbus, Ohio
RAPT	Rider Hayes Co, Inc Bridgeport, Conn
RCA	Radio Corp of America New York, N Y
RF	Resisto Flex Corp Belleville, N J
RHS	Robert Hetherington and Sons, Inc Sharon Hill, Pa
RHW	Adams-Rite Mfg Co Glendale, Calif
RO	Lear-Romec Div, Lear Inc Elyria, Ohio
ROP	Rochester Products Div, General Motors Corp Rochester, N Y
ROSN	Rosan, Inc South Gate, Calif
RPS	Ray Operating and Maintenance Specialities Charlotte, N C
RSM	Roller-Smith Co, Div Realty and Industrial Corp Bethlehem, Pa
RYA	Ryan Aeronautical Corp San Diego, Calif
SAI	Standard-Thompson Corp Dayton, Ohio
SAIF	Stratoflex, Inc Fort Worth, Texas
SAIM	Stratford Pen Corp New York, N Y
SHA	Shafer Bearing Corp Chicago, Ill
SIE	Simplet Electric Co Chicago, Ill.
SKF	SKF Industries, Inc Philadelphia, Pa
SMID	Standard Electric Co Los Angeles, Calif
SNT	Scintilla Magneto Div, Bendix Aviation Corp Sidney, N Y
SPE	Sperry Gyroscope Co, Inc Great Neck, N Y
SPR	Sprague Electric Co North Adams, Mass
SPV	Snapvent Co Knoxville, Tenn
ST	Stromberg Products Div, Bendix Aviation Corp Detroit, Mich
STB	Meletron Corp Los Angeles, Calif
STFI	Stop-Fire, Inc. Brooklyn, N Y
SUC	Surface Combustion Corp Toledo, Ohio

MANUFACTURERS' CODE SYMBOLS (continued)

Code	Name and Address
SWPC	South West Products Co Pasadena, Calif
TEL	Telephonics Corp Huntington, N Y
THAS	Thomas Associates Burbank, Calif
THM	Thomas Flexible Coupling Co Warren, Pa
TI	Timken Roller Bearing Co Canton, Ohio
TIN	Tinnerman Products, Inc Cleveland, Ohio
TMH	H I Thompson Co Los Angeles, Calif
TOR	Torrington Co Torrington, Conn
TP	Thompson Products, Inc Cleveland, Ohio
UA	United Aircraft Products, Inc Dayton, Ohio
UC	United-Carr Fastener Corp Cambridge, Mass
UG	U S Gauge Div, American Machine and Metals, Inc Sellersville, Pa
USR	U S Rubber Co New York, N Y
USZ	U S Bronze Powder Works, Inc New York, N Y
VI	Vickers, Inc Detroit, Mich
WD	The S S White Dental Mfg Co New York, N Y
WHG	Whittet-Higgins Co Providence, R I
WIG	E B Wiggins Oil Tool Co Los Angeles, Calif
WK	Walter Kidde and Co, Inc Belleville, N J
WKI	Waldes Kohinoor, Inc Long Island City, N Y
WKL	Wickland Mfg Co Pasadena, Calif
WR	White-Rodgers Electric Co St Louis, Mo
WS	Weston Electric Instrument Co New York, N Y
WTR	Wm R Whittaker Co, Ltd Los Angeles, Calif
WW	Waltham Watch Co Waltham, Mass

HOW TO USE THE ILLUSTRATED PARTS BREAKDOWN

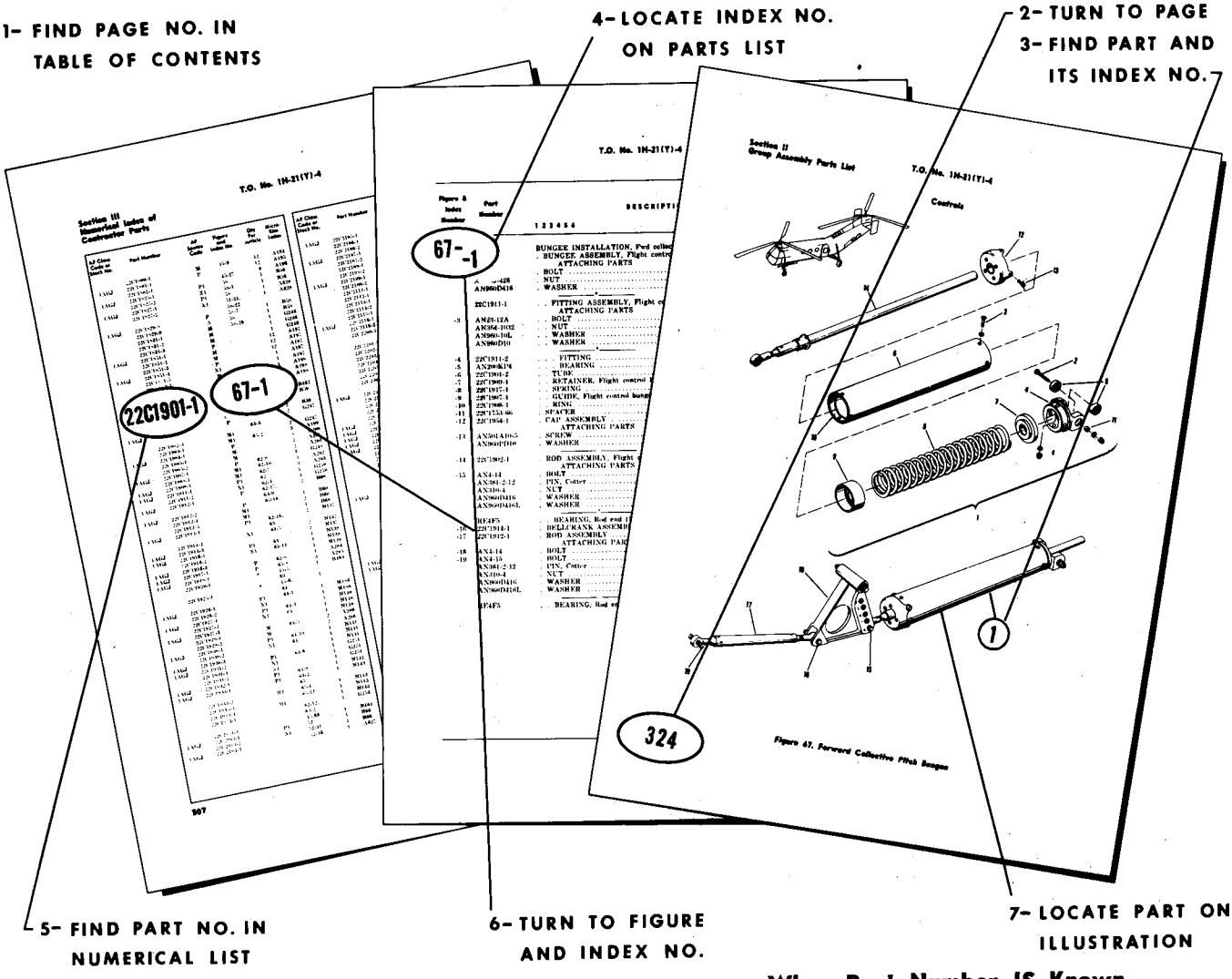

When Part Number is *NOT* Known

1. Determine what major assembly, system, or section of the helicopter the part is used in, and turn to the Table of Contents to find the figure number and page number where that assembly, system, or section is illustrated.

2. Turn to the page containing that illustration.

3. Find the part and its index number on the illustration.

4. Refer to the Parts List (adjacent to the illustration), and locate the index number in the list. Opposite the number will be a complete description of the part.

When Part Number *IS* Known

5. Turn to the Numerical Index, Section III, and find the part number. The figure and index number will appear on the same line.

6. Turn to the Group Assembly Parts List, Section II, for that figure and index number. Opposite the index number will be a complete description of the part.

7. If visual identification of the part is desired, find the index number on the accompanying illustration. (If this illustration shows the part location to be other than the one desired, turn back to the Numerical Index and determine if the part is used in another location.)

USAF helicopters are identified by the following model and serial numbers:

YH-21	50-1231 thru 50-1248
H-21A	51-15238 thru 51-15269
H-21B	51-15854 thru 51-15880, 52-8665 thru 52-8679, 52-8681 thru 52-8709, 53-4322 thru 53-4402, 54-4000 thru 54-4008, 55-5127 thru 55-5131

US Army helicopters are identified by the following model and serial numbers:

H-21C	51-15881 thru 51-15913, 52-8613 thru 52-8664, 52-8680, 55-4132 thru 55-4221, 56-2015 thru 56-2160, 56-4343 thru 56-4354

USABLE ON CODES

Code	YH-21 Serial No.	H-21A Serial No.	H-21B Serial No.	H-21C Serial No.
A	All	. . . . .	. . . . .	. . . . .
B	. . . . .	All	All	All
C	. . . . .	. . . . .	. . . . .	All
D	. . . . .	. . . . .	All	. . . . .
E	. . . . .	All	. . . . .	. . . . .
F	50-1235 thru 50-1248	. . . . .	. . . . .	. . . . .
G	All	51-15238 thru 51-15247	. . . . .	. . . . .
H	50-1235 thru 50-1248	51-15238 thru 51-15247	. . . . .	. . . . .
I	. . . . .	. . . . .	52-8665 thru 52-8679, 52-8681 thru 52-8709, 53-4322 thru 53-4402, 54-4000 thru 54-4008, 55-5127 thru 55-5131	52-8613 thru 52-8664, 52-8680, 55-4132 thru 55-4221, 56-2015 thru 56-2160, 56-4343 thru 56-4354
J	All	All	. . . . .	. . . . .
K	50-1234 thru 50-1236	. . . . .	. . . . .	. . . . .
L	. . . . .	51-15247 thru 51-15269	. . . . .	. . . . .
M	50-1237 thru 50-1248	. . . . .	. . . . .	. . . . .
N	All	51-15238 thru 51-15255	. . . . .	. . . . .
P	. . . . .	51-15238 thru 51-15246	. . . . .	. . . . .
Q	50-1231 thru 50-1240	. . . . .	. . . . .	. . . . .
R	50-1241 thru 50-1248	. . . . .	. . . . .	. . . . .
S	50-1231 thru 50-1239	. . . . .	. . . . .	. . . . .
T	50-1240 thru 50-1248	. . . . .	. . . . .	. . . . .
U	50-1231 thru 50-1244	. . . . .	. . . . .	. . . . .
V	50-1245 thru 50-1248	All	All	All
W	. . . . .	51-15238 thru 51-15247	. . . . .	. . . . .
X	. . . . .	51-15248 thru 51-15269	. . . . .	. . . . .
Y	All	51-15238 thru 51-15257	. . . . .	. . . . .
Z	. . . . .	51-15258 thru 51-15269	. . . . .	. . . . .
AA ...	50-1231 thru 50-1246	. . . . .	. . . . .	. . . . .
AB ...	50-1247, 50-1248	All	. . . . .	. . . . .
AC ...	50-1231 thru 50-1237	. . . . .	. . . . .	. . . . .
AD ...	All	51-15238 thru 51-15249	. . . . .	. . . . .
AE ...	50-1231 thru 50-1234	. . . . .	. . . . .	. . . . .
AF ...	50-1235 thru 50-1239	. . . . .	. . . . .	. . . . .
AG ...	. . . . .	51-15250 thru 51-15269	All	All 51-15885 thru 51-15896
AH ...	. . . . .	. . . . .	. . . . .	. . . . .
AI ...	. . . . .	. . . . .	52-8665 thru 52-8679, 52-8681 thru 52-8709	
AJ ...	. . . . .	. . . . .	. . . . .	51-15883 thru 51-15913, 52-8613 thru 52-8664, 52-8680, 55-4132 thru 55-4221, 56-2015 thru 56-2160, 56-4343 thru 56-4354
AK ...	. . . . .	. . . . .	. . . . .	51-15881 thru 51-15913
AL ...	. . . . .	. . . . .	. . . . .	51-15881 thru 51-15896

USABLE ON CODES (continued)

Code	YH-21 Serial No.	H-21A Serial No.	H-21B Serial No.	H-21C Serial No.
AM ..	. . . . .	. . . . .	. . . . .	52-8613 thru 52-8664, 52-8680, 55-4132 thru 55-4221, 56-2015 thru 56-2160, 56-4343 thru 56-4354
AN ...	. . . . .	. . . . .	. . . . .	51-15897 thru 51-15913, 52-8613 thru 52-8664, 52-8680, 55-4132 thru 55-4221, 56-2015 thru 56-2160, 56-4343 thru 56-4354
AO ...	. . . . .	. . . . .	52-8665 thru 52-8670	. . . . .
AP ...	. . . . .	. . . . .	. . . . .	51-15881 thru 51-15884
AQ ...	. . . . .	. . . . .	. . . . .	51-15885 thru 51-15913, 52-8613 thru 52-8664, 52-8680, 55-4132 thru 55-4221, 56-2015 thru 56-2160, 56-4343 thru 56-4354
AR ...	All	All	51-15854 thru 51-15880, 52-8665 thru 52-8679, 52-8681 thru 52-8709, 53-4322 thru 53-4361	. . . . .
AS ...	. . . . .	51-15238 thru 51-15252	. . . . .	. . . . .
AT ...	50-1240 thru 50-1248	51-15238 thru 51-15247	. . . . .	. . . . .
AU ...	. . . . .	. . . . .	All	All
AV ...	. . . . .	. . . . .	51-15854 thru 51-15880	51-15881 thru 51-15913
AW ..	. . . . .	. . . . .	52-8665 thru 52-8679, 52-8681 thru 52-8709, 53-4322 thru 53-4402, 54-4000 thru 54-4008, 55-5127 thru 55-5131	. . . . .
AX ...	. . . . .	51-15238 thru 51-15244	. . . . .	. . . . .
AY ...	. . . . .	51-15245 thru 51-15269	. . . . .	. . . . .
AZ ...	. . . . .	51-15238 thru 51-15263	. . . . .	. . . . .
BA ...	. . . . .	51-15264 thru 51-15269	. . . . .	. . . . .
BB ...	. . . . .	51-15238 thru 51-15241	. . . . .	. . . . .
BC ...	. . . . .	51-15242 thru 51-15269	. . . . .	. . . . .
BD ...	. . . . .	51-15238 thru 51-15242	. . . . .	. . . . .
BE ...	. . . . .	51-15243 thru 51-15269	. . . . .	. . . . .
BF ...	. . . . .	51-15238 thru 51-15243	. . . . .	. . . . .
BG ...	. . . . .	51-15244 thru 51-15269	. . . . .	. . . . .
BH ...	. . . . .	51-15253 thru 51-15269	. . . . .	. . . . .
BI ...	. . . . .	. . . . .	. . . . .	51-15897 thru 51-15913, 52-8613 thru 52-8621
BJ ...	. . . . .	. . . . .	53-4322 thru 53-4402, 54-4000 thru 54-4006	55-4132 thru 55-4138
BK ...	. . . . .	. . . . .	51-15854 thru 51-15880, 52-8665 thru 52-8670	
BL ...	. . . . .	. . . . .	54-4007, 54-4008	55-4139 thru 55-4221, 56-2015 thru 56-2160, 56-4343 thru 56-4354
BM ...	. . . . .	51-15248 thru 51-15258	. . . . .	. . . . .
BN ...	. . . . .	51-15259 thru 51-15269	. . . . .	. . . . .
BO ...	. . . . .	. . . . .	. . . . .	51-15881 thru 51-15913, 52-8613 thru 52-8621
BP ...	. . . . .	51-15238 thru 51-15259	. . . . .	. . . . .
BQ ...	. . . . .	51-15260 thru 51-15269	. . . . .	. . . . .
BR ...	. . . . .	51-15238 thru 51-15253	. . . . .	. . . . .
BS ...	50-1231 thru 50-1245	. . . . .	. . . . .	. . . . .
BT ...	50-1246 thru 50-1248	. . . . .	. . . . .	. . . . .
BU ...	. . . . .	. . . . .	. . . . .	51-15885 thru 51-15913
BV ...	. . . . .	. . . . .	All	51-15885 thru 51-15913, 52-8613 thru 52-8664, 52-8680, 55-4132 thru 55-4221, 56-2015 thru 56-2160, 56-4343 thru 56-4354

USABLE ON CODES (continued)

Code	YH-21 Serial No.	H-21A Serial No.	H-21B Serial No.	H-21C Serial No.
BW ...				51-15881 thru 51-15885
BX ...				51-15886 thru 51-15913, 52-8613 thru 52-8664, 52-8680, 55-4132 thru 55-4221, 56-2015 thru 56-2160, 56-4343 thru 56-4354
BY ...			53-4322 thru 53-4402	
BZ ...				51-15881 thru 51-15892
CA ...				51-15893 thru 51-15913
CB ...			51-15854 thru 51-15880	
CC ...				52-8613 thru 52-8621
CD ...				51-15893 thru 51-15913, 52-8613 thru 52-8664, 52-8680, 55-4132 thru 55-4221, 56-2015 thru 56-2160, 56-4343 thru 56-4354
CE ...				51-15893 thru 51-15913, 52-8613 thru 52-8621
CF ...		51-15254 thru 51-15269		
CG ...				51-15881 thru 51-15888
CH ...				51-15889 thru 51-15913, 52-8613 thru 52-8664, 52-8680, 55-4132 thru 55-4221, 56-2015 thru 56-2160, 56-4343 thru 56-4354
CI		51-15248 thru 51-15259		
CJ ...				51-15884
CK ...				51-15881 thru 51-15905
CL ...				51-15906 thru 51-15913, 52-8613 thru 52-8664, 52-8680, 55-4132 thru 55-4221, 56-2015 thru 56-2160, 56-4343 thru 56-4354
CM ...	50-1231 thru 50-1248	51-15238 thru 51-15266		
CN ...		51-15267 thru 51-15269		
CO ...				51-15881 thru 51-15884, 51-15887, 51-15888, 51-15897 thru 51-15900
CP ...			All	51-15885, 51-15886, 51-15889 thru 51-15896, 51-15901 thru 51-15913, 52-8613 thru 52-8664, 52-8680, 55-4132 thru 55-4221, 56-2015 thru 56-2160, 56-4343 thru 56-4354
CQ ...	All	51-15238 thru 51-15266, 51-15268, 51-15269	51-15855 thru 51-15880, 52-8665 thru 52-8679, 52-8681 thru 52-8709, 53-4322 thru 53-4402, 54-4000 thru 54-4008, 55-5127 thru 55-5131	51-15881 thru 51-15886
CR ...		51-15267	51-15854	51-15887 thru 51-15913, 52-8613 thru 52-8664, 52-8680, 55-4132 thru 55-4221, 56-2015 thru 56-2160, 56-4343 thru 56-4354
CS ...			51-15854 thru 51-15880	51-15881 thru 51-15913,
CT ...			52-8665 thru 52-8679, 52-8681 thru 52-8697 52-8698 thru 52-8709, 53-4322 thru 53-4402, 54-4000 thru 54-4008, 55-5127 thru 55-5131	52-8613 thru 52-8648, 52-8680 52-8649 thru 52-8664, 55-4132 thru 55-4221, 56-2015 thru 56-2160, 56-4343 thru 56-4354

USABLE ON CODES (continued)

Code	YH-21 Serial No.	H-21A Serial No.	H-21B Serial No.	H-21C Serial No.
CU ...	. . . . .	. . . . .	51-15854 thru 51-15863	. . . . .
CV ...	. . . . .	. . . . .	51-15864 thru 51-15880, 52-8665 thru 52-8679, 52-8681 thru 52-8709, 53-4322 thru 53-4402, 54-4000 thru 54-4008, 55-5127 thru 55-5131	. . . . .
CW ...	. . . . .	. . . . .	51-15854 thru 51-15880, 52-8665 thru 52-8679, 52-8681 thru 52-8709	. . . . .
CX ...	. . . . .	. . . . .	. . . . .	51-15881 thru 51-15890
CY ...	. . . . .	. . . . .	51-15854 thru 51-15857	51-15891 thru 51-15913
CZ ...	. . . . .	. . . . .	51-15858 thru 51-15880	. . . . .
DA ...	. . . . .	. . . . .	All	51-15891 thru 51-15913
DB ...	. . . . .	. . . . .	51-15854 thru 51-15880, 52-8665 thru 52-8677	51-15881 thru 51-15913, 52-8613 thru 52-8638
DC ...	. . . . .	. . . . .	52-8678 thru 52-8679, 52-8681 thru 52-8709, 53-4322 thru 53-4402, 54-4000 thru 54-4008, 55-5127 thru 55-5131	52-8639 thru 52-8664, 52-8680, 55-4132 thru 55-4221, 56-2015 thru 56-2160, 56-4343 thru 56-4354
DD ...	. . . . .	. . . . .	. . . . .	52-8649 thru 52-8664, 55-4132 thru 55-4221, 56-2015 thru 56-2160, 56-4343 thru 56-4354
DE ...	. . . . .	. . . . .	51-15854 thru 51-15880, 52-8665 thru 52-8679, 52-8681 thru 52-8692	51-15881 thru 51-15913, 52-8613 thru 52-8653, 52-8680
DF ...	. . . . .	. . . . .	52-8693 thru 52-8709, 53-4322 thru 53-4402, 54-4000 thru 54-4008, 55-5127 thru 55-5131	52-8654 thru 52-8664, 55-4132 thru 55-4221, 56-2015 thru 56-2160, 56-4343 thru 56-4354
DG ...	. . . . .	All	51-15854 thru 51-15880, 52-8665 thru 52-8679, 52-8681 thru 52-8709	All
DH ...	. . . . .	. . . . .	52-8665 thru 52-8675	52-8613 thru 52-8636
DI ...	. . . . .	. . . . .	52-8676 thru 52-8679, 52-8681 thru 52-8709, 53-4322 thru 53-4402, 54-4000 thru 54-4008, 55-5127 thru 55-5131	52-8637 thru 52-8664, 52-8680, 55-4132 thru 55-4221, 56-2015 thru 56-2160, 56-4343 thru 56-4354
DJ ...	. . . . .	. . . . .	51-15854 thru 51-15880, 52-8665 thru 52-8666	51-15881 thru 51-15913, 52-8613 thru 52-8615
DK ...	. . . . .	. . . . .	52-8667 thru 52-8679, 52-8681 thru 52-8709, 53-4322 thru 53-4402, 54-4000 thru 54-4008, 55-5127 thru 55-5131	52-8616 thru 52-8664, 52-8680, 55-4132 thru 55-4221, 56-2015 thru 56-2160, 56-4343 thru 56-4354
DL ...	. . . . .	. . . . .	51-15854 thru 51-15880, 52-8665 thru 52-8667	51-15881 thru 51-15913, 52-8613 thru 52-8624
DM ...	. . . . .	. . . . .	52-8668 thru 52-8679, 52-8681 thru 52-8709, 53-4322 thru 53-4402, 54-4000 thru 54-4008, 55-5127 thru 55-5131	52-8625 thru 52-8664, 52-8680, 55-4132 thru 55-4221, 56-2015 thru 56-2160, 56-4343 thru 56-4354
DN ...	. . . . .	. . . . .	51-15854 thru 51-15880, 52-8665 thru 52-8678	51-15881 thru 51-15913, 52-8613 thru 52-8639
DO ...	. . . . .	. . . . .	52-8679, 52-8681 thru 52-8709, 53-4322 thru 53-4402, 54-4000 thru 54-4008, 55-5127 thru 55-5131	52-8640 thru 52-8664, 52-8680, 55-4132 thru 55-4221, 56-2015 thru 56-2160, 56-4343 thru 56-4354
DP ...	. . . . .	. . . . .	51-15854 thru 51-15880, 52-8665 thru 52-8679, 52-8681 thru 52-8695	51-15881 thru 51-15913, 52-8613 thru 52-8650, 52-8680
DQ ...	. . . . .	. . . . .	52-8696 thru 52-8709, 53-4322 thru 52-4402, 54-4000 thru 54-4008, 55-5127 thru 55-5131	52-8651 thru 52-8664, 55-4132 thru 55-4221, 56-2015 thru 56-2160, 56-4343 thru 56-4354

USABLE ON CODES (continued)

Code	YH-21 Serial No.	H-21A Serial No.	H-21B Serial No.	H-21C Serial No.
DR ...	. . . . .	. . . . .	52-8665 thru 52-8679, 52-8681 thru 52-8709, 53-4322 thru 53-4351	. . . . .
DS ...	. . . . .	. . . . .	53-4352 thru 53-4402, 54-4000 thru 54-4008, 55-5127 thru 55-5131	. . . . .
DT ...	. . . . .	. . . . .	51-15854 thru 51-15880, 52-8665 thru 52-8679, 52-8681 thru 52-8709, 53-4322 thru 53-4351	. . . . .
DU ...	. . . . .	. . . . .	54-4000 thru 54-4008, 55-5127 thru 55-5131	55-4132 thru 55-4221, 56-2015 thru 56-2160, 56-4343 thru 56-4354
DV ...	. . . . .	. . . . .	. . . . .	51-15881 thru 51-15913, 52-8613 thru 52-8664, 52-8680
DW ..	. . . . .	. . . . .	51-15854 thru 51-15880, 52-8665 thru 52-8670	51-15881 thru 51-15913, 52-8613 thru 52-8621
DX ...	. . . . .	. . . . .	52-8671 thru 52-8679, 52-8681 thru 52-8709	52-8622 thru 52-8660, 52-8680
DY ...	. . . . .	. . . . .	51-15854 thru 51-15880, 52-8665 thru 52-8679, 52-8681 thru 52-8709, 53-4322 thru 53-4351	51-15881 thru 51-15913, 52-8613 thru 52-8664, 52-8680
DZ ...	. . . . .	. . . . .	53-4352 thru 53-4402	. . . . .
EA ...	. . . . .	. . . . .	51-15854 thru 51-15880, 52-8665 thru 52-8679	. . . . .
EB ...	. . . . .	. . . . .	52-8681 thru 52-8709, 53-4322 thru 53-4402, 54-4000 thru 54-4008, 55-5127 thru 55-5131	. . . . .
EC ...	. . . . .	. . . . .	51-15854 thru 51-15880, 52-8665 thru 52-8679, 52-8681 thru 52-8683	51-15881 thru 51-15913, 52-8613 thru 52-8634
ED ...	. . . . .	. . . . .	51-15854 thru 51-15880, 52-8665 thru 52-8679, 52-8681 thru 52-8709, 53-4322 thru 53-4402	51-15881 thru 51-15913, 52-8613 thru 52-8664, 52-8680
EE ...	. . . . .	. . . . .	51-15864 thru 51-15880, 52-8665 thru 52-8679	52-8613 thru 52-8664, 52-8680
EF ...	. . . . .	. . . . .	52-8681 thru 52-8709, 53-4322 thru 53-4402	. . . . .
EG ...	. . . . .	. . . . .	54-4000 thru 54-4008	. . . . .
EH ...	. . . . .	. . . . .	. . . . .	55-4132 thru 55-4221, 56-2015 thru 56-2160, 56-4343 thru 56-4354
EI ...	. . . . .	. . . . .	53-4322 thru 53-4402, 54-4000 thru 54-4008, 55-5127 thru 55-5131	. . . . .
EJ ...	. . . . .	. . . . .	52-8665 thru 52-8679, 52-8681 thru 52-8687	52-8613 thru 52-8644, 52-8680
EK ...	. . . . .	. . . . .	52-8688 thru 52-8709, 53-4322 thru 53-4341	52-8645 thru 52-8664
EL ...	. . . . .	. . . . .	53-4342 thru 53-4402, 54-4000 thru 54-4008, 55-5127 thru 55-5131	55-4132 thru 55-4221, 56-2015 thru 56-2160, 56-4343 thru 56-4354
EM ...	. . . . .	. . . . .	51-15854 thru 51-15880, 52-8665 thru 52-8679, 52-8681 thru 52-8709	51-15881 thru 51-15913, 52-8613 thru 52-8664, 52-8680
EN ...	. . . . .	. . . . .	51-15854 thru 51-15880, 52-8665 thru 52-8667	52-8613 thru 52-8618
EO ...	. . . . .	. . . . .	52-8668 thru 52-8679, 52-8681 thru 52-8709, 53-4322 thru 53-4402, 54-4000 thru 54-4008, 55-5127 thru 55-5131	52-8619 thru 52-8664, 52-8680, 55-4132 thru 55-4221, 56-2015 thru 56-2160, 56-4343 thru 56-4354
EP ...	. . . . .	. . . . .	51-15854 thru 51-15880, 52-8665 thru 52-8679, 52-8681 thru 52-8709, 53-4322 thru 53-4381	51-15881 thru 51-15913, 52-8613 thru 52-8664, 52-8680

USABLE ON CODES (continued)

Code	YH-21 Serial No.	H-21A Serial No.	H-21B Serial No.	H-21C Serial No.
EQ ...	. . . . .	. . . . .	53-4382 thru 53-4402, 54-4000 thru 54-4008, 55-5127 thru 55-5131	55-4132 thru 55-4221, 56-2015 thru 56-2160, 56-4343 thru 56-4354
ER ...	. . . . .	. . . . .	51-15854 thru 51-15880, 52-8665 thru 52-8671	51-15881 thru 51-15913, 52-8613 thru 52-8631
ES ...	. . . . .	. . . . .	52-8672 thru 52-8679, 52-8681 thru 52-8709, 53-4322 thru 53-4351	52-8632 thru 52-8664, 52-8680
ET ...	. . . . .	51-15238 thru 51-15242	. . . . .	51-15881 thru 51-15888
EU ...	. . . . .	. . . . .	51-15854 thru 51-15870, 52-8665 thru 52-8667	51-15881 thru 51-15913, 52-8613 thru 52-8617
EV ...	. . . . .	. . . . .	51-15871 thru 51-15880, 52-8668 thru 52-8679, 52-8681 thru 52-8709, 53-4322 thru 53-4402, 54-4000 thru 54-4008, 55-5127 thru 55-5131	52-8618 thru 52-8664, 52-8680, 55-4132 thru 55-4221, 56-2015 thru 56-2160, 56-4343 thru 56-4354
EW ...	. . . . .	. . . . .	. . . . .	56-2048 thru 56-2160, 56-4343 thru 56-4354
EX ...	. . . . .	. . . . .	52-8693 thru 52-8709, 53-4322 thru 53-4402, 54-4000 thru 54-4008, 55-5127 thru 55-5131	. . . . .
EY ...	. . . . .	. . . . .	. . . . .	51-15891 thru 51-15913, 52-8613 thru 52-8664, 52-8680, 55-4132 thru 55-4221, 56-2015 thru 56-2160, 56-4343 thru 56-4354
EZ ...	. . . . .	. . . . .	51-15854 thru 51-15880, 52-8665 thru 52-8679, 52-8681 thru 52-8684	51-15881 thru 51-15913, 52-8613 thru 52-8641, 52-8680
FA ...	. . . . .	. . . . .	52-8685 thru 52-8709, 53-4322 thru 53-4402, 54-4000 thru 54-4008, 55-5127 thru 55-5131	52-8642 thru 52-8664, 55-4132 thru 55-4221, 56-2015 thru 56-2160, 56-4343 thru 56-4354
FB ...	. . . . .	. . . . .	51-15854 thru 51-15880, 52-8665 thru 52-8679, 52-8681 thru 52-8709, 53-4322 thru 53-4402, 54-4000 thru 54-4008, 55-5127 thru 55-5131	51-15881 thru 51-15913, 52-8613 thru 52-8664, 52-8680, 55-4132 thru 55-4152
FC ...	. . . . .	. . . . .	. . . . .	55-4153 thru 55-4221, 56-2015 thru 56-2160, 56-4343 thru 56-4354
FD ...	. . . . .	. . . . .	51-15854 thru 51-15880, 52-8665 thru 52-8679, 52-8681 thru 52-8709, 53-4322 thru 53-4331	. . . . .
FE ...	. . . . .	. . . . .	53-4332 thru 53-4402, 54-4000 thru 54-4008, 55-5127 thru 55-5131	. . . . .
FF ...	. . . . .	. . . . .	. . . . .	55-4159 thru 55-4221, 56-2015 thru 56-2160, 56-4343 thru 56-4354
FG ...	. . . . .	. . . . .	51-15854 thru 51-15880, 52-8665 thru 52-8679, 52-8681 thru 52-8687	51-15881 thru 51-15913, 52-8613 thru 52-8644, 52-8680
FH ...	. . . . .	. . . . .	52-8688 thru 52-8709, 53-4322 thru 53-4402, 54-4000 thru 54-4008, 55-5127 thru 55-5131	52-8645 thru 52-8664, 55-4132 thru 55-4221, 56-2015 thru 56-2160, 56-4343 thru 56-4354
FI ...	. . . . .	. . . . .	52-8671 thru 52-8679, 52-8681 thru 52-8709, 53-4322 thru 53-4351	. . . . .

USABLE ON CODES (continued)

Code	YH-21 Serial No.	H-21A Serial No.	H-21B Serial No.	H-21C Serial No.
FJ ...	. . . . .	. . . . .	51-15854 thru 51-15880, 52-8665 thru 52-8679, 52-8681 thru 52-8709, 53-4322 thru 53-4402, 54-4000 thru 54-4008, 55-5127 thru 55-5131	51-15881 thru 51-15913, 52-8613 thru 52-8664, 52-8680
FK ...	. . . . .	. . . . .	. . . . .	52-8622 thru 52-8664, 52-8680
FL ...	. . . . .	. . . . .	52-8671 thru 52-8679, 52-8681 thru 52-8709, 53-4322 thru 53-4345	. . . . .
FM ...	. . . . .	. . . . .	. . . . .	51-15897 thru 51-15913, 52-8613 thru 52-8664, 52-8680
FN ...	50-1240 thru 50-1248	51-15238 thru 51-15269	. . . . .	. . . . .
FO ...	. . . . .	. . . . .	53-4362 thru 53-4402, 54-4000 thru 54-4008, 55-5127 thru 55-5131	
FP ...	. . . . .	. . . . .	51-15854 thru 51-15880, 52-8665 thru 52-8679, 52-8681 thru 52-8709, 53-4322 thru 53-4345	. . . . .
FQ ...	. . . . .	. . . . .	53-4346 thru 53-4402, 54-4000 thru 54-4008, 55-5127 thru 55-5131	. . . . .
FR ...	. . . . .	. . . . .	51-15854 thru 51-15880, 52-8665 thru 52-8679, 52-8681	51-15881 thru 51-15913, 52-8613 thru 52-8642, 52-8680
FS ...	. . . . .	. . . . .	52-8682 thru 52-8709, 53-4322 thru 53-4402, 54-4000 thru 54-4008, 55-5127 thru 55-5131	52-8643 thru 52-8664, 55-4132 thru 55-4221, 56-2015 thru 56-2160, 56-4343 thru 56-4354
FT ...	. . . . .	. . . . .	52-8681 thru 52-8709	. . . . .
FU ...	. . . . .	. . . . .	52-8681 thru 52-8697	. . . . .
FV ...	. . . . .	. . . . .	52-8698 thru 52-8709, 53-4322 thru 53-4402, 54-4000 thru 54-4008, 55-5127 thru 55-5131	. . . . .
FW ...	. . . . .	. . . . .	. . . . .	51-15881 thru 51-15913, 52-8613 thru 52-8648, 52-8680
FX ...	. . . . .	. . . . .	52-8672 thru 52-8679, 52-8681 thru 52-8709, 53-4322 thru 53-4381	52-8632 thru 52-8664, 52-8680
FY ...	. . . . .	. . . . .	51-15854 thru 51-15880, 52-8665 thru 52-8672	51-15885, 51-15886, 51-15889 thru 51-15896, 51-15901 thru 51-15913, 52-8613 thru 52-8633
■ FZ ...	. . . . .	. . . . .	52-8673 thru 52-8679, 52-8681 thru 52-8709, 53-4322 thru 53-4402, 54-4000 thru 54-4008, 55-5127 thru 55-5131	52-8634 thru 52-8664, 52-8680, 55-4132 thru 55-4221
GA ...	ALL	ALL	51-15854 thru 51-15880, 52-8665 thru 52-8672	51-15881 thru 51-15913, 52-8613 thru 52-8633
GB ...	. . . . .	51-15267 thru 51-15269	51-15854 thru 51-15880, 52-8665 thru 52-8679, 52-8681 thru 52-8709, 53-4322 thru 53-4402, 54-4000 thru 54-4008, 55-5127 thru 55-5131	51-15885, 51-15886, 51-15889 thru 51-15896, 51-15901 thru 51-15913, 52-8613 thru 52-8664, 52-8680, 55-4132 thru 55-4221, 56-2015 thru 56-2160, 56-4343 thru 56-4354
GC ...	ALL	51-15238 thru 51-15266, 51-15268 and 51-15269	51-15855 thru 51-15880, 52-8665 thru 52-8672	51-15881 thru 51-15886
GD ...	. . . . .	. . . . .	51-15854	51-15887 thru 51-15913, 52-8613 thru 52-8633

USABLE ON CODES (continued)

Code	YH-21 Serial No.	H-21A Serial No.	H-21B Serial No.	H-21C Serial No.
GE ...	. . . . .	. . . . .	51-15854 thru 51-15880, 52-8665 thru 52-8672	51-15881 thru 51-15913, 52-8613 thru 52-8664, 52-8680, 55-4132 thru 55-4221, 56-2015 thru 56-2160, 56-4343 thru 56-4354
GF ...	. . . . .	. . . . .	. . . . .	51-15881 thru 51-15913, 52-8613 thru 52-8664, 52-8680, 55-4132 thru 55-4158
GG ...	. . . . .	. . . . .	. . . . .	52-8613 thru 52-8664, 52-8680
GH ...	. . . . .	. . . . .	. . . . .	51-15897 thru 51-15913, 52-8613 thru 52-8664, 52-8680, 55-4132 thru 55-4158
GI ...	. . . . .	. . . . .	52-8665 thru 52-8679, 52-8681 thru 52-8691	52-8613 thru 52-8652, 52-8680
GJ ...	. . . . .	. . . . .	52-8692 thru 52-8709, 53-4322 thru 53-4402, 54-4000 thru 54-4008, 55-5127 thru 55-5131	52-8653 thru 52-8664, 55-4132 thru 55-4221, 56-2015 thru 56-2160, 56-4343 thru 56-4354
GK ...	. . . . .	. . . . .	. . . . .	51-15892 thru 51-15913
GL ...	. . . . .	. . . . .	52-8665 thru 52-8679, 52-8681 thru 52-8709, 53-4322 thru 53-4402, 54-4000 thru 54-4008, 55-5127 thru 55-5131	51-15881 thru 51-15891, 52-8613 thru 52-8664, 52-8680, 55-4132 thru 55-4221, 56-2015 thru 56-2160, 56-4343 thru 56-4354
GM ...	. . . . .	. . . . .	51-15854 thru 51-15880, 52-8665 thru 52-8679, 52-8681 thru 52-8691	51-15881 thru 51-15913, 52-8613 thru 52-8652, 52-8680
GN ...	. . . . .	. . . . .	51-15864 thru 51-15880, 52-8665 thru 52-8679	52-8613 thru 52-8664, 52-8680, 55-4132 thru 55-4221, 56-2015 thru 56-2160, 56-4343 thru 56-4354
GO ...	. . . . .	. . . . .	52-8665 thru 52-8673	52-8613 thru 52-8623
GP ...	. . . . .	. . . . .	52-8674 thru 52-8679, 52-8681 thru 52-8709	52-8624 thru 52-8664, 52-8680
GQ ...	. . . . .	51-15258 thru 51-15269	51-15854 thru 51-15880	51-15885 thru 51-15913
GR ...	. . . . .	. . . . .	51-15854 thru 51-15880, 52-8665 thru 52-8678	51-15881 thru 51-15913, 52-8613 thru 52-8637
GS ...	. . . . .	. . . . .	52-8679, 52-8681 thru 52-8709, 53-4322 thru 53-4402, 54-4000 thru 54-4008, 55-5127 thru 55-5131	52-8638 thru 52-8664, 52-8680, 55-4132 thru 55-4221, 56-2015 thru 56-2160, 56-4343 thru 56-4354
GT ...	. . . . .	. . . . .	. . . . .	51-15881 thru 51-15886
GU ...	. . . . .	. . . . .	All	51-15887 thru 51-15913, 52-8613 thru 52-8664, 52-8680, 55-4132 thru 55-4221, 56-2015 thru 56-2160, 56-4343 thru 56-4354
GV ...	. . . . .	. . . . .	51-15854 thru 51-15880, 52-8665 thru 52-8672	51-15887 thru 51-15913, 52-8613 thru 52-8633
GW ...	. . . . .	51-15261 thru 51-15269	. . . . .	. . . . .
GX ...	. . . . .	. . . . .	52-8665 thru 52-8679, 52-8681, 52-8682	52-8613 thru 52-8640
GY ...	. . . . .	. . . . .	52-8683 thru 52-8709, 53-4322 thru 53-4402	52-8641 thru 52-8664, 52-8680
GZ ...	. . . . .	. . . . .	52-8676 thru 52-8679, 52-8681 thru 52-8709, 53-4322 thru 53-4402	52-8637 thru 52-8664, 52-8680
HA ...	. . . . .	. . . . .	52-8665 thru 52-8679, 52-8681 thru 52-8685	52-8613 thru 52-8642, 52-8680

USABLE ON CODES (continued)

Code	YH-21 Serial No.	H-21A Serial No.	H-21B Serial No.	H-21C Serial No.
HB ...	. . . . .	. . . . .	52-8686 thru 52-8709, 53-4322 thru 53-4402, 54-4000 thru 54-4008, 55-5127 thru 55-5131	52-8643 thru 52-8664, 55-4132 thru 55-4221, 56-2015 thru 56-2160, 56-4343 thru 56-4354
HC ...	. . . . .	. . . . .	51-15854 thru 51-15880, 52-8665 thru 52-8679, 52-8681 thru 52-8685	51-15881 thru 51-15913, 52-8613 thru 52-8642, 52-8680
HD ...	. . . . .	. . . . .	52-8665 thru 52-8679, 52-8681 thru 52-8686	52-8613 thru 52-8643, 52-8680
HE ...	. . . . .	. . . . .	52-8687 thru 52-8709, 53-4322 thru 53-4402, 54-4002 thru 54-4008, 55-5127 thru 55-5131	52-8644 thru 52-8664, 55-4132 thru 55-4221, 56-2015 thru 56-2160, 56-4343 thru 56-4354
HF ...	. . . . .	. . . . .	52-8665 thru 52-8679, 52-8681 thru 52-8695	52-8613 thru 52-8650, 52-8680
HG ...	. . . . .	. . . . .	. . . . .	52-8613 thru 52-8664, 52-8680, 55-4132 thru 55-4182
HH ...	. . . . .	. . . . .	. . . . .	55-4183 thru 55-4221, 56-2015 thru 56-2160, 56-4343 thru 56-4354
HI ...	. . . . .	. . . . .	. . . . .	56-2015 thru 56-2160, 56-4343 thru 56-4354
HJ ...	. . . . .	. . . . .	All	51-15881 thru 51-15913, 52-8613 thru 52-8664, 52-8680, 55-4132 thru 55-4221
HK ...	. . . . .	. . . . .	52-8665 thru 52-8679, 52-8681 thru 52-8709, 53-4322 thru 53-4402, 54-4000 thru 54-4008, 55-5127 thru 55-5131	52-8613 thru 52-8664, 52-8680, 55-4132 thru 55-4221
HL ...	. . . . .	. . . . .	53-4322 thru 53-4402, 54-4000 thru 54-4008, 55-5127 thru 55-5131	55-4132 thru 55-4221
HM ...	. . . . .	. . . . .	52-8665 thru 52-8674	52-8613 thru 52-8624
HN ...	. . . . .	. . . . .	52-8675 thru 52-8679, 52-8681 thru 52-8709, 53-4322 thru 53-4402	52-8625 thru 52-8664, 52-8680
HO ...	. . . . .	. . . . .	51-15854 thru 51-15880, 52-8665 thru 52-8674	51-15893 thru 51-15913, 52-8613 thru 52-8624
HP ...	. . . . .	. . . . .	54-4000 thru 54-4008	55-4132 thru 55-4221
HQ ...	. . . . .	. . . . .	. . . . .	55-4132 thru 55-4221
HR ...	. . . . .	. . . . .	52-8671 thru 52-8679, 52-8681 thru 52-8709, 53-4322 thru 53-4402, 54-4000 thru 54-4008, 55-5127 thru 55-5131	52-8622 thru 52-8664, 52-8680, 55-4132 thru 55-4221, 56-2015 thru 56-2160, 56-4343 thru 56-4354
HS ...	. . . . .	. . . . .	51-15854 thru 55-15880, 52-8665 thru 52-8679, 52-8681 thru 52-8709, 53-4322 thru 53-4397	51-15881 thru 51-15913, 52-8613 thru 52-8664, 52-8680, 55-4132 thru 55-4179
HT ...	. . . . .	. . . . .	53-4398 thru 53-4402, 54-4000 thru 54-4008, 55-5127 thru 55-5131	55-4180 thru 55-4221, 56-2015 thru 56-2160, 56-4343 thru 56-4354
HU ...	. . . . .	. . . . .	54-4000 thru 54-4008	52-8661 thru 52-8664, 55-4132 thru 55-4402, 56-2015 thru 56-2160, 56-4343 thru 56-4354
HV ...	. . . . .	. . . . .	. . . . .	51-15881 thru 51-15896, 56-2015 thru 56-2160, 56-4343 thru 56-4354
HW ..	. . . . .	. . . . .	. . . . .	51-15881 thru 51-15896, 55-4132 thru 55-4221
HX ...	. . . . .	. . . . .	53-4386 thru 53-4402, 54-4000 thru 54-4008, 55-5127 thru 55-5131	. . . . .

USABLE ON CODES (continued)

Code	YH-21 Serial No.	H-21A Serial No.	H-21B Serial No.	H-21C Serial No.
HY ...	. . . . .	. . . . .	. . . . .	52-8649 thru 52-8664, 55-4132 thru 55-4421
HZ ...	. . . . .	. . . . .	51-15854 thru 51-15880, 52-8665 thru 52-8669	. . . . .
IA ...	. . . . .	. . . . .	52-8670 thru 52-8679, 52-8681 thru 52-8709, 53-4322 thru 53-4402, 54-4000 thru 54-4008, 55-5127 thru 55-5131	. . . . .
IB ...	. . . . .	. . . . .	. . . . .	51-15881 thru 51-15913, 52-8613 thru 52-8630 52-8631 thru 52-8664, 52-8680, 55-4132 thru 55-4221, 56-2015 thru 56-2160, 56-4343 thru 56-4354
IC ...	. . . . .	. . . . .	. . . . .	
ID ...	. . . . .	. . . . .	51-15854 thru 51-15880, 52-8665 thru 52-8679, 52-8681 thru 52-8709, 53-4322 thru 53-4402	. . . . .
IE	. . . . .	. . . . .	51-15854 thru 51-15880, 52-8665 thru 52-8679, 52-8681 thru 52-8709, 53-4322 thru 53-4356	. . . . .
IF	. . . . .	. . . . .	53-4357 thru 53-4402, 54-4000 thru 54-4008, 55-5127 thru 55-5131	. . . . .
IG ...	50-1231 thru 50-1248	51-15238 thru 51-15269	51-15854 thru 51-15880, 52-8665 thru 52-8679, 52-8681 thru 52-8709, 53-4322 thru 53-4402, 54-4000 thru 54-4008, 55-5127 thru 55-5131	51-15881 thru 51-15913, 52-8613 thru 52-8664, 52-8680, 55-4132 thru 55-4221, 56-2015 thru 56-2047
IH ...	. . . . .	. . . . .	51-15854 thru 51-15880, 52-8665 thru 52-8679, 52-8681 thru 52-8709, 53-4322 thru 53-4402, 54-4000 thru 54-4008, 55-5127 thru 55-5131	51-15881 thru 51-15913, 52-8613 thru 52-8664, 52-8680, 55-4132 thru 55-4221, 56-2015 thru 56-2058
II ...	. . . . .	. . . . .	. . . . .	56-2059 thru 56-2160, 56-4343 thru 56-4354
IJ ...	. . . . .	. . . . .	51-15864 thru 51-15880, 52-8665 thru 52-8679	52-8613 thru 52-8664, 52-8680, 55-4132 thru 55-4221
IK ...	. . . . .	. . . . .	51-15854 thru 51-15880, 52-8665 thru 52-8679, 52-8681 thru 52-8709, 53-4322 thru 53-4397	. . . . .
IL ...	. . . . .	. . . . .	53-4398 thru 53-4402, 54-4000 thru 54-4008, 55-5127 thru 55-5131	. . . . .
IM ...	. . . . .	. . . . .	51-15864 thru 51-15880, 52-8665 thru 52-8679, 52-8681 thru 52-8709, 53-4322 thru 53-4395	52-8613 thru 52-8664, 52-8680, 55-4132 thru 55-4190
IN ...	. . . . .	. . . . .	53-4396 thru 53-4402, 54-4000 thru 54-4008, 55-5127 thru 55-5131	55-4191 thru 55-4221, 56-2015 thru 56-2160, 56-4343 thru 56-4354
IO ...	. . . . .	. . . . .	. . . . .	56-2015 thru 56-2072
IP ...	. . . . .	. . . . .	. . . . .	56-2073 thru 56-2160, 56-4343 thru 56-4354
IQ ...	. . . . .	. . . . .	. . . . .	52-8634 thru 52-8664, 52-8680, 55-4132 thru 55-4178 55-4179 thru 55-4221
IR ...	. . . . .	. . . . .	. . . . .	51-15881 thru 51-15913,
IS ...	. . . . .	. . . . .	. . . . .	52-8613 thru 52-8664, 52-8680, 55-4132 thru 55-4221

USABLE ON CODES (continued)

Code	YH-21 Serial No.	H-21A Serial No.	H-21B Serial No.	H-21C Serial No.
IT ...	50-1231 thru 50-1248	51-15238 thru 51-15269	51-15854 thru 51-15880, 52-8665 thru 52-8679, 52-8681 thru 52-8709, 53-4322 thru 53-4402, 54-4000 thru 54-4008, 55-5127 thru 55-5131	51-15881 thru 51-15913, 52-8613 thru 52-8664, 52-8680, 55-4132 thru 55-4221, 56-2015 thru 56-2072
IU ...	. . . . .	. . . . .	52-8684 thru 52-8709, 53-4322 thru 53-4402, 54-4000 thru 54-4008, 55-5127 thru 55-5131	52-8635 thru 52-8664, 52-8680, 55-4132 thru 55-4221, 56-2015 thru 56-2160, 56-4343 thru 56-4354
IV ...	. . . . .	. . . . .	53-4396 thru 53-4402, 54-4000 thru 54-4008, 55-5127 thru 55-5131	55-4132 thru 55-4221
IW ...	. . . . .	. . . . .	. . . . .	55-4159 thru 55-4221
IX ...	. . . . .	. . . . .	. . . . .	51-15881 thru 51-15913, 52-8613 thru 52-8664, 52-8680, 55-4132 thru 55-4221, 56-2015 thru 56-2035
IY ...	. . . . .	. . . . .	. . . . .	56-2036 thru 56-2160, 56-4343 thru 56-4354
IZ ...	. . . . .	51-15238 thru 51-15269	51-15854 thru 51-15880, 52-8665 thru 52-8679, 52-8681 thru 52-8709, 53-4322 thru 53-4402, 54-4000 thru 54-4008, 55-5127 thru 55-5131	. . . . .
JA ...	. . . . .	. . . . .	53-4396 thru 53-4402, 54-4000 thru 54-4008, 55-5127 thru 55-5131	. . . . .
JB ...	. . . . .	. . . . .	51-15854 thru 51-15880, 52-8665 thru 52-8679, 52-8681 thru 52-8709, 53-4322 thru 53-4395	51-15881 thru 51-15913, 52-8613 thru 52-8664, 52-8680, 55-4132 thru 55-4152
JC ...	. . . . .	. . . . .	. . . . .	55-4153 thru 55-4221
JD ...	. . . . .	. . . . .	53-4396 thru 53-4402, 54-4000 thru 54-4008, 55-5127 thru 55-5131	56-2015 thru 56-2160, 56-4343 thru 56-4354
JE ...	. . . . .	. . . . .	52-8665 thru 52-8679, 52-8681 thru 52-8709, 53-4322 thru 53-4395	52-8613 thru 52-8664, 52-8680, 55-4132 thru 55-4203
JF ...	. . . . .	. . . . .	53-4396 thru 53-4402, 54-4000 thru 54-4008, 55-5127 thru 55-5131	55-4204 thru 55-4221, 56-2015 thru 56-2160, 56-4343 thru 56-4354
JG ...	. . . . .	. . . . .	53-4396 thru 53-4402, 54-4000 thru 54-4008, 55-5127 thru 55-5131	55-4181thru 55-4221, 56-2015 thru 56-2160, 56-4343 thru 56-4354
JH ...	. . . . .	. . . . .	51-15854 thru 51-15880, 52-8665 thru 52,8679, 52-8681 thru 52-8709, 53-4322 thru 53-4395	51-15871 thru 51-15913, 52-8613 thru 52-8664, 52-8680, 55-4132 thru 55-4221
JI ...	. . . . .	. . . . .	53-4346 thru 53-4383	. . . . .
JJ ...	. . . . .	. . . . .	51-15854 thru 51-15880, 52-8665 thru 52-8679, 52-8681 thru 52-8709, 53-4322 thru 53-4383	. . . . .
JK ...	. . . . .	. . . . .	51-15854 thru 51-15880, 52-8665 thru 52-8679, 52-8681 thru 52-8709, 53-4322 thru 53-4345	51-15881 thru 51-15913, 52-8613 thru 52-8664, 52-8680
JL ...	50-1231 thru 50-1248	51-15238 thru 51-15269	51-15854 thru 51-15880, 52-8665 thru 52-8679, 52-8681 thru 52-8709, 53-4322 thru 53-4402, 54-4000 thru 54-4008, 55-5127 thru 55-5129	51-15881 thru 51-15913, 52-8613 thru 52-8664, 52-8680, 55-4132 thru 55-4221, 56-2015 thru 56-2158
JM ...	. . . . .	. . . . .	55-5130, 55-5131	56-2159, 56-2160, 56-4343 thru 56-4354

USABLE ON CODES (continued)

Code	YH-21 Serial No.	H-21A Serial No.	H-21B Serial No.	H-21C Serial No.
JN ...	. . . . .	. . . . .	52-8682 thru 52-8709, 53-4322 thru 53-4395	52-8643 thru 52-8664, 55-4132 thru 55-4221
JO ...	50-1231 thru 50-1248	51-15238 thru 51-15259	. . . . .	51-15881 thru 51-15883
JP ...	. . . . .	51-15260 thru 51-15269	51-15854 thru 51-15880, 52-8665 thru 52-8679, 52-8681 thru 52-8709, 53-4322 thru 53-4402, 54-4000 thru 54-4008, 55-5127 thru 55-5131	51-15884 thru 51-15913, 52-8613 thru 52-8664, 52-8680, 55-4132 thru 55-4221, 56-2015 thru 56-2160, 56-4343 thru 56-4354
JQ ...	. . . . .	. . . . .	51-15854 thru 51-15880, 52-8665, 52-8666	51-15881 thru 51-15913, 52-8613 thru 52-8616
JR ...	. . . . .	. . . . .	52-8667 thru 52-8679, 52-8681 thru 52-8709, 53-4322 thru 53-4395	52-8617 thru 52-8664, 52-8680, 55-4132 thru 55-4221, 56-2015 thru 56-2047
JS ...	. . . . .	. . . . .	51-15854 thru 51-15880, 52-8665 thru 52-8679, 52-8681 thru 52-8709, 53-4322 thru 53-4383	51-15881 thru 51-15913, 52-8613 thru 52-8664, 52-8689, 55-4132 thru 55-4221
JT ...	. . . . .	. . . . .	52-8665 thru 52-8679, 52-8681 thru 52-8709, 53-4322 thru 53-4400	52-8613 thru 52-8664, 52-8680, 55-4132 thru 55-4221, 56-2015 thru 56-2073
JU ...	. . . . .	. . . . .	53-4401, 53-4402, 54-4000 thru 54-4008, 55-5127 thru 55-5131	56-2074 thru 56-2160, 56-4343 thru 56-4354
JV ...	. . . . .	. . . . .	52-8665 thru 52-8679, 52-8681 thru 52-8709, 53-4322 thru 53-4401	. . . . .
JW ...	. . . . .	. . . . .	53-4402, 54-4000 thru 54-4008, 55-5127 thru 55-5131	. . . . .
JX ...	. . . . .	. . . . .	. . . . .	51-15885 thru 51-15890
JY ...	. . . . .	. . . . .	. . . . .	55-4132 thru 55-4221, 56-2015 thru 56-2058
JZ ...	. . . . .	. . . . .	51-15854 thru 51-15880, 52-8665 thru 52-8679, 52-8681 thru 52-8709, 53-4322 thru 53-4402, 54-4000 thru 54-4004	51-15881 thru 51-15913, 52-8613 thru 52-8664, 52-8680, 55-4132 thru 55-4221, 56-2015 thru 56-2136
KA ...	. . . . .	. . . . .	54-4005 thru 54-4008	56-2137 thru 56-2160, 56-4343 thru 56-4354
KB ...	. . . . .	. . . . .	54-4000 thru 54-4004	55-4132 thru 55-4402, 56-2015 thru 56-2136
KC ...	. . . . .	. . . . .	52-8696 thru 52-8709, 53-4322 thru 53-4402, 54-4000 thru 54-4004	52-8651 thru 52-8664, 55-4132 thru 55-4221, 56-2015 thru 56-2136
KD ...	. . . . .	. . . . .	51-15854 thru 51-15880, 52-8665 thru 52-8679, 52-8681 thru 52-8709, 53-4322 thru 53-4397	51-15881 thru 51-15913, 52-8613 thru 52-8664, 52-8680, 55-4132 thru 55-4221
KE ...	. . . . .	51-15238 thru 51-15269	51-15854 thru 51-15880, 52-8665 thru 52-8679, 52-8681 thru 52-8709, 53-4322 thru 53-4402, 54-4000 thru 54-4002	51-15881 thru 51-15913, 52-8613 thru 52-8664, 52-8680, 55-4132 thru 55-4221, 56-2015 thru 56-2113
KF ...	. . . . .	. . . . .	54-4003 thru 54-4008	56-2114 thru 56-2160, 56-4343 thru 56-4354
KG ...	. . . . .	. . . . .	52-8665 thru 52-8679, 52-8681 thru 52-8709, 53-4322 thru 53-4395	52-8613 thru 52-8664, 52-8680, 55-4132 thru 55-4221
KH ...	. . . . .	. . . . .	. . . . .	56-2030 thru 56-2160, 56-4343 thru 56-4354
KI ...	. . . . .	. . . . .	. . . . .	56-2015 thru 56-2022
KJ ...	. . . . .		. . . . .	56-2015 thru 56-2029
KK ...	. . . . .	. . . . .	. . . . .	56-2023 thru 56-2160, 56-4343 thru 56-4354
KL ...	. . . . .	. . . . .	52-8686 thru 52-8709, 53-4332 thru 53-4395	52-8643 thru 52-8664, 55-4132 thru 55-4221, 56-2015 thru 56-2072

USABLE ON CODES (continued)

Code	YH-21 Serial No.	H-21A Serial No.	H-21B Serial No.	H-21C Serial No.
KM ...	. . . . .	. . . . .	51-15854 thru 51-15880, 52-8665 thru 52-8679, 52-8681 thru 52-8709, 53-4322 thru 53-4395	51-15881 thru 51-15913, 52-8613 thru 52-8664, 52-8680, 55-4132 thru 55-4221, 56-2015 thru 56-2047

Index No.	Description	Fig. No.
1	Rotor Hub	2
2	Rotor Blade	3 & 3A
3	Rainshield	5
4	Forward Transmission	42
5	Drive Shafting	44
6	Central Transmission	41
7	Engine Drive Shaft	45
8	Aft Transmission	43
9	Tail Section	6
10	Nose Enclosure	17
11	Cabin and Rescue Doors	18 & 18A
12	Auxiliary Alighting Gear	25 & 26
13	Main Alighting Gear	23 & 24
14	Fuel Tank	32
15	Power Plant	27
16	Power Plant Oil Tank	30 & 30A
17	Fuselage Structure	7 & 8

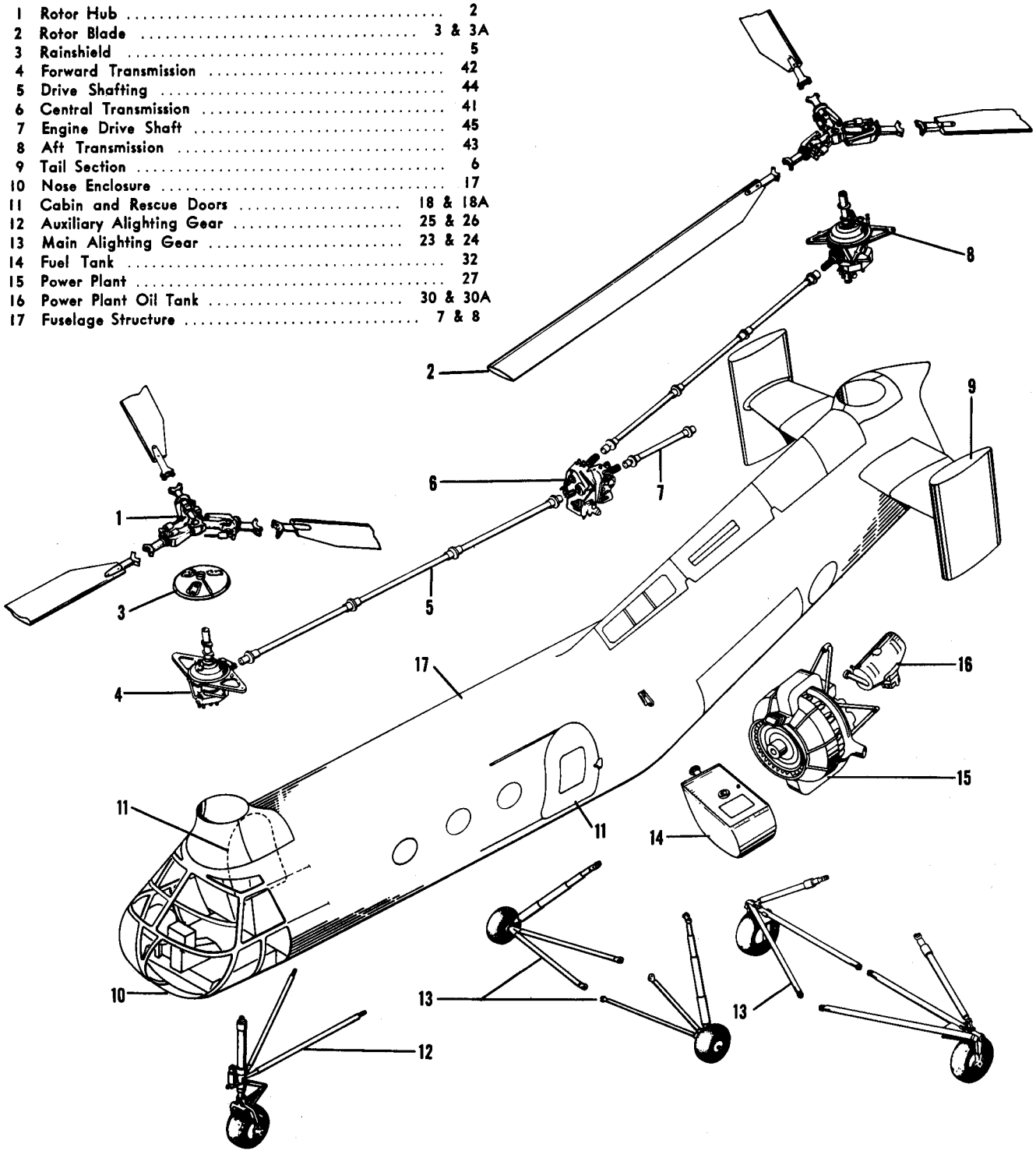

Figure 1. Exploded View, H-21 Helicopter

Graphical Index

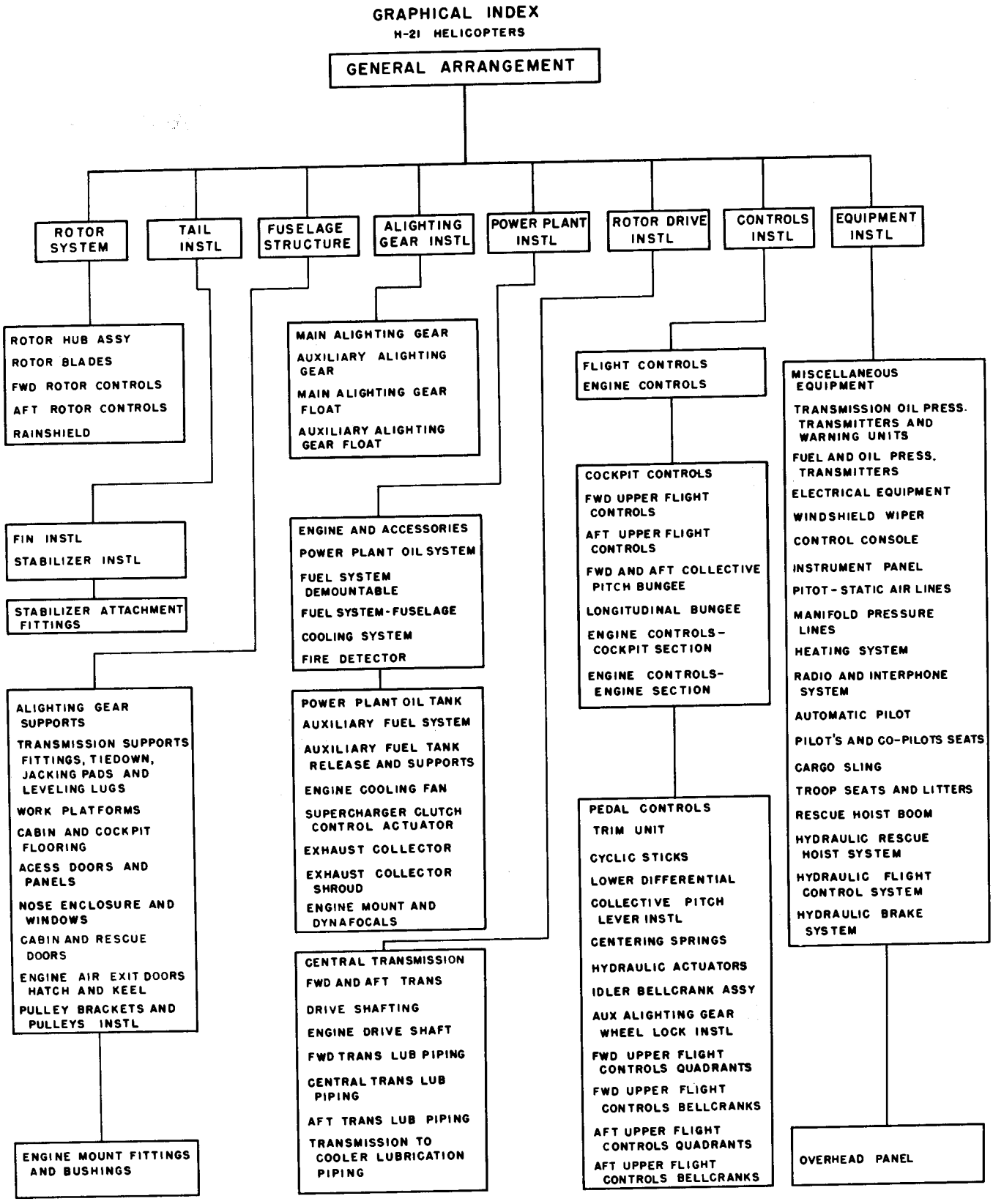

SECTION II
GROUP ASSEMBLY PARTS LIST

Rotor

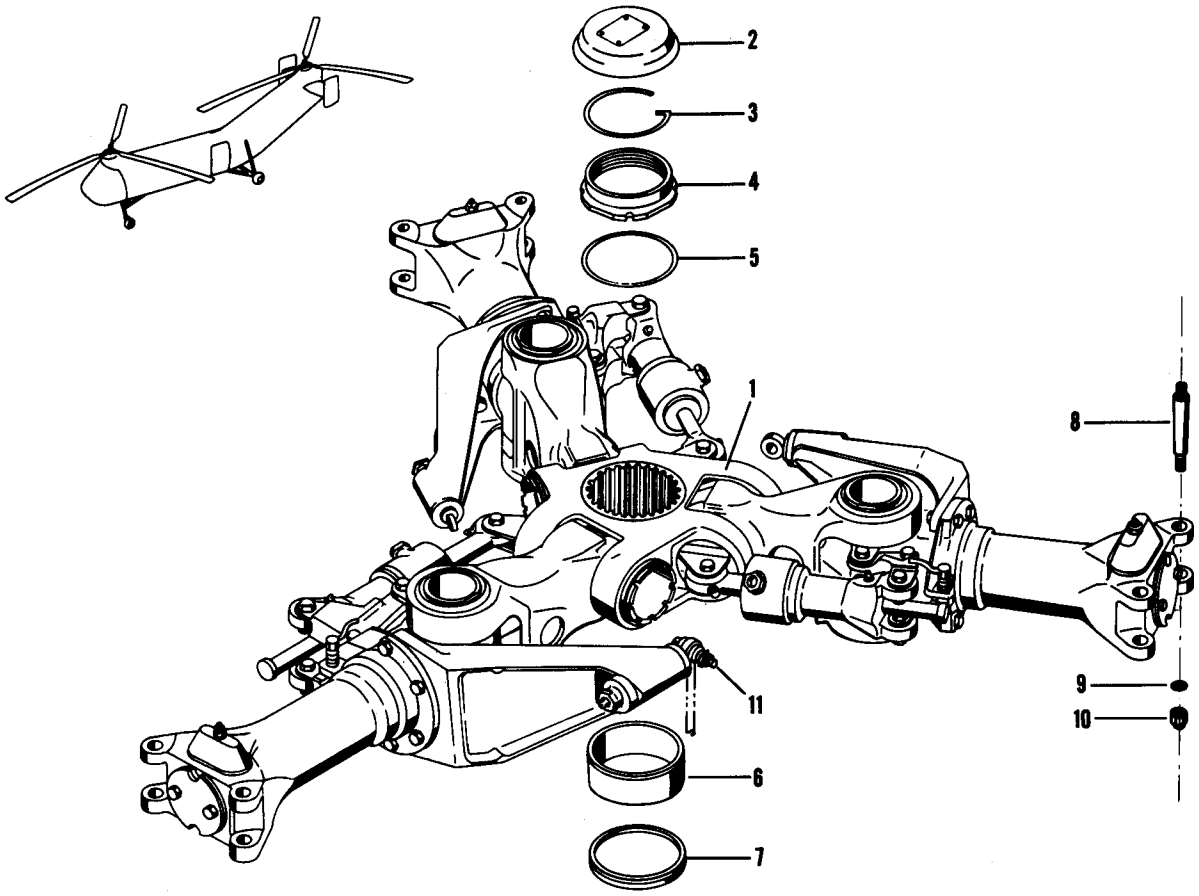

Figure 2. Rotor Hub

Figure and Index Number	Part Number	Description 1 2 3 4 5 6 7	Units per Assembly	Usable On Code
	22R0001-4	ROTOR SYSTEM INSTALLATION	1	A
	22R0001-3	ROTOR SYSTEM INSTALLATION	1	E
	22R0001-5	ROTOR SYSTEM INSTALLATION	1	AU
	22R0001-7	ROTOR SYSTEM INSTALLATION	1	
2-1	22R2001-15	. HUB ASSEMBLY, Fwd rotor (may be modified to 22R2001-13 or 42R2001-3), see Rotor Hub Assembly Illustrated Parts Breakdown T.O. 1HA1-4-3-14 (used with 22R1251-13 and -23 blades)	1	
	22R2001-16	. HUB ASSEMBLY, Aft rotor (may be modified to 22R2001-14 or 42R2001-4), see Rotor Hub Assembly Illustrated Parts Breakdown T.O. 1HA1-4-3-14 (used with 22R1251-14 and -24 blades)	1	
	22R2001-9	. HUB ASSEMBLY, Fwd rotor (may be modified to 22R2001-13 or 42R2001-3), see Rotor Hub Assembly Illustrated Parts Breakdown T.O. 1HA1-4-3-14 (used with 22R1251-13 and -23 blades)	1	
	22R2001-10	. HUB ASSEMBLY, Aft rotor (may be modified to 22R2001-14 or 42R2001-4), see Rotor Hub Assembly Illustrated Parts Breakdown T.O. 1HA1-4-3-14 (used with 22R1251-14 and -24 blades)	1	
	22R2001-7	. HUB ASSEMBLY, Fwd rotor (may be modified to 22R2001-11 or 42R2001-1), see Rotor Hub Assembly Illustrated Parts Breakdown T.O. 1HA1-4-3-14 (used with 22R1251-13 and -23 blades)	1	
	22R2001-8	. HUB ASSEMBLY, Aft rotor (may be modified to 22R2001-12 or 42R2001-2), see Rotor Hub Assembly Illustrated Parts Breakdown T.O. 1HA1-4-3-14 (used with 22R1251-14 and -24 blades)	1	

Figure and Index Number	Part Number	Description 1 2 3 4 5 6 7	Units per Assembly	Usable On Code
2-	22R2001-13	. HUB ASSEMBLY, Fwd rotor (modified from 22R2001-9 or -15, may be modified to 42R2001-3), see Rotor Hub Assembly Illustrated Parts Breakdown T.O. 1HA1-4-3-14 (used with 22R1251-33 and -35 blades)	1	
	22R2001-14	. HUB ASSEMBLY, Aft rotor (modified from 22R2001-10 or -16, may be modified to 42R2001-4), see Rotor Hub Assembly Illustrated Parts Breakdown T.O. 1HA1-4-3-14 (used with 22R1251-34 and -36 blades)	1	
	22R2001-11	. HUB ASSEMBLY, Fwd rotor (modified from 22R2001-7, may be modified to 42R2001-1), See Rotor Hub Assembly Illustrated Parts Breakdown T.O. 1HA1-4-3-14 (used with 22R1251-33 and -35 blades)	1	
	22R2001-12	. HUB ASSEMBLY, Aft rotor (modified from 22R2001-8, may be modified to 42R2001-2), see Rotor Hub Assembly Illustrated Parts Breakdown T.O. 1HA1-4-3-14 (used with 22R1251-34 and -36 blades)	1	
	42R2001-3	. HUB ASSEMBLY, Fwd rotor, see Rotor Hub Assembly Illustrated Parts Breakdown T.O. 1HA1-4-3-14 (used with 22R1251-33 and -35 blades)	1	
	42R2001-4	. HUB ASSEMBLY, Aft rotor, see Rotor Hub Assembly Illustrated Parts Breakdown T.O. 1HA1-4-3-14 (used with 22R1251-34 and -36 blades)	1	
	42R2001-1	. HUB ASSEMBLY, Fwd rotor (modified from 22R2001-7 or -11), see Rotor Hub Assembly Illustrated Parts Breakdown T.O. 1HA1-4-3-14 (used with 22R1251-33 and -35 blades)	1	
	42R2001-2	. HUB ASSEMBLY, Aft rotor (modified from 22R2001-8 or -12), see Rotor Hub Assembly Illustrated Parts Breakdown T.O. 1HA1-4-3-14 (used with 22R1251-34 and -36 blades)	1	
		Attaching Parts		
-2	22R2108-2 or	. CAP	1	
	22R2108-1	. CAP	1	
-3	22R2049-1	. RING	1	
-4	22R2047-1	. NUT	1	
-5	22R2048-1	. WASHER	1	
		———*———		
-6	22R2115-2 or	. . SPACER (Used with aft rotor hub assembly)	1	
	22R2115-1	. . SPACER, (Used with aft rotor hub assembly)	1	
-7	22R2111-1	. . COLLAR	1	
-8	22R2078-1	. . PIN, Blade attachment tapered (used with 22R2001-7, -8, -9, -10, -15 and -16)	6	
	42R2063-1	. . PIN, Blade attachment tapered (used with 22R2001-11, -12, -13, -14, and 42R2001-1, -2, -3, and -4)	6	
-9	AN975-8	. . WASHER	6	
-10	52NE-080	. . NUT (EN)	6	
-11	AN174-13	. . BOLT	3	
	AN381-2-8	. . PIN, Cotter	3	
	AN310-4	. . NUT	3	
	AN960-416	. . WASHER	3	

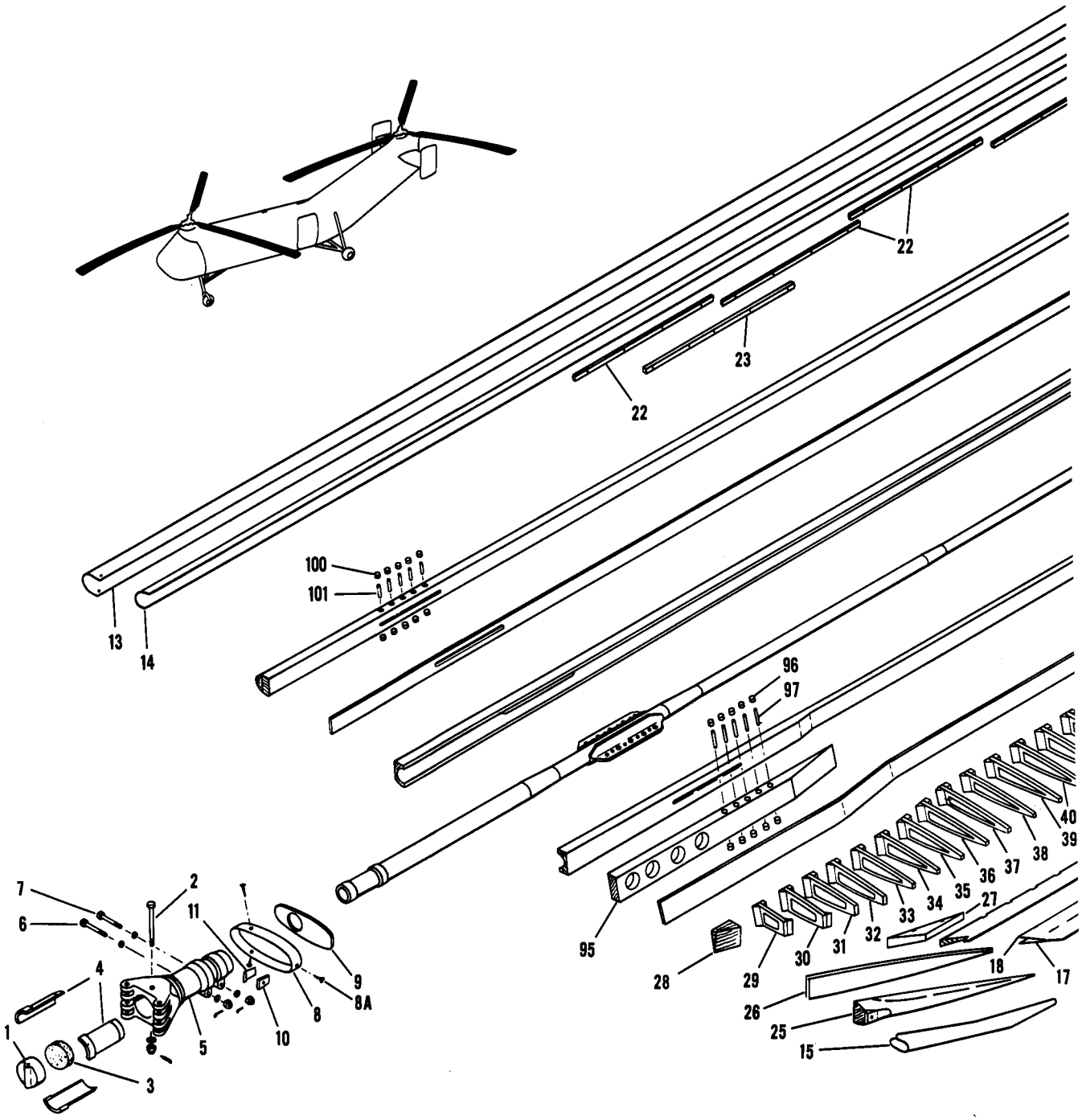

Figure 3. Wooden Rotor Blades (Sheet 1 of 2)

Rotor

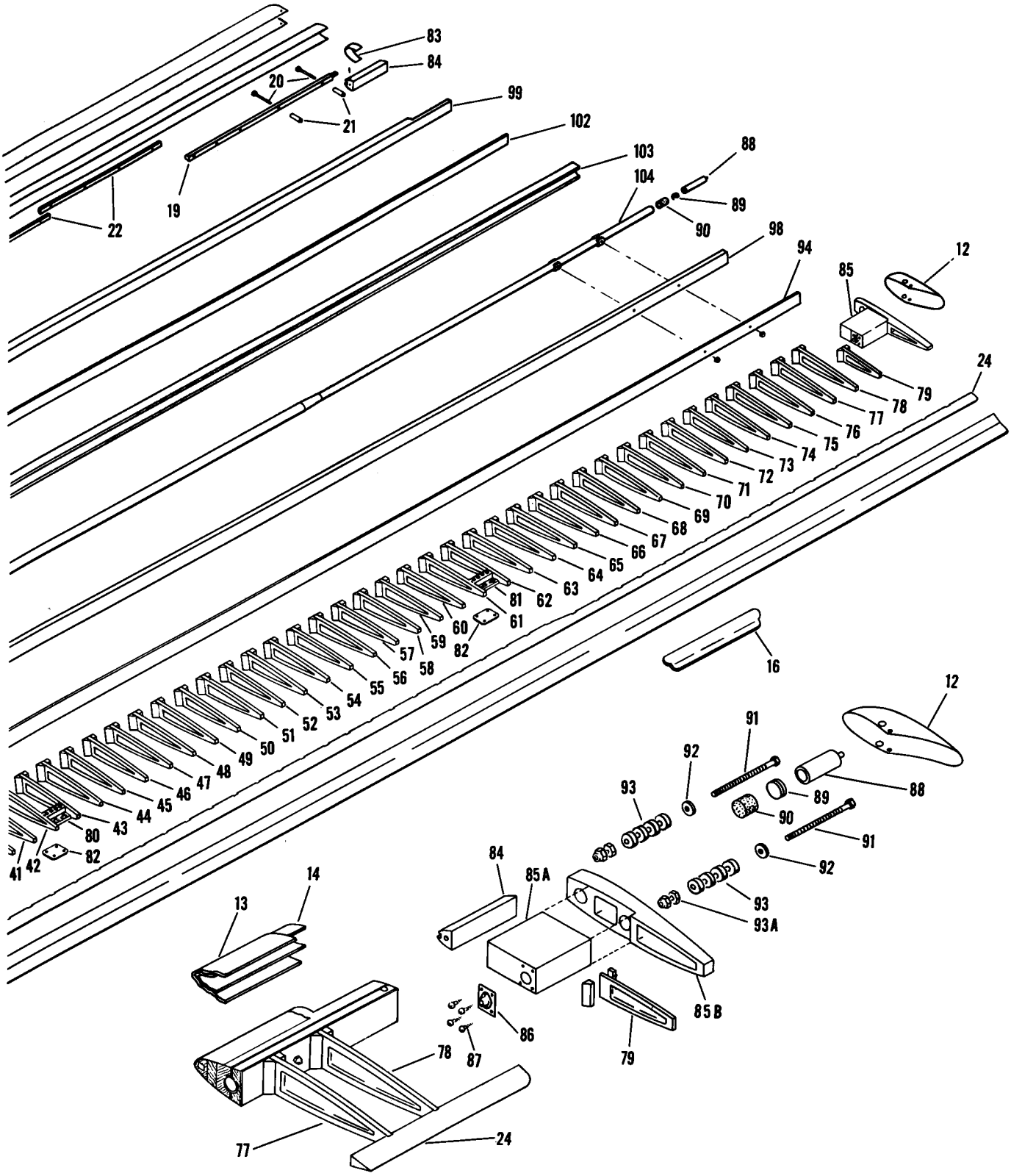

Figure 3. Wooden Rotor Blades (Sheet 2 of 2)

Figure and Index Number	Part Number	Description 1 2 3 4 5 6 7	Units per Assembly	Usable On Code
3-	22R1251-23	BLADE SET, Fwd wooden twisted (used with 22R2001-7, -9, and -15 hubs)	1	
	or			
	22R1251-13	BLADE SET, Fwd wooden twisted (used with 22R2001-7, -9, and -15 hubs)	1	
	22R1251-24	BLADE SET, Aft wooden twisted (used with 22R2001-8, -10, and -16 hubs)	1	
	or			
	22R1251-14	BLADE SET, Aft wooden twisted (used with 22R2001-8, -10, and -16 hubs)	1	
	22R1251-35	BLADE SET, Fwd wooden twisted (used with 22R2001-11 and -13 hubs)	1	
	or			
	22R1251-33	BLADE SET, Fwd wooden twisted (used with 22R2001-11 and -13 hubs)	1	
	22R1251-36	BLADE SET, Aft wooden twisted (used with 22R2001-12 and -14 hubs)	1	
	or			
	22R1251-34	BLADE SET, Aft wooden twisted (used with 22R2001-12 and -14 hubs)	1	
	22R1003-241	. BLADE ASSEMBLY, Fwd wooden twisted (used with 22R1251-13 and -23)	3	
	or			
	22R1003-141	. BLADE ASSEMBLY, Fwd wooden twisted (used with 22R1251-13 and -23)	3	
	22R1003-242	. BLADE ASSEMBLY, Aft wooden twisted (used with 22R1251-14 and -24)	3	
	or			
	22R1003-142	. BLADE ASSEMBLY, Aft wooden twisted (used with 22R1251-14 and -24)	3	
	22R1003-441	. BLADE ASSEMBLY, Fwd wooden twisted (used with 22R1251-35) ..	3	
	22R1003-341	. BLADE ASSEMBLY, Fwd wooden twisted (used with 22R1251-33) ..	3	
	22R1003-442	. BLADE ASSEMBLY, Aft wooden twisted (used with 22R1251-36) ...	3	
	22R1003-342	. BLADE ASSEMBLY, Aft wooden twisted (used with 22R1251-34) ...	3	
-1	22R1202-1	. . PLUG	1	
		Attaching Parts		
-2	AN6-45	. . BOLT (Used with 22R1003-141, -142, -241, and -242)	1	
	AN6-53	. . BOLT (Used with 22R1003-341, -342, -441, and -442)	1	
	AN381-3-12	. . PIN, Cotter	1	
	AN310-6	. . NUT	1	
	AN960-616	. . WASHER (Used with 22R1200-1 and -2)	1	
	AN960-616	. . WASHER (Used with 22R1364-1)	2	
		———*———		
-3	32	. . CORK, Commercial	1	
-4	22R1201-1	. . SLEEVE, Split	1	
-5	22R1200-2	. . SOCKET (Used with 22R1003-141, -142, -241, and -242)	1	
	or			
	22R1200-1	. . SOCKET (Used with 22R1003-141, -142, -241, and -242)	1	
	22R1364-1	. . SOCKET (Used with 22R1003-341, -342, -441, and -442)	1	
		Attaching Parts		
-6	AN8-31	. . BOLT	1	
-7	AN8-26	. . BOLT	1	
	AN381-3-16	. . PIN, Cotter	2	
	AN310-8	. . NUT	2	
	AN960-816	. . WASHER	4	
		———*———		
-8	22R1242-1	. . CLAMP	1	
		Attaching Parts		
-8A	8 x ¾	. . SCREW, Round hd stainless steel	1	
	4 x ½	. . SCREW, Round hd stainless steel	2	
		———*———		
-9	22R1219-1	. . COVER	1	
		Attaching Parts		
	4 x ½	. . SCREW, Round hd stainless steel	7	
		———*———		
-10	22R1232-1	. . WEDGE	1	
-11	22R1003-26	. . SHIM	1	

Figure and Index Number	Part Number	1 2 3 4 5 6 7 Description	Units per Assembly	Usable On Code
3-12	22R1236-1	. . COVER, Tip	1	
		Attaching Parts		
	AN507C632R6	. . SCREW	2	
	3R1127	. . INSERT	2	
	22R1238-1	. . SCREW	1	
	AN381-2-32	. . PIN, Cotter	1	
	22R1239-1	. . NUT	1	
		———*———		
-13	22R1235-12	. . STRIP, Leading edge protective (209.880 in. long) (used with 22R1003-441 and -442)	1	
	22R1235-11	. . STRIP, Leading edge protective (209.880 in. long) (used with 22R1003-141, -142, -241, -242, -341, and -342)	1	
	22R1235-1	. . STRIP, Leading edge protective (169.880 in. long) (used with 22R1235-2 as substitute for 22R1235-11)	1	
	22R1235-2	. . STRIP, Leading edge protective (40 in. long) (used with 22R1235-1 as substitute for 22R1235-11)	1	
		Attaching Parts		
	3 x 5/8	. . SCREW, Flat hd stainless steel	AR	
		———*———		
-14	22R1003-33	. . STRIP, Leading edge backing (211 in. long) (used with 22R1003-441 and -442)	1	
-15	22R1361-1	. . REINFORCEMENT, Fairing	1	
-16	22R1363-1*	. . TAB ASSEMBLY	1	
-17	22R1358-1	. . REINFORCEMENT ASSEMBLY	1	
-18	22R1358-2	. . REINFORCEMENT ASSEMBLY	1	
	22R1003-16	. . COVER, Blade	2	
	22R1003-17	. . COVER, Blade	2	
-19	22R1244-1	. . BALANCE, Outbd	1	
		Attaching Parts		
-20	22R1246-1	. . BOLT	2	
	AN381-2-8	. . PIN, Cotter	2	
	AN310-4	. . NUT	2	
	AN970-4	. . WASHER	2	
	AN960-416L	. . WASHER	AR	
	AN545-8-10	. . SCREW	6	
		———*———		
-21	22R1247-1	. . BUSHING	2	
-22	22R1245-1	. . BALANCE, Inbd	5	
		Attaching Parts		
	AN545-6-5	. . SCREW	AR	
		———*———		
-23	22R1248-1	. . BALANCE, Auxiliary	AR	
		Attaching Parts		
	AN545-6-10	. . SCREW	AR	
		———*———		
-24	22R1003-15	. . STRIP, Trailing edge cap	1	
	22R1231-1	. . FAIRING ASSEMBLY	1	
-25	22R1231-3	. . . FAIRING	1	
-26	22R1231-2	. . . STRIP, Cap	1	
-27	22R1003-47	. . STRIP	1	
-28	22R1003-20	. . BLOCK	1	
-29	22R1220-3	. . RIB	1	
-30	22R1220-4	. . RIB	1	
	22R1003-27	. . BLOCK	2	
-31	22R1220-5	. . RIB	1	
-32	22R1220-6	. . RIB	1	
-33	22R1220-7	. . RIB	1	
-34	22R1220-8	. . RIB	1	
-35	22R1220-9	. . RIB	1	
-36	22R1220-10	. . RIB	1	
	22R1003-22	. . BLOCK	8	

*Use of blade sets without tab assembly is permissible.

Figure and Index Number	Part Number	Description 1 2 3 4 5 6 7	Units per Assembly	Usable On Code
3-	22R1003-12	. . BLOCK	8	
-37	22R1220-11	. . RIB	1	
-38	22R1220-12	. . RIB	1	
-39	22R1220-13	. . RIB	1	
-40	22R1220-14	. . RIB	1	
-41	22R1220-15	. . RIB	1	
-42	22R1220-16	. . RIB	1	
-43	22R1220-17	. . RIB	1	
-44	22R1220-18	. . RIB	1	
-45	22R1220-19	. . RIB	1	
-46	22R1220-20	. . RIB	1	
-47	22R1220-21	. . RIB	1	
-48	22R1220-22	. . RIB	1	
-49	22R1220-23	. . RIB	1	
-50	22R1220-24	. . RIB	1	
-51	22R1220-25	. . RIB	1	
-52	22R1220-26	. . RIB	1	
-53	22R1220-27	. . RIB	1	
-54	22R1220-28	. . RIB	1	
-55	22R1220-29	. . RIB	1	
-56	22R1220-30	. . RIB	1	
-57	22R1220-31	. . RIB	1	
-58	22R1220-32	. . RIB	1	
-59	22R1220-33	. . RIB	1	
-60	22R1220-34	. . RIB	1	
-61	22R1220-35	. . RIB	1	
-62	22R1220-36	. . RIB	1	
-63	22R1220-37	. . RIB	1	
-64	22R1220-38	. . RIB	1	
-65	22R1220-39	. . RIB	1	
-66	22R1220-40	. . RIB	1	
-67	22R1220-41	. . RIB	31	
	22R1003-23	. . BLOCK	31	
	22R1003-13	. . BLOCK	1	
-68	22R1220-42	. . RIB	1	
-69	22R1220-43	. . RIB	1	
-70	22R1220-44	. . RIB	1	
-71	22R1220-45	. . RIB	1	
-72	22R1220-46	. . RIB	1	
-73	22R1220-47	. . RIB	1	
-74	22R1220-48	. . RIB	1	
-75	22R1220-49	. . RIB	1	
-76	22R1220-50	. . RIB	1	
-77	22R1220-51	. . RIB	1	
-78	22R1220-52	. . RIB	1	
-79	22R1220-53	. . RIB	8	
	22R1003-24	. . BLOCK	8	
	22R1003-14	. . BLOCK	1	
-80	22R1228-2	. . BOX, Balance	1	
-81	22R1228-1	. . BOX, Balance	8	
	22R1003-25	. . DOWEL, Balance	2	
-82	22R1217-1	. . COVER, Balance box	4	
		Attaching Parts		
	AN507C632R10	. . SCREW	1	
-83	22R1003-31	. . SPACER (Used with 22R1003-141, -142, -241, -242, -341, and -342)	1	
-84	22R1237-1	. . CONTAINER	1	
-85	22R1218-11	. . BLOCK ASSEMBLY	1	
-85A	22R1230-1	. . . BLOCK	1	
-85B	22R1218-1	. . . BLOCK	1	
-86	22R1218-4	. . . PLATE ASSEMBLY	1	

Figure and Index Number	Part Number	1 2 3 4 5 6 7 Description	Units per Assembly	Usable On Code
3-		*Attaching Parts*		
-87	AN545-3-6	. . . SCREW	4	
		———*———		
	22R1241-1	. . CUP ASSEMBLY	1	
	or			
	22R1241-5	. . CUP ASSEMBLY	1	
-88	22R1241-2	. . . CUP (Used with 22R1241-1)	1	
	22R1241-4	. . . CUP (Used with 22R1241-5)	1	
-89	22R1241-3	. . . CAP	1	
-90	14	. . CORK, Commercial	1	
	22R1243-1	. . BALANCE ASSEMBLY	2	
-91	22R1243-4	. . . BOLT	1	
-92	22R1243-5	. . . WASHER	1	
-93	22R1243-2	. . . BALANCE	AR	
-93A	AN150407	. . . NUT, Check	1	
	or			
	AN345-10	. . . NUT	1	
	AN364-1032	. . . NUT	1	
	AN995C41	. . . WIRE, Lock	AR	
	22R1003-45	. . SPAR ASSEMBLY, Forward (used with 22R1003-141)	1	
	22R1003-49	. . SPAR ASSEMBLY, Forward (used with 22R1003-441)	1	
	22R1003-46	. . SPAR ASSEMBLY, Aft (used with 22R1003-142)	1	
	22R1003-50	. . SPAR ASSEMBLY, Aft (used with 22R1003-442)	1	
-94	22R1003-9	. . . WEB	1	
-95	22R1003-11	. . . BLOCK, Spar	1	
-96	22R1003-29	. . . PLUG	10	
-97	22R1215-2	. . . DOWEL	5	
-98	22R1003-8	. . . SPAR HALF, Aft	1	
-99	22R1003-7	. . . EDGE, Leading (laminated)	2	
-100	22R1003-29	. . . PLUG	10	
-101	22R1215-1	. . . DOWEL	5	
-102	22R1003-10	. . . WEB	1	
-103	22R1003-8	. . . SPAR HALF, Fwd	1	
-104	22R1211-2	. . . SPAR ASSEMBLY (Used with 22R1003-45 and -46)	1	
	22R1211-5	. . . SPAR ASSEMBLY (Used with 22R1003-49 and -50)	1	

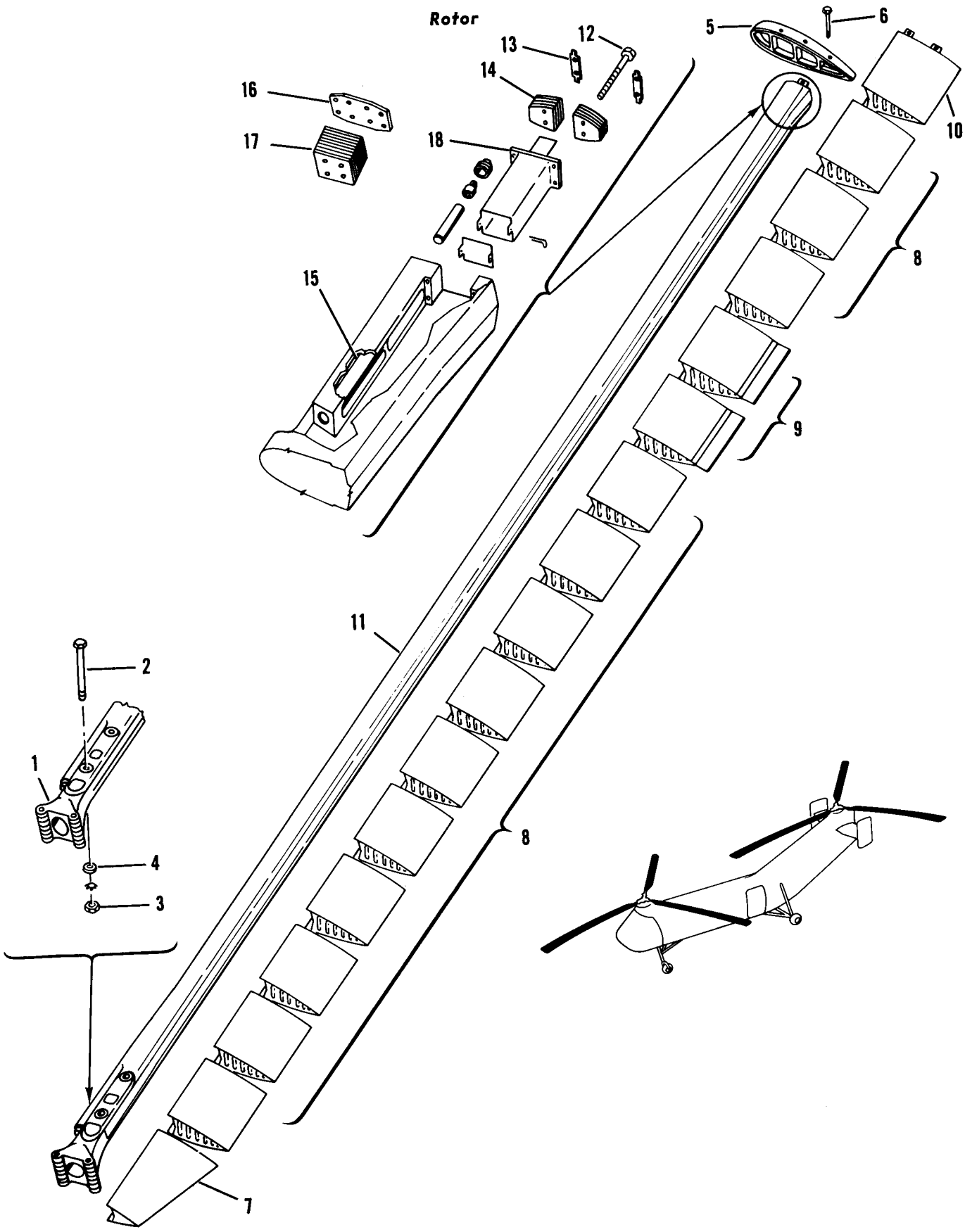

Figure 3A. Metal Rotor Blades

Figure and Index Number	Part Number	Description 1 2 3 4 5 6 7	Units per Assembly	Usable On Code
3A-	22R1191-3	BLADE SET, Fwd metal	1	AU
	22R1191-4	BLADE SET, Aft metal	1	AU
	22R1180-9	. BLADE ASSEMBLY, Fwd metal	3	AU
	22R1180-7	. BLADE ASSEMBLY, Fwd metal (alternate)	3	AU
	22R1180-10	. BLADE ASSEMBLY, Aft metal	3	AU
	22R1180-8	. BLADE ASSEMBLY, Aft metal (alternate)	3	AU
-1	42R1060-1	. . YOKE, Fwd	1	AU
	42R1060-2	. . YOKE, Aft	1	AU
		Attaching Parts		
-2	22R1092-1	. . PIN	2	AU
-3	22R1091-1	. . NUT	2	AU
	SAE W-07	. . WASHER, Lock	2	AU
-4	22R1149-1	. . WASHER	2	AU
		———*———		
-5	22R1312-1	. . COVER ASSEMBLY, Tip (used on 22R1180-9 and -10)	1	AU
	22R1089-1	. . COVER ASSEMBLY, Tip (used on 22R1180-7 and -8)	1	AU
		Attaching Parts		
-6	AN509-10R8	. . SCREW	6	AU
		———*———		
	22R1181-3	. . BONDED ASSEMBLY, Fwd (used on 22R1180-9)	1	AU
	22R1181-1	. . BONDED ASSEMBLY, Fwd (used on 22R1180-7)	1	AU
	22R1181-4	. . BONDED ASSEMBLY, Aft (used on 22R1180-10)	1	AU
	22R1181-2	. . BONDED ASSEMBLY, Aft (used on 22R1180-8)	1	AU
-7	22R1190-1	. . . BOX ASSEMBLY, Root	1	AU
-8	22R1318-1	. . . BOX ASSEMBLY, Basic	13	AU
-9	22R1320-1	. . . BOX ASSEMBLY, Tab	2	AU
-10	22R1329-1	. . . BOX ASSEMBLY, Tip (used on 22R1181-3 and -4)	1	AU
	22R1319-1	. . . BOX ASSEMBLY, Tip (used on 22R1181-1 and -2)	1	AU
-11	22R1182-3	. . . SPAR, Fwd (used on 22R1181-3)	1	AU
	22R1182-1	. . . SPAR, Fwd (used on 22R1181-1)	1	AU
	22R1182-4	. . . SPAR, Aft (used on 22R1181-4)	1	AU
	22R1182-2	. . . SPAR, Aft (used on 22R1181-2)	1	AU
-12	22R1332-1	. . BOLT (Used on 22R1180-9 and -10)	4	AU
-13	22R1132-1	. . PLATE, Lock	2	AU
-14	22R1106-1	. . WEIGHT, Tracking adjustment	AR	AU
	22R1105-1	. . STUD (Used on 22R1180-7 and -8)	4	AU
	AN365-524	. . NUT (Used on 22R1180-7 and -8)	4	AU
-15	22R1311-1	. . POCKET ASSEMBLY, Spanwise balance (used on 22R1180-9 and -10)	1	AU
-16	22R1300-1	. . RETAINER ASSEMBLY (Used on 22R1180-7 and -8)	1	AU
-17	22R1104-1	. . WEIGHT, Spanwise balance (used on 22R1180-7 and -8)	AR	AU
	22R1326-1	. . BOLT (Used on 22R1180-7 and -8)	4	AU
	AN363-428	. . NUT (Used on 22R1180-7 and -8)	4	AU
-18	22R1101-1	. . CONTAINER ASSEMBLY, Chordwise balance	1	AU

Rotor

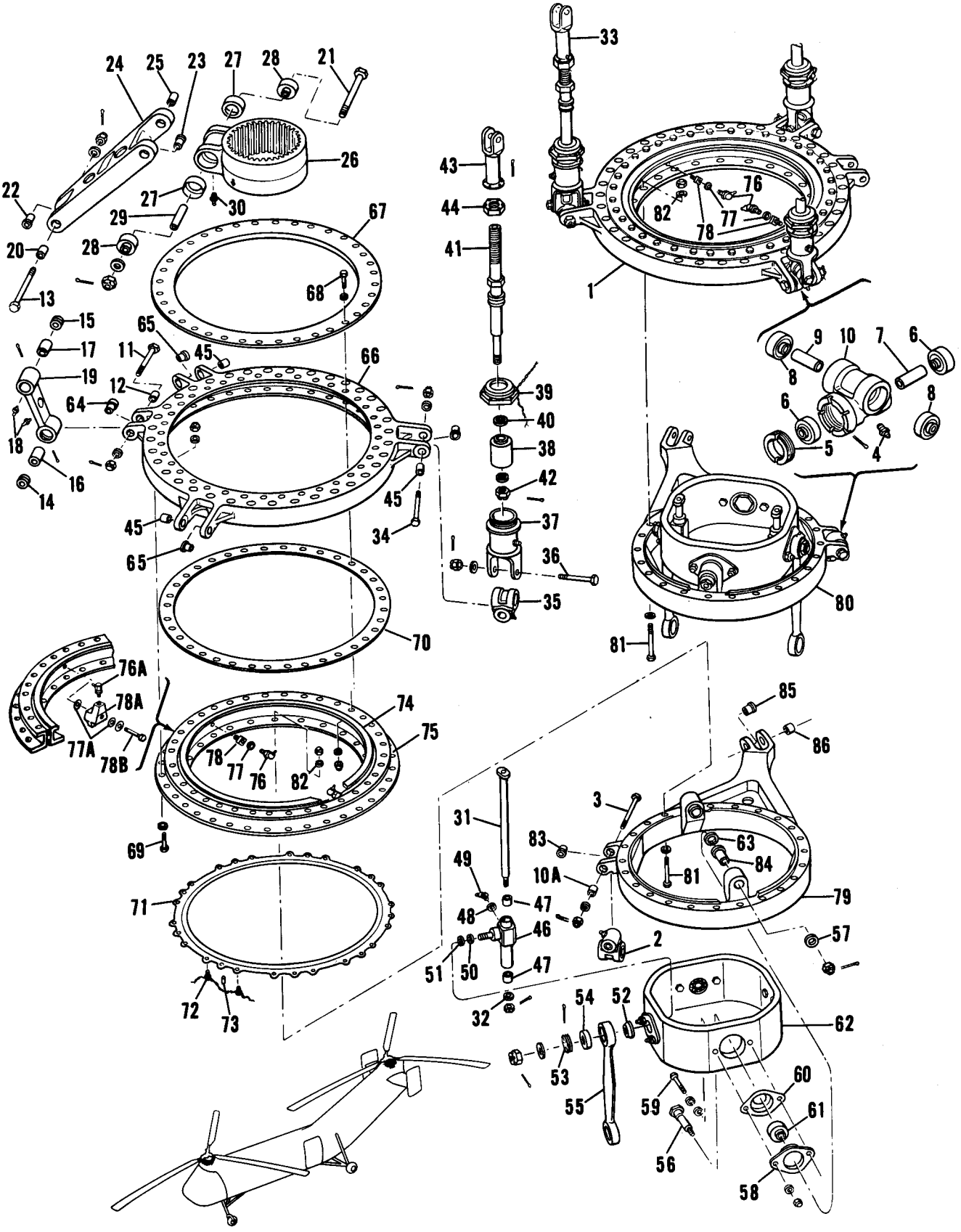

Figure 4. Rotor Controls

Figure and Index Number	Part Number	1 2 3 4 5 6 7 Description	Units per Assembly	Usable On Code
4-	22R3001-1	CONTROL INSTALLATION, Forward rotor	1	A,BP
	22R3001-5	CONTROL INSTALLATION, Forward rotor	1	BQ,C
	22R3001-7	CONTROL INSTALLATION, Forward rotor	1	D
-1	22R3002-1	CONTROL INSTALLATION, Aft rotor	1	A,BP
	22R3002-5	CONTROL INSTALLATION, Aft rotor	1	BQ,C
	22R3002-7	CONTROL INSTALLATION, Aft rotor	1	D
-2	22R3096-1	. BLOCK ASSEMBLY, Universal	1	
		Attaching Parts		
-3	AN176-27	. BOLT	1	
	AN381-3-12	. PIN, Cotter	1	
	AN310-6	. NUT	1	
	AN960D616L	. WASHER	1	
		———*———		
-4	MS15002-1	. . FITTING, Lubricator	1	
	AN381-2-7	. . PIN, Cotter	1	
-5	22R3106-1	. . NUT	1	
-6	AN201KP6A	. . BEARING	2	
-7	22R3107-4	. . SPACER	1	
	or			
	22R3107-2	. . SPACER	1	
-8	AN201KP5A	. . BEARING	2	
-9	22R3107-3	. . SPACER	1	
	or			
	22R3107-1	. . SPACER	1	
-10	22R3105-1	. . BLOCK, Universal	1	
-10A	22R3114-1	. BUSHING	1	
	22R3013-1	. SCISSORS INSTALLATION, Fwd rotor controls swash plate drive..	1	
	22R3013-2	. SCISSORS INSTALLATION, Aft rotor controls swash plate drive..	1	
	22R3013-3	. . SCISSORS ASSEMBLY, Forward	1	
	22R3013-4	. . SCISSORS ASSEMBLY, Aft	1	
		Attaching Parts		
-11	AN174-26	. . BOLT	1	
	AN381-2-8	. . PIN, Cotter	1	
	AN310-4	. . NUT	1	
	AN960D416	. . WASHER	1	
		———*———		
-12	22R3090-1	. . . BUSHING	1	
	22R3068-1	. . . LINK ASSEMBLY, Fwd controls drive scissors	1	
	22R3068-2	. . . LINK ASSEMBLY, Aft controls drive scissors	1	
		Attaching Parts		
-13	AN176-30	. . . BOLT	1	
	AN381-3-12	. . . PIN, Cotter	1	
	AN310-6	. . . NUT	1	
	AN960D616	. . . WASHER	1	
		———*———		
	AN381-2-6	. . . . PIN, Cotter	2	
-14	22R3056-1	. . . . NUT	1	
-15	22R3101-2	. . . . NUT	1	
-16	A41665	. . . . BEARING (SHA)	1	
-17	GDW6	. . . . BEARING (FAF)	1	
▌-18	MS15002-1	. . . . FITTING, Lubricator	2	
-19	22R3068-3	. . . . LINK, Fwd	1	
	22R3068-4	. . . . LINK, Aft	1	
-20	22R3089-1	. . . BUSHING	1	
	22R3050-1	. . . ARM ASSEMBLY, Fwd rotor controls drive scissors	1	
	22R3050-2	. . . ARM ASSEMBLY, Aft rotor controls drive scissors	1	
		Attaching Parts		
-21	22R3097-1	. . . BOLT	1	
	AN381-4-16	. . . PIN, Cotter	1	
	AN310-10	. . . NUT	1	
	AN960D1016	. . . WASHER	1	
		———*———		

Figure and Index Number	Part Number	Description 1 2 3 4 5 6 7	Units per Assembly	Usable On Code
4-22	22R3065-1	. . . . BUSHING	1	
-23	22R3064-1	. . . . BUSHING	1	
-24	22R3050-3	. . . . ARM	1	
-25	22R3066-1	. . . BUSHING	1	
	22R3052-1	. . . COLLAR ASSEMBLY, Rotor controls swash plate drive scissors	1	
-26	22R3052-4	. . . . COLLAR	1	
	or			
	22R3052-2	. . . . COLLAR SUBASSEMBLY	1	
	22R3052-3	. . . . . COLLAR (Used with 22R3052-2)	1	
-27	22R3057-1	. . . . . LINER (Used with 22R3052-2)	2	
-28	AN201KP10A	. . . . BEARING	2	
-29	22R3063-1	. . . . SPACER	1	
-30	MS15002-1	. . . . FITTING, Lubricator	1	
-31	22R3041-2	. BOLT, Guide	2	
		Attaching Parts		
	AN381-3-12	. PIN, Cotter	2	
	AN320-8	. NUT	2	
-32	22R3147-1	. WASHER	2	
		———*———		
	22R3001-2	. CONTROL ASSEMBLY, Fwd rotor	1	J
	22R3001-4	. CONTROL ASSEMBLY, Fwd rotor	1	DP
	22R3001-6	. CONTROL ASSEMBLY, Fwd rotor	1	DQ
	22R3002-2	. CONTROL ASSEMBLY, Aft rotor	1	J
	22R3002-4	. CONTROL ASSEMBLY, Aft rotor	1	DP
	22R3002-6	. CONTROL ASSEMBLY, Aft rotor	1	DQ
-33	22R3015-2	. . LINK ASSEMBLY, Rotor pitch	3	
	or			
	22R3015-1	. . LINK ASSEMBLY, Rotor pitch	3	
		Attaching Parts		
-34	AN176-27	. . BOLT	1	
	AN381-3-12	. . PIN, Cotter	1	
	AN310-6	. . NUT	1	
	AN960D616L	. . WASHER	1	
		———*———		
-35	22R3096-1	. . . BLOCK ASSEMBLY, Universal (used with 22R3015-1)	1	
	22R3096-2	. . . BLOCK ASSEMBLY, Universal (used with 22R3015-2)	1	
		Attaching Parts		
-36	AN175C21	. . . BOLT (Used with 22R3015-1)	1	
	AN175C22	. . . BOLT (Used with 22R3015-2)	1	
	AN381-2-8	. . . PIN, Cotter	1	
	AN310-5	. . . NUT	1	
	AN960-516L	. . . WASHER	1	
		———*———		
-37	22R3079-1	. . . HOUSING (Used with 22R3015-1)	1	
	22R3079-2	. . . HOUSING (Used with 22R3015-2)	1	
-38	DW8	. . . BEARING (FAF)	1	
		Attaching Parts		
-39	22R3082-1	. . . NUT	1	
-40	22R3099-1	. . . WASHER	1	
	AN995C41	. . . WIRE, Lock	AR	
		———*———		
-41	22R3080-1	. . . SHAFT	1	
		Attaching Parts		
-42	22R3139-1	. . . NUT	1	
	AN381-3-12	. . . PIN, Cotter	1	
	AN960-816	. . . WASHER	1	
		———*———		
-43	22R3081-1	. . . TERMINAL	1	
		Attaching Parts		
-44	22R3083-1	. . . NUT	1	
	AN381-2-12	. . . PIN, Cotter	1	
		———*———		
-45	22R3114-1	. . BUSHING	3	

Figure and Index Number	Part Number	Description 1 2 3 4 5 6 7	Units per Assembly	Usable On Code
4-	22R3011-3	. . SWASH PLATE ASSEMBLY, Fwd rotor controls	1	J,DP
	22R3011-5	. . SWASH PLATE ASSEMBLY, Fwd rotor controls	1	DQ
	22R3011-4	. . SWASH PLATE ASSEMBLY, Aft rotor controls	1	J,DP
	22R3011-6	. . SWASH PLATE ASSEMBLY, Aft rotor controls	1	DQ
	22R3043-1	. . . TRUNNION ASSEMBLY, LH	1	
	22R3043-2	. . . TRUNNION ASSEMBLY, RH	1	
-46	22R3043-7	. . . . BLOCK, LH	1	
	or			
	22R3043-3	. . . . BLOCK, LH	1	
	22R3043-8	. . . . BLOCK, RH	1	
	or			
	22R3043-4	. . . . BLOCK, RH	1	
-47	22R3043-5	. . . . BUSHING	2	
-48	22R3118-1	. . . . GASKET (Under lubricator fitting)	AR	
■ -49	MS15002-3	. . . . FITTING, Lubricator	1	
-50	22R3098-2	. . . SPACER	2	
▌ -51	22R3119-2	. . . SHIM	2	
	or			
	22R3119-1	. . . SHIM	2	
▌	22R3119-3	. . . SHIM	2	
-52	22R3095-1	. . . WASHER	2	
	22R3116-1	. . . LINK ASSEMBLY	2	
		Attaching Parts		
	AN320-4	. . . NUT	1	
	AN381-2-8	. . . PIN, Cotter	1	
	AN960-416	. . . WASHER	1	
		———*———		
	AN381-2-6	. . . . PIN, Cotter	2	
-53	22R3106-1	. . . . NUT	2	
-54	KS6A	. . . . BEARING (FAF)	2	
-55	22R3116-2	. . . . LINK	1	
	22R3017-1	. . . RING ASSEMBLY, Gimbal	1	
		Attaching Parts		
-56	22R3072-1	. . . BOLT	2	
	AN381-2-8	. . . PIN, Cotter	2	
	AN310-5	. . . NUT	2	
-57	22R3111-1	. . . WASHER	2	
		———*———		
-58	22R3085-1	. . . . RETAINER	4	
		Attaching Parts		
-59	AN3-11A	. . . . BOLT	2	
	AN365-1032	. . . . NUT	2	
	AN960-10	. . . . WASHER	4	
	AN960D10L	. . . . WASHER	2	
		———*———		
-60	22R3084-1	. . . . BUSHING	4	
-61	AN201KP12A	. . . . BEARING	4	
-62	22R3046-1	. . . . RING	1	
-63	22R3098-3	. . . SPACER	2	
	or			
	22R3098-1	. . . SPACER (Used with 22R3110-1)	2	J,DP
	22R3070-3	. . . RING ASSEMBLY, Rotor control swash plate upper	1	
	or			
	22R3070-1	. . . RING ASSEMBLY, Rotor control swash plate upper	1	
-64	22R3102-1	. . . . BUSHING	1	
-65	22R3103-1	. . . . BUSHING	3	
-66	22R3070-5	. . . . RING (Used with 22R3070-3)	1	
	or			
	22R3070-4	. . . . RING (Used with 22R3070-3)	1	
	22R3070-2	. . . . RING (Used with 22R3070-1)	1	
-67	22R3053-1	. . . RAINSHIELD	1	
		Attaching Parts		
-68	NAS464-3A-6	. . . BOLT	36	J,D
	NAS464-3A-7	. . . BOLT	36	C

Figure and Index Number	Part Number	Description (1 2 3 4 5 6 7)	Units per Assembly	Usable On Code
4-	AN364-1032	. . . NUT	36	
	AN960-10	. . . WASHER	36	
	AN960D10L	. . . WASHER	36	
		———*———		
	22R3014-11	. . . BEARING ASSEMBLY, Rotor control swash plate	1	
		Attaching Parts		
-69	NAS464-3A-4	. . . BOLT	36	J,DE
	NAS464-3A-5	. . . BOLT	36	DF
	AN364-1032	. . . NUT	36	
	AN960D10	. . . WASHER	36	
		———*———		
-70	22R3014-7	. . . . SHIELD, Upper grease	1	
-71	22R3014-5	. . . . SHIELD, Lower grease	1	
		Attaching Parts		
-72	AN500A6-3	. . . . SCREW	18	
-73	22R3014-6	. . . . PIN, Dowel	9	
	AN995C41	. . . . WIRE, Lock	AR	
	or			
	AN995NC32	. . . . WIRE, Lock	AR	
		———*———		
-74	22R3014-2	. . . . RACE, Inner	1	
-75	22R3014-3	. . . . RACE, Outer	1	
	22R3014-8	. . . . CAGE, Wire	1	
	22R3014-4	. . . . BEARING, Ball	AR	
-76	MS15002-3	. . . FITTING, Lubricator	2	J,EM
-76A	MS15001-4	. . . FITTING, Lubricator	2	EH,EI
-77	22R3118-1	. . . GASKET	2	J,EM
-77A	22R3153-2	. . . SEAL	4	EH,EI
-78	22R3143-1	. . . EXTENSION	2	J,EM
-78A	22R3155-2	. . . EXTENSION	2	EH,EI
	or			
	22R3155-1	. . . EXTENSION	2	EH,EI
		Attaching Parts		
-78B	22R3156-1	. . . BOLT	1	EH,EI
	22R3152-1	. . . WASHER, Lock	1	EH,EI
		———*———		
-79	22R3048-9	. . . RING ASSEMBLY, Fwd rotor control swash plate lower	1	
	or			
	22R3048-1	. . . RING ASSEMBLY, Fwd rotor control swash plate lower	1	
-80	22R3048-10	. . . RING ASSEMBLY, Aft rotor control swash plate lower	1	
	or			
	22R3048-2	. . . RING ASSEMBLY, Aft rotor control swash plate lower	1	
		Attaching Parts		
-81	NAS464-3A-23	. . . BOLT	24	
	AN365-1032	. . . NUT	24	
-82	15R3202-1	. . . WASHER	24	
	AN960D10L	. . . WASHER	24	
		———*———		
-83	22R3103-1	. . . . BUSHING	1	
-84	22R3110-1	. . . . BUSHING (Used with 22R3098-1)*	2	J,DP
-85	22R3112-1	. . . . BUSHING	1	
-86	22R3113-1	. BUSHING	1	

*For special bushing replacement refer to T.O. 1H-21(Y)-3.

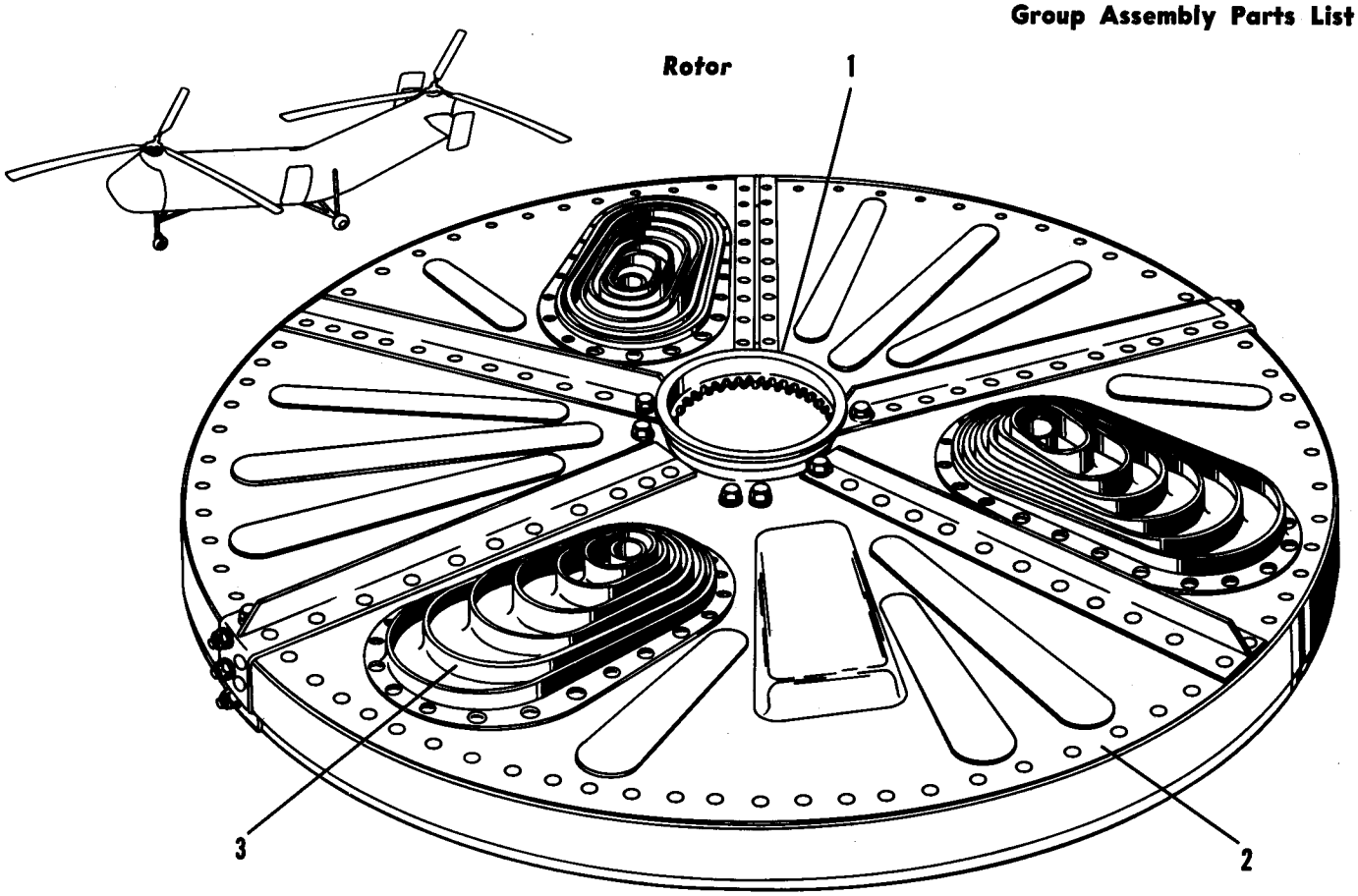

Figure 5. Rainshield

Figure and Index Number	Part Number	Description 1 2 3 4 5 6 7	Units per Assembly	Usable On Code
5-	22R6001-1	RAINSHIELD INSTALLATION, Rotor hub	1	
	22R6001-2	. RAINSHIELD ASSEMBLY, Rotor hub	1	
-1	22R2099-1	. . COLLAR	1	
	22R6048-1	. . GASKET	1	
-2	22R6001-3	. . RAINSHIELD SUBASSEMBLY	1	
		Attaching Parts		
	AN4H3A	. . BOLT	12	
	AN960D416	. . WASHER	12	
	AN995C41	. . WIRE, Lock	AR	
		———*———		
	22R6010-1	. . . RAINSHIELD	1	
	22R6010-2	. . . RAINSHIELD	1	
		Attaching Parts		
	AN3-3A	. . . BOLT	12	
	AN364-1032	. . . NUT	6	
	AN525-10-6	. . . SCREW	6	
	AN960D10L	. . . WASHER	18	
		———*———		
-3	22R6046-1	. . . BOOT	3	J,AV
	22R6053-1	. . . BOOT	3	I
	22R6047-1	. . . RING	3	
		Attaching Parts		
	AN525-10-9	. . . SCREW	48	
	AN960D10L	. . . WASHER	48	
		———*———		

Tail

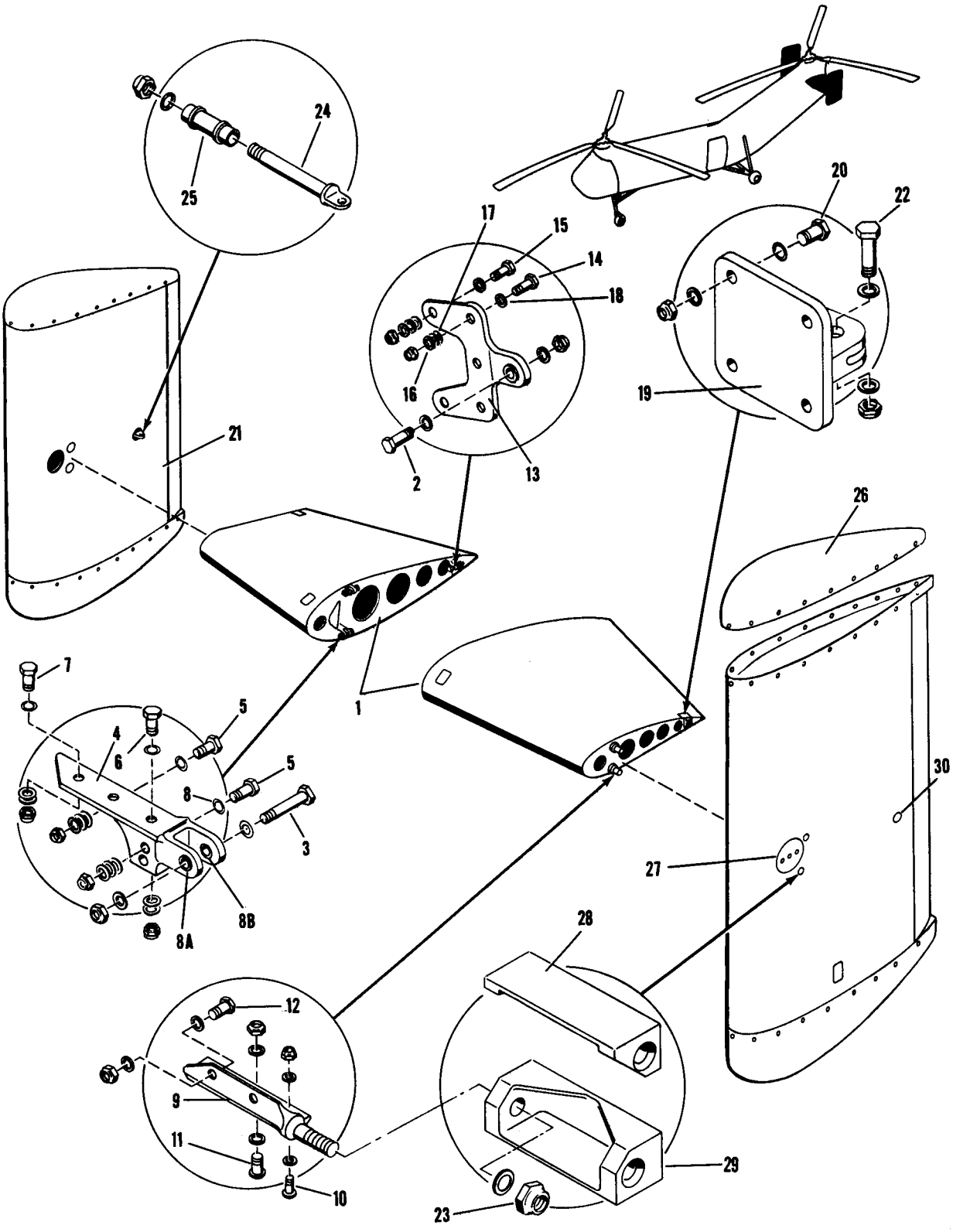

Figure 6. Tail Section

Figure and Index Number	Part Number	Description 1 2 3 4 5 6 7	Units per Assembly	Usable On Code
6-	22T0001-1	TAIL INSTALLATION	1	
	22T3001-1	. STABILIZER INSTALLATION	2	
-1	22T3001-104	. . STABILIZER ASSEMBLY	1	
	or			
	22T3001-103	. . STABILIZER ASSEMBLY	1	
	or			
	22T3001-102	. . STABILIZER ASSEMBLY (Olive drab finish)	1	
	or			
	22T3001-2	. . STABILIZER ASSEMBLY	1	
		Attaching Parts		
-2	AN174C10A	. . BOLT	1	
-3	AN177C16A	. . BOLT	2	
	AN364-428	. . NUT	1	
	AN364-720	. . NUT	2	
	AN960-416	. . WASHER	2	
	AN960-716	. . WASHER	4	
	AN960-716L	. . WASHER	2	
		———*———		
	22T3001-11	. . . SEAL, Nose section (stub end)	1	
	22T3001-12	. . . SEAL, Center section (stub end)	2	
	22T3001-13	. . . SEAL, Trailing section (stub end)	1	
	22T3001-14	. . . SEAL, Trailing section (stub end)	1	
	22T3001-18	. . . SEAL, Nose section (fin end)	1	
	22T3001-17	. . . SEAL, Center section (fin end)	2	
	22T3001-16	. . . SEAL, Trailing section (fin end)	1	
	22T3001-15	. . . SEAL, Trailing section (fin end)	1	
	22T3002-13	. . . SPAR ASSEMBLY, Stabilizer forward	1	
	or			
	22T3002-1	. . . SPAR ASSEMBLY, Stabilizer forward	1	
-4	22T3074-1	. . . . FITTING ASSEMBLY, Stabilizer spar root upper	1	
	22T3074-2	. . . . FITTING ASSEMBLY, Stabilizer spar root lower	1	
		Attaching Parts		
-5	AN175-7A	. . . . BOLT	4	
-6	AN175-10A	. . . . BOLT	4	
-7	AN175-11A	. . . . BOLT	2	
	AN365-524	. . . . NUT	10	
	AN960D516	. . . . WASHER	20	
-8	AN960D516L	. . . . WASHER	20	
		———*———		
-8A	NAS77-7-36	. . . . . BUSHING	1	
-8B	NAS75-7-011	. . . . . BUSHING	1	
-9	42T3068-3	. . . . FITTING, Stabilizer to fin upper	1	
	or			
	42T3068-1	. . . . FITTING, Stabilizer to fin upper	1	
	or			
	22T3052-3	. . . . FITTING, Stabilizer to fin upper	1	
	or			
	22T3052-1	. . . . FITTING, Stabilizer to fin upper	1	
	42T3068-4	. . . . FITTING, Stabilizer to fin lower	1	
	or			
	42T3068-2	. . . . FITTING, Stabilizer to fin lower	1	
	or			
	22T3052-4	. . . . FITTING, Stabilizer to fin lower	1	
	or			
	22T3052-2	. . . . FITTING, Stabilizer to fin lower	1	
		Attaching Parts		
-10	AN23-10A	. . . . BOLT (Used with 22T3052-1, -2, -3, and -4)	1	
	AN23-12A	. . . . BOLT (Used with 42T3068-1, -2, -3, and -4)	1	
-11	AN24-10A	. . . . BOLT (Used with 22T3052-1, -2, -3, and -4)	2	
	AN24-12A	. . . . BOLT (Used with 42T3068-1, -2, -3, and -4)	2	
-12	AN4-6A	. . . . BOLT (Used with 22T3052-1, -2, -3, and -4)	2	
	AN4-7A	. . . . BOLT (Used with 42T3068-1, -2, -3, and -4)	2	
	AN364-1032	. . . . NUT	1	
	AN364-428	. . . . NUT (Used with 42T3068-1, -2, -3, and -4)	4	
	AN960D10	. . . . WASHER (Used with 22T3052-1, -2, -3, and -4)	1	
	AN960D10	. . . . WASHER (Used with 42T3068-1, -2, -3, and -4)	2	

Figure and Index Number	Part Number	Description 1 2 3 4 5 6 7	Units per Assembly	Usable On Code
6-	AN960D10L	. . . . WASHER	1	
	AN960D416	. . . . WASHER (Used with 22T3052-1, -2, -3, and -4)	4	
	AN960D416	. . . . WASHER (Used with 42T3068-1, -2, -3, and -4)	7	
	AN960D416L	. . . . WASHER (Used with 42T3068-1, -2, -3, and -4)	2	
		———*———		
	22T3006-1	. . . SPAR ASSEMBLY, Stabilizer aft	1	
-13	22T3077-1	. . . . FITTING ASSEMBLY, Stabilizer to stub	1	
		Attaching Parts		
-14	AN173-6A	. . . . BOLT	3	
-15	AN173-5A	. . . . BOLT	2	
	AN365-1032	. . . . NUT	5	
-16	AN960-10	. . . . WASHER	12	
-17	AN960D10L	. . . . WASHER	3	
-18	AN960D10	. . . . WASHER	3	
		———*———		
	NAS75-4-008	. . . . . BUSHING	1	
-19	22T3071-3	. . . . FITTING ASSEMBLY, Stabilizer to fin	1	
	or			
	22T3071-2	. . . . FITTING ASSEMBLY, Stabilizer to fin	1	
		Attaching Parts		
-20	AN173-5A	. . . . BOLT	4	
	AN365-1032	. . . . NUT	4	
	AN960-10	. . . . WASHER	8	
	AN960D10L	. . . . WASHER	4	
		———*———		
	22T3001-23	. . . PLATE, Cover	2	
	22T3001-24	. . . PLATE, Cover	2	
		Attaching Parts		
	AN500A8-5	. . . SCREW	4	
	C8104-832-1	. . . NUT (TIN)	4	
	AN960D8	. . . WASHER	8	
	AN995CU20	. . . WIRE, Lock	AR	
		———*———		
	22T1001-1	. FIN INSTALLATION	2	G
	42T1001-1	. FIN INSTALLATION	2	X,AU
-21	22T1001-2	. . FIN ASSEMBLY	1	G
	42T1001-2	. . FIN ASSEMBLY	1	X,EI
	42T1001-102	. . FIN ASSEMBLY	1	C,CW
		Attaching Parts		
-22	NAS464-4A7	. . BOLT	1	
-23	EB-080	. . NUT (EN)	1	
	AN364-428	. . NUT	2	
	AN960-416	. . WASHER (Under nut)	2	
	AN960-416L	. . WASHER (Under bolt hd)	1	
	AN960D816	. . WASHER	2	
		———*———		
-24	22T1052-2	. . . BOLT	1	
	AN365-428	. . . NUT	1	
	AN960D416	. . . WASHER	1	
-25	22T3072-1	. . . SPACER	1	
-26	22T1001-10	. . . TIP	2	
		Attaching Parts		
	AN526-832R8	. . . SCREW	36	
	AN960D8L	. . . WASHER	36	
		———*———		
-27	22T1001-20	. . . COVER ASSEMBLY	1	
-28	22T1051-2	. . . FITTING ASSEMBLY	1	
	or			
	22T1051-1	. . . FITTING ASSEMBLY	1	
		Attaching Parts		
	ALP509-H-E8-3	. . . LOCKBOLT (HKM)	4	G
	ALPP-H-E8-3	. . . LOCKBOLT (HKM)	2	X,AU

Figure and Index Number	Part Number	1 2 3 4 5 6 7 Description	Units per Assembly	Usable On Code
6-	ALP509-H-E8-3	. . . LOCKBOLT (HKM)	2	X,AU
	LC-F8	. . . LOCKCOLLAR (HKM)	4	X,AU
	NAS221-11	. . . SCREW	12	X,AU
	AN365-1032	. . . NUT	12	X,AU
	AN960D10	. . . WASHER	12	X,AU
	AN960D10L	. . . WASHER	12	X,AU
		———*———		
-29	22T1058-2	. . . FITTING ASSEMBLY	1	
	or			
	22T1058-1	. . . FITTING ASSEMBLY	1	
		Attaching Parts		
	ALP509-H-E8-3	. . . LOCKBOLT (HKM)	4	G
	ALPP-H-E8-3	. . . LOCKBOLT (HKM)	4	X,AU
	LC-F8	. . . LOCKCOLLAR (HKM)	4	X,AU
	NAS221-11	. . . SCREW	12	X,AU
	AN365-1032	. . . NUT	12	X,AU
	AN960D10	. . . WASHER	12	X,AU
	AN960D10L	. . . WASHER	12	X,AU
		———*———		
-30	NAS451-18	. . BUTTON, Plug (outboard side only)	1	

Tail

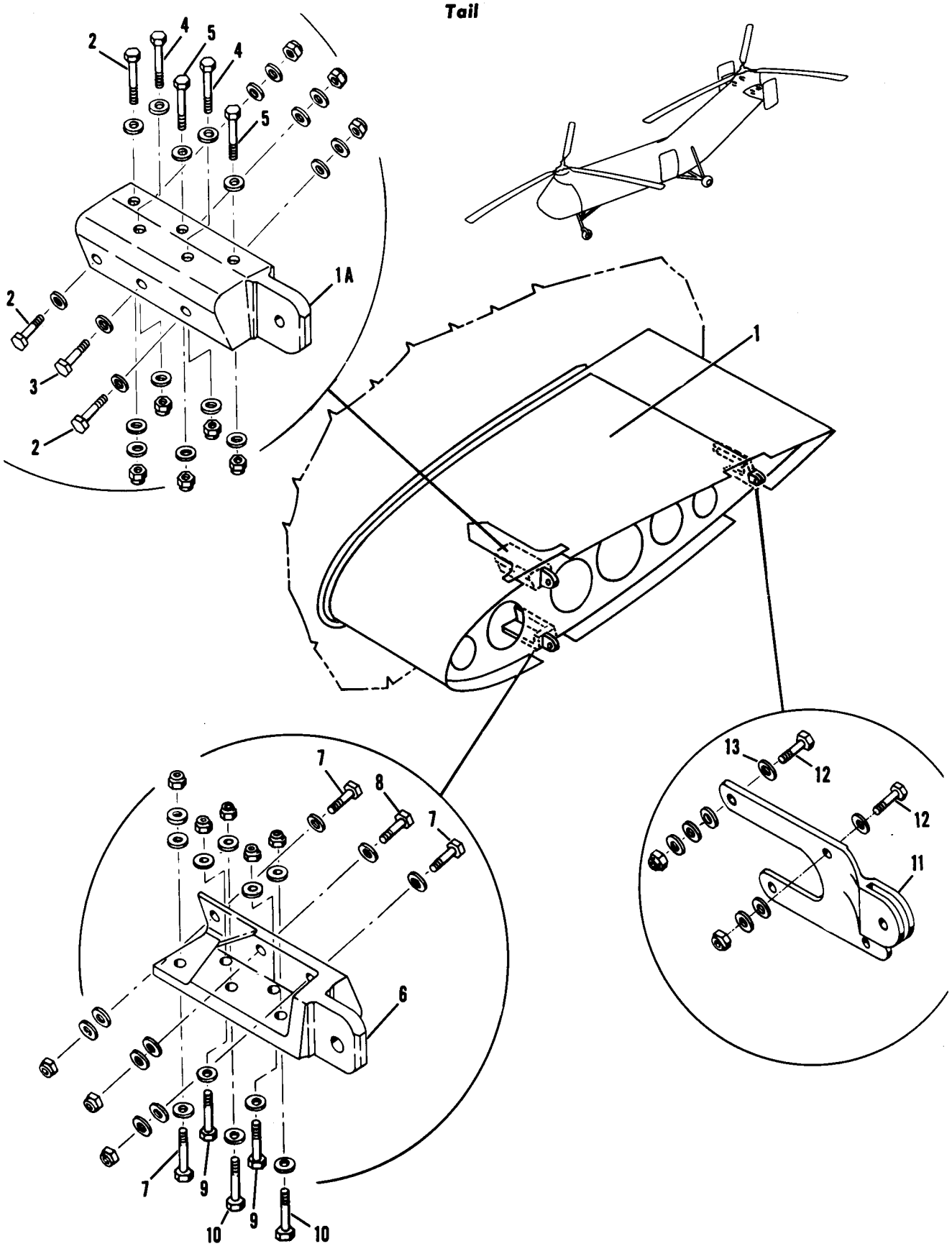

Figure 6A. Stub Stabilizer and Attachment Fittings

Figure and Index Number	Part Number	Description 1 2 3 4 5 6 7	Units per Assembly	Usable On Code
6A-1	22T3003-1	STUB STABILIZER INSTALLATION	1	J
	42T3003-1	STUB STABILIZER INSTALLATION	1	AU
	22T3005-1	. SPAR ASSEMBLY, Fwd stub stabilizer	1	J
	42T3005-23	. SPAR ASSEMBLY, Fwd stub stabilizer LH	1	AU
	or			
	42T3005-1	. SPAR ASSEMBLY, Fwd stub stabilizer LH	1	AU
	42T3005-24	. SPAR ASSEMBLY, Fwd stub stabilizer RH	1	AU
	or			
	42T3005-2	. SPAR ASSEMBLY, Fwd stub stabilizer RH	1	AU
-1A	22T3075-3	. . FITTING, Stabilizer stub upper LH	1	
	or			
	22T3075-1	. . FITTING, Stabilizer stub upper LH	1	
	22T3075-4	. . FITTING, Stabilizer stub upper RH	1	
	or			
	22T3075-2	. . FITTING, Stabilizer stub upper RH	1	
		Attaching Parts		
-2	AN175-7A	. . BOLT	4	
-3	AN175-6A	. . BOLT (Used with 22T3075-1 and -2)	1	
-4	AN175-10A	. . BOLT	2	
-5	AN174-10A	. . BOLT	2	
	AN365-524	. . NUT	6	
	AN365-428	. . NUT	2	
	AN960-516	. . WASHER	10	
	AN960-516L	. . WASHER	4	
	AN960D516	. . WASHER	1	
	AN960D516L	. . WASHER	1	
	AN960-416	. . WASHER	2	
	AN960-416L	. . WASHER	2	
		———*———		
-6	22T3076-3	. . FITTING, Stabilizer stub lower LH	1	
	or			
	22T3076-1	. . FITTING, Stabilizer stub lower LH	1	
	22T3076-4	. . FITTING, Stabilizer stub lower RH	1	
	or			
	22T3076-2	. . FITTING, Stabilizer stub lower RH	1	
		Attaching Parts		
-7	AN175-7A	. . BOLT	4	
-8	AN175-6A	. . BOLT (Used with 22T3076-1 and -2)	1	
-9	AN175-10A	. . BOLT	2	
-10	AN174-10A	. . BOLT	2	
	AN365-524	. . NUT	6	
	AN365-428	. . NUT	2	
	AN960-516	. . WASHER	10	
	AN960-516L	. . WASHER	4	
	AN960D516	. . WASHER	1	
	AN960D516L	. . WASHER	1	
	AN960-416	. . WASHER	2	
	AN960-416L	. . WASHER	2	
		———*———		
	22T3004-1	. SPAR ASSEMBLY, Aft stub stabilizer	1	J
	42T3004-1	. SPAR ASSEMBLY, Aft stub stabilizer	1	AU
-11	22T3078-3	. . FITTING, Stabilizer stub LH	1	
	or			
	22T3078-1	. . FITTING, Stabilizer stub LH	1	
	22T3078-4	. . FITTING, Stabilizer stub RH	1	
	or			
	22T3078-2	. . FITTING, Stabilizer stub RH	1	
		Attaching Parts		
-12	AN174-6A	. . BOLT	4	
	AN365-428	. . NUT	4	
	AN960-416	. . WASHER	12	
-13	AN960D416L	. . WASHER	2	
		———*———		
	22T3003-47	. SEAL, Trailing section	1	J
	22T3003-48	. SEAL, Trailing section	1	J
	42T3003-35	. SEAL, Nose section	1	AU

Structure

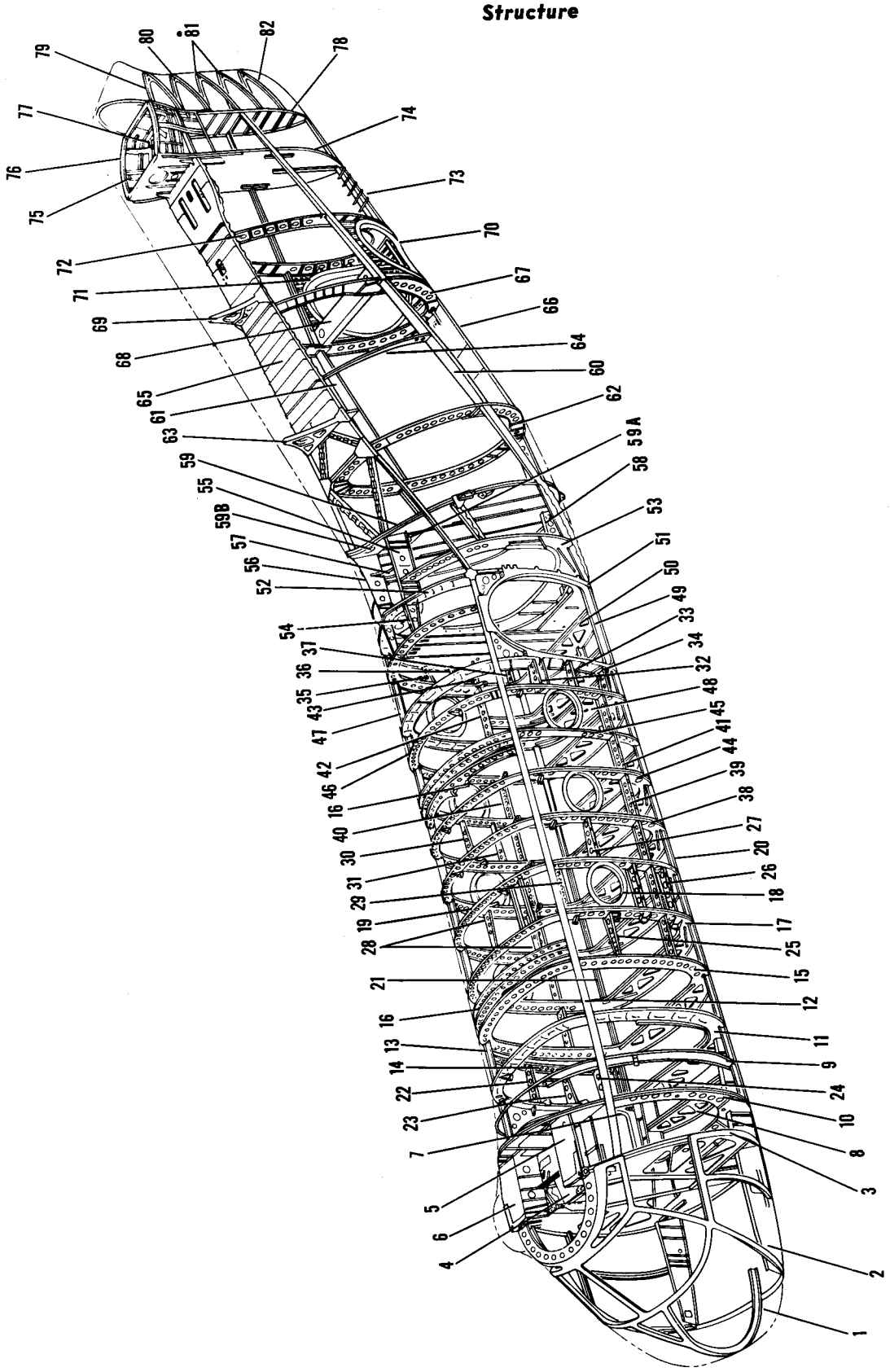

Figure 7. Fuselage, YH-21 and H-21A

Figure and Index Number	Part Number	Description 1 2 3 4 5 6 7	Units per Assembly	Usable On Code
7-	22S0001-1	STRUCTURE ASSEMBLY, Fuselage	1	J
-1	22S8002-1	. ENCLOSURE INSTALLATION, Nose, see fig. 17	Ref	J
-2	22S7039-1	. BEAM ASSEMBLY, Cockpit support LH	1	J
	22S7031-1	. BEAM ASSEMBLY, Cockpit support RH	1	J
-3	22S7001-1	. BULKHEAD INSTALLATION, Fwd transmission support sta 97.360	1	J
	22S7001-2	. . BULKHEAD ASSEMBLY, Fwd transmission support	1	J
	22S5001-1	. SUPPORT INSTALLATION, Fwd transmission	1	J
-4	22S5040-1	. . DECK INSTALLATION, Fwd transmission	1	J
	22S5040-2	. . . DECK ASSEMBLY, Fwd transmission	1	J,AV
-5	22S5063-1	. . SHELF INSTALLATION, Fwd transmission support LH	1	J,AV
-6	22S5063-2	. . SHELF INSTALLATION, Fwd transmission support RH	1	J
	22S5063-3	. . . SHELF ASSEMBLY, LH	1	J,AV
	22S5063-4	. . . SHELF ASSEMBLY, RH	1	J
-7	22S7051-1	. JAMB INSTALLATION, Rescue door	1	J
-8	22S7020-1	. FRAME INSTALLATION, Floor sta 139.500	1	J
	22S7020-3	. . FRAME ASSEMBLY	1	J
-9	22S7067-1	. SUPPORT INSTALLATION, Insulation sta 139.500	1	L
	22S7067-2	. . SUPPORT ASSEMBLY, Insulation	1	L
-10	22S7002-1	. FRAME INSTALLATION, Sta 119.500	1	J
	22S7002-2	. . FRAME ASSEMBLY	1	J
	42S8005-1	. SCUPPER INSTALLATION	1	GW
	42S8005-7	. . SCUPPER	1	GW
-11	22S7003-1	. FRAME INSTALLATION, Sta 159.500	1	J
	22S7003-3	. . FRAME ASSEMBLY	1	J
-12	22S7042-1	. LONGERON, Upper forward LH	1	J
-13	22S7042-2	. LONGERON, Upper forward RH	1	J
-14	22S7036-1	. FORMER INSTALLATION, RH sta 174.500	1	J
	22S7036-3	. . FORMER	1	J
-15	22S7037-1	. FRAME INSTALLATION, Sta 179.500	1	J
	22S7037-3	. . FRAME ASSEMBLY	1	J
-16	22S5004-1	. SUPPORT INSTALLATION, Bearing sta 190.895 and sta 276.742	2	J,AV
	22S5004-2	. . SUPPORT ASSEMBLY	1	J,AV
-17	22S7004-1	. FRAME INSTALLATION, Sta 199.500	1	J
	22S7004-3	. . FRAME ASSEMBLY	1	J
-18	22S8011-1	. WINDOW INSTALLATION, Cabin LH, see fig. 17	Ref	
-19	22S7005-1	. FRAME INSTALLATION, Sta 219.500	1	J
	22S7005-3	. . FRAME ASSEMBLY	1	J
-20	22S7040-1	. LONGERON, Lower forward LH	1	J
-21	22S7040-2	. LONGERON, Lower forward RH	1	J
	22S4012-1	. SUPPORTS INSTALLATION, Litter, see fig. 89	Ref	J
	22S4089-1	. . SUPPORTS INSTALLATION, Litter LH, see fig. 89	Ref	J
	22S4012-2	. . SUPPORTS INSTALLATION, Litter RH, see fig. 89	Ref	J
-22	22S4012-3	. . . INTERCOSTAL, RH sta 159.500 to sta 174.500	1	J
-23	22S4012-5	. . . INTERCOSTAL, RH sta 159.500 to sta 174.500	1	J
-24	22S4012-7	. . . INTERCOSTAL, RH sta 159.500 to sta 174.500	1	J
-25	22S4012-10	. . . INTERCOSTAL, LH sta 179.500 to sta 199.500	1	J
-26	22S4012-12	. . . INTERCOSTAL, LH sta 199.500 to sta 219.500	2	J
-27	22S4012-16	. . . INTERCOSTAL, LH sta 219.500 to sta 239.500	1	J
-28	22S4012-9	. . . INTERCOSTAL, RH sta 219.500 to sta 239.500	2	J
-29	22S4012-11	. . . INTERCOSTAL, RH sta 239.500 to sta 259.500	1	J
-30	22S4012-13	. . . INTERCOSTAL, RH sta 259.500 to sta 279.500	1	J
-31	22S4012-15	. . . INTERCOSTAL, RH sta 259.500 to sta 279.500	1	J
-32	22S4089-7	. . . INTERCOSTAL, LH sta 299.500 to sta 311.810	1	J
-33	22S4089-5	. . . INTERCOSTAL, LH sta 299.500 to sta 311.810	1	J
-34	22S4089-3	. . . INTERCOSTAL, LH sta 299.500 to sta 311.810	1	J
-35	22S4012-17	. . . INTERCOSTAL, RH sta 339.500 to sta 359.500	1	J
-36	22S4012-19	. . . INTERCOSTAL, RH sta 339.500 to sta 359.500	1	J
-37	22S4012-21	. . . INTERCOSTAL, RH sta 339.500 to sta 359.500	1	J
-38	22S7022-1	. FRAME INSTALLATION, Sta 239.500	1	J
	22S7022-3	. . FRAME ASSEMBLY	1	J
	22S4011-21	. SUPPORT INSTALLATION, Troop seats	1	J

Figure and Index Number	Part Number	Description 1 2 3 4 5 6 7	Units per Assembly	Usable On Code
7-39	22S4011-3	. . INTERCOSTAL, LH sta 179.500 to sta 259.500	4	J
-40	22S4011-4	. . INTERCOSTAL, RH sta 179.500 to sta 299.500	6	J
-41	22S4011-23	. . INTERCOSTAL, LH sta 259.500 to sta 299.500	2	J
-42	22S4011-9	. . INTERCOSTAL, RH sta 311.810 to sta 339.500	1	J
-43	22S4011-11	. . INTERCOSTAL, RH sta 339.500 to sta 359.975	1	J
	22S4075-1	. . FITTING, Troop seat tube support	16	J
	22S4075-3	. . FITTING, Troop seat tube support	9	J
	22S4076-1	. . FITTING, Troop seat tube support sta 311.810	1	J
	22S4077-1	. . COLLAR, Troop seat tube support sta 395.975	1	J
-44	22S7006-1	. FRAME INSTALLATION, Sta 259.500	1	J
	22S7006-3	. . FRAME ASSEMBLY	1	J
-45	22S7038-1	. FRAME INSTALLATION, Sta 279.500	1	J
	22S7038-3	. . FRAME ASSEMBLY	1	J
-46	22S7007-1	. FRAME INSTALLATION, Sta 299.500	1	J
	22S7007-3	. . FRAME ASSEMBLY	1	J
-47	22S7008-1	. FRAME INSTALLATION, Sta 311.810	1	J
	22S7008-3	. . FRAME ASSEMBLY	1	J
	22S4080-1	. TIE-DOWN INSTALLATION, Outboard cargo	1	J
	22S4080-2	. TIE-DOWN INSTALLATION, Outboard cargo	1	J
-48	22S7024-1	. FRAME INSTALLATION, Floor sta 319.500	1	J
	22S7024-3	. . FRAME ASSEMBLY ..	1	J
-49	22S7025-1	. BEAM ASSEMBLY	1	J
-50	22S7009-1	. FRAME INSTALLATION, Sta 339.500	1	J
	22S7009-3	. . FRAME ASSEMBLY	1	J
-51	22S7050-1	. JAMB INSTALLATION, Cabin entrance door	1	J
-52	22S7010-1	. FRAME INSTALLATION, Canted sta 359.975	1	J
	22S7010-2	. . FRAME ASSEMBLY	1	J
-53	22S7011-1	. FRAME INSTALLATION, Canted sta 377.560	1	L
-54	22S5084-1	. BEAM INSTALLATION, Fwd LH	1	L
	22S5084-2	. BEAM INSTALLATION, Fwd RH	1	A
	22S5002-1	. SUPPORT INSTALLATION, Central transmission	1	P
	22S5002-65	. SUPPORT INSTALLATION, Central transmission	1	L
	22S5082-1	. SUPPORT INSTALLATION, Central transmission	1	A,P
-55	22S5002-3	. . BEAM ASSEMBLY, LH	1	L
	22S5082-3	. . BEAM ASSEMBLY, LH	1	A,P
-56	22S5002-4	. . BEAM ASSEMBLY, RH	1	L
	22S5082-4	. . BEAM ASSEMBLY, RH	1	A
-57	22S5070-1	. . SUPPORT INSTALLATION, Central transmission	1	E
■	42S5070-1	. . SUPPORT INSTALLATION, Central transmission	1	J
-58	22S7046-1	. LONGERON INSTALLATION, Fwd keel sta 311.810 to sta 445.500 ..	1	J
	22S7046-3	. . LONGERON ASSEMBLY, Fwd keel	1	A
-59	22S7012-1	. FRAME INSTALLATION, Sta 407.833	1	E
	42S7012-29	. FRAME INSTALLATION, Sta 407.833	1	A
	22S7012-3	. . FRAME ASSEMBLY	1	E
	42S7012-31	. . FRAME ASSEMBLY	1	J
■	22S7034-3	. . . SEAL AND DOOR ASSEMBLY, Engine shaft LH	1	J
■	22S7034-5	. . . SEAL AND DOOR ASSEMBLY, Engine shaft RH		
■		*Attaching Parts*		
■	22S7034-33	. . . PIN, Hinge	1	J
■		———*———		
■ -59A	22S7034-19	. . . . DIAPHRAGM, Engine shaft LH	1	J
■	22S7034-21	. . . . DIAPHRAGM, Engine shaft RH	1	J
■	22S7035-3	. . . SEAL ASSEMBLY, Aft transmission shaft LH	1	J
■	22S7035-5	. . . SEAL ASSEMBLY, Aft transmission shaft RH	1	J
■ -59B	22S7035-11	. . . . DIAPHRAGM, Aft transmission	1	J
	22S4303-32	. SUPPORT INSTALLATION, Inverters	1	
	or			
	22S4303-1	. SUPPORT INSTALLATION, Inverters	1	
	22S4101-3	. . RAINSHIELD ASSEMBLY	2	
	or			
	22S4101-1	. . RAINSHIELD ASSEMBLY	2	
	or			
	22S4303-3	. . RAINSHIELD ASSEMBLY	2	
-60	22S7045-1	. LONGERON INSTALLATION, Lower aft LH	1	A
	22S7045-101	. LONGERON INSTALLATION, Lower aft LH	1	E

Figure and Index Number	Part Number	Description 1 2 3 4 5 6 7	Units per Assembly	Usable On Code
7-61	22S7045-2	. LONGERON INSTALLATION, Lower aft RH	1	A
	22S7045-102	. LONGERON INSTALLATION, Lower aft RH	1	E
	22S7045-3	. . LONGERON ASSEMBLY	1	A
	22S7045-103	. . LONGERON ASSEMBLY	1	E
	22S7045-4	. . LONGERON ASSEMBLY	1	A
	22S7045-104	. . LONGERON ASSEMBLY	1	E
-62	22S7013-1	. FRAME INSTALLATION, Sta 445.500	1	J
	22S7013-3	. . FRAME ASSEMBLY	1	J
-63	22S5005-1	. SUPPORT INSTALLATION, Drive shaft bearing sta 463.675	1	J
	22S7014-1	. FRAME INSTALLATION, Sta 483.500	1	J
-64	22S7014-3	. . FRAME ASSEMBLY, LH	1	J
	22S7014-4	. . FRAME ASSEMBLY, RH	1	J
-65	22S7044-1	. LONGERON INSTALLATION, Aft upper	1	J
	22S7044-3	. . LONGERON ASSEMBLY	1	J
	22S3002-1	. HATCH INSTALLATION, Engine, see fig. 19	Ref	J
-66	22S8013-1	. . KEEL INSTALLATION, Removable, see fig. 19	Ref	J
-67	22S7015-1	. FRAME INSTALLATION, Canted sta 521.500 to sta 525.318	1	J
	22S7015-2	. . FRAME ASSEMBLY	1	J
-68	22S7015-3	. . . BEAM ASSEMBLY	1	J
-69	22S5006-1	. SUPPORT INSTALLATION, Drive shaft bearing sta 534.137	1	J,AV
-70	22S3003-3	. FRAME INSTALLATION, Engine air outlet, LH	1	J
-71	22S3003-4	. FRAME INSTALLATION, Engine air outlet, RH	1	J
-72	22S7016-1	. FRAME INSTALLTION, Sta 562.000	1	J
	22S7016-3	. . FRAME ASSEMBLY	1	J
-73	22S7047-1	. LONGERON INSTALLATION, Aft keel sta 521.500 to sta 628.820	1	J,AV
	22S7047-3	. . LONGERON ASSEMBLY, Aft keel	1	J,AV
-74	22S7017-1	. BULKHEAD ASSEMBLY, Sta 603.810	1	J
	22S5003-1	. SUPPORT INSTALLATION, Aft transmission	1	J
	22S2049-1	. . BRACKET INSTALLATION, Aft upper controls LH, see fig. 11	Ref	J,AV
-75	22S2049-2	. . BRACKET INSTALLATION, Aft upper controls RH, see fig. 11	Ref	J,AV
-76	22S5045-1	. . FRAME ASSEMBLY, Aft transmission torque	1	J
	22S5056-1	. . SUPPORT INSTALLATION, Lift LH	1	J
-77	22S5056-2	. . SUPPORT INSTALLATION, Lift RH	1	J
-78	22S7018-1	. BULKHEAD ASSEMBLY, Sta 628.820	1	J
	22S8027-1	. FAIRING INSTALLATION, Tail	1	J
	22S8027-3	. . FAIRING ASSEMBLY, Tail	1	J
-79	22S8027-7	. . . FORMER, Tail fairing	1	
-80	22S8027-9	. . . FORMER, Tail fairing	1	
-81	22S8027-11	. . . FORMER, Tail fairing	2	
-82	22S8027-13	. . . FORMER, Tail fairing	1	

Structure

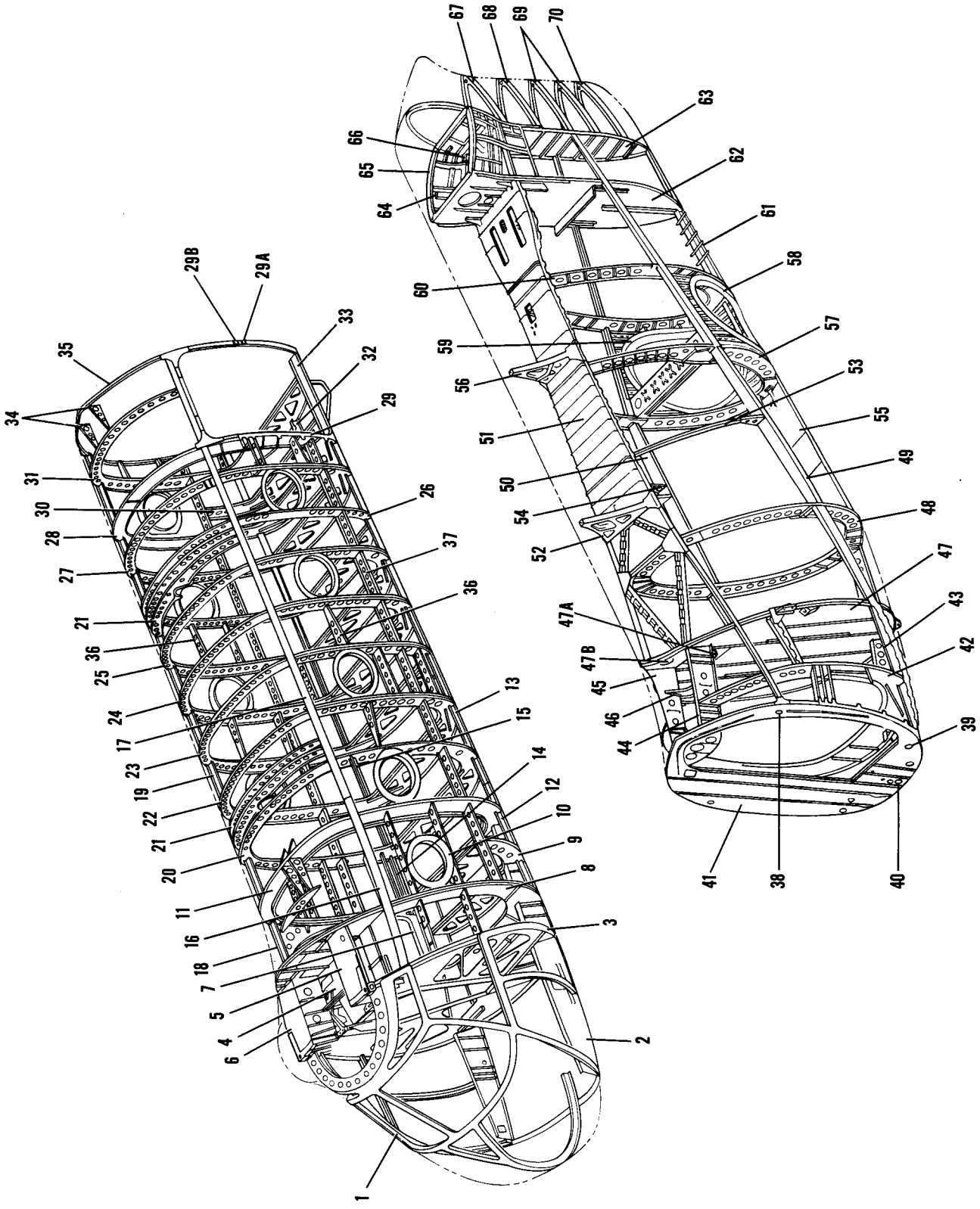

Figure 8. Fuselage, H-21B and H-21C

Figure and Index Number	Part Number	Description 1 2 3 4 5 6 7	Units per Assembly	Usable On Code
8-	42S0001-1	STRUCTURE ASSEMBLY, Fuselage	1	AV
	42S0050-1	STRUCTURE ASSEMBLY, Fuselage	1	I
	42S0002-1	. FUSELAGE ASSEMBLY, Fwd	1	AV
	42S0051-1	. FUSELAGE ASSEMBLY, Fwd	1	I
-1	22S8002-303	. . ENCLOSURE INSTALLATION, Nose, see fig. 17	Ref	AV
	22S8002-20	. . ENCLOSURE INSTALLATION, Nose, see fig. 17	Ref	HA
	42S8170-1	. . RAIL INSTALLATION, Pilot's and co-pilot's sliding window LH	1	DU,DZ
	42S8170-2	. . RAIL INSTALLATION, Pilot's and co-pilot's sliding window RH	1	DU,DZ
-2	22S7039-101	. . BEAM ASSEMBLY, Cockpit support LH	1	AV
	42S9529-1	. . BEAM ASSEMBLY, Cockpit support LH	1	I
	or			
	42S9529-66	. . BEAM ASSEMBLY, Cockpit support LH	1	I
	22S7031-31	. . BEAM ASSEMBLY, Cockpit support RH	1	AV
	42S7031-1	. . BEAM ASSEMBLY, Cockpit support RH	1	I
	or			
	42S7031-46	. . BEAM ASSEMBLY, Cockpit support RH	1	I
-3	22S7001-106	. . BULKHEAD INSTALLATION, Fwd transmission support sta 97.360	1	AV
	42S7001-1	. . BULKHEAD INSTALLATION, Fwd transmission support sta 97.360	1	I
	22S7001-114	. . . BULKHEAD ASSEMBLY, Fwd transmission support	1	AV
	42S7001-2	. . . BULKHEAD ASSEMBLY, Fwd transmission support	1	I
	22S5001-9	. . SUPPORT INSTALLATION, Fwd transmission	1	AV
	42S5001-1	. . SUPPORT INSTALLATION, Fwd transmission	1	I
-4	22S5040-33	. . . DECK INSTALLATION, Fwd transmission	1	AV
	42S5040-1	. . . DECK INSTALLATION, Fwd transmission	1	I
■	22S5040-2	. . . . DECK ASSEMBLY	1	AV
	42S5040-2	. . . . DECK ASSEMBLY	1	I
■ -5	22S5063-1	. . . SHELF INSTALLATION, Fwd transmission support LH	1	AV
■	42S5063-1	. . . SHELF INSTALLATION, Fwd transmission support LH		HK
■	42S5063-31	. . . SHELF INSTALLATION, Fwd transmission support LH	1	HI
-6	22S5063-20	. . . SHELF INSTALLATION, Fwd transmission support RH	1	AV
■	42S5063-2	. . . SHELF INSTALLATION, Fwd transmission support RH	1	HK
■	42S5063-32	. . . SHELF INSTALLATION, Fwd transmission support RH	1	HI
■	22S5063-3	. . . . SHELF ASSEMBLY, LH	1	AV
■	42S5063-3	. . . . SHELF ASSEMBLY, LH	1	HK
■	42S5063-33	. . . . SHELF ASSEMBLY, LH	1	HI
■	22S5063-21	. . . . SHELF ASSEMBLY, RH	1	AV
■	42S5063-4	. . . . SHELF ASSEMBLY, RH	1	HK
■	42S5063-34	. . . . SHELF ASSEMBLY, RH	1	HI
-7	42S7051-1	. . JAMB INSTALLATION, Rescue door	1	AV
	42S7051-2	. . JAMB INSTALLATION, Rescue door	1	I
■	42S7051-77	. . . SEAL, Fwd upper (used with 42S7051-2)	1	
■	or			
■	42S7051-45	. . . SEAL, Fwd upper (used with 42S7051-1 and -2)	1	
■	42S7051-78	. . . SEAL, Fwd lower (used with 42S7051-2)	1	
■	or			
■	42S7051-39	. . . SEAL, Fwd lower (used with 42S7051-1 and -2)	1	
■	42S7051-61	. . . SEAL, Bumper	1	AV
■	22S7051-93	. . . BUMPER, Rubber	1	AV
■	42S7051-63	. . . SEAL, Keeper	1	AV
■	42S7051-66	. . . SEAL, Aft striker plate	1	I
-8	42S7002-1	. . FRAME INSTALLATION, Sta 119.500	1	AV
	42S9513-1	. . FRAME INSTALLATION, Sta 119.500	1	I
	42S7002-3	. . . FRAME ASSEMBLY	1	AV
	42S9513-2	. . . FRAME ASSEMBLY	1	I
	42S8005-1	. . SCUPPER INSTALLATION	1	AU
	42S8005-7	. . . SCUPPER	1	AU
-9	42S7020-1	. . FRAME INSTALLATION, Floor sta 139.500	1	AV
	42S9400-1	. . FRAME INSTALLATION, Floor sta 139.500	1	I
	42S7020-3	. . . FRAME ASSEMBLY, Floor	1	AV
	42S9400-2	. . . FRAME ASSEMBLY, Floor	1	I
	42S9400-6	. . . FRAME ASSEMBLY, Floor	1	I

Figure and Index Number	Part Number	Description 1 2 3 4 5 6 7	Units per Assembly	Usable On Code
		WINDOW INSTALLATION, Cabin, see fig. 17*	Ref	
8-10	42S8011	. . WINDOW INSTALLATION, Sta 159.500	1	AV
-11	42S7003-1	. . FRAME INSTALLATION, Sta 159.500	1	I
	42S9402-1	. . FRAME INSTALLATION, Sta 159.500	1	AV
	42S7003-3	. . . FRAME ASSEMBLY	1	I
	42S9501-1	. . . FRAME ASSEMBLY, Upper	1	I
	or			
	42S9501-21	. . . FRAME ASSEMBLY, Upper	1	I
	42S9502-1	. . . FRAME ASSEMBLY, LH	1	I
	42S9503-1	. . . FRAME ASSEMBLY, RH	1	I
	42S9504-1	. . . FRAME ASSEMBLY, Lower	1	I
		Attaching Parts		
	AN4-12A	. . . BOLT	4	I
	AN365-428	. . . NUT	4	I
	AN960D416	. . . WASHER	4	I
	AN960D416L	. . . WASHER	4	I

-12	42S7040-3	. . LONGERON, Front lower LH	1	AV
-13	42S7040-1	. . LONGERON, Rear lower LH	1	AV
	42S7040-5	. . LONGERON, Fwd lower LH	1	I
-14	42S7040-4	. . LONGERON, Front lower RH	1	AV
-15	42S7040-2	. . LONGERON, Rear lower RH	1	AV
	42S7040-6	. . LONGERON, Fwd lower RH	1	I
-16	42S7042-3	. . LONGERON, Front upper LH	1	AV
-17	42S7042-1	. . LONGERON, Rear upper LH	1	AV
	42S7042-4	. . LONGERON, Fwd upper LH	1	I
-18	42S7043-3	. . LONGERON, Front upper RH	1	AV
-19	42S7043-1	. . LONGERON, Rear upper RH	1	AV
	42S7043-4	. . LONGERON, Fwd upper RH	1	I
-20	42S7037-1	. . FRAME INSTALLATION, Sta 179.500	1	AV
	42S9523-1	. . FRAME INSTALLATION, Sta 179.500	1	I
	42S7037-3	. . . FRAME ASSEMBLY	1	AV
-21	22S5004-1	. . SUPPORT INSTALLATION, Bearing sta 190.895 and sta 276.742	2	AV
	42S5004-1	. . SUPPORT INSTALLATION, Bearing sta 190.895 and sta 276.742	2	I
	22S5004-2	. . . SUPPORT ASSEMBLY, Bearing	1	AV
	42S5004-2	. . . SUPPORT ASSEMBLY, Bearing	1	I
-22	42S7004-1	. . FRAME INSTALLATION, Sta 199.500	1	AV
	42S9403-1	. . FRAME INSTALLATION, Sta 199.500	1	I
	42S7004-3	. . . FRAME ASSEMBLY	1	AV
	42S9515-1	. . . WEB, Upper frame	1	I
	or			
	42S9515-2	. . . WEB, Upper frame	1	I
	42S9516-21	. . . FRAME ASSEMBLY, LH	1	I
	or			
	42S9516-61	. . . FRAME ASSEMBLY, LH	1	I
	42S9516-22	. . . FRAME ASSEMBLY, RH	1	I
	or			
	42S9516-62	. . . FRAME ASSEMBLY, RH	1	I
	42S9517-2	. . . FRAME ASSEMBLY, Lower	1	I
	or			
	42S9517-32	. . . FRAME ASSEMBLY, Lower	1	I
-23	42S7005-1	. . FRAME INSTALLATION, Sta 219.500	1	AV
	42S9404-1	. . FRAME INSTALLATION, Sta 219.500	1	I
	42S7005-3	. . . FRAME ASSEMBLY	1	AV
	42S9515-1	. . . WEB, Upper frame	1	I
	or			
	42S9515-2	. . . WEB, Upper frame	1	I
	42S9516-17	. . . FRAME ASSEMBLY, LH	1	I
	or			
	42S9516-57	. . . FRAME ASSEMBLY, LH	1	I
	42S9516-18	. . . FRAME ASSEMBLY, RH	1	I
	or			
	42S9516-58	. . . FRAME ASSEMBLY, RH	1	I

*For proper usable on codes and complete breakdown, see figure number as indicated.

Figure and Index Number	Part Number	Description 1 2 3 4 5 6 7	Units per Assembly	Usable On Code
8-	42S9517-3	. . . FRAME ASSEMBLY, Lower	1	I
	or			
	42S9517-33	. . . FRAME ASSEMBLY, Lower	1	I
-24	42S7022-1	. . FRAME INSTALLATION, Sta 239.500	1	AV
	42S9518-1	. . FRAME INSTALLATION, Sta 239.500	1	I
	42S7022-3	. . . FRAME ASSEMBLY	1	AV
	42S9519-1	. . . WEB, Upper frame	1	I
	or			
	42S9519-2	. . . WEB, Upper frame	1	I
	42S9516-19	. . . FRAME ASSEMBLY, LH	1	I
	or			
	42S9516-59	. . . FRAME ASSEMBLY, LH	1	I
	42S9516-20	. . . FRAME ASSEMBLY, RH	1	I
	or			
	42S9516-60	. . . FRAME ASSEMBLY, RH	1	I
	42S9517-4	. . . FRAME ASSEMBLY, Lower	1	I
	or			
	42S9517-34	. . . FRAME ASSEMBLY, Lower	1	I
-25	42S7006-1	. . FRAME INSTALLATION, Sta 259.500	1	AV
	42S9405-1	. . FRAME INSTALLATION, Sta 259.500	1	I
	42S7006-3	. . . FRAME ASSEMBLY	1	AV
-26	42S7038-1	. . FRAME INSTALLTION, Sta 279.500	1	AV
	42S9524-1	. . FRAME INSTALLTION, Sta 279.500	1	I
	42S7038-3	. . . FRAME ASSEMBLY	1	AV
	42S9526-1	. . . FRAME ASSEMBLY, Upper	1	I
	or			
	42S9526-2	. . . FRAME ASSEMBLY, Upper	1	I
	42S9520-1	. . . FRAME ASSEMBLY, LH	1	I
	or			
	42S9520-25	. . . FRAME ASSEMBLY, LH	1	I
	42S9520-2	. . . FRAME ASSEMBLY, RH	1	I
	or			
	42S9520-26	. . . FRAME ASSEMBLY, RH	1	I
	42S9525-2	. . . FRAME ASSEMBLY, Lower	1	I
-27	42S7007-1	. . FRAME INSTALLATION, Sta 299.500	1	AV
	42S9406-1	. . FRAME INSTALLATION, Sta 299.500	1	I
	42S7007-3	. . . FRAME ASSEMBLY	1	AV
	42S9500-1	. . . FRAME, Upper	1	I
	or			
	42S9500-2	. . . FRAME, Upper	1	I
	42S9411-1	. . . FRAME ASSEMBLY, LH	1	I
	or			
	42S9411-10	. . . FRAME ASSEMBLY, LH	1	I
	42S9516-23	. . . FRAME ASSEMBLY, RH	1	I
	or			
	42S9516-64	. . . FRAME ASSEMBLY, RH	1	I
	42S9410-1	. . . FRAME ASSEMBLY, Lower	1	I
	or			
	42S9410-11	. . . FRAME ASSEMBLY, Lower	1	I
-28	42S7008-1	. . FRAME INSTALLATION, Sta 311.810	1	AV
	42S9407-1	. . FRAME INSTALLATION, Sta 311.810	1	I
	42S7008-3	. . . FRAME ASSEMBLY	1	AV
-29	42S7050-1	. . JAMB INSTALLATION, Cabin door	1	AV
	42S7050-402	. . JAMB INSTALLATION, Cabin door	1	I
-29A	42S7565-401	. . . BUMPER, Rubber	1	AV
	42S7568-2	. . . PAD, Rubber	1	I
-29B	42S7050-7	. . . SEAL, Striker	1	AV
	42S7050-405	. . . SEAL, Keeper	1	I
	42S7050-406	. . . SEAL, Keeper	1	I
	42S7050-407	. . . SEAL, Keeper	1	I
-30	42S7024-1	. . FRAME INSTALLATION, Floor sta 319.500	1	AV
	42S9548-1	. . FRAME INSTALLATION, Floor sta 319.500	1	I

Figure and Index Number	Part Number	Description 1 2 3 4 5 6 7	Units per Assembly	Usable On Code
8-	42S7024-3	. . . FRAME ASSEMBLY, Floor	1	AV
	42S9548-3	. . . FRAME ASSEMBLY, Floor	1	I
	or			
	42S9548-33	. . . FRAME ASSEMBLY, Floor	1	I
-31	42S7009-1	. . FRAME INSTALLATION, Sta 339.500	1	AV
	42S9408-1	. . FRAME INSTALLATION, Sta 339.500	1	I
	42S7009-3	. . . FRAME ASSEMBLY	1	AV
	42S9511-1	. . . FRAME ASSEMBLY, Upper	1	I
	42S9510-1	. . . FRAME ASSEMBLY, RH	1	I
	42S9509-1	. . . FRAME ASSEMBLY, Lower	1	I
-32	42S7046-35	. . LONGERON INSTL, Fwd keel sta 311.810 to sta 359.800	1	AU
	42S7046-37	. . . LONGERON ASSEMBLY, Fwd keel	1	AU
-33	42S7025-1	. . BEAM INSTALLATION, Floor	1	AU
-34	42S5177-1	. . BEAM INSTALLATION, Fwd	1	AV
	42S5086-1	. . BEAM INSTALLATION, Fwd LH	1	I
	42S5086-2	. . BEAM INSTALLATION, Fwd RH	1	I
-35	42S7988-1	. . FRAME INSTALLATION, Fwd sta 359.800	1	AU
-36	42S4012-1	. . SUPPORTS INSTL, Litter sta 119.500 to sta 359.975, see fig. 89	Ref	AV
	42S4012-2	. . SUPPORTS INSTL, Litter sta 119.500 to sta 359.975, see fig. 89	Ref	I
-37	42S4011-1	. . SUPPORT INSTALLATION, Troop seats	1	AV
	42S4011-4	. . SUPPORT INSTALLATION, Troop seats	1	I
	42S4562-1	. . TIE-DOWN INSTALLATION, Outboard cargo fwd	1	HK
	42S4562-3	. . TIE-DOWN INSTALLATION, Outboard cargo fwd	1	HI
	42S4080-1	. . TIE-DOWN INSTALLATION, Outboard cargo fwd	1	AV
	42S0003-1	. FUSELAGE ASSEMBLY, Aft	1	AV
	42S0052-1	. FUSELAGE ASSEMBLY, Aft	1	I

Figure and Index Number	Part Number	Description 1 2 3 4 5 6 7	Units per Assembly	Usable On Code
8-		*Attaching Parts*		
-38	NAS152-46	. BOLT	2	DW
	NAS152-50	. BOLT	2	HR
-39	NAS150-40	. BOLT	2	AU
-40	NAS147-35	. BOLT	2	AU
	AN4-6A	. BOLT	58	AU
	AN4-7A	. BOLT	18	AU
	AN173-5A	. BOLT (Used to attach 42S5177-1 or 42S5086-1 and -2)	3	AU
	AN173-7A	. BOLT (Used to attach 42S5177-1 or 42S5086-1 and -2)	5	AU
	AN173-10A	. BOLT (Used to attach 42S5177-1 or 42S5086-1 and -2)	1	AU
	AN173-12A	. BOLT (Used to attach 42S5177-1 or 42S5086-1 and -2)	1	AU
	AN525-10R10	. SCREW (Used to attach cove instl)	7	AU
	AN525-10R11	. SCREW (Used to attach troop seat intercostal)	1	AU
	AN525-10R9	. SCREW (Used to attach cabin heating duct supports)	2	AU
	AN525-10R8	. SCREW (Used to attach cabin heating duct supports)	5	AU
	AN525-10R14	. SCREW (Used to attach cabin heating duct supports)	2	AU
	S-1452-126	. NUT, Barrel (EN)	2	AU
	S-1452-108	. NUT, Barrel (EN)	1	AU
	42S7986-1	. NUT, Barrel (used to attach lower LH longeron)	1	AU
	EB070	. NUT (EN)	2	AU
	AN365-428	. NUT	76	AU
	AN365-1032	. NUT	27	AU
	NAS143-12C	. WASHER (Under bolt hd)	2	AU
	NAS143-10C	. WASHER (Under bolt hd)	2	AU
	NAS143-7	. WASHER (Two under nut)	4	AU
	NAS143-7C	. WASHER (Under bolt hd)	2	AU
	AN960D416	. WASHER	84	AU
	AN960D416L	. WASHER	68	AU
	AN960D10	. WASHER	51	AU
	AN960D10L	. WASHER	21	AU
		**		
-41	42S7010-1	. . FRAME INSTALLATION, Canted sta 359.800	1	AU
	42S7010-3	. . . FRAME ASSEMBLY	1	EM
	42S7010-4	. . . FRAME ASSEMBLY	1	EH,EI
-42	22S7011-201	. . FRAME INSTALLATION, Sta 377.560	1	KG
	22S7011-429	. . FRAME INSTALLATION, Sta 377.560	1	JD
	22S7011-203	. . . FRAME ASSEMBLY	1	KG
	22S7011-430	. . . FRAME ASSEMBLY	1	JD
-43	42S7046-1	. . LONGERON INSTL, Aft keel sta 359.800 to sta 445.500	1	AU
	42S5176-1	. . SUPPORTS INSTALLATION, Central transmission	1	AV
	42S5084-1	. . SUPPORTS INSTALLATION, Central transmission	1	GI
	42S5077-1	. . SUPPORTS INSTALLATION, Central transmission	1	GJ
-44	42S5176-3	. . . BEAM ASSEMBLY, LH	1	AV
	42S5084-3	. . . BEAM ASSEMBLY, LH	1	GI
	42S5077-3	. . . BEAM ASSEMBLY, LH	1	GJ
-45	42S5176-4	. . . BEAM ASSEMBLY, RH	1	AV
	42S5084-4	. . . BEAM ASSEMBLY, RH	1	GI
	42S5077-4	. . . BEAM ASSEMBLY, RH	1	GJ
-46	42S5070-1	. . . SUPPORT INSTALLATION, Central transmission aft	1	E,AV
	42S5195-1	. . . SUPPORT INSTALLATION, Central transmission aft	1	GI
	42S5195-10	. . . SUPPORT INSTALLATION, Central transmission aft	1	GJ
-47	42S7012-1	. . FRAME INSTALLATION, Sta 407.833	1	AU
	42S7012-3	. . . FRAME ASSEMBLY	1	AU
	22S7034-3	. . . . SEAL AND DOOR ASSEMBLY, Engine shaft LH	1	AU
	22S7034-5	. . . . SEAL AND DOOR ASSEMBLY, Engine shaft RH	1	AU
		Attaching Parts		
	22S7034-33	. . . . PIN, Hinge	1	AU
		**		
-47A	22S7034-19	. . . . . DIAPHRAGM, Engine shaft LH	1	AU
	22S7034-21	. . . . . DIAPHRAGM, Engine shaft RH	1	AU
	22S7035-3	. . . . SEAL ASSEMBLY, Aft transmission shaft LH	1	AU
	22S7035-5	. . . . SEAL ASSEMBLY, Aft transmission shaft RH	1	AU
-47B	22S7035-11	. . . . . DIAPHRAGM, Aft transmission	1	AU
	22S4303-32	. . SUPPORT INSTALLATION, Inverters	1	AV
	42S4573-1	. . SUPPORT INSTALLATION, Inverters	1	I
	22S4101-3	. . . RAINSHIELD ASSEMBLY	2	

Figure and Index Number	Part Number	Description (1 2 3 4 5 6 7)	Units per Assembly	Usable On Code
8-48	42S7013-1	. . FRAME INSTALLATION, Sta 445.500	1	HK,KH
	42S7013-13	. . FRAME INSTALLATION, Sta 445.500	1	KJ
	42S7013-3	. . . FRAME ASSEMBLY	1	HK,KH
	42S7013-14	. . . FRAME ASSEMBLY	1	KJ
-49	42S7045-1	. . LONGERON INSTALLATION, Lower LH	1	AV
	42S9530-1	. . LONGERON INSTALLATION, Lower LH	1	I
-50	42S7045-2	. . LONGERON INSTALLATION, Lower RH	1	AV
	42S9530-2	. . LONGERON INSTALLATION, Lower RH	1	I
-51	42S7044-1	. . LONGERON INSTALLATION, Upper aft	1	AV
	42S7044-415	. . LONGERON INSTALLATION, Upper aft	1	HK,KK
	42S7044-441	. . LONGERON INSTALLATION, Upper aft	1	KI
-52	22S5005-101	. . SUPPORT INSTL, Drive shaft bearing sta 463.675	1	AV
	42S5005-1	. . SUPPORT INSTL, Drive shaft bearing sta 463.675	1	I
-53	42S7014-23	. . FRAME ASSEMBLY, LH sta 483.500	1	AV
	42S8457-9	. . FRAME ASSEMBLY, LH sta 483.500	1	I
	or			
	42S8457-23	. . FRAME ASSEMBLY, LH sta 483.500	1	I
-54	42S7014-24	. . FRAME ASSEMBLY, RH sta 483.500	1	AV
	42S8457-10	. . FRAME ASSEMBLY, RH sta 483.500	1	I
	or			
	42S8457-24	. . FRAME ASSEMBLY, RH sta 483.500	1	I
	42S3002-1	. . HATCH INSTALLATION, Engine, see fig. 19	Ref	AV
	42S3002-4	. . HATCH INSTALLATION, Engine, see fig. 19	Ref	I
-55	22S8013-101	. . . KEEL INSTALLATION, Removable, see fig. 19	Ref	AU
-56	22S5006-1	. . SUPPORT INSTL, Drive shaft bearing sta 534.137	1	J,AV
	42S5006-1	. . SUPPORT INSTL, Drive shaft bearing sta 534.137	1	I
-57	42S7015-1	. . FRAME INSTALLATION, Canted sta 521.500 to sta 525.318	1	AU
	42S7015-3	. . . FRAME ASSEMBLY	1	AU
-58	22S3003-3	. . FRAME INSTALLATION, Engine air outlet LH	1	AV
	42S8451-1	. . PANEL INSTALLATION, Engine air outlet LH	1	AI,GG
	42S8451-425	. . PANEL INSTALLATION, Engine air outlet LH	1	BJ
	42S8526-3	. . PANEL INSTALLATION, Engine air outlet LH	1	BL
-59	22S3003-4	. . FRAME INSTALLATION, Engine air outlet RH	1	AV
	42S8451-2	. . PANEL INSTALLATION, Engine air outlet RH	1	GO
	42S8451-5	. . PANEL INSTALLATION, Engine air outlet RH	1	GP
	42S8451-426	. . PANEL INSTALLATION, Engine air outlet RH	1	BJ
	42S8526-4	. . PANEL INSTALLATION, Engine air outlet RH	1	BL
-60	42S7016-1	. . FRAME INSTALLATION, Sta 562	1	AU
	42S7016-3	. . . FRAME ASSEMBLY	1	AU
-61	22S7047-1	. . LONGERON INSTL, Aft keel sta 521.500 to sta 628.820	1	J,AV
	42S7047-1	. . LONGERON INSTL, Aft keel sta 521.500 to sta 628.820	1	HK
	42S7047-32	. . LONGERON INSTL, Aft keel sta 521.500 to sta 628.820	1	HI
-62	42S7017-1	. . BULKHEAD INSTALLATION, Sta 603.810	1	AV
	42S9554-1	. . BULKHEAD INSTALLATION, Sta 603.810	1	KG
	42S9554-88	. . BULKHEAD INSTALLATION, Sta 603.810	1	JD
	42S7017-3	. . . BULKHEAD ASSEMBLY	1	AV
	42S9554-3	. . . BULKHEAD ASSEMBLY	1	KG
	42S9554-81	. . . BULKHEAD ASSEMBLY	1	JD
-63	42S7018-1	. . BULKHEAD ASSEMBLY, Sta 628.820	1	AV
	42S9522-1	. . BULKHEAD ASSEMBLY, Sta 628.820	1	I
	42S5003-1	. . SUPPORT INSTALLATION, Aft transmission	1	AV
	42S5087-1	. . SUPPORT INSTALLATION, Aft transmission	1	EJ
	42S5087-41	. . SUPPORT INSTALLATION, Aft transmission	1	EK
	42S5087-54	. . SUPPORT INSTALLATION, Aft transmission	1	EL
	42S5087-60	. . SUPPORT INSTALLATION, Aft transmission	1	JD
	22S2049-1	. . . BRACKET INSTL, Aft upper controls LH, see fig. 11	Ref	J,AV
	42S2049-1	. . . BRACKET INSTL, Aft upper controls LH, see fig. 11	Ref	I
-64	22S2049-2	. . . BRACKET INSTL, Aft upper controls RH, see fig. 11	Ref	J,AV
	42S2049-2	. . . BRACKET INSTL, Aft upper controls RH, see fig. 11	Ref	I
-65	42S5045-1	. . . FRAME ASSEMBLY, Aft transmission torque	1	AV
	42S5196-1	. . . FRAME ASSEMBLY, Aft transmission torque	1	KG
	42S5196-6	. . . FRAME ASSEMBLY, Aft transmission torque	1	JD
	42S5056-1	. . . SUPPORT INSTALLATION, Lift LH	1	AU
-66	42S5056-2	. . . SUPPORT INSTALLATION, Lift RH	1	AU

Figure and Index Number	Part Number	Description 1 2 3 4 5 6 7	Units per Assembly	Usable On Code
8-	42S4562-2	. . TIE-DOWN INSTALLATION, Outboard cargo aft	1	HK
	42S4080-3	. . TIE-DOWN INSTALLATION, Outboard cargo aft	1	AV
	42S4562-4	. . TIE-DOWN INSTALLATION, Outboard cargo aft	1	HI
	22S8027-101	. . FAIRING INSTALLATION, Tail	1	AU
	22S8027-103	. . . FAIRING ASSEMBLY, Tail	1	EU
	22S8027-107	. . . FAIRING ASSEMBLY, Tail	1	IU
-67	22S8027-7	. . . . FORMER	1	
-68	22S8027-9	. . . . FORMER	1	
-69	22S8027-11	. . . . FORMER	2	
-70	22S8027-13	. . . . FORMER	1	

Structure

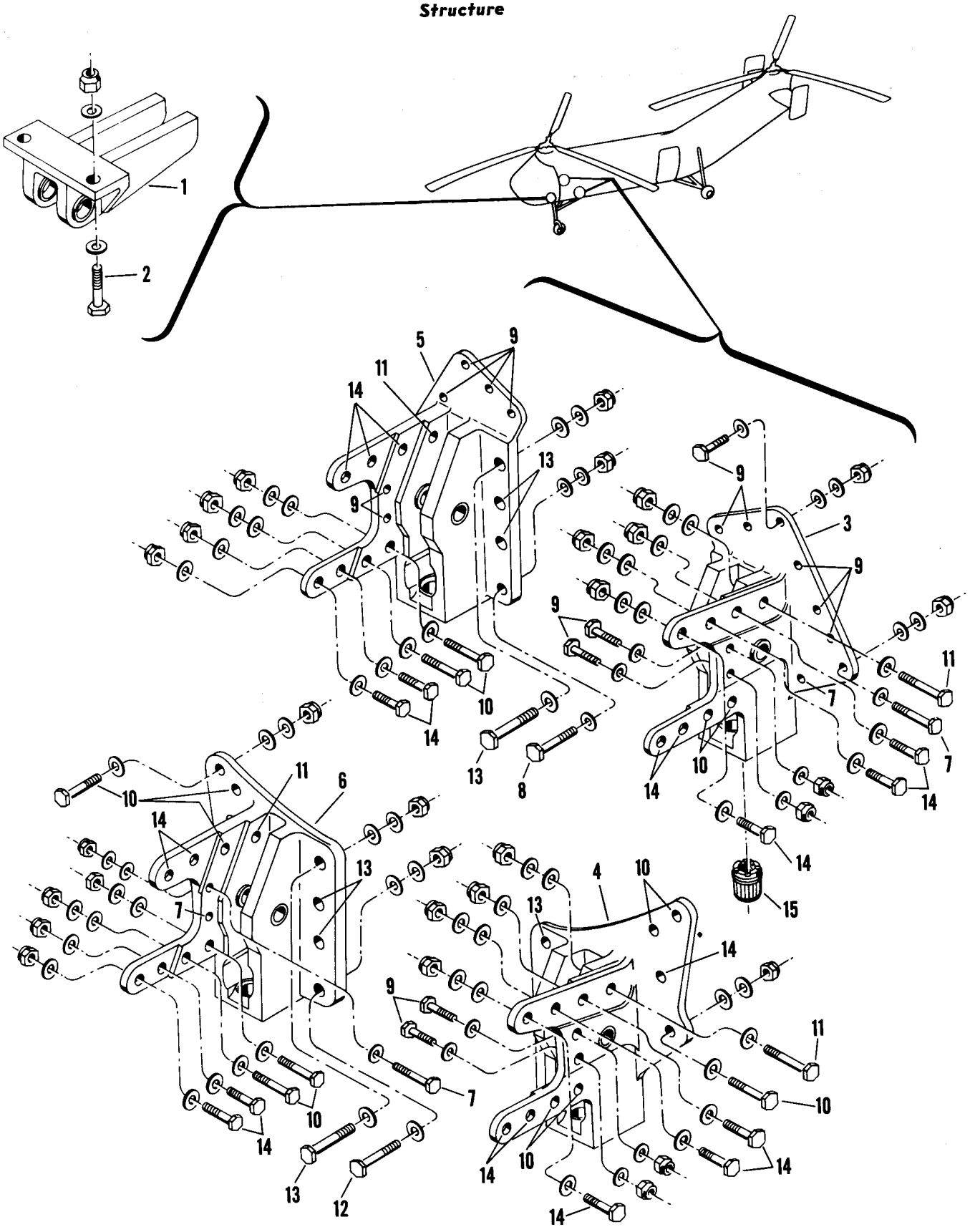

Figure 9. Alighting Gear Supports (Sheet 1 of 2)

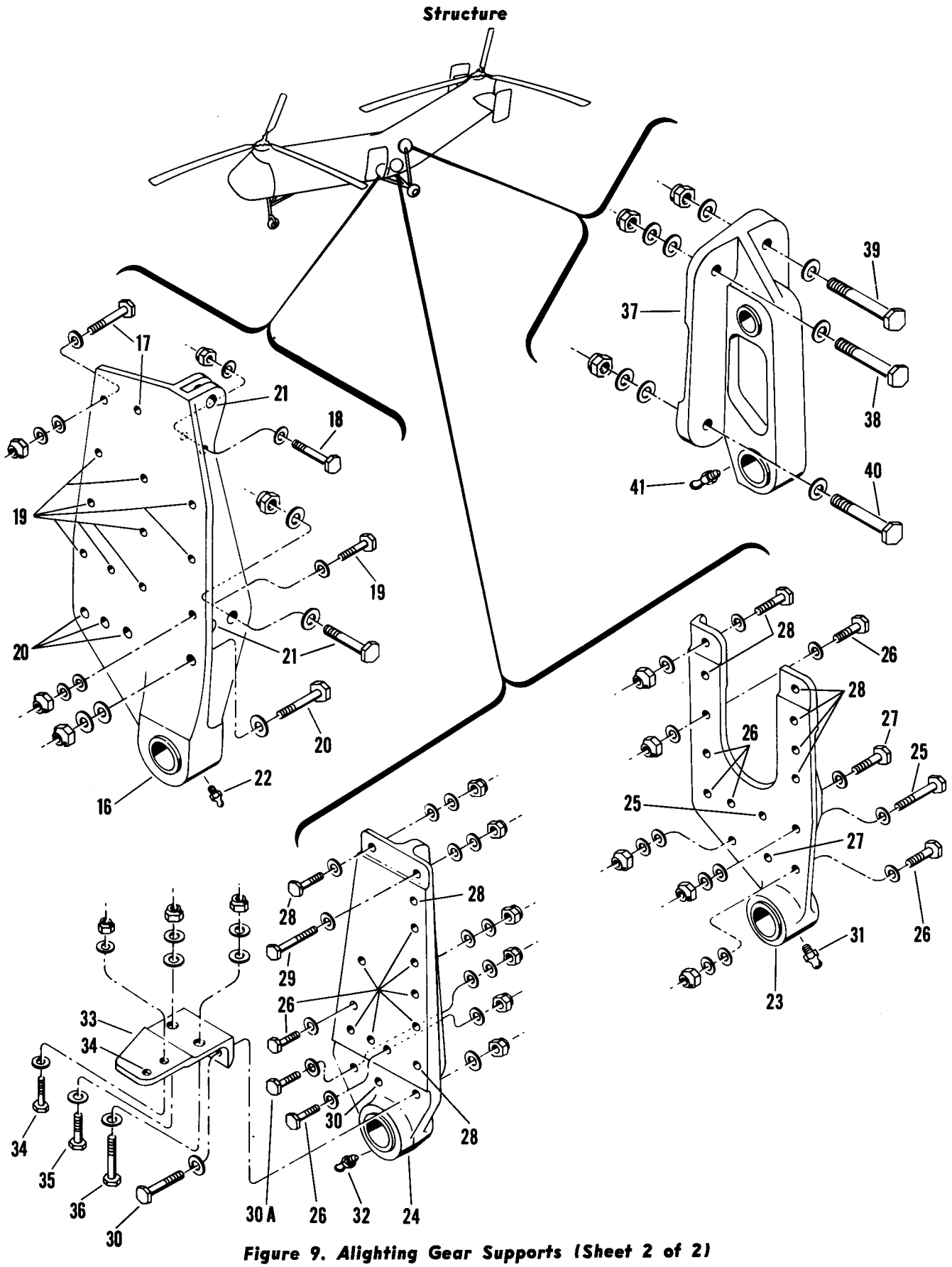

Figure 9. Alighting Gear Supports (Sheet 2 of 2)

Figure and Index Number	Part Number	Description 1 2 3 4 5 6 7	Units per Assembly	Usable On Code
9-	22S1001-1	SUPPORT INSTALLATION, Auxiliary alighting gear	1	J
	42S1001-1	SUPPORT INSTALLATION, Auxiliary alighting gear	1	AU
-1	22S1045-1	. FITTING, Auxiliary gear shock strut attachment	1	J
	42S1045-1	. FITTING, Auxiliary gear shock strut attachment	1	AU
		Attaching Parts		
-2	AN6-12A	. BOLT	2	
	AN4-23A	. BOLT	4	AU
	AN365-624	. NUT	2	
	AN365-428	. NUT	4	AU
	AN960D616	. WASHER	2	
	AN960D616L	. WASHER	2	
	AN960D416	. WASHER	8	AU
		———*———		
	22S1045-3	. . FITTING	1	J
	42S1045-3	. . FITTING	1	AU
	NAS77-8-17	. . BUSHING	4	
-3	22S1051-1	. FITTING ASSEMBLY, V-brace attachment LH	1	A
	22S1065-1	. FITTING ASSEMBLY, V-brace attachment LH	1	E
-4	42S1051-1	. FITTING ASSEMBLY, V-brace attachment LH	1	AU
-5	22S1054-1	. FITTING ASSEMBLY, V-brace attachment RH	1	A
	22S1067-1	. FITTING ASSEMBLY, V-brace attachment RH	1	E
-6	42S1054-1	. FITTING ASSEMBLY, V-brace attachment RH	1	AU
		Attaching Parts		
-7	AN4-10A	. BOLT	2	AU
-8	AN4-11A	. BOLT	2	J
	AN4-11A	. BOLT	1	AU
-9	AN4-7A	. BOLT	8	J
	AN4-7A	. BOLT	2	AU
-10	AN5-10A	. BOLT	2	J
	AN5-10A	. BOLT	6	AU
-11	AN5-11A	. BOLT	1	
-12	AN5-12A	. BOLT	1	AU
-13	AN5-13A	. BOLT	3	
-14	AN5-7A	. BOLT	5	J
	AN5-7A	. BOLT	6	AU
	AN365-428	. NUT	12	J
	AN365-428	. NUT	3	AU
	AN365-524	. NUT	11	J
	AN365-524	. NUT	16	AU
	AN960D416	. WASHER	28	J
	AN960D416	. WASHER	9	AU
	AN960D416L	. WASHER	6	J
	AN960D416L	. WASHER	2	AU
	AN960D516	. WASHER	23	J
	AN960D516	. WASHER	37	AU
	AN960D516L	. WASHER	9	J
	AN960D516L	. WASHER	10	AU
		———*———		
	22S1051-3	. . FITTING, LH	1	A
	22S1065-3	. . FITTING, LH	1	E
	42S1070-1	. . FITTING, LH	1	AU
	or			
	42S1051-3	. . FITTING, LH	1	AU
	NAS77-9-46	. . BUSHING	1	J
	NAS75-9-020	. . BUSHING	1	AU
	NAS77-9-56	. . BUSHING	1	
-15	42D22-080	. . NUT, Spline (EN)	1	
	22S1054-3	. . FITTING, RH	1	A
	22S1067-3	. . FITTING, RH	1	E
	42S1071-1	. . FITTING, RH	1	AU
	or			
	42S1054-3	. . FITTING, RH	1	AU

Figure and Index Number	Part Number	Description 1 2 3 4 5 6 7	Units per Assembly	Usable On Code
9-	NAS77-9-46	. . BUSHING	1	J
	NAS75-9-020	. . BUSHING	1	AU
	NAS77-9-56	. . BUSHING	1	
	42D22-080	. . NUT, Spline (EN)	1	
	42S1067-1	. WASHER, Auxiliary alighting gear radius	2	AU
	22S7011-201	FRAME INSTALLATION, Sta 377.560, see fig. 8	Ref	
-16	42S1052-1	. FITTING ASSEMBLY, Main alighting gear LH sta 377.560	1	
	or			
	22S1063-1	. FITTING ASSEMBLY, Main alighting gear LH sta 377.560	1	
	42S1052-2	. FITTING ASSEMBLY, Main alighting gear RH sta 377.560	1	
	or			
	22S1063-2	. FITTING ASSEMBLY, Main alighting gear RH sta 377.560	1	
		Attaching Parts		
-17	AN4-10A	. BOLT (Used with 22S1063-1 and -2)	2	
-18	AN4-10A	. BOLT (Used with 42S1052-1 and -2)	4	
	AN4-13A	. BOLT (Used with 22S1063-1 and -2)	4	
-19	AN4-7A	. BOLT	10	
-20	AN6-11A	. BOLT	4	
-21	AN6-12A	. BOLT (Used with 42S1052-1 and -2)	3	
	AN6-14A	. BOLT (Used with 22S1063-1 and -2)	3	
	AN365-428	. NUT	16	
	AN365-624	. NUT	7	
	AN960D416	. WASHER	38	
	AN960D416L	. WASHER	6	
	AN960D616	. WASHER	15	
	AN960D616L	. WASHER	3	
		———*———		
	42S1052-3	. . FITTING, LH (used with 42S1052-1)	1	
	22S1063-3	. . FITTING, LH (used with 22S1063-1)	1	
	42S1052-4	. . FITTING, RH (used with 42S1052-2)	1	
	22S1063-4	. . FITTING, RH (used with 22S1063-2)	1	
	NAS77-14-59	. . BUSHING	1	
-22	MS15001-1	. . FITTING, Lubricator	1	
	22S7012-1	FRAME INSTALLATION, Sta 407.833, see fig. 7	Ref	A
	42S7012-1	FRAME INSTALLATION, Sta 407.833, see fig. 7 and 8	Ref	B
-23	22S1061-1	. FITTING ASSEMBLY, Main alighting gear LH sta 407.833	1	A
-24	42S1081-1	. FITTING ASSEMBLY, Main alighting gear LH sta 407.833	1	KF
	42S1078-1	. FITTING ASSEMBLY, Main alighting gear LH sta 407.833	1	KE
	22S1061-2	. FITTING ASSEMBLY, Main alighting gear RH sta 407.833	1	A
	42S1081-2	. FITTING ASSEMBLY, Main alighting gear RH sta 407.833	1	KF
	42S1078-2	. FITTING ASSEMBLY, Main alighting gear RH sta 407.833	1	KE
		Attaching Parts		
-25	AN4-10A	. BOLT	2	A
-26	AN4-6A	. BOLT	5	A
	AN4-6A	. BOLT	9	KE
	AN4-6A	. BOLT	6	KF
	AN174-6A	. BOLT	3	KF
-27	AN4-7A	. BOLT (Used with 22S1061-1)	2	A
	AN4-6A	. BOLT (Used with 22S1061-2)	2	A
-28	AN4-7A	. BOLT	6	A
	AN4-7A	. BOLT	3	KE
	AN4-7A	. BOLT	2	KF
	AN175-7A	. BOLT	1	KF
-29	AN4-11A	. BOLT	1	B
-30	AN5-10A	. BOLT	2	KE
	AN175-11A	. BOLT	2	KF
-30A	AN175-7A	. BOLT	1	KF
	AN365-428	. NUT	15	A
	AN365-428	. NUT	13	KE
	AN365-428	. NUT	9	KF
	AN365-524	. NUT	2	KE
	AN365-524	. NUT	7	KF
	AN960D416	. WASHER	30	A
	AN960D416	. WASHER	18	KF
	AN960D416	. WASHER	24	KE

Figure and Index Number	Part Number	Description 1 2 3 4 5 6 7	Units per Assembly	Usable On Code
9-	AN960D516	. WASHER	6	KE
	AN960D516	. WASHER	11	KF
	AN960D416L	. WASHER	11	A
	AN960D416L	. WASHER	12	KE
	AN960D416L	. WASHER	9	KF
	AN960D516L	. WASHER	6	KF
		———*———		
	22S1061-3	. . FITTING, LH	1	A
	42S1078-3	. . FITTING, LH	1	KE
	42S1081-3	. . FITTING, LH	1	KF
	22S1061-4	. . FITTING, RH	1	A
	42S1078-4	. . FITTING, RH	1	KE
	42S1081-4	. . FITTING, RH	1	KF
	NAS77-11-44	. . BUSHING	2	A
	NAS77-14-59	. . BUSHING	2	B
-31	MS15002-1	. . FITTING, Lubricator	1	A
-32	MS15001-1	. . FITTING, Lubricator	1	B
-33	42S1043-1	. FITTING, Main alighting gear LH sta 407.833	1	AV,E
	42S1043-5	. FITTING, Main alighting gear LH sta 407.833	1	I
	42S1043-2	. FITTING, Main alighting gear RH sta 407.833	1	AV,E
	42S1043-6	. FITTING, Main alighting gear RH sta 407.833	1	I
		Attaching Parts		
-34	AN4-7A	. BOLT	2	B
-35	AN5-7A	. BOLT	1	B
-36	AN5-10A	. BOLT	1	B
	AN365-428	. NUT	2	B
	AN365-524	. NUT	2	B
	AN960D416	. WASHER	4	B
	AN960D416L	. WASHER	2	B
	AN960D516	. WASHER	5	B
	AN960D516L	. WASHER	1	B
		———*———		
-37	42S1048-1	. FITTING ASSEMBLY, Shock strut attachment LH	1	J,FB
	42S1080-1	. FITTING ASSEMBLY, Shock strut attachment LH	1	FC
	or			
	42S1080-7	. FITTING ASSEMBLY, Shock strut attachment LH	1	FC
	42S1048-2	. FITTING ASSEMBLY, Shock strut attachment RH	1	J,FB
	42S1080-2	. FITTING ASSEMBLY, Shock strut attachment RH	1	FC
	or			
	42S1080-8	. FITTING ASSEMBLY, Shock strut attachment RH	1	FC
		Attaching Parts		
-38	AN7-15A	. BOLT	1	
-39	AN7-16A	. BOLT	1	
-40	NAS147-32	. BOLT	2	
	AN365-720	. NUT	4	
	AN960D716	. WASHER	8	
	AN960D716L	. WASHER	4	
	NAS143-7C	. WASHER	2	B
		———*———		
	42S1048-3	. . FITTING, LH	1	J,FB
	42S1080-3	. . FITTING, LH	1	FC
	or			
	42S1080-9	. . FITTING, LH	1	FC
	42S1048-4	. . FITTING, RH	1	J,FB
	42S1080-4	. . FITTING, RH	1	FC
	or			
	42S1080-10	. . FITTING, RH	1	FC
	NAS77-10-44	. . BUSHING	2	
	NAS77-14-44	. . BUSHING	2	
-41	MS15001-4	. . FITTING, Lubricator	1	J,FB
	MS15002-3	. . FITTING, Lubricator	1	FC

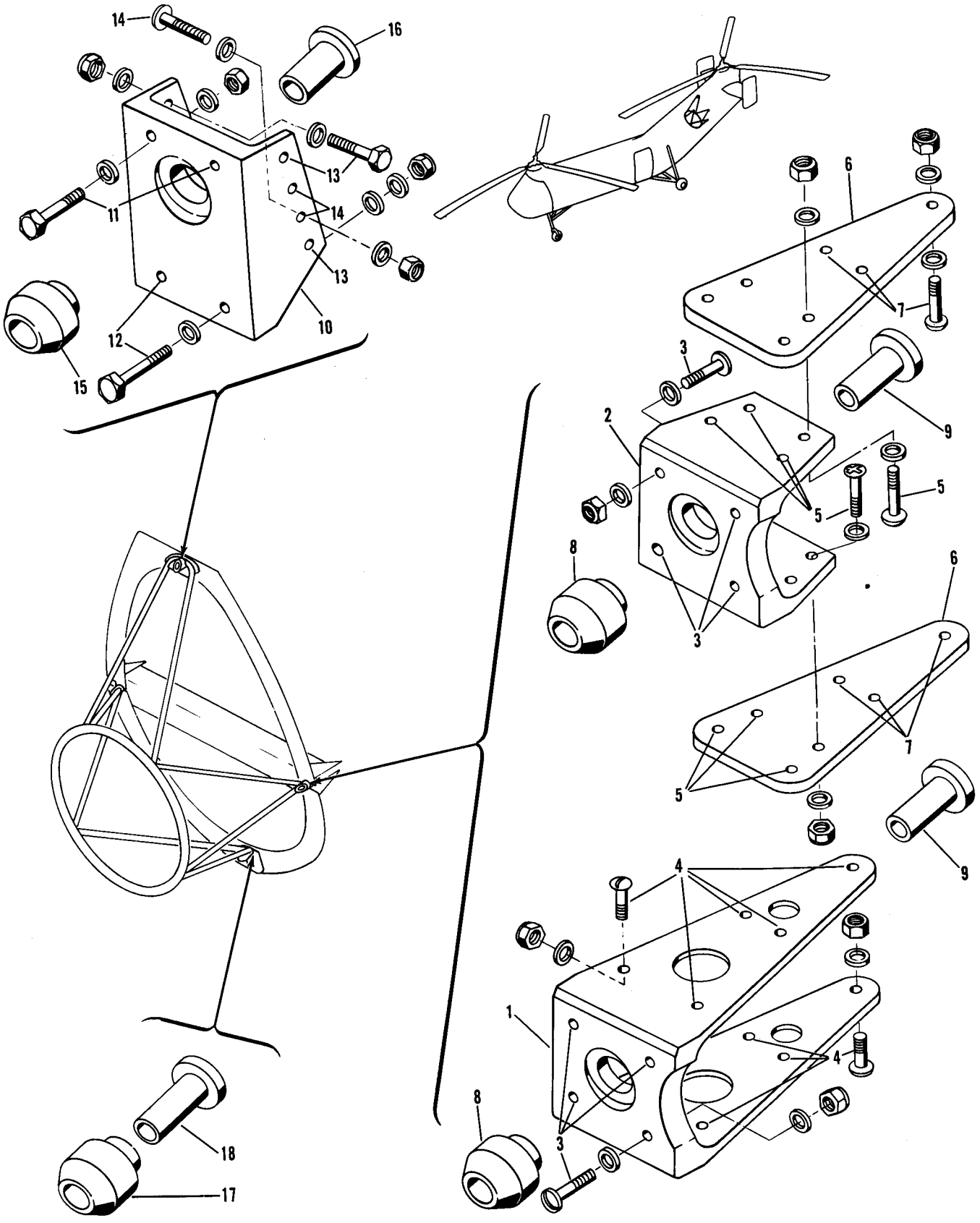

Figure 10. Engine Mount Attachment Fittings and Bushings

Figure and Index Number	Part Number	1 2 3 4 5 6 7 Description	Units per Assembly	Usable On Code
10-	22S7015-1	FRAME INSTALLATION, Canted sta 521.500 to 525.318, see fig. 7	Ref	J
	42S7015-1	FRAME INSTALLATION, Canted sta 521.500 to 525.318, see fig. 8	Ref	AU
	22S7015-2	. FRAME ASSEMBLY, See fig. 7	Ref	J
	42S7015-3	. FRAME ASSEMBLY, See fig. 8	Ref	AU
-1	22S3041-1	. . FITTING, Engine mount side attachment LH	1	J,AV
-2	22S3041-3	. . FITTING, Engine mount side attachment LH	1	I
	22S3041-2	. . FITTING, Engine mount side attachment RH	1	J,AV
	22S3041-4	. . FITTING, Engine mount side attachment RH	1	I
		Attaching Parts		
-3	AN525-10-18	. . SCREW	4	
-4	AN525-10-10	. . SCREW	10	J,AV
-5	AN525-416R12	. . SCREW	8	I
	or			
	AN4-6A	. . BOLT	8	I
	AN365-1032C	. . NUT	14	J,AV
	AN365-1032	. . NUT	4	I
	AN365-428	. . NUT	8	I
	AN960D10	. . WASHER	18	J,AV
	AN960D10	. . WASHER	4	I
	AN960D416	. . WASHER	8	I
	AN960D416L	. . WASHER	8	I
		———*———		
-6	42S7015-26	. . PLATE	4	I
		Attaching Parts		
-7	AN525-10R9	. . SCREW	3	I
	or			
	AN3-4A	. . BOLT	3	I
	AN365-1032	. . NUT	3	I
	AN960D10	. . WASHER	3	I
		———*———		
-8	22S3044-2	. . BUSHING	2	
-9	22S3045-2	. . BUSHING	2	
-10	22S3042-1	. . FITTING ASSEMBLY, Engine mount upper attachment	1	J
	42S3042-1	. . FITTING ASSEMBLY, Engine mount upper attachment	1	AU
		Attaching Parts		
-11	AN4-7A	. . BOLT	2	
-12	AN4-10A	. . BOLT	2	
-13	AN4-6A	. . BOLT	4	AU
-14	AN525-10R12	. . SCREW	4	AU
	AN525-10R12	. . SCREW	8	J
	AN365-428	. . NUT	4	J
	AN365-428	. . NUT	8	AU
	AN365-1032	. . NUT	8	J
	AN365-1032	. . NUT	4	AU
	AN960D416	. . WASHER	8	J
	AN960D416	. . WASHER	14	AU
	AN960D10	. . WASHER	8	
		———*———		
-15	22S3044-1	. . . BUSHING	1	
-16	22S3045-1	. . . BUSHING	1	
-17	22S3044-3	. . BUSHING	1	
-18	22S3045-3	. . BUSHING	1	

Structure

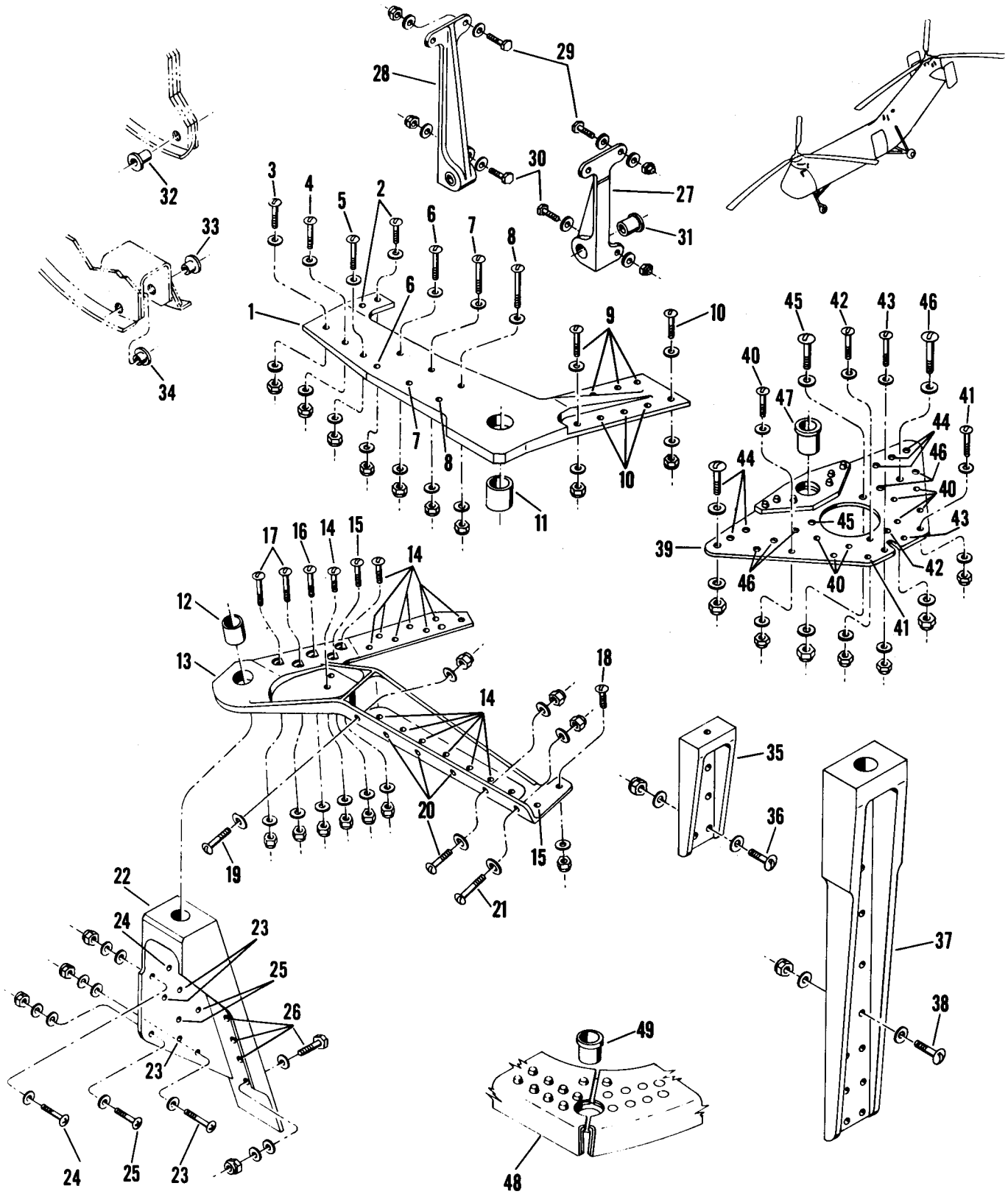

Figure 11. Transmission Supports

Figure and Index Number	Part Number	1 2 3 4 5 6 7 Description	Units per Assembly	Usable On Code
11-	22S5001-1	SUPPORT INSTALLATION, Fwd transmission, see fig. 7	Ref	J
	22S5001-9	SUPPORT INSTALLATION, Fwd transmission, see fig. 8	Ref	AV
	42S5001-1	SUPPORT INSTALLATION, Fwd transmission, see fig. 8	Ref	I
-1	22S5058-3	. FITTING, Torque LH	1	J,GL
	or			
	22S5058-1	. FITTING, Torque LH	1	J,GL
	22S5058-5	. FITTING, Torque LH	1	AO,GK
	22S5058-4	. FITTING, Torque RH	1	J,GL
	or			
	22S5058-2	. FITTING, Torque RH	1	J,GL
	22S5058-6	. FITTING, Torque RH	1	AO,GK
		Attaching Parts		
-2	AN23-9A	. BOLT	2	
-3	AN24-10A	. BOLT	1	
-4	AN24-11A	. BOLT	1	
-5	AN24-12A	. BOLT	1	
-6	AN24-13A	. BOLT	2	
-7	AN24-15A	. BOLT	2	
-8	AN24-16A	. BOLT	2	
-9	NAS464-4A-8	. BOLT	6	I
-10	NAS464-4A-7	. BOLT	4	I
	AN24-12A	. BOLT	10	J
	NAS464-4A-7	. BOLT	10	AV
	AN364-1032A	. NUT	2	
	AN364-428A	. NUT	19	
	AN960D10	. WASHER	2	
	AN960D10L	. WASHER	2	
	AN960D416	. WASHER	23	
	AN960D416L	. WASHER	15	
		———*———		
-11	22S5052-4	. BUSHING	2	
-12	22S5052-5	. BUSHING	2	
-13	22S1069-1	. PLATE, Lift fitting LH	1	
	or			
	22S5059-1	. PLATE, Lift fitting LH	1	
	22S1069-2	. PLATE, Lift fitting RH	1	
	or			
	22S5059-2	. PLATE, Lift fitting RH	1	
		Attaching Parts		
-14	AN23-9A	. BOLT	16	
-15	AN23-10A	. BOLT	2	
-16	AN23-11A	. BOLT	1	
-17	AN23-12A	. BOLT	2	
-18	AN23-8A	. BOLT	1	
-19	AN23-13A	. BOLT	1	
-20	AN23-10A	. BOLT	4	
-21	AN23-12A	. BOLT	1	
	AN364-1032	. NUT	28	
	AN960-10	. WASHER	6	
	AN960D10	. WASHER	22	
	AN960D10L	. WASHER	6	
		———*———		
	42C1787-1	. FITTING ASSEMBLY, Swash plate damper attachment outboard	1	II,JA
		Attaching Parts		
	AN4-11A	. BOLT	2	II,JA
	AN4-21A	. BOLT	2	II,JA
	AN365-428	. NUT	4	II,JA
	AN960D416	. WASHER	6	II,JA
		———*———		
	DSRP5	. BEARING (FAF)	1	II,JA
	42C1787-1	. FITTING ASSEMBLY, Swash plate damper attachment inboard	2	II,JA
		Attaching Parts		
	AN4-11A	. BOLT	4	II,JA

Figure and Index Number	Part Number	Description 1 2 3 4 5 6 7	Units per Assembly	Usable On Code
11-	AN365-428	. NUT	4	II,JA
	AN960D416	. WASHER	8	II,JA
		*—		
	DSRP5	. . BEARING (FAF)	1	II,JA
	22S7001-1	BULKHEAD INSTALLATION, Fwd transmission support, see fig. 7	Ref	J
	22S7001-106	BULKHEAD INSTALLATION, Fwd transmission support, see fig. 8	Ref	AV
	42S7001-1	BULKHEAD INSTALLATION, Fwd transmission support, see fig. 8	Ref	I
	22S7001-2	. BULKHEAD ASSEMBLY, See fig. 7	Ref	J
	22S7001-114	. BULKHEAD ASSEMBLY, See fig. 8	Ref	AV
	42S7001-2	. BULKHEAD ASSEMBLY, See fig. 8	Ref	I
-22	42S5051-1	. . FITTING, Lift LH	1	
	or			
	22S5043-1	. . FITTING, Lift LH	1	
	42S5051-2	. . FITTING, Lift RH	1	
	or			
	22S5043-2	. . FITTING, Lift RH	1	
		Attaching Parts		
-23	NAS221-11	. . SCREW	4	
-24	NAS221-12	. . SCREW	3	
-25	NAS221-13	. . SCREW	3	
-26	AN4-7A	. . BOLT	8	
	AN364-1032	. . NUT	10	
	AN365-428	. . NUT	8	
	AN960D10	. . WASHER	20	
	AN960D10L	. . WASHER	10	
	AN960D416	. . WASHER	16	
	AN960D416L	. . WASHER	8	
		*—		
	22S5002-1	SUPPORT INSTALLATION, Central transmission, see fig. 7	Ref	A
	22S5002-65	SUPPORT INSTALLATION, Central transmission, see fig. 7	Ref	P
	22S5082-1	SUPPORT INSTALLATION, Central transmission, see fig. 7	Ref	L
	42S5176-1	SUPPORTS INSTALLATION, Central transmission, see fig. 8	Ref	AV
	42S5084-1	SUPPORTS INSTALLATION, Central transmission, see fig. 8	Ref	GI
	42S5077-1	SUPPORTS INSTALLATION, Central transmission, see fig. 8	Ref	GJ
-27	22S5044-1	. FITTING ASSEMBLY, Central transmission support LH	1	A,P
	22S5044-9	. FITTING ASSEMBLY, Central transmission support LH	1	L,HJ
	or			
	22S5044-5	. FITTING ASSEMBLY, Central transmission support LH	1	L,HJ
	42S5117-13	. FITTING ASSEMBLY, Central transmission support LH	1	HI
-28	22S5044-2	. FITTING ASSEMBLY, Central transmission support RH	1	A.P
	22S5044-10	. FITTING ASSEMBLY, Central transmission support RH	1	L,HJ
	or			
	22S5044-6	. FITTING ASSEMBLY, Central transmission support RH	1	L,HJ
	42S5117-14	. FITTING ASSEMBLY, Central transmission support RH	1	HI
		Attaching Parts		
-29	AN3-5A	. BOLT	2	A,P
	AN173-7A	. BOLT	2	L,HJ
-30	AN4-6A	. BOLT	1	A,P
	AN174-11A	. BOLT	1	L,HJ
	AN175-11A	. BOLT	2	HI
	AN173-10A	. BOLT	2	HI
	AN365-1032	. NUT	2	
	AN365-428	. NUT	1	
	AN365-524	. NUT	2	HI
	AN960D10	. WASHER	4	
	AN960D416	. WASHER	1	
	AN960D416L	. WASHER	1	
	AN960D516	. WASHER	2	HI
		*—		
	22S5044-3	. . FITTING, LH	1	A,P
	22S5044-11	. . FITTING, LH	1	L,AU
	or			
	22S5044-7	. . FITTING, LH	1	L,AU
	22S5044-4	. . FITTING, RH	1	A,P

Figure and Index Number	Part Number	Description 1 2 3 4 5 6 7	Units per Assembly	Usable On Code
11-	22S5044-12	. . FITTING, RH	1	L,AU
	or			
	22S5044-8	. . FITTING, RH	1	L,AU
-31	22S5080-1	. . BUSHING	1	
-32	42S5222-1	. BUSHING (Used with cantilever type mount)	1	J,GM
-33	42S5076-1	. BUSHING (Used with straddle type mount)	1	GJ
-34	42S5074-1	. BUSHING (Used with straddle type mount)	1	GJ
	22S5003-1	SUPPORT INSTALLATION, Aft transmission, see fig. 7	Ref	J
	42S5003-1	SUPPORT INSTALLATION, Aft transmission, see fig. 8	Ref	AV
	42S5087-1	SUPPORT INSTALLATION, Aft transmission, see fig. 8	Ref	EJ
	42S5087-41	SUPPORT INSTALLATION, Aft transmission, see fig. 8	Ref	EK
	42S5087-54	SUPPORT INSTALLATION, Aft transmission, see fig. 8	Ref	EL
	42S5087-60	SUPPORT INSTALLATION, Aft transmission, see fig. 8	Ref	JD
	22S2049-1	. BRACKET INSTALLATION, Support LH	1	J,AV
	42S2049-1	. BRACKET INSTALLATION, Support LH	1	I
	22S2049-2	. BRACKET INSTALLATION, Support RH	1	J,AV
	42S2049-2	. BRACKET INSTALLATION, Support RH	1	I
	22S2049-3	. . BRACKET ASSEMBLY, LH	1	J,AV
	42S2049-3	. . BRACKET ASSEMBLY, LH	1	I
	22S2049-4	. . BRACKET ASSEMBLY, RH	1	J,AV
-35	42S2049-4	. . BRACKET ASSEMBLY, RH	1	I
	22S2050-2	. . . FITTING, Support	1	
	or			
	22S2050-1	. . . FITTING, Support	1	
		Attaching Parts		
-36	AN525-10-10	. . . SCREW	6	
	AN365-1032	. . . NUT	6	
	AN960D10	. . . WASHER	6	
	AN960D10L	. . . WASHER	6	
		***		
	22S5056-1	. SUPPORT INSTALLATION, Lift LH, see fig. 7	Ref	J
	42S5056-1	. SUPPORT INSTALLATION, Lift LH, see fig. 8	Ref	AU
	22S5056-2	. SUPPORT INSTALLATION, Lift RH, see fig. 7	Ref	J
	42S5056-2	. SUPPORT INSTALLATION, Lift RH, see fig. 8	Ref	AU
-37	22S5049-1	. . FITTING, Lift	1	J
	42S5049-1	. . FITTING, Lift	1	DJ

Figure and Index Number	Part Number	Description 1 2 3 4 5 6 7	Units per Assembly	Usable On Code
11-	42S5049-2	. . FITTING, Lift	1	DK
		Attaching Parts		
-38	AN525-10-10	. . SCREW	18	J
	AN525-416-11	. . SCREW	18	KD
	AN4-6	. . BOLT	18	HI,IL
	AN365-1032	. . NUT	18	J
	AN365-428	. . NUT	18	AU
	AN960D10	. . WASHER	36	J
	AN960D416	. . WASHER	36	AU
		———*———		
	22S5046-1	. DECK AND TRUSS INSTALLATION, Aft transmission	1	J
	42S5046-1	. DECK AND TRUSS INSTALLATION, Aft transmission	1	AV
	42S5209-1	. DECK AND TRUSS INSTALLATION, Aft transmission	1	I
-39	22S5050-2	. . FITTING, Lower	2	
		Attaching Parts		
-40	AN525-10-10	. . SCREW	8	J,AV
	ALPPH-T6-3	. . BOLT (HKM)	8	I
-41	AN525-10-11	. . SCREW	2	J,AV
	AN4-6	. . BOLT	2	I
-42	AN525-10-12	. . SCREW	2	J,AV
	ALPPH-T6-4	. . BOLT (HKM)	2	I
-43	AN525-10-12	. . SCREW	2	J,AV
	AN4-7	. . BOLT	2	I
-44	AN525-416-11	. . SCREW	6	J,AV
	ALPPH-T8-4	. . BOLT (HKM)	6	I
-45	AN525-416-12	. . SCREW	2	J,AV
	ALPPH-T6-5	. . BOLT (HKM)	2	I
-46	AN525-416-14	. . SCREW	6	J,AV
	ALPPH-T8-6	. . BOLT (HKM)	6	I
	AN365-1032	. . NUT	14	J,AV
	AN365-428	. . NUT	14	J,AV
	AN365-428	. . NUT	28	I
	AN960D10	. . WASHER	26	
	AN960D416	. . WASHER	20	J,AV
	AN960D416	. . WASHER	58	I
	AN960D10L	. . WASHER	2	
	AN960D416L	. . WASHER	8	
		———*———		
-47	22S5052-8	. BUSHING	2	J
	22S5052-11	. BUSHING	2	AU
-48	22S5045-1	. FRAME ASSEMBLY, Torque, see fig. 7	Ref	J
	42S5045-1	. FRAME ASSEMBLY, Torque, see fig. 8	Ref	AV
	42S5196-1	. FRAME ASSEMBLY, Torque, see fig. 8	Ref	I
	42S5196-6	. FRAME ASSEMBLY, Torque, see fig. 8	Ref	JD
-49	22S5052-9	. BUSHING	4	J
	22S5052-12	. BUSHING	4	AU
	42C1787-1	. FITTING ASSEMBLY, Swashplate damper attachment outboard	2	II,JA
		Attaching Parts		
	AN4-12	. BOLT	4	II,JA
	AN4-14	. BOLT	4	II,JA
	AN365-428	. NUT	4	II,JA
	AN960D416	. WASHER	8	II,JA
		———*———		
	DSRP5	. BEARING (FAF)	1	II,JA
	42C1794-2	. FITTING ASSEMBLY, Swashplate damper attachment inboard	1	II,JA
		Attaching Parts		
	AN365-820	. NUT	1	II,JA
	AN960D816	. WASHER	2	II,JA
		———*———		
	DSRP5	. . BEARING (FAF)	1	II,JA

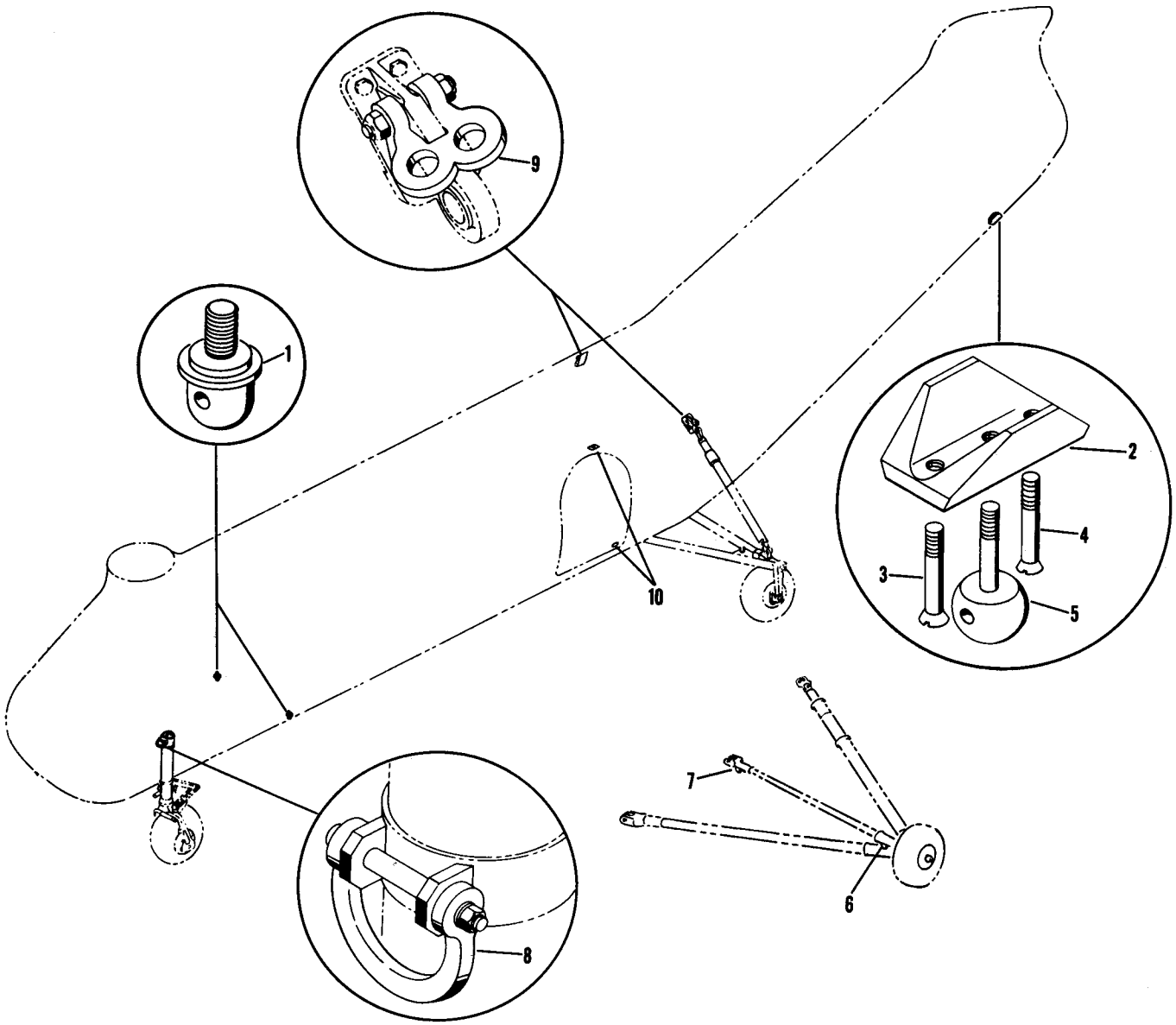

Figure 12. Tiedown Fittings, Jacking Pads and Leveling Lugs

Figure and Index Number	Part Number	Description 1 2 3 4 5 6 7	Units per Assembly	Usable On Code
12-	22S4053-1	PAD INSTALLATION, Jacking	1	J
	42S4053-1	PAD INSTALLATION, Fwd jacking	1	AU
	42S4053-3	PAD INSTALLATION, Aft jacking	1	HJ
	42S4053-5	PAD INSTALLATION, Aft jacking	1	HI
-1	22S4053-5	. BOLT	2	J
	42S4453-1	. BOLT	2	AU
	AN960D816	. WASHER	2	J
	PHS256-1-.016-1A	. WASHER (PHL)	2	AU
-2	22S4053-2	. FITTING, Sta 603.810	1	J,HJ
	42S4163-1	. FITTING, Sta 603.810	1	HI
		Attaching Parts		
-3	AN509-616-30	. SCREW	1	J,HJ
-4	AN509-616-32	. SCREW	1	J,HJ
	AN509-616R26	. SCREW	2	HI
	AN365-624	. NUT	2	
	AN960D616	. WASHER	2	
	42S4039-2	. WASHER	2	HI
		———*———		
-5	22S4053-3	. BOLT	1	
	AN364-820	. NUT	1	HI
	AN960D816	. WASHER	1	HI
	42S4455-1	. WASHER	1	AU
-6	42L1014-1	PAD, Outbd jack, see fig. 24	Ref	B
-7	42L1016-1	PAD, Inbd jack, see fig. 24	Ref	B
	22S4010-1	TIE-DOWN INSTALLATION, Aircraft	1	J
	42S4010-1	TIE-DOWN INSTALLATION, Aircraft	1	AV
	42S4010-2	TIE-DOWN INSTALLATION, Aircraft	1	I
-8	22S4081-2	. RING, Aux alighting gear mooring	1	
	or			
	22S4081-1	. RING, Aux alighting gear mooring	1	
		Attaching Parts		
	AN27-68	. BOLT	1	
	or			
	AN5-43	. BOLT	1	
	AN381-3-14	. PIN, Cotter (used with AN27-68)	1	
	AN381-2-10	. PIN, Cotter (used with AN5-43)	1	
	AN320-7	. NUT (Used with AN27-68)	1	
	AN310-5	. NUT (Used with AN5-43)	1	
	AN960-716	. WASHER (One under hd and one under nut, used with AN27-68)	2	
	AN960-716L	. WASHER (One under nut, used with AN27-68)	1	
	AN960-516	. WASHER (One under hd and two under nut, used with AN5-43)	3	
	NAS77-5-53	. BUSHING (Used with AN5-43)	2	
	NAS75-5-219	. BUSHING (Used with AN5-43)	1	
		———*———		
-9	22S4082-2	. RING, Hoist and tie-down	2	
	or			
	22S4082-1	. RING, Hoist and tie-down	2	
		Attaching Parts		
	AN310-34	. BOLT	1	
	AN381-4-20	. PIN, Cotter	1	
	AN310-10	. NUT	1	
	AN960D1016	. WASHER	1	
	AN960D1016L	. WASHER	1	
		———*———		
-10	22S4030-1	LEVELING PROVISION INSTALLATION	1	J
	42S4030-1	LEVELING PROVISION INSTALLATION	1	AU

Structure

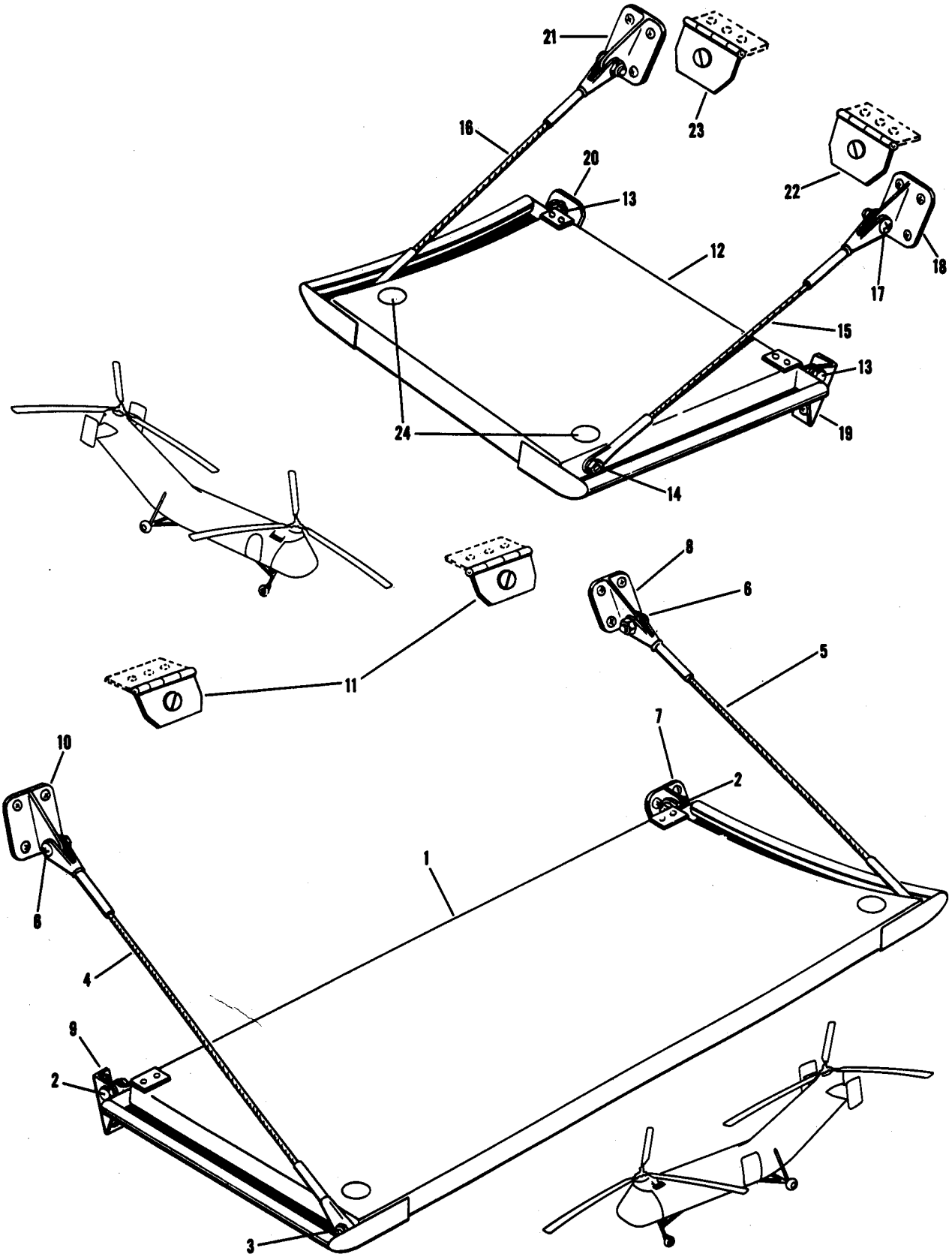

Figure 13. Work Platforms, YH-21, H-21A, H-21B and H-21C

Figure and Index Number	Part Number	Description 1 2 3 4 5 6 7	Units per Assembly	Usable On Code
13-	22S4083-1	PLATFORM INSTALLATION, Work LH	1	A,BP
	22S4083-404	PLATFORM INSTALLATION, Work LH	1	BQ
	22S4083-405	PLATFORM INSTALLATION, Work LH	1	AV
	42S4083-1	PLATFORM INSTALLATION, Work LH, see fig. 14	Ref	I
-1	22S4083-3	. PLATFORM ASSEMBLY, Work LH	1	J
	22S4083-101	. PLATFORM ASSEMBLY, Work LH	1	AV
	22S4083-406	. PLATFORM ASSEMBLY, Work LH	1	BQ
	22S4083-407	. PLATFORM ASSEMBLY, Work LH	1	AV
		Attaching Parts		
-2	AN24-9	. BOLT	2	
-3	AN4-7A	. BOLT	2	
	AN310-4	. NUT	4	
	AN380-2-2	. PIN, Cotter	2	
	AN381-2-10	. PIN, Cotter	2	
	AN960-416	. WASHER	2	
	AN960D416	. WASHER	6	
	AN960D416L	. WASHER	6	
		———*———		
-4	22S4083-5	. . CABLE ASSEMBLY, Fwd	1	
-5	22S4083-7	. . CABLE ASSEMBLY, Aft	1	
		Attaching Parts		
-6	AN525-10R10	. . SCREW	2	
	AN364-1032	. . NUT	2	
	AN960-10L	. . WASHER	4	
		———*———		
-7	22S4083-41	. FITTING, Hinge	1	
		Attaching Parts		
	AN525-10R10	. SCREW	1	
	AN525-10R13	. SCREW	1	
	AN525-10R9	. SCREW	2	
	AN364-1032	. NUT	2	
	AN365-1032	. NUT	2	
	AN960D10	. WASHER	4	
		———*———		
-8	22S4083-51	. FITTING, Cable	1	
		Attaching Parts		
	AN525-10R10	. SCREW	4	
	AN365-1032	. NUT	4	
	AN960D10	. WASHER	4	
		———*———		
-9	22S4083-57	. FITTING, Hinge	1	
		Attaching Parts		
	AN525-10R11	. SCREW	1	
	AN525-10R12	. SCREW	1	
		———*———		
-10	22S4083-43	. FITTING, Cable	1	
		Attaching Parts		
	AN525-10R10	. SCREW	4	
	AN365-1032	. NUT	4	
	AN960D10	. WASHER	4	
		———*———		
-11	22S4084-408	. HINGE, Half	2	
		Attaching Parts		
	AN253-2-200	. PIN	1	
		———*———		
	4002-4	. STUD (CLC)	2	
	4002-N	. GROMMET (CLC)	2	
	50834	. BUTTON, Plug (UC)	2	
	22S4084-1	PLATFORM INSTALLATION, Work RH	1	A,BP
	22S4084-401	PLATFORM INSTALLATION, Work RH	1	BQ
	22S4084-402	PLATFORM INSTALLATION, Work RH	1	AV
	22S4084-400	PLATFORM INSTALLATION, Work RH	1	AV
	42S4084-1	PLATFORM INSTALLATION, Work RH, see fig. 14	Ref	I

Figure and Index Number	Part Number	Description 1 2 3 4 5 6 7	Units per Assembly	Usable On Code
13-12	22S4084-3	. PLATFORM ASSEMBLY, Work RH	1	J
	22S4084-101	. PLATFORM ASSEMBLY, Work RH	1	AV
	22S4084-403	. PLATFORM ASSEMBLY, Work RH	1	BQ
	22S4084-404	. PLATFORM ASSEMBLY, Work RH	1	AV
		Attaching Parts		
-13	AN24-9	. BOLT	2	
-14	AN4-7A	. BOLT	2	
	AN310-4	. NUT	4	
	AN380-2-2	. PIN, Cotter	2	
	AN960-416	. WASHER	2	
	AN960D416	. WASHER	6	
	AN960D416L	. WASHER	6	
		———*———		
-15	22S4083-5	. . CABLE ASSEMBLY, Fwd	1	
-16	22S4084-5	. . CABLE ASSEMBLY, Aft	1	
		Attaching Parts		
-17	AN525-10R10	. . SCREW	2	
	AN364-1032	. . NUT	2	
	AN960-10L	. . WASHER	4	
		———*———		
-18	22S4083-44	. FITTING, Cable	1	
		Attaching Parts		
	AN525-10R10	. SCREW	4	
	AN365-1032	. NUT	4	
	AN960D10	. WASHER	4	
		———*———		
-19	22S4083-58	. FITTING, Hinge	1	
		Attaching Parts		
	AN525-10R11	. SCREW	1	
	AN525-10R12	. SCREW	1	
		———*———		
-20	22S4084-29	. FITTING, Hinge	1	J
■	42S8435-1	. FITTING, Hinge	1	AV
		Attaching Parts		
	AN525-10R10	. SCREW	1	J
	AN525-10R9	. SCREW	1	J
	AN509-10R12	. SCREW	1	J
	AN525-10R10	. SCREW	2	AV
	AN525-10R11	. SCREW	1	AV
	AN365-1032	. NUT	3	
	AN960D10	. WASHER	3	
		———*———		
-21	22S4083-51	. FITTING, Cable	1	
		Attaching Parts		
	AN525-10R9	. SCREW	4	
	AN365-1032	. NUT	4	
	AN960D10	. WASHER	4	
		———*———		
-22	22S4084-407	. HINGE, Fwd half	1	
-23	22S4084-408	. HINGE, Aft half	1	
		Attaching Parts		
	AN253-2-200	. PIN	1	
	AN253-2-250	. PIN	1	
		———*———		
	4002-4	. STUD (CLC)	2	
	4002-N	. GROMMET (CLC)	2	
-24	50834	. BUTTON, Plug (UC)	2	

Structure

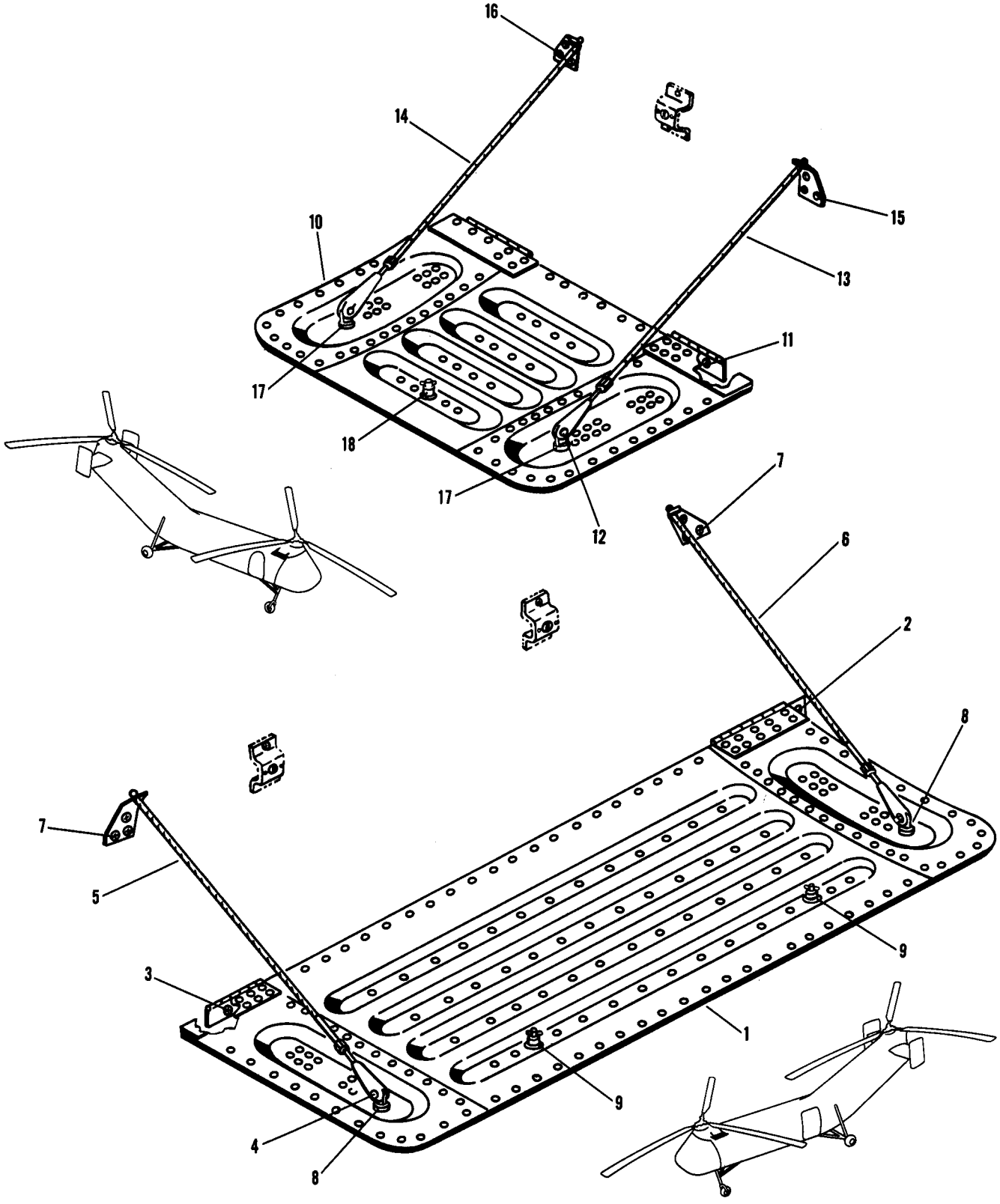

Figure 14. Work Platforms, H-21B and H-21C

Figure and Index Number	Part Number	Description 1 2 3 4 5 6 7	Units per Assembly	Usable On Code
14-	22S4083-405	PLATFORM INSTALLATION, Work LH, see fig. 13	Ref	AV
	42S4083-1	PLATFORM INSTALLATION, Work LH	1	I
-1	42S4083-2	. PLATFORM ASSEMBLY, Work LH	1	I
		Attaching Parts		
-2	AN525-10R12	. SCREW	3	I
-3	AN525-10R11	. SCREW	3	I
-4	AN393-15	. PIN, Flat hd	2	I
	AN365-1032	. NUT	6	I
	AN381-2-8	. PIN, Cotter	2	I
	AN960D10L	. WASHER	12	I
	AN960-10L	. WASHER	2	I
		———*———		
-5	42S4059-1	. . CABLE ASSEMBLY, Fwd	1	I
-6	42S4059-2	. . CABLE ASSEMBLY, Aft	1	I
		Attaching Parts		
-7	AN509-10R12	. . SCREW	3	I
	AN365-1032	. . NUT	3	I
	AN960D10L	. . WASHER	3	I
		———*———		
-8	AN43-7A	. . BOLT, Eye	2	I
	22K1-048	. . NUT, Cap (EN)	2	I
	AN960D416	. . WASHER	4	I
-9	4002-14	. . STUD (CLC)	2	I
	R4G	. . RING, Snap (CLC)	2	I
	4002-0	. . GROMMET (CLC)	2	I
	22S4084-401	PLATFORM INSTALLATION, Work RH, see fig. 13	Ref	AV
	42S4084-1	PLATFORM INSTALLATION, Work RH	1	I
-10	42S4084-2	. PLATFORM ASSEMBLY, Work RH	1	I
		Attaching Parts		
-11	AN525-10R11	. SCREW	6	I
-12	AN393-15	. PIN, Flat hd	2	I
	AN365-1032	. NUT	6	I
	AN381-2-8	. PIN, Cotter	2	I
	AN960D10L	. WASHER	12	I
	AN960-10L	. WASHER	2	I
		———*———		
-13	42S4059-3	. . CABLE ASSEMBLY, Fwd	1	I
-14	42S4059-4	. . CABLE ASSEMBLY, Aft	1	I
		Attaching Parts		
-15	AN509-10R11	. . SCREW	3	I
-16	AN509-10R12	. . SCREW	3	I
	AN365-1032	. . NUT	6	I
	AN960D10L	. . WASHER	6	I
		———*———		
-17	AN43-7A	. . BOLT, Eye	2	I
	22K1-048	. . NUT, Cap (EN)	2	I
	AN960D416	. . WASHER	4	I
-18	4002-14	. . STUD (CLC)	1	I
	R4G	. . RING, Snap (CLC)	1	I
	4002-0	. . GROMMET (CLC)	1	I

Structure

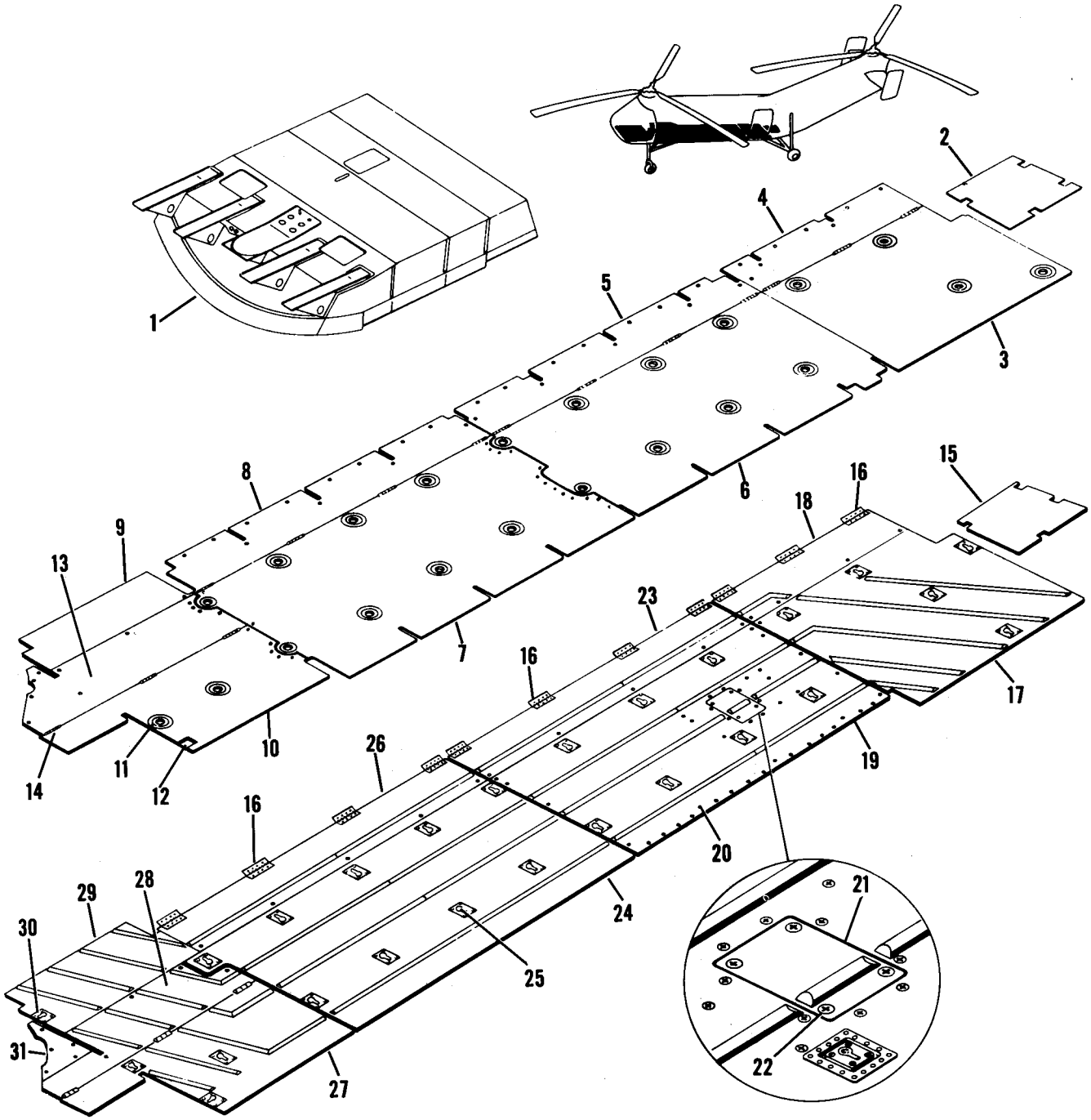

Figure 15. Cabin and Cockpit Flooring

Figure and Index Number	Part Number	Description 1 2 3 4 5 6 7	Units per Assembly	Usable On Code
15-1	22S7026-162	FLOOR INSTALLATION, Cockpit	1	J
	22S7026-149	FLOOR INSTALLATION, Cockpit	1	AP
	42S7026-1	FLOOR INSTALLATION, Cockpit	1	BU,AO
	42S9543-1	FLOOR INSTALLATION, Cockpit	1	DR,GG
	42S9543-237	FLOOR INSTALLATION, Cockpit	1	DS,EH
	22S7019-1	FLOOR INSTALLATION, Cabin wood	1	A
	22S7032-1	FLOOR INSTALLATION, Cabin metal	1	E
-2	22S7019-3	. PANEL ASSEMBLY, Floor	1	A
	22S7199-1	. FLOOR ASSEMBLY, Sta 359.975 to 377.560	1	E
		Attaching Parts		
	AN525-10R20	. SCREW	10	A
	AN525-10R20	. SCREW	8	E
	AN525-10R22	. SCREW	2	E
	AN960D10L	. WASHER (Under hd)	10	J
		———*———		
-3	22S7019-5	. PANEL ASSEMBLY, Floor	1	A
	22S7198-3	. PANEL ASSEMBLY, Floor	1	E
		Attaching Parts		
	AN525-10R20	. SCREW	13	A
	AN525-10R24	. SCREW	5	A
	AN525-10R20	. SCREW	18	E
	22S7019-371	. WASHER	5	A
	AN960D10L	. WASHER	18	J
		———*———		
	AN7516-1	. . FITTING, Cargo tie-down	4	J
-4	22S7019-7	. PANEL ASSEMBLY, Floor	1	A
	22S7198-5	. PANEL ASSEMBLY, Floor	1	E
		Attaching Parts		
	AJ4-120	. FASTENER (DZ)	8	J
	GSA-4-T813	. GROMMET (DZ)	8	J
		———*———		
-5	22S7019-9	. PANEL ASSEMBLY, Floor	1	A
	22S7197-5	. PANEL ASSEMBLY, Floor	1	E
		Attaching Parts		
	AJ4-120	. FASTENER (DZ)	12	J
	GSA-4-T813	. GROMMET (DZ)	12	J
		———*———		
-6	22S7019-11	. PANEL ASSEMBLY, Floor	1	A
	22S7197-3	. PANEL ASSEMBLY, Floor	1	E
		Attaching Parts		
	AN525-10R20	. SCREW	28	A
	AN525-10R24	. SCREW	10	A
	AN525-10R20	. SCREW	35	E
	22S7019-371	. WASHER	10	A
	AN960D10L	. WASHER	38	A
	AN960D10L	. WASHER	35	E
		———*———		
	AN7516-1	. . FITTING, Cargo tie-down	8	J
-7	22S7019-13	. PANEL ASSEMBLY, Floor	1	A
	22S7196-3	. PANEL ASSEMBLY, Floor	1	E
		Attaching Parts		
	AN525-10R20	. SCREW	38	A
	AN525-10R24	. SCREW	9	A
	AN525-10R20	. SCREW	32	E
	AN525-10R18	. SCREW	6	E
	AN525-10R22	. SCREW	7	E
	22S7019-371	. WASHER	9	A
	AN960D10L	. WASHER	47	A
	AN960D10L	. WASHER	45	E
		———*———		
	AN7516-1	. . FITTING, Cargo tie-down	8	J

Figure and Index Number	Part Number	Description 1 2 3 4 5 6 7	Units per Assembly	Usable On Code
15-8	22S7019-15	. PANEL ASSEMBLY, Floor	1	A
	22S7196-5	. PANEL ASSEMBLY, Floor	1	E
		Attaching Parts		
	AJ4-120	. FASTENER (DZ)	12	J
	GSA-4-T813	. GROMMET (DZ)	12	J
		———*———		
-9	22S7019-17	. PANEL ASSEMBLY, Floor	1	A
	22S7149-1	. FLOOR ASSEMBLY, RH sta 119.500 to 159.500	1	E
		Attaching Parts		
	AN525-10R20	. SCREW	6	A
	AN525-10R20	. SCREW	3	E
	AN525-10R22	. SCREW	3	E
	AN960D10L	. WASHER	6	J
		———*———		
-10	22S7019-19	. PANEL ASSEMBLY, Floor	1	A
	22S7195-3	. PANEL ASSEMBLY, Floor	1	E
		Attaching Parts		
	AN525-10R20	. SCREW	13	A
	AN525-10R24	. SCREW	2	A
	AN525-10R14	. SCREW	1	E
	AN525-10R18	. SCREW	3	E
	AN525-10R20	. SCREW	5	E
	AN525-10R22	. SCREW	7	E
	22S7019-371	. WASHER	2	A
	AN960D10L	. WASHER	15	A
	AN960D10L	. WASHER	16	E
		———*———		
-11	AN7516-1	. . FITTING, Cargo tie-down	2	J
-12	22S7019-368	. . COVER	1	A
	22S7195-401	. . COVER	1	E
-13	22S7195-5	. PANEL ASSEMBLY, Floor	1	J
		Attaching Parts		
	AJ4-120	. FASTENER (DZ)	11	J
	GSA-4-T813	. GROMMET (DZ)	11	J
		———*———		
-14	AN257HP4-400	. . HINGE, Half (used with index numbers 3, 4, 10, and 13)	3	
		Attaching Parts		
	AN253-2-400	. . PIN, Hinge	1	
	AN550-8R5	. . SCREW	3	
		———*———		
	AN257HP4-400	. . HINGE, Half (used with index numbers 5, 6, 7, and 8)	4	
	42S7019-3	PANEL INSTALLATION, Aft cabin floor	1	AU
-15	42S7199-1	. PANEL ASSEMBLY, Floor sta 359.800 to 377.560	1	AU
		Attaching Parts		
	AN525-10R22	. SCREW	9	AU
	AN960D10L	. WASHER	9	AU
		———*———		
	42S7019-1	PANEL INSTALLATION, Fwd cabin floor	1	ED
	42S7019-53	PANEL INSTALLATION, Fwd cabin floor	1	DU
-16	42S9328-1	. HINGE, Half	11	AU
		Attaching Parts		
	42S7019-52	. PIN, Hinge	11	JE
	42S7019-54	. PIN, Hinge	11	JF
		———*———		
-17	42S7198-35	. PANEL ASSEMBLY, Floor	1	AU
	or			
	42S7198-3	. PANEL ASSEMBLY, Floor	1	AU
		Attaching Parts		
	AN525-10R22	. SCREW	18	AU
	NAS514P-1032-22	. SCREW	8	ED
	AN526-1032R22	. SCREW	8	ED
	AN509-416R22	. SCREW	11	HJ

Figure and Index Number	Part Number	1 2 3 4 5 6 7 Description	Units per Assembly	Usable On Code
15-	AN525-416R20	. SCREW	11	HI
	AN960D10L	. WASHER	18	AU
		———*———		
	1483	. . FITTING, Cargo tie-down (RHW) (used with 42S7198-3)	5	AU
	SP-2220	. . FITTING, Cargo tie-down (ESRC) (used with 42S7198-35)	5	AU
-18	42S7198-33	. PANEL ASSEMBLY, Hinged	1	AU
	or			
	42S7198-5	. PANEL ASSEMBLY, Hinged	1	AU
		Attaching Parts		
	FJ5-100	. FASTENER (DZ)	3	AU
	FJ5-120	. FASTENER (DZ)	1	AU
	GSF5-120	. GROMMET (DZ)	4	AU
		———*———		
	42S9328-1	. . HINGE, Half	3	AU
-19	42S7197-43	. PANEL ASSEMBLY, Floor	1	AU
	or			
	42S7197-3	. PANEL ASSEMBLY, Floor	1	AU
		Attaching Parts		
	AN509-416R22	. SCREW	14	HJ
	AN525-416R20	. SCREW	14	HI
	NAS514P-1032-22	. SCREW	25	ED
	NAS514P-1032R22	. SCREW	25	DU
-20	AN525-10R22	. SCREW	18	AU
	AN960D10	. WASHER	14	AU
	AN960D10L	. WASHER	4	AU
		———*———		
	42S9328-1	. . HINGE, Half	4	AU
-21	42S7197-41	. . PANEL ASSEMBLY, Door (used with 42S7197-43)	1	
	42S7197-7	. . PANEL ASSEMBLY, Door (used with 42S7197-3)	1	
		Attaching Parts		
-22	FJ5-100	. . FASTENER (DZ)	4	AU
	GSF5-T-600	. . GROMMET (DZ)	4	AU
		———*———		
	1483	. . FITTING, Cargo tie-down (RHW) (used with 42S7197-3)	7	AU
	SP-2220	. . FITTING, Cargo tie-down (ESRC) (used with 42S7197-41)	7	AU
-23	42S7197-39	. PANEL ASSEMBLY, Hinged	1	AU
	or			
	42S7197-5	. PANEL ASSEMBLY, Hinged	1	AU
		Attaching Parts		
	FJ5-100	. FASTENER (DZ)	2	AU
	FJ5-110	. FASTENER (DZ)	2	AU
	FJ5-120	. FASTENER (DZ)	1	AU
	GSF5-T-600	. GROMMET (DZ)	5	AU
		———*———		
	42S9328-1	. . HINGE, Half	4	AU
-24	42S7196-29	. PANEL ASSEMBLY, Floor	1	AU
	or			
	42S7196-3	. PANEL ASSEMBLY, Floor	1	AU
		Attaching Parts		
	AN509-416R22	. SCREW	18	HJ
	AN525-416R20	. SCREW	18	HJ
	AN525-10R22	. SCREW	21	AU
	NAS514P-1032-22	. SCREW	6	ED
	AN526-1032R22	. SCREW	6	DU
	AN960D10	. WASHER	16	AU
	AN960D10L	. WASHER	5	AU
		———*———		
-25	1483	. . FITTING, Cargo tie-down (RHW) (used with 42S7196-3)	9	AU
	SP-2220	. . FITTING, Cargo tie-down (ESRC) (used with 42S7196-29)	9	AU
-26	42S7196-27	. PANEL ASSEMBLY, Hinged	1	AU
	or			
	42S7196-5	. PANEL ASSEMBLY, Hinged	1	AU

Figure and Index Number	Part Number	1 2 3 4 5 6 7 Description	Units per Assembly	Usable On Code
		Attaching Parts		
15-	FJ5-100	. FASTENER (DZ)	4	AU
	FJ5-110	. FASTENER (DZ)	1	AU
	GSF5-T-600	. GROMMET (DZ)	5	AU
		———*———		
	42S9328-1	. . HINGE, Half	4	AU
-27	42S7195-44	. PANEL ASSEMBLY, Hinged	1	AU
	or			
	42S7195-3	. PANEL ASSEMBLY, Hinged	1	AU
		Attaching Parts		
	AN509-416R22	. SCREW	6	HJ
	AN525-416R20	. SCREW	6	HI
	AN525-10R22	. SCREW	10	AU
	NAS514P-1032-22	. SCREW	5	ED
	AN526-1032R22	. SCREW	5	DU
	AN960D10	. WASHER	8	AU
	AN960D10L	. WASHER	2	AU
		———*———		
	42S7195-36	. . HINGE, Half	3	AU
		Attaching Parts		
	42S7195-37	. . PIN, Hinge	1	
	AN550-8R5	. . SCREW	3	
		———*———		
▌	1483	. . FITTING, Cargo tie-down (RHW) (used with 42S7195-3)	3	AU
	SP-2220	. . FITTING, Cargo tie-down (ESRC) (used with 42S7195-44)	3	AU
-28	42S7195-35	. PANEL ASSEMBLY, Hinged	1	AU
	or			
	42S7195-5	. PANEL ASSEMBLY, Hinged	1	AU
		Attaching Parts		
	FJ5-100	. FASTENER (DZ)	2	AU
	FJ5-110	. FASTENER (DZ)	5	EM
	FJ5-110	. FASTENER (DZ)	2	EH,EI
	FJ5-120	. FASTENER (DZ)	2	AU
	GSF5-T-600	. GROMMET (DZ)	9	EM
	GSF5-T-600	. GROMMET (DZ)	6	EH,EI
		———*———		
	42S7195-36	. . HINGE, Half	3	AU
		Attaching Parts		
	42S7195-37	. . PIN, Hinge	1	
	AN550-8R5	. . SCREW	3	
		———*———		
-29	42S7195-42	. PANEL ASSEMBLY, Floor	1	AU
	or			
	42S7195-7	. PANEL ASSEMBLY, Floor	1	AU
		Attaching Parts		
	AN509-416R22	. SCREW	2	AU
	AN525-10R22	. SCREW	12	AU
	NAS514P-1032-22	. SCREW	3	AU
	AN960D10L	. WASHER	12	AU
		———*———		
▌ -30	SP-2220	. . FITTING, Cargo tie-down (ESRC) (used with 42S7195-42)	1	AU
	1483	. . FITTING, Cargo tie-down (RHW) (used with 42S7195-7)	1	AU
	42S7950-1	PANEL INSTALLATION, Floor RH sta 119.500	1	AV
	42S7950-2	PANEL INSTALLATION, Floor RH sta 119.500	1	AM,DR
	42S7907-7	PANEL INSTALLATION, Floor RH sta 119.500	1	JG
	42S7907-1	PANEL INSTALLATION, Floor RH sta 119.500	1	DS
-31	42S7944-1	. PANEL ASSEMBLY, Floor RH sta 119.500	1	C,DT
	42S7908-10	. PANEL ASSEMBLY, Floor RH sta 119.500	1	JG
	42S7908-1	. PANEL ASSEMBLY, Floor RH sta 119.500	1	DS

Structure

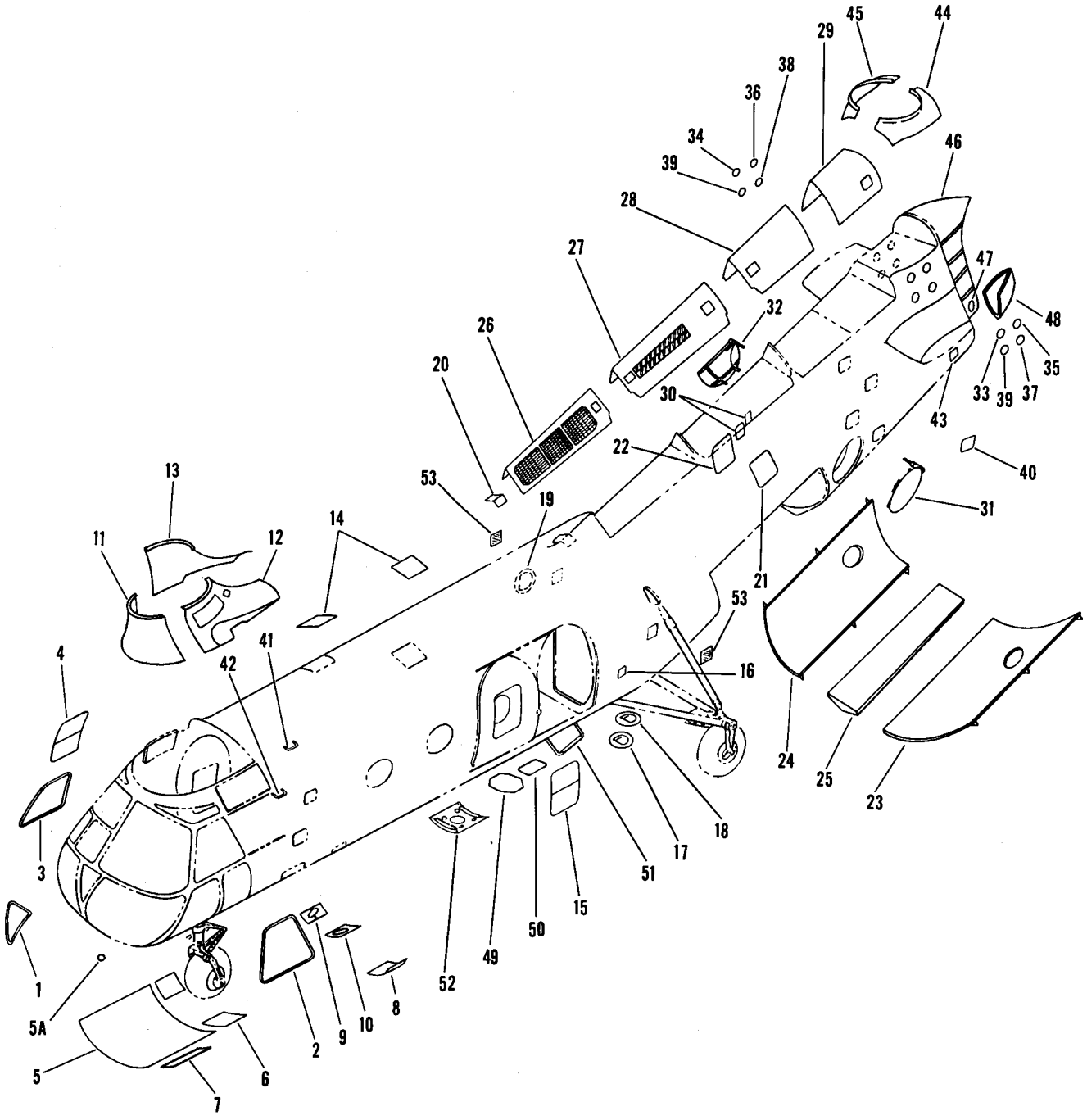

Figure 16. Access Doors and Panels

Figure and Index Number	Part Number	Description 1 2 3 4 5 6 7	Units per Assembly	Usable On Code
16-1	22S8002-5	DOOR ASSEMBLY, Access, see fig. 17	Ref	
-2	22S8004-3	PANEL ASSEMBLY, Co-pilot's sliding window, see fig. 17	Ref	
	22S8004-153	PANEL ASSEMBLY, Co-pilot's sliding window, see fig. 17	Ref	
-3	22S8004-4	PANEL ASSEMBLY, Pilot's sliding window, see fig. 17	Ref	
	22S8004-154	PANEL ASSEMBLY, Pilot's sliding window, see fig. 17	Ref	
-4	22S8015-69	WINDOW, Rescue door, see fig. 18	Ref	
-5	22S8005-22	PANEL ASSEMBLY, Lower controls access	1	J
	or			
	22S8005-1	PANEL ASSEMBLY, Lower controls access	1	J
	42S8061-1	PANEL ASSEMBLY, Lower controls access	1	AU
	or			
	42S8061-10	PANEL ASSEMBLY, Lower controls access	1	AU
		Attaching Parts		
	A5-35	FASTENER (DZ)	33	
	A5-40	FASTENER (DZ)	6	
	GA5-312	GROMMET (DZ)	39	
		———*———		
-5A	NAS451-21	BUTTON, Plug	1	
-6	22S8044-1	COVER ASSEMBLY, Lower controls access LH	1	J
	22S8044-2	COVER ASSEMBLY, Lower controls access RH	1	J
		Attaching Parts		
	A5-35	FASTENER (DZ)	6	
	A5-40	FASTENER (DZ)	3	
	A5-30	FASTENER (DZ)	3	
	GA5-312	GROMMET (DZ)	12	
		———*———		
-7	22S8044-30	COVER ASSEMBLY, Lower controls access	1	J,HL
	22S8044-103	COVER ASSEMBLY, Lower controls access	1	EM
-8	22S4054-1	DOOR ASSEMBLY, Hyd test outlet access	1	J
	42S4054-1	DOOR ASSEMBLY, Hyd test outlet access	1	AU
		Attaching Parts		
	5-0-140	FASTENER (LFK)	6	J
	A55-40	FASTENER (DZ)	7	AU
	5-0-240	FASTENER (LFK)	2	J
	A55-50	FASTENER (DZ)	2	AU
	GOS-5-93	GROMMET (LFK)	8	J
	GA5-312	GROMMET (DZ)	9	AU
		———*———		
-9	22S8030-9	FAIRING, Forward v-strut cutout LH	1	A
	22S8030-411	FAIRING, Forward v-strut cutout LH	1	B
	22S8030-10	FAIRING, Forward v-strut cutout RH	1	A
	22S8030-412	FAIRING, Forward v-strut cutout RH	1	B
-10	22S8030-11	FAIRING, Aft v-strut cutout LH	1	A
	22S8030-413	FAIRING, Aft v-strut cutout LH	1	B
	22S8030-12	FAIRING, Aft v-strut cutout RH	1	A
	22S8030-414	FAIRING, Aft v-strut cutout RH	1	B
		Attaching Parts		
	AN530-8-6	SCREW	9	
	NAS395-14-1	NUT	9	
	AN960D8	WASHER	9	
		———*———		
-11	22S8020-3	COWLING ASSEMBLY, Fwd	1	J
	22S8020-201	COWLING ASSEMBLY, Fwd	1	AU
		Attaching Parts		
	42S8092-59	FASTENER ASSEMBLY	18	
		———*———		

Figure and Index Number	Part Number	Description 1 2 3 4 5 6 7	Units per Assembly	Usable On Code
16-12	22S8020-5	COWLING ASSEMBLY, LH	1	J
	22S8020-203	COWLING ASSEMBLY, LH	1	AU
		Attaching Parts		
	42S8092-59	FASTENER ASSEMBLY	17	
	AJ5-50	FASTENER (DZ)	7	
	GA5-312	GROMMET (DZ)	7	
		———*———		
	22S8020-408	. DOOR ASSEMBLY	1	
		Attaching Parts		
	AJ5-50	. FASTENER (DZ)	4	
	GA5-312	. GROMMET (DZ)	4	
		———*———		
	22S8020-11	. DOOR ASSEMBLY	1	
		Attaching Parts		
	AJ5-50	. FASTENER (DZ)	17	
	GA5-312	. GROMMET (DZ)	17	
		———*———		
-13	22S8020-7	COWLING ASSEMBLY, RH	1	J
	22S8020-205	COWLING ASSEMBLY, RH	1	AU
		Attaching Parts		
	42S8092-59	FASTENER ASSEMBLY	23	
	AJ5-50	FASTENER (DZ)	7	
	GA5-312	GROMMET (DZ)	7	
		———*———		
	22S8020-12	. DOOR ASSEMBLY	1	
		Attaching Parts		
	AJ5-50	. FASTENER (DZ)	17	
	GA5-312	. GROMMET (DZ)	17	
		———*———		
	22S8164-1	PANEL INSTALLATION, Escape LH	1	J
	22S8164-35	PANEL INSTALLATION, Escape LH	1	AV
	42S8164-1	PANEL INSTALLATION, Escape LH	1	I
	22S8164-2	PANEL INSTALLATION, Escape RH	1	J
	22S8164-36	PANEL INSTALLATION, Escape RH	1	AV
	42S8164-2	PANEL INSTALLATION, Escape RH	1	I
-14	22S8163-1	. PANEL ASSEMBLY, Escape	1	J
	42S8163-1	. PANEL ASSEMBLY, Escape LH	1	AU
	42S8163-2	. PANEL ASSEMBLY, Escape RH	1	AU
	22S8015-3	. STRAP ASSEMBLY	2	JL
	42S8417-1	. STRAP	2	JM
	22S8164-31	. SEAL	2	J,AV
	42S8473-69	. SEAL	2	I
	22S8164-33	. STRIP, Filler	2	J,AV
	42S8473-68	. STRIP, Filler	2	I
-15	22S8015-69	WINDOW, Cabin door, see fig. 18	Ref	
-16	22S4305-1	DOOR INSTALLATION, Power receptacle	1	J
	42S4305-1	DOOR INSTALLATION, Power receptacle	1	AU
	22S4305-3	. HINGE ASSEMBLY	1	J
	42S4445-1	. HINGE ASSEMBLY	1	AU
	22S4305-9	. DOOR	1	J
	42S4443-1	. DOOR	1	AU
-17	22S8066-1	DOOR ASSEMBLY, Sta 378.190	1	
		Attaching Parts		
	A3-25	FASTENER (DZ)	5	
	A3-40	FASTENER (DZ)	1	
	GA3-175	GROMMET (DZ)	6	
		———*———		
-18	22S8067-1	DOOR ASSEMBLY, Sta 393.718	1	
		Attaching Parts		
	A3-20	FASTENER (DZ)	6	
	A3-35	FASTENER (DZ)	2	
	GA3-175	GROMMET (DZ)	8	
		———*———		

Figure and Index Number	Part Number	Description 1 2 3 4 5 6 7	Units per Assembly	Usable On Code
16-19	22S3117-1	GUARD AND DOOR ASSEMBLY, See fig. 32	Ref	
	42S3117-1	GUARD AND DOOR ASSEMBLY, See fig. 32	Ref	
-20	22S8032-3	DOOR ASSEMBLY, Sta 407.833	1	
		Attaching Parts		
	AN525-10R9	SCREW	18	
	AN960D10L	WASHER	18	
		———*———		
-21	22S8176-1	DOOR ASSEMBLY, Rocker box access LH	1	J
	42S8176-1	DOOR ASSEMBLY, Rocker box access LH	1	AV
	42S8176-3	DOOR ASSEMBLY, Rocker box access LH	1	I
-22	22S8176-2	DOOR ASSEMBLY, Rocker box access RH	1	J
	42S8176-2	DOOR ASSEMBLY, Rocker box access RH	1	AV
	42S8176-4	DOOR ASSEMBLY, Rocker box access RH	1	J
-23	22S3002-5	DOOR AND LATCH INSTALLATION, LH, see fig. 19	Ref	
	22S3002-101	DOOR AND LATCH INSTALLATION, LH, see fig. 19	Ref	
	22S3002-103	DOOR AND LATCH INSTALLATION, LH, see fig. 19	Ref	
-24	22S3002-6	DOOR AND LATCH INSTALLATION, RH, see fig. 19	Ref	
	22S3002-102	DOOR AND LATCH INSTALLATION, RH, see fig. 19	Ref	
	22S3002-104	DOOR AND LATCH INSTALLATION, RH, see fig. 19	Ref	
-25	22S8013-1	KEEL INSTALLATION, Removable, see fig. 19	Ref	
	22S8013-101	KEEL INSTALLATION, Removable, see fig. 19	Ref	
-26	22S8003-3	FAIRING ASSEMBLY, Dorsal	1	J
	42S8003-3	FAIRING ASSEMBLY, Dorsal	1	AU
	22S8025-1	. DOOR ASSEMBLY	2	
	22S8003-23	. MESH, Wire	2	
-27	22S8003-5	FAIRING ASSEMBLY, Dorsal	1	J
	42S8007-3	FAIRING ASSEMBLY, Dorsal	1	AU
	or			
	42S8007-25	FAIRING ASSEMBLY, Dorsal	1	AU
	22S8025-1	. DOOR ASSEMBLY	4	
	42S8350-1	. DOOR ASSEMBLY, Carb air filter access	1	AU
-28	22S8003-7	FAIRING ASSEMBLY, Dorsal	1	J
	42S8008-3	FAIRING ASSEMBLY, Dorsal	1	JB
	or			
	42S8008-9	FAIRING ASSEMBLY, Dorsal	1	JC
	42S8008-11	FAIRING ASSEMBLY, Dorsal	1	JD
	22S8025-1	. DOOR ASSEMBLY	2	
-29	42S8009-8	FAIRING ASSEMBLY, Dorsal	1	J
	or			
	22S8003-9	FAIRING ASSEMBLY, Dorsal	1	J
	42S8009-1	FAIRING ASSEMBLY, Dorsal	1	AU
	22S8025-1	. DOOR ASSEMBLY	2	
-30	22S3050-1	DOOR ASSEMBLY, Oil filler and dipstick	1	J
	42S4050-3	DOOR ASSEMBLY, Oil filler	1	AU
	22S3050-9	. DOOR	1	J
	22S3050-11	. DOOR	1	J
	42S3050-10	. DOOR SUBASSEMBLY, Oil filler	1	AU
		Attaching Parts		
	5-0-120	. FASTENER (LFK)	2	J
	GOS-5-93	. GROMMET (LFK)	2	J
		———*———		
-31	22S8145-1	DOOR ASSEMBLY, Engine air exit LH, see fig. 19	Ref	
-32	22S8146-1	DOOR ASSEMBLY, Engine air exit RH, see fig. 19	Ref	
-33	22S5067-1	COVER ASSEMBLY, Upper forward LH	1	
-34	22S5067-2	COVER ASSEMBLY, Upper forward RH	1	
-35	22S5067-3	COVER ASSEMBLY, Upper aft LH	1	
-36	22S5067-4	COVER ASSEMBLY, Upper aft RH	1	
-37	22S5067-5	COVER ASSEMBLY, Lower aft LH	1	
-38	22S5067-6	COVER ASSEMBLY, Lower aft RH	1	
-39	22S5067-7	COVER ASSEMBLY, Lower forward	1	
	22S5067-22	. GASKET, Cover	2	
	22S5067-20	. LATCH ASSEMBLY	1	
	22S5067-21	. . CLIP	1	
	H-5000-032-250	. . LATCH (HWL)	1	

Figure and Index Number	Part Number	Description 1 2 3 4 5 6 7	Units per Assembly	Usable On Code
16-	NAF-1088-1A-5	. CHAIN	1	
		DOOR ASSEMBLY	9	
-40	22S8022-21	GRIP ASSEMBLY	1	J
-41	22S8022-23	GRIP ASSEMBLY	1	AU
	42S8320-3	GRIP ASSEMBLY	1	J
-42	22S8022-25	GRIP ASSEMBLY	1	AU
	42S8320-1	DOOR INSTALLATION, Access LH sta 608.810 to 613.820	1	
	22S8165-1	DOOR INSTALLATION, Access RH sta 613.820 to 618.820	1	
	22S8166-1		1	
-43	22S8165-3	. DOOR, Access LH	1	
	22S8166-3	. DOOR, Access RH		
		Attaching Parts	12	
	AN525-10R8	. SCREW	12	
	AN960D10L	. WASHER		
		———*———	1	
	22S8021-1	COWLING INSTALLATION, Aft pylon upper	1	
-44	22S8021-101	. COWLING ASSEMBLY		
	or		1	
	22S8021-7	. COWLING ASSEMBLY		
		Attaching Parts	9	
	42S8092-60	. FASTENER ASSEMBLY		
	or		9	
	42S8092-57	. FASTENER ASSEMBLY		
	or		9	
	42S8092-3	. FASTENER ASSEMBLY	8	
	A5-30	. FASTENER (DZ)	8	
	GA5-312	. GROMMET (DZ)		
		———*———	1	
-45	22S8021-103	. COWLING ASSEMBLY		
	or		1	
	22S8021-9	. COWLING ASSEMBLY		
		Attaching Parts	7	
	42S8092-60	. FASTENER ASSEMBLY		
	or		7	
	42S8092-57	. FASTENER ASSEMBLY		
	or		7	
	42S8092-3	. FASTENER ASSEMBLY	8	
	A5-30	. FASTENER (DZ)	8	
	GA5-312	. GROMMET (DZ)		
		———*———	Ref	
-46	22S8027-3	FAIRING ASSEMBLY, Tail, see fig. 7	Ref	
	22S8027-103	FAIRING ASSEMBLY, Tail, see fig. 8	Ref	
	22S8027-107	FAIRING ASSEMBLY, Tail, see fig. 8	1	J
	22S8027-124	. TAIL ASSEMBLY, Upper	1	EC
	22S8027-125	. TAIL ASSEMBLY, Upper	1	IU
	22S8027-126	. TAIL ASSEMBLY, Upper	1	J,EC
-47	22S8027-21	. . DOOR	1	IU
	22S8027-109	. . DOOR		
		Attaching Parts	6	J,EC
	AJ3-25	. . FASTENER (DZ)	6	IU
	A5-30	. . FASTENER (DZ)	6	J,EC
	GA3-175	. . GROMMET (DZ)	6	IU
	GA5-312	. . GROMMET (DZ)		
		———*———	1	
-48	22S8027-27	. TAIL FAIRING, Lower		
		Attaching Parts	47	J
	AN525-832R8	. SCREW	47	EC,IU
	AN525D10R8	. SCREW	47	J
	AN960D8	. WASHER	47	EC,IU
	AN960D10	. WASHER		
		———*———	1	J
	22S4381-1	DOOR INSTALLATION, Cargo hook stowage sta 329	1	J
-49	22S4381-2	. DOOR ASSEMBLY, Cargo hook stowage		

Figure and Index Number	Part Number	1 2 3 4 5 6 7 Description	Units per Assembly	Usable On Code
16-		*Attaching Parts*		
	2-0-240	. STUD (LFK)	6	J
	2-0-180	. STUD (LFK)	1	J
	GOS-2-93	. GROMMET (LFK)	7	J
		——————		
	22S4388-1	DOOR INSTALLATION, External cargo release access	1	J
-50	22S4388-2	. DOOR ASSEMBLY, External cargo release access	1	J
		Attaching Parts		
	AN525-10R8	. SCREW	14	J
	AN960D10L	. WASHER	14	J
		——————		
	22S4142-1	STEP INSTALLATION, Cabin entrance	1	J
	42S4143-1	STEP INSTALLATION, Cabin entrance	1	AU
-51	22S4142-2	. STEP ASSEMBLY, Cabin entrance	1	J
	42S4934-1	. STEP ASSEMBLY, Cabin entrance	1	AU
		Attaching Parts		
	AN23-9A	. BOLT	2	J
	AN23-11A	. BOLT	2	AU
	AN23-26A	. BOLT	2	J
	AN23-28A	. BOLT	2	AU
	AN364-1032	. NUT	4	
	AN960D10L	. WASHER	4	J
	AN960D10L	. WASHER	5	AU
	AN960D10	. WASHER	2	J
	AN960D10	. WASHER	7	AU
	AN960C10	. WASHER	4	J
		——————		
-52	42S3241-1	DOOR ASSEMBLY, Ferry fuel system	1	D,EH
	42S3213-1	DOOR ASSEMBLY, Ferry fuel system	1	DV
		Attaching Parts		
	AN525-10-8	SCREW	32	
		——————		
-53	22S8065-1	PANEL, Louvered sta 394.680 to sta 403.510	2	
		Attaching Parts		
	AN530-8R8	SCREW	12	
	AN960D8L	WASHER	12	
		——————		

Structure

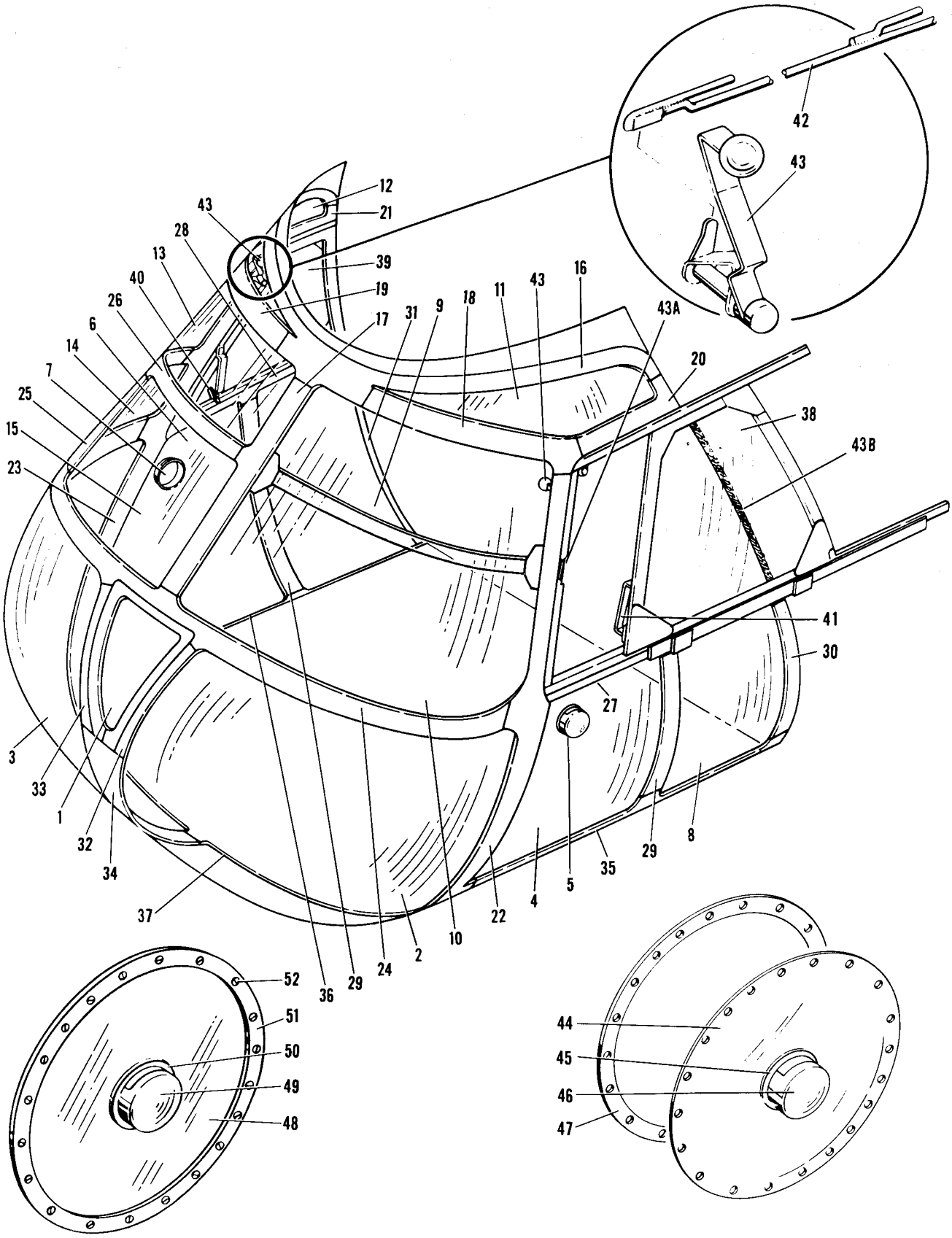

Figure 17. Nose Enclosure and Windows

Figure and Index Number	Part Number	Description 1 2 3 4 5 6 7	Units per Assembly	Usable On Code
16-		*Attaching Parts*		
	2-0-240	. STUD (LFK)	6	J
	2-0-180	. STUD (LFK)	1	J
	GOS-2-93	. GROMMET (LFK)	7	J
		***		
	22S4388-1	DOOR INSTALLATION, External cargo release access	1	J
-50	22S4388-2	. DOOR ASSEMBLY, External cargo release access	1	J
		Attaching Parts		
	AN525-10R8	. SCREW	14	J
	AN960D10L	. WASHER	14	J
		***		
	22S4142-1	STEP INSTALLATION, Cabin entrance	1	J
	42S4143-1	STEP INSTALLATION, Cabin entrance	1	AU
-51	22S4142-2	. STEP ASSEMBLY, Cabin entrance	1	J
	42S4934-1	. STEP ASSEMBLY, Cabin entrance	1	AU
		Attaching Parts		
	AN23-9A	. BOLT	2	J
	AN23-11A	. BOLT	2	AU
	AN23-26A	. BOLT	2	J
	AN23-28A	. BOLT	2	AU
	AN364-1032	. NUT	4	
	AN960D10L	. WASHER	4	J
	AN960D10L	. WASHER	5	AU
	AN960D10	. WASHER	2	J
	AN960D10	. WASHER	7	AU
	AN960C10	. WASHER	4	J
		***		
-52	42S3241-1	DOOR ASSEMBLY, Ferry fuel system	1	D,EH
	42S3213-1	DOOR ASSEMBLY, Ferry fuel system	1	DV
		Attaching Parts		
	AN525-10-8	SCREW	32	
		***		

Structure

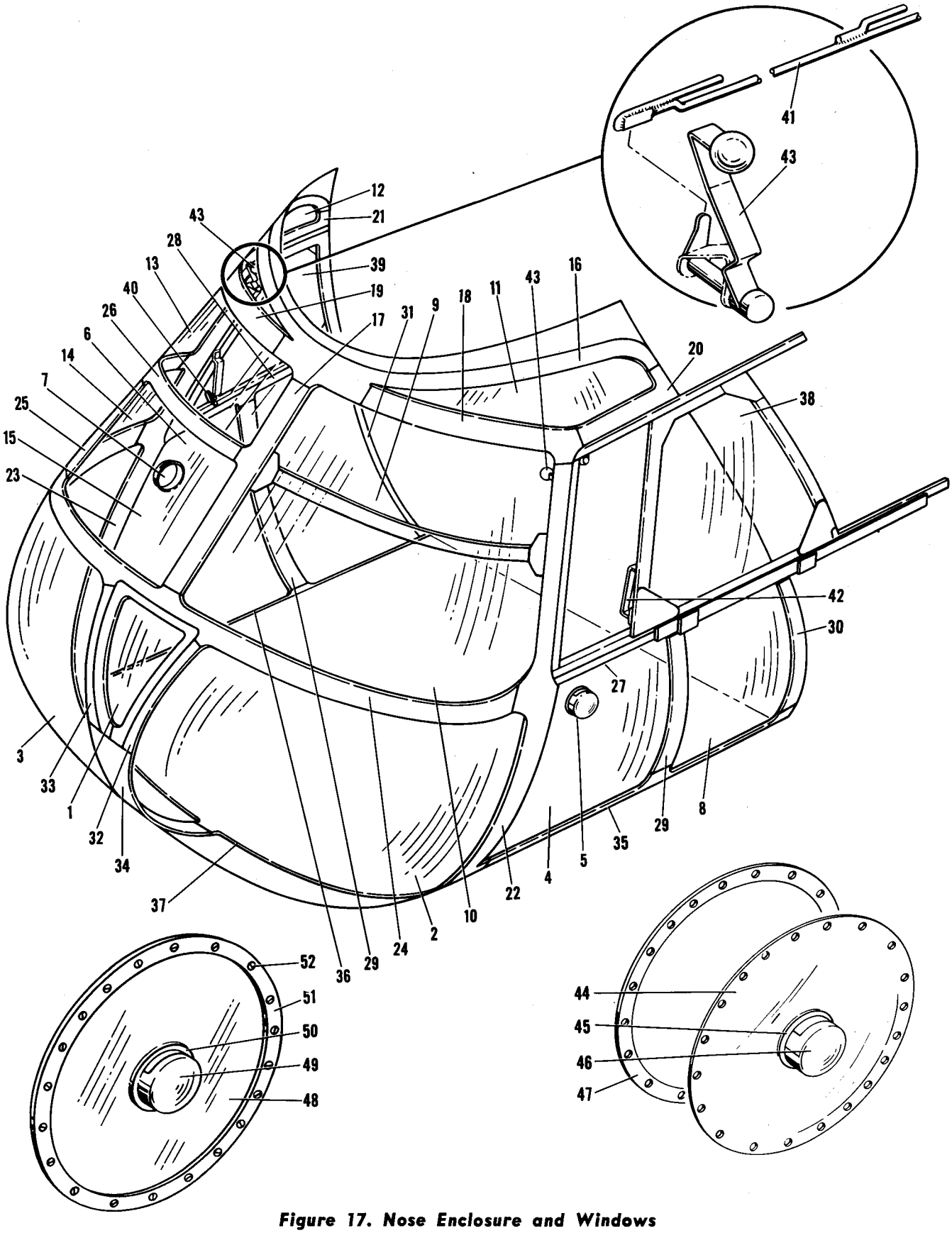

Figure 17. Nose Enclosure and Windows

Figure and Index Number	Part Number	Description 1 2 3 4 5 6 7	Units per Assembly	Usable On Code
17-	22S8002-1	ENCLOSURE INSTALLATION, Nose	1	J
	22S8002-303	ENCLOSURE INSTALLATION, Nose	1	AV
	22S8002-20	ENCLOSURE INSTALLATION, Nose	1	HA
	22S8002-546	ENCLOSURE INSTALLATION, Nose	1	KL
	22S8002-844	ENCLOSURE INSTALLATION, Nose	1	IP,JA
	22S8002-3	. ENCLOSURE ASSEMBLY, Nose	1	J
	22S8002-305	. ENCLOSURE ASSEMBLY, Nose	1	AV
	22S8002-42	. ENCLOSURE ASSEMBLY, Nose	1	HA
-1	22S8002-5	. . DOOR ASSEMBLY, Access	1	J,AV
	22S8002-827	. . DOOR ASSEMBLY, Access	1	I
	22S8002-828	. . SEAL	1	I
	22S8002-829	. . SEAL	2	I
	22S8002-830	. . SEAL	1	I
	22S8002-87	. . . CHANNEL	1	
	22S8002-88	. . . CHANNEL	1	
	22S8002-89	. . . CHANNEL	1	
	22S8002-177	. . . SEAL	1	
	22S8002-277	. . . FILLER	1	
	22S8002-279	. . . FILLER	2	
-2	22S8002-7	. PANEL ASSEMBLY	1	J,AV
	22S8002-105	. PANEL	1	I
-3	22S8002-8	. PANEL ASSEMBLY	1	J,AV
	22S8002-548	. PANEL ASSEMBLY	1	HB
	22S8002-106	. PANEL	1	HA
-4	22S8002-9	. PANEL ASSEMBLY	1	J,HC
	22S8002-543	. PANEL ASSEMBLY	1	HB
	22S8002-107	. PANEL	1	HA
-5	CA3251	. . VENTILATOR (SPV)	1	
	18S8010-20	. . GASKET	1	
-6	22S8002-10	. PANEL ASSEMBLY	1	J,HC
	22S8002-544	. PANEL ASSEMBLY	1	HB
	22S8002-108	. PANEL	1	HA
-7	CA3251	. . VENTILATOR (SPV)	1	
	18S8010-20	. . GASKET	1	
-8	22S8002-11	. PANEL ASSEMBLY	1	J,AV
	22S8002-109	. PANEL	1	I
-9	22S8002-12	. PANEL ASSEMBLY	1	J,AV
	22S8002-110	. PANEL	1	I
-10	22S8002-13	. PANEL ASSEMBLY	1	J,AV
	22S8002-542	. PANEL ASSEMBLY	1	I
-11	22S8002-15	. PANEL ASSEMBLY	1	J,AV
	22S8002-113	. PANEL	1	I
-12	22S8002-16	. PANEL ASSEMBLY	1	J,AV
	22S8002-114	. PANEL	1	I
-13	22S8002-17	. PANEL ASSEMBLY	1	J,AV
	22S8002-115	. PANEL	1	I
-14	22S8002-19	. PANEL ASSEMBLY	1	J,AV
	22S8002-117	. PANEL	1	I
-15	22S8037-1	. PANEL ASSEMBLY, Plate glass	1	J,AV
	22S8037-2	. PANEL ASSEMBLY, Plate glass	1	I
	22S8002-181	. STRIP, Chafing	AR	J,HA
	22S8002-545	. STRIP, Seal	AR	HB
	or			
	22S8002-541	. STRIP, Seal	AR	HB
	22S8002-841	. STRIP, Chafing	AR	HI,JA
-16	22S8002-121	. CAP	1	
	22S8002-149	. SEAL	1	
-17	22S8002-123	. CAP	1	
	22S8002-153	. SEAL	1	
-18	22S8002-125	. CAP	1	
-19	22S8002-126	. CAP	1	
	22S8002-151	. SEAL	2	

Figure and Index Number	Part Number	Description 1 2 3 4 5 6 7	Units per Assembly	Usable On Code
			1	
17-20	22S8002-127	. CAP	1	
-21	22S8002-128	. CAP	2	
	22S8002-155	. SEAL	1	
-22	22S8002-329	. CAP	1	
-23	22S8002-330	. CAP	2	
	22S8002-157	. SEAL	1	
-24	22S8002-131	. CAP	1	
	22S8002-159	. SEAL	1	
-25	22S8002-133	. CAP	1	
	22S8002-163	. SEAL	1	
-26	22S8002-135	. CAP	1	
	22S8002-161	. SEAL	1	
-27	22S8002-137	. CAP	1	
-28	22S8002-138	. CAP	2	
	22S8002-165	. SEAL	2	
-29	22S8002-139	. CAP	2	
	22S8002-169	. SEAL	1	
-30	22S8002-141	. CAP	1	
-31	22S8002-142	. CAP	2	
	22S8002-167	. SEAL	1	
-32	22S8002-327	. CAP	1	
-33	22S8002-328	. CAP	2	
	22S8002-171	. SEAL	1	
-34	22S8002-325	. CAP	1	
	22S8002-173	. SEAL	1	
-35	22S8002-331	. CAP	1	
-36	22S8002-332	. CAP	2	
	22S8002-175	. SEAL	1	
-37	22S8002-369	. CAP	1	J
	22S8004-1	WINDOW INSTALLATION, Co-pilot's sliding	1	AV
	22S8004-151	WINDOW INSTALLATION, Co-pilot's sliding	1	I
	22S8004-431	WINDOW INSTALLATION, Co-pilot's sliding	1	J
	22S8004-2	WINDOW INSTALLATION, Pilot's sliding	1	AV
	22S8004-152	WINDOW INSTALLATION, Pilot's sliding	1	I
	22S8004-432	WINDOW INSTALLATION, Pilot's sliding	1	J
-38	22S8004-3	. PANEL ASSEMBLY, LH	1	AU
	22S8004-153	. PANEL ASSEMBLY, LH	1	J
-39	22S8004-4	. PANEL ASSEMBLY, RH	1	AU
	22S8004-154	. PANEL ASSEMBLY, RH	1	
	22S8207-1	. . TRIGGER ASSEMBLY, LH	1	
-40	22S8207-2	. . TRIGGER ASSEMBLY, RH		
		Attaching Parts		
	22S8141-1	. . BOLT	1	J,AV
	22S8141-2	. . BOLT	1	I
	AN316-4R	. . NUT	1	
	AN364-1032	. . NUT	1	
	AN935-416	. . WASHER, Lock	1	
	AN960-10	. . WASHER	4	
		———*———		
	22S8142-1	. . SPRING, Trigger LH	1	
	22S8142-2	. . SPRING, Trigger RH	1	
-41	22S8004-407	. . HANDLE ASSEMBLY, LH	1	
	2S8004-408	. . HANDLE ASSEMBLY, RH	1	
	42S8500-1	. . . HANDLE, LH	1	
	42S8500-2	. . . HANDLE, RH	1	
	22S8004-89	. . . GRIP, Handle	1	
	22S8004-5	. TRACK ASSEMBLY, LH	1	J
	22S8004-165	. TRACK ASSEMBLY, LH	1	AV
	22S8004-419	. TRACK ASSEMBLY, LH	1	HD
	22S8004-440	. TRACK ASSEMBLY, LH	1	HE
	22S8004-6	. TRACK ASSEMBLY, RH	1	J

Figure and Index Number	Part Number	Description 1 2 3 4 5 6 7	Units per Assembly	Usable On Code
17-	22S8004-166	. TRACK ASSEMBLY, RH	1	AV
	22S8004-420	. TRACK ASSEMBLY, RH	1	HD
	22S8004-441	. TRACK ASSEMBLY, RH	1	HE
-42	22S8004-13	. ROD ASSEMBLY, LH	1	J
	22S8004-173	. ROD ASSEMBLY, LH	1	AU
	22S8004-405	. ROD ASSEMBLY, RH	1	J
	22S8004-406	. ROD ASSEMBLY, RH	1	AU
-43	22S8004-125	. LEVER ASSEMBLY	1	
	22S8004-83	. RAINSTRIP, LH	1	J
	22S8004-163	. RAINSTRIP, LH	1	AV,I
	22S8004-137	. RAINSTRIP, RH	1	J
	22S8004-179	. RAINSTRIP, RH	1	AV,I
	22S8004-139	. RAINSTRIP, RH	1	
		Attaching Parts		
	AN525-10R9	. SCREW (Used with 22S8004-83)	4	J
	AN525-10R9	. SCREW (Used with 22S8004-163)	3	AV,I
	AN525-10R9	. SCREW (Used with 22S8004-137)	5	J
	AN525-10R9	. SCREW (Used with 22S8004-179)	4	AV,I
	AN960D10L	. WASHER (Used with 22S8004-83)	4	J
	AN960D10L	. WASHER (Used with 22S8004-163)	3	AV,I
	AN960D10L	. WASHER (Used with 22S8004-137)	5	J
	AN960D10L	. WASHER (Used with 22S8004-179)	4	AV,I
		———*———		
	22S8004-181	. SEAL, LH (used with 22S8004-83)	1	
	22S8004-187	. SEAL, LH (used with 22S8004-163)	1	
	22S8004-183	. SEAL, RH (used with 22S8004-137)	1	
	22S8004-189	. SEAL, RH (used with 22S8004-179)	1	
	22S8004-185	. SEAL, RH (used with 22S8004-139)	1	
	22S8004-85	. SEAL	2	
-43A	22S8004-87	. SEAL	2	
-43B	22S8004-49	. SEAL, LH	1	DY
	22S8004-450	. SEAL, LH	1	DS,EH
	22S8004-50	. SEAL, RH	1	DY
	22S8004-451	. SEAL, RH	1	DS,EH
	22S8011-1	WINDOW INSTALLATION, Cabin LH	2	J
	22S8011-2	WINDOW INSTALLATION, Cabin RH	4	J
	22S8011-3	. WINDOW ASSEMBLY, Cabin	1	J
-44	22S8011-47	. . WINDOW	1	J
-45	18S8010-20	. . GASKET	1	
-46	CA3251	. . VENTILATOR (SPV)	1	
	22S8011-37	. SPACER	20	J
-47	22S8011-39	. RING, Retaining	1	J
		Attaching Parts		
	AN525-832R10	. SCREW	20	J
	AN365-832	. NUT	20	J
	AN960D8L	. WASHER	40	J
		———*———		
	22S8011-41	WINDOW INSTALLATION, LH sta 279.500 to sta 299.500	1	J
	22S8011-43	. WINDOW ASSEMBLY	1	J
	22S8011-37	. SPACER	20	J
	22S8011-39	. RING, Retaining	1	J
		Attaching Parts		
	AN525-832R10	. SCREW	20	J
	AN365-832	. NUT	20	J
	AN960D8L	. WASHER	40	J
		———*———		
	42S8011-1	WINDOW INSTALLATION, LH	3	AU
	42S8011-2	WINDOW INSTALLATION, RH	3	AU
	42S8011-7	WINDOW INSTALLATION, LH sta 119.500 to 139.500	1	AU
	42S8011-5	WINDOW INSTALLATION, RH sta 319.500 to 339.500	1	AU

Figure and Index Number	Part Number	Description 1 2 3 4 5 6 7	Units per Assembly	Usable On Code
17-48	42S8011-9	. WINDOW ASSEMBLY	1	EZ
	42S8011-411	. WINDOW ASSEMBLY	1	FA
	42S8011-25	. . PANEL, Window	1	
-49	CA3251	. . VENTILATOR (SPV)	1	
-50	18S8010-20	. . GASKET	1	
-51	42S8011-17	. DOUBLER (Used with 42S8011-1)	1	AU
	42S8011-31	. DOUBLER (Used with 42S8011-7)	1	AU
	42S8011-405	. DOUBLER (Used with 42S8011-5)	1	AU
	42S8011-409	. DOUBLER (Used with 42S8011-2)	1	AU
	42S8011-15	. RING, Retaining (used with 42S8011-1)	1	AU
	42S8011-404	. RING, Retaining (used with 42S8011-5)	1	AU
	42S8011-408	. RING, Retaining (used with 42S8011-2)	1	AU
	42S8011-417	. RING, Retaining (used with 42S8011-7)	1	AU
		Attaching Parts		
	AN525-832R9	. SCREW	12	AU
-52	AN525-832R10	. SCREW	16	AU
	AN525-832R11	. SCREW	2	AU
	AN525-832R12	. SCREW	1	AU
	AN960D8	. WASHER	16	AU
	AN960D8L	. WASHER (Used with AN525-832R9 and 12)	13	AU
	42S8011-3	WINDOW INSTALLATION, LH sta 279.500 to 299.500	1	AU
	42S8011-11	. WINDOW ASSEMBLY	1	AU
	42S8011-27	. . PANEL, Window	1	AU
	42S8011-17	. DOUBLER	1	AU
	42S8011-15	. RING, Retaining	1	AU
		Attaching Parts		
	AN525-832-10	. SCREW	16	AU
	AN960D8	. WASHER	16	AU
		**		
	42S8011-23	. SEAL	8	EZ
	42S8011-23	. SEAL	4	FA
	42S8011-410	. RING, Insulation	4	FA

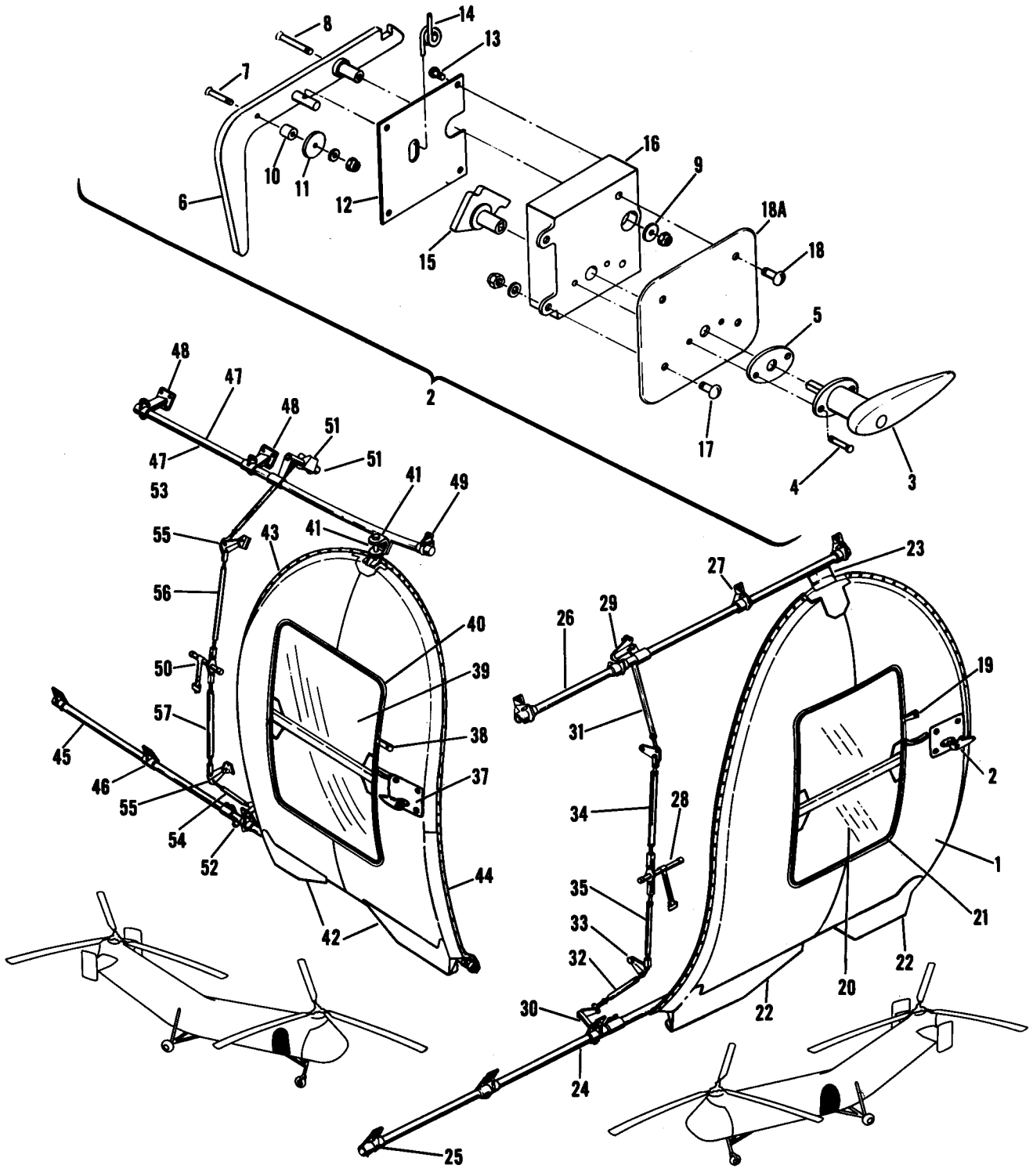

Figure 18. Cabin and Rescue Doors, YH-21 and H-21A

Figure and Index Number	Part Number	1 2 3 4 5 6 7 Description	Units per Assembly	Usable On Code
18-	22S8014-1	DOOR INSTALLATION, Cabin	1	J
-1	22S8015-1	. DOOR ASSEMBLY, Cabin	1	J
	42S8074-1	. . LATCH INSTALLATION, Cabin door	Ref	
-2	42S8467-1	. . . LATCH ASSEMBLY	1	
-3	2S	. . . . HANDLE ASSEMBLY, Outside.. (DY)	1	
		Attaching Parts		
-4	AN509-8R10	. . . . SCREW	1	
		———*———		
-5	42S8460-25	. . . . GASKET	1	
-6	42S8467-3	. . . . LEVER ASSEMBLY	1	
		Attaching Parts		
-7	AN509-10R15	. . . . SCREW	1	
-8	AN509-10R23	. . . . SCREW	1	
	AN364-1032	. . . . NUT	2	
	AN960-10	. . . . WASHER	1	
-9	PHS153-1-3-12D	. . . . WASHER	1	
		———*———		
	42S8467-5	. . . . . FOLLOWER	1	
	42S8467-6	. . . . . SHAFT, Rocker	1	
	42S8467-4	. . . . . LEVER	1	
-10	42S8467-7	. . . . SPACER	1	
-11	42S8467-8	. . . . PLATE, Guide	1	
-12	42S8467-10	. . . . PLATE, Cover	1	
		Attaching Parts		
-13	AN515DD8-6	. . . . SCREW	4	
		———*———		
-14	42S8467-9	. . . . SPRING	1	
-15	42S8468-3	. . . . CAM	1	
	or			
	42S8468-1	. . . . CAM	1	
-16	42S8469-1	. . . . CASE ASSEMBLY, Latch	1	
		Attaching Parts		
-17	AN525-416R11	. . . . SCREW	2	
-18	AN525-416R10	. . . . SCREW	2	
	AN365-428	. . . . NUT	2	
	AN960D416	. . . . WASHER	2	
	AN960D416L	. . . . WASHER	4	
		———*———		
	NAS77A-8-84	. . . . . BUSHING	1	
	NAS76A-10-030	. . . . . BUSHING	1	
	RL21SB-6	. . . . . RING, Lock (ROSN)	2	
	R104SB-6L	. . . . . INSERT (ROSN)	2	
	42S8469-2	. . . . . CASE	1	
-18A	42S8511-1	. . . . PLATE ASSEMBLY, Cover	1	
-19	22S8015-3	. . STRAP ASSEMBLY	1	
	22S8015-67	. . . STRAP	1	
		Attaching Parts		
	AN227-6	. . . BUTTON	1	
	AN227-7	. . . SOCKET	1	
		———*———		
-20	22S8015-171	. . WINDOW ASSEMBLY	1	
	22S8015-69	. . . WINDOW	1	
-21	22S8015-131	. . SEAL	1	
	22S8015-133	. . STRIP, Filler	1	
	22S8015-121	. . BULB, Rubber	1	J
	22S8015-123	. . BULB, Rubber	1	J
		Attaching Parts		
	AN515-6R5	. . SCREW	41	
	22NKM-62	. . NUT, Cap (EN)	41	
		———*———		
-22	17S8070-7	. . FITTING ASSEMBLY, Sliding door lower roller	2	

Figure and Index Number	Part Number	1 2 3 4 5 6 7 Description	Units per Assembly	Usable On Code
18-		*Attaching Parts*		
	AN23-8A	. . BOLT	3	J
	AN365-1032	. . NUT	3	
	AN960D10	. . WASHER	3	
		———*———		
	17S8070-9	. . . FITTING, Lower	1	
	52-040-187-0540	. . . PIN, Roll (EN)	4	
	or			
	17S8070-5	. . . PIN	4	
	KP3AR11-2	. . . BEARING, Track (FAF)	4	
	42S8497-1	. . BRACKET ASSEMBLY, Lower roller fitting support	2	
		Attaching Parts		
	AN525-10R9	. . SCREW	3	
	AN960C10	. . WASHER	3	
		———*———		
-23	17S8070-8	. . FITTING ASSEMBLY, Sliding door upper roller	1	
		Attaching Parts		
	AN23-9A	. . BOLT	3	
	AN364-1032	. . NUT	3	
	AN960C10	. . WASHER	3	
	AN960D10L	. . WASHER	3	
		———*———		
	17S8070-10	. . . FITTING, Upper	1	
	52-040-187-0540	. . . PIN, Roll (EN)	4	
	or			
	17S8070-5	. . . PIN	4	
	KP3AR11-2	. . . BEARING, Track (FAF)	4	
	22S8105-1	. . BRACKET ASSEMBLY, Upper	1	
		Attaching Parts		
	AN24-8A	. . BOLT	2	
	AN364-428	. . NUT	2	
	AN960C416L	. . WASHER	4	
		———*———		
	22S8018-1	. TRACK INSTALLATION, Cabin door lower	1	J
-24	22S8018-5	. . TRACK ASSEMBLY, Lower	1	A,BP
	22S8018-401	. . TRACK ASSEMBLY, Lower	1	BQ
-25	22S8083-1	. . BRACKET ASSEMBLY, Lower	6	J
		Attaching Parts		
	AN23-9A	. . BOLT	2	
	AN364-1032	. . NUT	2	
	AN960D10L	. . WASHER	2	
	AN960D10	. . WASHER	2	
	AN960C10L	. . WASHER	2	
		———*———		
	22S8018-3	. TRACK INSTALLATION, Cabin door upper	1	A,BP
-26	22S8018-7	. . TRACK ASSEMBLY, Upper	1	
	22S8018-402	. . TRACK ASSEMBLY, Upper	1	BQ
-27	22S8083-3	. . BRACKET ASSEMBLY, Upper	4	J
		Attaching Parts		
	AN525-10R10	. . SCREW	2	
	AN364-1032	. . NUT	2	
	AN960D10L	. . WASHER	2	
		———*———		
	22S8018-9	. JETTISON MECHANISM INSTALLATION, Cabin door	1	A,BP
	22S8018-403	. JETTISON MECHANISM INSTALLATION, Cabin door	1	BQ
-28	22S8078-1	. . HANDLE ASSEMBLY, Door jettison	1	J
		Attaching Parts		
	AN392-25	. . PIN, Flat hd	2	
	AN381-2-8	. . PIN, Cotter	2	
	AN960C4	. . WASHER	2	
	22S8018-19	. . COLLAR	2	
		———*———		

Figure and Index Number	Part Number	1 2 3 4 5 6 7 Description	Units per Assembly	Usable On Code
18-	22S8018-21	. . PLUG	2	
-29	22S8079-5	. . TUBE ASSEMBLY, Upper	1	
-30	22S8079-3	. . TUBE ASSEMBLY, Lower	1	
	NAS43DD8-37	. . SPACER	2	
	22S8018-17	. . PLUG	2	
	22S8079-1	. . BELLCRANK ASSEMBLY	2	
		Attaching Parts		
	AN392-21	. . PIN, Flat hd	2	
	AN381-2-8	. . PIN, Cotter	2	
	AN960C4	. . WASHER	2	
		———*———		
-31	22S8019-401	. . ROD ASSEMBLY	1	A,BP
	NAS364-1DD1188	. . ROD ASSEMBLY	1	BQ
-32	22S8019-402	. . ROD ASSEMBLY	1	A,BP
	NAS364-1DD1062	. . ROD ASSEMBLY	1	BQ
		Attaching Parts		
	AN23-14	. . BOLT	1	
	AN23-16	. . BOLT	1	
	AN381-2-12	. . PIN, Cotter	2	
	AN320-3	. . NUT	2	
	AN960C10L	. . WASHER	1	
	AN960D10L	. . WASHER	2	
		———*———		
-33	22S8077-1	. . ARM, Door jettison mechanism	2	J
		Attaching Parts		
	AN4-21	. . BOLT	1	J
	AN381-2-14	. . PIN, Cotter	1	
	AN310-4	. . NUT	1	
	AN960D416	. . WASHER	2	
	AN960D416L	. . WASHER	1	
		———*———		
	NAS43DD4-102	. . SPACER	2	J
-34	NAS364-1HH1548	. . ROD ASSEMBLY	1	
-35	NAS364-1HH1792	. . ROD ASSEMBLY	1	
		Attaching Parts		
	AN393-11	. . PIN, Flat hd	2	
	AN381-2-8	. . PIN, Cotter	2	
	AN960C10L	. . WASHER	2	
		———*———		
	22S8016-1	DOOR INSTALLATION, Rescue	1	J
-36	22S8017-1	. DOOR ASSEMBLY, Rescue	1	J
	42S8073-1	. . LATCH INSTALLATION, Rescue door	Ref	
-37	42S8467-1	. . . LATCH ASSEMBLY	1	
	2S	. . . . HANDLE ASSEMBLY, Outside (DY)	1	
		Attaching Parts		
	AN505CR8-10	. . . . SCREW	2	
		———*———		
	42S8460-25	. . . . GASKET	1	
	42S8467-3	. . . . LEVER ASSEMBLY	1	
		Attaching Parts		
	AN509-10R15	. . . . SCREW	1	
	AN509-10R23	. . . . SCREW	1	
	AN364-1032	. . . . NUT	2	
	AN960-10	. . . . WASHER	1	
	PHS153-1-3-12D	. . . . WASHER	1	
		———*———		
	42S8467-5	. . . . . FOLLOWER	1	
	42S8467-6	. . . . . SHAFT, Rocker	1	
	42S8467-4	. . . . . LEVER	1	
	42S8467-7	. . . . SPACER	1	

Figure and Index Number	Part Number	1 2 3 4 5 6 7 Description	Units per Assembly	Usable On Code
18-	42S8467-8	. . . . PLATE, Guide	1	
	42S8467-10	. . . . PLATE, Cover	1	
		Attaching Parts		
	AN515DD8-6	. . . . SCREW	4	
		———*———		
	42S8467-9	. . . . SPRING	1	
	42S8468-3	. . . . CAM	1	
	or			
	42S8468-1	. . . . CAM	1	
	42S8469-1	. . . . CASE ASSEMBLY, Latch	1	
		Attaching Parts		
	AN525-416R11	. . . . SCREW	2	
	AN525-416R10	. . . . SCREW	2	
	AN365-428	. . . . NUT	2	
	AN960D416	. . . . WASHER	2	
	AN960D416L	. . . . WASHER	4	
		———*———		
	NAS77A-8-84	. . . . . BUSHING	1	
	NAS76A-10-030	. . . . . BUSHING	1	
	RL21SB-6	. . . . . RING, Lock (ROSN)	2	
	R104SB-6L	. . . . . INSERT (ROSN)	2	
	42S8469-2	. . . . . CASE	1	
	42S8511-1	. . . . PLATE ASSEMBLY, Cover	1	
-38	22S8015-3	. . STRAP ASSEMBLY	1	
-39	22S8015-171	. . WINDOW ASSEMBLY	1	
	22S8015-69	. . . WINDOW	1	
-40	22S8017-9	. . SEAL	1	
	22S8017-7	. . STRIP, Filler	1	
-41	22S8069-1	. . FITTING, Swivel roller support	1	
		Attaching Parts		
	AN310C6	. . NUT	1	
	AN381-3-12	. . PIN, Cotter	1	
	AN945-6P	. . WASHER	1	
		———*———		
	NAS73-6-107	. . BUSHING	1	
	F-835	. . BEARING (AXD)	2	
-42	17S8070-1	. . FITTING ASSEMBLY, Sliding door roller	3	J
		Attaching Parts		
	AN23-10A	. . BOLT	3	J
	AN23-8A	. . BOLT (Used on lower fittings only)	3	J
	AN364-1032	. . NUT	3	
	AN960D10L	. . WASHER	6	
		———*———		
	42S8495-1	. . STUD ASSEMBLY	1	J,AV
		Attaching Parts		
	AN509-416R11	. . SCREW	2	J,AV
	AN364-428A	. . NUT	2	J,AV
	AN960C416L	. . WASHER	2	J,AV
		———*———		
	42S8496-1	. . BRACKET ASSEMBLY	1	J,AV
		Attaching Parts		
	AN23-8A	. . BOLT	2	J,AV
	AN364-1032	. . NUT	2	J,AV
	AN960D10L	. . WASHER	4	J,AV
		———*———		
	22S8015-152	. . SPACER	2	J,AV
	42S8497-1	. . BRACKET ASSEMBLY, Lower roller fitting support	2	J,AV
		Attaching Parts		
	AN23-8A	. . BOLT	3	J,AV
		———*———		
-43	22S8017-177	. . BULB, Rubber	1	J

Figure and Index Number	Part Number	Description 1 2 3 4 5 6 7	Units per Assembly	Usable On Code
18-44	22S8017-179	. . BULB, Rubber	1	J
		Attaching Parts		
	AN515-6R5	. . SCREW	44	J
	22NKM-62	. . NUT, Cap (EN)	44	
		———*———		
	22S8019-1	. TRACK INSTALLATION, Rescue door lower	1	J
-45	22S8019-5	. . TRACK ASSEMBLY, Lower	1	J
	or			
	22S8019-403	. . TRACK ASSEMBLY, Lower	1	J
-46	42S8081-1	. . BRACKET ASSEMBLY	5	
		Attaching Parts		
	AN525-10R11	. . SCREW	2	
	AN364-1032	. . NUT	2	
	AN960D10L	. . WASHER	2	
	AN960C10L	. . WASHER	2	
		———*———		
	42S8282-1	. . SHIM (Used at sta 159.500 and 139.500)	2	
	42S8282-3	. . SHIM (Used at sta 179.500)	1	
	42S8282-5	. . SHIM (Used at sta 199.500)	1	
	42S8283-1	. . SHIM (Used at sta 199.500)	1	
	42S8283-3	. . SHIM (Used at sta 179.500)	1	
	22S8081-1	. . STOP ASSEMBLY	1	
		Attaching Parts		
	AN525-10R20	. . SCREW	1	
	AN364-1032	. . NUT	1	
	AN960D10L	. . WASHER	2	
		———*———		
	22S8019-3	. TRACK INSTALLATION, Rescue door upper	1	J
-47	22S8019-7	. . TRACK ASSEMBLY, Upper	1	J
	or			
	22S8019-404	. . TRACK ASSEMBLY, Lower	1	J
-48	22S8097-1	. . BRACKET ASSEMBLY	2	
		Attaching Parts		
	AN525-10R10	. . SCREW	4	
	AN364-1032	. . NUT	4	
	AN960D10L	. . WASHER	4	
		———*———		
-49	22S8097-3	. . BRACKET ASSEMBLY	1	
		Attaching Parts		
	AN525-10R10	. . SCREW	1	
	AN525-10R11	. . SCREW	1	
	AN364-1032	. . NUT	1	
	AN960D10L	. . WASHER	2	
		———*———		
	22S8081-1	. . STOP ASSEMBLY	1	
	22S8019-9	. JETTISON MECHANISM INSTALLATION, Rescue door	1	A,BP
	22S8019-405	. JETTISON MECHANISM INSTALLATION, Rescue door	1	BQ
-50	22S8095-1	. . HANDLE ASSEMBLY, Door jettison	1	J
		Attaching Parts		
	AN392-25	. . PIN, Flat hd	1	
	AN381-2-8	. . PIN, Cotter	1	
	AN960C4	. . WASHER	1	
	22S8018-19	. . COLLAR	1	
		———*———		
	22S8019-51	. . PLUG	1	
	22S8019-27	. . BRACKET	1	J
		Attaching Parts		
	AN525-10R10	. . SCREW	4	A,BP
	AN525-10R12	. . SCREW	4	BQ
	AN364-1032	. . NUT	4	
	AN960D10L	. . WASHER	8	
		———*———		

Figure and Index Number	Part Number	1 2 3 4 5 6 7 Description	Units per Assembly	Usable On Code
18-51	22S8096-5	. . TUBE ASSEMBLY, Upper	1	J
		Attaching Parts		
	AN23-15A	. . BOLT	2	
	AN364-1032	. . NUT	2	
	AN960C10	. . WASHER	2	
		———*———		
	22S8019-25	. . TUBE	1	
-52	42S8251-1	. . TUBE ASSEMBLY, Lower	1	
	22S8018-17	. . PLUG	1	
	22S8079-1	. . BELLCRANK ASSEMBLY	2	
		Attaching Parts		
	AN392-21	. . PIN, Flat hd	2	
	AN381-2-8	. . PIN, Cotter	2	
	AN960C4	. . WASHER	2	
		———*———		
-53	22S8019-401	. . ROD ASSEMBLY	1	
-54	22S8019-402	. . ROD ASSEMBLY	1	J
		Attaching Parts		
	AN23-14	. . BOLT	1	
	AN23-16	. . BOLT	1	
	AN381-2-12	. . PIN, Cotter	2	
	AN320-3	. . NUT	2	
	AN960C10L	. . WASHER	1	
	AN960D10L	. . WASHER	2	
		———*———		
-55	22S8077-3	. . ARM, Door jettison mechanism	2	
		Attaching Parts		
	AN4-32	. . BOLT	1	
	AN381-2-14	. . PIN, Cotter	1	
	AN310-4	. . NUT	1	
	AN960D416	. . WASHER	1	
	AN960D416L	. . WASHER	1	
		———*———		
	NAS43DD4-166	. . SPACER	2	
-56	NAS364-1HH1548	. . ROD ASSEMBLY	1	
-57	NAS364-1HH1792	. . ROD ASSEMBLY	1	
		Attaching Parts		
	AN393-11	. . PIN, Flat hd	2	
	AN381-2-8	. . PIN, Flat hd	2	
	AN960C10L	. . WASHER	2	
		———*———		

Structure

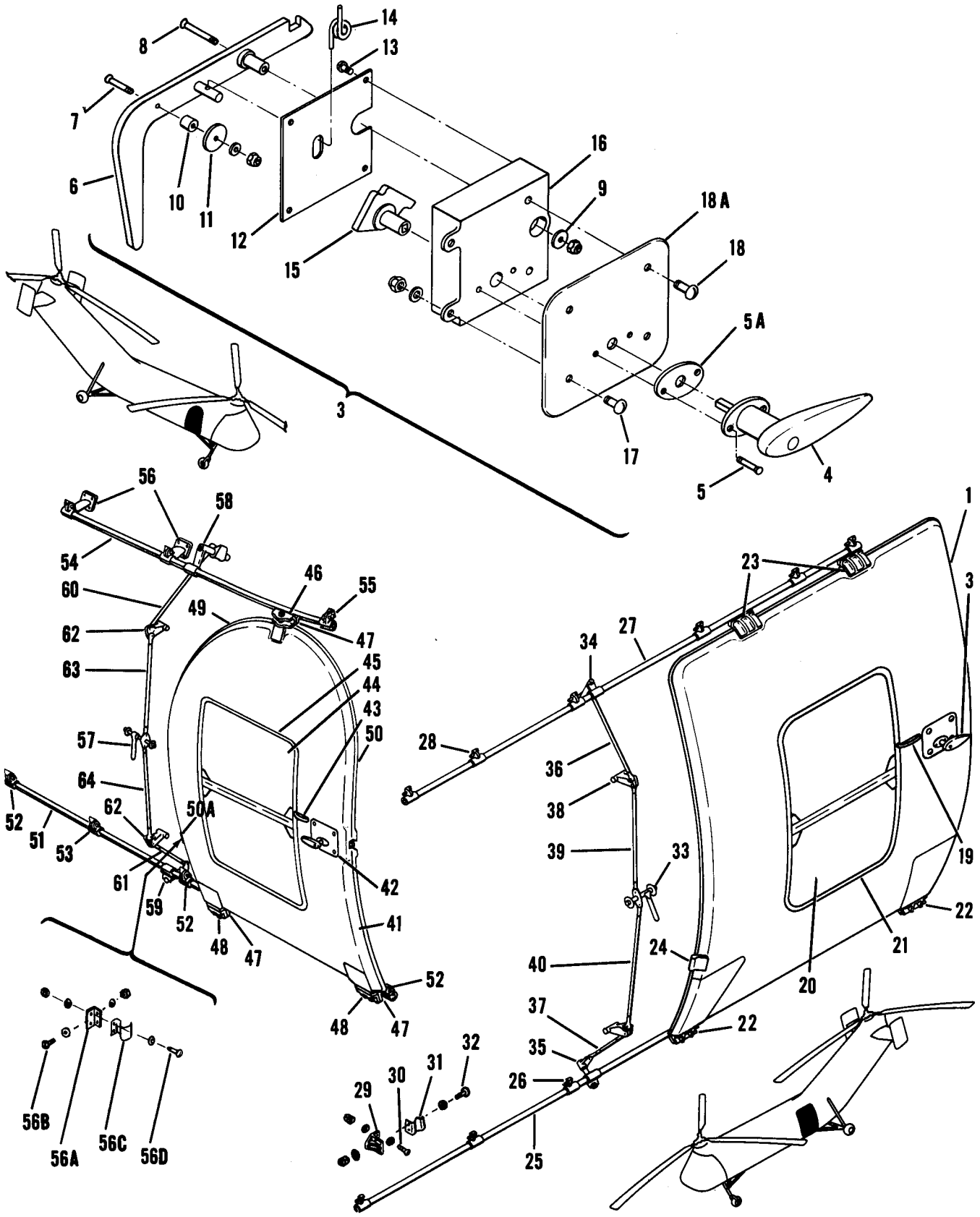

Figure 18A. Cabin and Rescue Doors, H-21B and H-21C

Figure and Index Number	Part Number	1 2 3 4 5 6 7 Description	Units per Assembly	Usable On Code
18A-	42S8014-1	DOOR INSTALLATION, Cabin	1	AV
	42S8014-2	DOOR INSTALLATION, Cabin	1	I
-1	42S8015-1	. DOOR ASSEMBLY, Cabin	1	AV
	42S8460-1	. DOOR ASSEMBLY, Cabin	1	I
-2	Deleted			
-3	42S8467-1	. . LATCH ASSEMBLY, Cabin and rescue door	1	
-4	2S	. . . HANDLE ASSEMBLY, Outside (DY)	1	
		Attaching Parts		
-5	AN509-8R10	. . . SCREW	2	
		———*———		
-5A	42S8460-25	. . . GASKET	1	
-6	42S8467-3	. . . LEVER ASSEMBLY	1	
		Attaching Parts		
-7	AN509-10R15	. . . SCREW	1	
-8	AN509-10R23	. . . SCREW	1	
	AN364-1032	. . . NUT	2	
	AN960-10	. . . WASHER	1	
-9	PHS153-1-3-12D	. . . WASHER	1	
		———*———		
	42S8467-5	. . . . FOLLOWER	1	
	42S8467-6	. . . . SHAFT, Rocker	1	
	42S8467-4	. . . . LEVER	1	
-10	42S8467-7	. . . SPACER	1	
-11	42S8467-8	. . . PLATE, Guide	1	
-12	42S8467-10	. . . PLATE, Cover	1	
		Attaching Parts		
-13	AN515DD8-6	. . . SCREW	4	
		———*———		
-14	42S8467-9	. . . SPRING	1	
-15	42S8468-3	. . . CAM	1	
	or			
	42S8468-1	. . . CAM	1	
-16	42S8469-1	. . . CASE ASSEMBLY, Latch	1	
		Attaching Parts		
-17	AN525-416R11	. . . SCREW	2	
-18	AN525-416R10	. . . SCREW	2	
	AN365-428	. . . NUT	2	
	AN960D416	. . . WASHER	2	
	AN960D416L	. . . WASHER	4	
		———*———		
	NAS77A-8-84	. . . . BUSHING	1	
	NAS76A-10-030	. . . . BUSHING	1	
	RL21SB-6	. . . . RING, Lock (ROSN)	2	
	R104SB-6L	. . . . INSERT (ROSN)	2	
	42S8469-2	. . . . CASE	1	
18A	42S8511-1	. . . PLATE ASSEMBLY, Cover	1	
-19	22S8015-3	. . STRAP ASSEMBLY	1	AV
	42S8460-3	. . STRAP ASSEMBLY	1	I
	22S8015-67	. . . STRAP	1	AV
	42S8460-26	. . . STRAP	1	I
		Attaching Parts		
	AN227-6	. . . BUTTON	1	
	AN227-7	. . . SOCKET	1	
		———*———		
-20	22S8015-171	. . WINDOW ASSEMBLY	1	
	22S8015-69	. . . WINDOW	1	
-21	22S8015-131	. . SEAL, Window	1	
	22S8015-133	. . STRIP, Filler	1	
	42S8015-404	. . SEAL, Bulb	1	AV
	42S8015-405	. . SEAL, Bulb	1	AV
	42S8015-406	. . SEAL, Bulb	1	AV

Figure and Index Number	Part Number	1 2 3 4 5 6 7 Description	Units per Assembly	Usable On Code
18A-	42S8015-407	. . SEAL, Bulb	1	AV
	42S8460-23	. . SEAL, Bulb	1	GX
	42S8460-32	. . SEAL, Bulb	1	GY
	42S8460-38	. . SEAL, Bulb	1	DU
	42S8460-24	. . SEAL, Bulb	1	GX
	42S8460-33	. . SEAL, Bulb	1	GY
	42S8460-36	. . SEAL, Bulb	1	DU
	42S8460-30	. . SEAL, Bulb	1	GX
	42S8460-34	. . SEAL, Bulb	1	GY
	42S8460-37	. . SEAL, Bulb	1	DU
		Attaching Parts		
	AN515-6R5	. . SCREW	85	
	22NKM-62	. . NUT, Cap (EN)	85	
		———*———		
-22	17S8070-7	. . FITTING ASSEMBLY, Sliding door lower roller	2	
		Attaching Parts		
	AN525-10R14	. . SCREW	3	
	AN365-1032	. . NUT	3	
	AN960D10	. . WASHER	9	
		———*———		
	17S8070-9	. . . FITTING, Lower	1	
	52-040-187-0540	. . . PIN, Roll (EN)	4	
	or			
	17S8070-5	. . . PIN	4	
	KP3AR11-2	. . . BEARING, Track (FAF)	4	
-23	17S8070-8	. . FITTING ASSEMBLY, Sliding door upper roller	2	
		Attaching Parts		
	AN525-10R16	. . SCREW	3	
	AN365-1032	. . NUT	3	
	AN960D10	. . WASHER	AR	
	AN960D10L	. . WASHER (Under hd)	3	
		———*———		
	17S8070-10	. . . FITTING, Upper	1	
	52-040-187-0540	. . . PIN, Roll (EN)	4	
	or			
	17S8070-5	. . . PIN	4	
	KP3AR11-2	. . . BEARING, Track (FAF)	4	
-24	42S8484-2	. . BUMPER, Cabin door	1	I
		Attaching Parts		
	AN525-10R10	. . SCREW	2	I
	AN525-10R16	. . SCREW	2	I
	AN365-1032	. . NUT	4	I
	AN960D10	. . WASHER	6	I
	AN960D10L	. . WASHER	4	I
		———*———		
	42S8460-14	. . STRIP, Reinforcement	1	I
	42S8018-1	. TRACK INSTALLATION, Cabin door lower	1	AU
-25	42S8018-401	. . TRACK ASSEMBLY, Lower	1	AU
-26	42S8246-1	. . BRACKET ASSEMBLY, Lower	5	AU
	or			
	42S8264-1	. . BRACKET ASSEMBLY, Lower	5	AU
	42S8245-1	. . BRACKET ASSEMBLY, Lower	1	AU
	or			
	42S8204-1	. . BRACKET ASSEMBLY, Lower	1	AU
		Attaching Parts		
	AN525-10R11	. . SCREW (Used with 42S8246-1 and 42S8264-1)	2	AU
	NAS464-3A8	. . BOLT (Used with 42S8245-1 and 42S8204-1)	1	AU
	AN525-10R14	. . SCREW (Used with 42S8245-1 and 42S8204-1)	1	AU
	AN364-1032	. . NUT	2	AU
	AN960D10	. . WASHER (Used with 42S8245-1 and 42S8204-1)	2	AU
	AN960C10L	. . WASHER (Used with 42S8246-1 and 42S8264-1)	2	AU

Figure and Index Number	Part Number	Description 1 2 3 4 5 6 7	Units per Assembly	Usable On Code
18A-	AN960D10L	. . WASHER	1	AU
	AN960D10L	. . WASHER (Used with 42S8245-1 and 42S8204-1)	2	AU
		———*———		
	42S8018-3	. TRACK INSTALLATION, Cabin door upper	1	AU
-27	42S8018-402	. . TRACK ASSEMBLY, Upper	1	AU
-28	42S8069-1	. . BRACKET CASTING, Upper	6	AU
	or			
	22S8083-3	. . BRACKET ASSEMBLY, Upper	3	AU
	42S8265-1	. . BRACKET ASSEMBLY, Upper	3	AU
		Attaching Parts		
	AN525-10R10	. . SCREW (Used with 42S8069-1 and 22S8083-3)	2	AU
	AN525-10R11	. . SCREW (Used with 42S8069-1 and 42S8265-1)	2	AU
	AN365-1032	. . NUT (Used with 42S8069-1 and 22S8083-3)	2	AU
	AN960D10L	. . WASHER (Used with 42S8069-1 and 22S8083-3)	2	AU
	AN960C10L	. . WASHER (Used with 42S8069-1 and 42S8265-1)	2	AU
		———*———		
	42S8483-2	. STOP INSTALLATION, Cabin door	1	I
-29	42S8479-1	. . BRACKET	1	I
		Attaching Parts		
-30	AN525-10R10	. . SCREW	3	I
	AN365-1032	. . NUT	3	I
	AN960D10	. . WASHER	6	I
	AN960D10L	. . WASHER	3	I
		———*———		
-31	42S8483-5	. . SPRING AND CUSHION ASSEMBLY	1	I
		Attaching Parts		
-32	AN525-832R8	. . SCREW	2	I
	AN365-832	. . NUT	2	I
	AN960D8L	. . WASHER	4	I
		———*———		
	42S8483-6	. . . STRAP	1	I
	42S8483-3	. . . CUSHION	1	I
	42S8480-1	. . . SPRING	1	I
	42S8018-9	. JETTISON MECHANISM INSTALLATION, Cabin door	1	AU
-33	42S8273-1	. . HANDLE ASSEMBLY, Door jettison	1	AU
		Attaching Parts		
	AN392-25	. . PIN, Flat head	2	
	AN381-2-8	. . PIN, Cotter	2	
	AN960C4	. . WASHER	2	
	22S8018-19	. . COLLAR	2	
		———*———		
■	22S8018-21	. . PLUG	2	
-34	22S8079-5	. . TUBE ASSEMBLY, Upper	1	
-35	22S8079-3	. . TUBE ASSEMBLY, Lower	1	
■	22S8018-17	. . PLUG	2	
	NAS548P4-6	. . SCREW	2	
	NAS43DD8-37	. . SPACER (Used with 42S8079-3 and -5)	2	FB
	NAS43DD8-37	. . SPACER (Used with 22S8079-5)	1	FC
	NAS43DD8-44	. . SPACER (Used with 42S8079-3)	1	FC
	NAS43DD8-17	. . SPACER (Used with 42S8079-3)	1	FC
■	AN960D816	. . WASHER (Used with 22S8079-5)	1	FC
	22S8079-1	. . BELLCRANK ASSEMBLY	2	
		Attaching Parts		
	AN392-21	. . PIN, Flat head	2	
	AN381-2-8	. . PIN, Cotter	2	
	AN960C4	. . WASHER	2	
		———*———		
-36	NAS364-1DD1188	. . ROD ASSEMBLY	1	AU
-37	NAS364-1DD1062	. . ROD ASSEMBLY	1	AU
	or			
	NAS364-1AA1062	. . ROD ASSEMBLY	1	AU
		Attaching Parts		
	AN23-14	. . BOLT	1	
	AN23-16	. . BOLT	1	
	AN381-2-12	. . PIN, Cotter	2	
	AN320-3	. . NUT	2	
	AN960C10L	. . WASHER (Used with AN23-14)	1	

Figure and Index Number	Part Number	Description 1 2 3 4 5 6 7	Units per Assembly	Usable On Code
18A-	AN960D10L	. . WASHER (Used with AN23-16)	2	
		———*———		
-38	22S8077-3	. . ARM, Door jettison mechanism	2	AU
		Attaching Parts		
	AN4-31	. . BOLT	1	AU
	AN381-2-14	. . PIN, Cotter	1	
	AN310-4	. . NUT	1	
	AN960D416	. . WASHER	2	
	AN960D416L	. . WASHER	1	
		———*———		
	NAS43DD4-166	. . SPACER	2	AU
-39	NAS364-1HH1548	. . ROD ASSEMBLY	1	
-40	NAS364-1HH1792	. . ROD ASSEMBLY	1	
		Attaching Parts		
	AN393-11	. . PIN, Flat hd	2	
	AN381-2-8	. . PIN, Cotter	2	
	AN960C10L	. . WASHER	2	
		———*———		
	42S8016-1	DOOR INSTALLATION, Rescue	1	AV
	42S8016-3	DOOR INSTALLATION, Rescue	1	I
-41	22S8017-201	. DOOR ASSEMBLY, Rescue	1	AV
	42S8456-1	. DOOR ASSEMBLY, Rescue	1	I
-42	42S8467-1	. . LATCH ASSEMBLY, Cabin and rescue door	1	
	2S	. . . HANDLE ASSEMBLY, Outside (DY)	1	
		Attaching Parts		
	AN505CR8-10	. . . SCREW	2	
		———*———		
	42S8460-25	. . . GASKET	1	
	42S8467-3	. . . LEVER ASSEMBLY	1	
		Attaching Parts		
	AN509-10R15	. . . SCREW	1	
	AN509-10R23	. . . SCREW	1	
	AN364-1032	. . . NUT	2	
	AN960-10	. . . WASHER	1	
	PHS153-1-3-12D	. . . WASHER	1	
		———*———		
	42S8467-5	. . . . FOLLOWER	1	
	42S8467-6	. . . . SHAFT, Rocker	1	
	42S8467-4	. . . . LEVER	1	
	42S8467-7	. . . SPACER	1	
	42S8467-8	. . . PLATE, Guide	1	
	42S8467-10	. . . PLATE, Cover	1	
		Attaching Parts		
	AN515DD8-6	. . . SCREW	4	
		———*———		
	42S8467-9	. . . SPRING	1	
	42S8468-3	. . . CAM	1	
	or			
	42S8468-1	. . . CAM	1	
	42S8469-1	. . . CASE ASSEMBLY, Latch	1	
		Attaching Parts		
	AN525-416R11	. . . SCREW	2	
	AN525-416R10	. . . SCREW	2	
	AN525-416R9	. . . SCREW	2	
	AN365-428	. . . NUT	2	
	AN960D416	. . . WASHER	2	
	AN960D416L	. . . WASHER	4	
		———*———		
	NAS77A-8-84	. . . . BUSHING	1	
	NAS76A-10-030	. . . . BUSHING	1	

Figure and Index Number	Part Number	Description 1 2 3 4 5 6 7	Units per Assembly	Usable On Code
18A-	RL21SB-6	. . . . RING, Lock (ROSN)	2	
	R104SB-6L	. . . . INSERT (ROSN)	2	
	42S8511-1	. . . PLATE ASSEMBLY, Cover	1	
■ -43	42S8417-1	. . STRAP ASSEMBLY	1	
-44	22S8015-171	. . WINDOW ASSEMBLY	1	
	22S8015-69	. . . WINDOW	1	
-45	22S8017-9	. . SEAL	1	
	22S8017-7	. . STRIP, Filler	1	
-46	22S8069-1	. . FITTING, Swivel roller support	1	
		Attaching Parts		
	AN810C6	. . NUT	1	
	AN381-3-12	. . PIN, Cotter	1	
	AN945-6P	. . WASHER	1	
		———*———		
	NAS73-6-107	. . BUSHING	1	
	F-835	. . BEARING (AXD)	2	
	42S8495-1	. . STUD ASSEMBLY	1	J,AV
		Attaching Parts		
	AN509-416R11	. . SCREW	2	J,AV
	AN364-428A	. . NUT	2	J,AV
	AN960C416L	. . WASHER	2	J,AV
		———*———		
	42S8496-1	. . BRACKET ASSEMBLY	1	J,AV
	42S8518-1	. . BRACKET	1	I
	or			
	42S8478-1	. . BRACKET	1	I
		Attaching Parts		
	AN23-8A	. . BOLT	2	J,AV
	AN525-10R28	. . SCREW	6	I
	AN364-1032	. . NUT	2	J,AV
	AN365-1032	. . NUT	6	I
	AN960D10	. . WASHER	6	I
	AN960D10L	. . WASHER	16	
		———*———		
	22S8015-152	. . SPACER	2	J,AV
-47	17S8070-7	. . FITTING, Sliding door roller	3	J,AV
	17S8070-1	. . FITTING, Sliding door roller	3	I
		Attaching Parts		
	AN525-10R18	. . SCREW	3	AV
	AN23-10A	. . BOLT	3	I
	AN23-8A	. . BOLT (Used on lower fittings only)	3	I
	AN365-1032	. . NUT	3	AV
	AN364-1032	. . NUT	3	I
	AN960D10	. . WASHER	AR	AV
	AN960D10L	. . WASHER	6	I
		———*———		
-48	42S8497-1	. . BRACKET ASSEMBLY, Lower roller fitting support	2	J,AV
		Attaching Parts		
	AN23-8A	. . BOLT	3	J,AV
		———*———		
	42S8501-1	. . BRACKET, Outer	2	I
		Attaching Parts		
	AN525-10R10	. . SCREW	2	I
	AN365-1032	. . NUT	2	I
	AN960D10	. . WASHER	2	I
	AN960D10L	. . WASHER	2	I
		———*———		
	42S8481-1	. . BRACKET, Inner	2	I
		Attaching Parts		
	AN525-10R11	. . SCREW	3	I
	AN365-1032	. . NUT	3	I

Figure and Index Number	Part Number	1 2 3 4 5 6 7 Description	Units per Assembly	Usable On Code
18A-	AN960D10	. . WASHER	3	I
	AN960D10L	. . WASHER	3	I
		———*———		
-49	22S8017-182	. . SEAL, Bulb	1	AV
	42S8456-13	. . SEAL, Bulb	1	DH
	42S8456-30	. . SEAL, Bulb	1	GZ
	42S8456-32	. . SEAL, Bulb	1	DU
-50	22S8017-183	. . SEAL, Bulb	1	AV
	42S8456-12	. . SEAL, Bulb	1	DH
	42S8456-29	. . SEAL, Bulb	1	GZ
	42S8456-31	. . SEAL, Bulb	1	DU
		Attaching Parts		
	AN515-6R6	. . SCREW	64	I
	22NKM-62	. . NUT, Cap (EN)	64	I
	AN960D6L	. . WASHER	129	I
	42S8456-38	. . SHIM	2	
		———*———		
-50A	42S8484-1	. . BUMPER, Rescue door	1	I
	42S8019-1	. TRACK INSTALLATION, Rescue door lower	1	AU
-51	42S8019-401	. . TRACK ASSEMBLY, Lower	1	AU
-52	42S8248-1	. . BRACKET ASSEMBLY	4	AU
-53	42S8248-2	. . BRACKET ASSEMBLY	1	AU
		Attaching Parts		
	AN525-10R11	. . SCREW	2	
	AN364-1032	. . NUT	2	
	AN960D10	. . WASHER	AR	AU
	AN960D10L	. . WASHER	AR	
	AN960C10L	. . WASHER	AR	
		———*———		
	22S8081-1	. . STOP ASSEMBLY	1	
		Attaching Parts		
	AN525-10R20	. . SCREW	1	
	AN364-1032	. . NUT	1	
	AN960D10L	. . WASHER	2	
		———*———		
	42S8019-3	. TRACK INSTALLATION, Rescue door upper	1	AU
-54	42S8019-402	. . TRACK ASSEMBLY, Upper	1	AU
-55	42S8070-1	. . BRACKET ASSEMBLY	1	AU
-56	42S8072-1	. . BRACKET ASSEMBLY	2	AU
		Attaching Parts		
	AN525-10R10	. . SCREW (Used with 42S8072-1)	4	AU
	AN525-10R10	. . SCREW (Used with 42S8070-1)	1	AU
	AN525-10R11	. . SCREW (Used with 42S8070-1)	1	AU
	AN364-1032	. . NUT (Used with 42S8072-1)	4	AU
	AN364-1032	. . NUT (Used with 42S8070-1)	1	AU
	AN960D10	. . WASHER (Used with 42S8072-1)	4	AU
	AN960D10	. . WASHER (Used with 42S8070-1)	1	AU
	AN960D10L	. . WASHER (Used with 42S8072-1)	2	AU
	AN960D10L	. . WASHER (Used with 42S8070-1)	1	AU
		———*———		
	22S8081-1	. . STOP ASSEMBLY	1	
	42S8483-1	. STOP INSTALLATION, Rescue door	1	I
-56A	42S8479-1	. . BRACKET	1	I
		Attaching Parts		
-56B	AN525-10R10	. . SCREW	3	I
	AN365-1032	. . NUT	3	I
	AN960D10	. . WASHER	6	I
	AN960D10L	. . WASHER	3	I
		———*———		
-56C	42S8483-5	. . SPRING AND CUSHION ASSEMBLY	1	I
		Attaching Parts		
-56D	AN525-832R8	. . SCREW	2	I

Figure and Index Number	Part Number	1 2 3 4 5 6 7 Description	Units per Assembly	Usable On Code
18A-	AN365-832	. . NUT	2	I
	AN960D8L	. . WASHER	4	I
		———*———		
	42S8483-6	. . . STRAP	1	I
	42S8483-3	. . . CUSHION	1	I
	42S8480-1	. . . SPRING	1	I
	42S8019-9	. JETTISON MECHANISM INSTALLATION, Rescue door	1	AU
-57	42S8095-1	. . HANDLE ASSEMBLY	1	AU
		Attaching Parts		
	AN392-25	. . PIN, Flat head	1	
	AN381-2-8	. . PIN, Cotter	1	
	AN960C4	. . WASHER	1	
	22S8018-19	. . COLLAR	1	
		———*———		
	22S8019-51	. . PLUG	1	
-58	42S8297-4	. . FITTING, Sleeve	1	AU
	or			
	42S8297-1	. . TUBE ASSEMBLY, Upper	1	AU
		Attaching Parts		
	AN23-15A	. . BOLT	2	
	AN364-1032	. . NUT	2	
	AN960C10	. . WASHER	2	
		———*———		
	22S8019-25	. . TUBE	1	
-59	42S8251-1	. . TUBE ASSEMBLY, Lower	1	
	22S8018-17	. . PLUG	1	
	22S8079-1	. . BELLCRANK ASSEMBLY	2	
		Attaching Parts		
	AN392-21	. . PIN, Flat head	2	
	AN381-2-8	. . PIN, Cotter	2	
	AN960C4	. . WASHER	2	
		———*———		
-60	NAS364-1DD1188	. . ROD ASSEMBLY	1	AU
-61	NAS364-1DD1062	. . ROD ASSEMBLY	1	AU
	or			
	NAS364-1AA1062	. . ROD ASSEMBLY	1	AU
		Attaching Parts		
	AN23-14	. . BOLT	2	
	AN23-16	. . BOLT	2	
	AN381-2-12	. . PIN, Cotter	2	
	AN320-3	. . NUT	2	
	AN960C10L	. . WASHER	1	
	AN960D10L	. . WASHER	2	
		———*———		
-62	22S8077-3	. . ARM, Door jettison mechanism	2	
		Attaching Parts		
	AN4-32	. . BOLT	1	
	AN381-2-14	. . PIN, Cotter	1	
	AN310-4	. . NUT	1	
	AN960D416	. . WASHER	2	
	AN960D416L	. . WASHER	1	
		———*———		
	NAS43DD4-166	. . SPACER	2	
-63	NAS364-1HH 1548	. . ROD ASSEMBLY	1	AU
-64	NAS364-1HH 1792	. . ROD ASSEMBLY	1	AU
		Attaching Parts		
	AN393-11	. . PIN, Flat head	2	
	AN381-2-8	. . PIN, Flat head	2	
	AN960C10L	. . WASHER	2	
		———*———		

Structure

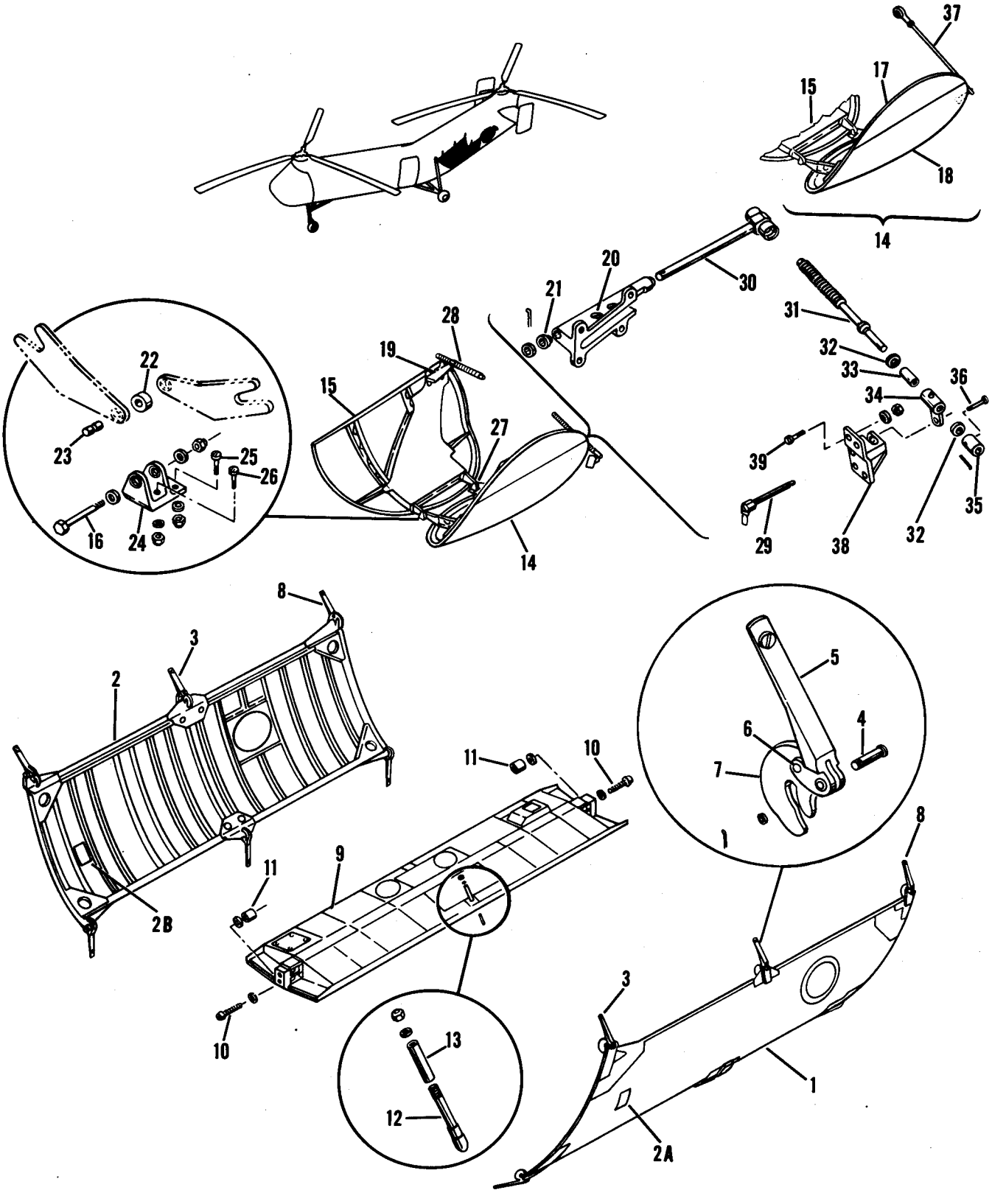

Figure 19. Engine Air Exit Doors, Hatch and Keel

Figure and Index Number	Part Number	Description 1 2 3 4 5 6 7	Units per Assembly	Usable On Code
19-	22S3002-1	HATCH INSTALLATION, Engine	1	J
	42S3002-1	HATCH INSTALLATION, Engine	1	AV
	42S3002-4	HATCH INSTALLATION, Engine	1	I
	22S3002-5	. DOOR AND LATCH INSTALLATION, LH	1	A
	22S3002-101	. DOOR AND LATCH INSTALLATION, LH	1	E
	22S3002-103	. DOOR AND LATCH INSTALLATION, LH	1	AU
	22S3002-6	. DOOR AND LATCH INSTALLATION, RH	1	A
	22S3002-102	. DOOR AND LATCH INSTALLATION, RH	1	E
	22S3002-104	. DOOR AND LATCH INSTALLATION, RH	1	AU
-1	22S8012-1	. . DOOR ASSEMBLY, LH	1	A
■	22S8012-101	. . DOOR ASSEMBLY, LH	1	ED
	22S8012-419	. . DOOR ASSEMBLY, LH	1	EG,EH
-2	22S8012-2	. . DOOR ASSEMBLY, RH	1	A
■	22S8012-102	. . DOOR ASSEMBLY, RH	1	ED
	22S8012-420	. . DOOR ASSEMBLY, RH	1	EG,EH
-2A	22S8012-55	. . . DOOR ASSEMBLY, Fire LH	1	J,DN
	22S8012-409	. . . DOOR ASSEMBLY, Fire LH	1	DO
-2B	22S8012-56	. . . DOOR ASSEMBLY, Fire RH	1	J,DN
	22S8012-410	. . . DOOR ASSEMBLY, Fire RH	1	DO
-3	22S3064-405	. . LATCH ASSEMBLY	5	
	or			
	22S3064-401	. . LATCH ASSEMBLY	5	
		Attaching Parts		
-4	AN394-43	. . PIN, Clevis	1	
	AN381-2-7	. . PIN, Cotter	1	
	AN960-416L	. . WASHER	1	
		———*———		
-5	22S3152-7	. . . HANDLE (Used with 22S3064-405)	1	
	22S3152-1	. . . HANDLE (Used with 22S3064-401)	1	
		Attaching Parts		
-6	22S3064-7	. . . PIN	1	
		———*———		
-7	22S3062-1	. . . HOOK	1	
	22S3064-5	. . . TUBE	1	
-8	22S3064-406	. . LATCH ASSEMBLY	1	
	or			
	22S3064-402	. . LATCH ASSEMBLY	1	
		Attaching Parts		
	AN394-43	. . PIN, Clevis	1	
	AN381-2-7	. . PIN, Cotter	1	
	AN960-416L	. . WASHER	1	
		———*———		
	22S3152-8	. . . HANDLE (Used with 22S3064-406)	1	
	22S3152-2	. . . HANDLE (Used with 22S3064-402)	1	
		Attaching Parts		
	22S3064-7	. . . PIN	1	
		———*———		
	22S3062-1	. . . HOOK	1	
	22S3064-5	. . . TUBE	1	
	AJ5-35	. FASTENER (DZ) (Used with 22S3064-401 and -402)	2	
	AJ5-40	. FASTENER (DZ) (Used with 22S3064-401 and -402)	6	
	AJ5-45	. FASTENER (DZ) (Used with 22S3064-401 and -402)	2	
	AJ5-50	. FASTENER (DZ)	2	
	AJ5-60	. FASTENER (DZ) (Used with 22S3064-405 and -406)	10	
	GA4-250	. GROMMET (DZ) (Used with 22S3064-401 and -402)	12	
	5	. RING, Retaining (DZ) (used with 22S3064-405 and -406)	12	
	S5A200	. SPRING (DZ)	10	
	S5A225	. SPRING (DZ)	2	
	22S8013-1	. KEEL INSTALLATION, Removable	1	J
	22S8013-101	. KEEL INSTALLATION, Removable	1	CW,DV
	22S8013-104	. KEEL INSTALLATION, Removable	1	EH,EI

Figure and Index Number	Part Number	Description 1 2 3 4 5 6 7	Units per Assembly	Usable On Code
19-9	22S8013-3	. . KEEL ASSEMBLY, Removable	1	J
	22S8013-103	. . KEEL ASSEMBLY, Removable	1	CW,DV
	22S8013-108	. . KEEL ASSEMBLY, Removable	1	EH,EI
		Attaching Parts		
-10	NAS149-35	. . BOLT	4	J
	NAS149-36	. . BOLT	4	AU
-11	NAS443-9	. . NUT	4	
	NAS143-9	. . WASHER (Under nut)	4	
	NAS143-9C	. . WASHER (Under hd)	4	
-12	22S3065-1	. . PIN, Engine hatch door	2	
		Attaching Parts		
	AN364-428	. . NUT	1	
	AN960D416	. . WASHER	AR	
	AN960-416L	. . WASHER	AR	
-13	22S3066-1	. . SPACER	2	
	22S8006-1	DOOR INSTALLATION, Engine air exit	1	Y,AP
	22S8007-1	DOOR INSTALLATION, Engine air exit	1	GQ
-14	22S8145-1	. DOOR ASSEMBLY, LH	1	J,AP
	22S8145-101	. DOOR ASSEMBLY, LH	1	AO,BU
-15	22S8146-1	. DOOR ASSEMBLY, RH	1	J,AP
	22S8146-101	. DOOR ASSEMBLY, RH	1	AO,BU
		Attaching Parts		
-16	AN4-15A	. BOLT	2	J,AV
	AN365-428	. NUT	2	J,AV
	AN960D416	. WASHER	4	J,AV
-17	22S8145-3	. . DOOR ASSEMBLY, Top LH	1	J,AV
-18	22S8145-5	. . DOOR ASSEMBLY, Bottom LH	1	J,AV
		Attaching Parts		
	AN253-2-3300	. . PIN, Hinge	1	J,AV
	AN525-10R8	. . SCREW	2	J,AV
	AN365-1032	. . NUT	2	J,AV
	AN960D10	. . WASHER	4	J,AV
	22S8151-1	. . . HOUSING ASSEMBLY, Follower LH	1	J,AV
-19	22S8151-2	. . . HOUSING ASSEMBLY, Follower RH	1	J,AV
		Attaching Parts		
	AN525-10R10	. . . SCREW	4	J,AV
	AN365-1032	. . . NUT	4	J,AV
	AN960D10	. . . WASHER	8	J,AV
-20	22S8151-3	. . . . HOUSING, LH	1	J,AV
	22S8151-4	. . . . HOUSING, RH	1	J,AV
-21	NAS77-6-38	. . . . BUSHING	2	J,AV
-22	22S8150-5	. FILLER	2	J,AV
-23	NAS73-4-012	. BUSHING	2	J,AV
-24	22S8148-1	. HINGE ASSEMBLY, Fwd	1	Y,AP
	22S8148-4	. HINGE ASSEMBLY, Fwd	1	GQ
		Attaching Parts		
-25	AN525-10R10	. SCREW	2	Y,AP
	AN525-10R11	. SCREW	2	GQ
-26	AN525-10R14	. SCREW	2	J,AV
	AN365-1032	. NUT	4	J,AV
	AN960D10	. WASHER	8	J,AV
-27	22S8149-1	. HINGE ASSEMBLY, Aft	1	Y,AP
	22S8149-401	. HINGE ASSEMBLY, Aft	1	GQ
		Attaching Parts		
	AN525-10R10	. SCREW	4	Y,AP

Figure and Index Number	Part Number	1 2 3 4 5 6 7 Description	Units per Assembly	Usable On Code
19-	AN525-10R11	. SCREW	4	GQ
	AN365-1032	. NUT	4	J,AV
	AN960D10	. WASHER	8	J,AV
		———*———		
-28	22S8155-3	. MECHANISM ASSEMBLY, Door operating	2	Y,AP
	22S8155-3	. MECHANISM ASSEMBLY, Door operating	1	GQ
		Attaching Parts		
-29	A417	. PIN, Pip (AVDE)	1	J,AV
		———*———		
-30	22S8152-5	. . FOLLOWER	1	J,AV
		Attaching Parts		
	AN381-2-12	. . PIN, Cotter	1	J,AV
	AN960D616	. . WASHER	1	J,AV
		———*———		
-31	22S8153-3	. . SCREW, Engine air exit door	1	J,AV
-32	NAS143-6	. . WASHER	2	J,AV
-33	NAS73-6-104	. . BUSHING	1	J,AV
-34	22S8154-4	. . BLOCK ASSEMBLY, Pilot	1	J,AV
-35	12B-064	. . NUT, Internal wrenching (EN)	1	J,AV
		Attaching Parts		
-36	AN392-23	. . PIN, Flat hd	1	J,AV
	AN381-2-6	. . PIN, Cotter	1	J,AV
		———*———		
-37	22C2330-6	. ROD ASSEMBLY	1	GQ
		Attaching Parts		
	22S8192-1	. BOLT, Shoulder	1	GQ
	AN174-21	. BOLT	1	GQ
	AN381-2-14	. PIN, Cotter (used with 22S8192-1)	1	GQ
	AN381-2-8	. PIN, Cotter (used with AN174-21)	1	GQ
	AN310-4	. NUT	2	GQ
	AN960D416	. WASHER	4	GQ
		———*———		
	22C1753-83	. SPACER (Used with AN174-21)	2	GQ
-38	22S8156-1	. FITTING ASSEMBLY, Air exit door LH	1	Y,AP
	22S8156-2	. FITTING ASSEMBLY, Air exit door RH	1	Y,AP
	22S8156-402	. FITTING ASSEMBLY, Air exit door RH	1	GQ
		Attaching Parts		
-39	AN525-10R10	. SCREW	4	J,AV
	AN365-1032	. NUT	4	J,AV
	AN960D10	. WASHER (Four used with 22S8156-402)	8	J,AV
	AN960D10L	. WASHER (Used with 22S8156-402)	4	J,AV
		———*———		

Structure

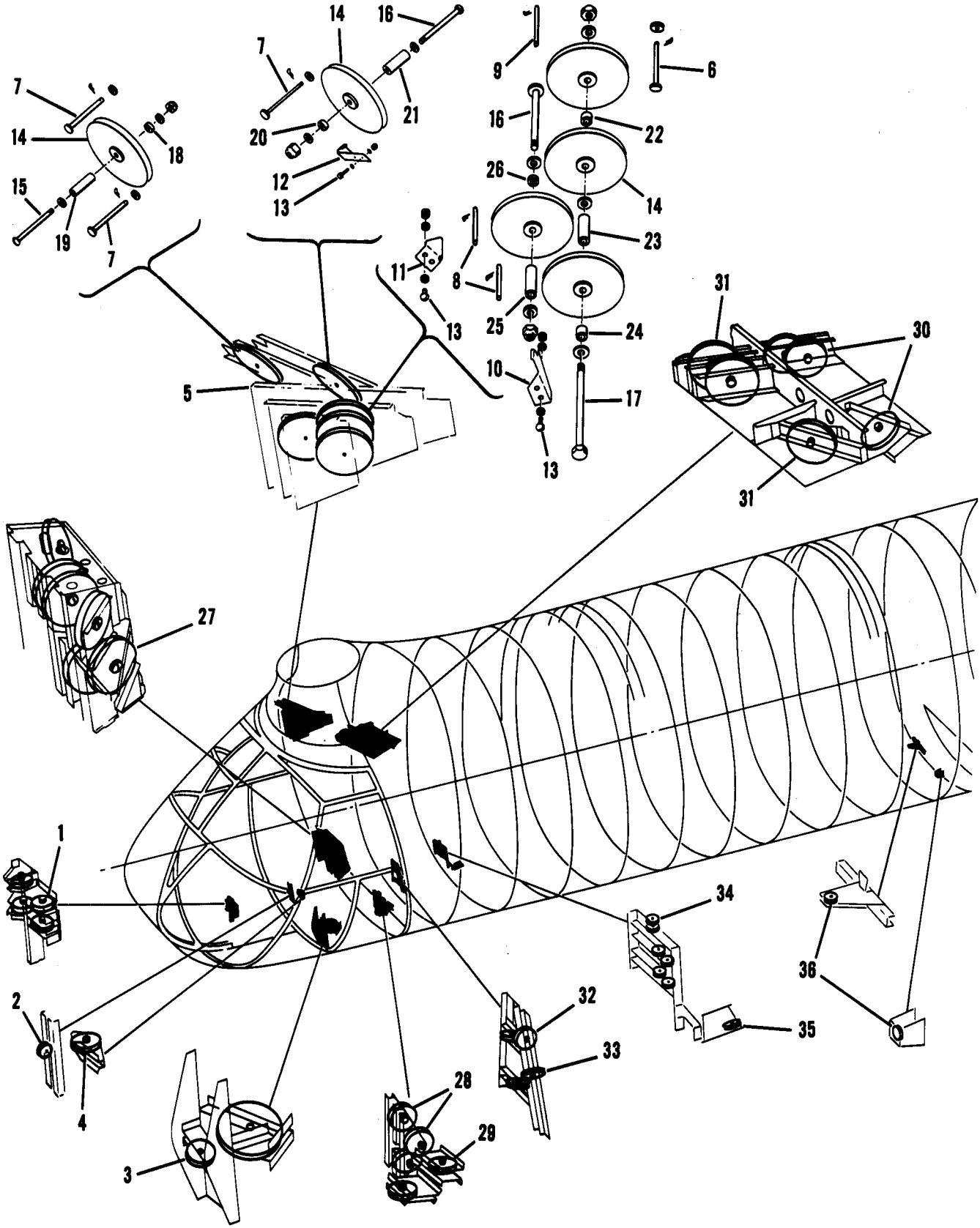

Figure 20. Pulley Brackets and Pulleys, YH-21 and H-21A (Sheet 1 of 2)

Structure

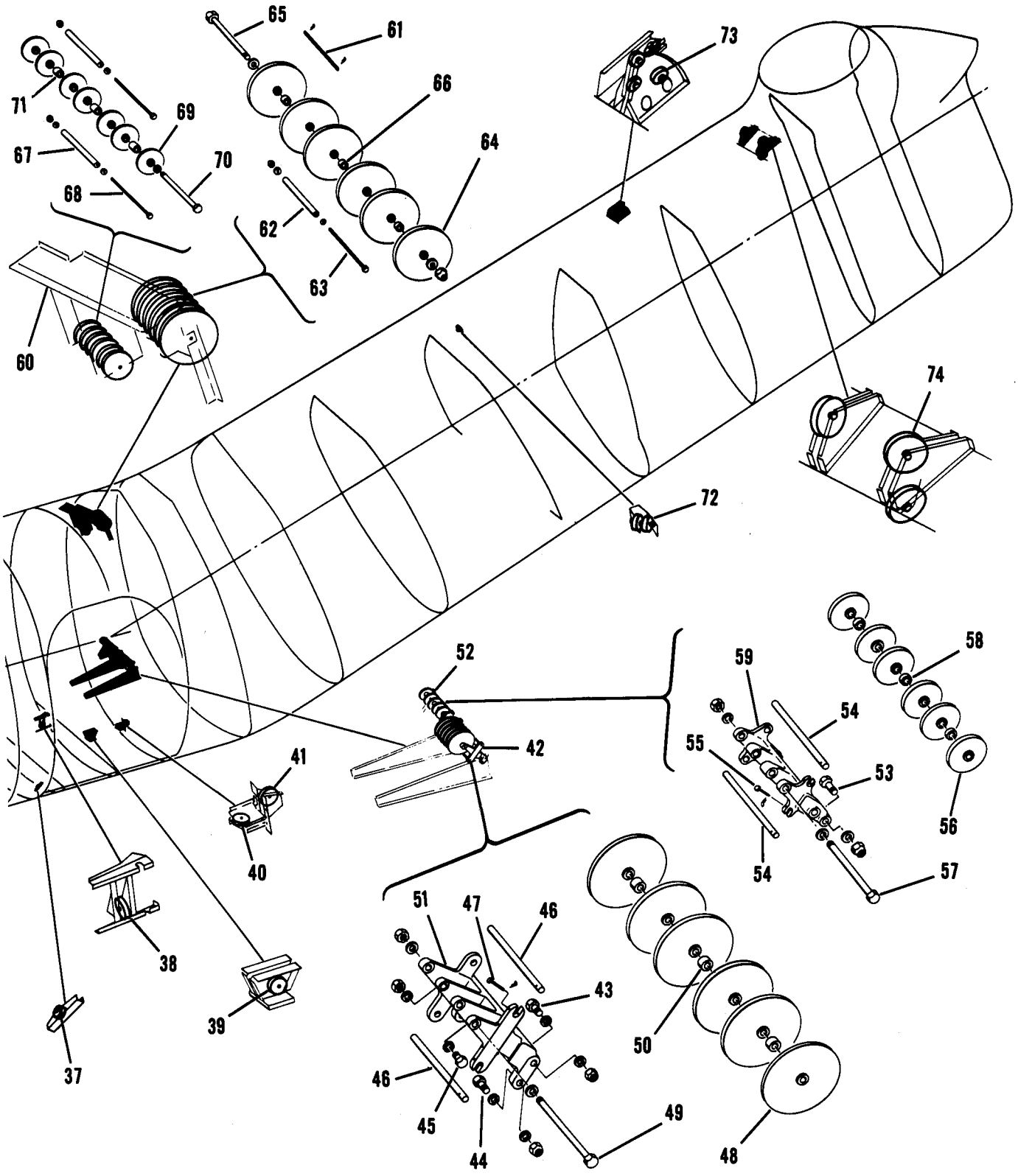

Figure 20. Pulley Brackets and Pulleys, YH-21 and H-21A (Sheet 2 of 2)

Figure and Index Number	Part Number	Description 1 2 3 4 5 6 7	Units per Assembly	Usable On Code
20-	22S2048-1	BRACKET INSTALLATION, Carb and mixture pulley sta 67	1	J
	AN392-19	. PIN, Flat hd	8	
	AN381-2-8	. PIN, Cotter	8	
	AN960D6	. WASHER	8	
-1	AN210-2B	. PULLEY	4	
		Attaching Parts		
	AN3-10A	. BOLT	1	
	AN365-1032	. NUT	1	
	AN960D10	. WASHER	4	
		———*———		
	22S2096-1	BRACKET INSTALLATION, Cargo release pulley sta 91.880	1	J
	AN392-17	. PIN, Flat hd	2	J
	AN381-2-6	. PIN, Cotter	2	
	AN960D4	. WASHER	2	
	22S2096-4	. GUARD, Cable	1	J
-2	AN210-1B	. PULLEY	1	
		Attaching Parts		
	AN525-10R44	. SCREW	1	J
	AN365-1032	. NUT	1	
	AN960D10	. WASHER	4	
		———*———		
	22S2018-1	BRACKETS INSTALLATION, Pulley sta 91.880	1	J
	22S2018-2	BRACKETS INSTALLATION, Pulley sta 91.880	1	J,AV
	AN392-27	. PIN, Flat hd	2	
	AN392-31	. PIN, Flat hd	2	
	AN381-2-8	. PIN, Cotter	4	
	AN960D6	. WASHER	4	
-3	AN210-4B	. PULLEY	1	
	AN210-5B	. PULLEY	1	
		Attaching Parts		
	AN24-18A	. BOLT	1	
	AN26-22A	. BOLT	1	
	AN364-428	. NUT	1	
	AN364-624	. NUT	1	
	AN960D416	. WASHER	4	
	AN960D616	. WASHER	4	
		———*———		
	22S2098-1	BRACKET INSTALLATION, Collective pitch idler pulley	1	J,AV
	AN392-25	. PIN, Flat hd	1	J,AV
	AN381-2-6	. PIN, Cotter	1	J,AV
	AN960D4L	. WASHER	1	J,AV
-4	AN210-3B	. PULLEY	1	J,AV
		Attaching Parts		
	AN24-18	. BOLT	1	J,AV
	AN381-2-12	. PIN, Cotter	1	J,AV
	AN320-4	. NUT	1	J,AV
	AN960D416	. WASHER	3	J,AV
	AN960D416L	. WASHER	1	J,AV
		———*———		
-5	22S2014-1	BRACKETS INSTALLATION, Upper pulley sta 96	1	J,AV
-6	AN392-61	. PIN, Flat hd	1	J,AV
-7	AN393-87	. PIN, Flat hd	3	J,AV
	AN381-2-5	. PIN, Cotter	4	J,AV
	AN960D4	. WASHER	1	J,AV
	AN960D10L	. WASHER	3	J,AV
-8	22C1713-3	. PIN, Upper controls cable guard	2	J,AV
-9	22C1713-6	. PIN, Upper controls cable guard	1	J,AV
		Attaching Parts		
	AN381-2-5	. PIN, Cotter	1	J,AV
		———*———		
-10	22S2070-1	. GUARD, Cable	1	J,AV
-11	22S2070-2	. GUARD, Cable	1	J,AV

Figure and Index Number	Part Number	Description 1 2 3 4 5 6 7	Units per Assembly	Usable On Code
20-12	22S2070-3	. GUARD, Cable	1	J,AV
		Attaching Parts		
-13	AN23-8A	. BOLT	2	J,AV
	AN365-1032	. NUT	2	J,AV
	AN960D10	. WASHER	4	J,AV
		———*———		
-14	AN210-5B	. PULLEY	6	J,AV
		Attaching Parts		
-15	AN26-50A	. BOLT	1	J,AV
-16	AN26-52A	. BOLT	2	J,AV
-17	AN6-51A	. BOLT	1	J,AV
	AN364-624	. NUT	3	J,AV
	AN365-624	. NUT	1	J,AV
	AN960D616	. WASHER	6	J,AV
	AN960D616L	. WASHER	6	J,AV
		———*———		
-18	22C1753-58	. SPACER	1	J,AV
-19	22C1753-57	. SPACER	1	J,AV
-20	22C1753-55	. SPACER	1	J,AV
-21	22C1753-51	. SPACER	1	J,AV
-22	22C1753-52	. SPACER	1	J,AV
-23	22C1753-56	. SPACER	1	J,AV
-24	22C1753-59	. SPACER	1	J,AV
-25	22C1753-53	. SPACER	1	J,AV
-26	22C1753-54	. SPACER	1	J,AV
	22S2068-1	BRACKET INSTALLATION, Pulley sta 97.360	1	J,AV
	AN392-29	. PIN, Flat hd	4	J,AV
	22S2068-58	. PIN, Cable guard	8	J,AV
	AN381-2-8	. PIN Cotter	12	J,AV
	AN960D6	. WASHER	4	J,AV
-27	AN210-5B	. PULLEY	6	J,AV
		Attaching Parts		
	AN26-19A	. BOLT	5	J,AV
	AN6H13A	. BOLT	1	J,AV
	AN364-624	. NUT	5	J,AV
	AN995C41	. WIRE, Lock	AR	J,AV
	AN960D616	. WASHER	11	J,AV
		———*———		
	22S2013-1	SUPPORT INSTALLATION, Lower inbd pulley sta 104	1	J,AV
	AN392-17	. PIN, Flat hd	2	
	AN392-23	. PIN, Flat hd	3	J,AV
	AN381-2-6	. PIN Cotter	5	J,AV
	AN960D6L	. WASHER	5	J,AV
-28	AN210-2B	. PULLEY	2	
-29	AN210-3B	. PULLEY	3	J,AV
		Attaching Parts		
	AN23-14A	. BOLT	2	J,AV
	AN24-16A	. BOLT	3	J,AV
	AN364-1032	. NUT	2	
	AN364-428	. NUT	3	J,AV
	AN960D10	. WASHER	6	
	AN960D416	. WASHER	9	J,AV
	AN960D10L	. WASHER	2	
	AN960D416L	. WASHER	3	J,AV
		———*———		
	22S2016-1	BRACKETS INSTALLATION, Upper pulley sta 111	1	J,AV
	AN392-31	. PIN, Flat hd	6	J,AV
	AN392-25	. PIN, Flat hd	2	
	AN392-35	. PIN, Flat hd	2	J,AV
	AN392-39	. PIN, Flat hd	1	J,AV
	AN392-41	. PIN, Flat hd	1	J,AV
	AN381-2-5	. PIN, Cotter	12	J,AV

Figure and Index Number	Part Number	1 2 3 4 5 6 7 Description	Units per Assembly	Usable On Code
20-	AN960D4	. WASHER	12	J,AV
-30	AN210-4B	. PULLEY	3	
-31	AN210-5B	. PULLEY	3	
		Attaching Parts		
	AN24-19A	. BOLT	1	J,AV
	AN24-21A	. BOLT	1	J,AV
	AN24-25A	. BOLT	1	J,AV
	AN26-20A	. BOLT	1	
	AN26-21A	. BOLT	2	J,AV
	AN364-428	. NUT	3	J,AV
	AN364-624	. NUT	3	
	AN960D416	. WASHER	7	J,AV
	AN960D616	. WASHER	10	J,AV
	AN960D616L	. WASHER	2	J,AV
		———*———		
	22C1753-38	. SPACER (Used with AN24-21A bolt)	1	J,AV
	22C1753-42	. SPACER (Used with AN24-25A bolt)	1	J,AV
	22S2019-1	BRACKETS INSTL, Flight controls pulley sta 119.500	1	J,AV
	AN392-25	. PIN, Flat hd	3	
	AN381-2-6	. PIN, Cotter	3	
	AN960D4L	. WASHER	3	
-32	AN210-3B	. PULLEY	3	
		Attaching Parts		
	AN24-18A	. BOLT	2	J,AV
	AN24-22A	. BOLT	1	J,AV
	AN365-428	. NUT	3	
	AN960D416	. WASHER	12	
		———*———		
	22S2269-1	. FILLER (Used with AN24-22A bolt)	2	
	22S2077-1	BRACKETS INSTL, Aft collective pitch pulley sta 119.500	1	J,AV
	AN392-25	. PIN, Flat hd	1	J,AV
	AN381-2-6	. PIN, Cotter	1	J,AV
	AN960D4L	. WASHER	1	J,AV
-33	AN210-3B	. PULLEY	1	J,AV
		Attaching Parts		
	AN24-18A	. BOLT	1	
	AN365-428	. NUT	1	
	AN960D416	. WASHER	4	
		———*———		
	22S2023-1	BRACKETS INSTALLATION, Pulley sta 159.500	1	G,BM
	22S2023-26	BRACKETS INSTALLATION, Pulley sta 159.500	1	BN,BU
	AN392-37	. PIN, Flat hd	3	G,BM
	AN392-23	. PIN, Flat hd	1	G,BM
	AN392-37	. PIN, Flat hd	4	BN,BV
	AN392-45	. PIN, Flat hd	1	
	AN392-19	. PIN, Flat hd	1	
	AN381-2-6	. PIN, Cotter	6	
	AN960D4L	. WASHER	6	
-34	AN210-1B	. PULLEY	6	
		Attaching Parts		
	AN23-22A	. BOLT	1	J,AV
	AN23-24A	. BOLT	2	J,AV
	AN23-27A	. BOLT	2	
	AN364-1032	. NUT	5	
	AN960D10	. WASHER	7	J,AV
	AN960D10L	. WASHER	7	
		———*———		
	22C1753-18	. SPACER (Used with AN23-22A bolt)	1	
	22C1753-17	. SPACER (Used with AN23-24A and AN23-27A bolts)	4	
	22C1753-19	. SPACER (Used with AN23-24A bolt)	2	
	22C1753-16	. SPACER (Used with AN23-27A bolt)	1	
-35	AN210-3B	. PULLEY	1	

Figure and Index Number	Part Number	1 2 3 4 5 6 7 Description	Units per Assembly	Usable On Code
20-		*Attaching Parts*		
	AN24-17A	. BOLT	1	G,BM
	AN24-48A	. BOLT	1	BN,BV
	AN364-428	. NUT	1	
	AN960D416	. WASHER	4	G,BM
	AN960D416	. WASHER	3	BN,BU
	AN960D416L	. WASHER	1	BN,BU
		———*———		
	NAS43DD-4-21	. SPACER	1	BN,BV
	22C1753-70	. SPACER	1	BN,BV
	22S2094-1	BRACKET INSTALLATION, Outbd cargo release sta 311.810	1	J
	22S2094-2	BRACKET INSTALLATION, Center cargo release sta 311.810	1	J
	AN392-17	. PIN, Flat hd	3	J
	AN381-2-6	. PIN, Cotter	3	J
	AN960D4	. WASHER	3	J
-36	AN210-1B	. PULLEY	1	J
		Attaching Parts		
	AN525-10R16	. SCREW	1	J
	AN365-1032	. NUT	1	J
	AN960D10	. WASHER	4	J
		———*———		
	22S2091-1	BRACKET INSTALLATION, Center cargo release sta 311.810	1	J
	AN392-19	. PIN, Flat hd	1	
	AN381-2-8	. PIN, Cotter	1	
	AN960D4	. WASHER	1	
-37	AN210-1B	. PULLEY	1	
		Attaching Parts		
	AN525-10R16	. SCREW	1	
	AN365-1032	. NUT	1	
	AN960D10	. WASHER	4	
		———*———		
	22S2093-1	BRACKET INSTALLATION, Cargo release sta 311.810	1	J
	AN392-33	. PIN, Flat hd	1	
	AN381-2-8	. PIN, Cotter	1	
	AN960D4	. WASHER	1	
-38	AN210-1B	. PULLEY	1	
		Attaching Parts		
	AN525-10R24	. SCREW	1	
	AN365-1032	. NUT	1	
	AN960D10	. WASHER	3	
		———*———		
	NAS43DD-3-20	. SPACER	2	
	22S2097-1	BRACKET INSTALLATION, Cargo release sta 329	1	J
-39	22S2097-10	. BRACKET ASSEMBLY	1	J
		Attaching Parts		
	AN525-10R22	. SCREW	6	J
	AN365-1032	. NUT	6	J
	AN960D10L	. WASHER	12	J
		———*———		
	AN392-17	. . PIN, Flat hd	2	J
	AN381-2-6	. . PIN, Cotter	2	J
	AN210-1B	. . PULLEY	1	J
		Attaching Parts		
	AN525-10R16	. . SCREW	1	J
	AN365-1032	. . NUT	1	J
	AN960D10	. . WASHER	4	J
		———*———		
	NAS43DD-3-54	. SPACER	6	J
	22S2095-1	BRACKET INSTALLATION, Cargo release sta 359.975	1	J
	AN392-17	. PIN, Flat hd	2	J
	AN392-25	. PIN, Flat hd	2	J
	AN381-2-6	. PIN, Cotter	4	J

Figure and Index Number	Part Number	Description 1 2 3 4 5 6 7	Units per Assembly	Usable On Code
20-	AN960D4	. WASHER	4	J
-40	AN210-1B	. PULLEY	1	J
-41	AN220-1	. PULLEY	1	J
		Attaching Parts		
	AN525-10R16	. SCREW	1	J
	AN5-11A	. BOLT	1	J
	AN365-1032	. NUT	1	J
	AN365-524	. NUT	1	J
	AN960D10	. WASHER	4	J
	AN960D516	. WASHER	2	J
		———*———		
	22S2032-1	SUPPORT INSTALLATION, Lower pulley sta 359.975	1	J
-42	22S2056-1	. SUPPORT ASSEMBLY, Flight controls pulley	1	J
		Attaching Parts		
-43	AN4-7A	. BOLT	2	J
-44	AN3-7A	. BOLT	1	J
-45	AN3-6A	. BOLT	1	J
	AN365-428	. NUT	2	J
	AN365-1032	. NUT	2	J
	AN960D416	. WASHER	2	J
	AN960D10	. WASHER	3	J
	AN960D416L	. WASHER	2	J
	AN960D10L	. WASHER	1	J
		———*———		
-46	22S2060-2	. . GUARD, Cable	2	
		Attaching Parts		
-47	AN392-27	. . PIN, Flat hd	1	
	AN381-2-5	. . PIN, Cotter	1	
		———*———		
-48	AN210-5B	. . PULLEY	6	
		Attaching Parts		
-49	22S2059-1	. . BOLT	1	
	AN365-428	. . NUT	1	
	AN960D416	. . WASHER	1	
	AN960D616	. . WASHER	1	
		———*———		
-50	22C1753-47	. . SPACER	3	
-51	22S2055-1	. . SUPPORT, Flight controls pulley	1	J
-52	22S2058-1	. SUPPORT ASSEMBLY, Engine controls pulley	1	J
		Attaching Parts		
-53	AN3-7A	. BOLT	4	
	AN365-1032	. NUT	4	
	AN960D10	. WASHER	8	
		———*———		
-54	22S2060-1	. . GUARD, Cable	2	
		Attaching Parts		
-55	AN392-27	. . PIN, Flat hd	1	
	AN381-2-6	. . PIN, Cotter	1	
		———*———		
-56	AN210-2B	. . PULLEY	6	
		Attaching Parts		
-57	AN3-64	. . BOLT	1	
	AN381-2-8	. . PIN, Cotter	1	
	AN310-3	. . NUT	1	
	AN960D10L	. . WASHER	2	
		———*———		
-58	22C1753-44	. . SPACER	3	
-59	22S2057-1	. . SUPPORT, Engine controls pulley	1	J
-60	22S2028-1	SUPPORT INSTALLATION, Upper pulley sta 359.975	1	J
-61	NAS427W96	. PIN, Cable guard	1	
	AN381-2-6	. PIN, Cotter	2	
	AN960D10L	. WASHER	2	

Figure and Index Number	Part Number	Description 1 2 3 4 5 6 7	Units per Assembly	Usable On Code
20-62	22C1753-22	. SPACER	1	
		Attaching Parts		
-63	AN3-66A	. BOLT	1	J
	AN365-1032	. NUT	1	
	AN960D10	. WASHER	2	
		———*———		
-64	AN210-5B	. PULLEY	6	
		Attaching Parts		
-65	AN6-64A	. BOLT	1	
	AN365-624	. NUT	1	
	AN960D616	. WASHER	1	
	AN960D616L	. WASHER	1	
		———*———		
-66	22C1753-20	. SPACER	5	
-67	22C1753-23	. SPACER	2	
		Attaching Parts		
-68	AN3-60A	. BOLT	1	
	AN365-1032	. NUT	1	
	AN960D10	. WASHER	2	
		———*———		
-69	AN210-2B	. PULLEY	6	
		Attaching Parts		
-70	AN3-60A	. BOLT	1	
	AN365-1032	. NUT	1	
	AN960D10	. WASHER	2	
		———*———		
-71	22C1753-21	. SPACER	3	
	22S2076-1	BRACKET INSTL, Engine controls pulley sta 478.75	1	J
	AN392-57	. PIN, Flat hd	1	
	AN381-2-8	. PIN, Cotter	1	
	AN960D6	. WASHER	1	
-72	AN210-1B	. PULLEY	2	
		Attaching Parts		
	AN23-34A	. BOLT	1	
	AN364-1032	. NUT	1	
	AN960D10	. WASHER	3	
	AN960D10L	. WASHER	1	
		———*———		
	22C1753-75	. SPACER	1	
	22S2040-1	BRACKETS INSTALLATION, Pulley sta 549.200	1	J,BZ
	22S2040-2	. BRACKETS ASSEMBLY, Pulley	1	J,BZ
	AN392-25	. . PIN, Flat hd	4	
	AN381-2-5	. . PIN, Cotter	4	
	AN960D6L	. . WASHER	8	
-73	AN210-3B	. . PULLEY	4	J,BZ
		Attaching Parts		
	AN24-17A	. . BOLT	3	J
	AN24-25A	. . BOLT	1	
	AN364-428	. . NUT	4	J
	AN960D416	. . WASHER	12	J,BZ
	AN960D416L	. . WASHER	4	BO,BK
		———*———		
	22S2041-1	BRACKETS INSTL, Flight controls pulley sta 577	1	J
	AN392-51	. PIN, Flat hd	1	
	AN392-47	. PIN, Flat hd	2	
	AN392-23	. PIN, Flat hd	2	
	AN381-2-6	. PIN, Cotter	5	
	AN960D4	. WASHER	5	
-74	AN210-4B	. PULLEY	3	
		Attaching Parts		
	AN24-18A	. BOLT	1	
	AN24-28A	. BOLT	1	

Figure and Index Number	Part Number	1 2 3 4 5 6 7 Description	Units per Assembly	Usable On Code
20-	AN24-17A	. BOLT	1	
	AN364-428	. NUT	3	
	AN960D416	. WASHER	10	
		*_____		
	22C1753-37	. SPACER	1	
	22C1753-38	. SPACER	1	

Figure and Index Number	Part Number	Description 1 2 3 4 5 6 7	Units per Assembly	Usable On Code
21-	22S2048-10	BRACKET INSTALLATION, Carb and mixture pulley sta 67	1	AV
	42S2048-1	BRACKET INSTALLATION, Carb and mixture pulley sta 67	1	I
	AN392-19	. PIN, Flat hd	8	
	AN381-2-8	. PIN, Cotter	8	
	AN960D6	. WASHER	8	
-1	AN210-2B	. PULLEY	4	
		Attaching Parts		
	AN3-10A	. BOLT	1	
	AN365-1032	. NUT	1	
	AN960D10	. WASHER	4	
	42E1201-1	. WASHER	4	
		———*———		
	42S2096-1	BRACKET INSTALLATION, Cargo release pulley sta 91.880	1	AU
	AN392-19	. PIN, Flat hd	1	AU
	AN392-21	. PIN, Flat hd	1	AU
	AN381-2-6	. Pin, Cotter	2	
	AN960D4	. WASHER	2	
-2	AN210-1B	. PULLEY	1	
		Attaching Parts		
	AN525-10R16	. SCREW	1	AU
	AN365-1032	. NUT	1	
	AN960D10	. WASHER	4	
		———*———		
	42S2018-1	BRACKETS INSTALLATION, Pulley sta 91.880	1	AV
	42S2370-1	BRACKETS INSTALLATION, Pulley sta 91.880	1	I
	22S2018-2	BRACKETS INSTALLATION, Pulley sta 91.880	1	J,AV
	42S2370-2	BRACKETS INSTALLATION, Pulley sta 91.880	1	I
	AN392-27	. PIN, Flat hd	2	I
	AN392-31	. PIN, Flat hd	2	
	AN381-2-8	. PIN, Cotter	4	
	AN960D6	. WASHER	4	
-3	AN210-4B	. PULLEY	1	
	AN210-5B	. PULLEY	1	
		Attaching Parts		
	AN24-18A	. BOLT	1	
	AN26-22A	. BOLT	1	
	AN364-428	. NUT	1	
	AN364-624	. NUT	1	
	AN960D416	. WASHER	4	
	AN960D616	. WASHER	4	
		———*———		
	22S2098-1	BRACKET INSTALLATION, Collective pitch idler pulley	1	J,AV
	AN392-25	. PIN, Flat hd	1	J,AV
	AN381-2-6	. PIN, Cotter	1	J,AV
	AN960D4L	. WASHER	1	J,AV
-4	AN210-3B	. PULLEY	1	J,AV
		Attaching Parts		
	AN24-18	. BOLT	1	J,AV
	AN381-2-12	. PIN, Cotter	1	J,AV
	AN320-4	. NUT	1	J,AV
	AN960D416	. WASHER	3	J,AV
	AN960D416L	. WASHER	1	J,AV
		———*———		
	22S2014-1	BRACKETS INSTL, Upper pulley sta 96, see fig. 20	Ref	J,AV
-5	42S2369-1	BRACKETS INSTL, Upper pulley sta 96, see fig. 22	Ref	I
	22S2068-1	BRACKETS INSTL, Lower pulley sta 97.360, see fig. 20	Ref	J,AV
-6	42S2357-1	BRACKETS INSTL, Lower pulley sta 97.360, see fig. 22	Ref	I
	22S2013-1	SUPPORT INSTL, Lower pulley sta 104, see fig. 20	Ref	J,AV
	42S2013-1	SUPPORT INSTL, Lower inbd pulley sta 104	1	I
	AN392-17	. PIN, Flat hd	2	
	AN392-23	. PIN, Flat hd	2	I

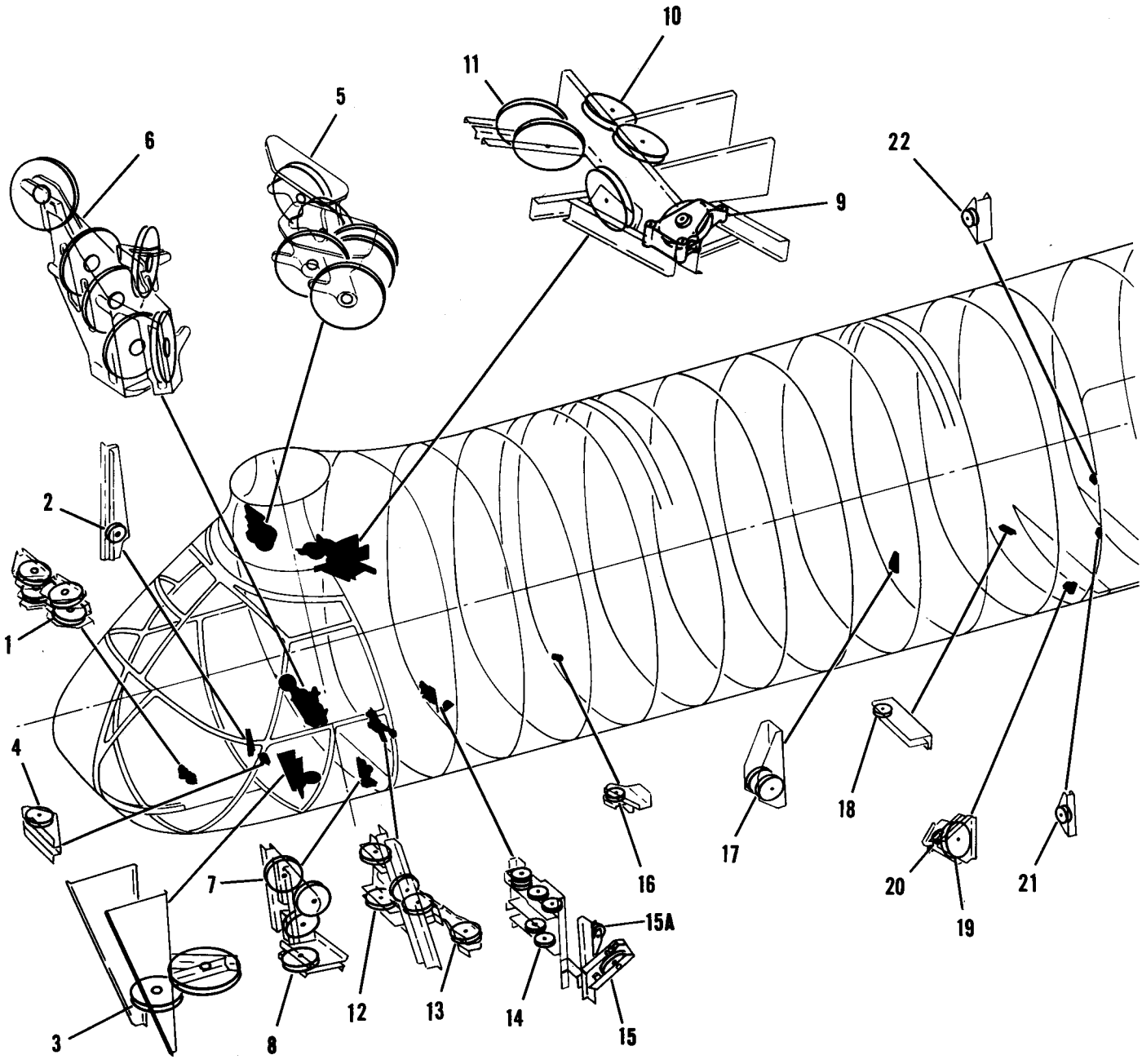

Figure 21. Pulley Brackets and Pulley Instl, H-21B and H-21C (Sheet 1 of 2)

Structure

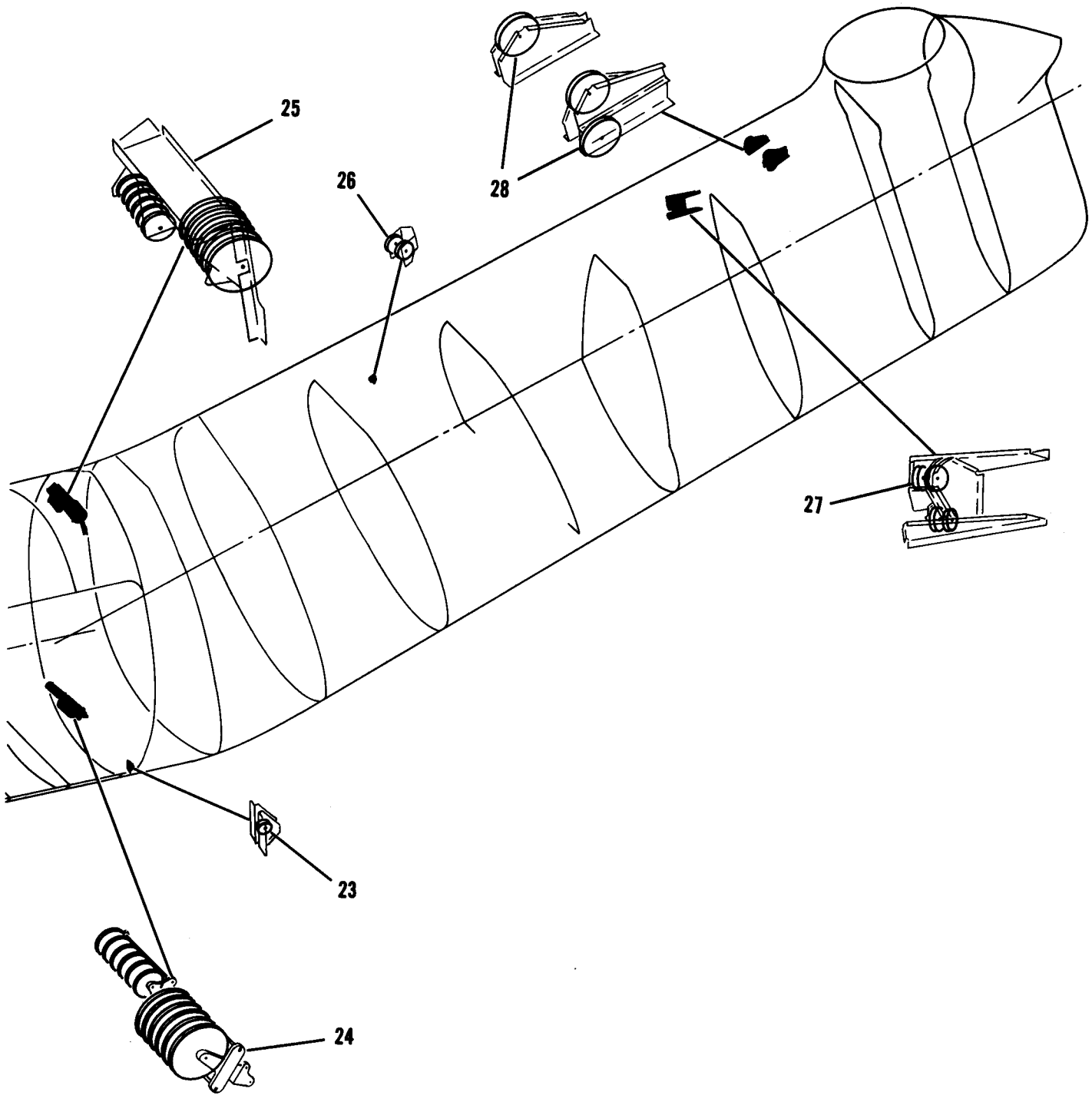

Figure 21. Pulley Brackets and Pulley Instl, H-21B and H-21C (Sheet 2 of 2)

Figure and Index Number	Part Number	Description 1 2 3 4 5 6 7	Units per Assembly	Usable On Code
21-	AN381-2-6	. PIN, Cotter	4	I
	AN960D6L	. WASHER	4	I
-7	AN210-2B	. PULLEY	2	
-8	AN210-3B	. PULLEY	2	I
		Attaching Parts		
	AN23-15A	. BOLT	1	I
	AN23-14A	. BOLT	1	I
	AN24-16A	. BOLT	1	I
	AN24-17A	. BOLT	1	I
	AN364-1032	. NUT	2	
	AN364-428	. NUT	2	I
	AN960D10	. WASHER	6	
	AN960D416	. WASHER	6	I
	AN960D10L	. WASHER	2	
	AN960D416L	. WASHER	2	I
		———*———		
	22S2016-1	BRACKETS INSTL, Upper pulley sta 111, see fig. 20	Ref	J,AV
	42S2362-1	BRACKETS INSTL, Flight controls pulley sta 111	1	I
-9	42S2359-1	. BRACKET ASSEMBLY, Flight controls pulley	1	I
		Attaching Parts		
	AN4-11A	. BOLT	1	I
	AN4-21A	. BOLT	2	I
	AN365-428	. NUT	3	I
	AN960D416	. WASHER	7	I
	AN960D416L	. WASHER (Between bracket and channel)	2	I
		———*———		
	AN392-43	. . PIN, Flat hd	2	I
	AN381-1-8	. . PIN, Cotter	2	I
	AN960D6	. . WASHER	2	I
	AN210-4B	. . PULLEY	1	
		Attaching Parts		
	AN4-20A	. . BOLT	1	
	AN365-428	. . NUT	1	
	AN960D416	. . WASHER	2	
		———*———		
	NAS77-4-38	. . BUSHING	1	I
	NAS75-4-017	. . BUSHING	1	I
	AN392-25	. PIN, Flat hd	1	
	AN392-31	. PIN, Flat hd	3	I
	AN392-29	. PIN, Flat hd	3	I
	AN392-29	. PIN, Flat hd	1	HH
	AN392-27	. PIN, Flat hd	1	AW,HG
	AN381-2-6	. PIN, Cotter	8	I
	AN960D4	. WASHER	8	I
-10	AN210-4B	. PULLEY	2	
-11	AN210-5B	. PULLEY	3	
		Attaching Parts		
	AN24-17A	. BOLT	1	I
	AN24-19A	. BOLT	1	AW,HG
	AN24-20A	. BOLT	1	HH
	AN26-18A	. BOLT	2	I
	AN26-20A	. BOLT	1	
	AN364-428	. NUT	2	I
	AN364-624	. NUT	3	
	AN960D416	. WASHER	6	I
	AN960D616	. WASHER	6	I
	AN960D416	. WASHER	4	HH
	AN960D416L	. WASHER	2	HH
		———*———		
	22S2019-1	BRACKETS INSTL, Flight controls pulley sta 119.500, see fig. 20	Ref	J,AV
	42S2019-1	BRACKETS INSTL, Flight controls pulley sta 119.500	1	I

Figure and Index Number	Part Number	Description 1 2 3 4 5 6 7	Units per Assembly	Usable On Code
21-	AN392-25	. PIN, Flat hd	3	
	AN381-2-6	. PIN, Cotter	3	
	AN960D4L	. WASHER	3	
-12	AN210-3B	. PULLEY	3	
		Attaching Parts		
	AN24-18A	. BOLT	1	I
	AN365-428	. NUT	1	
	AN960D416	. WASHER	4	
		———*———		
	22S2077-1	BRACKETS INSTL, Aft collective pitch pulley LH sta 119.500, see fig. 20	Ref	J,AV
	42S2077-1	BRACKETS INSTL, Aft collective pitch pulley LH sta 119.500	1	I
	AN392-25	. PIN, Flat hd	2	I
	AN381-2-6	. PIN, Cotter	2	I
	AN960D4L	. WASHER	2	I
-13	AN210-3B	. PULLEY	2	I
		Attaching Parts		
	AN24-18A	. BOLT	1	
	AN365-428	. NUT	1	
	AN960D416	. WASHER	4	
		———*———		
	22S2023-20	BRACKETS INSTL, Flight controls pulley sta 159.500	1	AP
	22S2023-26	BRACKETS INSTL, Flight controls pulley sta 159.500, see fig. 20	Ref	BN,BU
	42S2023-1	BRACKETS INSTL, Flight controls pulley sta 159.500	1	HF
	42S2023-24	BRACKETS INSTL, Flight controls pulley sta 159.500	1	DQ
	or			
	42S2023-25	BRACKETS INSTL, Flight controls pulley sta 159.500	1	DQ
	AN392-37	. PIN, Flat hd	4	BN,BV
	AN392-45	. PIN, Flat hd	1	
	AN392-45	. PIN, Flat hd (used with 42S2023-25)	4	DQ
	AN392-19	. PIN, Flat hd	1	
	AN392-41	. PIN, Flat hd	1	DQ
	AN381-2-6	. PIN, Cotter	6	J,DP
	AN381-2-6	. PIN, Cotter	7	DQ
	AN960PD4L	. WASHER	6	J,DP
	AN960PD4L	. WASHER	7	DQ
-14	AN210-1B	. PULLEY	6	
		Attaching Parts		
	AN23-22A	. BOLT	1	J,AV
	AN23-24A	. BOLT	2	J,AV
	AN23-24A	. BOLT	3	I
	AN23-27A	. BOLT	2	
	AN23-27A	. BOLT (Used with 42S2023-25)	5	DQ
	AN364-1032	. NUT	5	
	AN960D10	. WASHER	7	J,AV
	AN960PD10	. WASHER	6	I
	AN960PD10	. WASHER (Used with 42S2023-25)	7	DQ
	AN960PD10L	. WASHER	7	
		———*———		
	22C1753-18	. SPACER	1	
	NAS43-3-21	. SPACER (Used with 42S2023-25)	1	DQ
	NAS43-3-11	. SPACER (Used with 42S2023-25)	2	DQ
	22C1753-17	. SPACER	4	
	22C1753-19	. SPACER	2	
	NAS43-3-27	. SPACER (Used with 42S2023-25)	2	DQ
	NAS43-3-37	. SPACER (Used with 42S2023-25)	2	DQ
	NAS43-3-28	. SPACER (Used with 42S2023-25)	2	DQ
	22C1753-16	. SPACER	1	
	NAS43-3-59	. SPACER (Used with 42S2023-25)	1	DQ
-15	AN210-3B	. PULLEY	1	

Figure and Index Number	Part Number	1 2 3 4 5 6 7 Description	Units per Assembly	Usable On Code
21-		*Attaching Parts*		
	AN24-48A	. BOLT	1	BN,BV
	AN364-428	. NUT	1	
	AN960PD416	. WASHER	3	BN,BV
	AN960PD416L	. WASHER	1	BN,BV
		———*———		
	NAS43DD4-21	. SPACER	1	BN,BV
	22C1753-70	. SPACER	1	BN,BV
-15A	AN220-1	. PULLEY	1	DQ
		Attaching Parts		
	AN5-16A	. BOLT	1	DQ
	AN364-524	. NUT	1	DQ
	AN960D516	. WASHER	2	DQ
		———*———		
	NAS75-5-008	. BUSHING	2	DQ
	42S2023-26	. BRACKET ASSEMBLY, Pulley (used with 42S2023-25)	1	DQ
	42S2023-27	. BRACKET ASSEMBLY, Pulley (used with 42S2023-25)	1	DQ
	42S2014-1	SUPPORT INSTALLATION, Pulley sta 179.500	1	AU
	AN392-19	. PIN, Flat hd	1	AU
	AN381-2-6	. PIN, Cotter	1	AU
	AN960D4	. WASHER	1	AU
-16	AN210-1B	. PULLEY	1	AU
		Attaching Parts		
	AN23-15A	. BOLT	1	AU
	AN364-1032	. NUT	1	AU
	AN960D10	. WASHER	3	AU
	AN960D10L	. WASHER	3	AU
		———*———		
	42S2068-1	BRACKET INSTL, Flight controls pulley sta 299.500	1	AV
	42S2394-1	BRACKET INSTL, Flight controls pulley sta 299.500	1	I
	AN393-65	. PIN, Flat hd	1	AU
	AN381-2-8	. PIN, Cotter	1	AU
	AN960D10	. WASHER	2	AU
-17	AN210-3B	. PULLEY	2	AU
		Attaching Parts		
	AN4-23	. BOLT	1	AU
	AN381-2-12	. PIN, Cotter	1	AU
	AN310-4	. NUT	1	AU
	AN960D416	. WASHER	4	AU
		———*———		
	NAS43DD4-42	. SPACER	1	AU
	42S2094-1	BRACKET INSTL, Center cargo release pulley sta 311.810	1	AU
	AN392-21	. PIN, Flat hd	2	AU
	AN381-2-6	. PIN, Cotter	2	AU
	AN960D4	. WASHER	2	AU
-18	AN210-1B	. PULLEY	1	AU
		Attaching Parts		
	AN23-18A	. BOLT	1	AU
	AN365-1032	. NUT	1	AU
	AN960D10	. WASHER	4	AU
		———*———		
	NAS75-3-005	. BUSHING	1	AU
	42S2094-2	BRACKET INSTL, Outbd cargo release pulley sta 311.810	1	AU
	AN392-17	. PIN, Flat hd	4	AU
	AN381-2-6	. PIN, Cotter	4	AU
	AN960D4	. WASHER	4	AU
-19	AN210-2B	. PULLEY	1	AU
-20	AN210-1B	. PULLEY	1	AU
		Attaching Parts		
	AN23-16A	. BOLT	1	AU
	AN365-1032	. NUT	1	AU
	AN960D10	. WASHER	4	AU
		———*———		

Figure and Index Number	Part Number	Description 1 2 3 4 5 6 7	Units per Assembly	Usable On Code
21-	42S2091-1	BRACKET INSTL, Center cargo release pulley sta 311.810	1	AU
	AN392-19	. PIN, Flat hd	1	
	AN381-2-8	. PIN, Cotter	1	
	AN960D4	. WASHER	1	
-21	AN210-1B	. PULLEY	1	
		Attaching Parts		
	AN525-10R16	. SCREW	1	
	AN365-1032	. NUT	1	
	AN960D10	. WASHER	4	
		———*———		
	42S2093-1	BRACKET INSTALLATION, Cargo release pulley sta 311.810	1	AU
	AN392-33	. PIN, Flat hd	1	
	AN381-2-8	. PIN, Cotter	1	
	AN960D4	. WASHER	1	
-22	AN210-1B	. PULLEY	1	
		Attaching Parts		
	AN525-10R24	. SCREW	1	
	AN365-1032	. NUT	1	
	AN960D10	. WASHER	3	
		———*———		
	NAS43DD-3-20	. SPACER	2	
	42S2311-1	BRACKET INSTL, Cargo release pulley sta 359.800	1	BW
	42S2309-1	BRACKET INSTL, Cargo release pulley sta 359.800	1	BX,D
	AN392-13	. PIN, Flat hd	2	BW
	AN392-25	. PIN, Flat hd	2	BX,D
	AN381-2-8	. PIN, Cotter	2	
	AN960D4	. WASHER	2	BW
	AN960D6	. WASHER	2	BX,D
-23	AN210-1B	. PULLEY	1	BW
	AN220-3	. PULLEY	1	BX,D
		Attaching Parts		
	AN23-12A	. BOLT	1	BW
	AN5-13A	. BOLT	1	BX,D
	AN364-1032	. NUT	1	BW
	AN364-524	. NUT	1	BX,D
	AN960D10	. WASHER	2	BW
	AN960D516	. WASHER	1	BX,D
	AN960D516L	. WASHER	1	BX,D
		———*———		
-24	42S2032-1	SUPPORT INSTL, Lower pulley sta 359.800, see fig. 22	Ref	AV
	42S2032-2	SUPPORT INSTL, Lower pulley sta 359.800, see fig. 22	Ref	I
-25	42S2028-1	SUPPORT INSTL, Upper pulley sta 359.800, see fig. 22	Ref	AV
	42S2373-1	SUPPORT INSTL, Upper pulley sta 359.800, see fig. 22	Ref	I
	42S2076-1	BRACKET INSTL, Engine controls pulley sta 478.750	1	AV
	42S2387-1	BRACKET INSTL, Engine controls pulley sta 478.750	1	I
	AN392-57	. PIN, Flat hd	1	
	AN381-2-8	. PIN, Cotter	1	
	AN960D6	. WASHER	1	
-26	AN210-1B	. PULLEY	2	
		Attaching Parts		
	AN23-34A	. BOLT	1	
	AN364-1032	. NUT	1	
	AN960D10	. WASHER	3	
	AN960D10L	. WASHER	1	
		———*———		
	22C1753-75	SPACER	1	
	22S2040-1	BRACKETS INSTALLATION, Pulley sta 549.200, see fig. 20	Ref	J,BZ
	22S2040-27	BRACKETS INSTALLATION, Pulley sta 549.200	1	AO,CA
	42S2374-1	BRACKETS INSTALLATION, Pulley sta 549.200	1	HM
	42S2374-25	BRACKETS INSTALLATION, Pulley sta 549.200	1	HN
	42S2374-29	BRACKETS INSTALLATION, Pulley sta 549.200	1	EG,EH

Figure and Index Number	Part Number	1 2 3 4 5 6 7 Description	Units per Assembly	Usable On Code
21-	22S2040-2	. BRACKETS ASSEMBLY, Pulley, see fig. 20	Ref	J,BZ
	22S2040-28	. BRACKETS ASSEMBLY, Pulley	1	AO,CA
	42S2374-2	. BRACKETS ASSEMBLY, Pulley	1	HM
	42S2374-26	. BRACKETS ASSEMBLY, Pulley	1	HN
	42S2374-30	. BRACKETS ASSEMBLY, Pulley	1	EG,EH
	AN392-25	. . PIN, Flat hd	4	
	AN381-2-5	. . PIN, Cotter	4	
	AN960D6L	. . WASHER	8	
	22S2040-30	. . GUIDE	1	HO
-27	AN210-3B	. . PULLEY	4	J,BZ
	AN210-3B	. . PULLEY	3	CD,D
	AN220-1	. . PULLEY	1	CD,D
		Attaching Parts		
	AN24-17A	. . BOLT	3	AV,HM
	AN24-17A	. . BOLT	2	DU,HN
	AN25-17A	. . BOLT	1	DU,HN
	AN24-25A	. . BOLT	1	
	AN364-428	. . NUT	4	AV,HM
	AN364-428	. . NUT	3	DU,HN
	AN364-524	. . NUT	1	DU,HN
	AN960D416	. . WASHER	12	J,BZ
	AN960D416	. . WASHER	10	HO
	AN960D416	. . WASHER	9	DU,HN
	AN960D516	. . WASHER	1	DU,HN
	AN960D416L	. . WASHER	4	AV,HM
	AN960D416L	. . WASHER	3	DU,HN
	AN960D516L	. . WASHER	1	DU,HN
		———*———		
	22S2040-29	. . BUSHING	1	HO
	NAS43DD-4-34	. . SPACER	1	
	42S2041-1	BRACKETS INSTL, Flight controls pulley sta 577	1	AV
	42S2372-1	BRACKETS INSTL, Flight controls pulley sta 577	1	I
	AN392-51	. PIN, Flat hd	1	
	AN392-47	. PIN, Flat hd	2	
	AN392-23	. PIN, Flat hd	2	
	AN381-2-6	. PIN, Cotter	5	
	AN960D4	. WASHER	5	
-28	AN210-4B	. PULLEY	3	
		Attaching Parts		
	AN24-18A	. BOLT	1	
	AN24-28A	. BOLT	1	
	AN24-17A	. BOLT	1	
	AN364-428	. NUT	3	
	AN960D416	. WASHER	10	
		———*———		
	22C1753-37	. SPACER	1	
	22C1753-38	. SPACER	1	

Structure

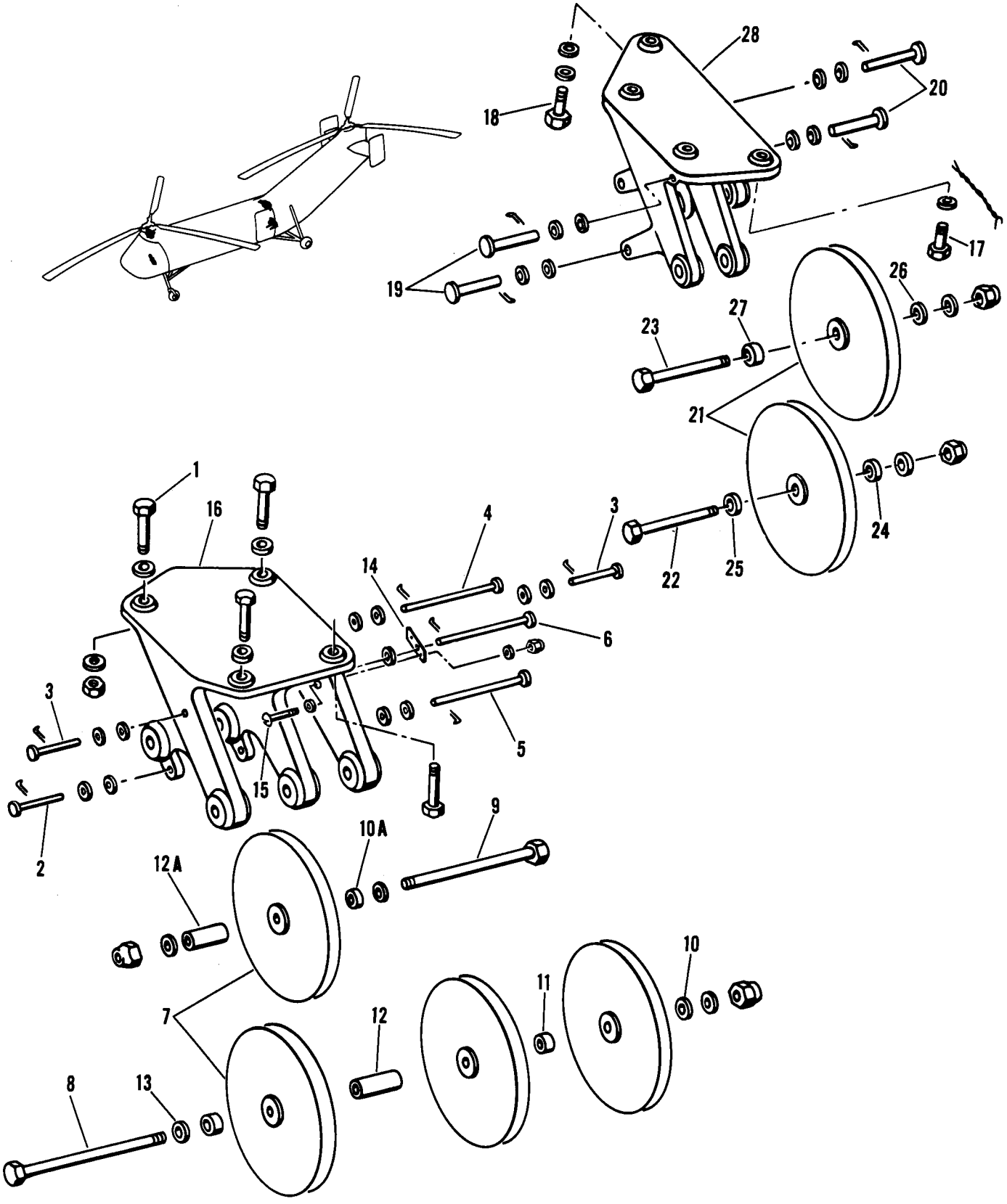

Figure 22. Pulley Bracket Assemblies and Pulleys, H-21B and H-21C (Sheet 1 of 3)

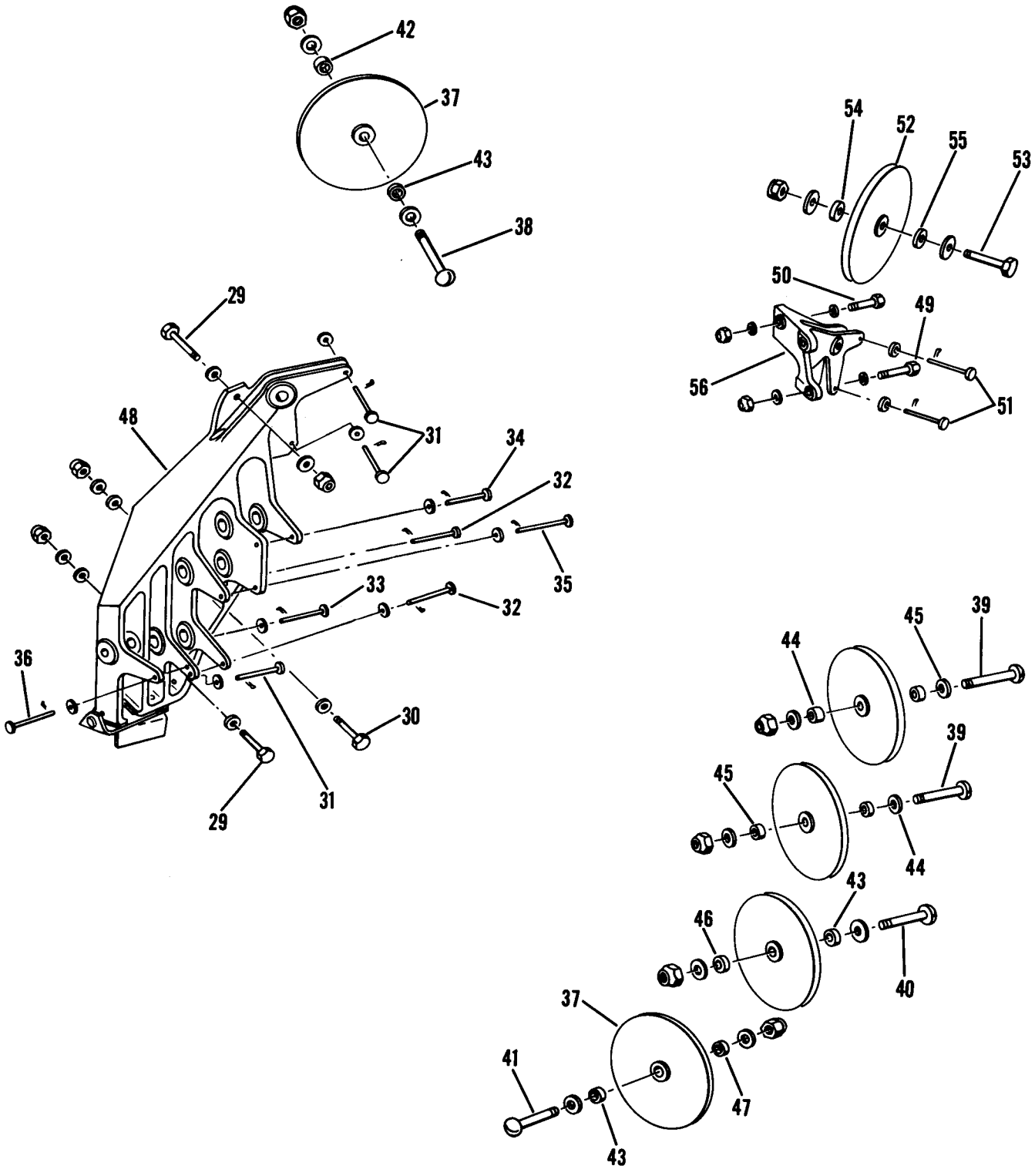

Figure 22. Pulley Bracket Assemblies and Pulleys, H-21B and H-21C (Sheet 2 of 3)

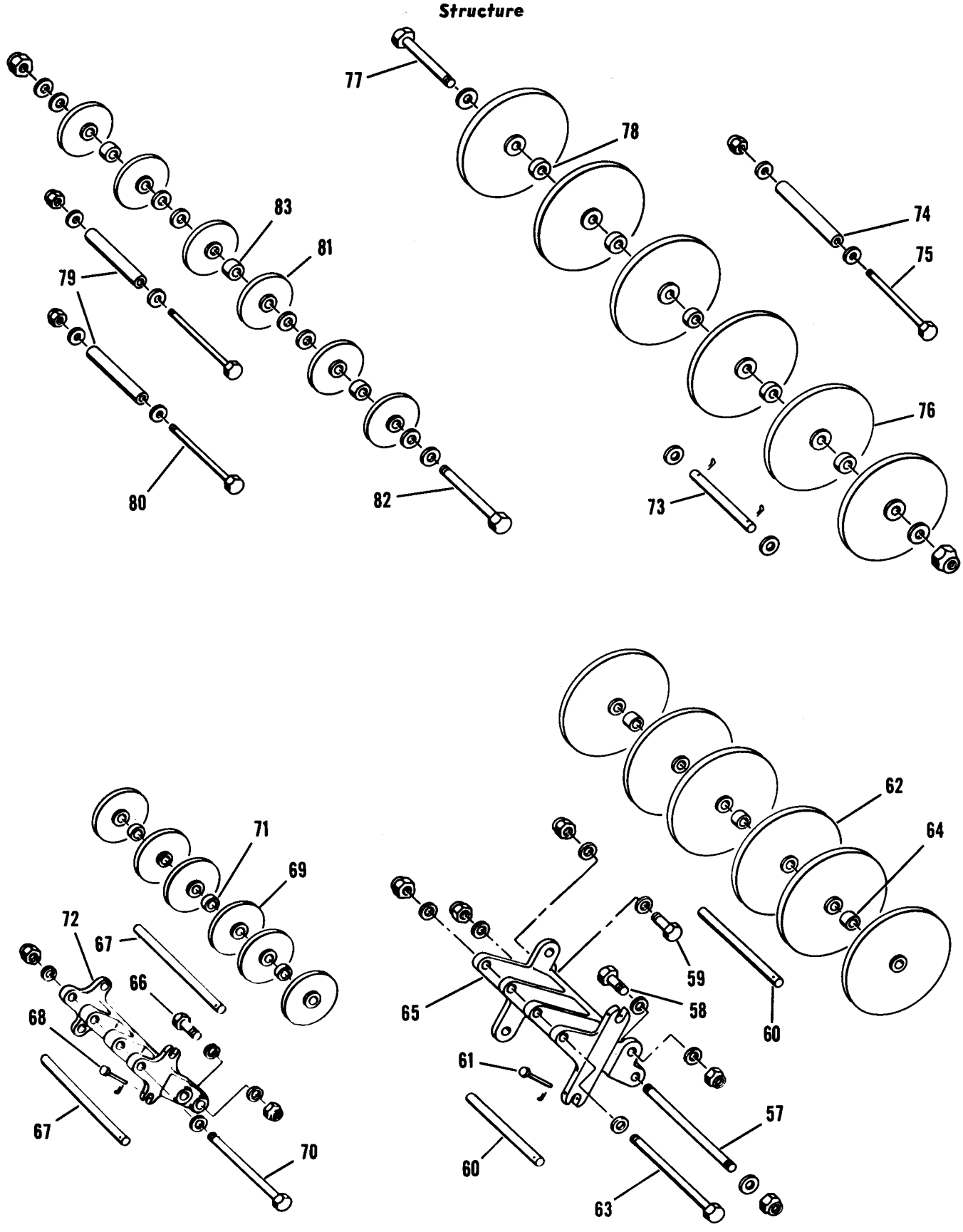

Figure 22. Pulley Bracket Assemblies and Pulleys, H-21B and H-21C (Sheet 3 of 3)

Figure and Index Number	Part Number	1 2 3 4 5 6 7 Description	Units per Assembly	Usable On Code
22-	42S2369-1	BRACKETS INSTL, Upper pulley sta 96	1	I
	42S2367-2	. BRACKET ASSEMBLY, Upper pulley	1	I
		Attaching Parts		
-1	AN4-12A	. BOLT	4	I
	AN365-428	. NUT	4	I
	AN960D416	. WASHER	8	I
		———*———		
-2	42S2388-1	. . PIN, Cable guard	1	I
-3	42S2388-2	. . PIN, Cable guard	2	I
-4	42S2388-3	. . PIN, Cable guard	1	I
-5	42S2388-5	. . PIN, Cable guard	1	I
-6	AN393-75	. . PIN, Flat hd	1	I
	AN381-2-5	. . PIN, Cotter	6	I
	AN960D10L	. . WASHER (One under hd and cotter pin)	11	I
-7	AN210-5B	. . PULLEY	4	I
		Attaching Parts		
-8	AN6-55A	. . BOLT	1	I
-9	AN6-35A	. . BOLT	1	I
	AN365-624	. . NUT	2	I
	AN960D616	. . WASHER	4	I
		———*———		
-10	NAS75-6-019	. . BUSHING	1	I
-10A	NAS75-6-41	. . BUSHING	1	I
-11	NAS75-6-011	. . BUSHING	1	I
-12	NAS75-6-123	. . BUSHING	2	I
-12A	NAS75-6-125	. . BUSHING	1	I
-13	NAS77-6-35	. . BUSHING	1	I
-14	42S2395-1	. . STRIP, Controls chafing	1	I
		Attaching Parts		
-15	NA515-6R10	. . SCREW	2	I
	AN365-632	. . NUT	2	I
	AN960D6L	. . WASHER	4	I
		———*———		
-16	42S2365-2	. . BRACKET, Upper pulley	1	I
	42S2368-1	. BRACKET ASSEMBLY, Upper pulley	1	I
		Attaching Parts		
-17	AN4H10A	. BOLT	2	I
-18	AN4H11A	. BOLT	2	I
	AN995C41	. WIRE, Lock	AR	I
	AN960D416	. WASHER	6	I
		———*———		
-19	AN393-53	. . PIN, Flat hd	2	I
-20	AN393-55	. . PIN, Flat hd	2	I
	AN381-2-5	. . PIN, Cotter	4	I
	AN960D10L	. . WASHER	8	I
-21	AN210-5B	. . PULLEY	2	I
		Attaching Parts		
-22	AN6-22A	. . BOLT	1	I
-23	AN26-34A	. . BOLT	1	I
	AN365-624	. . NUT	1	I
	AN364-624	. . NUT	1	I
	AN960D616	. . WASHER	2	I
		———*———		
-24	NAS77-6-35	. . BUSHING	1	I
-25	NAS75-6-022	. . BUSHING	1	I
-26	NAS77-6-41	. . BUSHING	1	I
-27	NAS75-6-023	. . BUSHING	1	I
-28	42S2366-1	. . BRACKET, Upper pulley	1	I
	42S2357-1	BRACKETS INSTL, Lower pulley sta 97.360	1	I
	42S2355-2	. BRACKET ASSEMBLY, Lower pulley	1	I
	or			
	42S2355-1	. BRACKET ASSEMBLY, Lower pulley	1	I

Figure and Index Number	Part Number	1 2 3 4 5 6 7 Description	Units per Assembly	Usable On Code
22-		*Attaching Parts*		
-29	AN4-13A	. BOLT	3	I
-30	AN4-12A	. BOLT	1	I
	AN365-428	. NUT	4	I
	AN960D416	. WASHER	10	I
		———*———		
-31	AN392-49	. . PIN, Flat hd	3	I
-32	AN392-55	. . PIN, Flat hd	2	I
-33	AN392-67	. . PIN, Flat hd	1	I
-34	AN392-59	. . PIN, Flat hd	1	I
-35	AN392-61	. . PIN, Flat hd	1	I
-36	AN393-53	. . PIN, Flat hd	1	I
	AN381-2-6	. . PIN, Cotter	9	I
	AN960D4	. . WASHER	7	I
-37	AN210-5B	. . PULLEY	5	I
		Attaching Parts		
-38	AN26-36A	. . BOLT	1	I
-39	AN26-38A	. . BOLT	2	I
-40	AN26-34A	. . BOLT	1	I
-41	AN26-32A	. . BOLT	1	I
	AN3-5A	. . BOLT	2	I
	AN364-624	. . NUT	5	I
	AN960D616	. . WASHER	7	I
	AN960D616L	. . WASHER	3	I
		———*———		
-42	NAS77-6-43	. . BUSHING	1	I
-43	NAS75-6-023	. . BUSHING	3	I
-44	NAS77-6-56	. . BUSHING	2	I
	NAS77-6-44	. . BUSHING	1	I
-45	NAS75-6-024	. . BUSHING	2	I
-46	NAS77-6-42	. . BUSHING	1	I
-47	NAS77-6-23	. . BUSHING	1	I
-48	42S2353-2	. . BRACKET ASSEMBLY, Pulley	1	I
	42S2353-9	. . . PIN, Guard	1	I
	AN381-2-10	. . . PIN, Cotter	1	I
	42S2353-10	. . . STRAP	1	I
		Attaching Parts		
	AN4-11A	. . . BOLT	2	I
	AN4-12A	. . . BOLT	2	I
	AN173-10A	. . . BOLT	1	I
	AN365-428	. . . NUT	4	I
	AN365-1032	. . . NUT	1	I
	AN960D416	. . . WASHER	4	I
	AN960D416L	. . . WASHER	4	I
	AN960D10L	. . . WASHER	2	I
		———*———		
	42S2353-4	. . . SPACER	1	I
	42S2353-5	. . . SPACER	1	I
	42S2353-8	. . . CLIP	1	I
	42S2353-1	. . . BRACKET, Pulley	1	I
	42S2354-1	. BRACKET ASSEMBLY, Collective pitch pulley	1	I
		Attaching Parts		
-49	AN4-11A	. BOLT	2	I
-50	AN4-12A	. BOLT	1	I
	AN365-428	. NUT	3	I
	AN960D416	. WASHER	5	I
	AN960D416L	. WASHER	1	I
		———*———		
-51	AN392-45	. . PIN, Flat hd	2	I
	AN381-2-6	. . PIN, Cotter	2	I
	AN960D4L	. . WASHER	2	I

Figure and Index Number	Part Number	1 2 3 4 5 6 7 Description	Units per Assembly	Usable On Code
22-52	AN210-5B	. . PULLEY	1	I
		Attaching Parts		
-53	AN6-22A	. . BOLT	1	I
	AN365-624	. . NUT	1	I
	AN960D616	. . WASHER	2	I
		———*———		
-54	NAS77-6-41	. . BUSHING	1	I
-55	NAS75-6-018	. . BUSHING	1	I
-56	42S2354-2	. . BRACKET, Collective pitch pulley	1	I
	42S2032-1	SUPPORT INSTALLATION, Lower pulley sta 359.800	1	AV
	42S2032-2	SUPPORT INSTALLATION, Lower pulley sta 359.800	1	I
	42S2056-1	. SUPPORT ASSEMBLY, Flight controls pulley sta 359.800	1	AU
		Attaching Parts		
-57	42S2299-1	. ROD, Pulley support	1	AU
-58	AN4-11A	. BOLT	1	AU
-59	AN4-10A	. BOLT	1	AU
	AN380-2-3	. PIN, Cotter	2	AU
	AN310-4	. NUT	2	AU
	AN365-428	. NUT	2	AU
	AN960D416	. WASHER	8	AU
	AN960D416L	. WASHER	1	AU
		———*———		
-60	22S2060-2	. . GUARD, Cable	2	
		Attaching Parts		
-61	AN392-27	. . PIN, Flat hd	2	
	AN381-2-5	. . PIN, Cotter	2	
		———*———		
-62	AN210-5B	. . PULLEY	6	
		Attaching Parts		
-63	22S2059-1	. . BOLT	1	
	AN365-428	. . NUT	1	
	AN960D416	. . WASHER	1	
	AN960D616	. . WASHER	1	
		———*———		
-64	22C1753-47	. . SPACER	3	
-65	42S2055-1	. . SUPPORT, Flight controls pulley	1	AU
	42S2058-1	. SUPPORT ASSEMBLY, Eng controls pulley sta 359.800	1	AU
		Attaching Parts		
-66	AN3-7A	. BOLT	4	
	AN365-1032	. NUT	4	
	AN960D10	. WASHER	4	AU
	AN960D10L	. WASHER	4	AU
		———*———		
-67	22S2060-1	. . GUARD, Cable	2	
		Attaching Parts		
-68	AN392-27	. . PIN, Flat hd	2	
	AN381-2-6	. . PIN, Cotter	2	
		———*———		
-69	AN210-2B	. . PULLEY	6	
		Attaching Parts		
-70	AN3-64	. . BOLT	1	
	AN381-2-8	. . PIN, Cotter	1	
	AN310-3	. . NUT	1	
	AN960D10L	. . WASHER	2	
		———*———		
-71	22C1753-44	. . SPACER	3	
-72	42S2057-1	. . SUPPORT, Engine controls pulley	1	AU
	42S2028-1	SUPPORT INSTALLATION, Upper pulley sta 359.800	1	AV
	42S2373-1	SUPPORT INSTALLATION, Upper pulley sta 359.800	1	I
-73	NAS427W99	. PIN, Cable guard	1	
	AN381-2-6	. PIN, Cotter	2	

Figure and Index Number	Part Number	1 2 3 4 5 6 7 Description	Units per Assembly	Usable On Code
22-	AN960D10L	. WASHER	2	
-74	NAS43-3-408	. SPACER	1	
		Attaching Parts		
-75	AN3-67A	. BOLT	1	AU
	AN365-1032	. NUT	1	
	AN960D10	. WASHER	2	
		———*———		
-76	AN210-5B	. PULLEY	6	
		Attaching Parts		
-77	AN6-64A	. BOLT	1	
	AN365-624	. NUT	1	
	AN960D616	. WASHER	1	
	AN960D616L	. WASHER	1	
		———*———		
-78	22C1753-20	. SPACER	5	
-79	22C1753-23	. SPACER	2	
		Attaching Parts		
-80	AN3-60A	. BOLT	1	
	AN365-1032	. NUT	1	
	AN960D10	. WASHER	2	
		———*———		
-81	AN210-2B	. PULLEY	6	
		Attaching Parts		
-82	AN3-60A	. BOLT	1	
	AN365-1032	. NUT	1	
	AN960D10	. WASHER	2	
		———*———		
-83	22C1753-21	. SPACER	3	

Alighting Gear

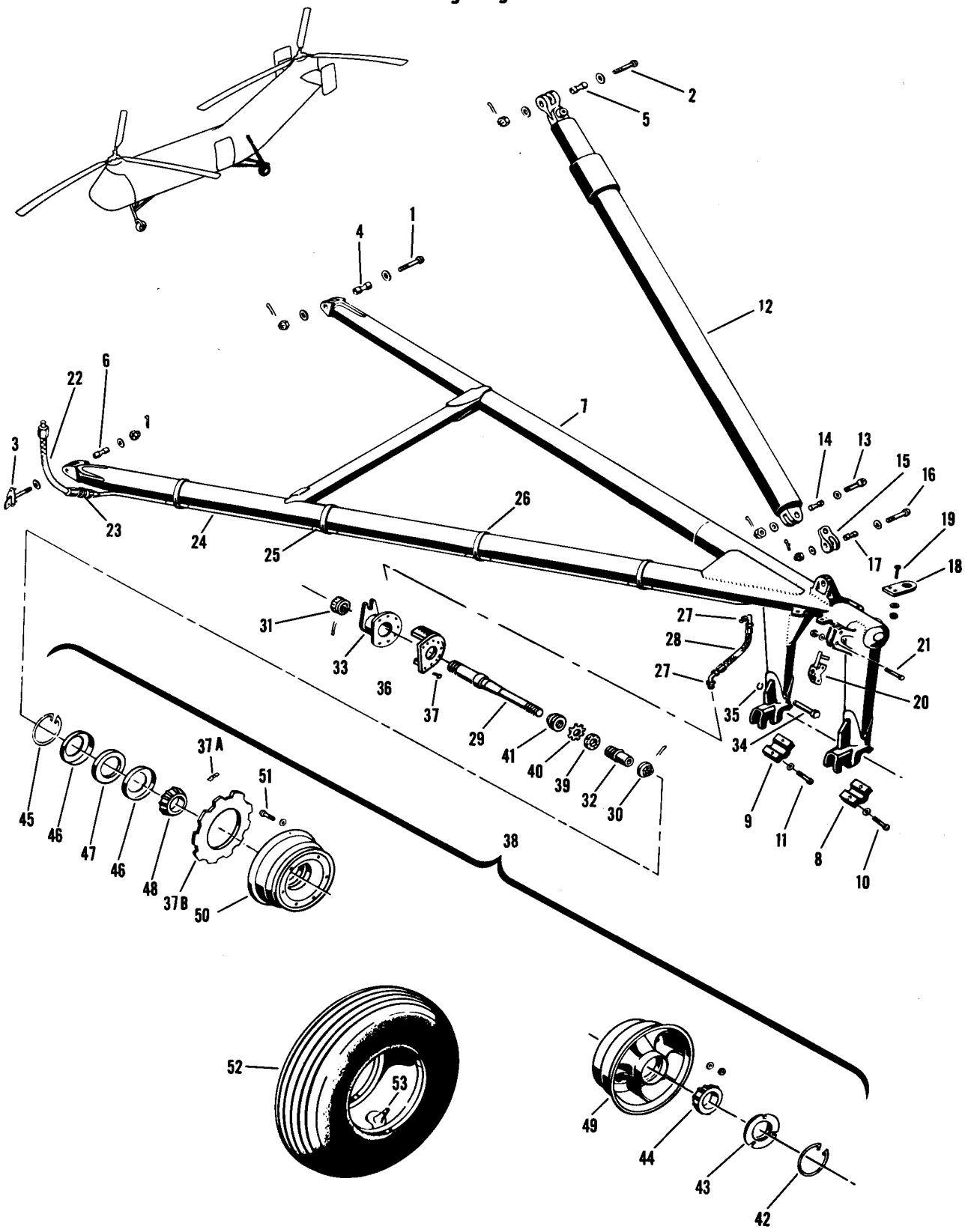

Figure 23. Main Alighting Gear, YH-21

Figure and Index Number	Part Number	Description 1 2 3 4 5 6 7	Units per Assembly	Usable On Code
28-	22L0001-2	GEAR INSTALLATION, Main alighting	1	A
	22L0002-1	. GEAR INSTALLATION, Main alighting LH	1	Q
	22L0002-5	. GEAR INSTALLATION, Main alighting LH	1	R
	22L0002-2	. GEAR INSTALLATION, Main alighting RH	1	Q
	22L0002-6	. GEAR INSTALLATION, Main alighting RH	1	R
	22L0002-3	. . GEAR ASSEMBLY, Main alighting LH	1	Q
	22L0002-7	. . GEAR ASSEMBLY, Main alighting LH	1	R
	22L0002-4	. . GEAR ASSEMBLY, Main alighting RH	1	Q
	22L0002-8	. . GEAR ASSEMBLY, Main alighting RH	1	R
		Attaching Parts		
-1	NAS148A-45	. . BOLT	1	Q
	NAS148A-50	. . BOLT	1	R
-2	NAS150A-49	. . BOLT	1	A
-3	22L1071-5	. . BOLT ASSEMBLY, Fwd alighting gear fitting LH	1	Q
	22L1071-6	. . BOLT ASSEMBLY, Fwd alighting gear fitting RH	1	Q
	NAS150A-54	. . BOLT	1	A
	AN381-3-18	. . PIN, Cotter	1	A
	AN381-4-22	. . PIN, Cotter	2	A
	AN310-8	. . NUT	1	A
	AN310-10	. . NUT	2	A
	AN960-816	. . WASHER	1	A
	AN960-1016	. . WASHER	2	A
-4	NAS72-8-102	. . BUSHING	1	A
-5	NAS72-10-102	. . BUSHING	1	A
-6	NAS72-10-107	. . BUSHING	1	A
	NAS143-8C	. . WASHER	1	A
	NAS143-10C	. . WASHER	2	A
		———*———		
-7	22L1003-1	. . . V-BRACE ASSEMBLY, Main alighting gear LH	1	Q
	22L1003-19	. . . V-BRACE ASSEMBLY, Main alighting gear LH	1	R
	22L1003-2	. . . V-BRACE ASSEMBLY, Main alighting gear RH	1	Q
	22L1003-20	. . . V-BRACE ASSEMBLY, Main alighting gear RH	1	R
-8	22L1003-10	. . . . CAP	1	A
-9	22L1003-11	. . . . CAP	1	A
		Attaching Parts		
-10	22L1070-1	. . . . BOLT (Outbd)	2	A
-11	22L1070-2	. . . . BOLT (Inbd)	2	A
	NAS143-9C	. . . . WASHER	2	A
		———*———		
-12	79-02	. . . STRUT, Oleo (CAOP)	1	A
		Attaching Parts		
-13	NAS150A-49	. . . BOLT	2	A
	AN381-4-22	. . . PIN, Cotter	2	A
	AN310-10	. . . NUT	2	A
	AN960-1016	. . . WASHER (Under nut)	2	A
-14	NAS72-10-102	. . . BUSHING	2	A
	NAS143-10C	. . . WASHER (Under head)	2	A
		———*———		
-15	22L1055-1	. . . UNIVERSAL ASSEMBLY, Oleo strut	2	A
		Attaching Parts		
-16	NAS150A-49	. . . BOLT	1	A
	AN381-4-22	. . . PIN, Cotter	1	A
	AN310-10	. . . NUT	1	A
	AN960-1016	. . . WASHER	1	A
-17	NAS72-10-102	. . . BUSHING	1	A
	NAS143-10C	. . . WASHER	1	A
		———*———		
	22L1055-2	. . . . FITTING	1	A
	NAS77-10-37	. . . . BUSHING	1	A
	NAS77-10-40	. . . . BUSHING	1	A
	NAS77-14-44	. . . . BUSHING	2	A
■	MS15001-1	. . . . FITTING, Lubricator	1	A

Figure and Index Number	Part Number	1 2 3 4 5 6 7 Description	Units per Assembly	Usable On Code
23-18	22L1063-1	. . . EYE, Towing	1	A
		Attaching Parts		
-19	AN4-13A	. . . BOLT	2	A
	AN365-428	. . . NUT	2	A
	AN960-416	. . . WASHER	2	A
		———*———		
-20	22L1058-1	. . . FITTING, Mechanical rigger disconnect	1	A
		Attaching Parts		
-21	AN4-17A	. . . BOLT	2	A
	AN365-428	. . . NUT	2	A
	AN960-416	. . . WASHER	2	A
		———*———		
	22L1058-2	. . . . PIN ASSEMBLY, Lock	1	A
	NAS51-25	. . . . RING, Retainer	1	A
	22L1058-5	. . . . BLOCK	1	A
	22L1004-1	. . . BRAKE LINE INSTALLATION, Hydraulic LH	1	A
	22L1004-2	. . . BRAKE LINE INSTALLATION, Hydraulic RH	1	A
-22	AN6271-4-11½	. . . . HOSE ASSEMBLY	1	A
-23	AN815-4D	. . . . UNION	1	A
-24	22L1004-3	. . . . TUBE ASSEMBLY, LH	1	A
	22L1004-4	. . . . TUBE ASSEMBLY, RH	1	A
-25	NAS485-4-5	. . . . . HOSE	5	A
-26	326-625-3.625-S	. . . . CLAMP (MAR)	4	A
	AN924-4D	. . . . NUT	1	A
-27	AN837-4D	. . . . ELBOW	2	A
-28	AN6271-4-9	. . . . HOSE ASSEMBLY	1	A
	AN6289D4	. . . . NUT	1	A
	AN6290-4	. . . . GASKET	1	A
	AN6291-4	. . . . RING	1	A
-29	22L1060-1	. . . AXLE	1	A
		Attaching Parts		
-30	22L1064-1	. . . NUT, Outer	1	A
-31	22L1064-2	. . . NUT, Inner	1	A
	AN381-4-22	. . . PIN, Cotter	1	A
	AN381-4-36	. . . PIN, Cotter	1	A
		———*———		
-32	22L1062-1	. . . COLLAR, Thrust	1	A
-33	22L1061-1	. . . ATTACHMENT ASSEMBLY, Brake	1	A
	22L1061-2	. . . ATTACHMENT ASSEMBLY, Brake	1	A
		Attaching Parts		
-34	22L1069-1	. . . PIN, Brake	1	A
-35	5107-62	. . . RING, Retaining (WKI)	1	A
		———*———		
-36	9520713	. . . BRAKE ASSEMBLY (GY) (GFAE)	1	A
		Attaching Parts		
-37	AN4-7A	. . . BOLT	8	A
	AN365-428	. . . NUT	8	A
	AN960-416	. . . WASHER	8	A
		———*———		
-37A	9510375	. . . . CLIP (GY) (GFAE)	5	A
-37B	511431-2	. . . . DISC (GY) (GFAE)	1	A
-38	9530791	. . . WHEEL ASSEMBLY (GY) (GFAE)	1	A
		Attaching Parts		
-39	22L1064-3	. . . NUT, Lock	1	A
-40	W-07	. . . WASHER, SAE standard lock	1	A
-41	22L1065-1	. . . NUT, Thrust	1	A
		———*———		
-42	511705-1	. . . . RING, Snap (GY) (GFAE)	1	A
-43	9520362*	. . . . RING SUBASSEMBLY, Bearing closure (GY)	1	A

*This item not supplied with the wheel assembly and must be ordered separately.

Figure and Index Number	Part Number	1 2 3 4 5 6 7 Description	Units per Assembly	Usable On Code
23-44	07100	. . . . BEARING (TI) (GFAE)	1	A
-45	510779-12	. . . . RING, Snap (GY) (GFAE)	1	A
-46	214595	. . . . RETAINER, Felt (GY) (GFAE)	2	A
-47	510525-6	. . . . FELT (GY) (GFAE)	1	A
-48	19150	. . . . BEARING (TI) (GFAE)	1	
-49	9520964	. . . . WHEEL SUBASSEMBLY (GY) (GFAE)	1	A
-50	9520963	. . . . WHEEL SUBASSEMBLY (GY) (GFAE)	1	A
		Attaching Parts		
-51	AN5-12A	. . . . BOLT	8	A
	AN365-428	. . . . NUT	8	A
	AN960-516	. . . . WASHER	16	A
		***		
-52	207946-4	. . . CASING, 24 x 7.7 10 ply type VII (GY) (GFAE)	1	
-53	611500	. . . TUBE, 24 x 7.7 type VII (GY) (GFAE)	1	

Alighting Gear

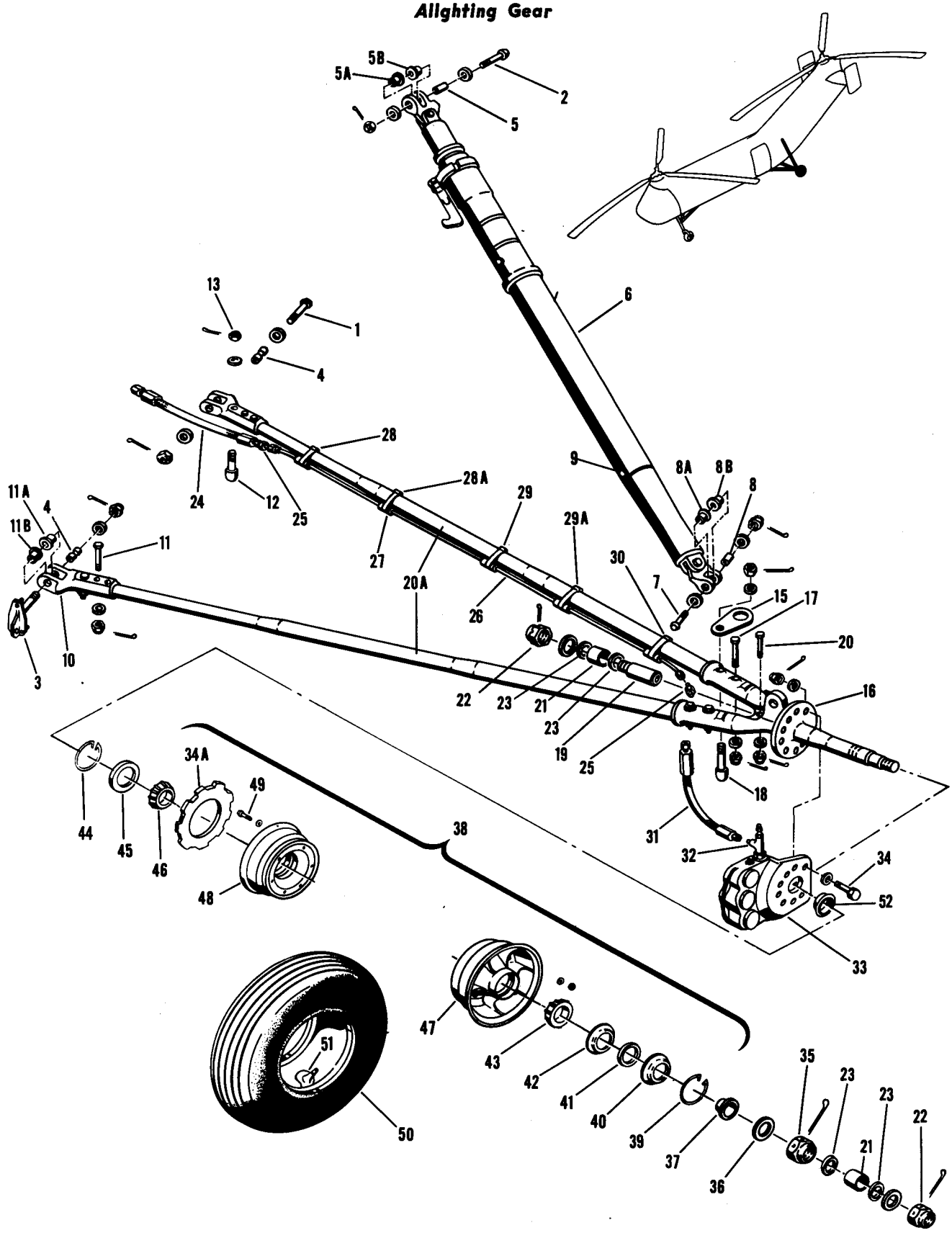

Figure 24. Main Alighting Gear (With Type A V-Brace), H-21A, H-21B and H-21C

Figure and Index Number	Part Number	Description 1 2 3 4 5 6 7	Units per Assembly	Usable On Code
24-	42L1001-3	GEAR INSTALLATION, Main alighting LH	1	E
	42L1001-1	GEAR INSTALLATION, Main alighting LH (with type A v-brace)	1	EM
	42L1001-4	GEAR INSTALLATION, Main alighting RH	1	E
	42L1001-2	GEAR INSTALLATION, Main alighting RH (with type A v-brace)	1	EM
	42L1002-3	. GEAR ASSEMBLY, Main alighting LH	1	E
	42L1002-1	. GEAR ASSEMBLY, Main alighting LH (with type A v-brace)	1	EM
	42L1002-4	. GEAR ASSEMBLY, Main alighting RH	1	E
	42L1002-2	. GEAR ASSEMBLY, Main alighting RH (with type A v-brace)	1	EM
		Attaching Parts		
-1	NAS150A-52	. BOLT	1	E,EM
-2	NAS150A-48	. BOLT	1	E,EM
-3	22L1071-1	. BOLT ASSEMBLY, Fwd alighting gear fitting LH	1	E
	22L1071-2	. BOLT ASSEMBLY, Fwd alighting gear fitting RH	1	E
	NAS150A-52	. BOLT (Replaces 22L1071-1 and -2)	1	EM
	AN381-4-22	. PIN, Cotter	2	B
	AN381-4-20	. PIN, Cotter	1	E,EM
	AN310-10	. NUT	3	B
	AN960-1016	. WASHER	3	B
-4	NAS72-10-107	. BUSHING	2	B
-5	NAS72-10-102	. BUSHING	1	B
-5A	NAS77-10-35	. BUSHING	1	E,EM
-5B	NAS77-10-40	. BUSHING	1	E,EM
	NAS143-10C	. WASHER	3	E,EM
		———*———		
-6	9217C-00	. . STRUT, Oleo (CP)	1	E,EM
	or			
	9217B-00	. . STRUT, Oleo (CP)	1	E,EM
	or			
	9217A-00	. . STRUT, Oleo (CP)	1	E,EM
		Attaching Parts		
-7	NAS150A-48	. . BOLT	1	E,EM
	AN381-4-20	. . PIN, Cotter	1	E,EM
	AN310-10	. . NUT	1	B
	AN960-1016	. . WASHER	1	B
-8	NAS72-10-102	. . BUSHING	1	B
-8A	NAS77-10-35	. . BUSHING	1	E
-8B	NAS77-10-40	. . BUSHING	1	
	NAS143-10C	. . WASHER	1	
		———*———		
-9	NAS451-17	. . . BUTTON, Plug	2	B
	42L1004-1	. . V-BRACE ASSEMBLY, Type A	1	E,EM
	or			
	42L1004-4	. . V-BRACE ASSEMBLY	1	E,EM
	or			
	42L1004-2	. . V-BRACE ASSEMBLY	1	E,EM
-10	42L1008-1	. . . FITTING ASSEMBLY, Inbd	2	E,EM
		Attaching Parts		
-11	AN176-23	. . . BOLT	2	B
	AN381-3-12	. . . PIN, Cotter	2	B
	AN310-6	. . . NUT	2	B
	AN960-616	. . . WASHER	2	B
		———*———		
-11A	42L1008-3	. . . . BUSHING, Inbd fitting assembly	1	B
-11B	42L1008-4	. . . . BUSHING, Inbd fitting assembly	1	B
-12	42L1016-1	. . . PAD, Inbd jack	1	B
		Attaching Parts		
-13	AN365-820	. . . NUT	1	B
	AN960-816	. . . WASHER	1	B
		———*———		
-14	Deleted			

Figure and Index Number	Part Number	1 2 3 4 5 6 7 Description	Units per Assembly	Usable On Code
24-15	42L1018-1	. . . LUG, Towing	1	B
-16	42L1007-3	. . . FITTING ASSEMBLY, Axle	1	E
■	42L1007-1	. . . FITTING ASSEMBLY, Axle	1	EM
		Attaching Parts		
-17	AN177-34	. . . BOLT	3	B
-18	42L1014-1	. . . PAD, Outbd jack	1	B
	AN381-3-12	. . . PIN, Cotter	4	B
	AN310-7	. . . NUT	4	B
	AN960-716	. . . WASHER	4	B
		———*———		
	NAS77-14-44	. . . . BUSHING	2	B
■	MS15002-3	. . . . FITTING, Lubricator	1	B
-19	22L3416-1	. . . . STUB, Axle	1	E
		Attaching Parts		
-20	AN175-23A	. . . . BOLT	1	B
	AN365-524	. . . . NUT	1	B
	AN960-516	. . . . WASHER	1	B
		———*———		
-20A	42L1010-2	. . TUBE, V-brace assembly	2	B
-21	42L2014-1	. . CAP, Axle	2	E
■	42L2014-1	. . CAP, Axle	1	EM
		Attaching Parts		
-22	AN320-12	. . NUT	1	B
	AN381-4-24	. . PIN, Cotter	1	B
	AN960-1216	. . WASHER	1	B
		———*———		
-23	PHS153-3-17-24DP	. . WASHER, Axle	4	E
■	PHS153-3-17 24DP	. . WASHER, Axle	2	EM
	42L1011-1	. . BRAKE LINE INSTALLATION, Hydraulic LH	1	B
	42L1011-2	. . BRAKE LINE INSTALLATION, Hydraulic RH	1	B
-24	MS28741-4-0112	. . . HOSE ASSEMBLY, Upper LH	1	B
	MS28741-4-0136	. . . HOSE ASSEMBLY, Upper RH	1	B
-25	AN815-4D	. . . UNION	2	B
-26	42L1011-4	. . . TUBE ASSEMBLY (Installed on aft tube of LH v-brace and fwd tube of RH v-brace)	1	B
-27	42L1011-9	. . . . HOSE	5	B
-28	321-63-187-S	. . . CLAMP (MAR)	1	B
-28A	321-63-200-S	. . . CLAMP (MAR)	1	B
-29	321-63-225-S	. . . CLAMP (MAR)	1	B
-29A	321-63-250-S	. . . CLAMP (MAR)	1	B
-30	321-63-275-S	. . . CLAMP (MAR)	1	B
-31	MS28741-4-0112	. . . HOSE ASSEMBLY, Lower	1	B
■ -32	AN784D4	. . . TEE	1	B
	AN6289D4	. . . NUT	1	B
	AN6291-4	. . . RING	1	B
	AN6290-4	. . . GASKET	1	B
-33	9530721	. . BRAKE ASSEMBLY (GY) (GFAE)	1	B
		Attaching Parts		
-34	AN5-11A	. . BOLT	8	B
	AN363-524	. . NUT	8	B
	AN960D516	. . WASHER	16	B
		———*———		
-34A	9530727	. . . DISC (GY) (GFAE)	1	B
	9510708	. . . BRAKE LINING (GY)	1	B
	42L1005-1	. . TIRE, TUBE AND WHEEL ASSEMBLY	1	B
		Attaching Parts		
-35	AN7502-23	. . NUT	1	B
	AN381-4-32	. . PIN, Cotter	1	B
-36	AN7503-23	. . WASHER	1	B
-37	42L1019-1	. . COLLAR, Outbd axle	1	B
		———*———		

Figure and Index Number	Part Number	1 2 3 4 5 6 7 Description	Units per Assembly	Usable On Code
24-38	531031M-1	. . . WHEEL ASSEMBLY (GY) (GFAE)	1	B
-39	9510847	. . . . RING, Snap (GY) (GFAE)	1	B
-40	9521634*	. . . . RING, Bearing outer closure (GY)	1	B
-41	9510663*	. . . . RING, Felt seal (GY)	1	B
-42	9521635*	. . . . RING, Bearing inner closure (GY)	1	B
-43	19150	. . . . BEARING (TI)	1	B
-44	510779-2	. . . . RING, Snap (GY)	1	B
-45	512104-4	. . . . RETAINER (GY)	1	B
-46	18200	. . . . BEARING (TI)	1	B
-47	512156-M	. . . . WHEEL SUBASSEMBLY (GY)	1	B
-48	512157-M	. . . . WHEEL SUBASSEMBLY (GY)	1	B
		Attaching Parts		
-49	AN6-15A	. . . . BOLT	8	B
	AN365-624	. . . . NUT	8	B
	AN960-616	. . . . WASHER	16	B
		***		
-50	207946-4	. . . CASING, 24 x 7.7 10 ply type VII (GY) (GFAE)	1	
-51	611500	. . . TUBE, 24 x 7.7 type VII (GY) (GFAE)	1	
-52	22L1015-1	. . COLLAR, Inbd axle	1	B

*These items not supplied with the wheel assembly and must be ordered separately.

Alighting Gear

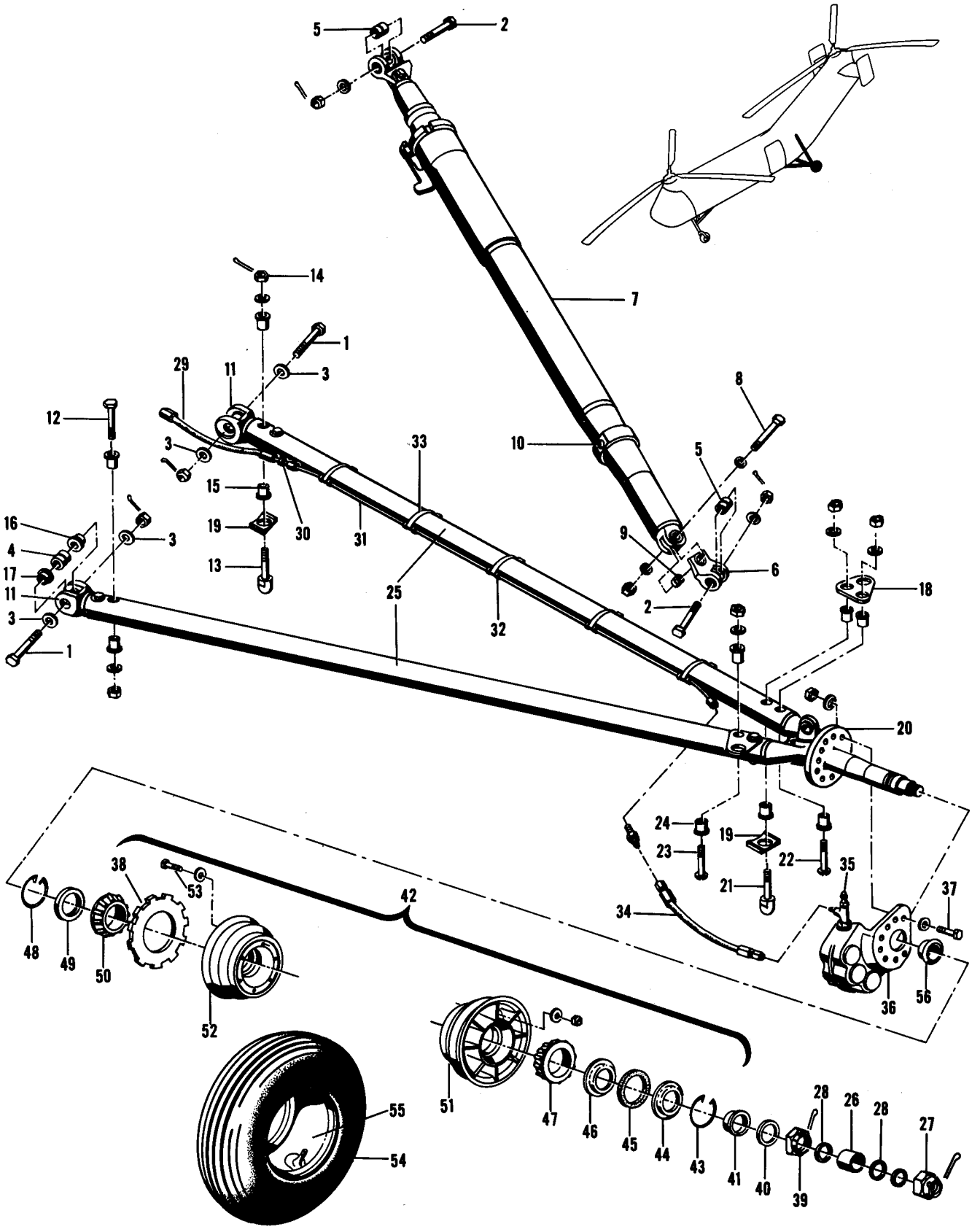

Figure 24A. Main Alighting Gear (With Type B V-Brace), H-21A, H-21B and H-21C

Figure and Index Number	Part Number	Description 1 2 3 4 5 6 7	Units per Assembly	Usable On Code
24A-				
	42L1001-1	GEAR INSTALLATION, Main alighting LH (with type B v-brace) ..	1	EH,EI
	42L1001-2	GEAR INSTALLATION, Main alighting RH (with type B v-brace) ..	1	EH,EI
	42L1002-1	. GEAR ASSEMBLY, Main alighting LH (with type B v-brace)	1	EH,EI
	42L1002-2	. GEAR ASSEMBLY, Main alighting RH (with type B v-brace)	1	EH,EI
		Attaching Parts		
-1	NAS464-10-45	. BOLT	2	EH,EI
-2	NAS464-10-37	. BOLT	2	EH,EI
	AN381-4-22	. PIN, Cotter	3	B
	AN320-10	. NUT	3	B
	AN960-1016	. WASHER	1	B
-3	AN960-1016L	. WASHER	4	EH,EI
-4	NAS72-10-107	. BUSHING	2	B
-5	NAS72-10-102	. BUSHING	2	B
		———*———		
-6	42L1106-1	. . UNIVERSAL ASSEMBLY, Oleo strut	2	EH,EI
	NAS77-10-46	. . . BUSHING	1	EH,EI
	NAS77-10-54	. . . BUSHING	1	EH,EI
	NAS77-10-25	. . . BUSHING	2	EH,EI
	MS15002-1	. . . FITTING	1	EH,EI
-7	9217C-00	. . STRUT, Oleo (CP) (used with type B v-brace)	1	EH,EI
		Attaching Parts		
-8	NAS464-10-29	. . BOLT	2	EH,EI
	AN381-4-22	. . PIN, Cotter	2	EH,EI
	AN320-10	. . NUT	2	B
	AN960C1016	. . WASHER	4	B
-9	NAS72-10-102	. . BUSHING	2	B
		———*———		
-10	NAS451-17	. . . BUTTON, Plug	2	B
	42L1004-1	. . V-BRACE ASSEMBLY, Type B	2	EH,EI
-11	42L1145-1	. . . FITTING ASSEMBLY, Inbd	2	EH,EI
		Attaching Parts		
-12	AN7-36	. . . BOLT	3	EH,EI
-13	42L1014-1	. . . PAD, Inbd jack	1	B
	AN381-3-12	. . . PIN, Cotter	1	B
-14	AN310-7	. . . NUT	1	EH,EI
	AN365-720	. . . NUT	3	EH,EI
	AN960-716	. . . WASHER	4	B
-15	42L1147-1	. . . BUSHING	8	EH,EI
		———*———		
-16	NAS77-10-54	. . . . BUSHING	1	EH,EI
-17	NAS77-10-62	. . . . BUSHING	1	EH,EI
-18	42L1140-1	. . . LUG, Towing	2	EH,EI
-19	42L1148-1	. . . SPACER, Jack pad	2	EH,EI
-20	42L1143-1	. . . FITTING ASSEMBLY, Axle	1	EH,EI
		Attaching Parts		
-21	42L1141-1	. . . PAD, Outbd jack	1	EH,EI
-22	AN27-58	. . . BOLT	2	EH,EI
-23	AN7-37	. . . BOLT	1	EH,EI
	AN365-720	. . . NUT	2	EH,EI
	AN364-720	. . . NUT	2	EH,EI
	AN960-716	. . . WASHER	4	B
-24	42L1147-1	. . . BUSHING	8	EH,EI
		———*———		
	NAS77-14-44	. . . . BUSHING	2	B
	MS15002-3	. . . . FITTING, Lubricator	1	B
-25	42L1142-1	. . . TUBE, V-brace assembly	2	EH,EI
-26	42L2014-1	. . CAP, Axle	1	B
		Attaching Parts		
-27	AN320-12	. . NUT	1	B
	AN381-4-24	. . PIN, Cotter	1	B
	AN960-1216	. . WASHER	1	B
		———*———		

Figure and Index Number	Part Number	1 2 3 4 5 6 7 Description	Units per Assembly	Usable On Code
24A-28	PHS153-3-17-24DP	. . WASHER	2	B
	42L1011-1	. . BRAKE LINE INSTALLATION, Hydraulic LH	1	B
	42L1011-2	. . BRAKE LINE INSTALLATION, Hydraulic RH	1	B
-29	MS28741-4-0112	. . . HOSE ASSEMBLY, Upper LH	1	B
	MS28741-4-0136	. . . HOSE ASSEMBLY, Upper RH	1	B
-30	AN815-4D	. . . UNION	2	B
-31	42L1011-4	. . . TUBE ASSEMBLY (Installed on aft side of LH v-brace and fwd side of RH v-brace)	1	B
-32	42L1011-9	. . . . HOSE	5	B
■ -33	321-63-325-S	. . . CLAMP (MAR)	5	EH,EI
-34	MS28741-4-0112	. . . HOSE ASSEMBLY, Lower	1	B
-35	AN784-4D	. . . TEE	1	B
	AN6289D4	. . . NUT	1	B
	AN6291-4	. . . RING	1	B
	AN6290-4	. . . GASKET	1	B
-36	9530721	. . BRAKE ASSEMBLY (GY) (GFAE)	1	B
		Attaching Parts		
-37	AN5-11A	. . BOLT	8	B
	AN363-524	. . NUT	8	B
	AN960D516	. . WASHER	16	B
		———*———		
-38	9530727	. . . DISC (GY) (GFAE)	1	B
	9510708	. . . BRAKE LINING (GY)	1	B
	42L1005-1	. . TIRE, TUBE AND WHEEL ASSEMBLY	1	B
		Attaching Parts		
-39	AN7502-23	. . NUT	1	B
	AN381-4-32	. . PIN, Cotter	1	B
-40	AN7503-23	. . WASHER	1	B
-41	42L1019-1	. . COLLAR, Outbd axle	1	B
		———*———		
-42	531031M-1	. . . WHEEL ASSEMBLY (GY) (GFAE)	1	B
-43	9510847	. . . . RING, Snap (GY) (GFAE)	1	B
-44	9521634*	. . . . RING, Bearing outer closure (GY)	1	B
-45	9510663*	. . . . RING, Felt seal (GY)	1	B
-46	9521635*	. . . . RING, Bearing inner closure (GY)	1	B
-47	19150	. . . . BEARING (TI) (GFAE)	1	B
-48	510779-2	. . . . RING, Snap (GY) (GFAE)	1	B
-49	512104-4	. . . . RETAINER (GY) (GFAE)	1	B
-50	18200	. . . . BEARING (TI) (GFAE)	1	B
-51	512156-M	. . . . WHEEL SUBASSEMBLY (GY) (GFAE)	1	B
-52	512157-M	. . . . WHEEL SUBASSEMBLY (GY) (GFAE)	1	B
		Attaching Parts		
-53	AN6-15A	. . . . BOLT	8	B
	AN365-624	. . . . NUT	8	B
	AN960-616	. . . . WASHER	16	B
		———*———		
-54	207946-4	. . . CASING, 24 x 7.7 10 ply type VII (GY) (GFAE)	1	
-55	611500	. . . TUBE, 24 x 7.7 type VII (GY) (GFAE)	1	
-56	42L1015-1	. . COLLAR, Inbd axle	1	B

*These items not supplied with the wheel assembly and must be ordered separately.

Alighting Gear

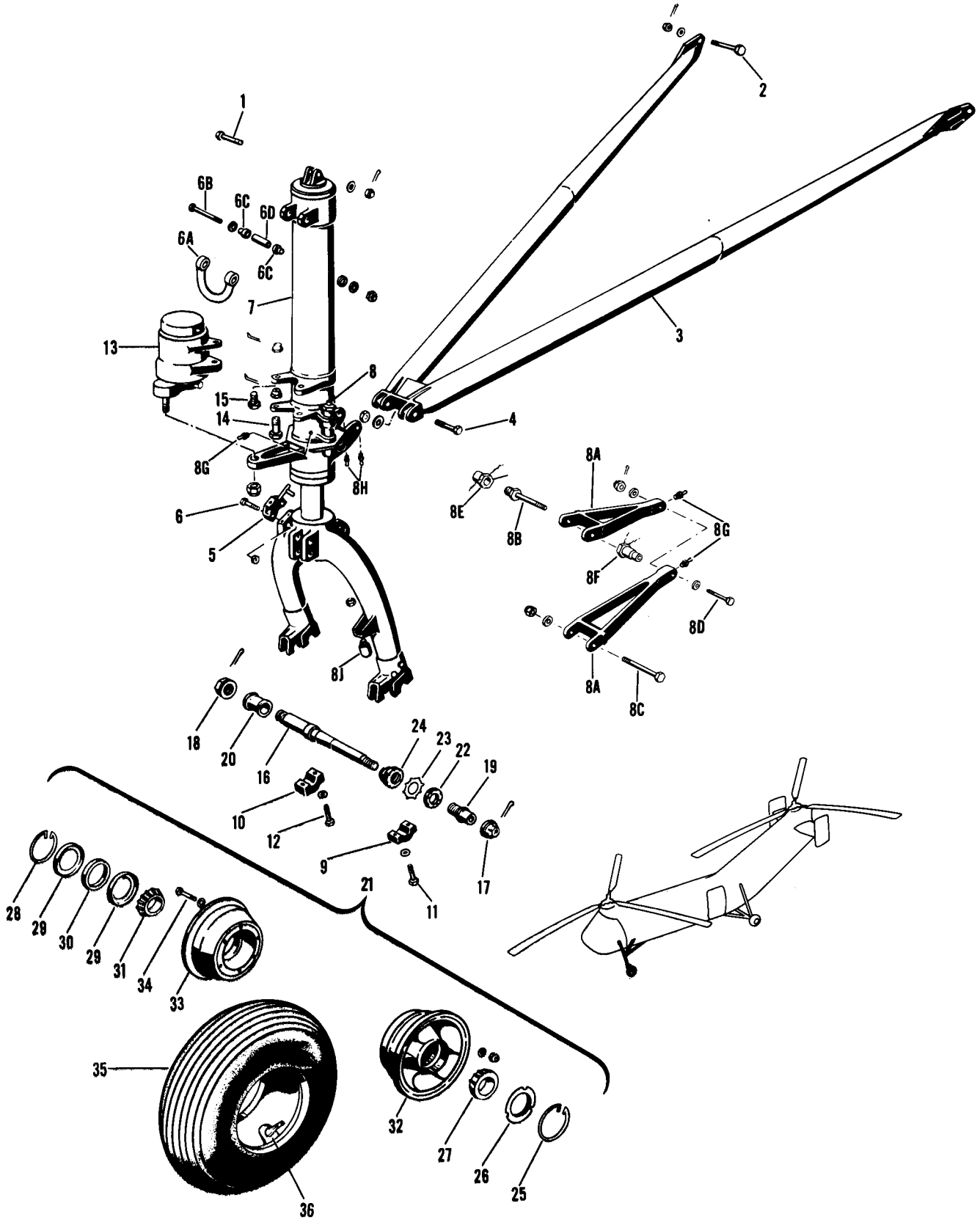

Figure 25. Auxiliary Alighting Gear, YH-21

Figure and Index Number	Part Number	Description 1 2 3 4 5 6 7	Units per Assembly	Usable On Code
25-	22L0020-1	GEAR INSTALLATION, Auxiliary alighting	1	A
	22L0020-2	. GEAR ASSEMBLY, Auxiliary alighting	1	A
		Attaching Parts		
-1	AN178-24	. BOLT	1	A
-2	AN179-24	. BOLT	2	A
	AN381-3-12	. PIN, Cotter	1	
	AN381-4-14	. PIN, Cotter	2	
	AN310-8	. NUT	1	
	AN310-9	. NUT	2	
	AN960-816	. WASHER	1	A
	AN960-916	. WASHER	2	A
		———*———		
-3	22L2003-1	. . V-BRACE ASSEMBLY	1	A
		Attaching Parts		
-4	AN178-17	. . BOLT	2	
	AN381-3-12	. . PIN, Cotter	2	A
	AN310-8	. . NUT	2	
	AN960-816	. . WASHER	2	A
		———*———		
-5	22L1058-1	. . FITTING, Mechanical rigger disconnect	1	A
		Attaching Parts		
-6	AN4-17A	. . BOLT	2	A
	AN365-428	. . NUT	2	A
	AN960-416	. . WASHER	4	A
		———*———		
-6A	22S4081-2	. . RING, Aux alighting gear mooring, see fig. 12	Ref	
	or			
	22S4081-1	. . RING, Aux alighting gear mooring, see fig. 12	Ref	
		Attaching Parts		
-6B	AN5-43	. . BOLT	1	A
	AN381-2-10	. . PIN, Cotter	1	A
	AN310-5	. . NUT	1	A
	AN960-516	. . WASHER	3	A
-6C	NAS77-5-53	. . BUSHING	2	A
-6D	NAS75-5-219	. . BUSHING	1	A
		———*———		
-7	79-01	. . STRUT ASSEMBLY, Shock (CAOP)	1	A
-8	79-0122	. . . PIN, Swivel stop (CAOP)	1	A
-8A	79-0104	. . . ARM ASSEMBLY, Torque (CAOP)	2	A
		Attaching Parts		
-8B	79-0141	. . . BOLT, Torque arm (CAOP)	1	A
-8C	AN182-54A	. . . BOLT	1	A
-8D	AN176-22	. . . BOLT	1	A
	AN381-3-12	. . . PIN, Cotter	1	A
	AN365-1216	. . . NUT	1	
	AN310-6	. . . NUT	1	A
	AN960C1216	. . . WASHER	2	
	AN960C616	. . . WASHER	1	A
-8E	79-0142	. . . FITTING, Torque arm bolt (CAOP)	1	A
-8F	79-0143	. . . FITTING, Torque arm bolt (CAOP)		
		———*———		
-8G	MS15002-2	. . . FITTING, Lubricator	3	
-8H	MS15001-3	. . . FITTING, Lubricator	2	
-8J	79-0105-3	. . . PAD, Jack (CAOP)	1	A
-9	79-0126-1	. . . CAP, LH (CAOP)	1	A
-10	79-0126-2	. . . CAP, RH (CAOP)	1	A
		Attaching Parts		
-11	79-0135-1	. . . BOLT, LH (CAOP)	2	A
-12	79-0135-2	. . . BOLT, RH (CAOP)	2	A
		———*———		
-13	A-16928	. . DAMPER, Shimmy (HD)	1	

Figure and Index Number	Part Number	1 2 3 4 5 6 7 Description	Units per Assembly	Usable On Code
25-		*Attaching Parts*		
-14	AN7-10	. . BOLT	2	A
-15	AN10-15	. . BOLT	2	A
	AN381-3-12	. . PIN, Cotter	2	A
	AN381-4-18	. . PIN, Cotter	2	A
	AN310-7	. . NUT	2	A
	AN310-18	. . NUT	2	A
		———*———		
-16	22L1060-1	. . AXLE	1	A
		Attaching Parts		
-17	22L1064-1	. . NUT, Outer	1	A
-18	22L1064-2	. . NUT, Inner	1	A
	AN381-4-22	. . PIN, Cotter	1	A
	AN381-4-36	. . PIN, Cotter	1	A
		———*———		
-19	22L1062-1	. . COLLAR, Thrust	1	A
-20	22L2060-1	. . SPACER	1	A
-21	9530531	. . WHEEL ASSEMBLY (GY) (GFAE)	1	A
		Attaching Parts		
-22	22L1064-3	. . NUT, Lock	1	A
-23	W-07	. . WASHER, SAE standard lock	1	A
-24	22L1065-1	. . NUT, Thrust	1	A
		———*———		
-25	511705-1	. . . RING, Snap (GY) (GFAE)	1	
-26	9520362*	. . . RING SUBASSEMBLY, Bearing closure (GY)	1	
-27	07100	. . . BEARING (TI) (GFAE)	1	
-28	510779-12	. . . RING, Snap (GY) (GFAE)	1	
-29	214595	. . . RETAINER, Felt (GY)	2	
-30	510525-6	. . . FELT (GY)	1	
-31	19150	. . . BEARING (TI)	1	
-32	9530486	. . . WHEEL SUBASSEMBLY (GY)	1	A
-33	9530487	. . . WHEEL SUBASSEMBLY (GY)	1	A
		Attaching Parts		
-34	AN5-13A	. . . BOLT	8	
	AN365-524	. . . NUT	8	
	AN960-516	. . . WASHER	16	A
		———*———		
-35	207992	. . CASING, 6.50 x 10 type III 6 ply (GY) (GFAE)	1	A
-36	690014	. . TUBE, 6.50 x 10 type III (GY) (GFAE)	1	A

*This item not supplied with the wheel assembly and must be ordered separately.

Alighting Gear

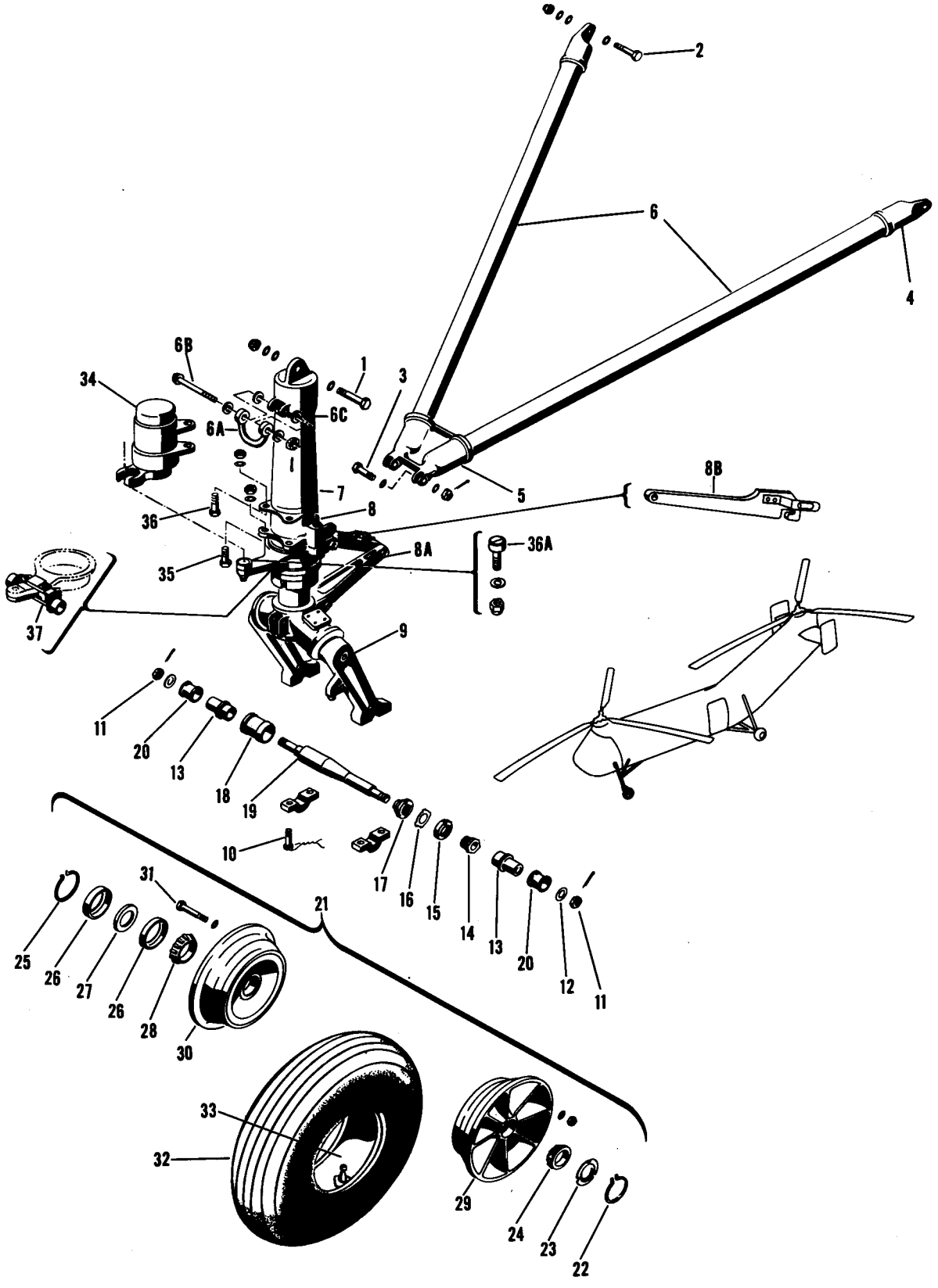

Figure 26. Auxiliary Alighting Gear, H-21A, H-21B and H-21C

Figure and Index Number	Part Number	Description 1 2 3 4 5 6 7	Units per Assembly	Usable On Code
26-	42L2001-2	GEAR INSTALLATION, Auxiliary alighting	1	E
	42L2001-1	GEAR INSTALLATION, Auxiliary alighting	1	AU
	42L2002-2	. GEAR ASSEMBLY, Auxiliary alighting	1	E
	42L2002-1	. GEAR ASSEMBLY, Auxiliary alighting	1	AU
		Attaching Parts		
-1	NAS464-8-30	. BOLT	1	B
-2	NAS464-9-31	. BOLT	2	B
	AN381-3-12	. PIN, Cotter	1	
	AN381-4-14	. PIN, Cotter	2	
	AN320-8	. NUT	1	
	AN320-9	. NUT	2	
	AN960D816	. WASHER	2	B
	AN960D816L	. WASHER	1	B
	AN960D916	. WASHER	6	B
		———*———		
	42L2103-1	. . V-BRACE ASSEMBLY	1	B
	or			
	9218-170	. . V-BRACE ASSEMBLY (CP)	1	B
		Attaching Parts		
-3	NAS464-8-24	. . BOLT	2	B
	AN178-17	. . BOLT (Used with 9218-170 v-brace)	2	B
	AN381-3-16	. . PIN, Cotter	2	B
	AN320-8	. . NUT	2	B
	AN310-8	. . NUT (Used with AN178-17 bolt)	2	B
	AN960PD816	. . WASHER	2	B
	AN960-816	. . WASHER (Used with AN178-17 bolt)	2	B
	AN960PD816L	. . WASHER	2	B
		———*———		
-4	42L2143-1	. . . FITTING, Terminal (used with 42L2103-1)	2	B
		Attaching Parts		
	AN6-30A	. . . BOLT	2	B
	AN365-624	. . . NUT	2	B
	AN960-616	. . . WASHER (Under nut)	4	B
		———*———		
	NAS77-6-50	. . . BUSHING (Used with 42L2103-1)	8	B
-5	42L2140-1	. . . FITTING, Apex (used with 42L2103-1)	1	B
		Attaching Parts		
	AN6-36A	. . . BOLT	4	B
	AN365-624	. . . NUT	4	B
	AN960-616	. . . WASHER	4	B
		———*———		
-6	42L2142-1	. . . TUBE, V-brace assembly	2	B
	NAS77-6-62	. . . BUSHING (Used with 42L2103-1)	8	B
-6A	22S4081-2	. . RING, Aux alighting gear mooring, see fig. 12	Ref	
	or			
	22S4081-1	. . RING, Aux alighting gear mooring, see fig. 12	Ref	
		Attaching Parts		
-6B	AN27-68	. . BOLT	1	B
	AN381-3-14	. . PIN, Cotter	1	B
	AN320-7	. . NUT	1	B
	AN960-716	. . WASHER	2	B
-6C	AN960-716L	. . WASHER	1	B
		———*———		
-7	42L2003-4	. . STRUT ASSEMBLY	1	B
	or			
	9097A-00	. . STRUT ASSEMBLY, Aerol (CP)	1	B
	or			
	9097C-00	. . STRUT ASSEMBLY, Aerol (CP)	1	B
	9097A-16	. . . BUSHING	2	B
-8	9097A-59	. . . PIN, Lock (CP)	1	E
	42L2003-3	. . . PIN, Lock	1	AU

Figure and Index Number	Part Number	Description 1 2 3 4 5 6 7	Units per Assembly	Usable On Code
26-8A	9097A-46	. . . ARM ASSEMBLY, Torque (CP)	2	B
-8B	9097A-64	. . . BAR, Static lock (CP)	1	B
-9	42L2003-2	. . . BUSHING	2	AU
-10	9097A-90	. . . BOLT, Axle cap (CP)	4	B
-11	AN320-12	. . . NUT	2	B
	AN381-4-22	. . . PIN, Cotter	2	B
-12	9097A-30	. . . WASHER, Axle end (CP)	2	B
-13	9097A-63	. . . SLEEVE, Axle (CP)	2	B
-14	9097A-66	. . . BUSHING, Adjusting collar (CP)	1	B
-15	9097A-69	. . . NUT, Collar lock (CP)	1	B
-16	9097A-73	. . . WASHER, Tang lock (CP)	1	B
-17	9097A-65	. . . COLLAR, Adjusting (CP)	1	B
-18	9097A-61	. . . COLLAR, Axle (CP)	1	B
-19	9097A-85	. . . AXLE (CP)	1	B
-20	42L2014-1	. . CAP, Axle	2	B
-21	530751M	. . WHEEL ASSEMBLY (GY) (GFAE)	1	B
-22	511705-1	. . . RING, Snap (GY)	1	
-23	9520362*	. . . RING SUBASSEMBLY, Bearing closure (GY)	1	
-24	07100	. . . BEARING (TI)	1	
-25	510779-12	. . . RING, Snap (GY)	1	
-26	214595	. . . RETAINER, Felt (GY)	2	
-27	510525-6	. . . FELT (GY)	1	
-28	19150	. . . BEARING (TI)	1	
-29	511156-M	. . . WHEEL SUBASSEMBLY (GY)	1	B
-30	511627-M	. . . WHEEL SUBASSEMBLY (GY)	1	B
		Attaching Parts		
-31	AN5-13A	. . . BOLT	8	
	AN365-524	. . . NUT	8	
	AN960-516	. . . WASHER	8	B
		———*———		
-32	207992	. . CASING, 6.50 x 10 type III 6 ply (GY) (GFAE)	1	E
	207983	. . CASING, 7.50 x 10 type III 6 ply (GY) (GFAE)	1	AU
-33	690014	. . TUBE, 6.50 x 10 type III (GY) (GFAE)	1	E
	690015	. . TUBE, 7.50 x 10 type III (GY) (GFAE)	1	AU
-34	A-16928	. . DAMPER, Shimmy (HD)	1	
		Attaching Parts		
-35	AN177-11A	. . BOLT	2	B
-36	AN180-21A	. . BOLT	2	B
	AN365-720	. . NUT	2	B
	AN365-1018	. . NUT	2	B
	AN960-716	. . WASHER	2	B
	AN960-1016	. . WASHER	2	B
		———*———		
-36A	CR-24	. . BEARING (TOR)	1	B
	AN364-1018	. . NUT	1	B
	AN960-1016	. . WASHER	1	B
-37	22L2064-1	. . TOWING PROVISION INSTALLATION	1	E

* This item not supplied with the wheel assembly and must be ordered separately.

Alighting Gear

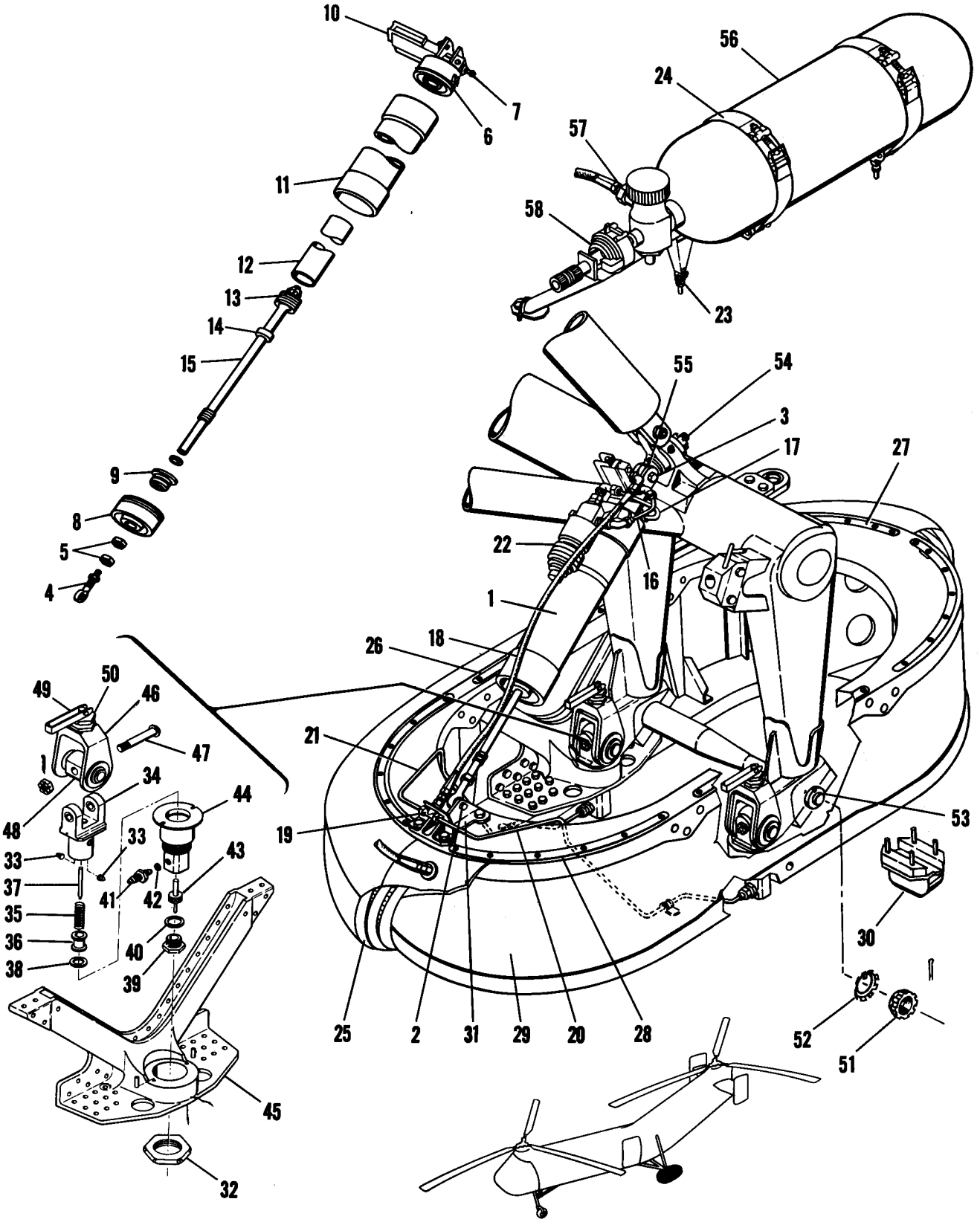

Figure 26A. Main Alighting Gear Float, YH-21

Figure and Index Number	Part Number	Description 1 2 3 4 5 6 7	Units per Assembly	Usable On Code
	22L3310-1	FLOAT KIT INSTALLATION	1	A
26A-	22L3300-1	. FLOAT INSTALLATION, Main gear LH	1	A
	22L3300-2	. FLOAT INSTALLATION, Main gear RH	1	A
	22L3301-1	. . FLOAT ASSEMBLY, LH	1	A
	22L3301-2	. . FLOAT ASSEMBLY, RH	1	A
-1	22L3304-12	. . . RIGGER ASSEMBLY	1	A
	or			
	22L3304-2	. . . RIGGER ASSEMBLY	1	A
		Attaching Parts		
-2	AN5-13A	. . . BOLT	1	A
-3	AN5-17A	. . . BOLT	1	A
	AN365-524	. . . NUT	2	A
	AN960PD516	. . . WASHER	2	A
	AN960PD516L	. . . WASHER (Used under hd of AN5-13A)	1	A
		*———		
-4	HMX-5G	. . . . ROD END (HEC)	1	A
	or			
	22L3319-1	. . . . ROD END	1	A
-5	AN316-9R	. . . . NUT, Check	2	A
-6	AN5832-1	. . . . VALVE, Bleeder check	1	J
	AN818-2D	. . . . NUT	1	J
	AN819-2Z	. . . . SLEEVE	1	J
-7	AN6287-1	. . . . VALVE, High pressure	1	J
	22L3304-13	. . . . CYLINDER ASSEMBLY (Used with 22L3304-12)	1	J
	22L3304-3	. . . . CYLINDER ASSEMBLY (Used with 22L3304-2)	1	J
-8	22L3312-2	. . . . . CAP, Lower (Used with 22L3304-13)	1	J
	22L3312-1	. . . . . CAP, Lower (Used with 22L3304-3)	1	J
		Attaching Parts		
	NAS464-5A8	. . . . . BOLT	4	J
	AN364-524	. . . . . NUT	4	J
	22L3321-1	. . . . . WASHER (Under nut)	4	J
	22L3321-2	. . . . . WASHER (Under hd)	4	J
		*———		
	AN6231A3	. . . . . SCRAPER	1	J
	22L3335-1	. . . . . WASHER	1	J
	AN6232C2	. . . . . WIPER	1	J
	AN6227B19	. . . . . PACKING, "O" ring	1	J
-9	22L3313-2	. . . . . GLAND (Used with 22L3304-13)	1	J
	22L3313-1	. . . . . GLAND (Used with 22L3304-3)	1	A
	MS28782-12	. . . . . RING, Back-up	2	J
	AN6227B12	. . . . . PACKING, "O" ring	1	J
	AN6227B40	. . . . . PACKING, "O" ring	1	J
-10	22L3322-2	. . . . . VALVE ASSEMBLY (Used with 22L3304-13)	1	J
	22L3322-1	. . . . . VALVE ASSEMBLY (Used with 22L3304-3)	1	J
		Attaching Parts		
	AN4-7A	. . . . . BOLT	2	J
	AN365-428	. . . . . NUT	2	J
	AN960A416L	. . . . . WASHER	4	J
		*———		
	22L3336-1	. . . . . HANDLE ASSEMBLY, Quick release	1	J
		Attaching Parts		
	AN381-3-10	. . . . . PIN, Cotter (used with 22L3322-2)	1	J
	AN381-2-10	. . . . . PIN, Cotter (used with 22L3322-1)	1	J
	AN960D616	. . . . . WASHER	1	J
		*———		
	NAS225DD6	. . . . . SCREW	1	J
	AN935-716L	. . . . . WASHER, Lock	1	J
	AN960PD716	. . . . . WASHER (Used with 22L3322-2)	1	J
	AN960A716L	. . . . . WASHER (Used with 22L3322-1)	1	J
	22L3334-1	. . . . . SPRING	1	J

Figure and Index Number	Part Number	Description (1 2 3 4 5 6 7)	Units per Assembly	Usable On Code
26A-	AF216C2-20	. . . . . BALL (USAF dwg No.)	1	J
	NAS50-100	. . . . . RING, Retainer	1	J
	22L3333-1	. . . . . PLUG	1	J
	MS28782-8	. . . . . RING, Back-up (used with 22L3322-2)	2	J
	AN6246-8	. . . . . RING, Back-up (used with 22L3322-1)	2	J
	AN6227B8	. . . . . PACKING, "O" ring	1	J
	AN6227B15	. . . . . PACKING, "O" ring	2	J
	22L3323-2	. . . . . PLUNGER (Used with 22L3322-2)	1	J
	22L3323-1	. . . . . PLUNGER (Used with 22L3322-1)	1	J
	S-11-8	. . . . . CUP, Leather (HG) (used with 22L3322-2)	1	J
		Attaching Parts		
	22L3359-1	. . . . . NUT	1	J
	AN381-3-10	. . . . . PIN, Cotter	1	J
		———*———		
	22L3324-2	. . . . . CYLINDER (Used with 22L3322-2)	1	J
	22L3324-1	. . . . . CYLINDER (Used with 22L3322-1)	1	J
	22L3311-3	. . . . CAP ASSEMBLY, Upper (used with 22L3304-13)	1	J
	22L3311-1	. . . . CAP ASSEMBLY, Upper (used with 22L3304-3)	1	A
		Attaching Parts		
	NAS464-5A8	. . . . BOLT	4	J
	S-1452-054	. . . . NUT, Barrel (EN)	4	J
	22L3321-2	. . . . WASHER	4	J
		———*———		
	NAS77-6-25	. . . . . BUSHING	2	J
	22L3311-4	. . . . . CAP (Used with 22L3311-3)	1	J
	22L3311-1	. . . . . CAP (Used with 22L3311-1)	1	J
	AN6227B40	. . . . PACKING, "O" ring	1	J
-11	22L3317-1	. . . . CYLINDER, Outside	1	J
-12	22L3318-1	. . . . CYLINDER, Inside	1	J
	22L3314-6	. . . . ROD ASSEMBLY, Piston (used with 22L3304-12)	1	A
	22L3314-2	. . . . ROD ASSEMBLY, Piston (used with 22L3304-2)	1	A
-13	22L3316-2	. . . . PISTON (Used with 22L3314-6)	1	A
	22L3316-1	. . . . PISTON (Used with 22L3314-2)	1	A
		Attaching Parts		
	AN310-8	. . . . NUT	1	J
	AN381-3-18	. . . . PIN, Cotter	1	J
	AN960PD816	. . . . WASHER	1	J
	AN6227B11	. . . . PACKING, "O" ring	1	J
-14	22L3315-1	. . . . STOP	1	J
-15	22L3320-2	. . . . ROD, Piston	1	A
	AN6227B25	. . . PACKING, "O" ring	1	J
	AN6246-25	. . . RING, Back-up	2	J
	AN6227B13	. . . PACKING, "O" ring	1	J
	22L3306-1	. . JETTISONING SYSTEM INSTALLATION, LH	1	A
	22L3306-2	. . JETTISONING SYSTEM INSTALLATION, RH	1	A
-16	22L3306-7	. . . TUBE ASSEMBLY	1	A
	AN837-4D	. . . ELBOW	2	J
	AN924-4D	. . . NUT	2	J
	AN6290-4	. . . GASKET	2	J
-17	22L3306-8	. . . TUBE ASSEMBLY	1	J
	AN833-4D	. . . ELBOW	1	J
	AN815-4D	. . . ELBOW	1	A
	AN924-4D	. . . NUT	2	J
	AN6290-4	. . . GASKET	2	J
-18	22L3306-26	. . . HOSE ASSEMBLY	1	A
	AN833-4D	. . . ELBOW	1	J
	AN924-4D	. . . NUT	1	J
	AN6290-4	. . . GASKET	1	J
-19	AN834-4D	. . . TEE	1	A

Figure and Index Number	Part Number	1 2 3 4 5 6 7 Description	Units per Assembly	Usable On Code
26A-	AN924-4D	. . . . NUT	1	A
	AN960PD716	. . . . WASHER	1	A
-20	22L3306-5	. . . . TUBE ASSEMBLY	1	A
-21	22L3306-6	. . . . TUBE ASSEMBLY	1	A
	22L3342-1	. . . . BRACKET	1	J
	22L3342-3	. . . . BRACKET	1	A
	902-360-2	. . . . CLAMP (MAR)	1	J
	735-21-2-8	. . . . CLAMP (AP)	1	J
-22	25460-5	. . . . VALVE ASSEMBLY (AP)	1	J
		Attaching Parts		
	AN3-14A	. . . . BOLT	2	J
	AN520R10-8	. . . . SCREW	1	J
	AN364-1032	. . . . NUT	3	J
	AN960PD10	. . . . WASHER (Under nut)	3	J
	AN960PD10L	. . . . WASHER (Under hd)	3	J
		———*———		
-23	22L4102-1	. . . SUPPORT ASSEMBLY	2	A
		Attaching Parts		
	AN23-9A	. . . BOLT	1	A
	AN4-6A	. . . BOLT	1	A
	AN364-1032	. . . NUT (Used with AN23-9A)	1	A
	AN365-428	. . . NUT (Used with AN4-6A)	1	A
	AN960-10	. . . WASHER (Used with AN23-9A under nut)	1	A
	AN960-10L	. . . WASHER (Used with AN23-9A under hd)	1	A
	AN960PD416	. . . WASHER (Used with AN4-6A under nut)	1	A
	AN960PD416L	. . . WASHER (Used with AN4-6A under hd)	1	A
		———*———		
-24	22L4104-1	. . . . CLAMP ASSEMBLY	2	J
		Attaching Parts		
	AN24-24A	. . . . BOLT	2	J
	AN364-428	. . . . NUT	2	J
	AN960-416L	. . . . WASHER	4	J
		———*———		
	22L4102-13	. . . . STOP	2	J
		Attaching Parts		
	AN23-26A	. . . . BOLT	2	J
	AN364-1032	. . . . NUT	2	J
	AN960-10L	. . . . WASHER	4	J
		———*———		
-25	22L3303-1	. . . BAG AND COVER ASSEMBLY	2	A
		Attaching Parts		
-26	22L3302-28	. . . PLATE, Clamp	2	A
-27	22L3302-29	. . . PLATE, Clamp	2	A
-28	22L3302-30	. . . PLATE, Clamp	2	A
	AN526-1032R8	. . . SCREW	16	A
	AN23-10A	. . . BOLT	46	A
	AN364-1032	. . . NUT	62	A
	AN960PD10L	. . . WASHER	168	A
		———*———		
	3194A	. . . . BAG ASSEMBLY (ACR)	1	A
	3077-2	. . . . COVER ASSEMBLY (ACR)	1	A
-29	22L3302-1	. . . FLOAT STRUCTURE ASSEMBLY, Main	2	A
-30	22L3341-1	. . . . SKID ASSEMBLY	1	A
		Attaching Parts		
	AN4-17A	. . . . BOLT	2	A
	AN4-21A	. . . . BOLT	2	A
	AN365-428	. . . . NUT	4	A
	AN960-416L	. . . . WASHER (Used with AN4-17A under nut)	2	A
	AN960PD416	. . . . WASHER (Used with AN4-21A under nut)	2	A
	AN960PD416L	. . . . WASHER (Used with AN4-17A under hd)	2	A

Figure and Index Number	Part Number	1 2 3 4 5 6 7 Description	Units per Assembly	Usable On Code
26A- .	AN960-416	. . . . WASHER (Used with AN4-21A under hd)	2	A
		———*———		
-31	22L3326-1	. . . . FITTING ASSEMBLY, Lower rigger attachment	1	A
		Attaching Parts		
	AN4-7A	. . . . BOLT	2	A
	AN365-428	. . . . NUT	2	A
	AN960PD416	. . . . WASHER (Under nut)	2	A
	AN960PD416L	. . . . WASHER (Under hd)	2	A
		———*———		
	NAS77-5-18	. . . . . BUSHING	1	A
	NAS77-5-21	. . . . . BUSHING	1	A
	22L3325-1	. . . . FITTING ASSEMBLY, Float attachment jettisoning	2	A
		Attaching Parts		
-32	22L3330-9	. . . . NUT	1	A
	AN960PD2616	. . . . WASHER	1	A
	MS33540	. . . . WIRE, Safety	AR	A
		———*———		
	22L3330-2	. . . . LINK ASSEMBLY	1	A
		Attaching Parts		
-33	22L3330-5	. . . . PIN	2	J
		———*———		
	NAS75-9-015	. . . . . BUSHING	2	A
-34	22L3330-6	. . . . . LINK	1	A
-35	22L3331-1	. . . . . SPRING	1	A
	22L3330-4	. . . . . SLEEVE ASSEMBLY	1	A
-36	22L3330-7	. . . . . . SLEEVE	1	J
-37	22L3330-8	. . . . . . PIN	1	A
-38	NAS50-75	. . . . . RING, Retainer	1	A
-39	AN122987	. . . . . PLUG	1	A
-40	AN6290-8	. . . . . GASKET	1	A
-41	AN919-2	. . . . . REDUCER	1	A
-42	AN6290-3	. . . . . GASKET	1	A
-43	22L3330-3	. . . . . PISTON	1	J
	AN6227B10	. . . . . PACKING, "O" ring	1	A
-44	22L3330-1	. . . . . HOUSING	1	A
-45	22L3328-1	. . . . FITTING ASSEMBLY, Float support structure attachment	2	A
-46	22L3332-1	. . LINK ASSEMBLY, Quick-disconnect	2	A
		Attaching Parts		
-47	22L4070-1	. . BOLT	1	A
	AN320-9	. . NUT	1	A
		———*———		
-48	22L4068-1	. . . TRUNNION	1	A
	NAS51-100	. . . RETAINER	2	A
	22L4069-1	. . . BUSHING	2	A
	22L4067-1	. . . FITTING, Disconnect	1	A
	AN316-12R	. . . NUT, Check	1	A
	22L3075-1	. . . BOLT ASSEMBLY	1	A
-49	22L3077-1	. . . . HANDLE	1	A
		Attaching Parts		
	AN393-17	. . . . PIN	1	A
	AN381-2-6	. . . . PIN, Cotter	1	A
	AN960-10	. . . . WASHER	1	A
		———*———		
-50	22L3076-1	. . . . BOLT	1	A
	M-102	. . . . SPRING (DIEA)	1	A
	22L3079-1	. . . . SPRING, Retainer	1	A
	NAS51-18	. . . . RING, Retaining	1	A
	22L3078-1	. . . . PLUNGER	1	A
-51	22L3347-1	. . NUT, Axle (replaces 22L1064-1 nut on float installation)	1	A
	AN381-4-22	. . PIN, Cotter	1	A

Figure and Index Number	Part Number	Description (1 2 3 4 5 6 7)	Units per Assembly	Usable On Code
■ 26A-52	W-065	. . WASHER, Lock (SAE std)	1	A
-53	22L3346-1	. . COLLAR, Thrust (replaces 22L1062-1 collar on float installation)	1	A
-54	22L3337-1	. . BOLT, Eye	1	A
		Attaching Parts		
	AN310-10	. . NUT	1	A
	AN381-4-22	. . PIN, Cotter	1	A
	AN960-1016L	. . WASHER (Under nut)	1	A
	NAS143-10C	. . WASHER (Under head)	1	A
		———*———		
	NAS72-10-102	. . BUSHING	1	A
	22L3338-11	. . PLATE, Eye bolt attachment LH	1	A
	22L3338-12	. . PLATE, Eye bolt attachment RH	1	A
-55	22L3327-1	. . LINK ASSEMBLY, Rigger support	2	A
	NAS77-5-28	. . . BUSHING	1	A
	NAS77-5-31	. . . BUSHING	1	A
	NAS77-6-22	. . . BUSHING	2	A
■	MS15001-1	. . . FITTING, Lubrication	1	A
	22L3327-2	. . . FITTING	1	A
	NAS72-5-011	. . BUSHING	1	A
-56	22L4105-2	. CYLINDER ASSEMBLY	2	J
-57	22L4109-1	. ADAPTER	2	J
-58	966129	. SOLENOID (WK)	2	J
	201551	. CAP, Indicator (WK)	2	J
	AN818-16D	. NUT	2	J

Alighting Gear

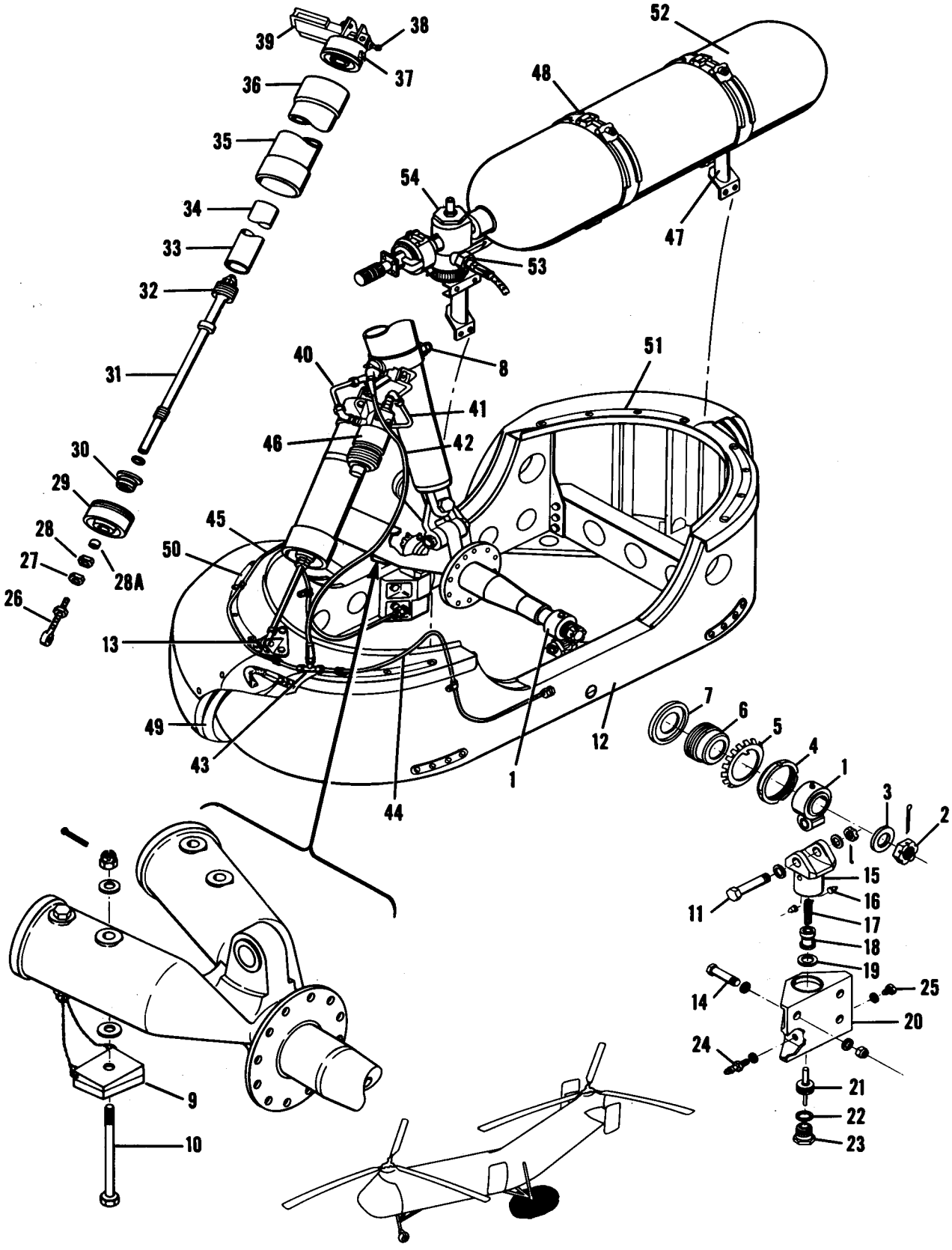

Figure 26B. Main Alighting Gear Float, H-21A

Figure and Index Number	Part Number	Description 1 2 3 4 5 6 7	Units per Assembly	Usable On Code
	22L3410-1	FLOAT KIT INSTALLATION	1	E
26B-	22L3400-1	. FLOAT INSTALLATION, Main gear LH	1	E
	22L3400-2	. FLOAT INSTALLATION, Main gear RH	1	E
-1	22L3412-1	. . LINK ASSEMBLY	2	E
		Attaching Parts		
-2	AN320-12	. . NUT	2	E
	AN381-4-24	. . PIN, Cotter	2	E
-3	22L3429-1	. . WASHER (Outbd only)	1	E
	AN960-1216	. . WASHER (Outbd only)	1	E
		———*———		
	22L3412-2	. . . LINK	1	E
	22L3411-1	. . . BUSHING	1	E
	NAS77A16-37P	. . . BUSHING	1	E
■	MS15002-1	. . . FITTING, Lubrication	1	E
-4	N-10	. . NUT, Lock (SAE std) (outbd only)	1	E
-5	W-10	. . WASHER, Lock (SAE std) (outbd only)	1	E
-6	22L3428-1	. . SLEEVE (Outbd only)	1	E
-7	22L3431-1	. . WASHER (Outbd only)	1	E
	22L3404-1	. . BOLT INSTALLATION, Eye	1	E
		Attaching Parts		
	AN365-624	. . NUT	1	E
	22L3415-1	. . WASHER	1	E
	AN364-1216	. . NUT	1	E
	AN960PD1216	. . WASHER	1	E
		———*———		
-8	22L3414-1	. . . BOLT, Eye	1	E
	22L3413-1	. . . BUSHING	1	E
-9	22L3424-1	. . WEDGE ASSEMBLY, LH	1	E
	22L3424-2	. . WEDGE ASSEMBLY, RH	1	E
		Attaching Parts		
-10	AN177-36	. . BOLT	1	E
	AN381-3-12	. . PIN, Cotter	1	E
	AN310-7	. . NUT	1	E
	PHS153-1-7-16	. . WASHER (PHL)	2	E
		———*———		
	22L3401-1	. . FLOAT ASSEMBLY, LH	1	E
	22L3401-2	. . FLOAT ASSEMBLY, RH	1	E
		Attaching Parts		
-11	NAS464-8-26	. . BOLT	1	E
	AN381-3-16	. . PIN, Cotter	1	E
	AN320-8	. . NUT	1	E
	AN960-816	. . WASHER	2	E
		———*———		
	NAS72-8-012	. . . BUSHING	1	E
-12	22L3402-1	. . . STRUCTURE ASSEMBLY, LH	1	E
	22L3402-2	. . . STRUCTURE ASSEMBLY, RH	1	E
-13	22L3418-1	. . . . FITTING	1	E
		Attaching Parts		
	AN4-7A	. . . . BOLT	3	E
	AN365-428	. . . . NUT	3	E
	AN960PD416L	. . . . WASHER	6	E
		———*———		
	22L3425-1	. . . . FITTING ASSEMBLY, Outbd	1	E
	22L3425-2	. . . . FITTING ASSEMBLY, Inbd	1	E
		Attaching Parts		
-14	AN7-16A	. . . . BOLT	4	E
	AN365-720	. . . . NUT	4	E
	AN960-716L	. . . . WASHER	8	E
		———*———		
-15	22L3430-2	. . . . . LINK ASSEMBLY	1	E

Figure and Index Number	Part Number	Description (1 2 3 4 5 6 7)	Units per Assembly	Usable On Code
26B-16	22L3330-5	. . . . . PIN	2	J
-17	22L3331-1	. . . . . SPRING	1	J
-18	22L3330-7	. . . . . SLEEVE	1	J
-19	NAS50-75P	. . . . . RING, Retainer	1	E
-20	22L3430-1	. . . . . HOUSING	1	E
-21	22L3330-3	. . . . . PISTON	1	J
-22	AN6227B10	. . . . . PACKING, "O" ring	1	E
-23	AN122987	. . . . . PLUG	1	E
	AN6290-8	. . . . . GASKET	1	E
-24	AN919-2D	. . . . . REDUCER	1	E
	AN6290-3	. . . . . GASKET	1	E
-25	AN122982	. . . . . PLUG	1	E
	AN6290-3	. . . . . GASKET	1	E
	22L3304-15	. . . RIGGER ASSEMBLY	1	E
	or			
	22L3304-5	. . . RIGGER ASSEMBLY	1	E
		Attaching Parts		
	AN6-16A	. . . BOLT	1	E
	AN365-624	. . . NUT	1	E
	AN960PD616	. . . WASHER	1	E
	AN960PD616L	. . . WASHER	1	E
		———*———		
-26	BHM-6AG	. . . . ROD END (HEC)	1	E
-27	AN316-6R	. . . . NUT, Check	1	E
-28	AN316-9R	. . . . NUT, Check	1	E
	AN960PD1016	. . . . WASHER	1	E
■ -28A	22L3353-2	. . . . SPACER	1	E
-29	22L3312-2	. . . . CAP, Lower	1	J
		Attaching Parts		
	NAS464-5A8	. . . . BOLT	4	J
	AN364-524	. . . . NUT	4	J
	22L3321-1	. . . . WASHER (Under nut)	4	J
	22L3321-2	. . . . WASHER (Under head)	4	J
		———*———		
	AN6227B19	. . . . PACKING, "O" ring	1	J
	MS28782-12	. . . . RING, Back-up	2	J
	AN6227B12	. . . . PACKING, "O" ring	1	J
	AN6227B40	. . . . PACKING, "O" ring	1	J
	AN6227B13	. . . . PACKING, "O" ring	1	J
-30	22L3313-2	. . . . GLAND	1	J
	22L3314-8	. . . . ROD ASSEMBLY, Piston (used with 22L3304-15)	1	E
	or			
	22L3314-4	. . . . ROD ASSEMBLY, Piston (used with 22L3304-5)	1	E
-31	22L3320-4	. . . . . ROD, Piston	1	E
-32	22L3315-1	. . . . . STOP	1	J
-33	22L3316-2	. . . . . PISTON	1	E
		Attaching Parts		
	AN310-8	. . . . . NUT	1	J
	AN381-3-18	. . . . . PIN, Cotter	1	J
	AN960PD816	. . . . . WASHER	1	J
		———*———		
	AN6227B11	. . . . . PACKING, "O" ring	1	J
-34	22L3318-1	. . . . CYLINDER, Inside	1	J
-35	22L3317-1	. . . . CYLINDER, Outside	1	J
-36	22L3311-3	. . . . CAP, Upper	1	J
		Attaching Parts		
	NAS464-5A8	. . . . BOLT	2	J
	S-1452-054	. . . . NUT, Barrel (EN)	2	J
	22L3321-2	. . . . WASHER	2	J
		———*———		
-37	AN5832-1	. . . . VALVE	1	E
	AN818-2D	. . . . NUT	1	E

Figure and Index Number	Part Number	1 2 3 4 5 6 7 Description	Units per Assembly	Usable On Code
26B-38	AN6287-1	. . . . VALVE	1	E
-39	22L3322-2	. . . . VALVE ASSEMBLY	1	J
		Attaching Parts		
	AN4-7A	. . . . BOLT	2	J
	AN365-428	. . . . NUT	2	J
	AN960A416L	. . . . WASHER	4	J
		———*———		
	22L3324-2	. . . . . CYLINDER	1	J
	22L3333-1	. . . . . PLUG	1	J
	22L3336-1	. . . . . HANDLE	1	J
	22L3334-1	. . . . . SPRING	1	J
	22L3323-2	. . . . . PLUNGER	1	J
	22L3406-1	. . . JETTISONING SYSTEM INSTALLATION, LH	1	E
	22L3406-2	. . . JETTISONING SYSTEM INSTALLATION, RH	1	E
-40	22L3306-8	. . . . TUBE ASSEMBLY	1	J
	AN837-4D	. . . . ELBOW	2	J
	AN924-4D	. . . . NUT	2	J
	AN6290-4	. . . . GASKET	2	J
-41	22L3406-7	. . . . TUBE ASSEMBLY	1	E
	AN833-4D	. . . . ELBOW	1	J
	AN837-4D	. . . . ELBOW	1	E
	AN924-4D	. . . . NUT	2	J
	AN6290-4	. . . . GASKET	2	J
-42	MS28741-4-0274	. . . . HOSE ASSEMBLY	1	E
	AN833-4D	. . . . ELBOW	1	J
	AN924-4D	. . . . NUT	1	J
	AN6290-4	. . . . GASKET	1	J
-43	AN824-4D	. . . . TEE	1	E
-44	22L3406-5	. . . . TUBE ASSEMBLY	1	E
-45	22L3406-6	. . . . TUBE ASSEMBLY	1	E
	22L3342-1	. . . . BRACKET	1	J
		Attaching Parts		
	NAS464-5A8	. . . . BOLT	2	J
	S-1452-054	. . . . NUT, Barrel (EN)	2	J
	22L3321-2	. . . . WASHER	2	J
		———*———		
	902-360-2	. . . . CLAMP (MAR)	1	J
	735-21-2-8	. . . . CLAMP (AP)	1	J
-46	25460-5	. . . . VALVE ASSEMBLY (AP)	1	J
		Attaching Parts		
	AN3-14A	. . . . BOLT	2	J
	AN520R10-8	. . . . SCREW	1	J
	AN364-1032	. . . . NUT	3	J
	AN960PD10	. . . . WASHER (Under nut)	3	J
	AN960PD10L	. . . . WASHER (Under hd)	3	J
		———*———		
-47	22L4106-1	. . . SUPPORT ASSEMBLY	2	E
		Attaching Parts		
	AN3-5A	. . . BOLT	8	E
	AN365-1032	. . . NUT	8	E
	AN960-10	. . . WASHER	16	E
		———*———		
-48	22L4104-1	. . . . CLAMP ASSEMBLY	2	J
		Attaching Parts		
	AN24-24A	. . . . BOLT	2	J
	AN364-428	. . . . NUT	2	J
	AN960-416L	. . . . WASHER	4	J
		———*———		
	22L4102-13	. . . . STOP	2	J

Figure and Index Number	Part Number	1 2 3 4 5 6 7 Description	Units per Assembly	Usable On Code
26B-		*Attaching Parts*		
	AN23-26A	. . . . BOLT	2	J
	AN364-1032	. . . . NUT	2	J
	AN960-10L	. . . . WASHER	4	J
		***		
-49	22L3403-1	. . . BAG ASSEMBLY, LH	1	E
	22L3403-2	. . . BAG ASSEMBLY, RH	1	E
		Attaching Parts		
-50	22L3402-27	. . . PLATE, Clamp	2	E
-51	22L3402-26	. . . PLATE, Clamp	2	E
	22L3402-36	. . . RING, Lower	2	E
	AN526-1032R8	. . . SCREW	16	J
	AN4-6A	. . . BOLT	36	E
	AN364-1032	. . . NUT	16	E
	AN365-428	. . . NUT	36	E
	AN960PD10L	. . . WASHER	32	E
	AN960-416L	. . . WASHER	36	E
	AN960PD416L	. . . WASHER	36	E
		***		
-52	22L4105-2	. CYLINDER ASSEMBLY	2	J
-53	22L4109-1	. ADAPTER	2	J
-54	966129	. SOLENOID (WK)	2	J
	201551	. CAP, Indicator (WK)	2	J
	AN818-16D	. NUT	2	J

Alighting Gear

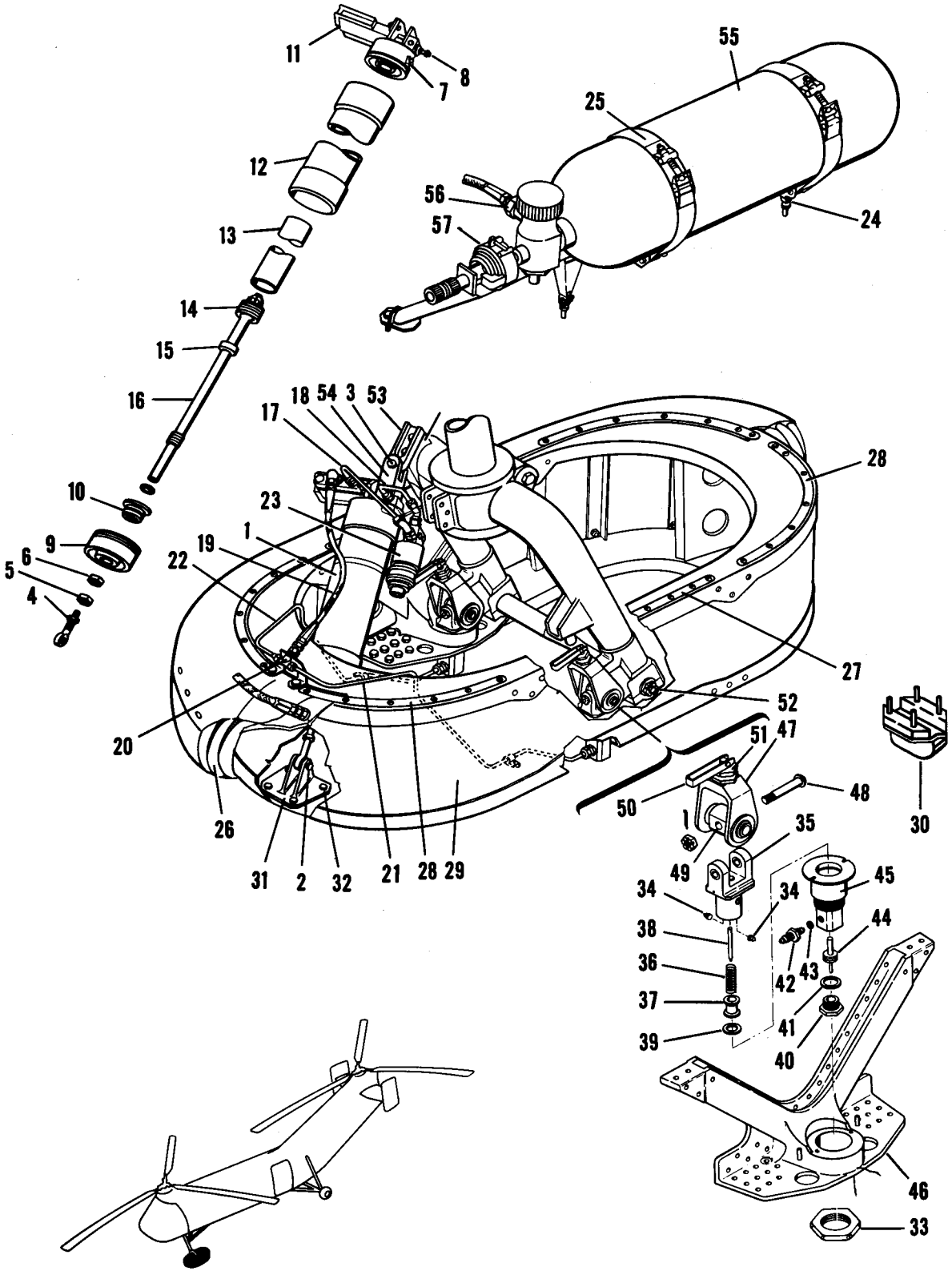

Figure 26C. Auxiliary Alighting Gear Float, YH-21

Figure and Index Number	Part Number	Description 1 2 3 4 5 6 7	Units per Assembly	Usable On Code
	22L3310-1	FLOAT KIT INSTALLATION, See figure 26A	Ref	A
26C-	22L3350-1	. FLOAT INSTALLATION, Auxiliary gear	1	A
	22L3351-1	. . FLOAT ASSEMBLY, Auxiliary gear	1	A
-1	22L3304-11	. . . RIGGER ASSEMBLY	1	A
	or			
	22L3304-1	. . . RIGGER ASSEMBLY	1	A
		Attaching Parts		
-2	AN5-13A	. . . BOLT	1	A
-3	AN5-17A	. . . BOLT	1	A
	AN365-524	. . . NUT	2	A
	AN960PD516	. . . WASHER	2	A
	AN960PD516L	. . . WASHER (Used under hd of AN5-13A)	1	A
		———*———		
-4	HMX-5G	. . . . ROD END (HEC)	1	J
	or			
	22L3319-1	. . . . ROD END	1	J
-5	AN316-6R	. . . . NUT, Check	1	J
-6	AN316-9R	. . . . NUT, Check	1	J
-7	AN5832-1	. . . . VALVE, Bleeder check	1	J
	AN818-2D	. . . . NUT	1	J
	AN819-2Z	. . . . SLEEVE	1	J
-8	AN6287-1	. . . . VALVE, High pressure	1	J
	22L3304-13	. . . . CYLINDER ASSEMBLY (Used with 22L3304-11)	1	J
	or			
	22L3304-3	. . . . CYLINDER ASSEMBLY (Used with 22L3304-1)	1	J
-9	22L3312-2	. . . . . CAP, Lower (used with 22L3304-13)	1	J
	22L3312-1	. . . . . CAP, Lower (used with 22L3304-3)	1	J
		Attaching Parts		
	NAS464-5A8	. . . . . BOLT	4	J
	AN364-524	. . . . . NUT	4	J
	22L3321-1	. . . . . WASHER (Under nut)	4	J
	22L3321-2	. . . . . WASHER (Under hd)	4	J
		———*———		
	AN6231A3	. . . . . SCRAPER	1	J
	22L3335-1	. . . . . WASHER	1	J
	AN6232C-2	. . . . . WIPER	1	J
	AN6227B19	. . . . . PACKING, "O" ring	1	J
-10	22L3313-2	. . . . . GLAND (Used with 22L3304-13)	1	J
	22L3313-1	. . . . . GLAND (Used with 22L3304-3)	1	A
	MS28782-12	. . . . . RING, Back-up	2	A
	AN6227B12	. . . . . PACKING, "O" ring	1	J
	AN6227B40	. . . . . PACKING, "O" ring	1	J
-11	22L3322-2	. . . . . VALVE ASSEMBLY (Used with 22L3304-13)	1	J
	22L3322-1	. . . . . VALVE ASSEMBLY (Used with 22L3304-3)	1	J
		Attaching Parts		
	AN4-7A	. . . . . BOLT	2	J
	AN365-428	. . . . . NUT	2	J
	AN960A416L	. . . . . WASHER	4	J
		———*———		
	22L3336-1	. . . . . HANDLE ASSEMBLY, Quick release	1	J
		Attaching Parts		
	AN381-3-10	. . . . . PIN, Cotter (used with 22L3322-2)	1	J
	AN381-2-10	. . . . . PIN, Cotter (used with 22L3322-1)	1	J
	AN960D616	. . . . . WASHER	1	J
		———*———		
	NAS225DD6	. . . . . SCREW	1	J
	AN935-716L	. . . . . WASHER, Lock	1	J
	AN960PD716	. . . . . WASHER (Used with 22L3322-2)	1	J
	AN960A716L	. . . . . WASHER (Used with 22L3322-1)	1	J
	22L3334-1	. . . . . SPRING	1	J

Figure and Index Number	Part Number	Description (1 2 3 4 5 6 7)	Units per Assembly	Usable On Code
26C-	AF216C2-20	. . . . . BALL (USAF dwg No.)	1	J
	NAS50-100	. . . . . RING, Retainer	1	J
	22L3333-1	. . . . . PLUG	1	J
	MS28782-8	. . . . . RING, Back-up (used with 22L3322-2)	2	J
	AN6246-8	. . . . . RING, Back-up (used with 22L3322-1)	2	J
	AN6227B8	. . . . . PACKING, "O" ring	1	J
	AN6227B15	. . . . . PACKING, "O" ring	2	J
	22L3323-2	. . . . . PLUNGER (Used with 22L3322-2)	1	J
	22L3323-1	. . . . . PLUNGER (Used with 22L3322-1)	1	J
	S-11-8	. . . . . CUP, Leather (HG) (used with 22L3322-2)	1	J
		Attaching Parts		
	22L3359-1	. . . . . NUT	1	J
	AN381-3-10	. . . . . PIN, Cotter	1	J
		———*———		
	22L3324-2	. . . . . CYLINDER (Used with 22L3322-2)	1	J
	22L3324-1	. . . . . CYLINDER (Used with 22L3322-1)	1	J
	22L3311-3	. . . . . CAP ASSEMBLY, Upper (used with 22L3304-13)	1	J
	22L3311-1	. . . . . CAP ASSEMBLY, Upper (used with 22L3304-3)	1	A
		Attaching Parts		
	NAS464-5A8	. . . . . BOLT	4	J
	S-1452-054	. . . . . NUT, Barrel (EN)	4	J
	22L3321-2	. . . . . WASHER	4	J
		———*———		
	NAS77-6-25	. . . . . BUSHING	2	J
	22L3311-4	. . . . . CAP (Used with 22L3311-3)	1	J
	22L3311-2	. . . . . CAP (Used with 22L3311-1)	1	J
	AN6227B40	. . . . . PACKING, "O" ring	1	J
-12	22L3317-1	. . . . . CYLINDER, Outside	1	J
-13	22L3318-1	. . . . . CYLINDER, Inside	1	J
	22L3314-5	. . . . ROD ASSEMBLY, Piston (used with 22L3304-11)	1	A
	22L3314-1	. . . . ROD ASSEMBLY, Piston (used with 22L3304-1)	1	A
-14	22L3316-2	. . . . . PISTON (Used with 22L3314-5)	1	J
	22L3316-1	. . . . . PISTON (Used with 22L3314-1)	1	A
		Attaching Parts		
	AN310-8	. . . . . NUT	1	J
	AN381-3-18	. . . . . PIN, Cotter	1	J
	AN960PD816	. . . . . WASHER	1	J
		———*———		
	AN6227B11	. . . . . PACKING, "O" ring	1	J
-15	22L3315-1	. . . . . STOP	1	J
-16	22L3320-1	. . . . . ROD, Piston	1	A
	AN6227B25	. . . . PACKING, "O" ring	1	J
	AN6246-25	. . . . RING, Back-up	2	J
	AN6227B13	. . . . PACKING, "O" ring	1	J
	22L3306-3	. . . JETTISONING SYSTEM INSTALLATION	1	A
-17	22L3306-9	. . . . TUBE ASSEMBLY	1	A
	AN833-4D	. . . . ELBOW	1	A
	AN924-4D	. . . . NUT	2	A
	AN815-4D	. . . . UNION	1	A
	AN893-2D	. . . . REDUCER	1	A
	AN6290-4	. . . . GASKET	2	A
	AN6290-6	. . . . GASKET	1	A
-18	22L3306-10	. . . . TUBE ASSEMBLY	1	A
	AN833-4D	. . . . ELBOW	1	A
	AN924-4D	. . . . NUT	1	A
	AN815-4D	. . . . UNION	1	A
	AN893-2D	. . . . REDUCER	1	A
	AN6290-4	. . . . GASKET	2	A
	AN6290-6	. . . . GASKET	1	A
-19	22L3306-27	. . . . HOSE ASSEMBLY	1	A

Figure and Index Number	Part Number	Description 1 2 3 4 5 6 7	Units per Assembly	Usable On Code
26C-	AN837-4D	. . . . ELBOW	1	A
	AN924-4D	. . . . NUT	1	A
	AN6290-4	. . . . GASKET	1	A
-20	AN834-4D	. . . . TEE	1	A
	AN924-4D	. . . . NUT	1	A
	AN960PD716	. . . . WASHER	1	A
-21	22L3306-5	. . . . TUBE ASSEMBLY	1	A
-22	22L3306-6	. . . . TUBE ASSEMBLY	1	A
	22L3342-2	. . . . BRACKET	1	A
	22L3342-3	. . . . BRACKET	1	A
	902-360-2	. . . . CLAMP (MAR)	1	J
	735-21-2-8	. . . . CLAMP (AP)	1	J
-23	25460-5	. . . . VALVE ASSEMBLY (AP)	1	J
		Attaching Parts		
	AN3-14A	. . . . BOLT	2	J
	AN520R10-8	. . . . SCREW	1	J
	AN364-1032	. . . . NUT	3	J
	AN960PD10	. . . . WASHER (Under nut)	3	J
	AN960PD10L	. . . . WASHER (Under head)	3	J
		———*———		
-24	22L4102-1	. . . SUPPORT ASSEMBLY	2	A
		Attaching Parts		
	AN23-9A	. . . BOLT	1	A
	AN4-6A	. . . BOLT	1	A
	AN364-1032	. . . NUT (Used with AN23-9A)	1	A
	AN365-428	. . . NUT (Used with AN4-6A)	1	A
	AN960-10	. . . WASHER (Used with AN23-9A under nut)	1	A
	AN960-10L	. . . WASHER (Used with AN23-9A under head)	1	A
	AN960PD416	. . . WASHER (Used with AN4-6A under nut)	1	A
	AN960PD416L	. . . WASHER (Used with AN4-6A under head)	1	A
		———*———		
-25	22L4104-1	. . . . CLAMP ASSEMBLY	2	J
		Attaching Parts		
	AN24-24A	. . . . BOLT	2	J
	AN364-428	. . . . NUT	2	J
	AN960-416L	. . . . WASHER	4	J
		———*———		
	22L4102-13	. . . . STOP	2	J
		Attaching Parts		
	AN23-26A	. . . . BOLT	2	J
	AN364-1032	. . . . NUT	2	J
	AN960-10L	. . . . WASHER	4	J
		———*———		
-26	22L3352-1	. . . BAG AND COVER ASSEMBLY	1	A
		Attaching Parts		
-27	22L3302-28	. . . PLATE, Clamp	2	A
-28	22L3302-29	. . . PLATE, Clamp	4	A
	AN526-1032R8	. . . SCREW	16	A
	AN23-10A	. . . BOLT	46	A
	AN364-1032	. . . NUT	62	A
	AN960PD10L	. . . WASHER	168	A
		———*———		
	3047A	. . . . BAG ASSEMBLY (ACR)	1	A
	3077-1	. . . . COVER ASSEMBLY (ACR)	1	A
■	22L3352-7	. . . . REPAIR KIT ASSEMBLY, Float (ACR 3324)	1	J
-29	22L3302-2	. . . STRUCTURE ASSEMBLY, Auxiliary gear float	1	A
-30	22L3341-1	. . . . SKID ASSEMBLY	1	A
		Attaching Parts		
	AN4-17A	. . . . BOLT	2	A
	AN4-21A	. . . . BOLT	2	A
	AN365-428	. . . . NUT	4	A

Figure and Index Number	Part Number	1 2 3 4 5 6 7 Description	Units per Assembly	Usable On Code
26C-	AN960-416L	. . . . WASHER (Used with AN4-17A under nut)	2	A
	AN960PD416	. . . . WASHER (Used with AN4-21A under nut)	2	A
	AN960PD416L	. . . . WASHER (Used with AN4-17A under nut)	2	A
	AN960-416	. . . . WASHER (Used with AN4-21A under hd)	2	A
		———*———		
-31	22L3358-1	. . . . FITTING ASSEMBLY, Lower rigger attachment	1	A
		Attaching Parts		
-32	AN4-10A	. . . . BOLT	4	A
	AN365-428	. . . . NUT	4	A
	AN960PD416	. . . . WASHER (Under nut)	4	A
	AN960PD416L	. . . . WASHER (Under hd)	4	A
		———*———		
	NAS77-5-18	. . . . . BUSHING	1	A
	NAS77-5-21	. . . . . BUSHING	1	A
	22L3325-1	. . . . FITTING ASSEMBLY, Float attachment jettisoning	2	A
		Attaching Parts		
-33	22L3330-9	. . . . NUT	1	A
	AN960PD2616	. . . . WASHER	1	A
	MS33540	. . . . WIRE, Safety	AR	A
		———*———		
	22L3330-2	. . . . . LINK ASSEMBLY	1	A
		Attaching Parts		
-34	22L3330-5	. . . . . PIN	2	J
		———*———		
	NAS75-9-015	. . . . . BUSHING	2	A
-35	22L3330-6	. . . . . LINK	1	A
-36	22L3331-1	. . . . . SPRING	1	J
	22L3330-4	. . . . . SLEEVE ASSEMBLY	1	A
-37	22L3330-7	. . . . . SLEEVE	1	J
-38	22L3330-8	. . . . . PIN	1	A
-39	NAS50-75	. . . . . RING, Retainer	1	A
-40	AN122987	. . . . . PLUG	1	J
-41	AN6290-8	. . . . . GASKET	1	J
-42	AN919-2	. . . . . REDUCER	1	A
-43	AN6290-3	. . . . . GASKET	1	J
-44	22L3330-3	. . . . . PISTON	1	J
	AN6227B10	. . . . . PACKING, "O" ring	1	J
-45	22L3330-1	. . . . . HOUSING	1	A
-46	22L3328-1	. . . . FITTING ASSEMBLY, Float support structure attachment	2	A
-47	22L3332-1	. . LINK ASSEMBLY, Quick-disconnect	2	A
		Attaching Parts		
-48	22L4070-1	. . BOLT	1	A
	AN320-9	. . NUT	1	A
		———*———		
-49	22L4068-1	. . . TRUNNION	1	A
	NAS51-100	. . . RETAINER	2	A
	22L4069-1	. . . BUSHING	2	A
	22L4067-1	. . . FITTING, Disconnect	1	A
	AN316-12R	. . . NUT, Check	1	A
	22L3075-1	. . . BOLT ASSEMBLY	1	A
-50	22L3077-1	. . . . HANDLE	1	A
		Attaching Parts		
	AN393-17	. . . . PIN	1	A
	AN381-2-6	. . . . PIN, Cotter	1	A
	AN960-10	. . . . WASHER	1	A
		———*———		
-51	22L3076-1	. . . . BOLT	1	A
	M-102	. . . . SPRING (DIEA)	1	A
	22L3079-1	. . . . SPRING, Retainer	1	A

Figure and Index Number	Part Number	1 2 3 4 5 6 7 Description	Units per Assembly	Usable On Code
26C-	NAS51-18	. . . . RING, Retainer	1	A
	22L3078-1	. . . . PLUNGER	1	A
-52	22L3347-1	. . NUT, Axle (replaces 22L1064-1 on float installation)	1	A
	AN381-4-22	. . PIN, Cotter	1	A
	W-065	. . WASHER, Lock (SAE std)	1	A
	22L3346-1	. . COLLAR, Thrust (replaces 22L1062-1 on float installation)	1	A
-53	22L3357-1	. . PLATE ASSEMBLY, Upper rigger support	1	A
		Attaching Parts		
	NAS144DH11	. . BOLT	2	A
	NAS143-4C	. . WASHER	2	A
	MS33540	. . WIRE, Safety	AR	A
		———*———		
	NAS77-8-22	. . . BUSHING	2	A
■	MS15001-1	. . . FITTING, Lubricator	1	A
	22L3357-2	. . . PLATE	1	A
-54	22L3356-1	. . LINK ASSEMBLY, Rigger support	1	J
	NAS77-5-28	. . . BUSHING	1	J
	NAS77-5-31	. . . BUSHING	1	J
	NAS77-6-22	. . . BUSHING	2	J
	MS15001-1	. . . FITTING, Lubrication	1	J
	22L3356-2	. . . FITTING	1	J
	NAS72-5-011	. . BUSHING	1	A
-55	22L4105-1	. CYLINDER ASSEMBLY	1	J
-56	22L4109-1	. ADAPTER	1	J
-57	966129	. SOLENOID (WK)	1	J
	201551	. CAP, Indicator (WK)	1	J
	AN818-16D	. NUT	1	J

Alighting Gear

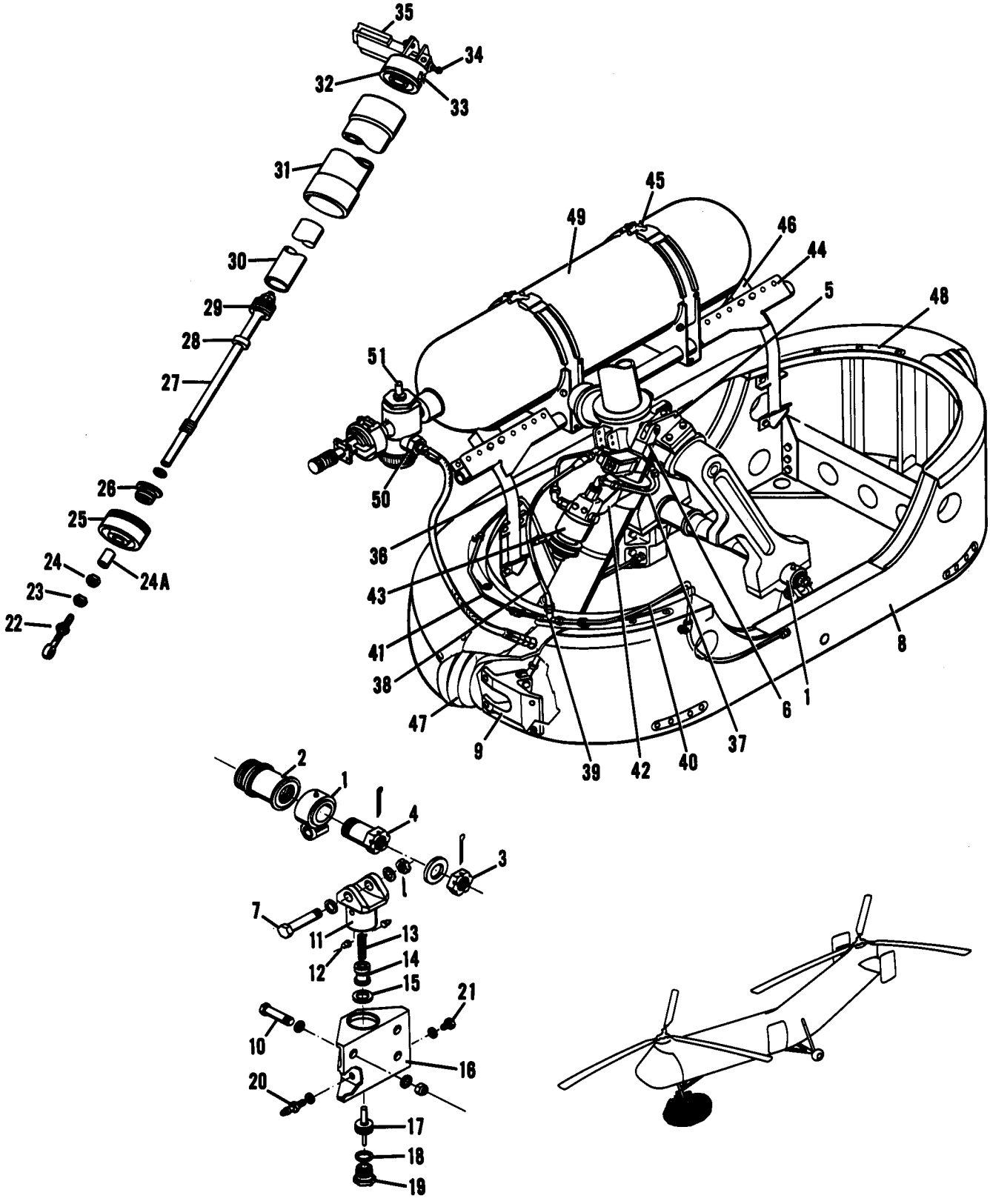

Figure 26D. Auxiliary Alighting Gear Float, H-21A

Figure and Index Number	Part Number	Description 1 2 3 4 5 6 7	Units per Assembly	Usable On Code
	22L3410-1	FLOAT KIT INSTALLATION, See figure 26B	Ref	E
26D-	22L3409-1	. FLOAT INSTALLATION, Auxiliary gear	1	E
-1	22L3412-1	. . LINK ASSEMBLY	2	E
		Attaching Parts		
-2	22L3427-1	. . BUSHING (LH only)	1	E
	AN381-4-24	. . PIN, Cotter	2	E
-3	AN320-12	. . NUT (RH only)	1	E
	AN960-1216	. . WASHER (RH only)	1	E
		———*———		
	22L3414-2	. . . LINK	1	E
	22L3411-1	. . . BUSHING	1	E
	NAS77A16-37P	. . . BUSHING	1	E
■	MS15002-1	. . . FITTING, Lubrication	1	E
-4	22L3426-1	. . SLEEVE	1	E
-5	22L3417-1	. . FITTING	1	E
		Attaching Parts		
	AN5-11A	. . BOLT	4	E
	AN365-524	. . NUT	4	E
	AN960PD516	. . WASHER	4	E
	AN960PD516L	. . WASHER	4	E
		———*———		
-6	22L3356-1	. . LINK	1	E
		Attaching Parts		
	AN5-17A	. . BOLT	1	E
	AN365-524	. . NUT	1	E
	AN960PD516	. . WASHER	2	E
		———*———		
	22L3401-3	. . FLOAT ASSEMBLY, Auxiliary gear	1	E
		Attaching Parts		
-7	NAS464-8-26	. . BOLT	2	E
	AN381-3-16	. . PIN, Cotter	2	E
	AN320-8	. . NUT	2	E
	AN960-816	. . WASHER	4	E
		———*———		
-8	22L3402-3	. . . STRUCTURE ASSEMBLY, Auxiliary gear float	1	E
-9	22L3419-1	. . . . FITTING ASSEMBLY	1	E
		Attaching Parts		
	AN24-13A	. . . . BOLT	4	E
	AN364-428	. . . . NUT	4	E
	AN960PD416L	. . . . WASHER	8	E
		———*———		
	22L3425-1	. . . . FITTING ASSEMBLY, LH	1	E
	22L3425-2	. . . . FITTING ASSEMBLY, RH	1	E
		Attaching Parts		
-10	AN7-16A	. . . . BOLT	4	E
	AN365-720	. . . . NUT	4	E
	AN960-716L	. . . . WASHER	8	E
		———*———		
-11	22L3430-2	. . . . . LINK ASSEMBLY	1	E
-12	22L3330-5	. . . . . PIN	2	J
-13	22L3331-1	. . . . . SPRING	1	J
-14	22L3330-7	. . . . . SLEEVE	1	J
-15	NAS50-75P	. . . . . RING, Retainer	1	E
-16	22L3430-1	. . . . . HOUSING	1	E
-17	22L3330-3	. . . . . PISTON	1	J
-18	AN6227B10	. . . . . PACKING, "O" ring	1	J
-19	AN122987	. . . . . PLUG	1	J
	AN6290-8	. . . . . GASKET	1	J
-20	AN919-2D	. . . . . REDUCER	1	E
	AN6290-3	. . . . . GASKET	1	J

Figure and Index Number	Part Number	Description (1 2 3 4 5 6 7)	Units per Assembly	Usable On Code
26D-21	AN122982	. . . . . PLUG	1	J
	AN6290-3	. . . . . GASKET	1	J
	22L3304-14	. . . RIGGER ASSEMBLY	1	E
		Attaching Parts		
	AN5-14A	. . . BOLT	1	E
	AN365-524	. . . NUT	1	E
	AN960PD516	. . . WASHER	2	E
		———*———		
-22	HMX-5G	. . . . ROD END (HEC)	1	J
	or			
	22L3319-1	. . . . ROD END	1	J
-23	AN316-6R	. . . . NUT, Check	1	J
-24	AN316-9R	. . . . NUT, Check	1	J
■ -24A	22L3353-1	. . . . SPACER	1	J
-25	22L3312-2	. . . . CAP, Lower	1	J
		Attaching Parts		
	NAS464-5A8	. . . . BOLT	4	J
	AN364-524	. . . . NUT	4	J
	22L3321-1	. . . . WASHER (Under nut)	4	J
	22L3321-2	. . . . WASHER (Under head)	4	J
		———*———		
	AN6227B19	. . . . PACKING, "O" ring	1	J
	AN6246-25	. . . . RING, Back-up	2	E
	AN6227B12	. . . . PACKING, "O" ring	1	J
	AN6227B40	. . . . PACKING, "O" ring	1	J
	AN6227B13	. . . . PACKING, "O" ring	1	J
-26	22L3313-2	. . . . GLAND	1	J
	22L3314-7	. . . . ROD ASSEMBLY, Piston	1	E
-27	22L3320-3	. . . . . ROD, Piston	1	E
-28	22L3315-1	. . . . . STOP	1	J
-29	22L3316-2	. . . . . PISTON	1	J
		Attaching Parts		
	AN310-8	. . . . . NUT	1	J
	AN381-3-18	. . . . . PIN, Cotter	1	J
	AN960PD816	. . . . . WASHER	1	J
		———*———		
	AN6227B11	. . . . . PACKING, "O" ring	1	J
-30	22L3318-1	. . . . CYLINDER, Inside	1	J
-31	22L3317-1	. . . . CYLINDER, Outside	1	J
-32	22L3311-3	. . . . CAP, Upper	1	J
		Attaching Parts		
	NAS464-5A8	. . . . BOLT	2	J
	S-1452-054	. . . . NUT, Barrel (EN)	2	J
	22L3321-2	. . . . WASHER	2	J
		———*———		
-33	AN5832-1	. . . . VALVE	1	J
	AN819-2Z	. . . . SLEEVE	1	J
	AN818-2D	. . . . NUT	1	J
-34	AN6287-1	. . . . VALVE	1	J
-35	22L3322-2	. . . . VALVE ASSEMBLY	1	J
		Attaching Parts		
	AN4-7A	. . . . BOLT	2	J
	AN365-428	. . . . NUT	2	J
	AN960A416L	. . . . WASHER	4	J
		———*———		
	22L3324-2	. . . . . CYLINDER	1	J
	22L3333-1	. . . . . PLUG	1	J
	22L3336-1	. . . . . HANDLE	1	J
	22L3334-1	. . . . . SPRING	1	J
	22L3323-2	. . . . . PLUNGER	1	J
	22L3406-3	. . . JETTISONING SYSTEM	1	E

Figure and Index Number	Part Number	Description (1 2 3 4 5 6 7)	Units per Assembly	Usable On Code
26D-36	22L3306-8	. . . . TUBE	1	J
	AN837-4D	. . . . ELBOW	2	E
	AN924-4D	. . . . NUT	2	E
	AN6290-4	. . . . GASKET	2	E
-37	22L3406-7	. . . . TUBE ASSEMBLY	1	E
	AN833-4D	. . . . ELBOW	1	E
	AN837-4D	. . . . ELBOW	1	E
	AN924-4D	. . . . NUT	2	E
	AN6290-4	. . . . GASKET	2	E
-38	MS28741-4-0170	. . . . HOSE ASSEMBLY	1	E
	AN833-4D	. . . . ELBOW	1	E
	AN924-4D	. . . . NUT	1	E
	AN6290-4	. . . . GASKET	1	E
-39	AN824-4D	. . . . TEE	1	E
-40	22L3406-5	. . . . TUBE ASSEMBLY	1	E
-41	22L3406-6	. . . . TUBE ASSEMBLY	1	E
-42	22L3342-1	. . . . BRACKET	1	J
		Attaching Parts		
	NAS464-5A8	. . . . BOLT	2	J
	S-1452-054	. . . . NUT, Barrel (EN)	2	J
	22L3321-2	. . . . WASHER	2	J
		———*———		
	902-360-2	. . . . CLAMP (MAR)	1	J
	735-21-2-8	. . . . CLAMP (AP)	1	J
-43	25460-5	. . . . VALVE ASSEMBLY (AP)	1	J
		Attaching Parts		
	AN3-14A	. . . . BOLT	2	J
	AN520R10-8	. . . . SCREW	1	J
	AN364-1032	. . . . NUT	3	J
	AN960PD10	. . . . WASHER (Under nut)	3	J
	AN960PD10L	. . . . WASHER (Under head)	3	J
		———*———		
-44	22L4106-1	. . . SUPPORT ASSEMBLY	1	E
		Attaching Parts		
	AN3-5A	. . . BOLT	8	E
	AN365-1032	. . . NUT	8	E
	AN960-10	. . . WASHER	16	E
		———*———		
-45	22L4104-1	. . . . CLAMP ASSEMBLY	2	J
		Attaching Parts		
	AN24-24A	. . . . BOLT	2	J
	AN364-428	. . . . NUT	2	J
	AN960-416L	. . . . WASHER	4	J
		———*———		
-46	22L4102-13	. . . . STOP	2	J
		Attaching Parts		
	AN23-26A	. . . . BOLT	2	J
	AN364-1032	. . . . NUT	2	J
	AN960-10L	. . . . WASHER	4	J
		———*———		
■ -47	22L3352-2	. . . BAG AND COVER ASSEMBLY	1	E
		Attaching Parts		
-48	22L3402-26	. . . PLATE, Clamp	4	E
	22L3402-36	. . . RING, Lower	2	E
	AN526-1032R8	. . . SCREW	16	E
	AN4-6A	. . . BOLT	36	E
	AN364-1032	. . . NUT	16	E
	AN365-428	. . . NUT	36	E
	AN960PD10L	. . . WASHER	32	E
	AN960-416L	. . . WASHER	36	E

Figure and Index Number	Part Number	1 2 3 4 5 6 7 Description	Units per Assembly	Usable On Code
26D-	AN960PD416L	. . . WASHER	36	E
		*_____		
■	22L3352-7	. . . . REPAIR KIT ASSEMBLY, Float (ACR 3324)	1	J
-49	22L4105-1	. CYLINDER ASSEMBLY	1	J
-50	22L4109-1	. ADAPTER	1	J
-51	966129	. SOLENOID (WK)	1	J
	201551	. CAP, Indicator (WK)	1	J
	AN818-16D	. NUT	1	J

Power Plant

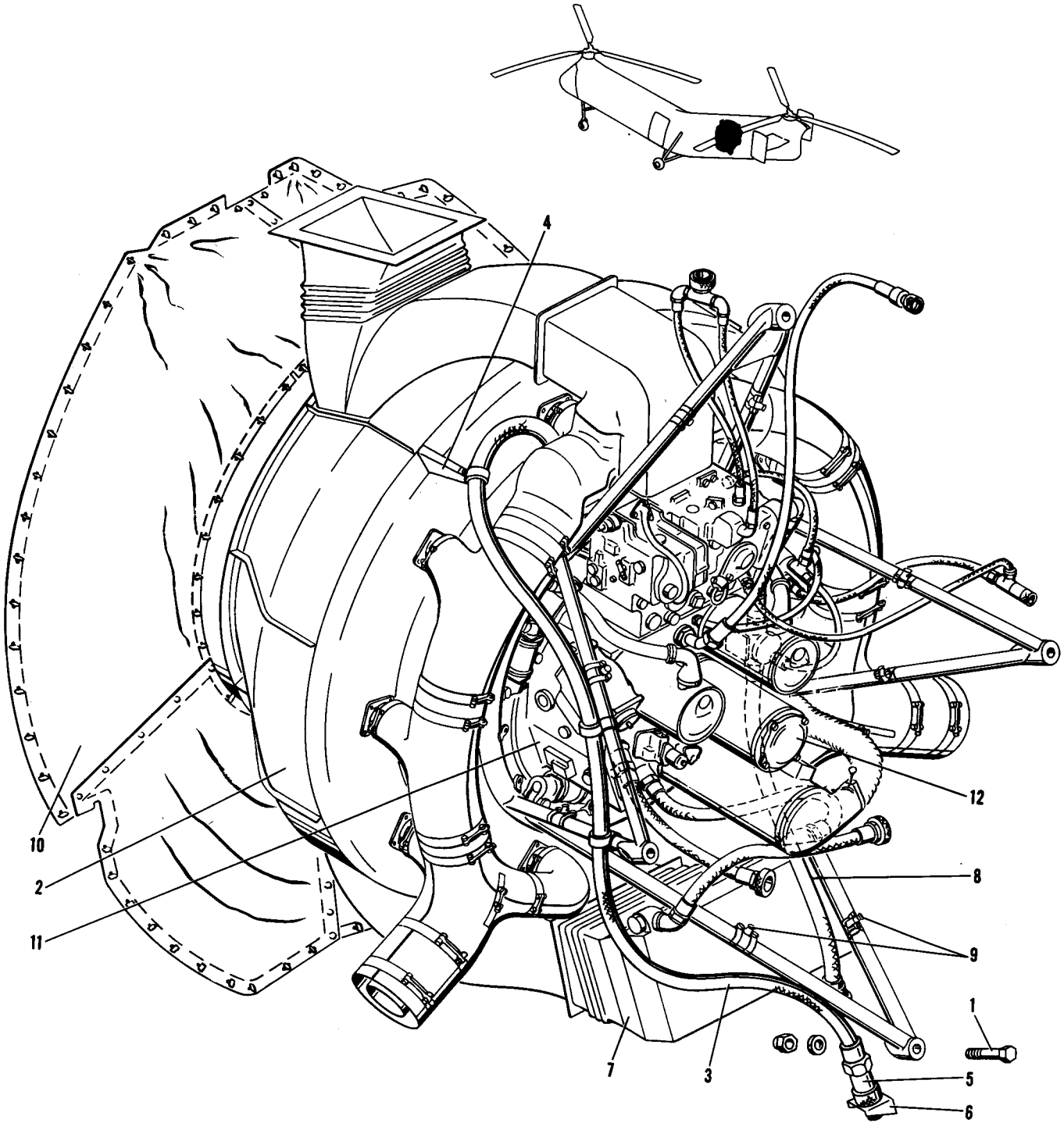

Figure 27. Power Plant

Figure and Index Number	Part Number	Description 1 2 3 4 5 6 7	Units per Assembly	Usable On Code
27-	22P0001-1	POWER PLANT INSTALLATION	1	J
	42P0001-1	POWER PLANT INSTALLATION	1	AU
	22P0001-2	. POWER PLANT INSTALLATION, Demountable	1	J
	42P1001-1	. POWER PLANT ASSEMBLY, Demountable	1	AU
	22P0003-1	. KIT ASSEMBLY, Quick engine change, see T.O. 1H-21(Y)-10	1	J
	22P0003-51	. KIT ASSEMBLY, Quick engine change, see T.O. 1H-21(Y)-10	1	D
	42P0005-1	. KIT ASSEMBLY, Quick engine change, see T.O. 1H-21(Y)-10	1	C
		Attaching Parts		
-1	AN8-23A	. BOLT	1	A,AZ
	AN8-22A	. BOLT	3	A,AZ
	AN8-24A	. BOLT (Lower)	1	BA,AU
	AN8-23A	. BOLT (LH and RH)	2	BA,AU
	AN8-22A	. BOLT (Upper)	1	BA,AU
	AN365-820	. NUT	4	
	AN960-816	. WASHER	4	
		————*————		
-2	22P6001-1	. . COOLING SYSTEM INSTALLATION, See fig. 33	Ref	
	42P6001-1	. . COOLING SYSTEM INSTALLATION, See fig. 33	Ref	
	22P1004-17	. . LINE INSTALLATION, Engine breather	1	
-3	R1755	. . . HOSE ASSEMBLY (RF)	1	
	or			
	11074-24D88	. . . HOSE ASSEMBLY (SAIF)	1	
	or			
	950544-24-88	. . . HOSE ASSEMBLY (AQ)	1	
-4	22P1057-1	. . . SUPPORT, Engine breather line	1	
	AN742D30C	. . . CLAMP	3	
	AN742D17C	. . . CLAMP	2	
-5	8-842	. . . SOCKET (WIG)	1	
	8-815-12	. . . . SEAL (WIG)	1	
-6	8-843	. . . NIPPLE (WIG)	1	
		Attaching Parts		
	AN507-1032-10	. . . SCREW	3	
		————*————		
-7	22P3001-1	. . OIL SYSTEM INSTALLATION, Demountable, see fig. 29	Ref	
-8	22P4021-1	. . FUEL SYSTEM, Demountable, see fig. 31	Ref	
-9	22E8002-1	. . DETECTOR INSTALLATION, Fire (demountable with engine)	1	
-10	22P4003-1	. . CURTAIN INSTALLATION, Engine front seal bulkhead	1	A
	22P4003-101	. . CURTAIN INSTALLATION, Engine front seal bulkhead	1	E,EM
	22P4003-103	. . CURTAIN INSTALLATION, Engine front seal bulkhead	1	HL
	22P4003-109	. . CURTAIN INSTALLATION, Engine front seal bulkhead	1	HI
	408	. . . STUD (UC)	38	J,HJ
	408	. . . STUD	40	HI
	AJ5-40	. . . STUD (DZ)	2	
	AJ5-45	. . . STUD (DZ)	2	
	GA5-312	. . . GROMMET (DZ)	4	
	22P4003-3	. . . CURTAIN ASSEMBLY, Upper RH	1	
	22P4003-5	. . . CURTAIN ASSEMBLY, Upper LH	1	J,HJ
	22P4003-107	. . . CURTAIN ASSEMBLY, Upper LH	1	HI
	22P4003-7	. . . CURTAIN ASSEMBLY, Lower RH	1	
	22P4003-9	. . . CURTAIN ASSEMBLY, Lower LH	1	
	AN227-6	. . . . BUTTON (Used with 22P4003-3)	13	
	AN227-6	. . . . BUTTON (Used with 22P4003-5 and -107)	6	
	AN227-6	. . . . BUTTON (Used with 22P4003-7)	8	
	AN227-7	. . . . SOCKET (Used with 22P4003-3)	13	
	AN227-7	. . . . SOCKET (Used with 22P4003-5 and -107)	6	
	AN227-7	. . . . SOCKET (Used with 22P4003-7)	8	
	AN227-8	. . . . STUD (Used with 22P4003-5 and -107)	7	
	AN227-8	. . . . STUD (Used with 22P4003-7)	6	
	AN227-8	. . . . STUD (Used with 22P4003-9)	14	
	22P4003-21	. . . CHANNEL ASSEMBLY, Lower LH	1	A
	22P4003-31	. . . CHANNEL ASSEMBLY, Lower LH	1	E,EM

Figure and Index Number	Part Number	Description 1 2 3 4 5 6 7	Units per Assembly	Usable On Code
27-	22P4003-104	. . . CHANNEL ASSEMBLY, Lower LH	1	EI,EH
	22P4003-22	. . . CHANNEL ASSEMBLY, Lower RH	1	A
	22P4003-32	. . . CHANNEL ASSEMBLY, Lower RH	1	E,EM
	22P4003-105	. . . CHANNEL ASSEMBLY, Lower RH	1	EI,EH
	5-0-120	. . . . STUD (LFK)	2	J,EM
	5-0-140	. . . . STUD (LFK)	1	E,EM
	5-0-160	. . . . STUD (LFK)	1	A
	5-0-200	. . . . STUD (LFK)	1	E,EM
	5-0-220	. . . . STUD (LFK)	1	A
	408	. . . . STUD (UC)	12	J,EM
	AJ5-40	. . . . STUD (DZ)	2	EI,EH
	GOS-5-93	. . . . GROMMET (LFK)	4	J,EM
	GA5-312	. . . . GROMMET (DZ)	2	EI,EH
■ -11	R1820-103	. . ENGINE (GFAE) (WAC)	1	
-12	22P1001	. ACCESSORY INSTALLATION, Power plant, see fig. 28*	Ref	
■	42P1001-1	. ACCESSORY INSTALLATION, Power plant, see fig. 28*	Ref	

* For proper usable on codes and complete breakdown, see figure number as indicated.

Power Plant

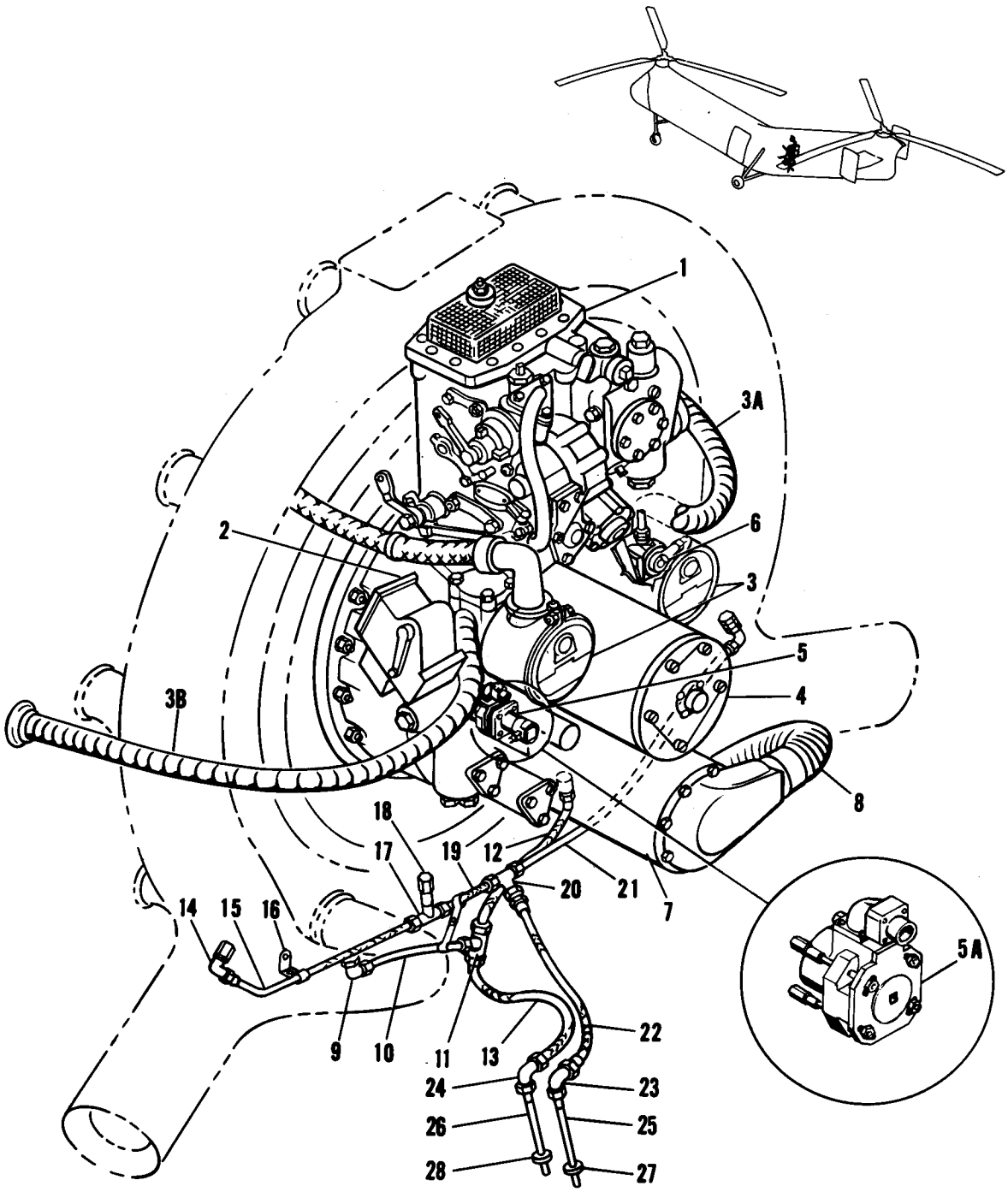

Figure 28. Accessory Installation

Figure and Index Number	Part Number	Description 1 2 3 4 5 6 7	Units per Assembly	Usable On Code
28-	22P1001-1	ACCESSORY INSTALLATION, Power plant	1	J
	or			
	22P1001-10	ACCESSORY INSTALLATION, Power plant	1	J
	42P1001-1	ACCESSORY INSTALLATION, Power plant	1	AU
-1	PD12K19	. CARBURETOR (ST) (GFAE)	1	
-2	22C2328-1	. BELLCRANK INSTALLATION, Manifold pressure regulator replacement kit*	1	E
	22C2328-2	. . BELLCRANK ASSEMBLY	1	E
		Attaching Parts		
	AN6H11A	. . BOLT	2	E
	AN5H10A	. . BOLT	2	E
	AN960-516	. . WASHER	4	E
		———*———		
	22C2328-3	. . . WELD ASSEMBLY	1	E
	22C2328-4	. . . WELD ASSEMBLY	1	E
	22C2328-5	. . . WELD ASSEMBLY	1	E
	22C2328-16	. . . SHAFT	1	E
	22C2328-14	. . ROD ASSEMBLY	1	E
		Attaching Parts		
	AN24-20	. . BOLT	1	E
	AN23-16	. . BOLT	1	E
	AN320-4	. . NUT	1	E
	AN320-3	. . NUT	1	E
	AN381-2-12	. . PIN, Cotter	1	E
	AN381-2-10	. . PIN, Cotter	1	E
		———*———		
-3	S9LU-3	. MAGNETO (AM) (GFAE)	2	
	22P1051-1	. TUBE INSTALLATION, Magneto blast	1	A,AK
	22P1051-40	. TUBE INSTALLATION, Magneto blast	1	E
	or			
	22P1051-21	. TUBE INSTALLATION, Magneto blast	1	E
	22P1051-30	. TUBE INSTALLATION, Magneto blast	1	D,AM
-3A	22P1051-3	. . TUBE INSTALLATION, Magneto blast LH	1	A,AK
	22P1051-35	. . TUBE INSTALLATION, Magneto blast LH	1	E
	or			
	22P1051-22	. . TUBE INSTALLATION, Magneto blast LH	1	E
	22P1051-37	. . TUBE INSTALLATION, Magneto blast LH	1	D,AM
-3B	22P1051-2	. . TUBE INSTALLATION, Magneto blast RH	1	J,AK
	22P1051-36	. . TUBE INSTALLATION, Magneto blast RH	1	D,E,AM
	22P1051-20	. . . SUPPORT	1	A,AK
	22P1051-29	. . . SUPPORT	1	E
	or			
	22P1051-28	. . . SUPPORT	1	E
	22P1051-33	. . . SUPPORT	1	D,AM
	22P1051-19	. . . SUPPORT	1	J,AK
	22P1051-34	. . . SUPPORT	1	D,E,AM
	22P1016-1	. . . BELLMOUTH, Blast tube	1	
	or			
	22P1016-2	. . . BELLMOUTH, Blast tube	1	
	22P1061-1	. . . FLANGE	1	D,E,AM
	22P1051-16	. . . NOZZLE (Used with 22P1051-2)	1	J,AK
	22P1051-17	. . . NOZZLE (Used with 22P1051-3)	1	A,AK
	22P1051-32	. . . NOZZLE (Used with 22P1051-36 and 22P1051-37)	1	D,E,AM
	22P1056-1	. . . SCOOP, Air	1	E
	22P1051-5	. . . CLAMP, Half (used with 22P1051-2, -3, and -22)	2	J,AK
	AN742D36C	. . . CLAMP (Used with 22P1051-22, -35, -36 and -37)	2	D,E,AM
	AN742D34C	. . . CLAMP (Used with 22P1051-2, -3, -35, -36 and -37)	1	
	AN742D46C	. . . CLAMP (Used with 22P1051-2, -3 and -22)	1	J,AK

*For list of parts required for replacement of limiter, see T.O. 1H-21A-506.

Figure and Index Number	Part Number	1 2 3 4 5 6 7 Description	Units per Assembly	Usable On Code
28-	AN737RM74	. . . CLAMP (Used with 22P1051-35, -36 and -37)	1	D,E,AM
	AN741TD16	. . . CLAMP (Used with 22P1051-2, and -3)	1	J,AK
	22P1051-8	. . . TUBE ASSEMBLY (Used with 22P1051-3)	1	A,AK
	22P1060-3	. . . DUCT (Used with 22P1051-35 and -36)	1	D,E,AM
	or			
	22P1051-23	. . . TUBE ASSEMBLY (Used with 22P1051-22)	1	E
	22P1060-2	. . . DUCT (Used with 22P1051-37)	1	D,AM
	22P1051-9	. . . TUBE ASSEMBLY (Used with 22P1051-2)	1	J,AK
-4	1416-122-J	. STARTER (ECP) (GFAE)	1	J,HJ
	1416-122-J	. STARTER (ECP)	1	HI
-5	2CM9AAA-3	. GENERATOR, Tachometer (GEMI) GFAE	1	
-5A	10-35370-1	. BREAKER ASSEMBLY, Synchronizing (SNT)	1	FF
-6	AN4100-1	. PUMP, Fuel (GFAE)	1	J,EM
	2P-R400-BRD5	. PUMP, Fuel (PE)	1	EH,EI
	or			
	RG-9570-2	. PUMP, Fuel (RO)	1	EH,EI
-7	2CM76C4	. GENERATOR (GE)	1	
	or			
	2CM76C3	. GENERATOR (GE)	1	
	or			
	2CM76C2	. GENERATOR (GE)	1	
	or			
	2CM76C1	. GENERATOR (GE)	1	
-8	22P1012-1	. TUBE INSTALLATION, Generator blast	1	J
	22P1012-2	. TUBE INSTALLATION, Generator blast	1	AU
	3209093	. . TUBE (ARW)	1	
	AN737RM107	. . CLAMP	2	J
	AN737RM107	. . CLAMP	1	AU
	22P1020-1	. . SUPPORT ASSEMBLY	1	G
	22P1050-1	. . SUPPORT ASSEMBLY	1	X,AU
	AN742D54C	. . CLAMP	1	
	3-1821	. . TUBE, Fwd blast (ARW)	1	
	22P1021-1	. . DUCT, Generator blast transition	1	J
	42P1054-3	. . DUCT, Generator blast transition	1	AU
	22P1043-1	. JUMPER, Engine dynafocal bonding (used with 22P1049-1)	4	
	22P1049-1	. CLIP (Used with 22P1043-1)	4	
	22P1004-1	. LINE INSTALLATION, Exhaust shroud drain (demountable)	1	
-9	AN833-4	. . ELBOW	1	
	AN900-7	. . GASKET	1	
	AN924-4	. . NUT	1	
-10	MS28741-4-0160	. . HOSE ASSEMBLY	1	
	AN742-10C	. . CLAMP	1	
-11	AN824-4	. . TEE	1	
-12	MS28741-4-0040	. . HOSE ASSEMBLY	1	
	AN832-4	. . UNION	1	
	AN924-4	. . NUT	1	
-13	MS28741-4-0114	. . HOSE ASSEMBLY	1	
	22P1004-2	. LINE INSTALLATION, Intake pipe drain (demountable)	1	AA
	22P1004-20	. LINE INSTALLATION, Intake pipe drain (demountable)	1	AB,AU
-14	AN822-4	. . ELBOW	1	
-15	MS28741-4-0166	. . HOSE ASSEMBLY	1	
-16	22P1004-18	. . CLIP	1	
	AN742-10C	. . CLAMP	1	
-17	AN825-4	. . TEE	1	
-18	22P1004-25	. . ADAPTER	1	
-19	MS28741-4-0040	. . HOSE ASSEMBLY	1	
	AN742-10C	. . CLAMP	1	
-20	AN926-6	. . TEE	1	AA
	AN938-5	. . TEE	1	AB,AU
	AN919-6	. . REDUCER	2	AA
	AN919-3	. . REDUCER	2	AB,AU
	AN900-7	. . GASKET	2	AB,AU

Figure and Index Number	Part Number	1 2 3 4 5 6 7 Description	Units per Assembly	Usable On Code
28-	AN924-6	. . NUT	1	AA
	AN924-5	. . NUT	1	AB,AU
	AN832-6	. . UNION	1	AA
	AN832-5	. . UNION	1	AB,AU
-21	MS28741-4-0140	. . HOSE ASSEMBLY	1	AA
	MS28741-4-0190	. . HOSE ASSEMBLY	1	AB,AU
	AN823-4	. . ELBOW	1	
-22	MS28741-6-0140	. . HOSE ASSEMBLY	1	AA
	MS28741-5-0140	. . HOSE ASSEMBLY	1	AB,AU
	22P1004-3	. LINE INSTALLATION, Exhaust shroud keel drain	1	
	22P1004-4	. LINE INSTALLATION, Intake pipe keel drain	1	AA
	22P1004-21	. LINE INSTALLATION, Intake pipe keel drain	1	AB,AU
-23	AN833-4	. . ELBOW	1	
-24	AN833-6	. . ELBOW	1	AA
	AN833-5	. . ELBOW	1	AB,AU
	AN924-4	. . NUT	1	
	AN924-6	. . NUT	1	AA
	AN924-5	. . NUT	1	AB,AU
	AN818-4	. . NUT	1	
	AN818-6	. . NUT	1	AA
	AN818-5	. . NUT	1	AB,AU
	AN819-4	. . SLEEVE	1	
	AN819-6	. . SLEEVE	1	AA
	AN819-5	. . SLEEVE	1	AB,AU
	AN960-716L	. . WASHER	1	
	AN960-916L	. . WASHER	1	AA
	AN960-816L	. . WASHER	1	AB,AU
-25	22P1004-5	. . TUBE ASSEMBLY, Exhaust shroud drain	1	
-26	22P1004-6	. . TUBE ASSEMBLY, Intake pipe drain	1	AA
	22P1004-22	. . TUBE ASSEMBLY, Intake pipe drain	1	AB,AU
-27	AN931-4-7	. . GROMMET	1	
-28	AN931-6-10	. . GROMMET	1	AA
	AN931-5-9	. . GROMMET	1	AB,AU

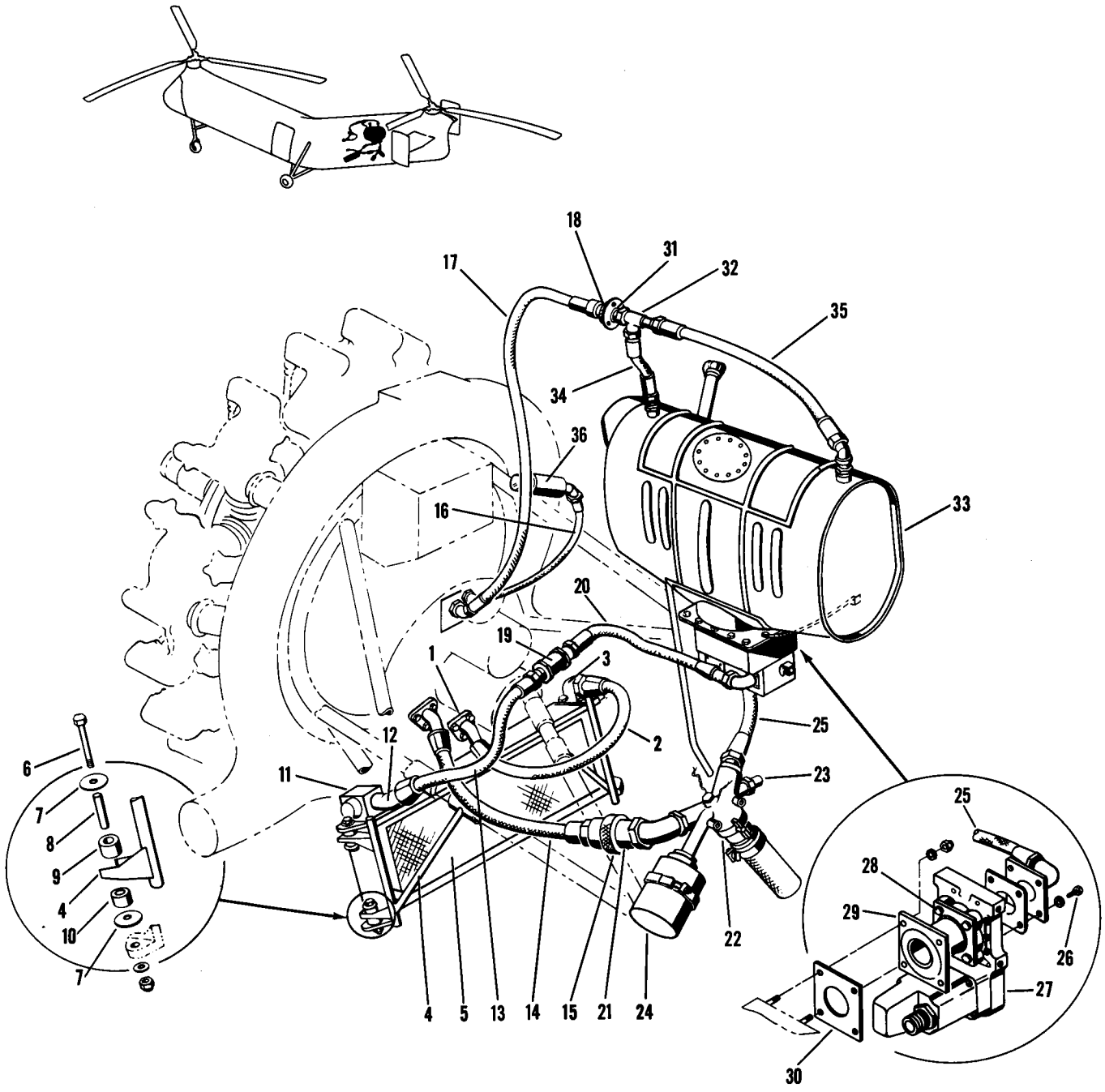

Figure 29. Oil System

Figure and Index Number	Part Number	Description 1 2 3 4 5 6 7	Units per Assembly	Usable On Code
29-	22P3001-1	OIL SYSTEM INSTALLATION, Demountable	1	
	22P3001-4	. HOSE ASSEMBLY	1	
		Attaching Parts		
	AN363C524	. NUT	3	
	AN365-428	. NUT	4	
	AN960-516	. WASHER	3	
	AN960D416	. WASHER	4	
		———*———		
-1	9345-20S	. . FITTING ASSEMBLY (AR)	1	
-2	22P3001-8	. . HOSE	1	
-3	MS28750D20	. . FITTING ASSEMBLY	1	
	AN4171-20	. GASKET	1	
	AN763-20	. GASKET	1	
	22P3030-1	. COOLER INSTALLATION, Oil	1	
-4	22P3031-1	. . SUPPORT ASSEMBLY	1	A
	22P3031-30	. . SUPPORT ASSEMBLY	1	B
		Attaching Parts		
	AN4-13A	. . BOLT	16	
	AN365-428	. . NUT	16	
	AN960-416	. . WASHER	32	
		———*———		
-5	8518498	. . COOLER, Oil (HR)	1	
		Attaching Parts		
-6	AN4-20A	. . BOLT	4	
	AN365-428	. . NUT	4	
	AN960D416	. . WASHER	4	
-7	PHS153-3-4-15	. . WASHER (PHL)	8	
		———*———		
-8	22P3045-1	. . SPACER	4	
-9	22P3501-1	. . BUSHING	4	A
-10	22P3501-2	. . BUSHING	4	A
	22P3501-3	. . BUSHING	8	B
	8504273	. . GASKET (HR)	1	
-11	8518522	. . VALVE (HR)	1	
		Attaching Parts		
	8517882	. . BOLT (HR)	2	
	8517883	. . BOLT (HR)	2	
	AN960-416	. . WASHER	4	
■	AN995F41	. . WIRE, Lock	AR	
		———*———		
	DV-8	. . . VALVE, Thermostatic (DEL)	1	
	AN763-20	. GASKET	1	
	22P3001-6	. HOSE ASSEMBLY	1	
-12	MS28749D20	. . FITTING ASSEMBLY	1	
-13	22P3001-10	. . HOSE	1	
	MS28740-20	. . FITTING ASSEMBLY	1	
	AN4171-24	. GASKET	1	
-14	9550-24-23.5	. HOSE ASSEMBLY (AR)	1	
-15	6-816A	. SOCKET (WIG)	1	
	6-850-12A	. . SEAL, Large (WIG)	1	
	6-749-10A	. . SEAL, Small (WIG)	1	
-16	MS28741-4-0200	. HOSE ASSEMBLY	1	
	22P3001-13	. FITTING ASSEMBLY (Used with 7601-2A5-1A (ECP) oil press. transmitter)	1	
	22P3001-12	. FITTING ASSEMBLY (Used with 7707-2A5-1 (ECP) oil press. transmitter)	1	
	AN816-4D	. . NIPPLE (Used with 7707-2A5-1 (ECP) oil press. transmitter)	1	
	AN822-4D	. . ELBOW (Used with 7601-2A5-1A (ECP) oil press. transmitter)	1	
	AN916-1D	. . ELBOW (Used with 7707-2A5-1 (ECP) oil press. transmitter)	1	
	43A14984	. . FITTING (USAF dwg No.)	1	
	AN5832-2	. . VALVE, Check	1	
	AN929-2	. . CAP	1	

Figure and Index Number	Part Number	Description 1 2 3 4 5 6 7	Units per Assembly	Usable On Code
29-	17P4040-1	. . RESTRICTOR (Used with 7707-2A5-1 (ECP) oil press. transmitter)	1	
	MS29513-11	. . PACKING, "O" ring (used with 7707-2A5-1 (ECP) oil press. trans-	1	
	or	mitter)		
	AN6227-6	. . PACKING, "O" ring (used with 7707-2A5-1 (ECP) oil press. trans-	1	
		mitter)		
	AN823-12D	. ELBOW	1	
-17	MS28741-12-0450	. HOSE ASSEMBLY	1	
-18	8-301A	. SOCKET (WIG)	1	
	8-301-12A	. . SEAL (WIG)	1	
	22P0001-3	POWER PLANT INSTALLATION, Fuselage	1	J
	42P0001-2	POWER PLANT INSTALLATION, Fuselage	1	AU
	22P3001-2	. OIL SYSTEM INSTALLATION, Fuselage	1	J
	42P3001-1	. OIL SYSTEM INSTALLATION, Fuselage	1	AU
-19	22P3001-11	. . VALVE, Check (made from 1111-517707 (PA) check valve)	1	
-20	22P3001-14	. . HOSE ASSEMBLY	1	A
	22P3001-15	. . HOSE ASSEMBLY	1	E
	42P3001-6	. . HOSE ASSEMBLY	1	AU
	AN763-24	. . GASKET	1	
-21	6-818	. . NIPPLE (WIG)	1	
	PHS503-1	. . ELBOW (PHL)	1	
■	AN924-24D	. . NUT	2	
	MS29512-24	. . GASKET	2	
	or			
	AN6290-24	. . GASKET	2	
	22P3012-1	. . Y-DRAIN INSTALLATION	1	A,BB
	22P3012-5	. . Y-DRAIN INSTALLATION	1	BC,ED
	22P3012-10	. . . Y-DRAIN INSTALLATION	1	DU
-22	24342	. . . Y-DRAIN ASSEMBLY (KOE)	1	A,BB
	24342-1	. . . Y-DRAIN ASSEMBLY (KOE)	1	BC,AU
		Attaching Parts		
	AN3-16A	. . . BOLT	2	S
	AN3-20A	. . . BOLT	2	T,B
	AN365-1032	. . . NUT	2	
	AN960D10	. . . WASHER	2	J,ED
	AN960D10	. . . WASHER	4	DU
	AN960D10L	. . . WASHER (Used under head)	2	DU
		———*———		
	AN900-16	. . . GASKET	1	
▌ -23	AN5525-1	. . . BULB, Electrical resistance type thermometer (GFAE)	1	J,HJ
▌	MS28034-1	. . . BULB, Electrical resistance type thermometer (GFAE)	1	HI
	AN900-16	. . . GASKET	1	
	22P3012-11	. . . PLATE, Reinforcement	1	DU
	22P3012-12	. . . PLATE, Reinforcement	1	DU
-24	12280-1	. . . THERMOSTAT (AIR)	1	A,BB
	AN906-16	. . . PLUG	1	BC,AU
▌	22P3012-6	. . . HOSE	1	
▌		*Attaching Parts*		
▌	AN737-44	. . . CLAMP	1	
▌		———*———		
▌	22P3012-13	. . . GROMMET	1	
-25	22P3001-16	. . HOSE ASSEMBLY	1	A
	22P3001-17	. . HOSE ASSEMBLY	1	E
	42P3001-7	. . HOSE ASSEMBLY	1	AU
		Attaching Parts		
-26	AN4H5A	. . BOLT	4	
	AN960D416	. . WASHER	4	
	AN995F41	. . WIRE, Lock	AR	
		———*———		

Figure and Index Number	Part Number	1 2 3 4 5 6 7 Description	Units per Assembly	Usable On Code
29-	AN763-24	. . GASKET	1	
-27	WE4801-1-½D	. . VALVE, Shut-off (WTR)	1	J
	42P3030-1	. . VALVE, Shut-off	1	AU
	or			
	WE4801-1-½D	. . VALVE, Shut-off (WTR)	1	
		Attaching Parts		
-28	AN4H5A	. . BOLT	4	
	AN960D416	. . WASHER	4	
	AN995F41	. . WIRE, Lock	AR	
		———*———		
	AN763-24	. . GASKET	1	
-29	22P3063-1	. . ADAPTER	1	
-30	AN763-32	. . GASKET	1	
-31	8-310FL	. . NIPPLE (WIG)	1	
		Attaching Parts		
	AN3-4A	. . BOLT	3	
	AN365-1032	. . NUT	3	
	AN960-10	. . WASHER	3	
		———*———		
-32	AN742D12	. . TEE	1	
	AN924-12D	. . NUT	1	
	MS29512-12	. . GASKET	1	
	or			
	AN6290-12	. . GASKET	1	
-33	22P9000-1	. . TANK ASSEMBLY, Power plant oil, see fig. 30	Ref	
	22P3003-250	. . TANK ASSEMBLY, Power plant oil, see fig. 30	Ref	
	42P3003-1	. . TANK ASSEMBLY, Power plant oil, see fig. 30A	Ref	
-34	MS28741-12-0074	. . HOSE ASSEMBLY	1	J
	MS28741-12-0124	. . HOSE ASSEMBLY	1	AU
-35	MS28741-12-0317	. . HOSE ASSEMBLY	1	J
	MS28741-12-0250	. . HOSE ASSEMBLY	1	AU
	AN749-3-8	. . JUMPER	1	
-36	22E1179-1	TRANSMITTER INSTALLATION, Oil, see fig. 76	Ref	

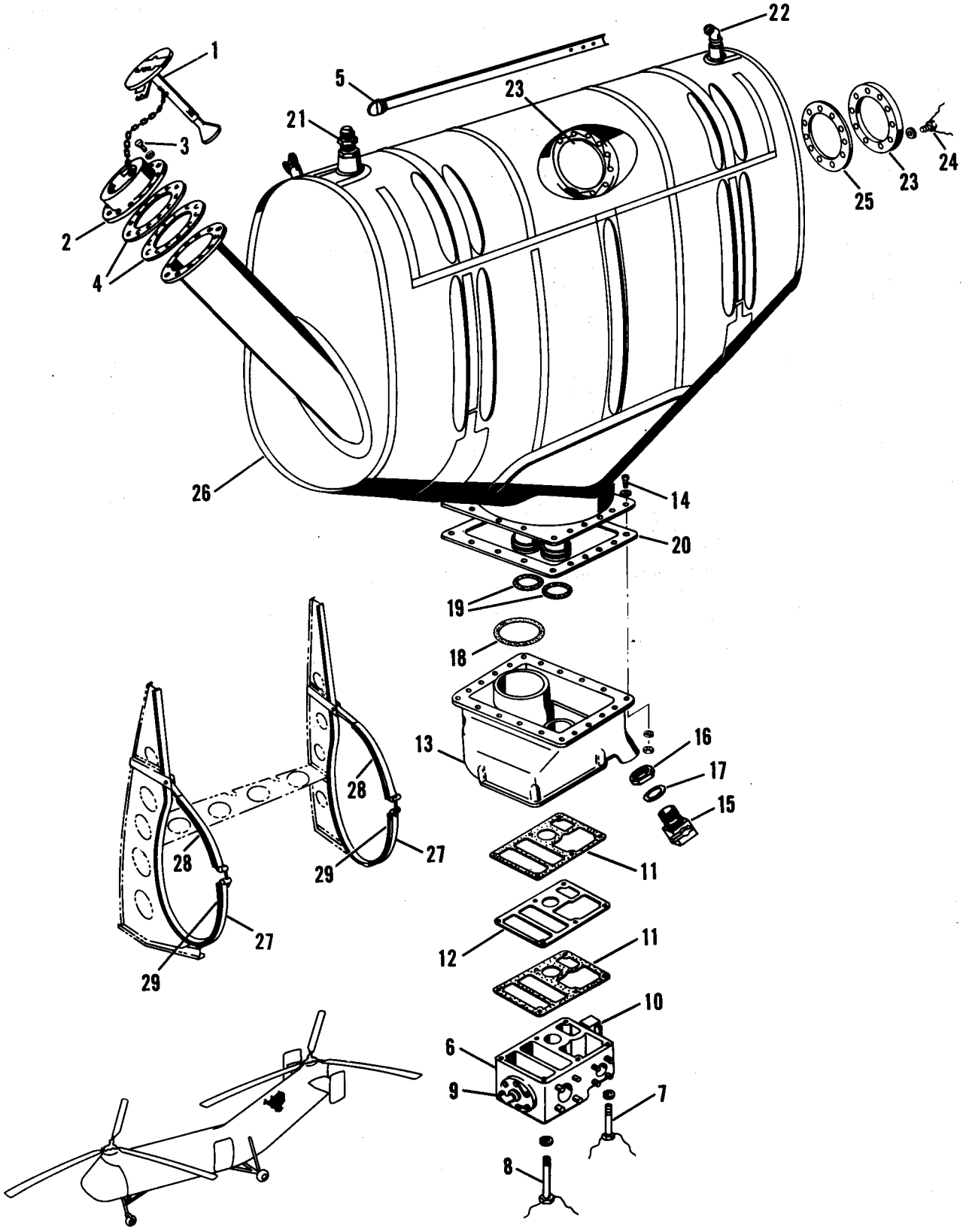

Figure 30. Oil Tank, YH-21 and H-21A

Figure and Index Number	Part Number	Description 1 2 3 4 5 6 7	Units per Assembly	Usable On Code
30-	22P9000-1	TANK ASSEMBLY, Power plant oil	1	A
	22P3003-250	TANK ASSEMBLY, Power plant oil	1	E
-1	22P3070-1	. CAP ASSEMBLY, Oil tank filler neck	1	A
	39B5435	. CAP ASSEMBLY, Oil tank filler neck (USAF dwg No.)	1	B
-2	AN4123-2	. ADAPTER	1	J
		Attaching Parts		
-3	AN4-7A	. BOLT	12	
	AN960-416	. WASHER	12	
	AN960-416L	. WASHER	12	
		———*———		
-4	22S3069-1	. GASKET	2	J
	22P3081-1	. VALVE ASSEMBLY	1	E
	22P3087-1	. . GASKET	1	E
-5	22P3011-1	. DIPSTICK ASSEMBLY	1	J
	MS29513-113	. . GASKET	1	J
-6	U-5410-5D	. VALVE, Diverter-segregator (UA)	1	J
		Attaching Parts		
-7	AN5H42A	. BOLT	2	J
-8	AN5H47A	. BOLT	4	J
	AN960-516	. WASHER	6	
	AN995F41	. WIRE, Lock	AR	
		———*———		
-9	AN833-4	. ELBOW	1	J
	AN924-4	. NUT	1	J
	MS29512-4	. GASKET	1	J
-10	8051-2	. VALVE, Drain (KOE)	1	
	AN924-6	. NUT	1	
	MS29512-6	. GASKET	1	
-11	22P3099-1	. GASKET	2	J
-12	22P3100-1	. PLATE	1	J
-13	U-512301	. SUMP ASSEMBLY, Oil tank (UA)	1	A
	U-512661-1	. SUMP ASSEMBLY, Oil tank (UA)	1	
		Attaching Parts		
-14	AN3-6A	. BOLT	20	
	AN363-1032	. NUT	20	
	AN960-10L	. WASHER	20	
	AN960D10	. WASHER	20	
		———*———		
-15	35951-2	. VALVE, Drain (KOE)	1	J
-16	AN924-12D	. NUT	1	J
-17	MS29512-12	. GASKET	1	J
-18	AN123892	. SEAL, "O" ring	1	J
-19	15P3053-1	. SEAL	2	J
-20	15P3050-3	. GASKET	1	J
-21	AN832-12D	. UNION	1	J
	AN924-12D	. NUT	1	J
	MS29512-12	. GASKET	1	J
-22	AN837-12D	. ELBOW	1	J
	AN924-12D	. NUT	1	J
	MS29512-12	. GASKET	1	J
-23	15P3052-1	. COVER	2	J
		Attaching Parts		
-24	AN3H3A	. BOLT	10	J
	AN960-10	. WASHER	10	J
	AN995F41	. WIRE, Lock	AR	
		———*———		
-25	15P3050-6	. GASKET	2	J
-26	22P3003-126	. TANK, Power plant oil	1	A
	22P3003-151	. TANK, Power plant oil	1	E
	22S3005-2	SUPPORT INSTALLATION, Oil tank	1	J
-27	15662	. STRAP (MAR)	2	J

Figure and Index Number	Part Number	1 2 3 4 5 6 7 Description	Units per Assembly	Usable On Code
30-		*Attaching Parts*		
	AN394-41	. PIN, Flat hd	1	J
	AN394-39	. PIN, Flat hd	1	J
	AN381-2-8	. PIN, Cotter	2	J
		———*———		
-28	NAS188-3A-142	. PAD	2	J
-29	NAS188-3A-090	. PAD	2	J
	22S3005-74	. PAD	1	J
	22S3005-75	. PAD	1	J

Power Plant

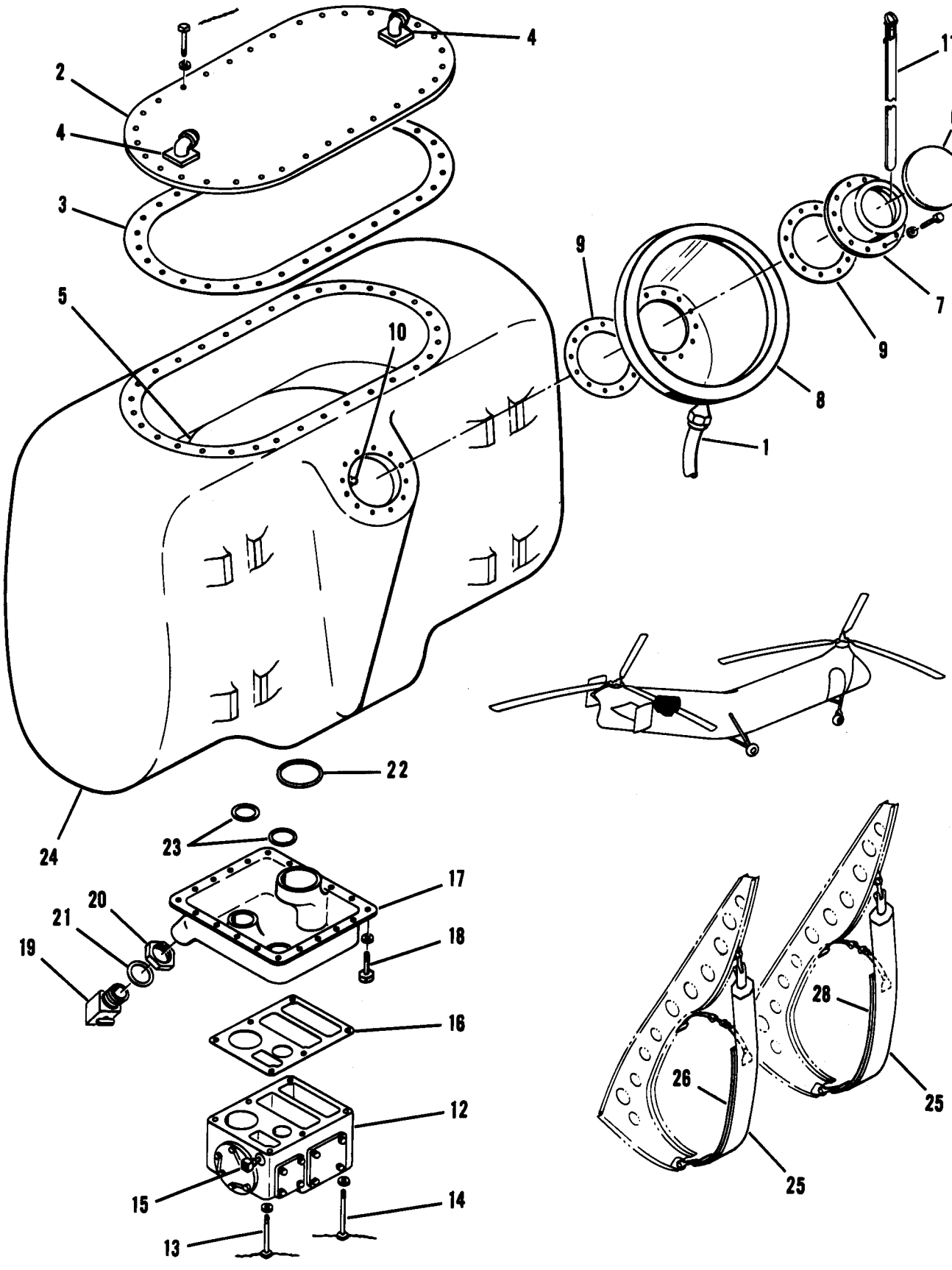

Figure 30A. Oil Tank, H-21B and H-21C

Figure and Index Number	Part Number	Description 1 2 3 4 5 6 7	Units per Assembly	Usable On Code
30A-	42P3007-1	TANK INSTALLATION, Power plant oil	1	HJ
	42P3002-1	TANK INSTALLATION, Power plant oil	1	HI
-1	42P3007-2	. HOSE ASSEMBLY, Scupper drain	1	HJ
	42P3002-2	. HOSE ASSEMBLY, Scupper drain	1	HI
	42P3003-1	. TANK ASSEMBLY, Power plant oil	1	HJ
	42P3013-1	. TANK ASSEMBLY, Power plant oil	1	HI
-2	42P3010-1	. . PLATE, Cover	1	AU
		Attaching Parts		
	AN502-416-8	. . SCREW	32	AU
	AN960A416L	. . WASHER	32	AU
		———*———		
-3	42P3011-1	. . GASKET	1	AU
-4	AN761D12	. . ELBOW	2	AU
	AN756D12	. . FLANGE	1	AU
		Attaching Parts		
	AN525-10R14	. . SCREW	4	AU
	22A5-02	. . NUT, Anchor (EN)	4	AU
	AN960D10L	. . WASHER	4	AU
	AN960D10	. . WASHER	4	AU
	200-3/16	. . WASHER, Lock (WFRC)	4	AU
		———*———		
	42P3015-1	. . GASKET	2	AU
-5	U-513600	. . HOPPER ASSEMBLY (UA)	1	HJ
	U-513600-2	. . HOPPER ASSEMBLY (UA)	1	HI
-6	39B5435	. . CAP ASSEMBLY (USAF dwg No.)	1	B
-7	AN4123-2	. . ADAPTER	1	
		Attaching Parts		
	AN502-416-10	. . SCREW	12	AU
	AN960A416L	. . WASHER	12	AU
		———*———		
-8	42P3009-1	. . SCUPPER ASSEMBLY	1	AU
-9	42P3021-1	. . GASKET	2	AU
	42P3008-1	. . SPRING	1	BW
-10	42P3020-1	. . FILLER NECK ASSEMBLY	1	BW
	U-513738	. . FILLER NECK ASSEMBLY (UA)	1	AU
-11	42P3019-2	. . DIPSTICK ASSEMBLY	1	AU
-12	U-5410-4D	. . VALVE, Diverter-segregator (UA)	1	AU
		Attaching Parts		
-13	AN5H36A	. . BOLT	2	AU
-14	AN5H43A	. . BOLT	4	AU
	AN960PD516	. . WASHER	6	AU
		———*———		
-15	49F9798-65	. . VALVE, Drain (USAF dwg No.)	1	AU
	AN924-6D	. . NUT	1	
	MS29512-6	. . GASKET	1	
-16	U-512575	. . GASKET (UA)	1	AU
-17	U-512661	. . SUMP ASSEMBLY (UA)	1	B
		Attaching Parts		
-18	AN502-416-8	. . SCREW	20	AU
	AN960A416L	. . WASHER	20	AU
		———*———		
-19	35951-2	. . VALVE, Drain (KOE)	1	
-20	AN924-12D	. . NUT	1	
-21	MS29512-12	. . GASKET	1	
-22	AN123892	. . SEAL, "O" ring	1	
-23	AN123878	. . SEAL, "O" ring	2	AU
	42P3004-1	. . CELL ASSEMBLY	1	HJ
	42P3031-1	. . CELL ASSEMBLY	1	HI
-24	2F1-6-16049	. . . CELL (GY)	1	HJ
	2F1-6-22720	. . . CELL (GY)	1	HI
	42P3004-53	. . . TUBE SUPPORT ASSY, Upper	1	HJ
	42P3004-51	. . . TUBE SUPPORT ASSY, Lower	1	HJ
	42P3031-53	. . . TUBE SUPPORT ASSY, Upper	1	HI

Figure and Index Number	Part Number	1 2 3 4 5 6 7 Description	Units per Assembly	Usable On Code
30A-	42P3031-51	. . . TUBE SUPPORT ASSY, Lower	1	HI
		Attaching Parts		
	AN4-5A	. . . BOLT	1	AU
	AN365-428C	. . . NUT	1	AU
	AN230B10	. . . GROMMET	2	AU
		***		
	42S3005-1	SUPPORT INSTALLATION, Oil tank	1	AU
-25	42S3008-1	. STRAP ASSEMBLY	2	HJ
	42S3082-1	. STRAP ASSEMBLY	2	HI
		Attaching Parts		
	AN4-10A	. BOLT	2	HJ
	AN365-428	. NUT	2	HJ
	AN960-416	. WASHER	4	HJ
	AN397-111	. PIN	2	HI
	AN381-3-12	. PIN, Cotter	2	HI
	AN960-616	. WASHER	4	HI
		***		
-26	42S3325-1	. PAD	2	AU

Power Plant

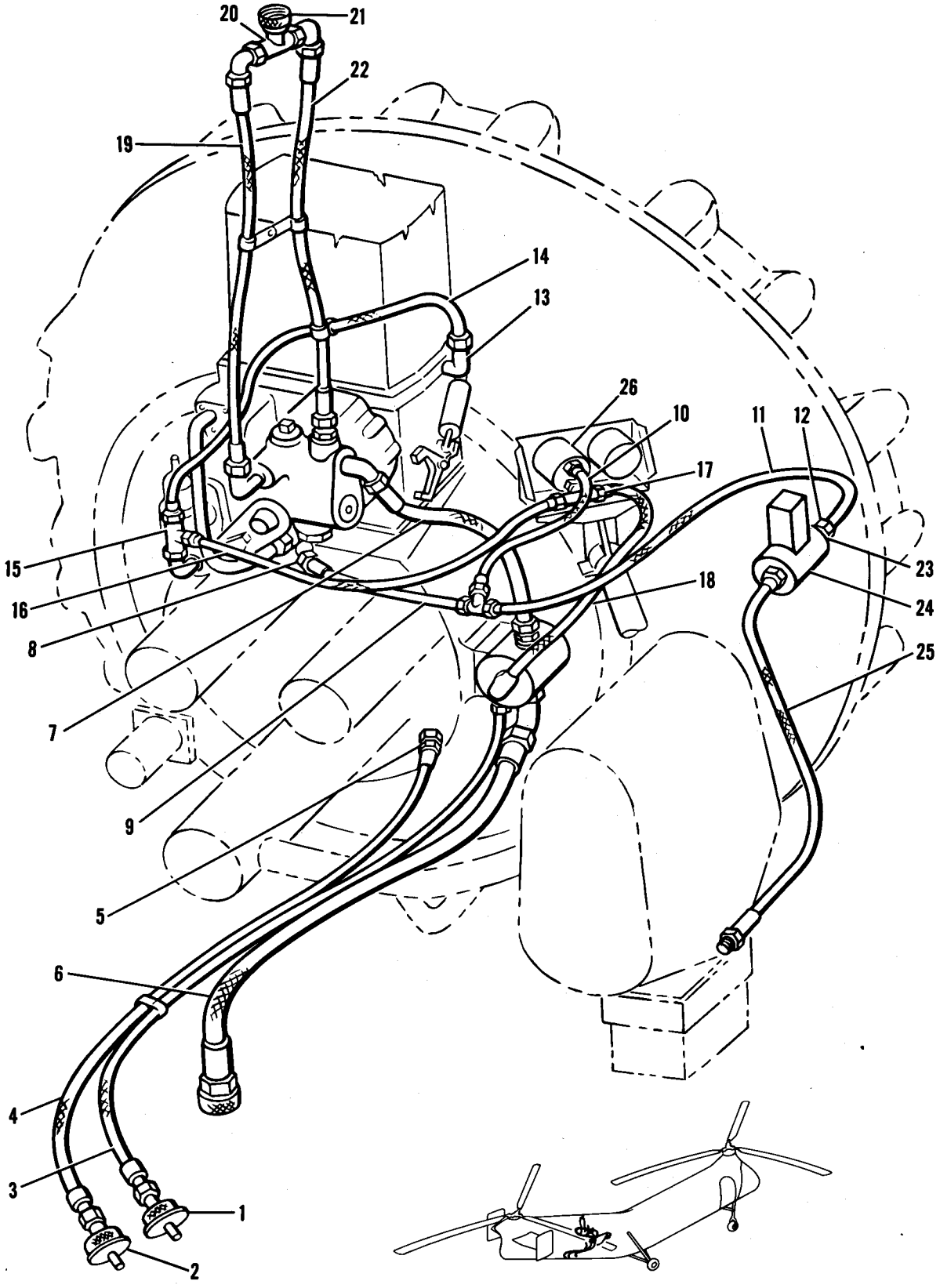

Figure 31. Demountable Fuel System

Figure and Index Number	Part Number	Description 1 2 3 4 5 6 7	Units per Assembly	Usable On Code
31-	22P4021-1	FUEL SYSTEM, Demountable	1	
	8-112	. NIPPLE (WIG)	1	
	X8-161	. NIPPLE (WIG)	1	
-1	8-101A	. SOCKET (WIG)	1	
	8-101-12A	. . SEAL (WIG)	1	
-2	8-151A	. SOCKET (WIG)	1	
	8-201-12A	. . SEAL (WIG)	1	
-3	MS28741-4-0414	. HOSE ASSEMBLY	1	
-4	MS28741-6-0384	. HOSE ASSEMBLY	1	
	AN816-4	. NIPPLE, Fuel pump seal drain	1	
-5	AN816-6	. NIPPLE, Supercharger drain	1	
-6	MS28741-16-0276	. HOSE ASSEMBLY, Keel to pump	1	
	AN823-16-12	. ELBOW	1	
	AN816-16-12	. NIPPLE	1	
-7	MS28741-16-0194	. HOSE ASSEMBLY, Pump to carburetor	1	
	AN822-16-12	. ELBOW	1	
-8	22P4024-1	. RESTRICTOR	1	
-9	MS28741-4-0126	. HOSE ASSEMBLY, Carburetor to press. line tee	1	
	MS29512-4	. GASKET	1	
	AN924-4	. NUT	1	
	AN804-4	. TEE	1	
-10	MS28741-4-0070	. HOSE ASSEMBLY, Transmitter to restrictor tee	1	
	22P4022-1	. TEE, Restrictor	1	
	or			
	22P4022-2	. TEE, Restrictor	1	
-11	MS28741-4-0170	. HOSE ASSEMBLY, Transmitter tee to socket	1	
-12	8-101A	. SOCKET (WIG)	1	
	8-101-12A	. . SEAL (WIG)	1	
	MS29512-4	. PACKING, "O" ring	1	
	AN924-4	. NUT	1	
-13	AN822-4	. ELBOW	1	
-14	MS28741-4-0200	. HOSE ASSEMBLY	1	
-15	AN826-4	. TEE	1	
	AN914-1	. ELBOW	1	
-16	MS28741-4-0180	. HOSE ASSEMBLY	1	
-17	AN834-4	. TEE	1	
	MS29512-4	. GASKET	1	
	AN924-4	. NUT	1	
■ -18	MS28741-4-0224	. HOSE ASSEMBLY, Pump to transmitter	1	
	AN823-4	. ELBOW	1	
	AN822-6-2	. ELBOW	1	
-19	MS28741-6-0184	. HOSE ASSEMBLY, Unmetered fuel chamber	1	
	AN833-6	. ELBOW	1	
	AN924-6	. NUT	1	
	MS29512-6	. GASKET	1	
-20	AN938-6	. TEE	1	
	MS29512-6	. GASKET	1	
-21	6-270A	. SOCKET (WIG)	1	
	6-220-12	. . SEAL, Large (WIG)	1	
	220-10	. . SEAL, Small (WIG)	1	
	AN924-6	. NUT	1	
	MS29512-6	. GASKET	1	
	AN833-6	. ELBOW	1	
-22	MS28741-6-0200	. HOSE ASSEMBLY, Fuel strainer chamber to carburetor	1	
	AN816-6-2	. NIPPLE	1	
	AN742D13C	. CLAMP	1	
	22P4021-3	DILUTION SYSTEM, Oil	1	
-23	8-110FL	. NIPPLE (WIG)	1	
		Attaching Parts		
	AN3-4A	. BOLT	3	
	AN365-1032	. NUT	3	

Figure and Index Number	Part Number	Description 1 2 3 4 5 6 7	Units per Assembly	Usable On Code
31-	AN960-10	. WASHER	3	
		———*———		
	AN924-4	. NUT	1	
	MS29512-4	. GASKET	1	
-24	U-9500	. VALVE, Oil dilution solenoid (UA)	1	
	AN837-4	. ELBOW	1	
	AN924-4	. NUT	1	
	MS29512-4	. GASKET	1	
-25	MS28741-4-0194	. HOSE ASSEMBLY, Oil dilution	1	
	MS21919DF9	. CLAMP	1	
	AN364-1032	. NUT	1	
	AN520-10R5	. SCREW	1	
	AN960C10	. WASHER	2	
-26	22E1179-1	TRANSMITTER INSTALLATION, Fuel, see fig. 76	Ref	

Power Plant

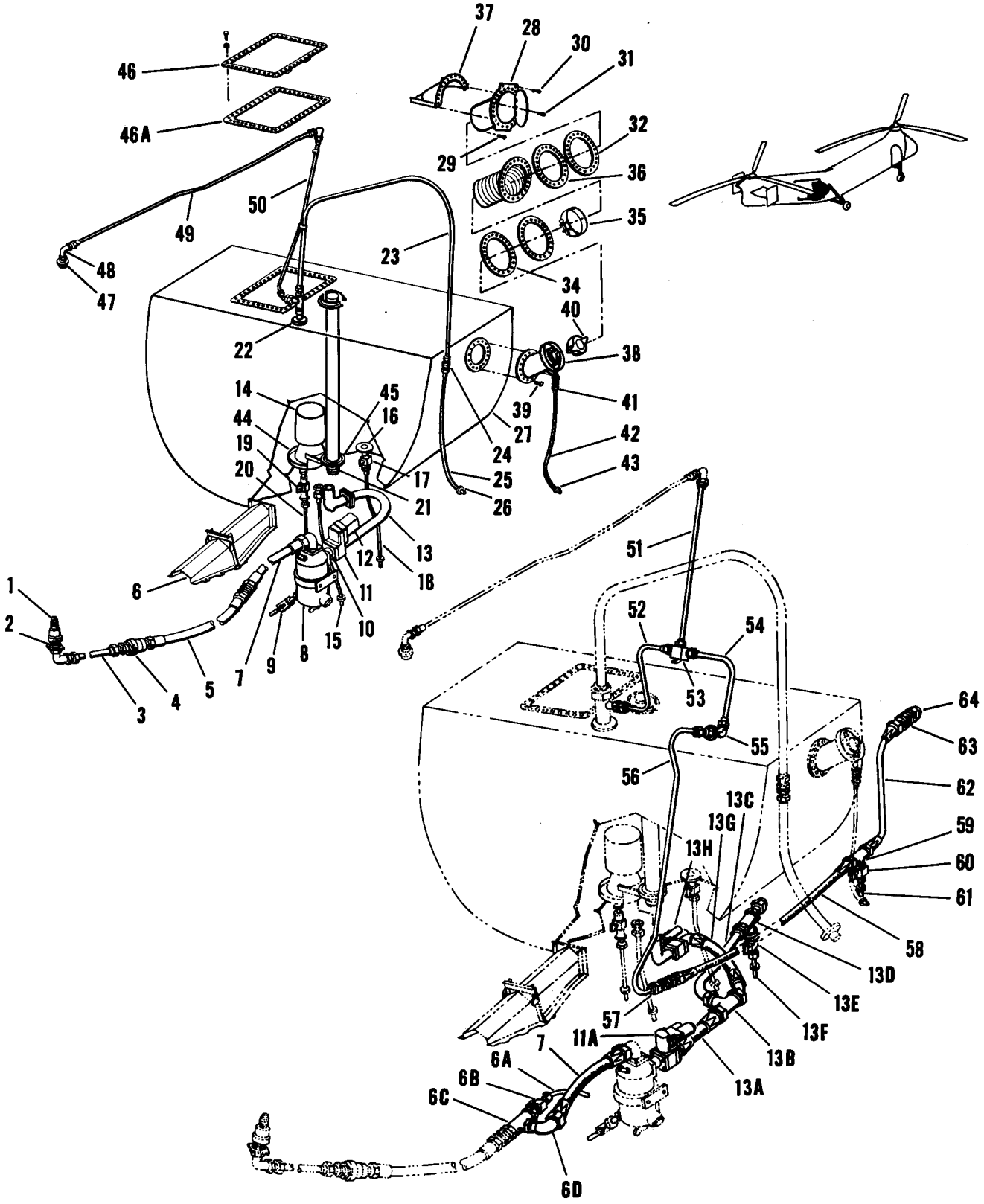

Figure 32. Fuselage Fuel System

Figure and Index Number	Part Number	Description 1 2 3 4 5 6 7	Units per Assembly	Usable On Code
32-	22P4001-3	FUEL SYSTEM, Fuselage	1	
-1	6-533A	. SOCKET (WIG)	1	
	6-550-12A	. . SEAL, Large (WIG)	1	
	550-10A	. . SEAL, Small (WIG)	1	
	6-585A	. NIPPLE (WIG)	1	
-2	22P4043-1	. FITTING, Fuel system quick-disconnect	2	
		Attaching Parts		
	AN501-10-12	. SCREW	4	
	AN960D10	. WASHER	4	
		———*———		
	320-562-2.375-S	. CLAMP (MAR)	1	
	22P4044-1	. PLATE, Seal	2	
	AN924-16D	. NUT	1	
	MS29512-16	. GASKET	2	
	AN927-16D	. ELBOW	1	
	AN815-16D	. UNION	1	
-3	22P4045-9	. TUBE ASSEMBLY, Sta 509.250 to sta 450.810	1	
	AN735D16	. CLAMP	2	
	AN749-3-3	. JUMPER	1	
	AN742D18C	. CLAMP	2	
	AN749-3-5	. JUMPER	1	
	AN924-16D	. NUT	1	
	6-585A	. NIPPLE (WIG)	1	
	22P4001-1	FUEL SYSTEM, Fuselage	1	J,HJ
	22P4001-11	FUEL SYSTEM, Fuselage	1	HI
-4	6-533A	. SOCKET (WIG)	1	
	6-550-12A	. . SEAL, Large (WIG)	1	
	550-10A	. . SEAL, Small (WIG)	1	
-5	MS28741-16-0380	. HOSE ASSEMBLY, Sta 450.810 to sta 407.830	1	AR,DV
	MS28741-16-0374	. HOSE ASSEMBLY, Sta 450.810 to sta 407.830	1	FO,EH
-6	22S3147-1	. COVER INSTALLATION, Fuel line guard	1	AR,DV
	AN832-16D	. UNION	1	
	AN924-16D	. NUT	1	
-6A	22P4001-5	. TUBE	1	FO,EH
	AN737RM22	. CLAMP	1	FO,EH
-6B	49F9798-55	. VALVE, Drain (USAF dwg No.)	1	FO,EH
	AN924-4D	. NUT	1	FO,EH
	MS29512-4	. GASKET	1	FO,EH
	AN893-5D	. BUSHING	1	FO,EH
-6C	AN938D16	. TEE	1	FO,EH
	AN924-16D	. NUT	1	FO,EH
	MS29512-16	. GASKET	1	FO,EH
-6D	AN833-16D	. ELBOW	1	FO,EH
-7	MS28741-16-0112	. HOSE ASSEMBLY, Sta 407.830 to strainer	1	
	AN762D16	. ELBOW	1	
	AN756D16	. FLANGE	1	
		Attaching Parts		
	AN365-1032	. NUT	4	
	AN960D10	. WASHER	4	
		———*———		
	AN763-16	. GASKET	1	
▌ -8	U-959	. STRAINER (UA)	1	
		Attaching Parts		
	AN4-5A	. BOLT	2	
	AN960D416	. WASHER	2	
		———*———		
	AN924-4D	. NUT	1	
	MS29512-4	. GASKET	1	

Figure and Index Number	Part Number	Description 1 2 3 4 5 6 7	Units per Assembly	Usable On Code
32-9	49F9798-55	. VALVE, Drain (USAF dwg No.)	1	
	or			
	7901-1	. VALVE, Drain (KOE)	1	
	AN814-4D	. PLUG	1	A,AZ
	AN814-4DL	. PLUG	1	BA
	MS29512-4	. GASKET	1	
	AN763-16	. GASKET	1	
-10	22P4042-1	. ADAPTER	1	
		Attaching Parts		
	AN365-1032	. NUT	4	
	AN960D10	. WASHER	4	
		———*———		
	AN763-16	. GASKET	1	
-11	WE484-1D	. VALVE, Motor slide (WTR)	1	J,AV
	42P4042-1	. VALVE	1	HK
	or			
	107035	. VALVE (WTR)	1	HK
-11A	AV16B-1229B	. VALVE, Gate (GCO)	1	HI
		Attaching Parts		
	AN3H3A	. BOLT	4	
	AN960D10	. WASHER	8	J,HJ
	AN960D10	. WASHER	4	HI
	AN995F41	. WIRE, Lock	AR	J,HJ
	AN995F32	. WIRE, Lock	AR	HI
		———*———		
	AN763-16	. GASKET	1	
-12	AN760D16	. CONNECTOR	1	J,HJ
		Attaching Parts		
	AN3H4A	. BOLT	4	
	AN960D10	. WASHER	8	J,HJ
	AN960D10	. WASHER	4	HI
	AN995F41	. WIRE, Lock	AR	J,HJ
	AN995F32	. WIRE, Lock	AR	HI
		———*———		
-13	MS28741-16-0120	. HOSE ASSEMBLY, Strainer to booster	1	J,HJ
	AN762D16	. ELBOW	1	J,HJ
	AN756D16	. FLANGE	1	J,HJ
	AN763-16	. GASKET	1	J,HJ
	AN3-10A	. BOLT	4	J,HJ
	AN365-1032	. NUT	4	J,HJ
	AN960D10	. WASHER	8	J,HJ
-13A	22P4045-412	. TUBE ASSEMBLY, Strainer to booster	1	HI
-13B	AN824-16D	. TEE	1	HI
-13C	22P4045-408	. TUBE ASSEMBLY	1	HI
-13D	AN938D16	. TEE	1	HI
	42P4045-1	. FITTING	1	HI
	MS29512-16	. GASKET	1	HI
-13E	49F9798-43	. VALVE, Drain (USAF dwg No.)	1	HI
-13F	22P4045-414	. TUBE ASSEMBLY	1	HI
	AN815-16D	. UNION	1	HI
	MS29512-16	. GASKET	1	HI
	111-568713	. VALVE, Check (PAET)	1	HI
	AN960PD2116L	. WASHER	1	HI
	AN924-16D	. NUT	1	HI
	AN929-16	. CAP ASSEMBLY	1	HI
-13G	22P4001-12	. HOSE ASSEMBLY	1	HI
	8846-16D	. FITTING (AQ)	1	HI

Figure and Index Number	Part Number	Description 1 2 3 4 5 6 7	Units per Assembly	Usable On Code
32-	8890-16D	. FITTING (AQ)	1	HI
-13H	AV16B-1229	. VALVE, Gate (GCO)	1	HI
	AN763-16	. GASKET	2	HI
	AN3H4A	. BOLT	8	HI
	AN960D10	. WASHER	8	HI
	AN995F32	. WIRE, Lock	AR	HI
-14	TF51200-10	. PUMP, Booster (TP)	1	ED
	122637-200-02	. PUMP, Booster (PE)	1	DU
		Attaching Parts		
	AN507-1024R6	. SCREW	3	J
	AN507-1032-R6	. SCREW	3	AU
	AN74-7	. BOLT	12	
	AN960D416	. WASHER	12	
	NEC-GRA4X6-12T24	. FITTING (NEUS)	1	
	22S3004-3	. WIRE, Lock	AR	J
	AN995F91	. WIRE, Lock	AR	AU
		———*———		
	2F1-4-13343-14	. GASKET (GY)	4	J
	2F1-3-14814	. GASKET (GY)	4	AU
	AN815-4D	. UNION	1	
	MS29512-4	. GASKET	1	
▮ -15	22P4045-416	. TUBE ASSEMBLY, Fuel pump drain line	1	
	AN931-4-7	. GROMMET	1	
-16	22P4041-1	. FITTING, Fuel tank sump drain	1	
		Attaching Parts		
	AN507-1024R6	. SCREW	2	
	AN74-6	. BOLT	4	
	AN960D416	. WASHER	4	
	NEC-GRA162-4T24	. FITTING (NEUS)	1	
	22S3004-3	. WIRE, Lock	AR	J
	AN995F41	. WIRE, Lock	AR	AU
		———*———		
	2F1-4-13343-1	. GASKET (GY)	3	J
	2F1-1-14801	. GASKET (GY)	3	AU
	MS29512-4	. GASKET	1	
-17	49F9798-31	. VALVE, Drain (USAF dwg No.)	1	
	or			
	7501-1	. VALVE, Drain (KOE)	1	
-18	22P4045-13	. TUBE ASSEMBLY, Tank sump drain line	1	
	AN931-4-7	. GROMMET	1	
	AN924-4D	. NUT	1	
	MS29512-4	. GASKET	1	
-19	49F9798-58	. VALVE, Drain (USAF dwg No.)	1	
	or			
	8101-1	. VALVE, Drain (KOE)	1	
	AN815-4D	. UNION	1	
	MS29512-4	. GASKET	1	
-20	22P4045-401	. TUBE ASSEMBLY, Booster pump water drain line	1	J,ED
	22P4045-410	. TUBE ASSEMBLY, Booster pump water drain line	1	HI
-21	165-010-192	. TANK UNIT (AVEN)	1	J,HJ
	FG102B-13	. TANK UNIT (MHA)	1	HI
		Attaching Parts		
	AN507-1024R6	. SCREW	4	
	AN74-10	. BOLT	1	
	AN74-6	. BOLT	8	
	AN960D416	. WASHER	10	
	NEC-GRA350-8T24	. FITTING (NEUS)	1	
	22S3004-3	. WIRE, Lock	AR	J

Figure and Index Number	Part Number	Description 1 2 3 4 5 6 7	Units per Assembly	Usable On Code
32-	AN995F41	. WIRE, Lock	AR	AU
		———*———		
	2F1-4-13343-5	. GASKET	3	J
	2F1-2-14805	. GASKET	4	AU
	22P4002-1	VENT INSTALLATION, Fuel system	1	J,CS
	22P4002-2	VENT INSTALLATION, Fuel system	1	CT
-22	22P4040-1	. ADAPTER	1	J,CS
	42P4041-1	. FITTING	1	CT
		Attaching Parts		
	AN507-1024R6	. SCREW	2	
	AN74-6	. BOLT	6	
	AN960D416	. WASHER	6	
	NEC-GRA200-6T24	. FITTING (NEUS)	1	
	22S3004-3	. WIRE, Lock	AR	J
	AN995F41	. WIRE, Lock	AR	AU
		———*———		
	2F1-4-13343-2	. GASKET (GY)	3	J
	2F1-1-14802	. GASKET (GY)	3	AU
	AN123977	. SEAL, "O" ring	1	J,CS
	AN924-16D	. NUT	1	J,CS
	AN783D16	. TEE	1	J,CS
	AN123977	. SEAL, "O" ring	1	J,CS
	AN893-14D	. BUSHING (For vapor return line)	1	J,CS
-23	22P4045-1	. TUBE ASSEMBLY, Tank to vapor shield	1	J,CS
	22P4045-405	. TUBE ASSEMBLY, Tank to vapor shield	1	CT
-24	AN832-16D	. UNION	1	
	AN924-16D	. NUT	1	
	AN960PD2116	. WASHER	1	
-25	22P4045-5	. TUBE ASSEMBLY, Vapor shield to drain	1	
-26	AN931-16S22	. GROMMET	1	
	22S3004-1	CELL INSTALLATION, Fuel	1	A
	22S3004-5	CELL INSTALLATION, Fuel	1	E
	42S3004-1	CELL INSTALLATION, Fuel	1	AU
-27	2F1-6-13030	. CELL, Fuel (GY)	1	J
	2F1-6-16048	. CELL, Fuel (GY)	1	AU
	22S3105-1	. FILLER NECK INSTALLATION	1	J
	42S3105-1	. FILLER NECK INSTALLATION	1	AV
	42S3105-4	. FILLER NECK INSTALLATION	1	I
-28	22S3117-1	. . GUARD AND DOOR ASSEMBLY	1	J
	42S3117-1	. . GUARD AND DOOR ASSEMBLY	1	AU
		Attaching Parts		
-29	AN525-10R10	. . SCREW	21	
-30	AN525-10R8	. . SCREW	4	
-31	AN531-8R14	. . SCREW	3	J
	AN531-8R10	. . SCREW	1	AU
	AN960D10	. . WASHER	21	
	AN960D10L	. . WASHER	4	
		———*———		
	22S3117-9	. . . DOOR	1	J
	42S3117-9	. . . DOOR	1	ED
	42S3117-14	. . . DOOR	1	DU
		Attaching Parts		
	22S8031-1	. . . SPRING	1	
■	42S3117-15	. . . PIN, Hinge	1	
		———*———		
-32	22S3118-1	. . DOUBLER	1	
-33	22S3116-1	. . SLEEVE ASSEMBLY, Filler neck	1	
	22S3116-3	. . . SLEEVE	1	
-34	22S3116-5	. . . GASKET	1	
-35	22S3105-3	. . CLAMP, Universal	1	J

Figure and Index Number	Part Number	Description 1 2 3 4 5 6 7	Units per Assembly	Usable On Code
32-	42S3105-3	. . CLAMP, Universal	1	AU
-36	22S3113-21	. . GASKET	1	J
	42S3113-21	. . GASKET	1	AU
-37	22S3113-3	. . DOOR ASSEMBLY	1	J
	42S3113-3	. . DOOR ASSEMBLY	1	AU
-38	22S3119-1	. . FILLER NECK ASSEMBLY	1	J,CS
	42S3105-5	. . FILLER NECK ASSEMBLY	1	CT
		Attaching Parts		
-39	AN507-1024R6	. . SCREW	4	
	AN74-4	. . BOLT	16	
	AN960D416	. . WASHER	16	
	NEC-GRA725-16T24	. . FITTING (NEUS)	1	
	AN995F41	. . WIRE, Lock	AR	
		———*———		
-40	39B5435	. . . CAP (USAF dwg No.)	1	A
	22P4023-10	. . . CAP	1	B
	22S3119-7	. . . ADAPTER	1	J,CS
	42S3105-12	. . . ADAPTER	1	CT
	22S3119-15	. . . GASKET	1	J,CS
	42S3105-9	. . . GASKET	1	CT
	42S3105-10	. . . GASKET	1	CT
	42S3105-11	. . . GASKET	1	CT
	2F1-4-13343-11	. . GASKET	3	J
	2F1-3-14811	. . GASKET	3	AU
-41	AN815-8	. . UNION	1	
-42	22P4045-21	. . TUBE ASSEMBLY	1	
	AN742D8	. . CLAMP	1	
-43	AN931-8-13	. . GROMMET	1	
-44	22S3123-1	. CHAMBER, Boost pump	1	
-45	22S3124-1	. SUPPORT ASSEMBLY, Fuel gage	1	J,AV
	42S3124-1	. SUPPORT ASSEMBLY, Fuel gage	1	HK
	42S3124-6	. SUPPORT ASSEMBLY, Fuel gage	1	HI
-46	22S3106-1	. DOOR ASSEMBLY, Access	1	J
	22S3106-13	. DOOR ASSEMBLY, Access	1	AV
	42S3106-1	. DOOR ASSEMBLY, Access	1	I
		Attaching Parts		
	AN507-1024R6	. SCREW	1	
	AN74-5	. BOLT	48	J
	AN74-7	. BOLT	48	AU
	NEC-GRA12X18-48T24	. FITTING (NEUS)	1	
		———*———		
-46A	2F1-2-13702	. GASKET (GY)	3	J
	2F1-2-12394	. GASKET (GY)	3	AU
	22P4021-2	RETURN LINE INSTALLATION, Fuselage vapor	1	J,CS
	22P4021-7	RETURN LINE INSTALLATION, Fuselage vapor	1	FV,HY
	22P4021-13	RETURN LINE INSTALLATION, Fuselage vapor	1	HI
-47	6-272FL-A	. NIPPLE (WIG)	1	
		Attaching Parts		
	AN3-4A	. BOLT	3	
	AN365-1032	. NUT	3	
	AN960-10	. WASHER	3	
		———*———		
	AN924-6	. NUT	1	
	MS29512-6	. GASKET	1	
■ -48	AN939-6	. ELBOW	1	
	AN815-6	. UNION	1	
	MS29513-11	. GASKET	1	
-49	22P4021-4	. TUBE ASSEMBLY, Vapor return sta 519.000 to sta 407.830	1	A
	22P4021-6	. TUBE ASSEMBLY, Vapor return sta 519.000 to sta 407.830	1	B

Figure and Index Number	Part Number	Description 1 2 3 4 5 6 7	Units per Assembly	Usable On Code
32-	AN735-6	. CLAMP	2	
	AN924-6	. NUT	1	
	AN833-6	. ELBOW	1	
	AN960-916	. WASHER	1	
-50	22P4021-5	. TUBE ASSEMBLY, Vapor return to vent	1	J,CS
	22P4021-11	. TUBE ASSEMBLY, Vapor return to vent	1	FV,HY
-51	22P4021-14	. TUBE ASSEMBLY, Vapor return to vent	1	HI
-52	22P4021-15	. TUBE ASSEMBLY	1	HI
	AN735-6D	. CLAMP	1	
	AN815-6	. UNION	1	
	MS29512-6	. GASKET	1	
-53	1311-563017	. VALVE, Fuel selector (PA)	1	HI
-54	22P4021-16	. TUBE ASSEMBLY	1	HI
-55	AN833-8	. ELBOW	1	HI
	AN924-8	. NUT	1	HI
	AN960-1216	. WASHER	1	HI
-56	22P4021-17	. TUBE ASSEMBLY	1	HI
-57	AN832-8	. UNION	1	HI
	AN924-8D	. NUT	1	HI
	AN960D1216	. WASHER	1	HI
-58	22P4021-25	. HOSE ASSEMBLY, Sta 407.830 to sta 377.560	1	HI
-59	AN783D3	. TEE	1	HI
	42P4045-1	. FITTING	1	HI
	MS29512-8	. SEAL	1	HI
-60	49F9798-43	. VALVE, Drain (USAF dwg No.)	1	HI
-61	22P4021-18	. TUBE ASSEMBLY	1	HI
	AN931-4-7	. GROMMET	1	HI
-62	22P4021-26	. HOSE ASSEMBLY	1	HI
-63	AN832-8D	. UNION	1	HI
	AN924-8D	. NUT	1	HI
	AN960D1216	. WASHER	1	HI
-64	AN929-8D	. CAP ASSEMBLY	1	HI

Figure and Index Number	Part Number	Description 1 2 3 4 5 6 7	Units per Assembly	Usable On Code
32A-	42P4016-1	AUXILIARY FUEL INSTALLATION	1	HJ
	42P4209-11	. FERRY FUEL SYSTEM INSTALLATION	1	HJ
-1	42P4210-1	. . VALVE, Float level control	1	HJ
	1321-517307	. . VALVE, Float level control (PA) (alternate)	1	HJ
	AN763-24	. . GASKET	1	HJ
	AN760D24	. . CONNECTOR	1	HJ
-2	MS28741-24-0410	. . HOSE ASSEMBLY	1	HJ
	AN919-27D	. . REDUCER	1	HJ
	42P4008-1	. . FITTING	1	HJ
	AN924-16D	. . NUT	1	HJ
	MS29512-16	. . GASKET	2	HJ
-3	AN833-16D	. . ELBOW	1	HJ
-4	42P4012-1	. . HOSE ASSEMBLY	1	HJ
-5	AN783D16	. . TEE	1	HJ
	42P4009-1	. . FITTING	1	HJ
	MS29512-16	. . GASKET	1	HJ
-6	49F9798-43	. . VALVE, Drain (USAF dwg No.)	1	HJ
-7	42P4011-1	. . TUBE ASSEMBLY, Drain	1	HJ
	AN931-4-7	. . GROMMET	1	HJ
	AN6289D16	. . NUT	1	HJ
	AN6291-16	. . RING	1	HJ
-8	MS28741-16-0230	. . HOSE ASSEMBLY	1	HJ
	AN6289D16	. . NUT	1	HJ
	AN6291-16	. . RING	1	HJ
-9	MS28741-16-0644	. . HOSE ASSEMBLY	1	HJ
	AN742D22C	. . CLAMP	1	HJ
-10	42P4212-1	. . VALVE, Selector	1	HJ
	1311-532405	. . VALVE, Selector (PA) (alternate)	1	HJ
	1311-522160	. . VALVE, Selector (PA) (alternate)	1	HJ
-11	42P4211-1	. . PUMP, Air	1	HJ
	1511-4	. . PUMP, Air (ECP) (alternate)	1	HJ
	MS29512-6	. . GASKET	2	HJ
	AN832-6D	. . UNION	1	HJ
	AN924-6D	. . NUT	1	HJ
-12	AN927-6D	. . ELBOW	1	HJ
	AN894D8-6	. . EXPANDER	1	HJ
	MS29512-6	. . GASKET	1	HJ
-13	1111-517703	. . VALVE, Check (PA)	1	HJ
	MS29512-8	. . GASKET	1	HJ
-14	42P4011-53	. . TUBE ASSEMBLY	1	IK
	42P4011-81	. . TUBE ASSEMBLY	1	IL
-15	AN824-8D	. . TEE	1	HJ
-16	42P4011-33	. . TUBE ASSEMBLY	1	IK
	42P4011-69	. . TUBE ASSEMBLY	1	IL
-17	AN833-8D	. . ELBOW	1	HJ
	AN924-8D	. . NUT	1	HJ
	MS29512-8	. . GASKET	1	HJ
	AN931-8S20	. . GROMMET	2	HJ
-18	42P4011-49	. . TUBE ASSEMBLY	1	IK
	42P4011-77	. . TUBE ASSEMBLY	1	IL
	AN924-8D	. . NUT	1	HJ
	AN960D1216	. . WASHER	1	HJ
	AN783D8	. . TEE	1	HJ
-19	42P4010-1	. . FITTING	1	HJ
	MS29512-8	. . GASKET	1	HJ
-20	7-750-85	. . VALVE, Pressure relief (PA)	1	HJ
	MS29513-212	. . GASKET	1	HJ
-21	42P4011-45	. . TUBE ASSEMBLY	1	HJ
-22	AN833-8D	. . ELBOW	1	HJ
	AN924-8D	. . NUT	1	HJ
	MS29512-8	. . GASKET	1	HJ
	AN735D8	. . CLAMP	2	HJ
	AN749-3-3	. . JUMPER	2	HJ
-23	MS28741-16-0146	. . HOSE ASSEMBLY	1	HJ
-24	AN762D16	. . ELBOW	1	HJ

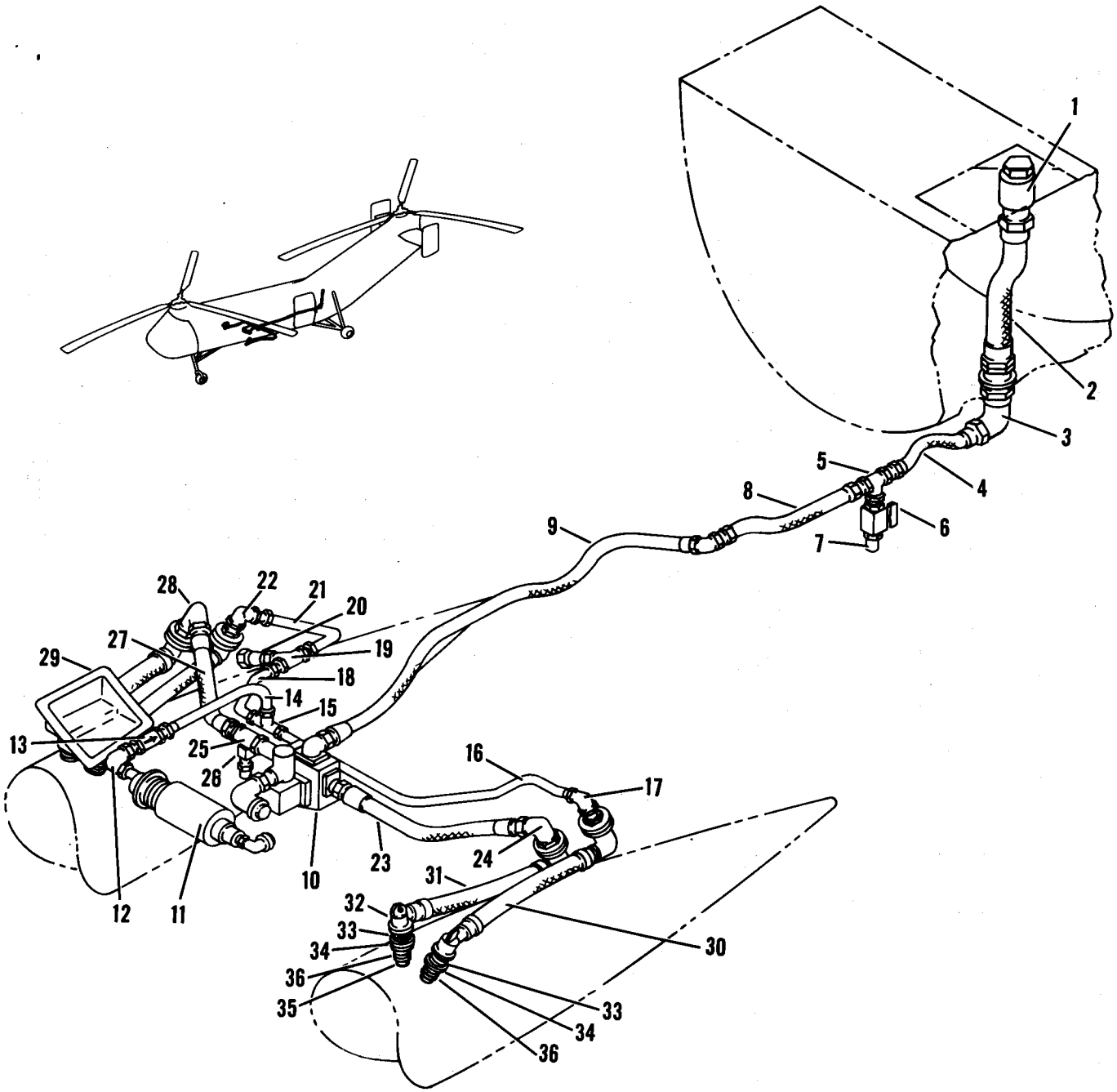

Figure 32A. Auxiliary Fuel System (Sheet 1 of 2)

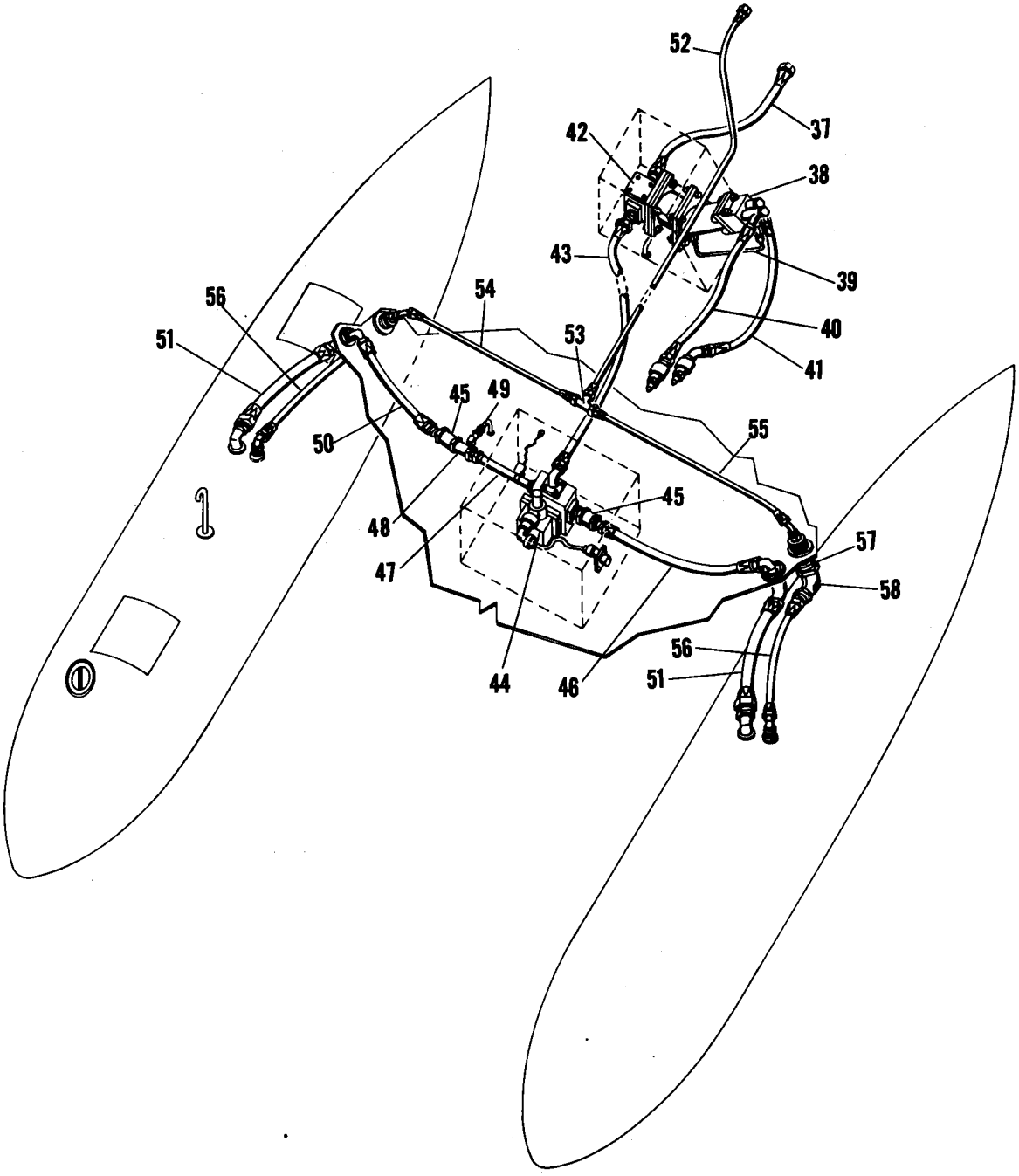

Figure 32A. Auxiliary Fuel System (Sheet 2 of 2)

Figure and Index Number	Part Number	Description 1 2 3 4 5 6 7	Units per Assembly	Usable On Code
32A-	AN756D16	. . FLANGE	1	HJ
		Attaching Parts		
	AN3H4A	. . BOLT	4	HJ
		———*———		
	AN763-16	. . GASKET	1	HJ
	42P4011-41	. . TUBE ASSEMBLY	1	AK,IK
	42P4011-73	. . TUBE ASSEMBLY	1	IL
	AN931-20S30	. . GROMMET	2	HJ
-25	42P4014-1	. . FITTING	1	HJ
	AN815-16D	. . UNION	2	HJ
	MS29512-16	. . GASKET	2	HJ
	AN924-4D	. . NUT	1	HJ
	MS29512-4	. . GASKET	1	HJ
-26	49F9798-58	. . VALVE, Drain (USAF dwg No.)	1	HJ
	AN815-4D	. . UNION	1	HJ
	MS29512-4	. . GASKET	1	HJ
	42P4011-37	. . TUBE ASSEMBLY	1	HJ
	AN931-4-7	. . GROMMET	1	HJ
-27	MS28741-16-0144	. . HOSE ASSEMBLY	1	HJ
-28	AN762D16	. . ELBOW	1	HJ
	AN756D16	. . FLANGE	1	HJ
		Attaching Parts		
	AN3H4A	. . BOLT	4	HJ
		———*———		
	AN763-16	. . GASKET	1	HJ
	42S3340-1	. . BRACKET, LH	1	HJ
-29	42S3340-2	. . BRACKET, RH	1	HJ
		Attaching Parts		
	AN525-10-9	. . SCREW	4	HJ
	AN960D10	. . WASHER	4	HJ
		———*———		
	AN763-12	. . GASKET	2	HJ
	AN759-12	. . ELBOW	2	HJ
	AN737-38	. . CLAMP	4	HJ
-30	42P4209-7	. . HOSE ASSEMBLY, Air	2	HJ
	42P4019-1	. . FITTING, Air Hose	2	HJ
		Attaching Parts		
	AN3-4A	. . BOLT	1	HJ
	AN365-1032	. . NUT	1	HJ
	AN960D10	. . WASHER	2	HJ
		———*———		
	AN763-16	. . GASKET	2	HJ
	AN759-16	. . ELBOW	2	HJ
	AN737-46	. . CLAMP	4	HJ
-31	42P4209-9	. . HOSE ASSEMBLY, Fuel	2	HJ
-32	42P4017-1	. . FITTING, Fuel hose LH	1	HJ
	42P4018-1	. . FITTING, Fuel hose RH	1	HJ
		Attaching Parts		
	AN3-4A	. . BOLT	1	HJ
	AN365-1032	. . NUT	1	HJ
	AN960D10	. . WASHER	2	HJ
		———*———		
-33	SP434893	. . SPRING (FAV)	4	HJ
-34	SP434892	. . COLLAR (FAV)	4	HJ
	MS29513-214	. . SEAL	4	HJ
-35	SP4348112	. . BUSHING (FAV) (Used with 42P4209-9)	2	HJ
-36	SP434829	. . NUT (FAV)	4	HJ
	42P4003-1	EXTERNAL FUEL INSTALLATION	1	HI
	42P4004-1	. FUEL SYSTEM EXTERNAL, Removable	1	HI
-37	42P4004-11	. . HOSE ASSEMBLY	1	HI
	MS21919DG18	. . CLAMP	1	HI

Figure and Index Number	Part Number	1 2 3 4 5 6 7 Description	Units per Assembly	Usable On Code
32A-		*Attaching Parts*		
	AN520-10R10	. . SCREW	1	HI
	AN256F10	. . NUT	1	HI
	AN960D10	. . WASHER	1	HI
		———*———		
-38	MF9-713-30A	. . MOTOR, Hydraulic (VI)	1	HI
	AN816-16-12D	. . NIPPLE	2	HI
-39	42P4011-61	. . TUBE ASSEMBLY	1	HI
	AN784D8	. . TEE	1	HI
	AN815-4D	. . UNION	1	HI
-40	MS28741-8-0180	. . HOSE ASSEMBLY	1	HI
-41	MS28741-8-0200	. . HOSE ASSEMBLY	1	HI
	AN775-8D	. . BOLT	2	HI
	AN776-8D	. . ELBOW	2	HI
	T150-S1-8D	. . COUPLING (AQ)	2	HI
-42	2P-R400BRD5	. . PUMP, Fuel (PE)	1	HI
	42P4011-57	. . TUBE ASSEMBLY	1	HI
-43	42P4004-10	. . HOSE ASSEMBLY	1	HI
	MS21919DG18	. . CLAMP	2	HI
		Attaching Parts		
	AN520-10R10	. . SCREW	2	HI
	AN256F10	. . NUT	2	HI
	AN960D10	. . WASHER	2	HI
		———*———		
-44	1311-563038	. . VALVE, Selector (PA)	1	HI
-45	1111-517706	. . VALVE, Check (PA)	2	HI
-46	42P4004-6	. . HOSE ASSEMBLY	1	HI
-47	42P4011-65	. . TUBE ASSEMBLY	1	HI
	AN815-16D	. . UNION	1	HI
	42P4014-1	. . FITTING, Drain	1	HI
-48	49F9798-58	. . VALVE, Drain (USAF dwg No.)	1	HI
-49	42P4011-37	. . TUBE ASSEMBLY	1	HI
	AN815-4D	. . UNION	1	HI
-50	42P4004-7	. . HOSE ASSEMBLY	1	HI
-51	42P4004-16	. . HOSE ASSEMBLY	2	HI
	42P4004-18	. . HOSE ASSEMBLY	1	HI
	42P4048-1	. . FITTING ASSEMBLY	2	HI
	MS29513-215	. . PACKING, "O" ring	2	HI
	TA572D17	. . CLAMP (THAS)	2	HI
		Attaching Parts		
	AN3DD5A	. . BOLT	2	HI
	AN365D1032A	. . NUT	2	HI
	AN960D10	. . WASHER	4	HI
		———*———		
	42P4051-2	. . CLIP ASSEMBLY	1	HI
	42P4051-1	. . CLIP ASSEMBLY	1	HI
		Attaching Parts		
	AN525D10-8	. . SCREW	2	HI
	AN960D10	. . WASHER	2	HI
		———*———		
-52	42P4004-14	. . HOSE ASSEMBLY	1	HI
	MS21919DG10	. . CLAMP	4	HI
		Attaching Parts		
	AN520-10R10	. . SCREW	1	HI
	AN256F10	. . NUT	1	HI
	AN960D10	. . WASHER	1	HI
		———*———		
-53	AN824-8D	. . TEE	1	HI
-54	42P4004-8	. . HOSE ASSEMBLY	1	HI
	MS21919DG10	. . CLAMP	2	HI

Figure and Index Number	Part Number	1 2 3 4 5 6 7 Description	Units per Assembly	Usable On Code
32A-		*Attaching Parts*		
	AN520-10R10	. . SCREW	1	HI
	AN365-1032	. . NUT	1	HI
	AN960D10	. . WASHER	1	HI
		———*———		
-55	42P4004-9	. . HOSE ASSEMBLY	1	HI
	MS21919DG10	. . CLAMP	2	HI
		Attaching Parts		
	AN520-10R10	. . SCREW	1	HI
	AN365-1032	. . NUT	1	HI
	AN960D10	. . WASHER	1	HI
		———*———		
-56	42P4004-15	. . HOSE ASSEMBLY	1	HI
-57	7005D8	. . NIPPLE ASSEMBLY (WIG)	2	HI
-58	AN939-8D	. . ELBOW	2	HI
	AN833-8D	. . ELBOW	2	HI

Power Plant

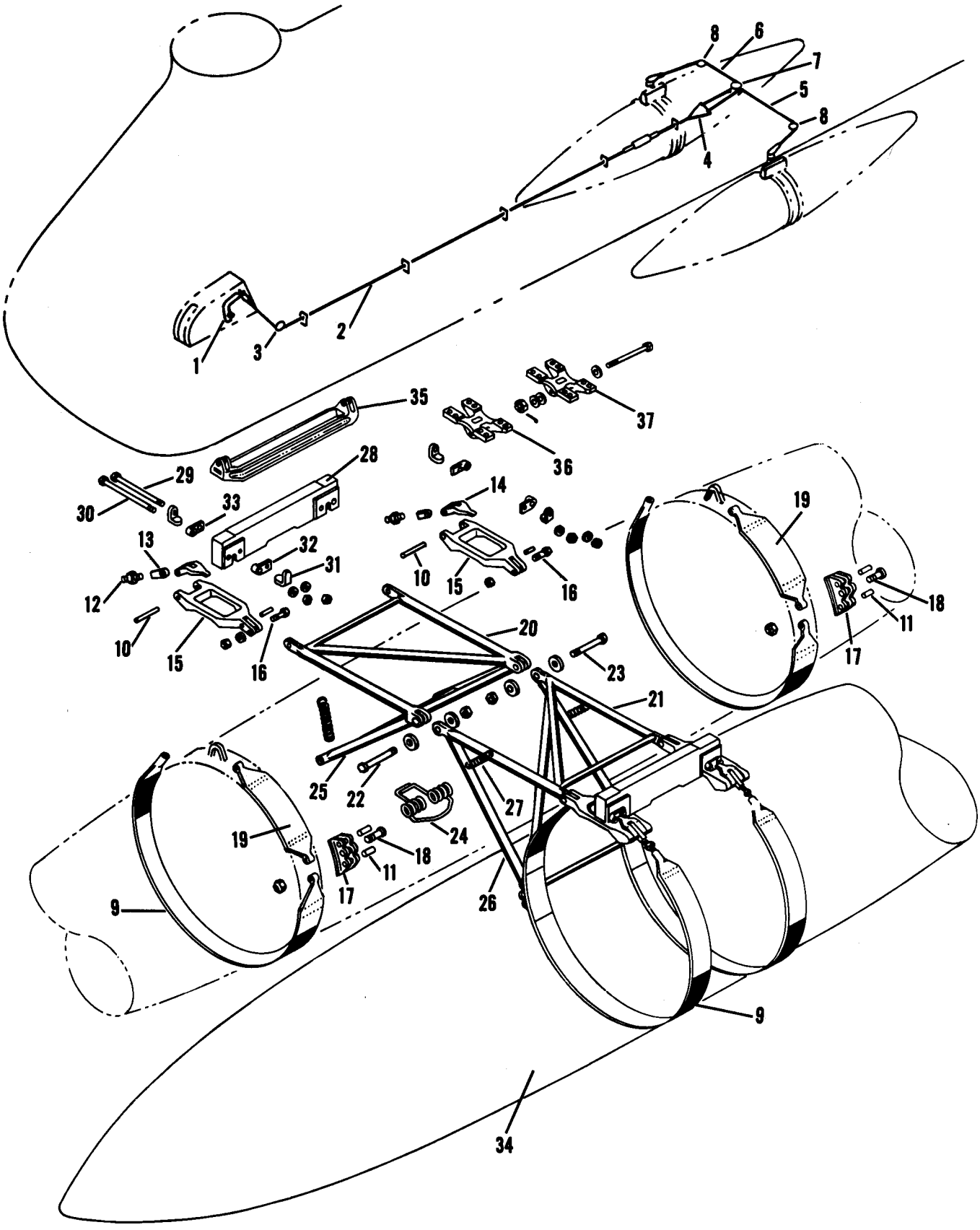

Figure 32B. Auxiliary Fuel Tank, Release and Supports

Figure and Index Number	Part Number	Description 1 2 3 4 5 6 7	Units per Assembly	Usable On Code
32B-	42P4016-1	AUXILIARY FUEL INSTALLATION, See fig. 32A	Ref	HJ
	42P4003-1	EXTERNAL FUEL INSTALLATION, See fig. 32A	Ref	HI
	42E5550-1	. EMERGENCY RELEASE INSTALLATION, Aux fuel tank	1	AU
-1	42E5552-1	. . HANDLE ASSEMBLY	1	AU
		Attaching Parts		
	AN23-22A	. . BOLT	1	AU
	AN364-1032	. . NUT	1	AU
	AN960D10L	. . WASHER	1	AU
	AN960D10	. . WASHER	1	AU
	AN960D516	. . WASHER	4	AU
		———*———		
	NAS43DD3-58	. . BUSHING	1	AU
-2	42E5556-1	. . CABLE ASSEMBLY	1	AU
		Attaching Parts		
	AN393-9	. . PIN, Flat head	1	AU
	AN381-2-8	. . PIN, Cotter	1	AU
	AN960D10L	. . WASHER	1	AU
		———*———		
	42E5558-1	. . FAIRLEAD	1	AU
	42E5558-2	. . FAIRLEAD	1	AU
	42S2333-5	. . PULLEY INSTALLATION	1	AU
	AN392-17	. . . PIN, Flat head	1	AU
	AN381-2-6	. . . PIN, Cotter	1	AU
-3	AN210-3B	. . . PULLEY	1	AU
		Attaching Parts		
	AN525-10R16	. . . SCREW	1	AU
	AN365-1032	. . . NUT	1	AU
	AN960D10	. . . WASHER	4	AU
		———*———		
-4	42E5554-1	. . PLATE, Junction	1	AU
	42E5553-1	. . SPRING	1	AU
-5	42E5556-2	. . CABLE ASSEMBLY	1	AU
-6	42E5556-3	. . CABLE ASSEMBLY	1	AU
		Attaching Parts		
	AN393-9	. . PIN, Flat head	2	AU
	AN381-2-8	. . PIN, Cotter	2	AU
	AN960D10L	. . WASHER	2	AU
		———*———		
	42S2305-5	. . PULLEY INSTALLATION	1	AU
	AN392-29	. . . PIN, Flat head	3	AU
	AN381-2-6	. . . PIN, Cotter	3	AU
	AN960D6	. . . WASHER	3	AU
-7	AN210-2B	. . . PULLEY	2	AU
		Attaching Parts		
	AN525-10R32	. . . SCREW	1	AU
	AN365-1032	. . . NUT	1	AU
	AN960D10	. . . WASHER	5	AU
		———*———		
	42S2389-11	. . PULLEY INSTALLATION	2	AU
	AN392-19	. . . PIN, Flat head	1	AU
	AN381-2-6	. . . PIN, Cotter	1	AU
	AN960D4	. . . WASHER	1	AU
-8	AN210-1B	. . . PULLEY	1	AU
		Attaching Parts		
	AN525-10R16	. . . SCREW	1	AU
	AN365-1032	. . . NUT	1	AU
	AN960D10	. . . WASHER	4	AU
		———*———		
	42P6002-1	. SUPPORT INSTALLATION	1	HJ
	42P6002-8	. SUPPORT INSTALLATION	1	HI
-9	42P6013-1	. . STRAP ASSEMBLY (Used with ST2-165-0000 tank)	4	HJ
	42P6013-7	. . STRAP ASSEMBLY (Used with 211-0000 tank)	4	HJ
	42P6013-14	. . STRAP ASSEMBLY (Used with 42P4046-1 tank)	4	HI
		Attaching Parts		
-10	PHS-10106H12C15	. . PIN (PHL)	1	AU

Figure and Index Number	Part Number	1 2 3 4 5 6 7 Description	Units per Assembly	Usable On Code
32B-11	AN395-31	. . PIN, Flat head	1	AU
	AN381-3-10	. . PIN, Cotter	1	AU
	AN960-516L	. . WASHER	1	AU
		———*———		
-12	42P6014-1	. . SCREW	4	AU
-13	42P6019-1	. . FITTING	4	AU
	42P6002-2	. . BRACE INSTALLATION	1	HJ
	42P6002-9	. . BRACE INSTALLATION	1	HI
	42P6002-5	. . . FITTING ASSEMBLY, LH	1	AU
	42P6002-7	. . . FITTING ASSEMBLY, LH	1	AU
	42P6002-4	. . . FITTING ASSEMBLY, RH	1	AU
	42P6002-6	. . . FITTING ASSEMBLY, RH	1	AU
	3955	. . . . BRACKET ASSEMBLY (Firestone Tire and Rubber Co of Calif, Los Angeles, Calif)	4	HI
	42P6012-2	. . . . HOOK, LH	1	AU
-14	42P6012-1	. . . . HOOK, RH	1	AU
	42P6006-1	. . . . FITTING, LH	1	AU
-15	42P6006-2	. . . . FITTING, RH	1	AU
		Attaching Parts		
-16	AN25-24	. . . . BOLT	1	AU
	AN381-2-12	. . . . PIN, Cotter	1	AU
	AN320-5	. . . . NUT	1	AU
	AN960-516	. . . . WASHER	1	AU
		———*———		
-17	42P6011-5	. . . FITTING	4	AU
		Attaching Parts		
-18	AN25-21	. . . BOLT	1	AU
	AN381-2-12	. . . PIN, Cotter	1	AU
	AN320-5	. . . NUT	1	AU
	AN960-516	. . . WASHER	1	AU
		———*———		
-19	42P6007-2	. . . STRAP (Used with ST2-165-0000 tank)	4	HJ
	42P6007-1	. . . STRAP (Used with 211-0000 tank)	4	HJ
	42P6007-9	. . . STRAP (Used with 42P4046-1 tank)	4	HI
		Attaching Parts		
	AN395-33	. . . PIN, Flat head	2	AU
	AN381-3-10	. . . PIN, Cotter	2	AU
		———*———		
-20	42P6003-1	. . . TUBE ASSEMBLY, Upper	1	AU
-21	42P6003-2	. . . TUBE ASSEMBLY, Upper	1	AU
		Attaching Parts		
-22	AN7C54	. . . BOLT	1	AU
-23	AN7C25	. . . BOLT	1	AU
	AN381-2-14	. . . PIN, Cotter	2	AU
	AN310-7	. . . NUT	2	AU
	AN960-7	. . . WASHER	2	AU
	AN960C716	. . . WASHER	3	AU
		———*———		
-24	42P6023-3	. . . SPRING	1	AU
-25	42P6004-1	. . . TUBE ASSEMBLY, Lower	1	AU
-26	42P6004-2	. . . TUBE ASSEMBLY, Lower	1	AU
		Attaching Parts		
	AN5C17	. . . BOLT (Used with 42P6004-1)	2	AU
	AN5C15	. . . BOLT (Used with 42P6004-2)	2	AU
	AN381-2-12	. . . PIN, Cotter	2	AU
	AN310-5	. . . NUT	2	AU
	AN960-516	. . . WASHER	3	AU
		———*———		
-27	42P6020-1	. . . SPRING	4	AU
		Attaching Parts		
	AN393-43	. . . PIN, Flat head	2	AU
	AN381-2-7	. . . PIN, Cotter	2	AU
	AN960-10L	. . . WASHER	2	AU
		———*———		

Figure and Index Number	Part Number	Description 1 2 3 4 5 6 7	Units per Assembly	Usable On Code
32B-	42P6002-3	. . BOMB RACK INSTALLATION	1	AU
-28	45G25670	. . . BOMB RACK, Type S-2A (USAF dwg No.) (GFAE)	2	AU
		Attaching Parts		
-29	AN5-31A	. . . BOLT	2	AU
-30	AN5-37A	. . . BOLT	2	AU
	AN365-524	. . . NUT	4	AU
-31	42P6021-1	. . . FITTING	4	AU
-32	42P6022-1	. . . WASHER	2	AU
-33	42P6022-2	. . . WASHER	2	AU
	AN960-516	. . . WASHER	4	AU
	AN960-516L	. . . WASHER	2	AU
		***		
-34	ST2-165-0000	. . TANK, Aux fuel (FAV) (GFAE)	2	HJ
	or			
	211-0000	. . TANK, Aux fuel (BEA) (GFAE)	2	HJ
	42P4046-1	. . TANK, Self-sealing	2	HI
	42S4700-1	. SUPPORT INSTALLATION, Removable	1	HJ
	42S4700-4	. SUPPORT INSTALLATION, Removable	1	HI
-35	42S4942-1	. . FITTING ASSEMBLY	2	HJ
	42S4942-3	. . FITTING ASSEMBLY	2	HI
		Attaching Parts		
	AN5-16A	. . BOLT	2	HJ
	AN5-20A	. . BOLT	2	HI
	AN365-524	. . NUT	2	AU
	AN960-516L	. . WASHER (One under head one under nut)	4	AU
		***		
-36	42S4755-1	. . FITTING ASSY, Aft sway brace	1	AU
	42S4755-6	. . FITTING ASSY, Aft sway brace	1	AU
-37	42S4754-1	. . FITTING ASSY, Fwd sway brace	1	AU
	42S4754-6	. . FITTING ASSY, Fwd sway brace	1	AU
		Attaching Parts		
	AN4-10A	. . BOLT	3	AU
	AN4-11A	. . BOLT	5	AU
	AN960D416	. . WASHER	12	AU
		***		
	42S4700-3	. SUPPORT INSTALLATION, Permanent	1	AV
	42S4923-1	. SUPPORT INSTALLATION, Permanent	1	I
	42S4948-2	. . FITTING	2	AV
	42S4948-1	. . FITTING	2	AV
	42S4951-2	. . FITTING	2	I
	42S4951-1	. . FITTING	2	I
		Attaching Parts		
	AN5-16A	. . BOLT	1	AV
	AN5-12A	. . BOLT	1	AV
	AN5-12A	. . BOLT	2	I
	AN365-524	. . NUT	2	AV,I
	AN960D516L	. . WASHER (Used under head)	2	AV
	AN960D516	. . WASHER (Used under nut)	2	AV
	AN960D516	. . WASHER	4	I
		***		

Power Plant

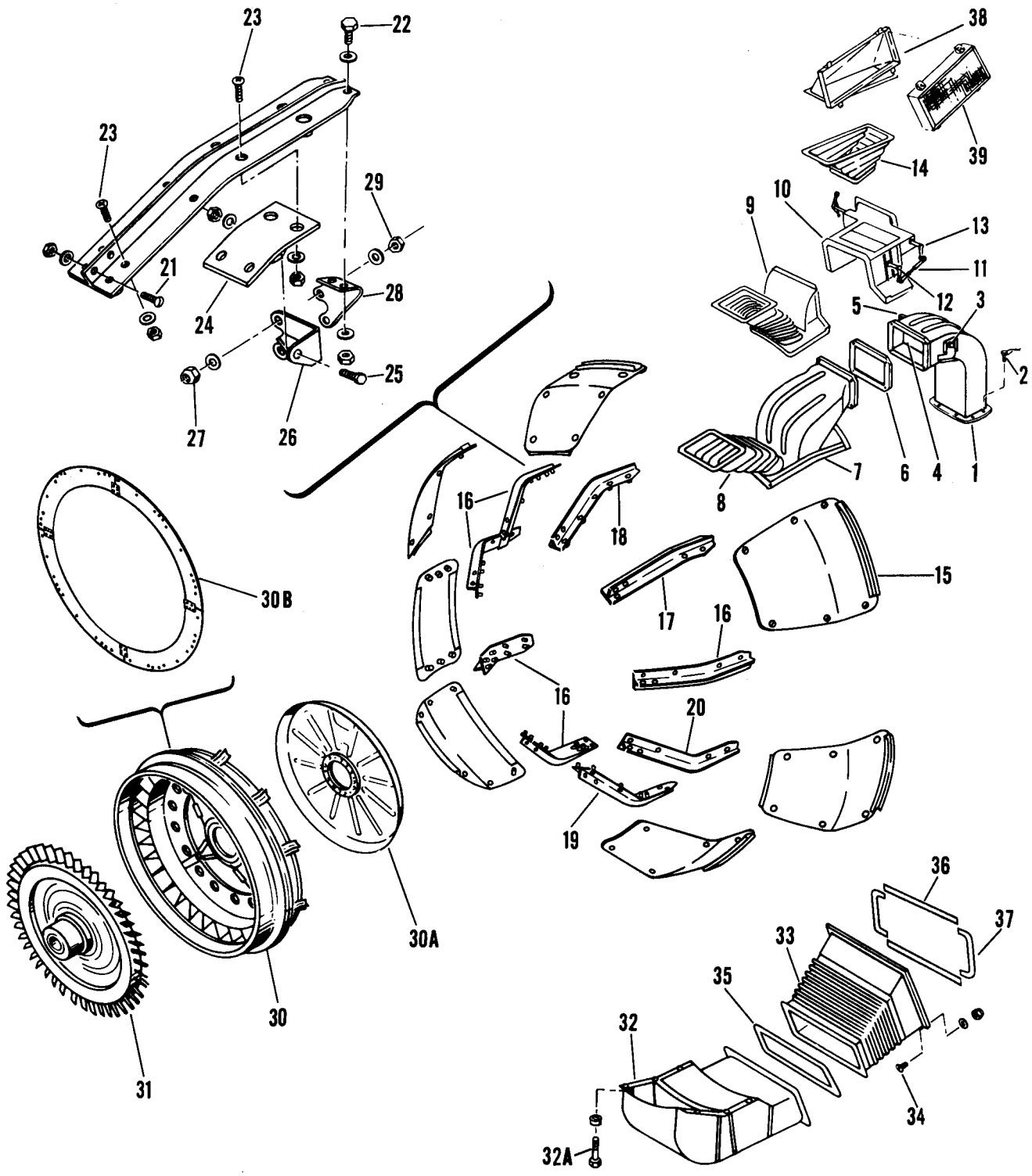

Figure 33. Cooling System

Figure and Index Number	Part Number	Description 1 2 3 4 5 6 7	Units per Assembly	Usable On Code
33-	22P6001-1	COOLING SYSTEM INSTALLATION	1	J
	42P6001-1	COOLING SYSTEM INSTALLATION	1	HJ
	42P6001-2	COOLING SYSTEM INSTALLATION	1	HI
	22P5011-1	. DUCT INSTALLATION, Carburetor air	1	A,BD
	22P5011-21	. DUCT INSTALLATION, Carburetor air	1	BE
	22P5011-30	. DUCT INSTALLATION, Carburetor air	1	BY
	22P5011-32	. DUCT INSTALLATION, Carburetor air	1	EM
	42P5006-1	. DUCT INSTALLATION, Carburetor air	1	IV
-1	22P5011-2	. . DUCT ASSEMBLY, Carburetor air	1	A,BD
	22P5011-20	. . DUCT ASSEMBLY, Carburetor air	1	BE
	22P5011-31	. . DUCT ASSEMBLY, Carburetor air	1	BY
	22P5011-33	. . DUCT ASSEMBLY, Carburetor air	1	EM
	42P5006-28	. . DUCT ASSEMBLY, Carburetor air	1	IV
		Attaching Parts		
-2	AN74A6	. . BOLT	8	
	AN4-7A	. . BOLT (Used with 22P5011-2 and -20)	4	
	AN4-10A	. . BOLT (Used with 22P5011-31 and -33)	10	
	AN4-6A	. . BOLT (Used with 42P5006-2)	10	
	AN960D416L	. . WASHER	8	
	AN960D416	. . WASHER (Used with 22P5011-2 and -20)	8	
	AN960D416	. . WASHER (Used with 22P5011-31, -33, and 42P5006-2)	20	
	AN995NC40	. . WIRE, Lock	AR	
		———*———		
-3	22P3043-1	. . . HOUSING ASSEMBLY	2	J,EM
	42P5067-1	. . . HOUSING ASSEMBLY	2	HJ
	AN201KP6A	. . . . BEARING	1	J
	AN201KP8A	. . . . BEARING	1	HJ
	22P3043-2	. . . . HOUSING	1	J
	42P5067-2	. . . . HOUSING	1	HJ
	42P5006-27	. . . . WASHER	1	IV
	22P5044-1	. . . SHAFT, Carburetor air	1	J
	42P5064-1	. . . SHAFT, Carburetor air	1	HJ
		Attaching Parts		
	AN364-624	. . . NUT	1	J
	AN364-820	. . . NUT	1	HJ
	AN960-616	. . . WASHER	1	J
	AN960-816	. . . WASHER	1	HJ
		———*———		
-4	22P5012-1	. . . DOOR ASSEMBLY, Carburetor air	1	J,EM
	22P5012-10	. . . DOOR ASSEMBLY, Carburetor air	1	BY
	42P5008-1	. . . DOOR ASSEMBLY, Carburetor air	1	IV
		Attaching Parts		
	AN386-1-6A	. . . PIN, Taper	2	J
	AN386-1-7A	. . . PIN, Taper	3	HJ
	AN364-1032	. . . NUT	2	J
	AN364-1032	. . . NUT	3	HJ
	AN975-3	. . . WASHER	2	J
	AN975-3	. . . WASHER	3	HJ
		———*———		
-5	22P5046-12	. . . LEVER ASSEMBLY, Carburetor air door	1	J
	22P5046-14	. . . LEVER ASSEMBLY, Carburetor air door	1	EM
	42P5069-1	. . . LEVER ASSEMBLY, Carburetor air door	1	HL
	or			
	42P5065-1	. . . LEVER ASSEMBLY, Carburetor air door	1	HL
		Attaching Parts		
	AN386-1-6A	. . . PIN, Taper (used with 22P5046-12)	1	
	AN386-1-6A	. . . PIN, Taper (used with 22P5046-14 and 42P5065-1)	2	
	AN386-1-7A	. . . PIN, Taper (used with 42P5069-1)	2	
	AN364-1032	. . . NUT	1	J
	AN364-1032	. . . NUT	2	HJ
	AN975-3	. . . WASHER	1	J
	AN975-3	. . . WASHER	2	HJ
		———*———		

Figure and Index Number	Part Number	1 2 3 4 5 6 7 Description	Units per Assembly	Usable On Code
33-6	22P6046-3	. . . GASKET	1	J
	22P5052-50	. . . DUCT, Carburetor air	1	J
	22P5052-59	. . . DUCT, Carburetor air	1	ED
	42P5006-29	. . . DUCT, Carburetor air	1	IV
-7	22P5059-1	. DUCT ASSEMBLY, Transmission and carb air	1	A
	22P5058-1	. DUCT ASSEMBLY, Transmission and carb air	1	E
		Attaching Parts		
	4002-7	. STUD (CLC)	4	
	4002-8	. STUD (CLC)	2	
	4002-N	. GROMMET (CLC)	6	
	R4G	. RING (CLC)	6	
		———*———		
	22P5053-17	. . SEAL, Rear	1	J
-8	22P6013-1	. . DUCT ASSEMBLY, Flexible	1	J
-9	42P5058-1	. DUCT ASSEMBLY, Transmission and carb air fwd	1	HJ
		Attaching Parts		
	4002-10	. STUD (CLC)	2	HJ
	4002-6	. STUD (CLC)	9	HJ
	4002-0	. GROMMET (CLC)	2	HJ
	4002-N	. GROMMET (CLC)	9	HJ
	R4G	. RING (CLC)	11	HJ
		———*———		
-10	42P5058-57	. DUCT ASSEMBLY, Transmission and carb air aft	1	HJ
		Attaching Parts		
	4002-8	. STUD (CLC)	4	HJ
	40G6-1	. GROMMET (CLC)	4	HJ
	R4G	. RING (CLC)	4	HJ
		———*———		
-11	22C1028-13	. . LINK ASSEMBLY	1	HJ
		Attaching Parts		
	AN24-18	. . BOLT	2	HJ
	AN381-2-12	. . PIN, Cotter	2	HJ
	AN320-4	. . NUT	2	HJ
	AN960-416	. . WASHER	2	HJ
		———*———		
	FR4-5	. . . BEARING, Rod end (SHA)	1	HJ
	AN316-5R	. . . NUT	1	HJ
	22C1028-14	. . . ROD ASSEMBLY	1	HJ
	FR4-5	. . . . BEARING, Rod end (SHA)	1	HJ
	AN316-5R	. . . . NUT	1	HJ
	22C1028-15	. . . . ROD	1	HJ
-12	42P5049-4	. . LEVER ASSEMBLY	1	HJ
-13	42P5049-5	. . LEVER ASSEMBLY	1	HJ
	42P5060-1	. . BELLCRANK ASSEMBLY	1	HJ
	or			
	42P5061-1	. . BELLCRANK ASSEMBLY	1	HJ
		Attaching Parts		
	AN386-1-8A	. . PIN, Taper	1	HJ
	AN364-1032	. . NUT	1	HJ
	AN975-3	. . WASHER	1	HJ
		———*———		
	42P5040-18	. . DOOR ASSEMBLY, Carb air filter	1	HJ
		Attaching Parts		
	AN386-1-6A	. . PIN, Taper	2	HJ
	AN364-1032	. . NUT	2	HJ
	AN975-3	. . WASHER	2	HJ
		———*———		
	42P5050-3	. . HOUSING ASSEMBLY	1	HJ
	42P5051-1	. . HOUSING ASSEMBLY	1	HJ
	AN201KP8A	. . . BEARING	1	HJ
	AN201KP5A	. . . BEARING	1	HJ
	42P5050-4	. . . HOUSING	1	HJ
	42P5051-3	. . . HOUSING	1	HJ
	42P5042-1	. . SHAFT, Carb air filter door	1	HJ
	42P5048-1	. . FITTING	1	HJ
	42P5050-1	. . HOUSING ASSEMBLY	2	HJ
	AN201KP8A	. . . BEARING	1	HJ
	42P5050-2	. . . HOUSING	1	HJ

Figure and Index Number	Part Number	1 2 3 4 5 6 7 Description	Units per Assembly	Usable On Code
33-	42P5046-2	. . SHAFT, Carb air filter control	1	HJ
-14	42P5003-1	. . DUCT ASSEMBLY, Carb air filter flexible	1	HJ
-15	22P6056-1	. PANEL ASSEMBLY, Engine cowl	7	J
	22P6056-9	. PANEL ASSEMBLY, Engine cowl	7	DN
	42P6026-1	. PANEL ASSEMBLY, Engine cowl	7	DO
		Attaching Parts		
	4002-10	. STUD (CLC)	2	J
	4002-10	. STUD (CLC)	4	DO
	4002-11	. STUD (CLC)	4	DN
	4002-12	. STUD (CLC)	2	J,DO
	4002-13	. STUD (CLC)	2	DN
	40G18	. GROMMET (CLC)	4	J
	40G18	. GROMMET (CLC)	6	AU
	R4G	. RING (CLC)	4	J
	R4G	. RING (CLC)	6	AU
		———*———		
	22P6056-4	. . SEAL, Front	1	
	22P6056-6	. . SEAL, Rear	1	
	22P6056-2	. . SEAL, Side	2	J
	22P6056-13	. . SEAL, Side	2	AU
	22P6006-11	. SUPPORT INSTALLATION, Stator and cowl	1	A
	22P6007-1	. SUPPORT INSTALLATION, Stator and cowl	1	E
	22P6007-3	. SUPPORT INSTALLATION, Stator and cowl	1	HJ
	22P6007-4	. SUPPORT INSTALLATION, Stator and cowl	1	HI
-16	22P6041-1	. . SUPPORT ASSEMBLY, Engine cowl	5	A
	22P6053-1	. . SUPPORT ASSEMBLY, Engine cowl	5	E
	22P6053-20	. . SUPPORT ASSEMBLY, Engine cowl	5	HJ
	22P6053-20	. . SUPPORT ASSEMBLY, Engine cowl	7	HI
-17	22P6041-5	. . SUPPORT ASSEMBLY, Engine cowl	1	A
	22P6053-3	. . SUPPORT ASSEMBLY, Engine cowl	1	E
	22P6053-22	. . SUPPORT ASSEMBLY, Engine cowl	1	HJ
-18	22P6041-4	. . SUPPORT ASSEMBLY, Engine cowl	1	A
	22P6053-2	. . SUPPORT ASSEMBLY, Engine cowl	1	E
	22P6053-21	. . SUPPORT ASSEMBLY, Engine cowl	1	HJ
-19	22P6041-11	. . SUPPORT ASSEMBLY, Engine cowl	1	A
	22P6053-11	. . SUPPORT ASSEMBLY, Engine cowl	1	E
	22P6053-30	. . SUPPORT ASSEMBLY, Engine cowl	1	AU
-20	22P6041-10	. . SUPPORT ASSEMBLY, Engine cowl	1	A
	22P6053-10	. . SUPPORT ASSEMBLY, Engine cowl	1	E
	22P6053-31	. . SUPPORT ASSEMBLY, Engine cowl	1	AU
		Attaching Parts		
-21	AN23-8A	. . BOLT	2	
-22	AN3-5A	. . BOLT	2	
-23	AN509-10R8	. . SCREW	6	
	AN364-1032	. . NUT	2	
	AN365-1032	. . NUT	8	
	AN960D10	. . WASHER	10	
	AN960D10L	. . WASHER	6	
		———*———		
-24	22P6054-1	. . TEE, Cowling support	9	A
	22P6054-2	. . TEE, Cowling support	9	B
		Attaching Parts		
-25	AN3-5A	. . BOLT	1	
	AN365-1032	. . NUT	1	
	AN960-10	. . WASHER	1	
		———*———		
-26	22P6051-3	. . BRACKET, Cowling support	9	A
	22P6055-2	. . BRACKET, Cowling support	9	B
		Attaching Parts		
-27	AN365-524	. . NUT	2	
	AN960-516	. . WASHER	2	
		———*———		

Figure and Index Number	Part Number	1 2 3 4 5 6 7 Description	Units per Assembly	Usable On Code
33-28	22P6043-4	. . BRACKET, Cowling support	9	A
	22P6052-2	. . BRACKET, Cowling support	9	B
		Attaching Parts		
-29	AN365-524	. . NUT	2	
	AN960-516	. . WASHER	2	
		———*———		
-30	115901-1	. . STATOR AND SUPPORT ASSEMBLY (BM) (With turnbuckles)	1	A
	115901-3	. . STATOR AND SUPPORT ASSEMBLY (BM) (With turnbuckles)	1	
-30A	115901-9	. . STATOR AND SUPPORT ASSEMBLY (BM) (Without turnbuckles)	1	
	or			
	115901-11	. . STATOR AND SUPPORT ASSEMBLY (BM) (Without turnbuckles)	1	
	or			
	115901-13	. . STATOR AND SUPPORT ASSEMBLY (BM) (Without turnbuckles)	1	
-30B	SK3287-3	. . SPOILER INSTALLATION, Engine fan (PHL)	1	
-31	22D3076	. FAN AND HUB ASSEMBLY, Engine cooling, see fig. 34*	Ref	
-32	22P3075-50	. DUCT ASSEMBLY, Engine oil cooler	1	CM
	22P3075-51	. DUCT ASSEMBLY, Engine oil cooler	1	CN
	22P3075-56	. DUCT ASSEMBLY, Engine oil cooler	1	HJ
	42P3075-1	. DUCT ASSEMBLY, Engine oil cooler laminated glass cloth	1	HI
		Attaching Parts		
-32A	AN5-6A	. BOLT	6	CN,AU
	AN960-516	. WASHER	6	CN,AU
		———*———		
-33	22P3073-1	. DUCT ASSEMBLY, Oil cooler flexible	1	
	or			
	22P3073-2	. DUCT ASSEMBLY, Oil cooler flexible	1	
		Attaching Parts		
-34	AN525D10-10	. SCREW	14	
	AN365D1032	. NUT	14	
	AN960D10	. WASHER	28	
	4002-6	. STUD (CLC)	12	
	4002-N	. GROMMET (CLC)	12	
	R4G	. RING (CLC)	12	
		———*———		
-35	22P3047-3	. GASKET	1	
-36	22P3047-4	. GASKET	2	
-37	22P3047-5	. GASKET	2	
	42P5001-1	FILTER INSTALLATION, Carburetor air	1	AU
-38	42P5002-1	. DUCT ASSEMBLY, Carburetor air filter	1	EM
	42P5002-21	. DUCT ASSEMBLY, Carburetor air filter	1	HL,HI
-39	13741B	. FILTER ASSEMBLY (AMA)	1	EM
	120604	. FILTER ASSEMBLY (AMA)	1	HL,HI

*For proper usable on codes and complete breakdown, see figure number as indicated.

PAGES 205 AND 206 DELETED

Figure and Index Number	Part Number	1 2 3 4 5 6 7 Description	Units per Assembly	Usable On Code
33-		*Attaching Parts*		
	AN525-10R14	. SCREW	8	HI
	AN960D10L	. WASHER	16	HI
		———*———		
-43	42P5028-1	. . LEVER ASSEMBLY, Alternate carburetor air door	1	HI
	or			
	42P5030-1	. . LEVER ASSEMBLY, Alternate carburetor air door	1	HI
		Attaching Parts		
	AN386-1-10A	. . PIN, Taper	1	HI
	AN364-1032	. . NUT	1	HI
	AN975-3	. . WASHER	1	HI
		———*———		
-44	42C2338-1	. . ROD ASSEMBLY, Carburetor air control	1	HI
		Attaching Parts		
	AN24-26	. . BOLT	1	HI
	AN24-20	. . BOLT	1	HI
	AN320-4	. . NUT	2	HI
	AN381-2-10	. . PIN, Cotter	2	HI
	AN960-416	. . WASHER	2	HI
		———*———		
	RE4F5	. . . BEARING, Rod end (FAF)	1	HI
	RE4M6	. . . BEARING, Rod end (FAF)	1	HI
	1635	. . . QUICK DISCONNECT (DASI)	1	HI
-45	42C23338-2	. . ROD ASSEMBLY, Carburetor air control	1	HI
		Attaching Parts		
	AN24-24	. . BOLT	1	HI
	AN24-23	. . BOLT	1	HI
	AN320-4	. . NUT	2	HI
	AN381-2-10	. . PIN, Cotter	2	HI
	AN960-416	. . WASHER	2	HI
		———*———		
	RE4F5	. . . BEARING, Rod end (FAF)	1	HI
	RE4M6	. . . BEARING, Rod end (FAF)	1	HI
	1635	. . . QUICK DISCONNECT (DASI)	1	HI
-46	42P5022-4	. . DOOR ASSEMBLY, Alternate carburetor air	1	HI
		Attaching Parts		
	AN386-1-7A	. . PIN, Taper	4	HI
	AN364-1032	. . NUT	4	HI
	AN975-3	. . WASHER	4	HI
		———*———		
	42P5022-19	. . . SEAL, Rubber	2	HI
-47	42P5022-3	. . FRAME ASSEMBLY, Carburetor air door	1	HI
		Attaching Parts		
	4002-7S300	. . STUD (CLC)	4	HI
	4002-NS	. . GROMMET (CLC)	4	HI
	R4GS	. . RING, Snap (CLC)	4	HI
		———*———		
	42P5022-20	. . . SEAL	2	HI
	42P5022-37	. . . SEAL	2	HI
	42P5022-38	. . . SEAL	1	HI
	42P5022-21	. . . HINGE, Half	1	HI
	42P5022-22	. . . HINGE, Half	1	HI
	42P5022-23	. . . PIN, Hinge	1	HI
	42P5032-1	. . SHAFT, Alternate carburetor air door	1	HI
		Attaching Parts		
	AN364-1018	. . NUT	1	HI
	NAS77-10-19	. . BUSHING	1	HI
		———*———		
	42P5032-2	. . SHAFT END, Alternate carburetor air door	1	HI
	42P5032-3	. . SHAFT END, Alternate carburetor air door	1	HI
	42P5032-4	. . SHAFT, Carburetor air door	1	HI

Figure and Index Number	Part Number	1 2 3 4 5 6 7 Description	Units per Assembly	Usable On Code
33-		*Attaching Parts*		
	AN525-10R20	. . SCREW	1	HI
	AN365-1032	. . NUT	1	HI
	AN960-10	. . WASHER	1	HI
	AN960-10L	. . WASHER (Used under head)	1	HI
	AN364-1018	. . NUT	1	HI
	NAS77-10-19	. . BUSHING	1	HI
		———*———		
	42P5032-2	. . SHAFT END, Carburetor air door	1	HI
	42P5032-5	. . SHAFT END, Carburetor air door	1	HI
-48	42C2339-1	. . QUADRANT ASSEMBLY, Carburetor air control	1	HI
	42C2341-4	. . . ARM	1	HI
	42C2341-5	. . . ARM	1	HI
		Attaching Parts		
	AN174-10A	. . . BOLT	2	HI
	AN174-14A	. . . BOLT	1	HI
	AN365-428	. . . NUT	3	HI
	AN960D416	. . . WASHER	3	HI
	AN960D416L	. . . WASHER (Used under head)	3	HI
	42C2347-1	. . . SPACER (Used with AN174-14A)	1	HI
		———*———		
	42C2341-3	. . . GUARD	2	HI
		Attaching Parts		
	AN525-832R14	. . . SCREW	4	HI
	AN365-832	. . . NUT	4	HI
	AN960D8	. . . WASHER	4	HI
	AN960D8L	. . . WASHER (Used under head)	4	HI
		———*———		
-49	42C2345-1	. . BELLCRANK ASSEMBLY, Carburetor air control	1	HI
	or			
	42C2344-1	. . BELLCRANK ASSEMBLY, Carburetor air control	1	HI
		Attaching Parts		
	AN386-1-12A	. . PIN, Taper	1	HI
	AN364-1032	. . NUT	1	HI
	AN975-3	. . WASHER	1	HI
		———*———		
-50	42P5025-1	. . DOOR ASSEMBLY, Carburetor air	1	HI
		Attaching Parts		
	AN386-1-8A	. . PIN, Taper	2	HI
	AN364-1032	. . NUT	2	HI
	AN975-3	. . WASHER	2	HI
		———*———		
	42P5025-5	. . . STRIP, Rubber	2	HI
	42P5025-7	. . . SEAL, Rubber	2	HI
-51	120837	. FILTER ASSEMBLY, Carburetor air (AMA)	1	HI
-52	425021-1	. DUCT ASSEMBLY, Carburetor air fwd	1	HI
		Attaching Parts		
	4002-7S300	. STUD (CLC)	4	HI
	4002-8S300	. STUD (CLC)	2	HI
	4002-9S300	. STUD (CLC)	2	HI
	4002-0S	. GROMMET (CLC)	8	HI
	R4GS	. RING, Snap (CLC)	8	HI
		———*———		
	42P5021-11	. SEAL, Rubber	1	HI
-53	42P5027-1	. DUCT ASSEMBLY, Transmission air	1	HI
		Attaching Parts		
	4002-10	. STUD (CLC)	4	HI
	4002-12	. STUD (CLC)	2	HI
	40G18-1	. GROMMET (CLC)	6	HI
	R4G	. RING, Snap (CLC)	6	HI
		———*———		

Figure and Index Number	Part Number	1 2 3 4 5 6 7 Description	Units per Assembly	Usable On Code
33-	22P6056-6	. . SEAL, Aft	1	HI
	22P6056-13	. . SEAL, Side	2	HI
	42P6056-8	. . SEAL, Fwd	1	HI
-54	22P6013-1	. . DUCT ASSEMBLY, Flexible	1	HI

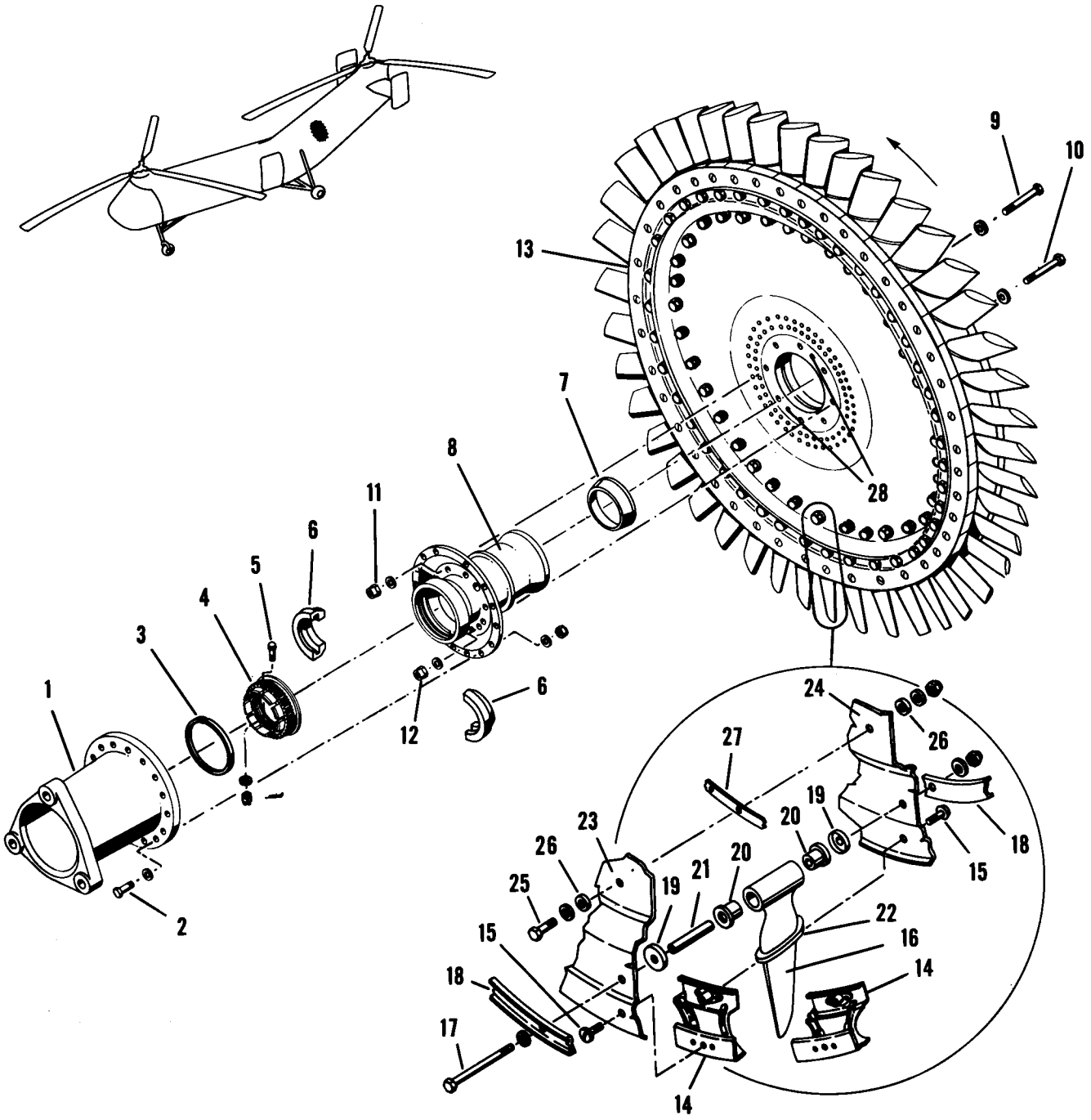

Figure 34. Engine Cooling Fan

All data deleted from page 207

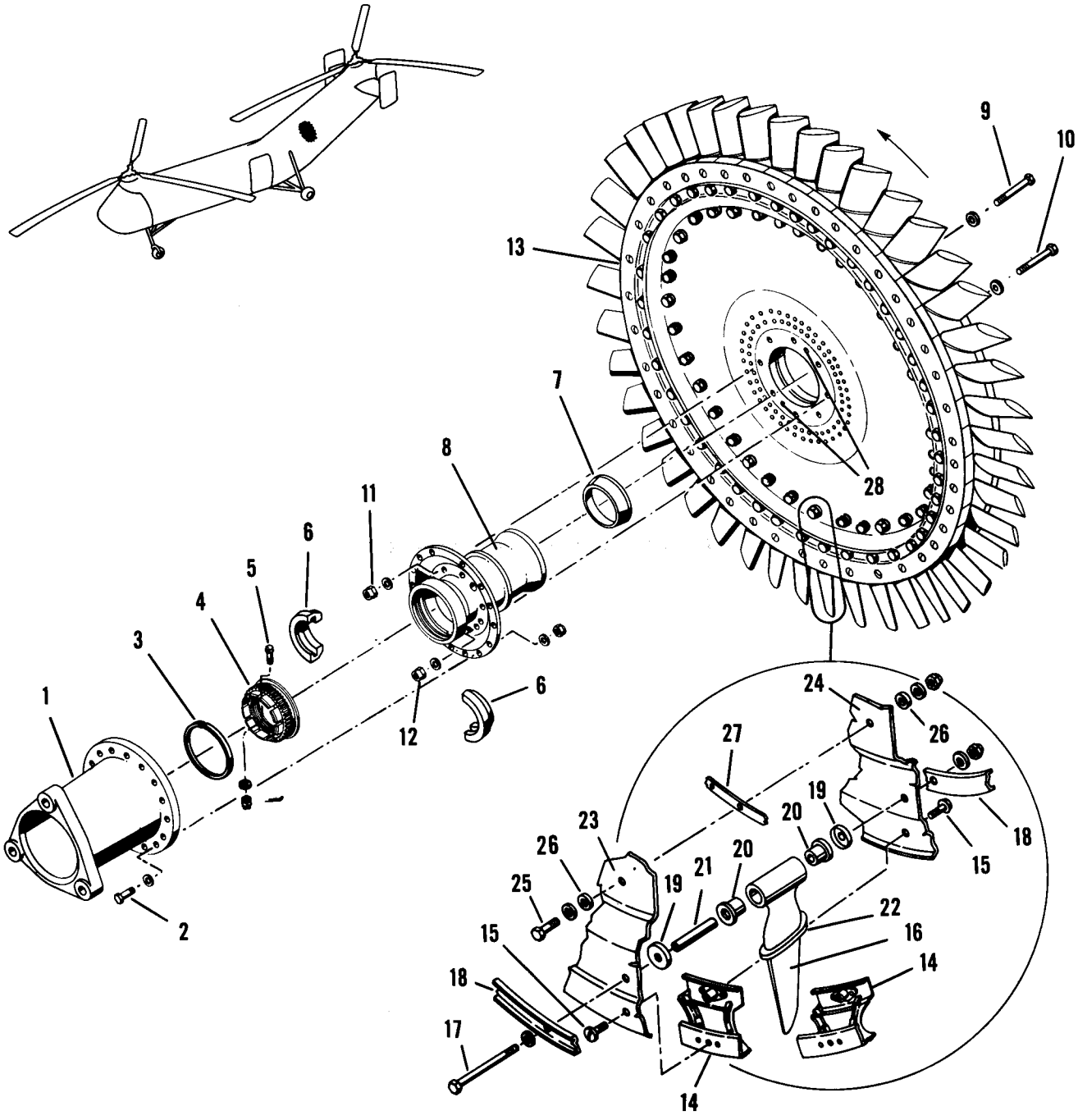

Figure 34. Engine Cooling Fan

Figure and Index Number	Part Number	Description 1 2 3 4 5 6 7	Units per Assembly	Usable On Code
34-	22D3076-23	FAN AND HUB ASSEMBLY, Engine cooling	1	
	or			
	22D3076-17	FAN AND HUB ASSEMBLY, Engine cooling	1	
-1	42D3053-3	. ADAPTER, Flexible coupling	1	
	or			
	42D3053-2	. ADAPTER, Flexible coupling	1	
	or			
	42D3053-1	. ADAPTER, Flexible coupling	1	
		Attaching Parts		
-2	AN174-11A	. BOLT	16	
	AN365-428	. NUT	16	
	AN960D416	. WASHER	16	
	AN960-416	. WASHER	16	

-3	AN5009-50	. RING, Snap	1	
-4	22D3097-1	. NUT	1	
		Attaching Parts		
-5	AN4-7	. BOLT	1	
	AN381-2-8	. PIN, Cotter	1	
	AN310-4	. NUT	1	
	AN960-416	. WASHER	1	

-6	42D3060-1	. CONE, Front split	1	
-7	AN5008-50A	. CONE, Rear	1	
	22D3076-24	. FAN AND HUB SUBASSEMBLY, Engine cooling (used with 22D3076-23)	1	
	or			
	22D3076-16	. FAN AND HUB SUBASSEMBLY, Engine cooling (used with 22D3076-17)	1	
-8	22D3178-2	. . HUB	1	
		Attaching Parts		
-9	AN5-25A	. . BOLT	6	
-10	AN177-26A	. . BOLT	2	
-11	AN365-524	. . NUT	6	
-12	AN365-720	. . NUT	2	
	AN960-516	. . WASHER	12	
	AN960-716	. . WASHER	4	

-13	115801-7	. . ROTOR ASSEMBLY (BM) (Used with 22D3076-24)	1	
	or			
	115801-5	. . ROTOR ASSEMBLY (BM) (Used with 22D3076-16)	1	
-14	115802-1	. . . CHANNEL (BM)	43	
		Attaching Parts		
-15	AN525-10-8	. . . SCREW	2	
	AN960PD10L	. . . WASHER	2	

-16	115460-1	. . . BLADE (BM)	43	
		Attaching Parts		
-17	AN4-27A	. . . BOLT	1	
	AN4-30A	. . . BOLT (Used when balancing washers are required)	1	
	AN365-428	. . . NUT	1	
	AN960PD416	. . . WASHER	2	

-18	115858-1	. . . RING, Washer (BM)	2	
-19	115059-1	. . . FERRULE (BM)	86	
-20	115872-1	. . . BUSHING (BM)	86	
-21	115457-1	. . . COLLAR (BM)	43	
-22	115863-1	. . . BAND (BM)	43	
-23	115852-1	. . . BULKHEAD, Forward (BM)	1	
-24	115851-1	. . . BULKHEAD, Aft (BM)	1	

Figure and Index Number	Part Number	1 2 3 4 5 6 7 Description	Units per Assembly	Usable On Code
34-		*Attaching Parts*		
-25	AN4-11A	. . . BOLT (Used with 115801-7)	36	
	AN4DD11A	. . . BOLT (Used with 115801-5)	36	
	AN365-428	. . . NUT (Used with 115801-7)	36	
	AN365D428	. . . NUT (Used with 115801-5)	36	
	AN960PD416	. . . WASHER	72	
-26	115856-1	. . . WASHER (BM)	72	
		————*————		
-27	115855-1	. . . RING, Spacer (BM)	1	
-28	115057-1	. . . PIN, Dowel (BM)	2	
	115871-1	. . . WEIGHT, Balance (BM)	AR	
	115871-3	. . . WEIGHT, Balance (BM)	AR	
	115871-5	. . . WEIGHT, Balance (BM)	AR	
	115871-7	. . . WEIGHT, Balance (BM)	AR	

Power Plant

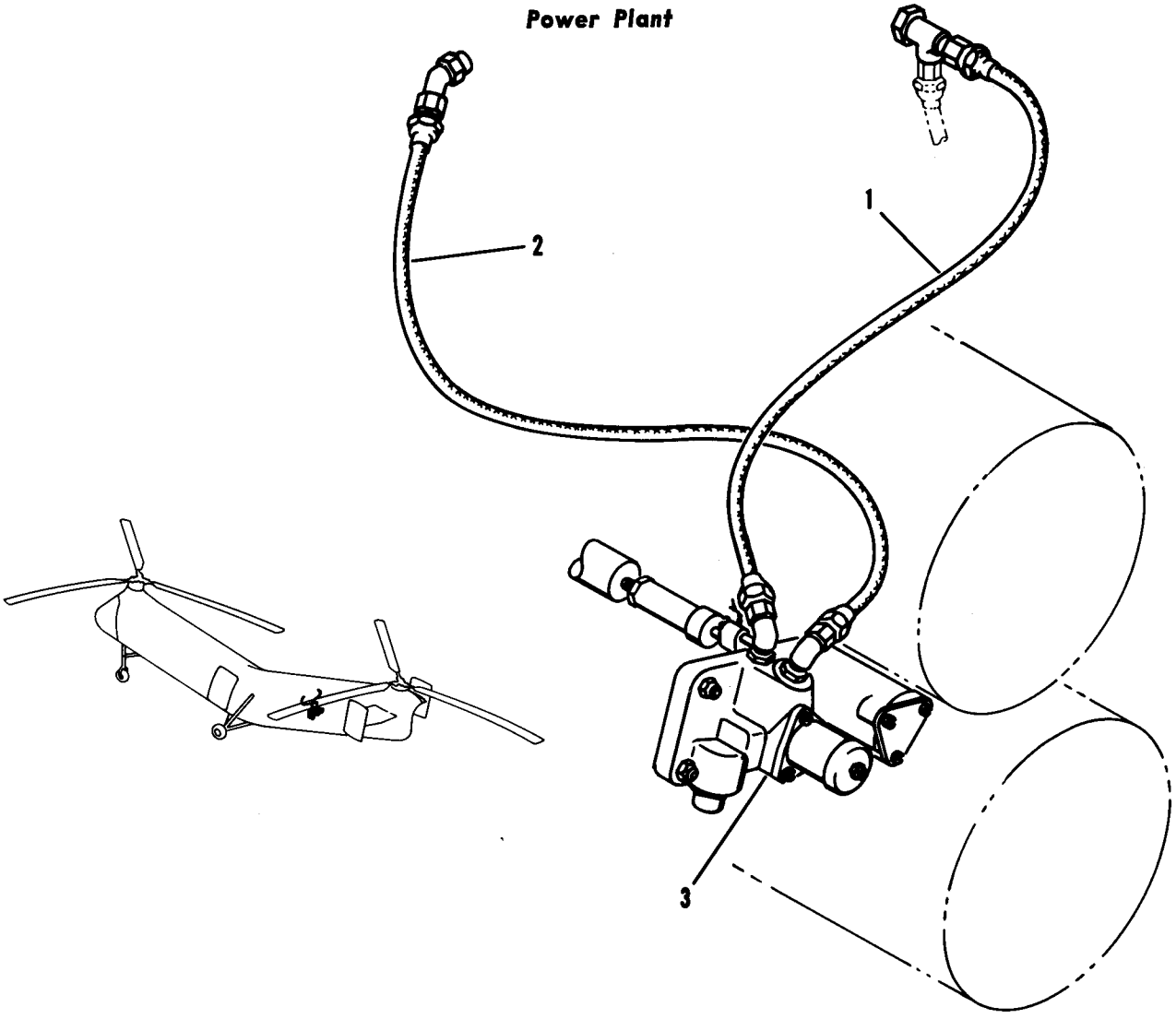

Figure 35. Supercharger Clutch Control Actuator

Figure and Index Number	Part Number	Description 1 2 3 4 5 6 7	Units per Assembly	Usable On Code
35-	22C2610-1	ACTUATOR INSTALLATION, Supercharger clutch control	1	
	AN912-3	. BUSHING	1	
	22P3083-1	. TEE	1	
-1	MS28741-4-0135	. HOSE ASSEMBLY, Oil pressure	1	
	AN837-4	. ELBOW	1	
	AN924-4	. NUT	1	
	MS29512-4	. GASKET	1	
-2	MS28741-4-0275	. HOSE ASSEMBLY, Oil return	1	
	AN837-4	. ELBOW	1	
	AN823-4	. ELBOW	1	
	AN924-4	. NUT	1	
	MS29512-4	. GASKET	1	
	AN912-3	. BUSHING	1	
-3	25805	. ACTUATOR, Supercharger (AP)	1	
	or			
	25805-2	. ACTUATOR, Supercharger (AP)	1	
	or			
	1359-527896	. ACTUATOR, Supercharger (PA)	1	

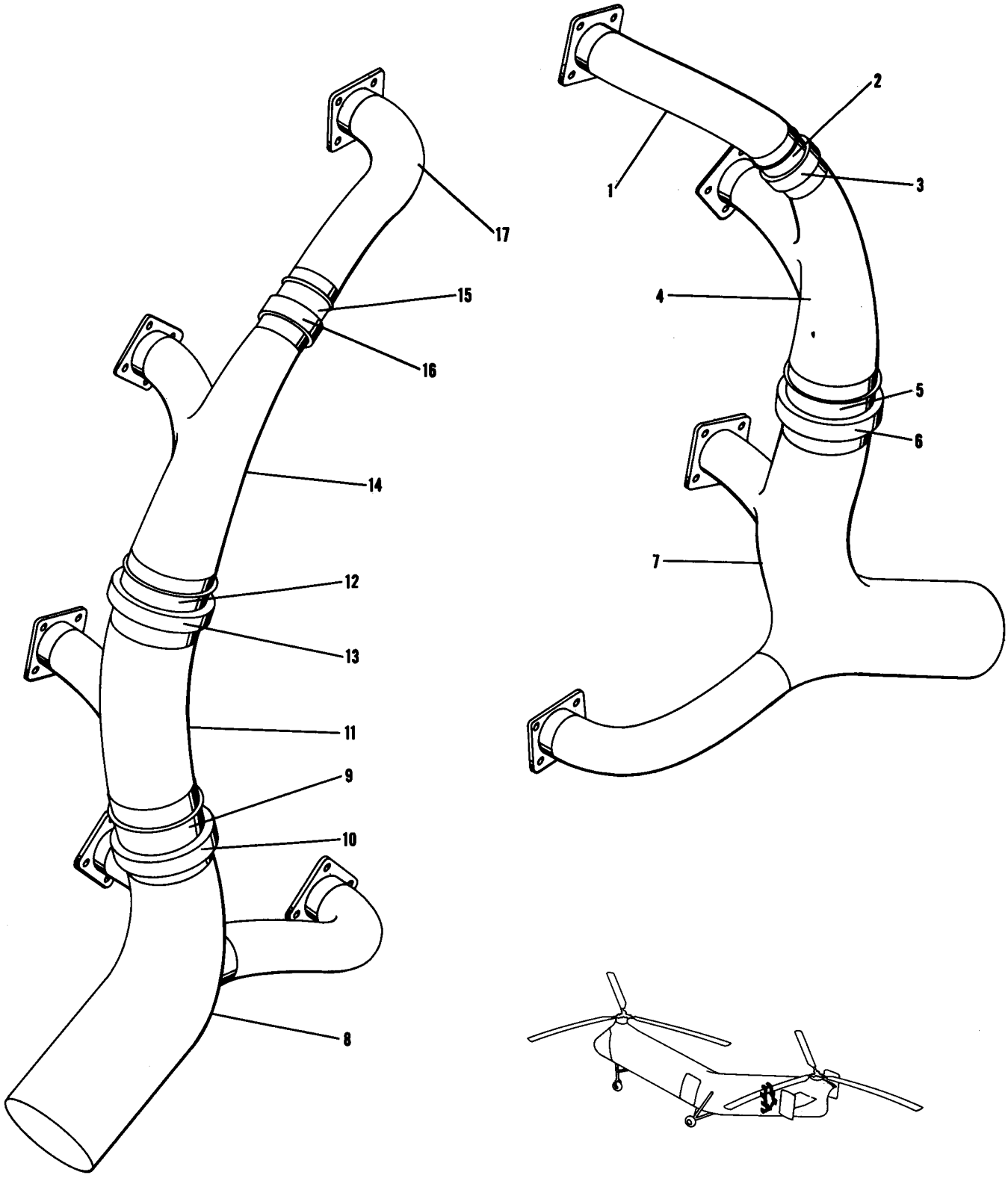

Figure 36. Exhaust Collector

Figure and Index Number	Part Number	Description 1 2 3 4 5 6 7	Units per Assembly	Usable On Code
36-	60123A	COLLECTOR ASSEMBLY, Engine exhaust (RYA)	1	
	or			
	60123	COLLECTOR ASSEMBLY, Engine exhaust (RYA)	1	
		Attaching Parts		
	0524AK10	NUT (DLR)	36	
	AN960C516	WASHER	36	
		***		
-1	60123-3	. WELD ASSEMBLY, Cyl No. 2 (RYA)	1	
-2	21877-21	. FLANGE, Slip joint (RYA)	1	
-3	43453-3.110-1	. CLAMP (MAR)	1	
-4	60123-5	. WELD ASSEMBLY, Cyl No. 3 (RYA)	1	
-5	21877-43	. FLANGE, Slip joint (RYA)	1	
-6	43453-4.301-1	. CLAMP (MAR)	1	
-7	60123-111	. WELD ASSEMBLY, Cyl No. 4 and 5 (RYA) (used with 60123A)	1	
	60123-107	. WELD ASSEMBLY, Cyl No. 4 and 5 (RYA) (used with 60123)	1	
-8	60123-113	. WELD ASSEMBLY, Cyl No. 6 and 7 (RYA) (used with 60123A)	1	
	60123-109	. WELD ASSEMBLY, Cyl No. 6 and 7 (RYA) (used with 60123)	1	
-9	21877-44	. FLANGE, Slip joint (RYA)	1	
-10	43453-4.961-1	. CLAMP (MAR)	1	
-11	60123-11	. WELD ASSEMBLY, Cyl No. 8 (RYA)	1	
-12	21877-43	. FLANGE, Slip joint (RYA)	1	
-13	43453-4.301-1	. CLAMP (MAR)	1	
-14	60123-13	. WELD ASSEMBLY, Cyl No. 9 (RYA)	1	
-15	21877-21	. FLANGE, Slip joint (RYA)	1	
■ -16	43453-3.110-1	. CLAMP (MAR)	1	
-17	60123-15	. WELD ASSEMBLY, Cyl No. 1 (RYA)	1	

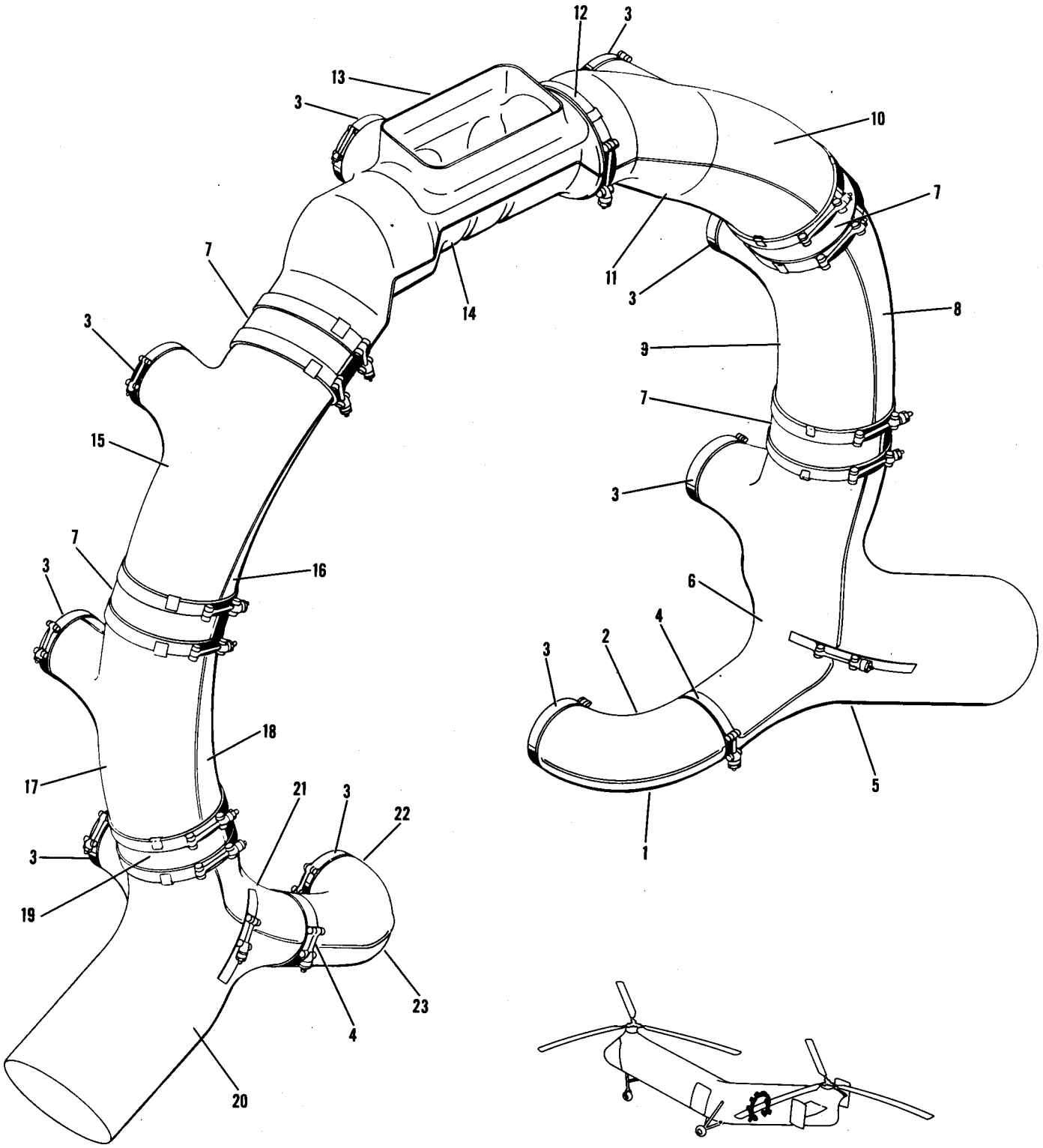

Figure 37. Exhaust Collector Shroud

Figure and Index Number	Part Number	Description 1 2 3 4 5 6 7	Units per Assembly	Usable On Code
37-	60500-300	SHROUD ASSEMBLY, Exhaust collector (RYA)	1	J,HJ
	or			
	60500-200	SHROUD ASSEMBLY, Exhaust collector (RYA)	1	J,HJ
	or			
	60500-100	SHROUD ASSEMBLY, Exhaust collector (RYA)	1	J,HJ
	60500-400	SHROUD ASSEMBLY, Exhaust collector (RYA)	1	HI
-1	60500-3	. SHROUD SUBASSEMBLY (RYA)	1	
-2	60500-279	. SHROUD SUBASSEMBLY (RYA) (Used with 60500-300)	1	
	60500-5	. SHROUD SUBASSEMBLY (RYA) (Used with 60500-200 and -100)	1	
-3	320C.625-4.125M	. CLAMP (MAR)	9	
-4	320C.625-4.225M	. CLAMP (MAR)	2	
-5	60500-281	. SHROUD SUBASSEMBLY (RYA) (Used with 60500-300)	1	
	60500-272	. SHROUD SUBASSEMBLY (RYA) (Used with 60500-200)	1	
	60500-7	. SHROUD SUBASSEMBLY (RYA) (Used with 60500-100)	1	
-6	60500-283	. SHROUD SUBASSEMBLY (RYA) (Used with 60500-300)	1	
	60500-11	. SHROUD SUBASSEMBLY (RYA) (Used with 60500-200 and -100)	1	
-7	60211	. CLAMP ASSEMBLY (RYA)	4	
	or			
	17117	. CLAMP ASSEMBLY (MAR)	4	
-8	60500-13	. SHROUD SUBASSEMBLY (RYA)	1	
-9	60500-285	. SHROUD SUBASSEMBLY (RYA) (Used with 60500-300)	1	
	60500-15	. SHROUD SUBASSEMBLY (RYA) (Used with 60500-200 and -100)	1	
-10	60500-317	. SHROUD SUBASSEMBLY (RYA)	1	
-11	60500-287	. SHROUD SUBASSEMBLY (RYA) (Used with 60500-300)	1	
	60500-319	. SHROUD SUBASSEMBLY (RYA) (Used with 60500-200 and -100)	1	
-12	320C.750-5.625M	. CLAMP (MAR)	1	
-13	60500-21	. SHROUD SUBASSEMBLY (RYA)	1	J,HJ
	60500-333	. SHROUD SUBASSEMBLY (RYA)	1	HI
-14	60500-23	. SHROUD SUBASSEMBLY (RYA)	1	
-15	60500-25	. SHROUD SUBASSEMBLY (RYA)	1	
-16	60500-289	. SHROUD SUBASSEMBLY (RYA) (Used with 60500-300)	1	
	60500-27	. SHROUD SUBASSEMBLY (RYA) (Used with 60500-200 and -100)	1	
-17	60500-29	. SHROUD SUBASSEMBLY (RYA)	1	
-18	60500-291	. SHROUD SUBASSEMBLY (RYA) (Used with 60500-300)	1	
	60500-31	. SHROUD SUBASSEMBLY (RYA) (Used with 60500-200 and -100)	1	
-19	60211-10	. CLAMP ASSEMBLY (RYA)	1	
-20	60500-293	. SHROUD SUBASSEMBLY (RYA) (Used with 60500-300)	1	
	60500-33	. SHROUD SUBASSEMBLY (RYA) (Used with 60500-200 and -100)	1	
-21	60500-295	. SHROUD SUBASSEMBLY (RYA) (Used with 60500-300)	1	
	60500-35	. SHROUD SUBASSEMBLY (RYA) (Used with 60500-200 and -100)	1	
-22	60500-297	. SHROUD SUBASSEMBLY (RYA) (Used with 60500-300)	1	
	60500-39	. SHROUD SUBASSEMBLY (RYA) (Used with 60500-200 and -100)	1	
-23	60500-41	. SHROUD SUBASSEMBLY (RYA)	1	

Power Plant

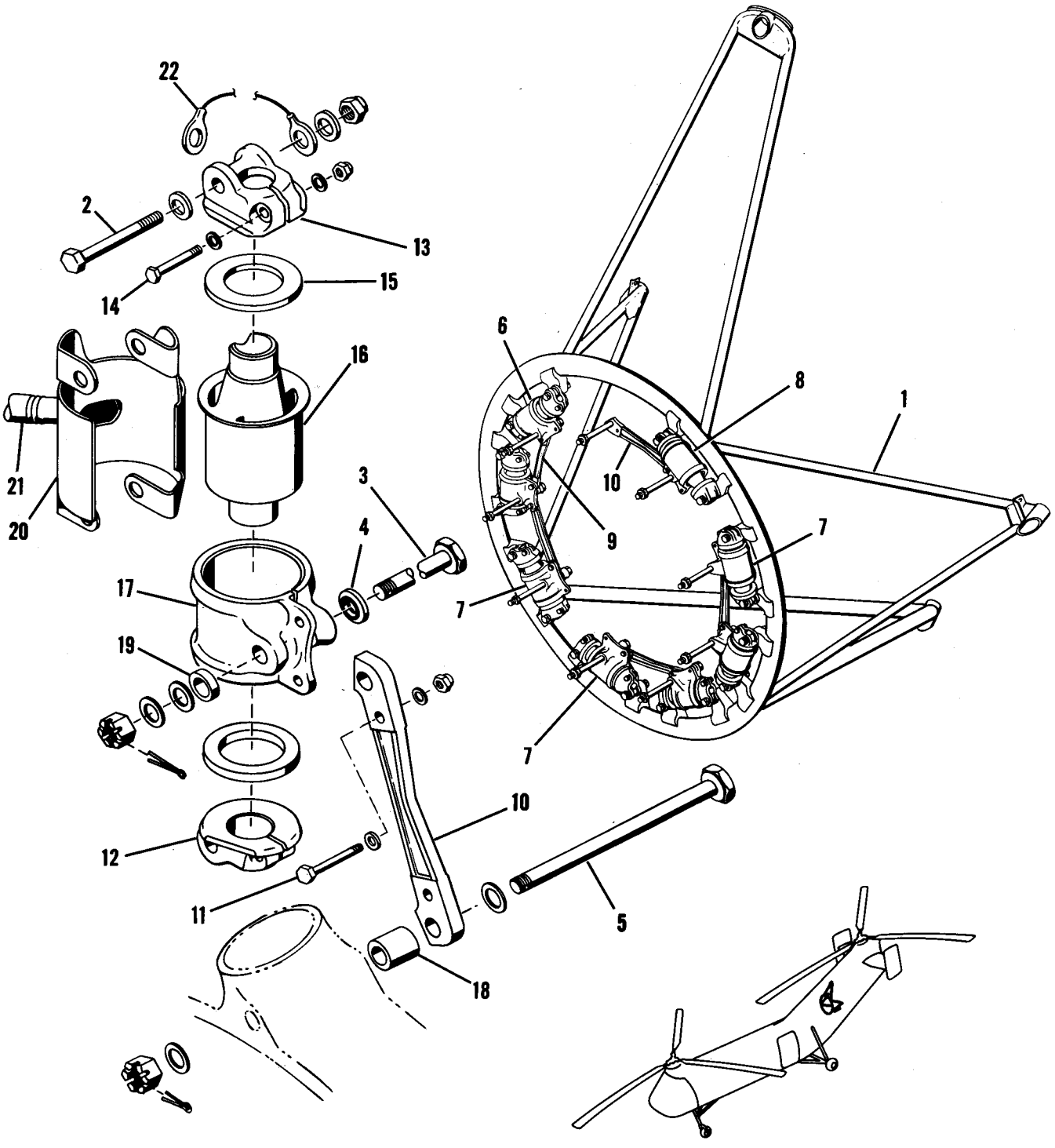

Figure 38. Engine Mount with Eight Dynafocals

Figure and Index Number	Part Number	Description 1 2 3 4 5 6 7	Units per Assembly	Usable On Code
38-1	22P7001-25	MOUNT ASSEMBLY, Engine	1	
	or			
	22P7001-50	MOUNT ASSEMBLY, Engine	1	
	or			
	22P7001-1	MOUNT ASSEMBLY, Engine (must be modified to 22P7001-50)	Ref	
	RC-27K	SUSPENSION ASSEMBLY, 8-dynafocal system (LO)	1	
		Attaching Parts		
-2	RC-27-21	BOLT (LO) (AN7-20A)	16	
	RC-27-31	NUT (LO) (AN365-720)	16	
	RC-27-23	WASHER (LO)	28	
	AN960-716	WASHER	4	
-3	RC-27-7	BOLT (LO) (AN9-64)	8	
	RC-27-10	PIN, Cotter (LO) (AN380C3-5)	8	
	RC-27-8	NUT (LO) (AN355-9)	8	
-4	RC-27-11	WASHER (LO)	8	
	RC-27-9	WASHER (LO)	AR	
-5	RC-27-40	BOLT (LO) (Used with RC-27K-SA3)	1	
	RC-27-10	PIN, Cotter (LO) (AN380C3-5)	1	
	RC-27-8	NUT (LO) (AN355-9)	1	
	RC-27-9	WASHER (LO)	2	
		———*———		
-6	RC-27K-SA1	. MOUNTING SUBASSEMBLY, Single (LO)	1	
-7	RC-27K-SA2	. MOUNTING SUBASSEMBLY, Double (LO)	3	
-8	RC-27K-SA3	. MOUNTING SUBASSEMBLY, Single (LO)	1	
-9	RC-27-3	. . BAR, Single (LO) (Used with RC-27K-SA1)	1	
-10	RC-27-2	. . BAR, Double (LO) (Used with RC-27K-SA2 and RC-27K-SA3)	1	
		Attaching Parts		
-11	RC-27-14	. . BOLT, Bar (LO) (AN4-11A)	1	
	RC-27-15	. . NUT (LO) (AN365-428)	1	
	RC-27-16	. . WASHER (LO)	2	
		———*———		
-12	RC-27-19	. . PLATE, End (LO)	1	
-13	RC-27-20	. . PLATE, End (LO)	1	
		Attaching Parts		
-14	RC-27-25	. . BOLT, End plate (LO) (AN4-15A)	1	
	RC-27-15	. . NUT (LO) (AN365-428)	1	
	RC-27-16	. . WASHER (LO)	2	
		———*———		
-15	RC-27-6	. . WASHER, Snubbing (LO)	2	
-16	RC-27-30	. . MOUNTING, Tube form (LO)	1	
-17	RC-27-17	. . BRACKET, Mounting (LO)	1	
-18	RC-27-26	. SPACER (LO) (Used with RC-27K-SA1)	1	
-19	22P1041-1	SPACER	8	
	22P1052-2	SHIELD INSTALLATION, Dynafocal	1	
	22P1053-1	. BLAST TUBE AND SHIELD ASSEMBLY, Dynafocal	7	
	22P1053-2	. BLAST TUBE AND SHIELD ASSEMBLY, Dynafocal	1	
		Attaching Parts		
	AN515-6R8	. SCREW	3	
	AN365-632	. NUT	3	
	AN960D6	. WASHER	6	
	22P1053-6	. WASHER (Used with 22P1053-2)	1	
		———*———		
-20	22P1053-7	. . SHIELD, Dynafocal	1	
-21	22P1054-2	. . FLEXIBLE DUCT (Used with 22P1053-2)	1	
	or			
	22P1054-1	. . FLEXIBLE DUCT (Used with 22P1053-2)	1	
	22P1055-2	. . FLEXIBLE DUCT (Used with 22P1053-1)	1	
	or			
	22P1055-1	. . FLEXIBLE DUCT (Used with 22P1053-1)	1	
	AN742D22C	. CLAMP	1	
	AN742D11C	. CLAMP	1	
-22	22P1043-1	JUMPER, Engine dynafocal bonding, see figure 28*	Ref	

*For proper usable on codes and complete breakdown, refer to figure number as indicated.

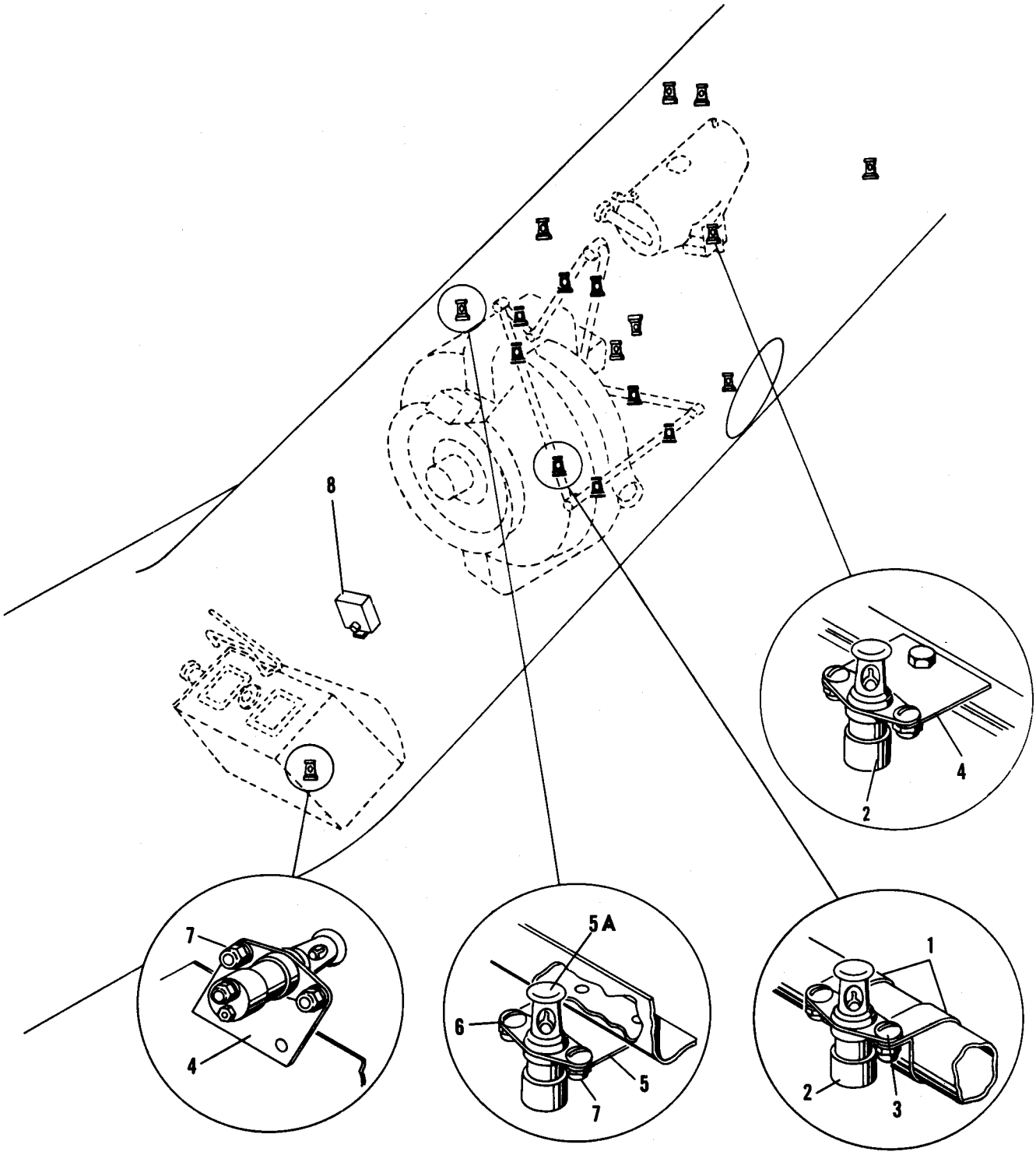

Figure 39. Fire Detectors

Figure and Index Number	Part Number	Description 1 2 3 4 5 6 7	Units per Assembly	Usable On Code
39-	22E8002-1	DETECTOR INSTALLATION, Fire (demountable with engine)	1	
-1	22E8002-12	. CLAMP	8	
	22E8002-13	. CLAMP	4	
	22E8002-14	. CLAMP	4	
-2	35534-2 or	. DETECTOR (EDI)	8	
	36010-2	. DETECTOR (EDI)	8	
		Attaching Parts		
-3	AN515-8-8	. SCREW	2	
	AN364-832	. NUT	2	
	AN960D8	. WASHER	2	
		***		
	22E8002-2	DETECTOR INSTALLATION, Fire (fuselage)	1	
-4	22E8002-11	. CLIP	6	
	22E8002-9	. CLIP	3	
-5	22E8002-10	. BRACKET	1	
-5A	35534-2 or	. DETECTOR (EDI)	10	
	36010-2	. DETECTOR (EDI)	10	
		Attaching Parts		
-6	AN515-8-6	. SCREW	2	
-7	AN364-832	. NUT	2	
	AN960D8	. WASHER	2	
		***		
-8	34368-D	CONTROL ASSEMBLY, Fire detector (EDI)	1	
		Attaching Parts		
	AN3DD3A	BOLT	4	
		***		

Drive

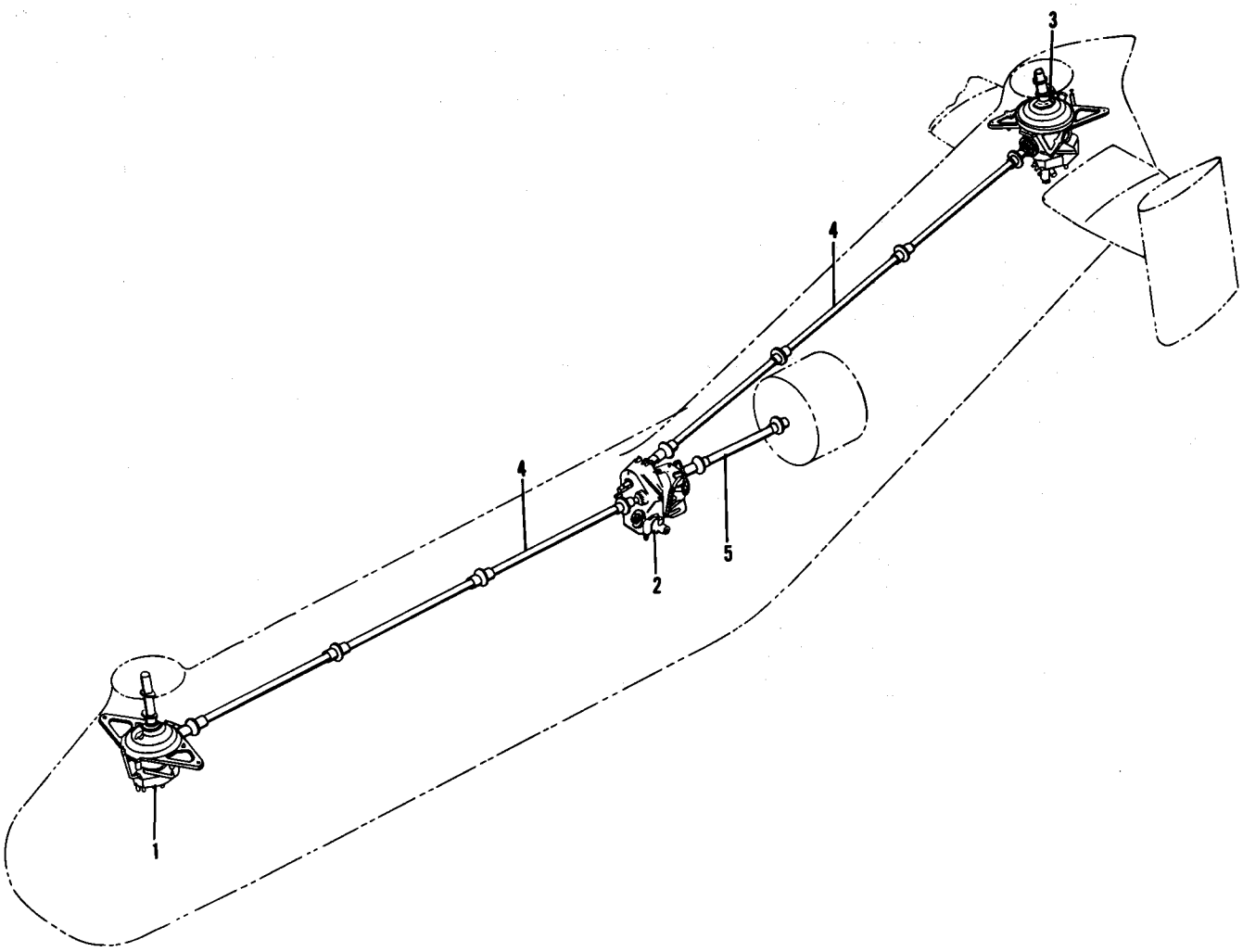

Figure 40. Drive System

Figure and Index Number	Part Number	Description 1 2 3 4 5 6 7	Units per Assembly	Usable On Code
40-	22D0001-1	DRIVE SYSTEM, Rotor	1	J
	42D0001-1	DRIVE SYSTEM, Rotor	1	AU
-1	22D2001	. TRANSMISSION ASSEMBLY, Fwd rotor, see fig. 42*	Ref	
	42D2001	. TRANSMISSION ASSEMBLY, Fwd rotor, see fig. 42*	Ref	
-2	22D1001	. TRANSMISSION AND CLUTCH ASSEMBLY, Central, see fig. 41*	Ref	
	42D1001	. TRANSMISSION AND CLUTCH ASSEMBLY, Central, see fig. 41*	Ref	
-3	22D2001	. TRANSMISSION ASSEMBLY, Aft rotor, see fig. 43*	Ref	
	42D2001	. TRANSMISSION ASSEMBLY, Aft rotor, see fig. 43*	Ref	
-4	22D3001	. SHAFTING ASSEMBLY, Drive, see fig. 44*	Ref	
-5	42D3001-2	. SHAFT ASSEMBLY, Engine drive, see fig. 45	Ref	

*For proper usable on codes and complete breakdown, see figure number as indicated.

Drive

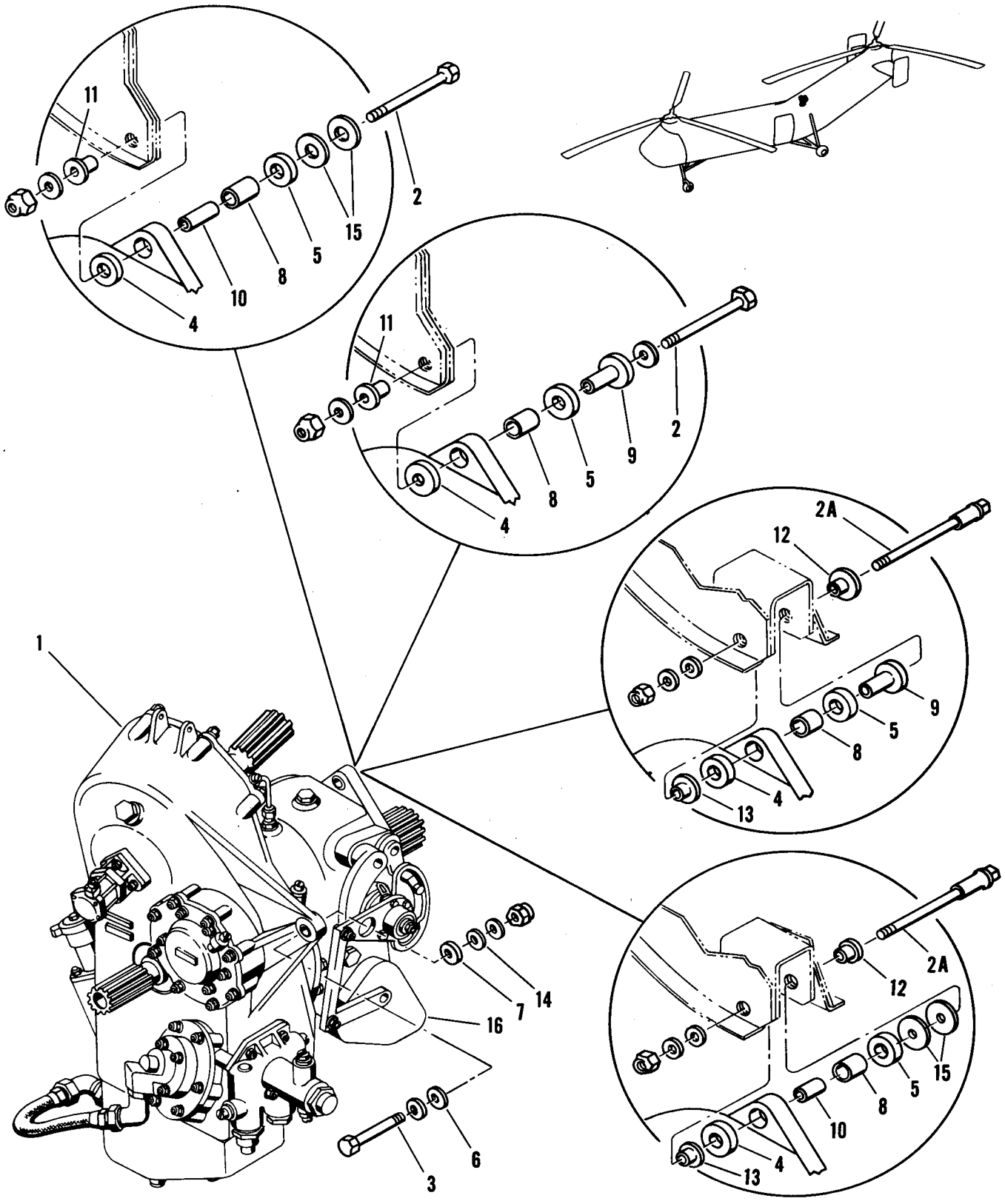

Figure 41. Central Transmission and Clutch

Figure and Index Number	Part Number	Description 1 2 3 4 5 6 7	Units per Assembly	Usable On Code
41-1	22D1001-1	TRANSMISSION AND CLUTCH ASSEMBLY, Central (must be modified to 22D1001-17), see Central Trans and Clutch Assy Illustrated Parts Breakdown T.O. 1HA2-4-3-4 (formerly AN 03-95A-24)	Ref	
	22D1001-11	TRANSMISSION AND CLUTCH ASSEMBLY, Central (must be modified to 22D1001-17), see Central Trans and Clutch Assy Illustrated Parts Breakdown T.O. 1HA2-4-3-4 (formerly AN 03-95A-24)	Ref	
	22D1001-17*	TRANSMISSION AND CLUTCH ASSEMBLY, Central (modified 22D1001-1 or -11), see Central Trans and Clutch Assy Illustrated Parts Breakdown T.O. 1HA2-4-3-4 (formerly AN 03-95A-24)	1	J
	22D1001-14	TRANSMISSION AND CLUTCH ASSEMBLY, Central (must be modified to 22D1001-18), see Central Trans and Clutch Assy Illustrated Parts Breakdown T.O. 1HA2-4-3-4 (formerly AN 03-95A-24)	Ref	
	22D1001-18*	TRANSMISSION AND CLUTCH ASSEMBLY, Central (modified 22D1001-14), see Central Trans and Clutch Assy Illustrated Parts Breakdown T.O. 1HA2-4-3-4 (formerly AN 03-95A-24)	1	J
	22D1001-13*	TRANSMISSION AND CLUTCH ASSEMBLY, Central (must be modified to 22D1001-16), see Central Trans and Clutch Assy Illustrated Parts Breakdown T.O. 1HA2-4-3-4 (formerly AN03-95A-24)	1	J
	22D1001-16*	TRANSMISSION AND CLUTCH ASSEMBLY, Central, see Central Trans and Clutch Assy Illustrated Parts Breakdown T.O. 1HA2-4-3-4 (formerly AN 03-95A-24)	1	J
	42D1001-10*	TRANSMISSION AND CLUTCH ASSEMBLY, Central, see Central Trans and Clutch Assy Illustrated Parts Breakdown T.O. 1HA2-4-3-4 (formerly AN 03-95A-24)	1	
	42D1001-13*	TRANSMISSION AND CLUTCH ASSEMBLY, Central, see Central Trans and Clutch Assy Illustrated Parts Breakdown T.O. 1HA2-4-3-4 (formerly AN 03-95A-24)	1	
	42D1001-18*	TRANSMISSION AND CLUTCH ASSEMBLY, Central, see Central Trans and Clutch Assy Illustrated Parts Breakdown T.O. 1HA2-4-3-4 (formerly AN 03-95A-24)	1	
	42D1001-20	TRANSMISSION AND CLUTCH ASSEMBLY, Central, see Central Trans and Clutch Assy Illustrated Parts Breakdown T.O. 1HA2-4-3-4 (formerly AN 03-95A-24) (use R-446 (ARBN) actuator only)	1	
	42D1001-21*	TRANSMISSION AND CLUTCH ASSEMBLY, Central, see Central Trans and Clutch Assy Illustrated Parts Breakdown T.O. 1HA2-4-3-4 (formerly AN 03-95A-24)	1	
	42D1001-22*	TRANSMISSION AND CLUTCH ASSEMBLY, Central, see Central Trans and Clutch Assy Illustrated Parts Breakdown T.O. 1HA2-4-3-4 (formerly AN 03-95A-24)	1	
		Attaching Parts		
-2	AN6-23	BOLT (Used with cantilever type mount)	1	
-2A	42D1090-1	BOLT (Used with straddle type mount)	1	
-3	AN8-31	BOLT	2	J,HJ
	AN8-36A	BOLT	2	HI
	AN365-624	NUT	1	
	AN365-820	NUT	2	
-4	42D1072-1	SPACER	1	
-5	42D1073-1	SPACER	1	
-6	42D1069-1	SPACER (Used with AN8-31 or AN8-36A bolt)	2	
-7	42D1068-1	SPACER (Used with AN8-31 or AN8-36A bolt)	2	
-8	42D1071-1	INSERT (Used with AN6-23 or 42D1090-1 bolt)	1	
-9	42D1096-1 or	BUSHING (Used with AN6-23 or 42D1090-1 bolt)	1	
-10	42D1070-1	BUSHING (Used with AN970-6 washers)	1	
-11	42S5222-1	BUSHING (Used with cantilever type mount) see fig. 11	Ref	
-12	42S5076-2	BUSHING (Used with straddle type mount) see fig. 11	Ref	
-13	42S5074-1	BUSHING (Used with straddle type mount) see fig. 11	Ref	
-14	42D1067-1	WASHER (Used with AN8-31 or AN8-36A bolt)	2	

*See the Usable On Code for the clutch actuators since electrical wiring restricts actuator usage. It may be necessary to change actuators to make the transmission suitable for installation.

Figure and Index Number	Part Number	Description 1 2 3 4 5 6 7	Units per Assembly	Usable On Code
41-15	AN970-6	WASHER (Used with 42D1070-1 bushing)	2	
	AN960-616	WASHER (Under nut, used with AN6-23 bolt)	AR	
	or			
	AN960-616L	WASHER (Under nut, used with AN6-23 bolt)	AR	
	AN960-616	WASHER (Used under hd of AN6-23 bolt when 42D1096-1 bushing is installed)	1	
	AN960-616	WASHER (Under nut, used with 42D1090-1 bolt)	2	
	AN960-816	WASHER (Under nut, used with AN8-31 or AN8-36A bolt)	AR	
	or			
	AN960-816L	WASHER (Under nut, used with AN8-31 or AN8-36A bolt)	AR	
	AN960D816	WASHER (Under hd, used with AN8-31 or AN8-36A bolt)	2	
		*—		
-16	31708-3	. ACTUATOR, Clutch (AIR)	1	B
	or			
	31708-2	. ACTUATOR, Clutch (AIR)	1	B
	or			
	31708-1	. ACTUATOR, Clutch (AIR)	1	B
	or			
	31708	. ACTUATOR, Clutch (AIR)	1	B
	R-270M2-4M3	. ACTUATOR, Clutch (ARBN)	1	A
	or			
	R-270M2-4M2	. ACTUATOR, Clutch (ARBN)	1	A
	or			
	R-270M2-4M1	. ACTUATOR, Clutch (ARBN)	1	A
	R-446	. ACTUATOR, Clutch (ARBN)	1	B
	38162-2	. ACTUATOR, Clutch (AIR)	1	B
	or			
	38162	. ACTUATOR, Clutch (AIR)	1	B
	AN752-1-6	JUMPER, Bonding	1	

Drive

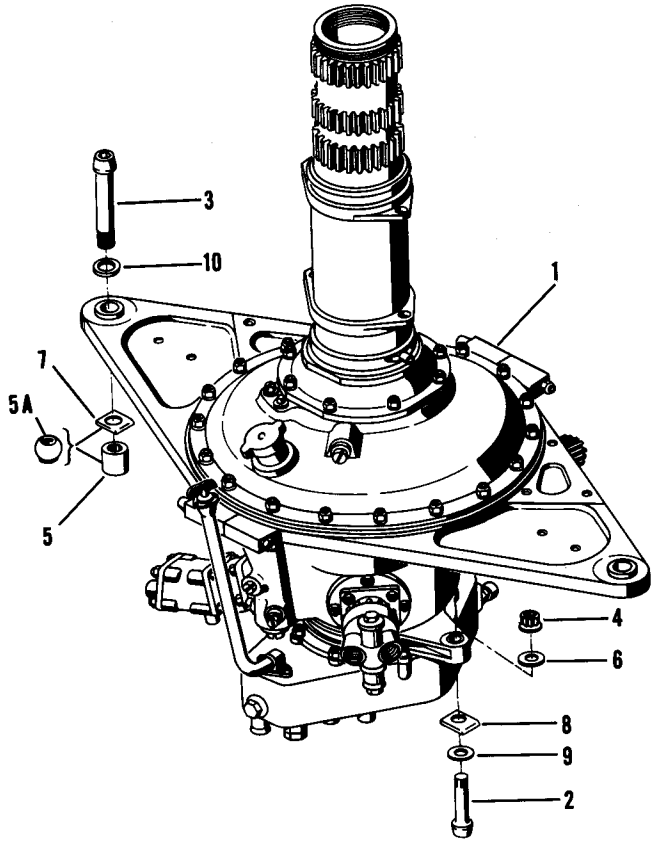

Figure 42. Forward Transmission

Figure and Index Number	Part Number	Description 1 2 3 4 5 6 7	Units per Assembly	Usable On Code
42-1	22D2001-1	TRANSMISSION ASSEMBLY, Fwd rotor (must be modified to 22D2001-5), see Fwd Rotor Trans Assy Illustrated Parts Breakdown T.O. 1HA2-2-3-14 (formerly AN 03-95A-26)	Ref	
	22D2001-5	TRANSMISSION ASSEMBLY, Fwd rotor (modified 22D2001-1), see Fwd Rotor Trans Assy Illustrated Parts Breakdown T.O. 1HA2-2-3-14 (formerly AN 03-95A-26)	1	J
	42D2001-1	TRANSMISSION ASSEMBLY, Fwd rotor (must be modified to 42D2001-3), see Fwd Rotor Trans Assy Illustrated Parts Breakdown T.O. 1HA2-2-3-14 (formerly AN 03-95A-26)	Ref	
	42D2001-3	TRANSMISSION ASSEMBLY, Fwd rotor (modified 42D2001-1), see Fwd Rotor Trans Assy Illustrated Parts Breakdown T.O. 1HA2-2-3-14 (formerly AN 03-95A-26)	1	
	42D2001-7	TRANSMISSION ASSEMBLY, Fwd rotor, see Fwd Rotor Trans Assy Illustrated Parts Breakdown T.O. 1HA2-2-3-14 (formerly AN 03-95A-26)	1	
		Attaching Parts		
-2	NAS152-69	BOLT	2	
-3	NAS156-78	BOLT	2	J,AV
	NAS156-73	BOLT	2	I
-4	EB-126	NUT (EN)	2	
-5	NAS443-16	NUT	2	J,AV
-5A	2752-164	NUT (EN) (Not used on helicopters 52-8613, 52-8614, 52-8665, and 52-8666)	2	I

Figure and Index Number	Part Number	1 2 3 4 5 6 7 Description	Units per Assembly	Usable On Code
42-	42D0001-50	NUT (Used on helicopters 52-8613, 52-8614, and 52-8666)	2	
	42D0001-50	NUT, RH side (used on helicopter 52-8665)	1	
	42D2082-1	NUT, LH side (used on helicopter 52-8665)	1	
-6	AN960-1216	WASHER	2	
-7	22D2118-1	WASHER	2	J,AV
-8	22D2117-1	WASHER, LH	1	A,ET
	22D2117-3	WASHER, LH	1	BE
	22D2117-5	WASHER, LH	1	D,CH
	22D2117-2	WASHER, RH	1	A,ET
	22D2117-4	WASHER, RH	1	BE
	22D2117-6	WASHER, RH	1	D,CH
-9	NAS143-12C	WASHER	2	
-10	NAS143-16C	WASHER	2	

*

Drive

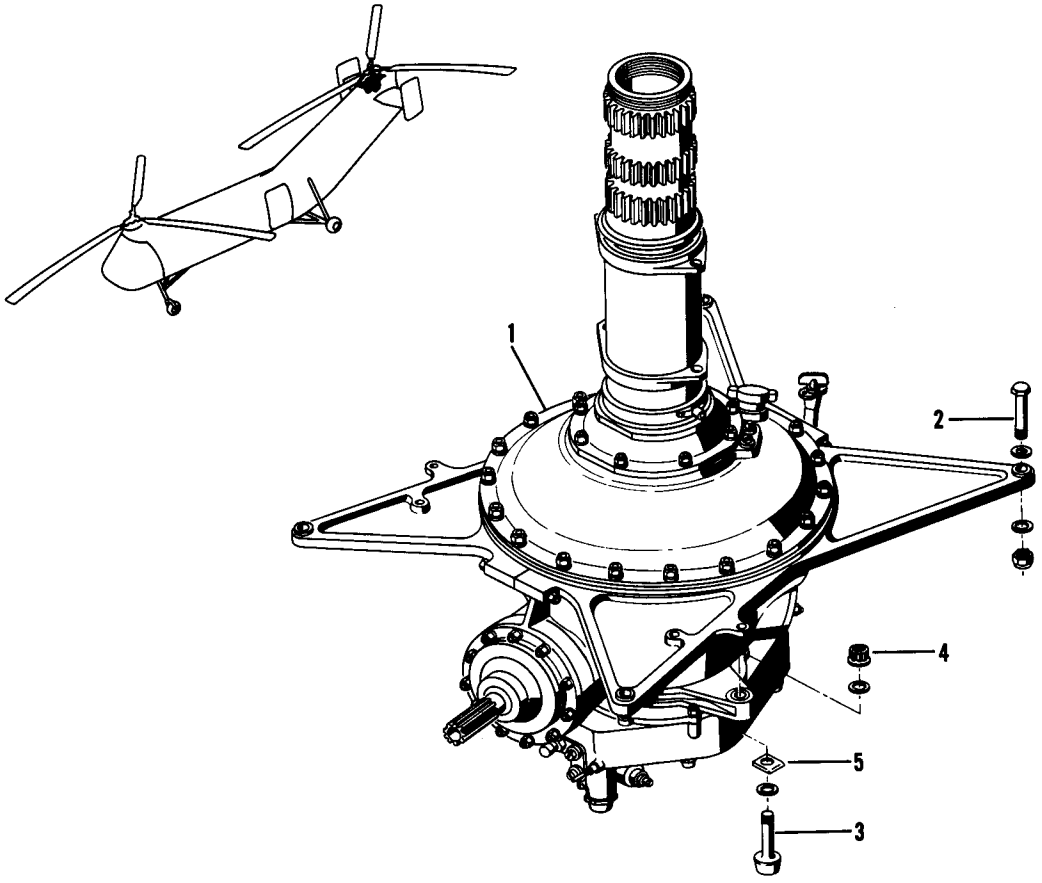

Figure 43. Aft Transmission

Figure and Index Number	Part Number	Description 1 2 3 4 5 6 7	Units per Assembly	Usable On Code
43-1	22D2001-2	TRANSMISSION ASSEMBLY, Aft rotor (must be modified to 22D2001-6), see Aft Rotor Trans Assy Illustrated Parts Breakdown T.O. 1HA2-2-3-14 (formerly AN 03-95A-26)	Ref	
	22D2001-6*	TRANSMISSION ASSEMBLY, Aft rotor (may be modified to 22D2001-12), see Aft Rotor Trans Assy Illustrated Parts Breakdown T.O. 1HA2-2-3-14 (formerly AN 03-95A-26)	1	J
	22D2001-12**	TRANSMISSION ASSEMBLY, Aft rotor (may be modified to 22D2001-6), see Aft Rotor Trans Assy Illustrated Parts Breakdown T.O. 1HA2-2-3-14 (formerly AN 03-95A-26)	1	J
	42D2001-2	TRANSMISSION ASSEMBLY, Aft rotor (must be modified to 42D2001-4), see Aft Rotor Trans Assy Illustrated Parts Breakdown T.O. 1HA2-2-3-14 (formerly AN 03-95A-26)	Ref	
	42D2001-4*	TRANSMISSION ASSEMBLY, Aft rotor (may be modified to 42D2001-6), see Aft Rotor Trans Assy Illustrated Parts Breakdown T.O. 1HA2-2-3-14 (formerly AN 03-95A-26)	1	

*These transmissions to be used with 22C1707-1 bellcrank support assemblies.
**These transmissions to be used with 22C1707-5 and -6 bellcrank support assemblies.

Figure and Index Number	Part Number	Description 1 2 3 4 5 6 7	Units per Assembly	Usable On Code
43-	42D2001-6**	TRANSMISSION ASSEMBLY, Aft rotor (may be modified to 42D2001-4), see Aft Rotor Trans Assy Illustrated Parts Breakdown T.O. 1HA2-2-3-14 (formerly AN 03-95A-26)	1	
	42D2001-8	TRANSMISSION ASSEMBLY, Aft rotor, see Aft Rotor Trans Assy Illustrated Parts Breakdown T.O. 1HA2-2-3-14 (formerly AN 03-95A-26)	1	
		Attaching Parts		
-2	AN10-24A	BOLT	4	J
	AN10-26A	BOLT	4	FG
	AN10-27A	BOLT	4	FH
-3	NAS152-66	BOLT	2	
	AN365-1018	NUT	4	J,FG
	AN365-1018	NUT (Used at aft mounting points)	2	FH
	42D2059-1	NUT (Used at fwd mounting points)	2	FH
-4	EB-126	NUT (EN)	2	
	AN960-1016	WASHER (One under nut and bolt hd)	8	
	AN960-1216	WASHER (Used with NAS152-66 under nut)	2	
-5	22D2116-1	WASHER	2	J,DJ
	22D2116-4	WASHER	2	DK
	NAS143-12C	WASHER (Used with NAS152-66 under hd)	2	

*

**These transmissions to be used with 22C1707-5 and -6 bellcrank support assemblies.

Drive

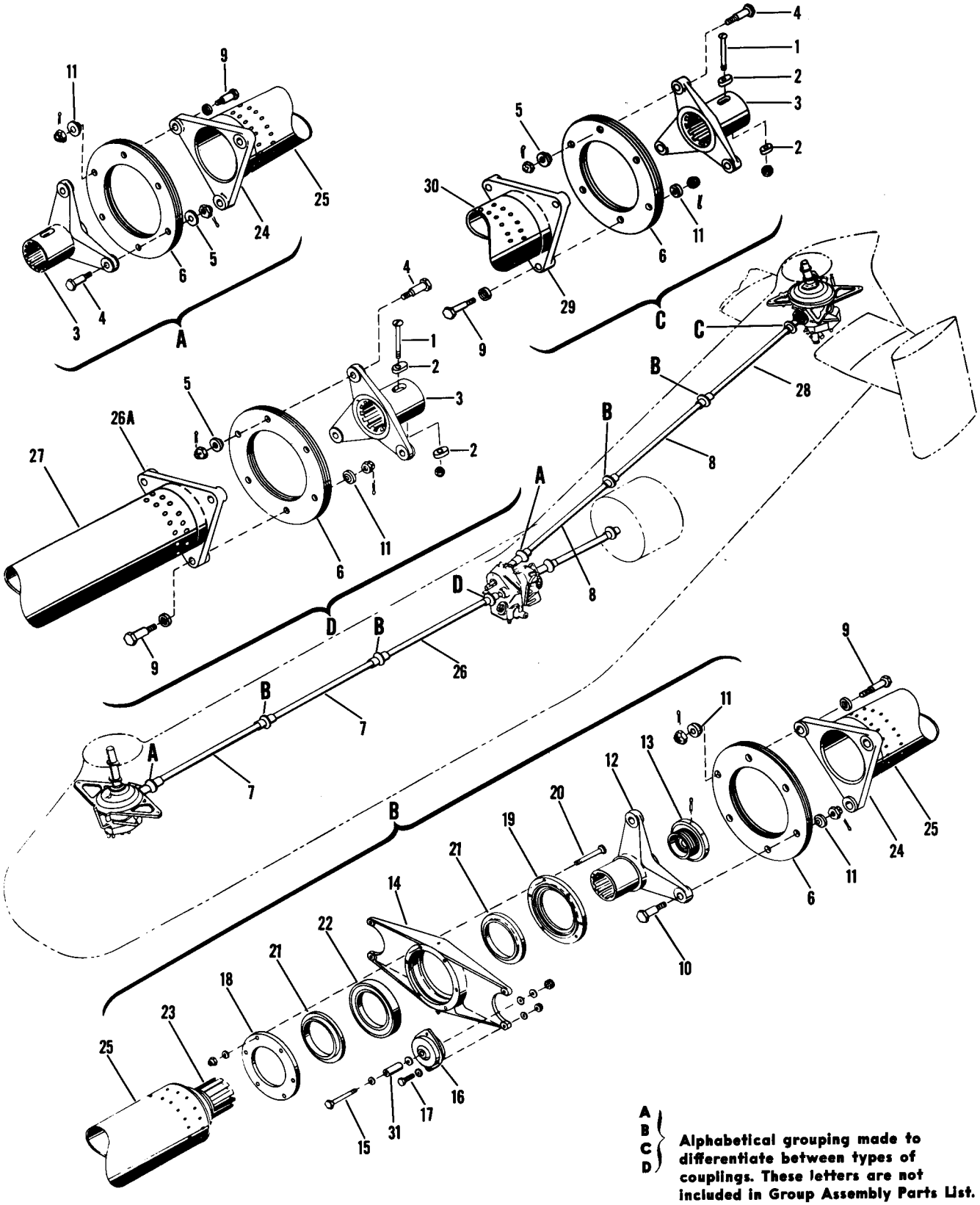

Figure 44. Drive Shafting

Figure and Index Number	Part Number	Description 1 2 3 4 5 6 7	Units per Assembly	Usable On Code
44-	22D3001-1	SHAFTING ASSEMBLY, Drive	1	J
	22D3001-2	SHAFTING ASSEMBLY, Drive	1	CW,DV
	22D3001-3	SHAFTING ASSEMBLY, Drive	1	BY,DU
		Attaching Parts		
-1	AN26-42A	BOLT	2	
	AN364-624	NUT	2	
-2	22D3043-1	KEY	4	
		———*———		
-3	22D3041-1	. ADAPTER	4	
		Attaching Parts		
-4	PHS10105-8-4	. BOLT (PHL)	3	
	or			
	PHS10105-8-2A	. BOLT (PHL)	3	
	AN310-7	. NUT (Used with PHS10105-8-2A)	3	J
	AN365-720	. NUT (Used with PHS10105-8-4)	3	AU
	AN381-3-12	. PIN, Cotter (used with PHS10105-8-2A)	3	J
-5	22D3045-1	. WASHER	3	
		———*———		
-6	22D3044-1	. PLATE ASSEMBLY (THM)	8	
	22D3044-2	. . PLATE (THM)	11	
	22D3044-3	. . PLATE (THM)	10	
-7	22D3046-15	. SHAFT ASSEMBLY, Transmission drive	2	
	or			
	22D3046-13	. SHAFT ASSEMBLY, Transmission drive	2	
	or			
	22D3046-9	. SHAFT ASSEMBLY, Transmission drive (may be modified to 22D3046-15)	2	
	or			
	22D3046-1	. SHAFT ASSEMBLY, Transmission drive (may be modified to 22D3046-13)	2	
-8	22D3046-16	. SHAFT ASSEMBLY, Transmission drive	2	
	or			
	22D3046-14	. SHAFT ASSEMBLY, Transmission drive	2	
	or			
	22D3046-8	. SHAFT ASSEMBLY, Transmission drive (may be modified to 22D3046-16)	2	
	or			
	22D3046-2	. SHAFT ASSEMBLY, Transmission drive (may be modified to 22D3046-14)	2	
		Attaching Parts		
-9	PHS10105-8-1A	. BOLT (PHL)	3	J
	PHS10105-8-3	. BOLT (PHL)	3	CW,DV
	PHS10105-8-6	. BOLT (PHL)	3	BY,DU
-10	PHS10105-8-4	. BOLT (PHL)	3	
	or			
	PHS10105-8-2A	. BOLT (PHL)	3	
	AN310-7	. NUT (Used with PHS10105-8-1A and -2A)	6	J
	AN365-720	. NUT (Used with PHS10105-8-3, -4, and -6)	6	AU
	AN381-3-12	. PIN, Cotter (used with PHS10105-1A and -2A)		J
-11	22D3045-1	. WASHER	6	
	AN960D816L	. WASHER (Used under PHS10105-8-1A, -3, and -6 bolt hd)	3	
		———*———		
-12	22D3054-1	. . ADAPTER, Splined drive shaft	1	
		Attaching Parts		
	AN381-3-8	. . PIN, Cotter	1	
-13	22D3055-2	. . RETAINER	1	
	or			
	22D3055-1	. . RETAINER	1	
		———*———		
-14	22D3050-1	. . HOUSING, Transmission drive shaft bearing	1	
		Attaching Parts		
-15	AN5-27A	. . BOLT	2	
	AN365-524	. . NUT	2	
	AN960D516	. . WASHER	8	
		———*———		

Figure and Index Number	Part Number	Description 1 2 3 4 5 6 7	Units per Assembly	Usable On Code
44-16	22D3046-7	. . MOUNTING	2	
		Attaching Parts		
-17	AN3-6A	. . BOLT	4	
	AN365D1032	. . NUT	4	
	AN960D10	. . WASHER	8	
		———*———		
-18	22D3052-1	. . SEAL (Used with 22D3046-1, -2, -13, and -14)	1	
-19	22D3052-2	. . SEAL (Used with 22D3046-1, -2, -13, and -14)	1	
	42D3062-1	. . SHIELD (Used with 22D3046-8, -9, -15, and -16)	2	
	or			
	22D3174-1	. . SHIELD (Used with 22D3046-8, -9, -15, and -16)	2	
		Attaching Parts		
-20	AN4-17A	. . BOLT (Used with 22D3052-1 and -2)	6	
	AN4-16A	. . BOLT (Used with 42D3062-1 and 22D3174-1)	6	
	AN365-428	. . NUT	6	
	AN960D416	. . WASHER (Used with 22D3052-1 and -2)	6	
	AN960D416	. . WASHER (One under head and two under nut used with 42D3062-1 and 22D3174-1)	18	
		———*———		
-21	22D3053-1	. . SEAL (Used with 22D3046-1, -2, -13, and -14)	2	
	22D3175-1	. . SPACER (Used with 22D3046-8, -9, -15, and -16)	2	
	22D3176-1	. . RETAINER (Used with 22D3046-8, -9, -15, and -16)	1	
-22	6913	. . BEARING (SKF)	1	
	MS15006-1	. . FITTING, Lubricator (used with 22D3046-1, -9, -13, and -15)	1	
	MS15006-4	. . FITTING, Lubricator (used with 22D3046-2, -8, -14, and -16)	1	
	22D3046-11	. . SHAFT SUBASSEMBLY (Used with 22D3046-1, -9, -13, and -15)	1	
	or			
	22D3046-3	. . SHAFT SUBASSEMBLY (Used with 22D3046-1, -9, -13, and -15)	1	
	22D3046-12	. . SHAFT SUBASSEMBLY (Used with 22D3046-2, -8, -14, and -16)	1	
	or			
	22D3046-4	. . SHAFT SUBASSEMBLY (Used with 22D3046-2, -8, -14, and -16)	1	
-23	22D3049-1	. . . ADAPTER	1	
-24	22D3047-3	. . . ADAPTER	1	
	or			
	22D3047-2	. . . ADAPTER	1	
	or			
	22D3047-1	. . . ADAPTER (May be modified to 22D3047-2 or -3)	1	
		Attaching Parts		
	AN470DD8	. . . RIVET	24	
		———*———		
	PHS40701-1	. . . WEIGHT, Drive shaft balancing (PHL)	AR	
	PHS40701-2	. . . WEIGHT, Drive shaft balancing (PHL)	AR	
	PHS40701-3	. . . WEIGHT, Drive shaft balancing (PHL)	AR	
	PHS40701-4	. . . WEIGHT, Drive shaft balancing (PHL)	AR	
		Attaching Parts		
	CKL-P5G	. . . RIVET (HKM)	2	
		———*———		
-25	22D3046-5	. . . TUBE (Used with 22D3046-3 and -11)	1	
	22D3046-6	. . . TUBE (Used with 22D3046-4 and -12)	1	
-26	22D3172-3	. SHAFT ASSEMBLY, Transmission drive	1	
	or			
	22D3172-1	. SHAFT ASSEMBLY, Transmission drive (may be modified to 22D3172-3)	1	
	or			
	22D3057-4	. SHAFT ASSEMBLY, Transmission drive	1	
	or			
	22D3057-1	. SHAFT ASSEMBLY, Transmission drive	1	
-26A	22D3047-3	. . ADAPTER	2	
	or			
	22D3047-2	. . ADAPTER	2	
	or			
	22D3047-1	. . ADAPTER (May be modified to 22D3047-2 or -3)	2	

Figure and Index Number	Part Number	1 2 3 4 5 6 7 Description	Units per Assembly	Usable On Code
44-		*Attaching Parts*		
	AN470DD8	. . RIVET	24	
		———*———		
	PHS40701-1	. . WEIGHT, Drive shaft balancing (PHL)	AR	
	PHS40701-2	. . WEIGHT, Drive shaft balancing (PHL)	AR	
	PHS40701-3	. . WEIGHT, Drive shaft balancing (PHL)	AR	
	PHS40701-4	. . WEIGHT, Drive shaft balancing (PHL)	AR	
		Attaching Parts		
	CKL-P5G	. . RIVET (HKM)	2	
		———*———		
-27	22D3172-2	. . TUBE	1	
	or			
	22D3057-3	. . TUBE	1	
-28	22D3066-1	. SHAFT ASSEMBLY, Transmission drive (may be modified to 22D3066-4)	1	J
	22D3066-4	. SHAFT ASSEMBLY, Transmission drive	1	CW,DV
	22D3066-3	. SHAFT ASSEMBLY, Transmission drive	1	BY,DU
-29	22D3181-1	. . ADAPTER	2	BY,DU
	or			
	63D3054-1	. . ADAPTER	2	BY,DU
	22D3047-1	. . ADAPTER (May be modified to 22D3047-2 or -3)	2	J
	22D3047-3	. . ADAPTER	2	CW,DV
	or			
	22D3047-2	. . ADAPTER	2	CW,DV
		Attaching Parts		
	AN470DD8	. . RIVET	24	
		———*———		
	PHS40701-1	. . WEIGHT, Drive shaft balancing (PHL)	AR	
	PHS40701-2	. . WEIGHT, Drive shaft balancing (PHL)	AR	
	PHS40701-3	. . WEIGHT, Drive shaft balancing (PHL)	AR	
	PHS40701-4	. . WEIGHT, Drive shaft balancing (PHL)	AR	
		Attaching Parts		
	CKL-P5G	. . RIVET (HKM)	2	
		———*———		
-30	22D3066-2	. . TUBE	1	
-31	42D3043-1	SPACER	8	

Drive

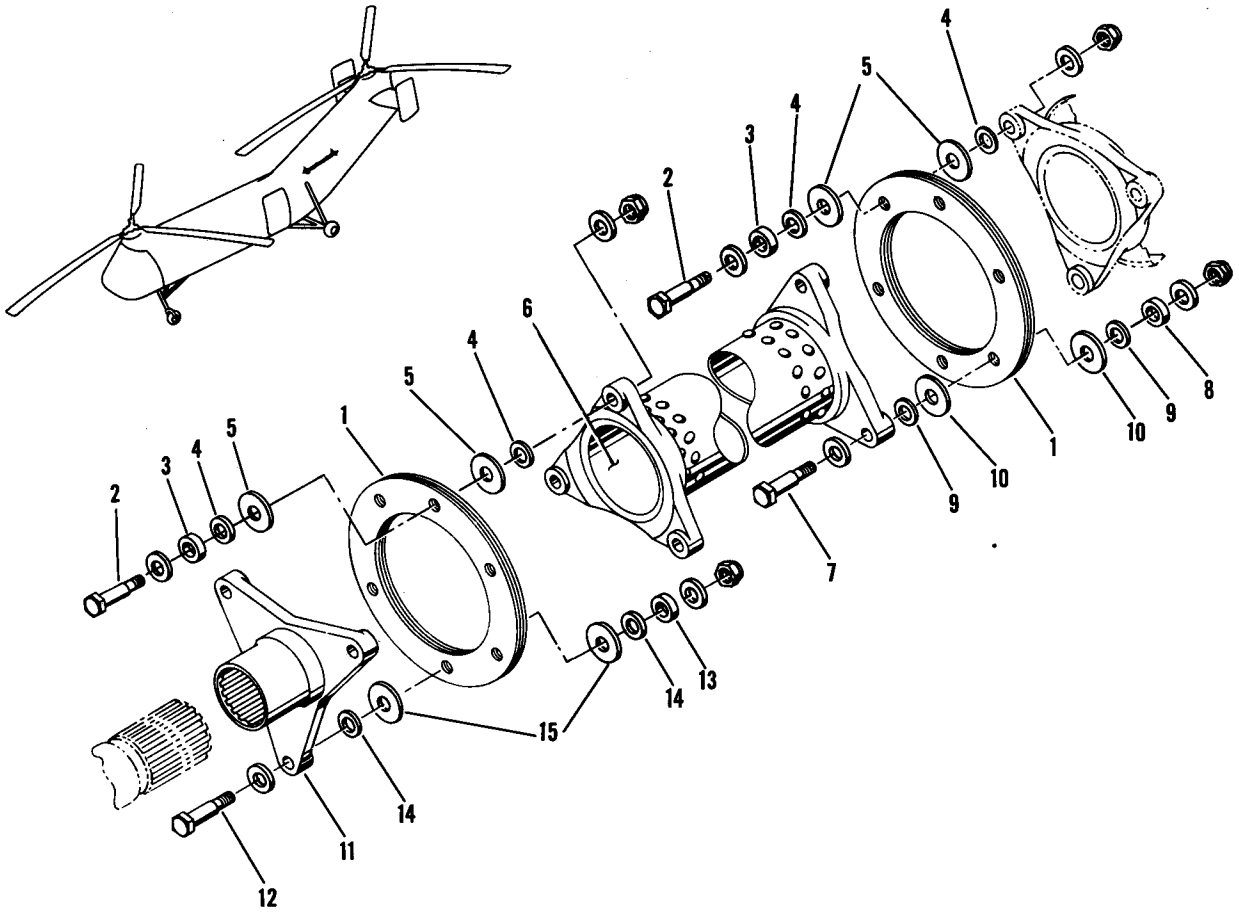

Figure 45. Engine Drive Shaft

Figure and Index Number	Part Number	Description 1 2 3 4 5 6 7	Units per Assembly	Usable On Code
45-	42D3001-2	SHAFT ASSEMBLY, Engine drive	1	
-1	15D3085-4	. PLATE ASSEMBLY, Flexible coupling (THM)	2	
		Attaching Parts		
-2	22D3171-2	. BOLT, Engine drive shaft	3	
	AN365-918	. NUT	3	
	AN960D916	. WASHER (Under nut)	3	
-3	22D3170-1	. WASHER, Shaft coupling	3	
	AN960-1016	. WASHER (Under bolt hd)	3	
	AN960-1016L	. WASHER (Max of one under bolt hd)	AR	
		——————		
	15D3085-2	. . PLATE	16	
	15D3085-3	. . PLATE	15	
-4	22D3169-2	. SPACER	12	
-5	22D3169-1	. SPACER	12	
-6	42D3056-1	. SHAFT ASSEMBLY, Engine drive	1	
		Attaching Parts		
-7	22D3171-2	. BOLT, Engine drive shaft	3	
	AN365-918	. NUT	3	
	AN960-916L	. WASHER (Under nut)	3	

Figure and Index Number	Part Number	Description 1 2 3 4 5 6 7	Units per Assembly	Usable On Code
45-8	22D3170-1	. WASHER, Shaft coupling	3	
	AN960D1016	. WASHER (Under bolt hd)	3	
	AN960D1016L	. WASHER (Max of one under bolt hd)	AR	
		———*———		
	42D3055-1	. . ADAPTER	2	
		Attaching Parts		
	AN470DD10-12	. . RIVET	24	
		———*———		
	PHS40701-1	. . . WEIGHT, Drive shaft balancing (PHL)	AR	
	PHS40701-2	. . . WEIGHT, Drive shaft balancing (PHL)	AR	
	PHS40701-3	. . . WEIGHT, Drive shaft balancing (PHL)	AR	
	PHS40701-4	. . . WEIGHT, Drive shaft balancing (PHL)	AR	
		Attaching Parts		
	CKL-P5J	. . RIVET (HKM)	2	
		———*———		
	42D3056-2	. . TUBE	1	
-9	22D3169-2	. SPACER	6	
-10	22D3169-1	. SPACER	6	
-11	22D3068-1	. ADAPTER, Splined engine drive shaft	1	
		Attaching Parts		
-12	22D3171-1	. BOLT, Engine drive shaft	3	
	AN365-918	. NUT	3	
	AN960-916L	. WASHER (Under nut)	3	
-13	22D3170-1	. WASHER, Shaft coupling	3	
	AN960-1016	. WASHER (Under bolt hd)	3	
	AN960-1016L	. WASHER (Max of one under bolt hd)	AR	
		———*———		
-14	22D3169-2	. SPACER	6	
-15	22D3169-1	. SPACER	6	

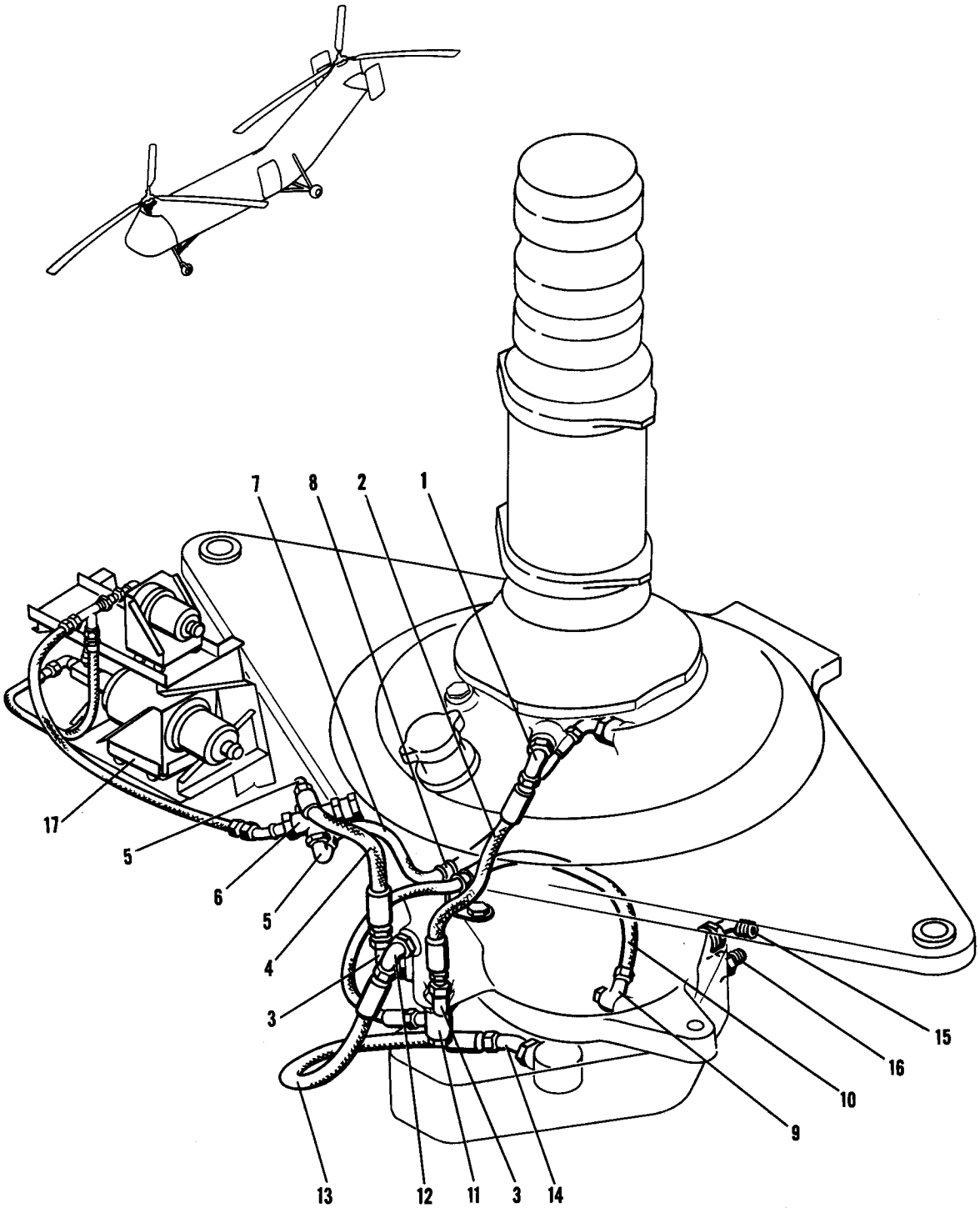

Figure 46. Forward Transmission Lubrication Piping

Figure and Index Number	Part Number	1 2 3 4 5 6 7 Description	Units per Assembly	Usable On Code
46-	22D4001-22	LUBRICATION PIPING, Fwd transmission	1	
-1	AN837-8D	. ELBOW	1	
	AN924-8D	. NUT	1	
	AN902B8	. GASKET	1	
-2	22D1174-13	. HOSE ASSEMBLY	1	
-3	AN833-8D	. ELBOW	2	
	AN924-8D	. NUT	2	
	AN902B8	. GASKET	2	
-4	22D1174-12	. HOSE ASSEMBLY	1	
-5	AN833-8D	. ELBOW	2	
-6	AN937-8D	. CROSS	1	
	AN924-8D	. NUT	3	
	AN902B8	. GASKET	3	
-7	22D1174-11	. HOSE ASSEMBLY	1	
-8	AN742D14C	. CLAMP	1	
	AN742D18C	. CLAMP	1	
-9	AN777-10D	. ELBOW	1	
	AN775-10D	. BOLT	1	
	AN901-10C	. GASKET	2	
	AN893-20D	. BUSHING	1	
	AN6227B22	. PACKING, "O" ring	1	
-10	22D1174-14	. HOSE ASSEMBLY	1	
-11	AN777-10D	. ELBOW	1	
	AN775-10D	. BOLT	1	
	AN893-20D	. BUSHING	1	
	AN901-10C	. GASKET	2	
	AN6227B22	. PACKING, "O" ring	1	
-12	AN833-8D	. ELBOW	1	
	AN924-8D	. NUT	1	
	AN902B8	. GASKET	1	
-13	22D1174-11	. HOSE ASSEMBLY	1	
-14	AN837-8D	. ELBOW	1	
	AN924-8D	. NUT	1	
	AN902B8	. GASKET	1	
-15	AN837-10D	. ELBOW	1	
	AN893-19D	. BUSHING	1	
	AN924-10D	. NUT	1	
-16	AN919-20D	. ELBOW	1	
	AN902B10	. GASKET	2	
-17	22E1175-1	TRANSMITTER AND WARNING UNIT INSTL, Fwd transmission oil pressure, see fig. 75	Ref	

Drive

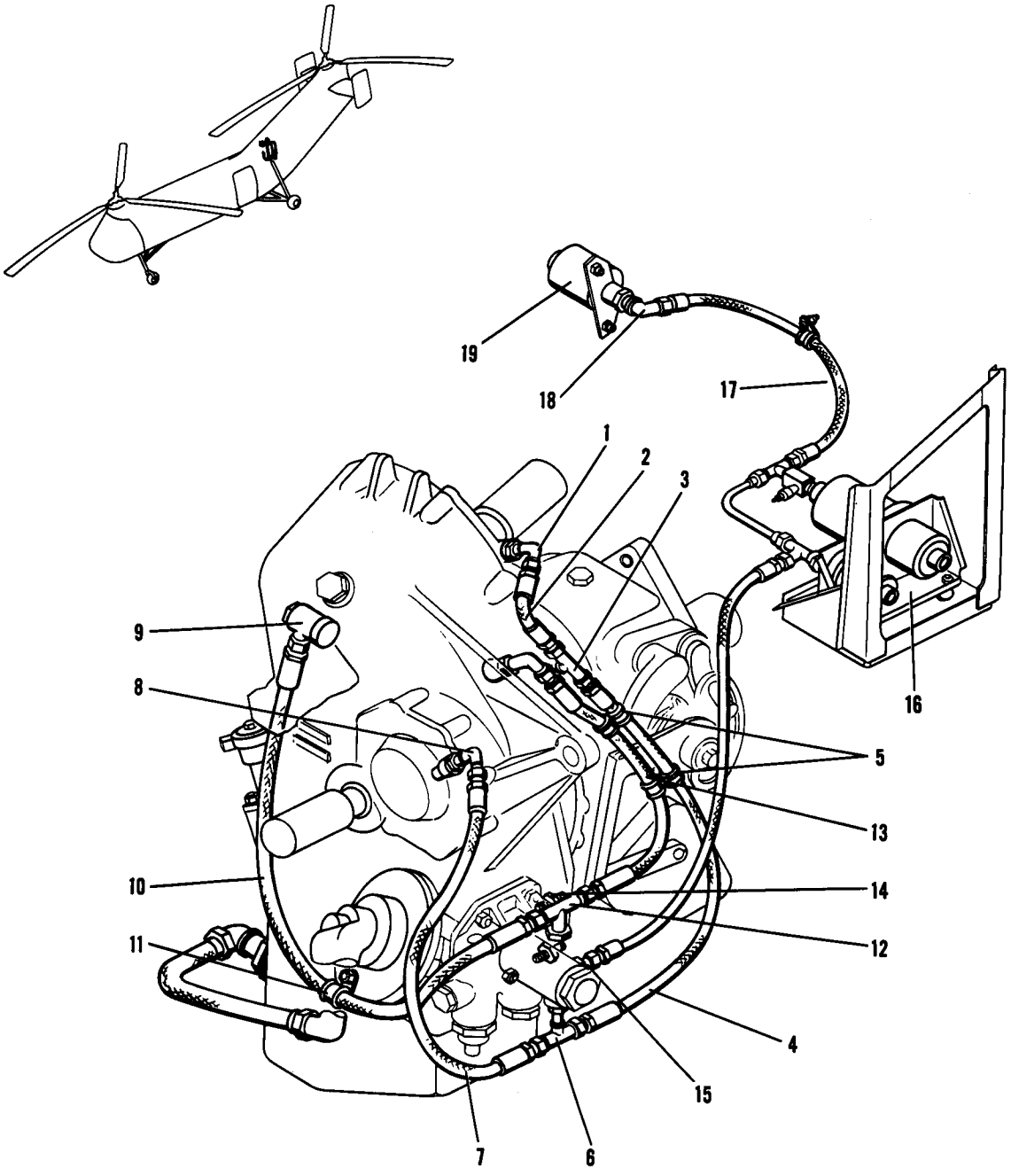

Figure 47. Central Transmission Lubrication Piping

Figure and Index Number	Part Number	Description 1 2 3 4 5 6 7	Units per Assembly	Usable On Code
47-	22D4002-19	LUBRICATION PIPING, Central transmission	1	
-1	AN833-6D	. ELBOW	1	
	AN924-6D	. NUT	1	
	AN902B6	. GASKET	1	
-2	22D1174-2	. HOSE ASSEMBLY	1	
-3	AN834-6D	. TEE	1	
	AN924-6D	. NUT	1	
	AN902B6	. GASKET	1	
-4	22D1174-4	. HOSE ASSEMBLY	1	
-5	AN742D12C	. CLAMP	2	
	AN742D14C	. CLAMP	2	
-6	AN834-6D	. TEE	1	
	AN924-6D	. NUT	1	
	AN902B6	. GASKET	1	
-7	22D1174-3	. HOSE ASSEMBLY	1	
-8	AN833-6D	. ELBOW	1	
	AN924-6D	. NUT	1	
	AN902B6	. GASKET	1	
-9	AN777-8D	. ELBOW	1	
	AN775-8D	. BOLT	1	
	AN901-8C	. GASKET	2	
-10	22D1174-6	. HOSE ASSEMBLY	1	
-11	22D1173-1	. CLAMP	1	
-12	AN834-8D	. TEE	1	
	AN924-8D	. NUT	1	
	AN902B8	. GASKET	1	
-13	22D1174-5	. HOSE ASSEMBLY	1	
-14	AN815-10D	. UNION	2	
	AN902B10	. GASKET	2	
-15	AN815-4D	. UNION	1	
	AN902B4	. GASKET	1	
-16	22E1176-1	TRANSMITTER AND WARNING UNIT INSTL, Central transmission oil pressure, see fig. 75	Ref	
	22D4002-2	SWITCH INSTALLATION, Clutch warning light cut-out	1	
-17	AN6270-4-18	. HOSE ASSEMBLY	1	J,GR
	AN6270-4-9-⅝	. HOSE ASSEMBLY	1	GS
	AN742D11C	. CLAMP	1	
-18	AN833-4D	. ELBOW	1	
	AN924-4D	. NUT	1	
	AN902B4	. GASKET	1	
-19	4101-22B-44A	. SWITCH, Pressure (STB)	1	
	or			
	575-40	. SWITCH, Pressure (COE)	1	
	or			
	555-3740	. SWITCH, Pressure (COE)	1	

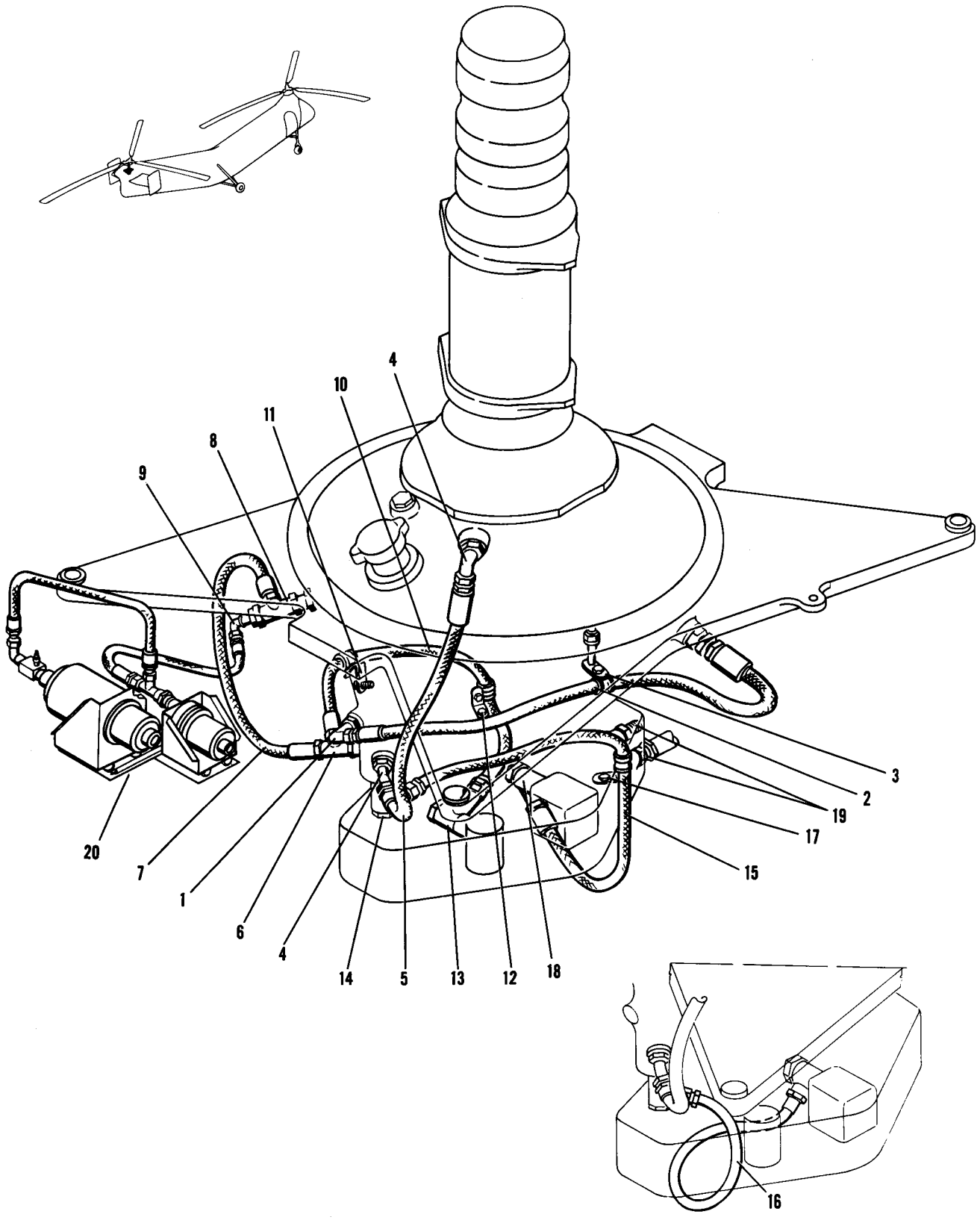

Figure 48. Aft Transmission Lubrication Piping

Figure and Index Number	Part Number	Description 1 2 3 4 5 6 7	Units per Assembly	Usable On Code
48-	22D4003-18	LUBRICATION PIPING, Aft transmission	1	J
	22D4003-19	LUBRICATION PIPING, Aft transmission	1	AU
-1	AN833-8D	. ELBOW	1	
	AN924-8D	. NUT	1	
	AN902B8	. GASKET	1	
-2	22D1174-19	. HOSE ASSEMBLY	1	
-3	22D4062-1	. ADAPTER, Clamp	1	
	AN742D14	. CLAMP	1	
-4	AN837-8D	. ELBOW	2	
	AN924-8D	. NUT	2	
	AN902B8	. GASKET	2	
-5	22D1174-16	. HOSE ASSEMBLY	1	
-6	AN804-8D	. TEE	1	
	AN924-8D	. NUT	1	
	AN902B8	. GASKET	1	
-7	22D1174-15	. HOSE ASSEMBLY	1	
-8	AN926-8D	. TEE	1	
	AN815-8D	. UNION	1	
	AN902B8	. GASKET	1	
-9	AN833-4D	. ELBOW	1	
	AN924-4D	. NUT	1	
	AN902B4	. GASKET	1	
	AN893-3D	. REDUCER	1	
-10	22D1174-17	. HOSE ASSEMBLY	1	
-11	22D4064-1	. CLIP	1	
-12	22D4064-2	. CLIP	1	
	AN742D14C	. CLAMP	2	
-13	AN778-8D	. ELBOW	1	
	AN775-8D	. BOLT	1	
	AN901-8C	. GASKET	1	
-14	AN777-10D	. ELBOW	1	J
	AN776-10D	. ELBOW	1	AU
	AN775-10D	. BOLT	1	
	AN901-10C	. GASKET	2	
	AN893-20D	. BUSHING	1	
	AN6227B22	. PACKING, "O" ring	1	
-15	22D1174-18	. HOSE ASSEMBLY	1	J
-16	22D1174-20	. HOSE ASSEMBLY	1	AU
-17	22D4064-2	. CLIP	1	J
	AN742D17C	. CLAMP	1	J
-18	AN777-10D	. ELBOW	1	J
	AN776-10D	. ELBOW	1	AU
	AN775-10D	. BOLT	1	
	AN901-10C	. GASKET	1	
-19	AN919-20D	. REDUCER	2	
	AN902B12	. GASKET	2	
-20	22E1177-1	TRANSMITTER AND WARNING UNIT INSTL, Aft transmission oil pressure, see fig. 75	Ref	

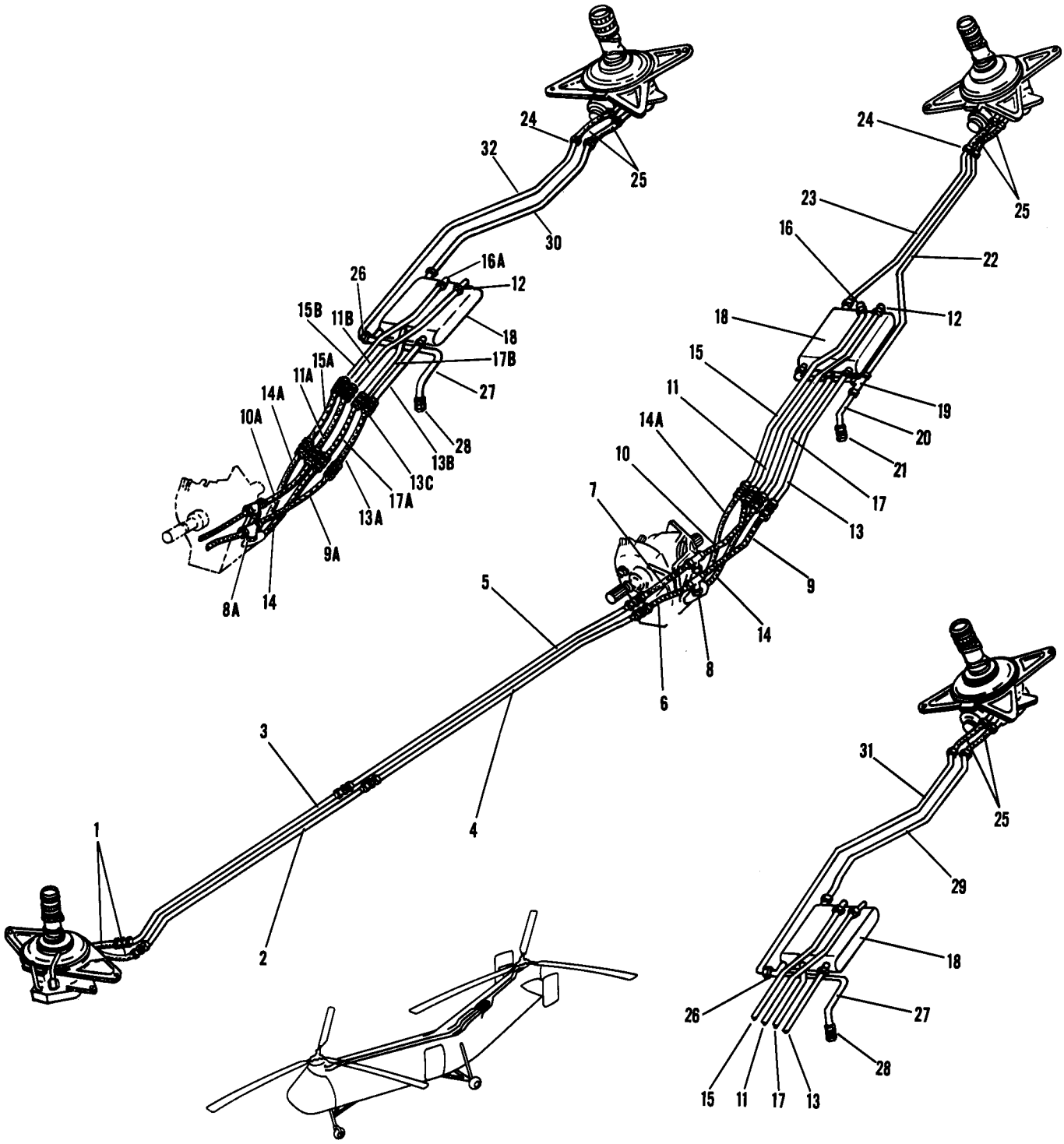

Figure 49. Transmission to Cooler Lubrication Piping

Figure and Index Number	Part Number	Description 1 2 3 4 5 6 7	Units per Assembly	Usable On Code
49-	22D4004-1	LUBRICATION PIPING, Transmission to cooler	1	CM
	22D4004-140	LUBRICATION PIPING, Transmission to cooler	1	CN
	22D4004-80	LUBRICATION PIPING, Transmission to cooler	1	CO
	22D4004-141	LUBRICATION PIPING, Transmission to cooler	1	FY
	22D4004-154	LUBRICATION PIPING, Transmission to cooler	1	FZ,HI
-1	22D1174-7	. HOSE ASSEMBLY	2	
	AN815-10D	. UNION	2	
-2	22D4004-2	. TUBE ASSEMBLY, Sta 119.500 to sta 229.500	1	
-3	22D4004-3	. TUBE ASSEMBLY, Sta 119.500 to sta 229.500	1	
	AN815-10D	. UNION	2	
-4	22D4004-4	. TUBE ASSEMBLY, Sta 229.500 to sta 359.975	1	
-5	22D4004-5	. TUBE ASSEMBLY, Sta 229.500 to sta 359.975	1	
	AN832-10D	. UNION	2	
	AN924-10D	. NUT	2	
	AN960D1416	. WASHER	2	
-6	22D1174-23	. HOSE ASSEMBLY, Sta 359.975 to sta 381.904	1	
-7	22D1174-27	. HOSE ASSEMBLY, Sta 359.975 to sta 381.904	1	
-8	AN824-10D	. TEE	2	GA
-8A	AN804-10D	. TEE	2	FZ,HI
	AN929-10	. CAP ASSEMBLY	2	GA
	AN929-10D	. CAP ASSEMBLY	2	FZ,HI
	AN924-10D	. NUT	2	FZ,HI
	AN960D1416	. WASHER	4	FZ,HI
-9	22D1174-29	. HOSE ASSEMBLY, Sta 381.904 to sta 407.833	1	GA
-9A	22D1174-24	. HOSE ASSEMBLY, Sta 381.904 to sta 407.833	1	FZ,HI
-10	22D1174-30	. HOSE ASSEMBLY, Sta 381.904 to sta 407.833	1	GA
-10A	22D1174-21	. HOSE ASSEMBLY, Sta 381.904 to sta 407.833	1	FZ,HI
	AN832-10D	. UNION	2	
	AN924-10D	. NUT	2	
	AN960D1416	. WASHER	2	
-11	22D4004-95	. TUBE ASSEMBLY, Sta 407.833 to cooler	1	GA
-11A	22D1174-24	. HOSE ASSEMBLY, Sta 407.833 to sta 429.350	1	FZ,HI
	AN815-10D	. UNION	1	FZ,HI
-11B	22D4004-156	. TUBE ASSEMBLY, Sta 429.350 to cooler	1	FZ,HI
-12	AN833-10D	. ELBOW	1	
	AN893-19D	. BUSHING, Reducer	1	J,CO
	MS29512-10	. GASKET	AR	
	MS29512-12	. GASKET	AR	J,CO
	AN924-10D	. NUT	1	
-13	22D4004-96	. TUBE ASSEMBLY, Sta 407.833 to cooler	1	GA
-13A	22D1174-28	. HOSE ASSEMBLY, Sta 407.833 to sta 429.350	1	FZ,HI
	AN815-10D	. UNION	1	FZ,HI
-13B	22D4004-158	. TUBE ASSEMBLY, Sta 429.350 to cooler	1	FZ,HI
-13C	42D4040-1	. SUPPORT ASSEMBLY, Tube	1	FZ,HI
		Attaching Parts		
	AN3-4A	. BOLT	2	FZ,HI
	AN3-26A	. BOLT	2	FZ,HI
	AN365-1032	. NUT	4	FZ,HI
	AN960D10	. WASHER	6	FZ,HI
		———*———		
	17D4060-1	. SUPPORT ASSEMBLY, Tube	3	GA
	17D4060-1	. SUPPORT ASSEMBLY, Tube	2	FZ,HI
		Attaching Parts		
	AN3-26A	. BOLT	2	
	AN365-1032	. NUT	2	
	AN960D10	. WASHER	2	
		———*———		
	AN919-20D	. REDUCER	1	
	MS29512-12	. GASKET	1	
-14	22D1174-8	. HOSE ASSEMBLY, Central transmission	1	CM,GT

Figure and Index Number	Part Number	Description 1 2 3 4 5 6 7	Units per Assembly	Usable On Code
49-	22D1174-10	. HOSE ASSEMBLY, Central transmission	1	CN,GU
-14A	22D1174-8	. HOSE ASSEMBLY, Central transmission	1	
	AN832-10D	. UNION	1	CM
	AN832-12D	. UNION	4	CN,AU
	AN924-10D	. NUT	1	CM
	AN924-12D	. NUT	4	CN,AU
	AN894-12-10D	. BUSHING	4	CN,AU
	MS29512-12	. GASKET	4	CN,AU
	AN960D1416	. WASHER	4	CM
	AN960D1716	. WASHER	4	CN,AU
-15	22D4004-97	. TUBE ASSEMBLY, Sta 407.833 to cooler	1	CN,FY
	22D4004-136	. TUBE ASSEMBLY, Sta 407.833 to sta 478.000	1	CM,CO
	AN919-20D	. REDUCER	1	CM,CO
	22D4004-138	. TUBE ASSEMBLY, Sta 478.000 to cooler	1	CM,CO
-15A	22D1174-21	. HOSE ASSEMBLY, Sta 407.833 to sta 429.350	1	FZ,HI
	AN815-10D	. UNION	1	FZ,HI
-15B	22D4004-160	. TUBE ASSEMBLY, Sta 429.350 to cooler	1	FZ,HI
	22D4004-138	. TUBE ASSEMBLY, Sta 478.000 to cooler	1	CM,CO
-16	AN833-12D	. ELBOW	1	CM,CO
-16A	AN833-10D	. ELBOW	1	GB
	MS29512-10	. GASKET	1	GB
	MS29512-12	. GASKET	1	CM,CO
	AN924-12D	. NUT	1	CM,CO
	AN924-10D	. NUT	1	GB
-17	22D4004-98	. TUBE ASSEMBLY, Sta 407.833 to cooler	1	CM,GT
	22D4004-144	. TUBE ASSEMBLY, Sta 407.833 to cooler	1	CN,GV
-17A	22D1174-23	. HOSE ASSEMBLY, Sta 407.833 to sta 429.350	1	FZ,HI
	AN815-10D	. UNION	1	FZ,HI
-17B	22D4004-162	. TUBE ASSEMBLY, Sta 429.350 to cooler	1	FZ,HI
	AN837-10D	. ELBOW	1	
	AN893-19D	. BUSHING, Reducer	1	
	MS29512-10	. GASKET	1	
	MS29512-12	. GASKET	AR	
	AN924-10D	. NUT	1	
-18	8520326	. COOLER, Transmission oil (HR)	1	CM,CO
	8521992	. COOLER, Transmission oil (HR)	1	GB
		Attaching Parts		
	AN3-4A	. BOLT	10	
	AN365-1032	. NUT	10	
	AN960D10	. WASHER	20	
		———*———		
	22D4004-29	. TUBE ASSEMBLY, Cooler to drain line	1	J
	AN833-10D	. ELBOW	1	J
	AN893-19D	. BUSHING, Reducer	1	J
	MS29512-10	. GASKET	1	J
	MS29512-12	. GASKET	1	J
	AN924-10D	. NUT	1	J
-19	AN824-10D	. TEE	1	J
-20	22D4004-107	. TUBE ASSEMBLY, Drain line	1	J
-21	AN806D10	. PLUG	1	J
-22	22D4004-99	. TUBE ASSEMBLY, Cooler to sta 597	1	J
	AN837-10D	. ELBOW	1	
	AN960D1416	. WASHER	2	
	AN924-10D	. NUT	1	
-23	22D4004-100	. TUBE ASSEMBLY, Cooler to sta 597	1	J
-24	AN837-10D	. ELBOW	1	
	AN960D1416	. WASHER	2	
	AN924-10D	. NUT	1	
-25	22D1174-9	. HOSE ASSEMBLY	2	
	AN742D12C	. CLAMP	40	
-26	AN834-10D	. TEE	1	AU

Figure and Index Number	Part Number	1 2 3 4 5 6 7 Description	Units per Assembly	Usable On Code
49-	AN893-19D	. BUSHING, Reducer	1	AU
	MS29512-10	. GASKET	1	AU
	MS29512-12	. GASKET	1	AU
	AN924-10D	. NUT	1	AU
-27	22D4004-83	. TUBE ASSEMBLY, Drain line	1	AU
-28	AN806D10	. PLUG	1	AU
	AN819-10D	. SLEEVE	2	AU
	AN818-10D	. NUT	2	AU
-29	22D4004-81	. TUBE ASSEMBLY, Cooler to sta 574.250	1	CO,FY
-30	22D4004-146	. TUBE ASSEMBLY, Cooler to sta 574.250	1	FZ,HI
	AN919-20D	. REDUCER	1	GE
	MS29512-12	. GASKET	1	GE
-31	22D4004-82	. TUBE ASSEMBLY, Cooler to sta 574.250	1	CO,FY
-32	22D4004-147	. TUBE ASSEMBLY, Cooler to sta 574.250	1	IA,IQ
	22D4004-181	. TUBE ASSEMBLY, Cooler to sta 574.250	1	IR

Controls

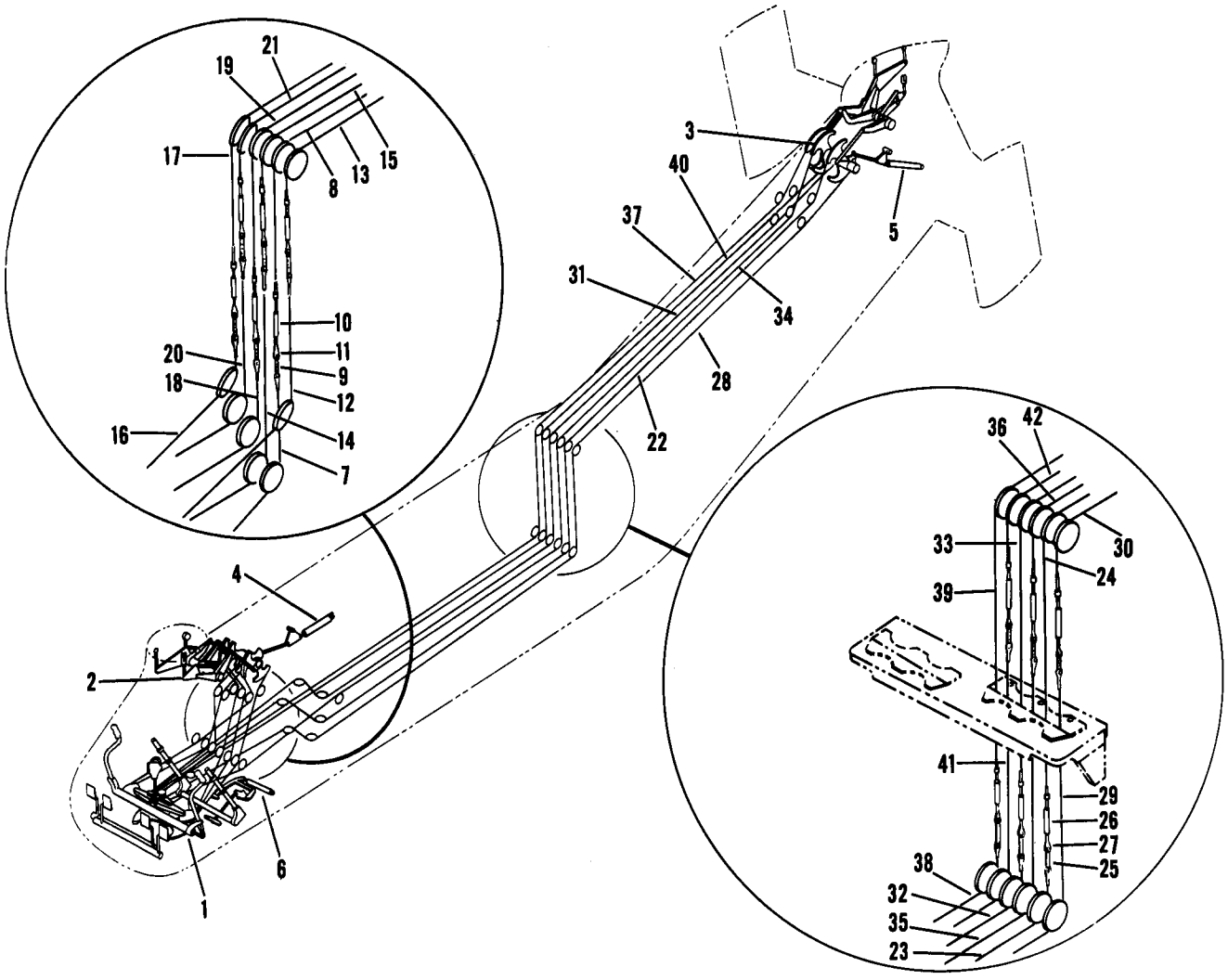

Figure 50. Flight Controls

Figure and Index Number	Part Number	1 2 3 4 5 6 7 Description	Units per Assembly	Usable On Code
50-	22C0001-1	CONTROL SYSTEM	1	J
	42C0001-1	CONTROL SYSTEM	1	AU
	22C2001-1	. CONTROLS, Engine, see fig. 71	Ref	
	42C2001-1	. CONTROLS, Engine, see fig. 71	Ref	
	22C1001-1	. CONTROLS, Flight	1	J
	42C1001-1	. CONTROLS, Flight	1	AU
-1	22C1002-1	. . CONTROLS, Cockpit flight, see fig. 51	Ref	
	42C1002-1	. . CONTROLS, Cockpit flight, see fig. 51	Ref	
-2	22C1003-1	. . CONTROLS, Fwd upper flight, see fig. 64	Ref	
	42C1003-1	. . CONTROLS, Fwd upper flight, see fig. 64	Ref	
-3	22C1004-1	. . CONTROLS, Aft upper flight, see fig. 66	Ref	
	42C1004-1	. . CONTROLS, Aft upper flight, see fig. 66	Ref	
-4	22C1900-1	. . BUNGEE INSTALLATION, Fwd collective pitch, see fig. 67	Ref	
-5	22C1920-1	. . BUNGEE INSTALLATION, Aft collective pitch, see fig. 68	Ref	
-6	22C1925	. . BUNGEE INSTALLATION, Longitudinal, see fig. 69*	Ref	
	22C1006-1	. . CABLE ASSEMBLY, Lateral fwd right	1	
-7	22C1006-13	. . . CABLE SUBASSEMBLY	1	
-8	22C1006-14	. . . CABLE SUBASSEMBLY	1	
	22C1801-1	. . . . TERMINAL	1	
-9	22C1800-1	. . . LINK, Flight control adjustment	1	
		Attaching Parts		
	AN24-13	. . . BOLT	2	
	AN381-2-12	. . . PIN, Cotter	2	
	AN320-4	. . . NUT	2	
	AN960-416	. . . WASHER	2	
		———*———		
-10	AN155-32L	. . . BARREL, Turnbuckle	1	
-11	AN161-32RL	. . . TERMINAL	1	
	22C1006-2	. . CABLE ASSEMBLY, Lateral fwd left	1	
-12	22C1006-15	. . . CABLE SUBASSEMBLY	1	
-13	22C1006-16	. . . CABLE SUBASSEMBLY	1	
	22C1801-1	. . . . TERMINAL	1	
	22C1800-1	. . . LINK, Flight control adjustment	1	
	AN155-32L	. . . BARREL, Turnbuckle	1	
	AN161-32RL	. . . TERMINAL	1	
	22C1006-3	. . CABLE ASSEMBLY, Collective pitch fwd right	1	
-14	22C1006-17	. . . CABLE SUBASSEMBLY	1	
-15	22C1006-18	. . . CABLE SUBASSEMBLY	1	
	22C1801-1	. . . . TERMINAL	1	
	22C1800-1	. . . LINK	1	
	AN155-32L	. . . BARREL, Turnbuckle	1	
	AN161-32RL	. . . TERMINAL	1	
	22C1006-4	. . CABLE ASSEMBLY, Collective pitch fwd left	1	
-16	22C1006-19	. . . CABLE SUBASSEMBLY	1	
-17	22C1006-20	. . . CABLE SUBASSEMBLY	1	
	22C1801-1	. . . . TERMINAL	1	
	22C1800-1	. . . LINK, Flight control adjustment	1	
	AN155-32L	. . . BARREL, Turnbuckle	1	
	AN161-32RL	. . . TERMINAL	1	
	22C1006-5	. . CABLE ASSEMBLY, Longitudinal fwd right	1	
-18	22C1006-21	. . . CABLE SUBASSEMBLY	1	
-19	22C1006-22	. . . CABLE SUBASSEMBLY	1	
	22C1801-1	. . . . TERMINAL	1	
	22C1800-1	. . . LINK, Flight control adjustment	1	
	AN155-32L	. . . BARREL, Turnbuckle	1	
	AN161-32RL	. . . TERMINAL	1	
	22C1006-6	. . CABLE ASSEMBLY, Longitudinal fwd left	1	
-20	22C1006-23	. . . CABLE SUBASSEMBLY	1	
-21	22C1006-24	. . . CABLE SUBASSEMBLY	1	
	22C1801-1	. . . . TERMINAL	1	
	22C1800-1	. . . LINK, Flight control adjustment	1	

*For proper usable on codes and complete breakdown, see figure number as indicated.

Figure and Index Number	Part Number	1 2 3 4 5 6 7 Description	Units per Assembly	Usable On Code
50-	AN155-32L	. . . BARREL, Turnbuckle	1	
	AN161-32RL	. . . TERMINAL	1	
-22	22C1006-7	. . CABLE ASSEMBLY, Lateral aft right	1	J
	22C1006-61	. . CABLE ASSEMBLY, Lateral aft right	1	AU
-23	22C1006-25	. . . CABLE SUBASSEMBLY	1	
-24	22C1006-26	. . . CABLE SUBASSEMBLY	1	
	22C1801-1	. . . . TERMINAL	1	
-25	22C1800-1	. . . LINK, Flight control adjustment	1	
		Attaching Parts		
	AN24-13	. . . BOLT	2	
	AN381-2-12	. . . PIN, Cotter	2	
	AN320-4	. . . NUT	2	
	AN960-416	. . . WASHER	2	
		———*———		
-26	AN155-32L	. . . BARREL, Turnbuckle	1	J
	D6-1001-5L-3A	. . . QUICK DISCONNECT (PAS)	1	AU
-27	22C1802-1	. . . CLEVIS	1	
-28	22C1006-8	. . CABLE ASSEMBLY, Lateral aft left	1	J
	22C1006-62	. . CABLE ASSEMBLY, Lateral aft left	1	AU
-29	22C1006-27	. . . CABLE SUBASSEMBLY	1	
-30	22C1006-28	. . . CABLE SUBASSEMBLY	1	
	22C1801-1	. . . . TERMINAL	1	
	22C1800-1	. . . LINK, Flight control adjustment	1	
	AN155-32L	. . . BARREL, Turnbuckle	1	J
	D6-1001-5L-3A	. . . QUICK DISCONNECT (PAS)	1	AU
	22C1802-1	. . . CLEVIS	1	
-31	22C1006-9	. . CABLE ASSEMBLY, Collective pitch aft right	1	J
	22C1006-63	. . CABLE ASSEMBLY, Collective pitch aft right	1	AU
-32	22C1006-29	. . . CABLE SUBASSEMBLY	1	
-33	22C1006-30	. . . CABLE SUBASSEMBLY	1	
	22C1801-1	. . . . TERMINAL	1	
	22C1800-1	. . . LINK, Flight control adjustment	1	
	AN155-32L	. . . BARREL, Turnbuckle	1	J
	D6-1001-5L-3A	. . . QUICK DISCONNECT (PAS)	1	AU
	22C1802-1	. . . CLEVIS	1	
-34	22C1006-10	. . CABLE ASSEMBLY, Collective pitch aft left	1	J
	22C1006-64	. . CABLE ASSEMBLY, Collective pitch aft left	1	AU
-35	22C1006-31	. . . CABLE SUBASSEMBLY	1	
-36	22C1006-32	. . . CABLE SUBASSEMBLY	1	
	22C1801-1	. . . . TERMINAL	1	
	22C1800-1	. . . LINK, Flight control adjustment	1	
	AN155-32L	. . . BARREL, Turnbuckle	1	J
	D6-1001-5L-3A	. . . QUICK DISCONNECT (PAS)	1	AU
	22C1802-1	. . . CLEVIS	1	
-37	22C1006-11	. . CABLE ASSEMBLY, Longitudinal aft right	1	J
	22C1006-65	. . CABLE ASSEMBLY, Longitudinal aft right	1	AU
-38	22C1006-33	. . . CABLE SUBASSEMBLY	1	
-39	22C1006-34	. . . CABLE SUBASSEMBLY	1	
	22C1801-1	. . . . TERMINAL	1	
	22C1800-1	. . . LINK, Flight control adjustment	1	
	AN155-32L	. . . BARREL, Turnbuckle	1	J
	D6-1001-5L-3A	. . . QUICK DISCONNECT (PAS)	1	AU
	22C1802-1	. . . CLEVIS	1	
-40	22C1006-12	. . CABLE ASSEMBLY, Longitudinal aft left	1	J
	22C1006-66	. . CABLE ASSEMBLY, Longitudinal aft left	1	AU
-41	22C1006-35	. . . CABLE SUBASSEMBLY	1	
-42	22C1006-36	. . . CABLE SUBASSEMBLY	1	
	22C1801-1	. . . . TERMINAL	1	
	22C1800-1	. . . LINK, Flight control adjustment	1	
	AN155-32L	. . . BARREL, Turnbuckle	1	J
	D6-1001-5L-3A	. . . QUICK DISCONNECT (PAS)	1	AU
	22C1802-1	. . . CLEVIS	1	

Controls

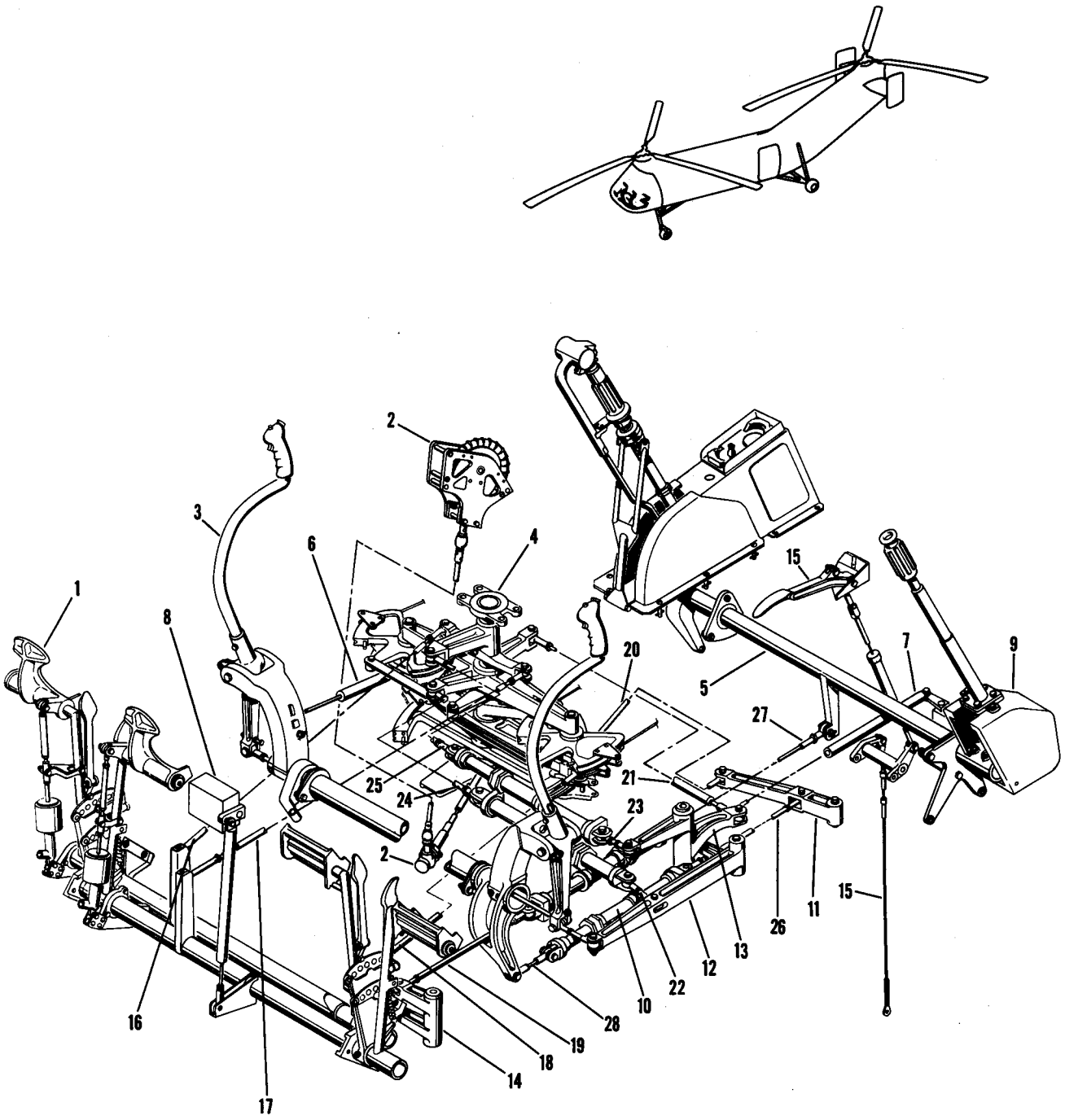

Figure 51. Cockpit Controls

Figure and Index Number	Part Number	Description 1 2 3 4 5 6 7	Units per Assembly	Usable On Code
51-	22C1002-1	CONTROLS, Cockpit flight	1	J
	42C1002-1	CONTROLS, Cockpit flight	1	AU
-1	22C1011-2	. CONTROLS INSTALLATION, Pedal, see fig. 52	Ref	
-2	22C1012	. TRIM INSTALLATION, See fig. 53*	Ref	
-3	22C1013	. STICK INSTALLATION, Cyclic control, see fig. 54*	Ref	
-4	22C1014-1	. CONTROL INSTALLATION, Lower differential, see fig. 55	Ref	
	42C1014-1	. CONTROL INSTALLATION, Lower differential, see fig. 56	Ref	
-5	22C1015	. LEVER INSTALLATION, Collective pitch, see fig. 57*	Ref	
	42C1015	. LEVER INSTALLATION, Collective pitch, see fig. 57*	Ref	
-6	22C1018	. SPRING INSTALLATION, Longitudinal centering, see fig. 60*	Ref	
-7	22C1019	. SPRING INSTALLATION, Lateral centering, see fig. 60*	Ref	
-8	22C1020	. SPRING INSTALLATION, Directional centering, see fig. 60*	Ref	
-9	22C1023-1	. SHIELD ASSEMBLY, Co-pilot's collective pitch lever	1	
	or			
	22C1023-6	. SHIELD ASSEMBLY, Co-pilot's collective pitch lever	1	
-10	22C1024-1	. ACTUATOR INSTALLATION, Longitudinal hydraulic, see fig. 61	Ref	
	22C1024-2	. ACTUATOR INSTALLATION, Lateral hydraulic, see fig. 61	Ref	
	22C1024-3	. ACTUATOR INSTALLATION, Directional hydraulic, see fig. 61	Ref	
	22C1024-4	. ACTUATOR INSTALLATION, Collective pitch hydraulic, see fig. 61	Ref	
-11	22C1025-1	. BELLCRANK INSTALLATION, Lower longitudinal, see fig. 62	Ref	
	42C1025-1	. BELLCRANK INSTALLATION, Lower longitudinal, see fig. 62	Ref	
-12	22C1026-1	. BELLCRANK INSTALLATION, Lower lateral, see fig. 62	Ref	
-13	22C1026-2	. BELLCRANK INSTALLATION, Lower directional, see fig. 62	Ref	
-14	22C1027	. BELLCRANK INSTALLATION, Lower collective pitch, see fig. 62*	Ref	
-15	22C1005-3	. LOCK INSTALLATION, Aux alighting wheel, see fig. 63	Ref	
	42C4001-1	. LOCK INSTALLATION, Aux alighting wheel, see fig. 63	Ref	
-16	22C1769-1	. ROD ASSEMBLY, Flight controls	1	
-17	22C1769-2	. ROD ASSEMBLY, Flight controls	1	
-18	22C1769-9	. ROD ASSEMBLY, Flight controls	1	
	RE4M6	. . BEARING, Rod end (FAF)	2	
-19	22C1773-9	. ROD ASSEMBLY, Flight controls	1	
	or			
	22C1773-1	. ROD ASSEMBLY, Flight controls	1	
	MR-4	. . BEARING, Rod end (SHA)	2	
-20	22C1769-4	. ROD ASSEMBLY, Flight controls	1	
	RE4M6	. . BEARING, Rod end (FAF)	2	
	NAS43-4-7	. SPACER (Used at fwd end of 22C1769-4)	2	
-21	22C1696-4	. ROD ASSEMBLY, Flight controls	1	
	RE4M6	. . BEARING, Rod end (FAF)	2	
-22	22C1030-1	. LINK ASSEMBLY, Lower flight controls	1	
-23	22C1030-2	. LINK ASSEMBLY, Lower flight controls	1	
	MR-4	. . BEARING, Rod end (SHA)	1	
	FR-4	. . BEARING, Rod end (SHA)	1	
-24	22C1028-1	. LINK ASSEMBLY, Flight controls	1	
-25	22C1028-13	. LINK ASSEMBLY, Flight controls	1	
-26	22C1028-3	. LINK ASSEMBLY, Flight controls	1	
-27	22C1028-4	. LINK ASSEMBLY, Flight controls	1	AE
	22C1028-16	. LINK ASSEMBLY, Flight controls	1	F,B
-28	22C1028-2	. LINK ASSEMBLY, Flight controls	1	
	FR4-5	. . BEARING, Rod end (SHA)	1	

*For proper usable on codes and complete breakdown, see figure number as indicated.

Controls

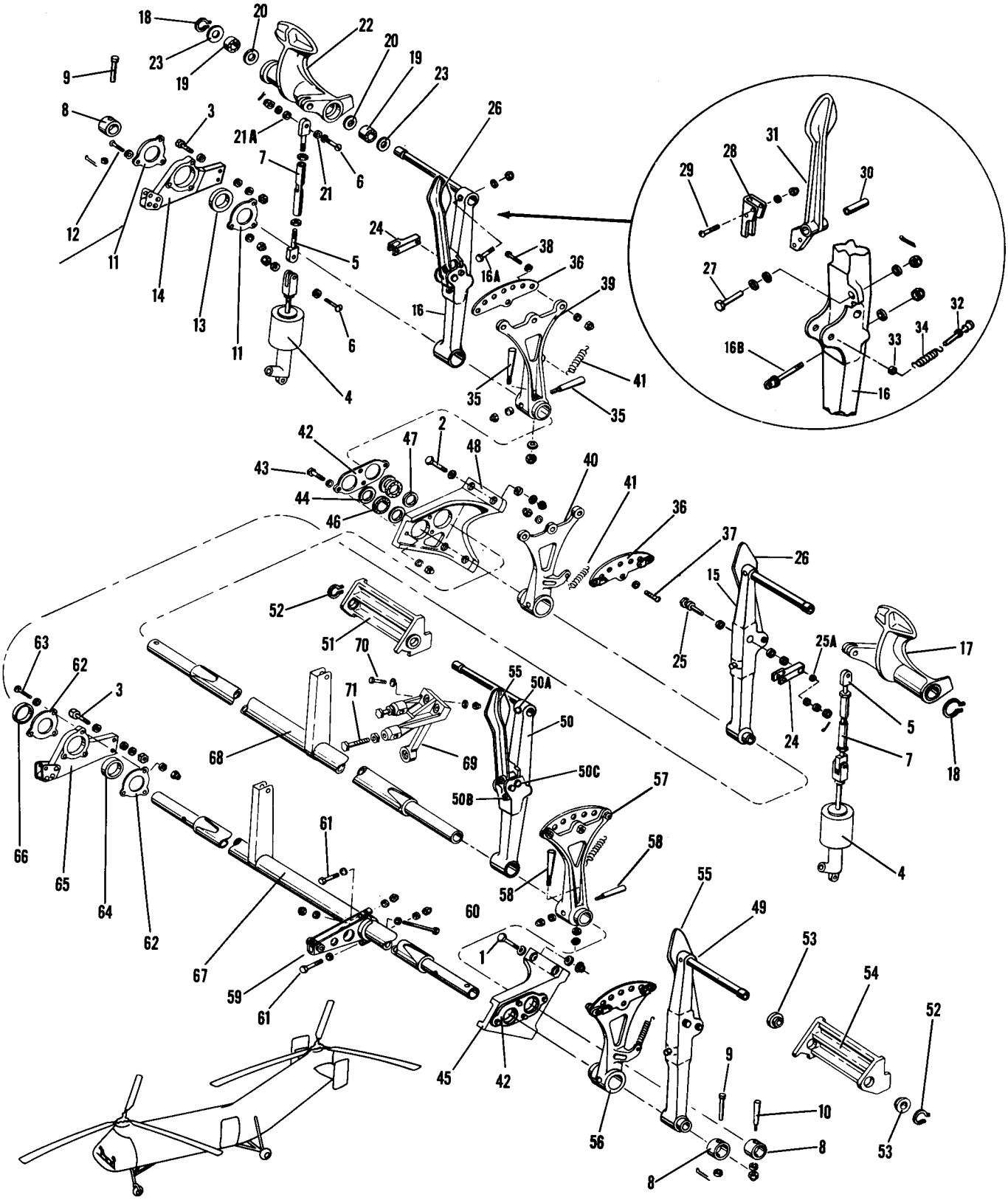

Figure 52. Pedal Controls

Figure and Index Number	Part Number	Description 1 2 3 4 5 6 7	Units per Assembly	Usable On Code
52-	22C1011-2	CONTROLS INSTALLATION, Pedal	1	
	22C1011-4	. CONTROLS ASSEMBLY, Pedal	1	
	or			
	22C1011-1	. CONTROLS ASSEMBLY, Pedal	1	
		Attaching Parts		
-1	AN4-7A	. BOLT	1	
-2	AN4-10A	. BOLT	7	
-3	AN526-1032-12	. SCREW	2	
	AN365-428	. NUT	8	
	AN365-1032	. NUT	2	
	AN960D416	. WASHER	10	
	AN960D416L	. WASHER	7	
	AN960D10L	. WASHER	4	
	AN960D10	. WASHER	2	
		———*———		
-4	24963	. . CONTROL UNIT, Master (AP), see figure 94	Ref	
-5	3C1712	. . ROD END, Toe brake	4	
		Attaching Parts		
-6	AN23-17	. . BOLT	1	
	AN381-2-8	. . PIN, Cotter	1	
	AN320-3	. . NUT	1	
	AN960-10L	. . WASHER	2	
		———*———		
-7	17C1133-1	. . ROD, Brake	2	
	AN316-4R	. . NUT	4	
-8	17C1121-1	. . RETAINER	3	
		Attaching Parts		
-9	AN393-47	. . PIN, Flat hd	2	
-10	AN386-2-12	. . PIN, Taper	1	
	AN381-2-8	. . PIN, Cotter	3	
	AN320-3	. . NUT	1	
	AN960-10L	. . WASHER	2	
	AN975-3	. . WASHER	1	
		———*———		
	22C1115-1	. . SUPPORT ASSEMBLY, Right brake	1	J,KM
	22C1115-12	. . SUPPORT ASSEMBLY, Right brake	1	JA,EW
-11	17C1138-1	. . . RETAINER (Used with 22C1115-1 and -11)	2	
		Attaching Parts		
-12	AN526-632-10	. . . SCREW (Used as shown with 22C1115-1)	3	
	AN526-632-10	. . . SCREW (Reverse direction when used with 22C1115-11)	3	
	AN365-632	. . . NUT (Used with 22C1115-1 and -11)	3	
	AN960D6L	. . . WASHER (Used with 22C1115-1 and -11)	6	
		———*———		
-13	42C1141-1	. . . BEARING	1	
-14	22C1115-2	. . . PLATE ASSEMBLY	1	
-15	42C1143-13	. . POST ASSEMBLY, Pilot's pedal LH (used with 22C1011-4)	1	
	22C1111-3	. . POST ASSEMBLY, Pilot's pedal LH (used with 22C1011-1)	1	
-16	42C1143-14	. . POST ASSEMBLY, Pilot's pedal RH (used with 22C1011-4)	1	
	42C1111-4	. . POST ASSEMBLY, Pilot's pedal RH (used with 22C1011-1)	1	
	22C1111-21	. . . SUPPORT	1	
		Attaching Parts		
-16A	AN23-30A	. . . BOLT (Used with 42C1143-13 and -14)	1	
	AN364-1032	. . . NUT (Used with 42C1143-13 and -14)	1	
	AN960D10L	. . . WASHER (Used with 42C1143-13 and -14)	2	
		———*———		
-16B	AN42B14A	. . . BOLT, Eye (used with 42C1143-13 and -14)	1	
		Attaching Parts		
	AN364-1032	. . . NUT	1	

Figure and Index Number	Part Number	1 2 3 4 5 6 7 Description	Units per Assembly	Usable On Code
52-	AN960D10	. . . WASHER	1	
		———*———		
-17	17C1118-1	. . PEDAL ASSEMBLY, Pilot's foot LH	1	
	17C1118-2	. . PEDAL ASSEMBLY, Pilot's foot RH	1	
		Attaching Parts		
-18	NAS51-87	. . RING, External retainer	1	
		———*———		
-19	B540	. . . BEARING (FAF)	2	
-20	14C1106-5	. . . GUARD, Bearing dirt	2	
-21	NAS77-3-17	. . . BUSHING	1	
-21A	NAS75-3-9	. . . BUSHING	1	
	17C1118-3	. . . PEDAL, LH	1	
-22	17C1118-4	. . . PEDAL, RH	1	
-23	14C1106-3	. . GUARD, Bearing dirt	2	
-24	22C1033-3	. . IDLER, Brake controls (used with 22C1011-4)	2	
	22C1033-1	. . IDLER, Brake controls (used with 22C1011-1)	2	
		Attaching Parts		
-25	42C1144-13	. . GUIDE (Used with 22C1011-4)	1	
	22C1032-1	. . PIN (Used with 22C1011-1)	1	
	AN380-2-3	. . PIN, Cotter (used with 22C1011-4)	1	
	AN381-2-11	. . PIN, Cotter (used with 22C1011-1)	1	
	AN320-5	. . NUT (Used with 22C1011-4)	1	
	AN310-4	. . NUT (Used with 22C1011-1)	1	
	AN960D516	. . WASHER (Used with 22C1011-4)	3	
	AN960-416	. . WASHER (Used with 22C1011-1)	1	
	AN960-516L	. . WASHER (Used with 22C1011-4)	1	
	AN960-516	. . WASHER (Used with 22C1011-1)	1	
		———*———		
-25A	NAS77-5-51	. . . BUSHING	1	
-26	17C1116-1	. . LEVER ASSEMBLY, Pedal adjustment (used with 22C1011-1)	2	
	17C1116-10	. . LEVER ASSEMBLY, Pedal adjustment LH (used with 22C1011-4)	1	
	17C1116-11	. . LEVER ASSEMBLY, Pedal adjustment RH (used with 22C1011-4)	1	
		Attaching Parts		
-27	AN24-21	. . BOLT (Used with 17C1116-1)	1	
	AN174-17	. . BOLT (Used with 17C1116-10 and 17C1116-11)	1	
	AN381-2-12	. . PIN, Cotter (used with 17C1116-1)	1	
	AN380-2-3	. . PIN, Cotter (used with 17C1116-10 and 17C1116-11)	1	
	AN320-3	. . NUT (Used with 17C1116-1)	1	
	AN310-4	. . NUT (Used with 17C1116-10 and 17C1116-11)	1	
	AN960-416	. . WASHER (Used with 17C1116-1)	1	
	AN960D416	. . WASHER (Used with 17C1116-10 and 17C1116-11)	3	
		———*———		
-28	17C1125-1	. . . CHANNEL	1	
		Attaching Parts		
-29	AN21-12A	. . . BOLT	2	
	AN364-640	. . . NUT	2	
	AN960-6	. . . WASHER	2	
		———*———		
-30	NAS75-4-028	. . . BUSHING	1	
-31	17C1116-2	. . . LEVER (Used with 17C1116-1)	1	
	17C1116-20	. . . LEVER (Used with 17C1116-10 and 17C1116-11)	1	
-32	PHS204-1	. . PIN, Pedal adjustment (PHL) (used with 22C1011-1)	4	
	42C1149-1	. . PIN, Pedal adjustment (used with 22C1011-4)	4	
		Attaching Parts		
	AN365-1032	. . NUT (Used with PHS204-1)	1	
	AN960-416	. . WASHER (Used with PHS204-1)	2	
		———*———		
-33	NAS75-6-004	. . BUSHING (Used with 22C1011-4)	4	
	22C1128-1	. . SLEEVE (Used with 22C1011-1)	4	
-34	17C1134-1	. . SPRING, Pedal adjustment release	4	
	22C1114-3	. . PLATE ASSEMBLY, Pilot's pedal adjustment	1	

Figure and Index Number	Part Number	Description 1-2 3 4 5 6 7	Units per Assembly	Usable On Code
52-	22C1114-4	. . PLATE ASSEMBLY, Pilot's pedal adjustment	1	
		Attaching Parts		
-35	AN386-2-14	. . PIN, Taper	2	
	AN381-2-8	. . PIN, Cotter	2	
	AN320-3	. . NUT	2	
	AN975-3	. . WASHER	2	
		———*———		
-36	22C1117-1	. . . PLATE	1	
		Attaching Parts		
-37	AN23-12A	. . . BOLT	1	
-38	AN23-13A	. . . BOLT	2	
	AN365-1032	. . . NUT	3	
	AN960D10	. . . WASHER	3	
		———*———		
	22C1034-7	. . . STOP, Pedal adjustment	1	
	or			
	22C1034-3	. . . STOP, Pedal adjustment	1	
	22C1118-1	. . . STOP, Pedal adjustment	1	
	22C1034-8	. . . STOP, Pedal adjustment	1	
	or			
	22C1034-4	. . . STOP, Pedal adjustment	1	
-39	22C1116-3	. . . ARM, Pedal adjustment	1	
-40	22C1116-1	. . . ARM, Pedal adjustment	1	
-41	17C1128-1	. . SPRING, Pedal adjustment extension	4	
-42	17C1131-1	. . RETAINER, Bearing	2	
		Attaching Parts		
-43	AN23-12A	. . BOLT	4	
	AN365-1032	. . NUT	4	
	AN960D10	. . WASHER	4	
	AN960D10L	. . WASHER	4	
		———*———		
-44	14C1106-1	. . GUARD, Bearing dirt	4	
	17C1130-6	. . SUPPORT ASSEMBLY, Pedals	1	
-45	17C1130-5	. . SUPPORT ASSEMBLY, Pedals	1	
-46	B542	. . . BEARING (FAF)	2	
-47	14C1106-1	. . . GUARD, Bearing dirt	2	
-48	17C1130-8	. . . SUPPORT	1	
	17C1130-7	. . . SUPPORT	1	
-49	42C1143-11	. . POST ASSEMBLY, Co-pilot's pedal LH (used with 22C1011-4)	1	
	22C1111-1	. . POST ASSEMBLY, Co-pilot's pedal LH (used with 22C1011-1)	1	
-50	42C1143-12	. . POST ASSEMBLY, Co-pilot's pedal RH (used with 22C1011-4)	1	
	22C1111-2	. . POST ASSEMBLY, Co-pilot's pedal RH (used with 22C1011-1)	1	
	22C1111-21	. . . SUPPORT	1	
		Attaching Parts		
-50A	AN23-30A	. . . BOLT (Used with 42C1143-11 and -12)	1	
	AN364-1032	. . . NUT (Used with 42C1143-11 and -12)	1	
	AN960D10L	. . . WASHER (Used with 42C1143-11 and -12)	2	
		———*———		
-50B	AN42B-14A	. . . BOLT, Eye (used with 42C1143-11 and -12)	1	
		Attaching Parts		
	AN364-1032	. . . NUT	1	
	AN960D10	. . . WASHER	1	
		———*———		
-50C	42C1144-4	. . . GUIDE (Used with 22C1143-11 and -12)	1	
		Attaching Parts		
	AN365-524	. . . NUT	1	
	AN960D516	. . . WASHER	2	
		———*———		
	17C1120-1	. . PEDAL ASSEMBLY, Co-pilot's LH	1	
-51	17C1120-2	. . PEDAL ASSEMBLY, Co-pilot's RH	1	

Figure and Index Number	Part Number	1 2 3 4 5 6 7 Description	Units per Assembly	Usable On Code
52-		*Attaching Parts*		
-52	NAS51-87	. . RING, External retainer	1	
		———*———		
-53	14C1137-1	. . . BEARING	2	
-54	17C1120-3	. . . PEDAL, LH	1	
	17C1120-4	. . . PEDAL, RH	1	
-55	17C1116-1	. . LEVER ASSEMBLY, Pedal adjustment (used with 22C1011-1)	2	
	17C1116-10	. . LEVER ASSEMBLY, Pedal adjustment LH (used with 22C1011-4)	1	
	17C1116-11	. . LEVER ASSEMBLY, Pedal adjustment RH (used with 22C1011-4)	1	
-56	22C1114-1	. . PLATE ASSEMBLY, Co-pilot's pedal adjustment	1	
-57	22C1114-2	. . PLATE ASSEMBLY, Co-pilot's pedal adjustment	1	
		Attaching Parts		
-58	AN386-2-14	. . PIN, Taper	2	
	AN381-2-8	. . PIN, Cotter	2	
	AN320-3	. . NUT	2	
	AN975-3	. . WASHER	2	
		———*———		
	22C1118-1	. . . STOP, Pedal adjustment	2	
	22C1116-1	. . . ARM, Pedal adjustment	1	
	22C1116-2	. . . ARM, Pedal adjustment	1	
-59	22C1120-1	. . ARM ASSEMBLY, Directional centering spring	1	
		Attaching Parts		
-60	AN3-21A	. . BOLT	1	
-61	AN4-13A	. . BOLT	2	
	AN365-1032	. . NUT	1	
	AN365-428	. . NUT	2	
	AN960D10	. . WASHER	2	
	AN960D416	. . WASHER	2	
	AN960D416L	. . WASHER	2	
		———*———		
	42C1136-1	. . SUPPORT ASSEMBLY, Left brake	1	J,KM
	42C1136-5	. . SUPPORT ASSEMBLY, Left brake	1	JA,EW
-62	17C1138-1	. . . RETAINER, Bearing (used with 42C1136-1)	2	
		Attaching Parts		
-63	AN526-632-9	. . . SCREW (Used with 42C1136-1)	3	
	AN365-632	. . . NUT (Used with 42C1136-1)	3	
	AN960D6	. . . WASHER (Used with 42C1136-1)	3	
		———*———		
-64	42C1141-1	. . . BEARING	1	
-65	42C1136-2	. . . PLATE (Used with 42C1136-1)	1	
	42C1136-6	. . . PLATE (Used with 42C1136-5)	1	
-66	17C1142-2	. . COLLAR, Left brake support spacer	1	
-67	17C1123-10	. . TUBE ASSEMBLY, Foot pedal controls torque	1	
-68	17C1123-11	. . TUBE ASSEMBLY, Foot pedal controls torque	1	
-69	22C1112-1	. . STOP ASSEMBLY, Pedal limit (used with 22C1011-1)	1	
	42C1112-1	. . STOP ASSEMBLY, Pedal limit (used with 22C1011-4)	1	
		Attaching Parts		
-70	AN4-6A	. . BOLT	4	
	AN365-428	. . NUT	4	
	AN960D416	. . WASHER	4	
	AN960D416L	. . WASHER	4	
		———*———		
-71	3C1621-3	. . . BOLT	2	
	AN364-428	. . . NUT	2	
	17C1137-5	. . . BUSHING (Used with 22C1112-1)	2	
	1452-048	. . . NUT, Barrel (EN) (used with 42C1112-1)	2	

Controls

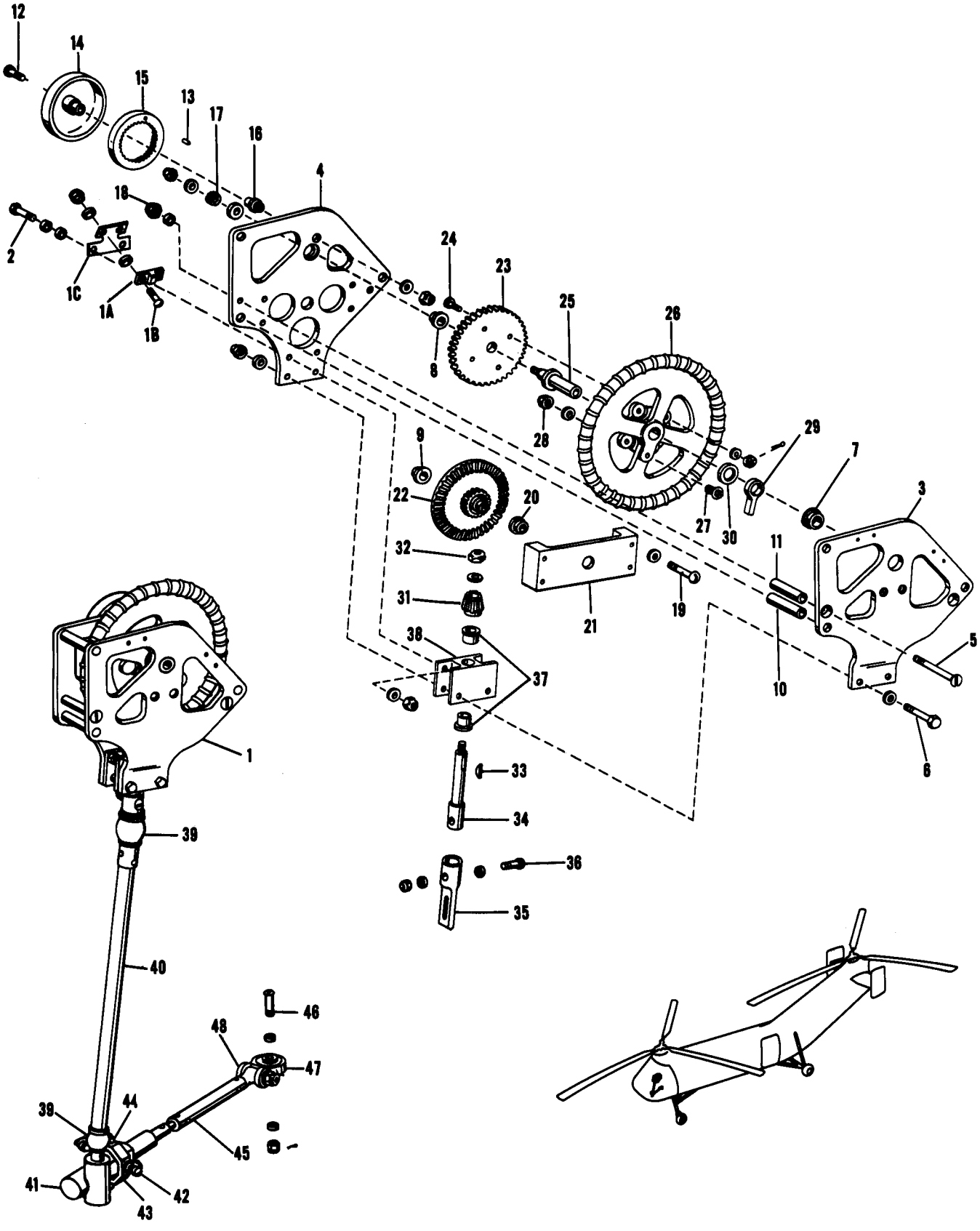

Figure 53. Longitudinal Stick Positioner

Figure and Index Number	Part Number	1 2 3 4 5 6 7 Description	Units per Assembly	Usable On Code
53-1	17C1150-2	MECHANISM ASSEMBLY, Longitudinal stick positioner (trim)	1	J,DW
	17C1150-3	MECHANISM ASSEMBLY, Longitudinal stick positioner (trim)	1	DX
	17C1150-4	MECHANISM ASSEMBLY, Longitudinal stick positioner (trim)	1	BY,HU
-1A	42C1154-1	. PAD	1	BY,HU
		Attaching Parts		
-1B	AN515-6-6	. SCREW	2	BY,HU
	AN363-632	. NUT	2	BY,HU
	AN960-6L	. WASHER	AR	BY,HU
		———*———		
-1C	42C1153-1	. PLATE, Spring	1	BY,HU
		Attaching Parts		
-2	AN3-6A	. BOLT	2	
	AN365-1032	. NUT	2	
	AN960D10	. WASHER	AR	
		———*———		
-3	17C1151-5	. FRAME ASSEMBLY	1	
-4	17C1151-6	. FRAME ASSEMBLY	1	
		Attaching Parts		
-5	AN509-10-4	. SCREW	2	
-6	AN3-17A	. BOLT	2	
	AN365-1032	. NUT	4	
	AN960D10	. WASHER	6	
		———*———		
-7	17C1152-2	. . BUSHING	1	
-8	17C1152-3	. . BUSHING	1	
-9	17C1152-4	. . BUSHING	1	
-10	17C1158-1	. SPACER	3	
-11	17C1158-2	. SPACER	2	
	17C1164-4	. DIAL ASSEMBLY, Type A and B	1	
		Attaching Parts		
-12	AN23-14A	. BOLT	1	
	AN365-1032	. NUT	1	
	AN960D10L	. WASHER	1	
		———*———		
-13	17C1164-3	. . PIN	1	
-14	17C1164-5	. . DIAL (Used with 17C1164-4 type A)	1	
	or			
	17C1164-6	. . DIAL (Used with 17C1164-4 type B)	1	
-15	G633	. . GEAR (BGW)	1	
-16	17C1163-1	. SHAFT, Indicator	1	
-17	17C1166-1	. GEAR, Spur	1	
		Attaching Parts		
-18	AN364-1032	. NUT	1	
	AN960D10L	. WASHER	1	
	AN960D416	. WASHER	1	
		———*———		
	17C1161-1	. HOUSING ASSEMBLY, Bevel	1	
		Attaching Parts		
-19	AN23-20A	. BOLT	4	
	AN365-1032	. NUT	4	
	AN960D10L	. WASHER	8	
		———*———		
-20	17C1152-4	. . BUSHING	1	
-21	17C1161-2	. . HOUSING	1	
-22	17C1170-1	. GEAR, Bevel and spur	1	
	42C1151-1	. SHIM	AR	
-23	17C1168-1	. GEAR, Spur	1	
		Attaching Parts		
-24	AN21-10	. BOLT	4	
	AN381-1-8	. PIN, Cotter	4	
	AN320-1	. NUT	4	

Figure and Index Number	Part Number	Description 1 2 3 4 5 6 7	Units per Assembly	Usable On Code
53-	AN960D6	. WASHER	4	
		———*———		
-25	17C1153-1	. SHAFT	1	
-26	17C1160-1	. HANDWHEEL	1	
-27	17C1157-1	. PIN, Limit stop	1	
		Attaching Parts		
-28	AN364-1032	. NUT	1	
	AN960D10	. WASHER	1	
		———*———		
	AN960-716L	. WASHER (Shim as necessary)	AR	
-29	17C1155-1	. IDLER, Limit stop	1	
-30	AN960C716	. WASHER	1	
-31	17C1167-1	. GEAR, Pinion	1	
		Attaching Parts		
-32	AN365-428	. NUT	1	
	AN960-416L	. WASHER	1	
		———*———		
-33	AN280-H204	. KEY, Woodruff	1	
-34	17C1165-1	. SHAFT, Pinion	1	
-35	22C1178-1	. ADAPTER	1	B
		Attaching Parts		
-36	AN23-16A	. BOLT	1	B
	AN365-1032	. NUT	1	B
	AN960D10	. WASHER	1	B
	AN960D10L	. WASHER	1	B
		———*———		
	17C1154-1	. HOUSING ASSEMBLY, Pinion	1	
-37	17C1152-1	. . BUSHING	2	
-38	17C1154-2	. . HOUSING	1	
	22C1012-1	UNIT INSTALLATION, Longitudinal stick positioner (trim)	1	A
	22C1012-4	UNIT INSTALLATION, Longitudinal stick positioner (trim)	1	W
	22C1012-5	UNIT INSTALLATION, Longitudinal stick positioner (trim)	1	BM
	22C1012-7	UNIT INSTALLATION, Longitudinal stick positioner (trim)	1	BN,AU
-39	AN271B10	. JOINT, Universal	2	A
		Attaching Parts		
	AN23-15A	. BOLT	2	A
	AN365-1032	. NUT	2	A
	AN960-10	. WASHER	2	A
		———*———		
-40	22C1152-1	. TUBE, Torque	1	A
	22C1160-1	. TUBE ASSEMBLY, Torque (complete with AN271B10 universal joints)	1	B
		Attaching Parts		
	AN3-10A	. BOLT	2	B
	AN365-1032	. NUT	2	B
	AN960PD10	. WASHER	2	B
	AN960PD10L	. WASHER	2	B
		———*———		
-41	AL2385	. ACTUATOR (BC)	1	
		Attaching Parts		
-42	22C1150-1	. BOLT	2	
	AN316-5R	. NUT	2	
	AN995F41	. WIRE, Lock	AR	
		———*———		
-43	42C1148-1	. BLOCK, Trunnion	1	
		Attaching Parts		
-44	AN24-10A	. BOLT	2	
	AN365-428	. NUT	2	
	AN960D416	. WASHER	2	
		———*———		
	NAS77A4-18P	. BUSHING	2	Y
	NAS77-4-16	. BUSHING	2	BN,AU

Figure and Index Number	Part Number	1 2 3 4 5 6 7 Description	Units per Assembly	Usable On Code
53-45	22C1151-1	. ROD ASSEMBLY	1	
		Attaching Parts		
-46	AN24-20	. BOLT	1	
	AN381-2-12	. PIN, Cotter	1	
	AN310-4	. NUT	1	
	AN960D416	. WASHER	1	
	AN960D416L	. WASHER	1	
		———*———		
-47	17C1179-1	. . LINK ASSEMBLY, Universal	1	
		Attaching Parts		
-48	AN24-18	. . BOLT	1	
	AN381-2-12	. . PIN, Cotter	1	
	AN320-4	. . NUT	1	
	AN960-416	. . WASHER	1	
		———*———		

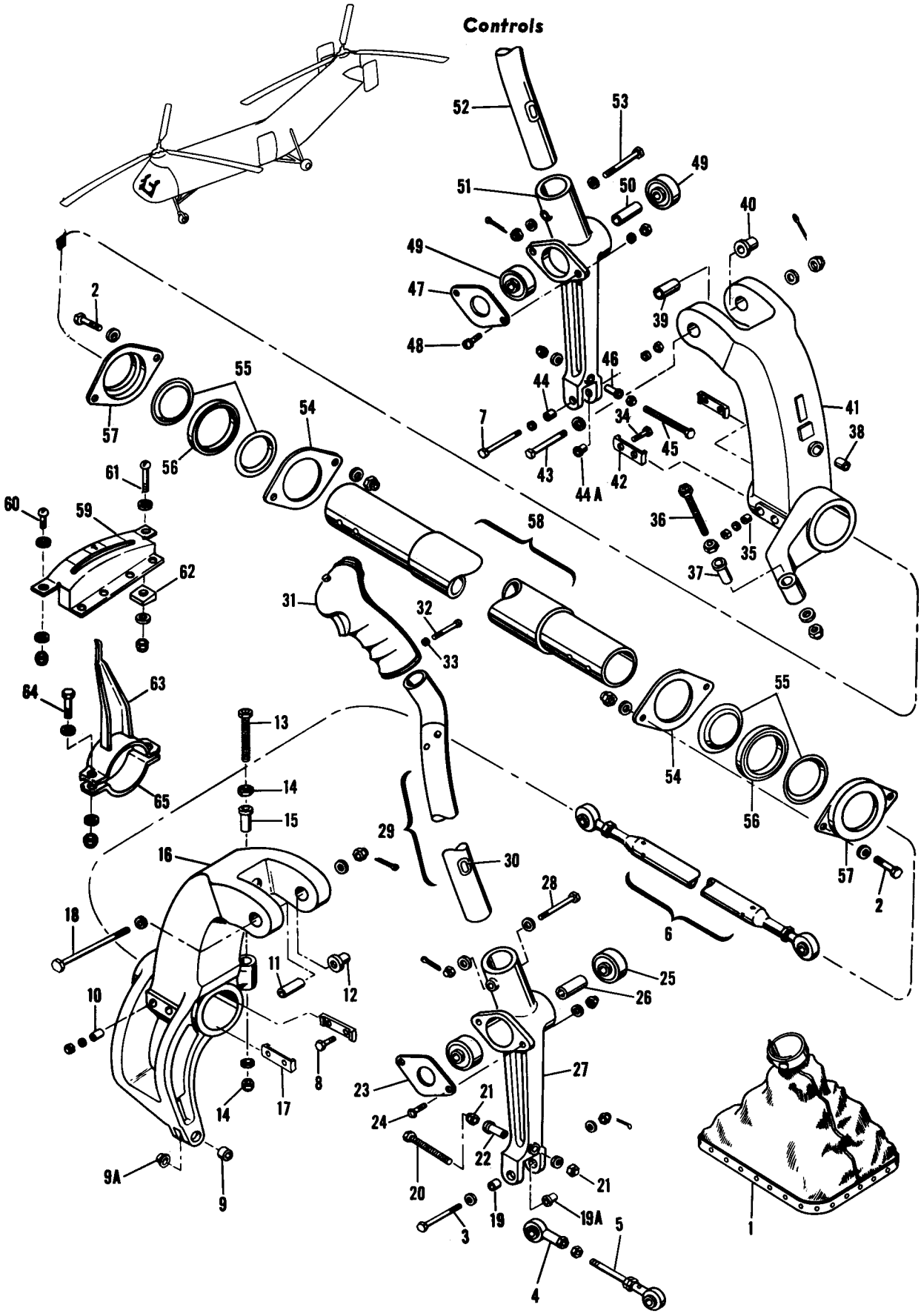

Figure 54. Cyclic Control Stick, Boots, and Indicator

Figure and Index Number	Part Number	Description 1 2 3 4 5 6 7	Units per Assembly	Usable On Code
54-1	17C1222-15	BOOT ASSEMBLY, Cyclic control stick	2	J,EM
	17C1222-25	BOOT ASSEMBLY, Cyclic control stick	2	EI,EH
		Attaching Parts		
	2-0-140	FASTENER (LFK)	8	J,EM
	GOS-2-93	GROMMET (LFK)	8	J,EM
	2600-4	STUD (CLC)	6	EI,EH
	212-12N	RECEPTACLE (CLC)	6	EI,EH
	2600-SW	WASHER (CLC)	6	EI,EH
		———*———		
	17C1222-16	. BOOT SUBASSEMBLY	1	
	22C1013-1	STICK INSTALLATION, Cyclic control	1	J
	22C1013-3	STICK INSTALLATION, Cyclic control	1	AU
	22C1013-2	. STICK ASSEMBLY, Cyclic control	1	J
	22C1013-4	. STICK ASSEMBLY, Cyclic control	1	AU
		Attaching Parts		
-2	AN4-6A	. BOLT	4	
	AN365-428	. NUT	4	
	AN960D416	. WASHER	4	
	AN960D416L	. WASHER	4	
		———*———		
	22C1211-1	. . LINK ASSEMBLY	1	
		Attaching Parts		
-3	AN174-22	. . BOLT	1	
	AN381-2-10	. . PIN, Cotter	1	
	AN310-4	. . NUT	1	
	AN960D416	. . WASHER	1	
	AN960D416L	. . WASHER	1	
		———*———		
-4	RE4F5	. . . BEARING, Rod end (FAF)	1	
	AN316-5R	. . . NUT	1	
-5	22C1211-2	. . . ROD ASSEMBLY	1	
-6	22C1696-5	. . ROD ASSEMBLY, Lateral cyclic	1	
		Attaching Parts		
-7	AN174-15	. . BOLT	1	
	AN381-2-10	. . PIN, Cotter	1	
	AN310-4	. . NUT	1	
	AN960D416	. . WASHER	1	
	AN960D416L	. . WASHER	1	
		———*———		
	RE4M6	. . . BEARING, Rod end (FAF)	2	
	22C1204-3	. . HORN ASSEMBLY, Co-pilot's cyclic stick	1	
		Attaching Parts		
-8	AN176-11A	. . BOLT	4	
	AN364-624	. . NUT	4	
	AN960D616	. . WASHER	4	
		———*———		
-9	NAS75-4-012	. . . BUSHING	1	
-9A	NAS77-4-20	. . . BUSHING	1	
-10	NAS75-6-008	. . . BUSHING	4	
-11	NAS75-6-025	. . . BUSHING	1	
-12	NAS77-6-48	. . . BUSHING	1	
-13	3C1621-1	. . . BOLT, Stop	1	
		Attaching Parts		
-14	AN364-428	. . . NUT	2	
	AN960D416	. . . WASHER	1	
		———*———		
-15	NAS77-4-85	. . . BUSHING	1	
-16	22C1204-4	. . . HORN	1	
-17	22C1206-1	. . SHIM	2	
	22C1205-5	. . SOCKET ASSEMBLY, Co-pilot's cyclic stick	1	
	or			
	22C1205-1	. . SOCKET ASSEMBLY, Co-pilot's cyclic stick	1	

Figure and Index Number	Part Number	1 2 3 4 5 6 7 Description	Units per Assembly	Usable On Code
54-		*Attaching Parts*		
-18	AN176-42	. . BOLT	1	
	AN381-3-10	. . PIN, Cotter	1	
	AN310-6	. . NUT	1	
	AN960D616	. . WASHER	1	
	AN960D616L	. . WASHER	1	
		———*———		
-19	NAS75-4-012	. . . BUSHING (Used with 22C1205-5)	1	
	NAS75-4-011	. . . BUSHING (Used with 22C1205-1)	1	
-19A	NAS77-4-19	. . . BUSHING (Used with 22C1205-5)	1	
	NAS75-4-011	. . . BUSHING (Used with 22C1205-1)	1	
-20	3C1621-2	. . . BOLT, Stop	1	
		Attaching Parts		
-21	AN364-428	. . . NUT	2	
	AN960D416	. . . WASHER	1	
		———*———		
-22	NAS77-4-122	. . . BUSHING	1	
-23	22C1209-1	. . . RETAINER	1	
		Attaching Parts		
-24	AN24-12A	. . . BOLT	2	
	AN364-428	. . . NUT	2	
	AN960D416	. . . WASHER	2	
		———*———		
-25	AN200KP6	. . . BEARING	2	
-26	22C1753-6	. . . SPACER	1	
-27	22C1205-7	. . . SOCKET (Used with 22C1205-5)	1	
	22C1205-3	. . . SOCKET (Used with 22C1205-1)	1	
	22C1201-1	. . STICK ASSEMBLY, Cyclic pitch	1	J
	42C1201-5	. . STICK ASSEMBLY, Cyclic pitch	1	AU
	or			
	42C1201-1	. . STICK ASSEMBLY, Cyclic pitch	1	AU
		Attaching Parts		
-28	AN4-23A	. . BOLT	1	
	AN365-428	. . NUT	1	
	AN960D416	. . WASHER	2	
		———*———		
-29	22C1201-2	. . . TUBE ASSEMBLY	1	J
	42C1201-6	. . . TUBE ASSEMBLY (Used with 42C1201-5)	1	
	42C1201-2	. . . TUBE ASSEMBLY (Used with 42C1201-1)	1	
-30	AN931A8-13	. . . GROMMET	1	
-31	G-56052	. . . GRIP (GN)	1	J
	G-55961	. . . GRIP (GN)	1	AU
		Attaching Parts		
-32	US-104	. . . SCREW, Handle retainer (GN)	1	
-33	US-141	. . . WASHER, Lock (GN)	1	
		———*———		
	22C1200-3	. . HORN ASSEMBLY, Pilot's cyclic stick	1	
		Attaching Parts		
-34	AN176-11A	. . BOLT	4	
	AN364-624	. . NUT	4	
	AN960D616	. . WASHER	4	
		———*———		
-35	NAS75-6-006	. . . BUSHING	4	
-36	3C1621-2	. . . BOLT, Stop	1	
		Attaching Parts		
	AN364-428	. . . NUT	2	
	AN960D416	. . . WASHER	1	
		———*———		
-37	NAS77-4-100	. . . BUSHING	1	
-38	NAS75-3-009	. . . BUSHING	2	

Figure and Index Number	Part Number	1 2 3 4 5 6 7 Description	Units per Assembly	Usable On Code
54-39	NAS75-6-025	. . . BUSHING	1	
-40	NAS77-6-48	. . . BUSHING	1	
-41	22C1200-4	. . . HORN	1	
-42	22C1206-1	. . SHIM	2	
	22C1205-6	. . SOCKET ASSEMBLY, Pilot's cyclic stick	1	
	or			
	22C1205-2	. . SOCKET ASSEMBLY, Pilot's cyclic stick	1	
		Attaching Parts		
-43	AN176-42	. . BOLT	1	
	AN381-3-10	. . PIN, Cotter	1	
	AN310-6	. . NUT	1	
	AN960D616	. . WASHER	1	
	AN960D616L	. . WASHER	1	
		———*———		
-44	NAS75-4-012	. . . BUSHING (Used with 22C1205-6)	1	
	NAS75-4-011	. . . BUSHING (Used with 22C1205-2)	1	
-44A	NAS77-4-20	. . . BUSHING (Used with 22C1205-6)	1	
	NAS75-4-011	. . . BUSHING (Used with 22C1205-2)	1	
-45	3C1621-2	. . . BOLT, Stop	1	
		Attaching Parts		
	AN364-428	. . . NUT	2	
	AN960D416	. . . WASHER	1	
		———*———		
-46	NAS77-4-122	. . . BUSHING	1	
-47	22C1209-1	. . . RETAINER	1	
		Attaching Parts		
-48	AN24-12A	. . . BOLT	2	
	AN364-428	. . . NUT	2	
	AN960D416	. . . WASHER	2	
		———*———		
-49	AN200KP6	. . . BEARING	2	
-50	22C1753-6	. . . SPACER	1	
-51	22C1205-8	. . . SOCKET (Used with 22C1205-6)	1	
	22C1205-4	. . . SOCKET (Used with 22C1205-2)	1	
-52	22C1201-1	. . STICK ASSEMBLY, Cyclic pitch	1	J
	42C1201-5	. . STICK ASSEMBLY, Cyclic pitch	1	AU
	or			
	42C1201-1	. . STICK ASSEMBLY, Cyclic pitch	1	AU
		Attaching Parts		
-53	AN4-23A	. . BOLT	1	
	AN365-428	. . NUT	1	
	AN960D416	. . WASHER	2	
		———*———		
	22C1201-2	. . . TUBE ASSEMBLY	1	J
	42C1201-6	. . . TUBE ASSEMBLY (Used with 42C1201-5)	1	
	42C1201-2	. . . TUBE ASSEMBLY (Used with 42C1201-1)	1	
	AN931A8-13	. . . GROMMET	1	
	G-56052	. . . GRIP (GN)	1	J
	G-55961	. . . GRIP (GN)	1	AU
		Attaching Parts		
	US-104	. . . SCREW (GN)	1	
	US-141	. . . WASHER, Lock (GN)	1	
		———*———		
-54	17C1209-1	. . PLATE	2	
-55	17C1223-1	. . RETAINER, Bearing	4	
-56	B546	. . BEARING (FAF)	2	
-57	17C1208-1	. . HOUSING	2	
-58	22C1203-1	. . TUBE, Torque	1	
	17C1276-13	INDICATOR ASSEMBLY, Longitudinal pitch	1	J
	17C1276-8	INDICATOR ASSEMBLY, Longitudinal pitch	1	AU

Figure and Index Number	Part Number	1 2 3 4 5 6 7 Description	Units per Assembly	Usable On Code
54-59	17C1276-9	. SCALE ASSEMBLY	1	
		Attaching Parts		
-60	AN525-10-8	. SCREW	5	
-61	AN525-10-14	. SCREW	1	AU
	AN364-1032	. NUT	5	J
	AN364-1032	. NUT	6	AU
	AN960D10L	. WASHER	10	J
	AN960D10L	. WASHER	12	AU
		———*———		
-62	17C1276-5	. WEDGE	1	AU
-63	17C1276-11	. POINTER ASSEMBLY	1	
		Attaching Parts		
-64	AN4-6A	. BOLT	2	
	AN364-428	. NUT	2	
	AN960D416L	. WASHER	4	
		———*———		
-65	AN741HTD-19	. CLAMP	1	

Controls

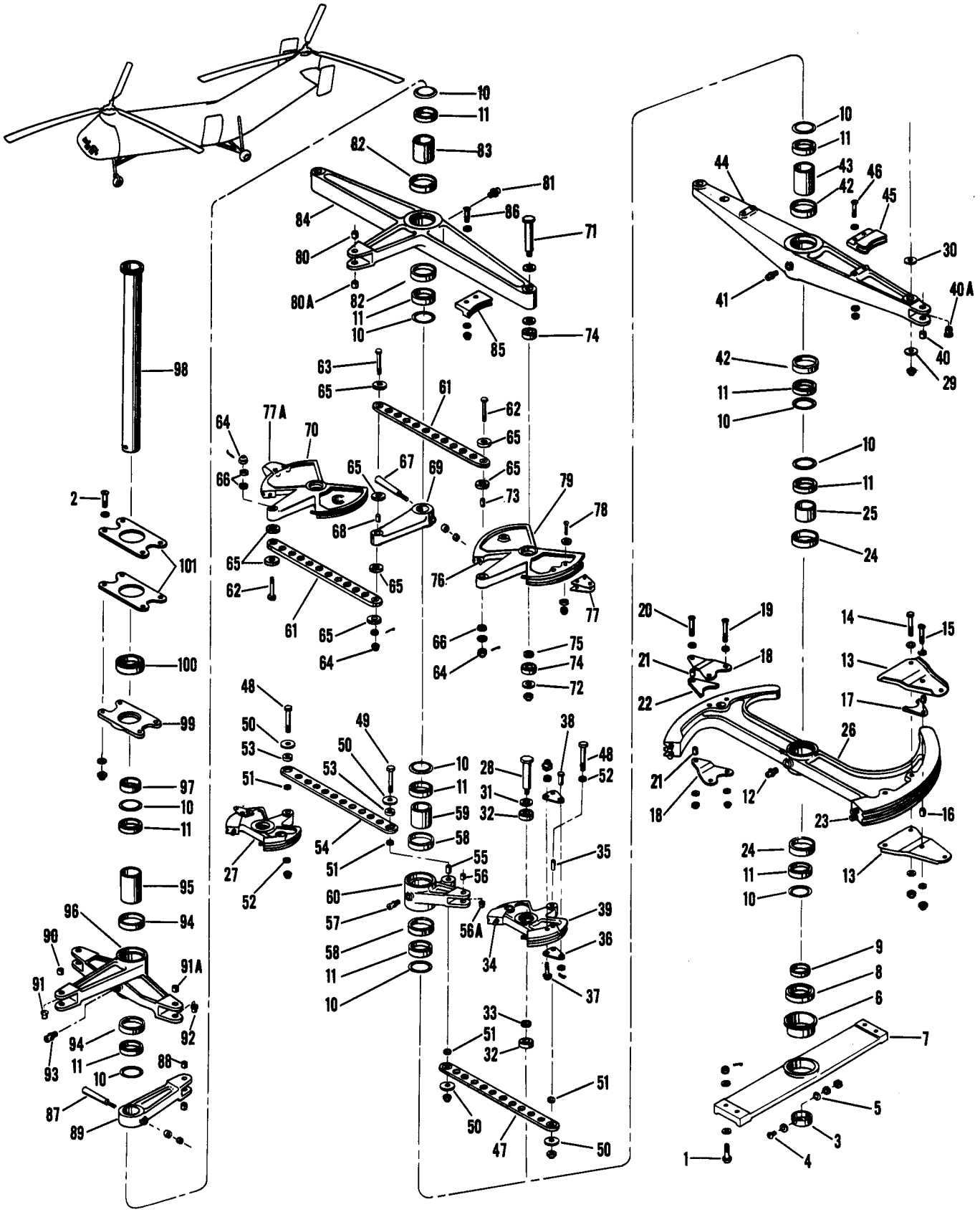

Figure 55. Lower Differential Controls, YH-21 and H-21A

Figure and Index Number	Part Number	Description 1 2 3 4 5 6 7	Units per Assembly	Usable On Code
55-	22C1014-4	CONTROL INSTALLATION, Lower differential	1	J
	or			
	22C1014-1	CONTROL INSTALLATION, Lower differential	1	J
	22C1014-5	. CONTROL ASSEMBLY, Lower differential (used with 22C1014-4)	1	J
	22C1014-2	. CONTROL ASSEMBLY, Lower differential (used with 22C1014-1)	1	J
		Attaching Parts		
-1	AN4-10	. BOLT	4	J
-2	AN24-16A	. BOLT	4	
	AN381-2-12	. PIN, Cotter	4	J
	AN310-4	. NUT	4	J
	AN364-428	. NUT	4	
	AN960D416	. WASHER	8	
	AN960D416L	. WASHER	8	
		———*———		
-3	22C1282-8	. . SPACER	1	
		Attaching Parts		
-4	AN23-10A	. . BOLT	2	
	AN364-1032	. . NUT	2	
	AN960D10	. . WASHER	4	
-5	AN955-3	. . WASHER	2	
		———*———		
	22C1288-1	. . SUPPORT ASSEMBLY, Bearing	1	
-6	22C1259-1	. . . BUSHING	1	
-7	22C1288-2	. . . SUPPORT	1	
-8	AN202KP21B	. . BEARING	1	
-9	22C1282-7	. . SPACER	1	
-10	17C1254-1	. . RETAINER	10	
-11	B542	. . BEARING (FAF)	10	
	22C1252-3	. . QUADRANT ASSEMBLY, Longitudinal	1	
	or			
	22C1252-1	. . QUADRANT ASSEMBLY, Longitudinal	1	
-12	MS15002-1	. . . FITTING, Lubricator	1	
-13	22C1262-1	. . . PLATE	2	
		Attaching Parts		
-14	AN174-15A	. . . BOLT	2	
-15	AN23-20A	. . . BOLT	1	
	AN364-428	. . . NUT	2	
	AN364-1032	. . . NUT	1	
	AN960D416	. . . WASHER	2	
	AN960D416L	. . . WASHER	2	
	AN960D10	. . . WASHER	1	
	AN960D10L	. . . WASHER	1	
		———*———		
-16	22C1753-18	. . . BUSHING	2	
-17	22C1265-4	. . . GUARD, Cable	1	
-18	22C1264-3	. . . PLATE	2	
		Attaching Parts		
-19	AN23-24A	. . . BOLT	2	
-20	AN23-20A	. . . BOLT	1	
	AN364-1032	. . . NUT	3	
	AN960D10	. . . WASHER	3	
	AN960D10L	. . . WASHER	3	
		———*———		
-21	22C1753-18	. . . BUSHING	2	
-22	22C1265-3	. . . GUARD, Cable	1	
-23	AN150520	. . . STUD	4	
	AN150521	. . . STUD (0.003 in. oversize)	AR	
-24	42C1622-1	. . . SPACER (Used with 22C1252-3)	2	
	22C1622-6	. . . BUSHING (Used with 22C1252-1)	2	
-25	22C1282-6	. . . SPACER (Used with 22C1252-1)	1	
-26	22C1252-4	. . . QUADRANT (Used with 22C1252-3)	1	
	22C1252-2	. . . QUADRANT (Used with 22C1252-1)	1	

Figure and Index Number	Part Number	Description 1 2 3 4 5 6 7	Units per Assembly	Usable On Code
55-27	22C1250-1	. . QUADRANT ASSEMBLY, Trim	2	
		Attaching Parts		
-28	22C1269-1	. . BOLT, Shoulder	1	
	AN364-428	. . NUT	1	
■ -29	42C1230-1	. . WASHER	1	
-30	AN960-816L	. . WASHER	1	
-31	AN960D816L	. . WASHER	1	
		———*———		
-32	AN201KP8A	. . . BEARING	2	
-33	22C1753-40	. . . SPACER	1	
-34	AN150520	. . . STUD	2	
	AN150521	. . . STUD (0.003 in. oversize)	AR	
-35	NAS75-4-022	. . . BUSHING	1	
-36	22C1264-1	. . . PLATE	2	
		Attaching Parts		
-37	AN23-16A	. . . BOLT	2	
-38	AN392-23	. . . PIN, Flat hd	1	
	AN364-1032	. . . NUT	2	
	AN381-2-5	. . . PIN, Cotter	1	
	AN960D10L	. . . WASHER	2	
	AN960D4	. . . WASHER	1	
		———*———		
-39	22C1250-2	. . . QUADRANT	1	
	22C1251-3	. . BEAM ASSEMBLY, Collective pitch walking	1	
	or			
	22C1251-1	. . BEAM ASSEMBLY, Collective pitch walking	1	
-40	NAS75-4-012	. . . BUSHING (Used with 22C1251-4)	1	
	NAS75-4-011	. . . BUSHING (Used with 22C1251-2)	1	
-40A	NAS77-4-18	. . . BUSHING (Used with 22C1251-4)	1	
	NAS75-4-010	. . . BUSHING (Used with 22C1251-2)	1	
-41	MS15002-1	. . . FITTING, Lubricator	1	
-42	42C1622-1	. . . SPACER (Used with 22C1251-3)	2	
	22C1622-6	. . . BUSHING (Used with 22C1251-1)	2	
-43	22C1282-5	. . . SPACER (Used with 22C1251-1)	1	
-44	22C1251-4	. . . BEAM, Walking (used with 22C1251-3)	1	
	22C1251-2	. . . BEAM, Walking (used with 22C1251-1)	1	
-45	42C1298-1	. . GUARD, Cable	2	
		Attaching Parts		
-46	AN23-24A	. . BOLT (Shown)	2	
	AN23-19A	. . BOLT (Opposite)	2	
	AN364-1032	. . NUT	2	
	AN960D10	. . WASHER	2	
	AN960D10L	. . WASHER	2	
		———*———		
-47	22C1284-3	. . LINK ASSEMBLY (Used with 22C1014-5)	2	
	22C1284-1	. . LINK ASSEMBLY (Used with 22C1014-2)	2	
		Attaching Parts		
-48	NAS464-4A-17	. . BOLT	2	J
-49	NAS464-4A-22	. . BOLT	1	J
	AN364-428	. . NUT	3	J
-50	22C1014-3	. . WASHER	4	
-51	AN960-416L	. . WASHER	4	
-52	AN960D416L	. . WASHER	2	
		———*———		
-53	AN201KP4A	. . . BEARING	2	
-54	22C1284-4	. . . LINK (Used with 22C1284-3)	1	
	22C1284-2	. . . LINK (Used with 22C1284-1)	1	
	22C1253-3	. . BELLCRANK ASSEMBLY, Trim	1	
	or			
	22C1253-1	. . BELLCRANK ASSEMBLY, Trim	1	
-55	NAS75-4-022	. . . BUSHING	1	
-56	NAS75-4-009	. . . BUSHING (Used with 22C1253-4)	1	

Figure and Index Number	Part Number	Description 1 2 3 4 5 6 7	Units per Assembly	Usable On Code
55-56A	NAS77-4-16	. . . BUSHING (Used with 22C1253-4)	1	
	NAS75-4-007	. . . BUSHING (Used with 22C1253-2)	2	
■ -57	MS15002-1	. . . FITTING, Lubricator	1	
-58	42C1622-1	. . . SPACER (Used with 22C1253-3)	2	
	22C1622-6	. . . BUSHING (Used with 22C1253-1)	2	
-59	22C1282-4	. . . SPACER (Used with 22C1253-1)	1	
-60	22C1253-4	. . . BELLCRANK (Used with 22C1253-3)	1	
	22C1253-2	. . . BELLCRANK (Used with 22C1253-1)	1	
-61	22C1284-3	. . LINK ASSEMBLY (Used with 22C1014-5)	4	
	22C1284-1	. . LINK ASSEMBLY (Used with 22C1014-2)	4	
		Attaching Parts		
-62	AN174-15	. . BOLT	2	J
-63	AN174-20	. . BOLT	1	J
	AN381-2-12	. . PIN, Cotter	3	J
-64	AN310-4	. . NUT	3	J
-65	22C1014-3	. . WASHER	8	J
	AN960-416L	. . WASHER	1	
-66	AN960D416	. WASHER	4	
		———*———		
	22C1037-1	. . LEVER ASSEMBLY, Directional lower (used with 22C1014-5)	1	J
	22C1255-1	. . LEVER ASSEMBLY, Directional lower (used with 22C1014-2)	1	J
		Attaching Parts		
-67	AN386-2-17A	. . PIN, Taper	1	
	AN364-1032	. . NUT	1	
	AN975-3	. . WASHER	1	
		———*———		
-68	NAS75-4-022	. . . BUSHING (Used with 22C1255-1)	1	J
-69	22C1255-2	. . . LEVER (Used with 22C1255-1)	1	J
-70	22C1257-5	. . QUADRANT ASSEMBLY, Directional lateral (used with 22C1014-5)	2	
	22C1257-1	. . QUADRANT ASSEMBLY, Directional lateral (used with 22C1014-2)	1	
	22C1257-3	. . QUADRANT ASSEMBLY, Directional lateral (used with 22C1014-2)	1	
		Attaching Parts		
-71	22C1269-1	. . BOLT, Shoulder	1	
	AN364-428	. . NUT	1	
-72	22C1014-3	. . WASHER	1	J
	AN960-816L	. . WASHER (Between quadrant and walking beam)	1	
	AN960D816L	. . WASHER (Under bolt hd)	1	
		———*———		
-73	NAS75-4-022	. . . BUSHING	1	J
-74	AN201KP8A	. . . BEARING	2	
-75	22C1753-40	. . . SPACER	1	
-76	AN150520	. . . STUD	2	
	AN150521	. . . STUD (0.003 in. oversize)	AR	
-77	22C1264-2	. . . PLATE, Cable guard (used with 22C1257-1)	2	
-77A	22C1264-4	. . . GUARD, Cable (used with 22C1257-3 and -5)	1	
		Attaching Parts		
-78	AN23-16A	. . . BOLT	2	
	AN392-17	. . . PIN, Flat hd	1	
	AN381-2-5	. . . PIN, Cotter	1	
	AN364-1032	. . . NUT	2	
	AN960D10L	. . . WASHER	2	
	AN960D4	. . . WASHER	1	
		———*———		
-79	22C1257-6	. . . QUADRANT (Used with 22C1257-5)	1	
	22C1257-2	. . . QUADRANT (Used with 22C1257-1 and -3)	1	
	22C1254-3	. . BEAM ASSEMBLY, Lateral walking (used with 22C1014-5)	1	
	22C1254-1	. . BEAM ASSEMBLY, Lateral walking (used with 22C1014-2)	1	
-80	NAS75-4-013	. . . BUSHING (Used with 22C1254-3)	1	
	NAS75-4-010	. . . BUSHING (Used with 22C1254-1)	1	
-80A	NAS77-4-18	. . . BUSHING (Used with 22C1254-3)	1	
	NAS75-4-010	. . . BUSHING (Used with 22C1254-1)	1	

Figure and Index Number	Part Number	Description 1 2 3 4 5 6 7	Units per Assembly	Usable On Code
■ 55-81	MS15002-1	. . . FITTING, Lubricator	1	
-82	42C1622-3	. . . SPACER (Used with 22C1254-3)	2	
	22C1622-6	. . . BUSHING (Used with 22C1254-1)	2	
-83	22C1282-3	. . . SPACER (Used with 22C1254-1)	1	
-84	22C1254-4	. . . BEAM, Walking (used with 22C1254-3)	1	J
	22C1254-2	. . . BEAM, Walking (used with 22C1254-1)	1	J
-85	22C1265-2	. . GUARD, Cable	2	J
		Attaching Parts		
-86	AN23-19A	. . BOLT	2	J
	AN364-1032	. . NUT	2	J
	AN960D10	. . WASHER	2	J
	AN960D10L	. . WASHER	2	J
		———*———		
	22C1038-1	. . LEVER ASSEMBLY, Directional upper (used with 22C1014-5)	1	J
	22C1256-1	. . LEVER ASSEMBLY, Directional upper (used with 22C1014-2)	1	J
		Attaching Parts		
-87	AN386-2-17A	. . PIN, Taper	1	
	AN364-1032	. . NUT	1	
	AN975-3	. . WASHER	1	
		———*———		
-88	NAS77-4-009	. . . BUSHING (Used with 22C1038-1)	1	J
	NAS77-4-17	. . . BUSHING (Used with 22C1038-1)	1	J
	NAS75-4-010	. . . BUSHING (Used with 22C1256-1)	2	J
-89	22C1038-2	. . . LEVER (Used with 22C1038-1)	1	J
	22C1256-2	. . . LEVER (Used with 22C1256-1)	1	J
	22C1260-5	. . BELLCRANK ASSEMBLY, Directional	1	
	or			
	22C1260-3	. . BELLCRANK ASSEMBLY, Directional	1	
	or			
	22C1260-1	. . BELLCRANK ASSEMBLY, Directional	1	
-90	NAS75-4-011	. . . BUSHING (Used with 22C1260-3 and -5)	1	
	NAS75-4-010	. . . BUSHING (Used with 22C1260-1)	1	
-91	NAS77-4-19	. . . BUSHING (Used with 22C1260-3 and -5)	1	
	NAS75-4-011	. . . BUSHING (Used with 22C1260-1)	1	
-91A	NAS75-4-012	. . . BUSHING (Used with 22C1260-5)	2	
	NAS75-4-011	. . . BUSHING (Used with 22C1260-3)	2	
	NAS75-4-010	. . . BUSHING (Used with 22C1260-1)	2	
-92	NAS77-4-21	. . . BUSHING (Used with 22C1260-3 and -5)	2	
	NAS75-4-011	. . . BUSHING (Used with 22C1260-1)	2	
■ -93	MS15002-1	. . . FITTING, Lubricator	1	
-94	42C1622-1	. . . SPACER (Used with 22C1260-3 and -5)	2	
	22C1622-6	. . . BUSHING (Used with 22C1260-1)	2	
-95	22C1282-2	. . . SPACER (Used with 22C1260-1)	1	
-96	22C1260-6	. . . BELLCRANK (Used with 22C1260-5)	1	
	22C1260-4	. . . BELLCRANK (Used with 22C1260-3)	1	
	22C1260-2	. . . BELLCRANK (Used with 22C1260-1)	1	
-97	22C1282-1	. . SPACER	1	
-98	22C1283-2	. . SHAFT, Lower differential control unit (used with 22C1014-5)	1	
	22C1283-1	. . SHAFT, Lower differential control unit (used with 22C1014-2)	1	
-99	22C1258-1	. . HOUSING, Upper bearing	1	
-100	AN202KP21B	. . BEARING	1	
-101	22C1263-1	. . PLATE, Upper bearing housing	2	
	22C1014-100	LOWER DIFFERENTIAL CONTROL ASSEMBLY, See fig. 55A (special spare parts assembly)	Ref	

Controls

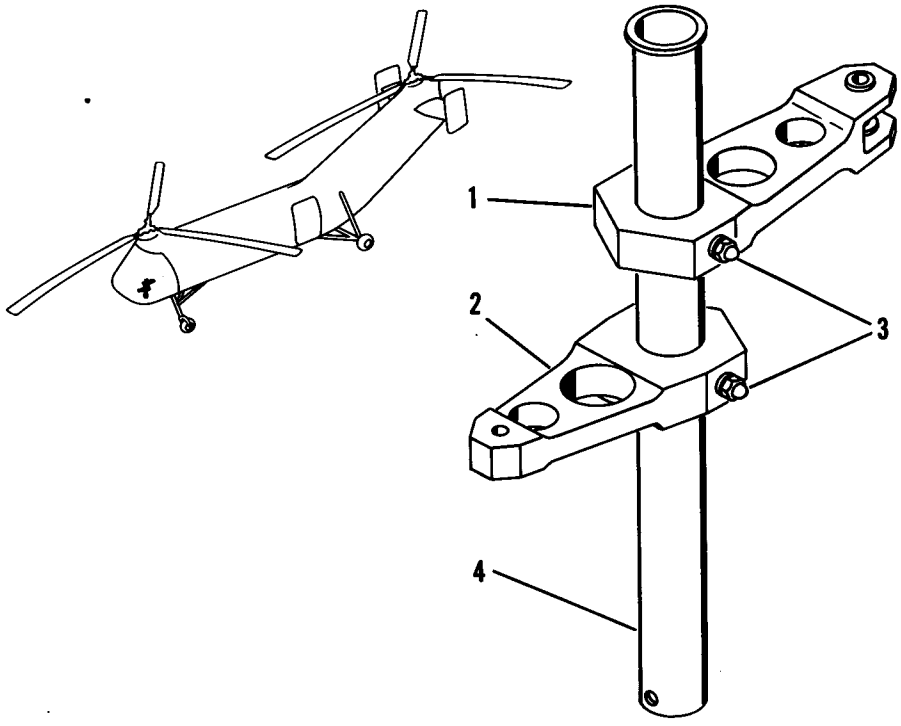

Figure 55A. Lower Differential Control (Special Spare Parts Assembly)

Figure and Index Number	Part Number	Description 1 2 3 4 5 6 7	Units per Assembly	Usable On Code
55A-	22C1014-100	LOWER DIFFERENTIAL CONTROL ASSEMBLY (Special spare parts assembly)	1	J
-1	22C1038-1	. LEVER ASSEMBLY	1	J
-2	22C1037-1	. LEVER ASSEMBLY	1	J
		Attaching Parts		
-3	AN386-2-19A	. PIN, Taper	2	J
	AN364-1032	. NUT	2	J
	AN975-3	. WASHER	2	J
		———*———		
-4	22C1283-2	. SHAFT	1	J

Controls

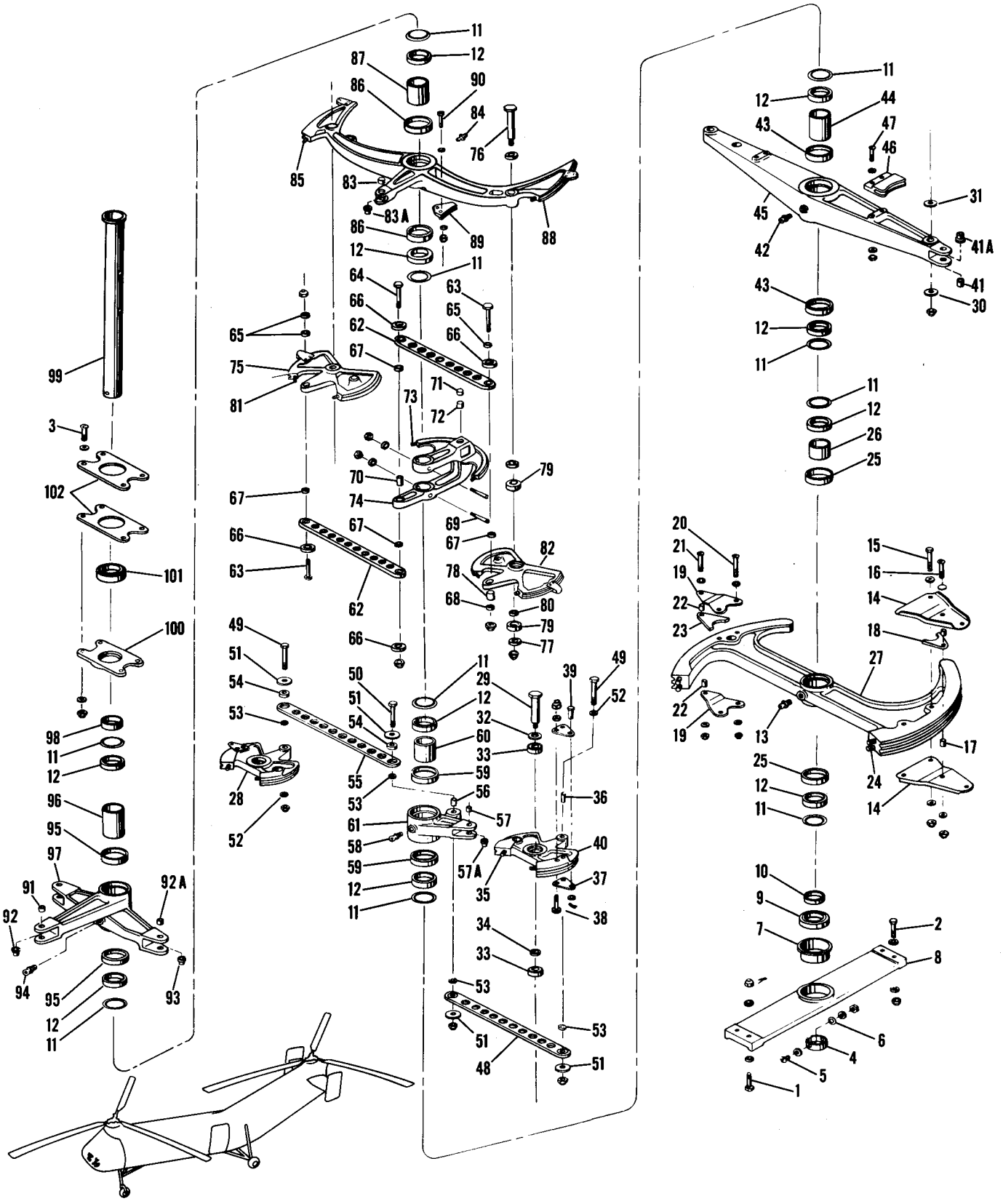

Figure 56. Lower Differential Controls, H-21B and H-21C

Figure and Index Number	Part Number	Description 1 2 3 4 5 6 7	Units per Assembly	Usable On Code
56-	42C1014-3	CONTROL INSTALLATION, Lower differential	1	AU
	or			
	42C1014-1	CONTROL INSTALLATION, Lower differential	1	AU
	42C1014-5	. CONTROL ASSEMBLY, Lower differential (used with 42C1014-3)	1	AU
	42C1014-2	. CONTROL ASSEMBLY, Lower differential (used with 42C1014-1)	1	AU
		Attaching Parts		
-1	AN4-10	. BOLT	2	AU
-2	AN4-10A	. BOLT	2	AU
-3	AN24-16A	. BOLT	4	
	AN381-2-12	. PIN, Cotter	2	AU
	AN310-4	. NUT	2	AU
	AN365-428	. NUT	2	AU
	AN364-428	. NUT	4	
	AN960D416	. WASHER	8	
	AN960D416L	. WASHER	8	
		———*———		
-4	22C1282-8	. . SPACER	1	
		Attaching Parts		
-5	AN23-10A	. . BOLT	2	
	AN364-1032	. . NUT	2	
	AN960D10	. . WASHER	4	
-6	AN955-3	. . WASHER	2	
		———*———		
	22C1288-1	. . SUPPORT ASSEMBLY, Bearing	1	
-7	22C1259-1	. . . BUSHING	1	
-8	22C1288-2	. . . SUPPORT	1	
-9	AN202KP21B	. . BEARING	1	
-10	22C1282-7	. . SPACER	1	
-11	17C1254-1	. . RETAINER	10	
-12	B542	. . BEARING (FAF)	10	
	22C1252-3	. . QUADRANT ASSEMBLY, Longitudinal	1	
	or			
	22C1252-1	. . QUADRANT ASSEMBLY, Longitudinal	1	
-13	MS15002-1	. . . FITTING, Lubricator	1	
-14	22C1262-1	. . . PLATE	2	
		Attaching Parts		
-15	AN174-15A	. . . BOLT	2	
-16	AN23-20A	. . . BOLT	1	
	AN364-428	. . . NUT	2	
	AN364-1032	. . . NUT	1	
	AN960D416	. . . WASHER	2	
	AN960D10	. . . WASHER	1	
	AN960D416L	. . . WASHER	2	
	AN960D10L	. . . WASHER	1	
		———*———		
-17	22C1753-18	. . . BUSHING	2	
-18	22C1265-4	. . . GUARD, Cable	1	
-19	22C1264-3	. . . PLATE	2	
		Attaching Parts		
-20	AN23-24A	. . . BOLT	2	
-21	AN23-20A	. . . BOLT	1	
	AN364-1032	. . . NUT	3	
	AN960D10	. . . WASHER	3	
	AN960D10L	. . . WASHER	3	
		———*———		
-22	22C1753-18	. . . BUSHING	2	
-23	22C1265-3	. . . GUARD, Cable	1	
-24	AN150520	. . . STUD	4	
	AN150521	. . . STUD (0.003 in. oversize)	AR	
-25	42C1622-1	. . . SPACER (Used with 22C1252-3)	2	
	22C1622-6	. . . BUSHING (Used with 22C1252-1)	2	
-26	22C1282-6	. . . SPACER (Used with 22C1252-1)	1	

Figure and Index Number	Part Number	Description 1 2 3 4 5 6 7	Units per Assembly	Usable On Code
56-27	22C1252-4	. . . QUADRANT (Used with 22C1252-3)	1	
	22C1252-2	. . . QUADRANT (Used with 22C1252-1)	1	
-28	22C1250-1	. . QUADRANT ASSEMBLY, Trim	2	
		Attaching Parts		
-29	22C1269-1	. . BOLT, Shoulder	1	
	AN364-428	. . NUT	1	
■ -30	42C1230-1	. . WASHER	1	
-31	AN960-816L	. . WASHER	1	
-32	AN960D816L	. . WASHER	1	
		———*———		
-33	AN201KP8A	. . . BEARING	2	
-34	22C1753-40	. . . SPACER	1	
-35	AN150520	. . . STUD	2	
	AN150521	. . . STUD (0.003 in. oversize)	AR	
-36	NAS75-04-022	. . . BUSHING	1	
-37	22C1264-1	. . . PLATE	2	
		Attaching Parts		
-38	AN23-16A	. . . BOLT	2	
-39	AN392-23	. . . PIN, Flat hd	1	
	AN364-1032	. . . NUT	2	
	AN960D10L	. . . WASHER	2	
	AN381-2-5	. . . PIN, Cotter	1	
	AN960D4	. . . WASHER	1	
		———*———		
-40	22C1250-2	. . . QUADRANT	1	
	22C1251-3	. . BEAM ASSEMBLY, Collective pitch walking	1	
	or			
	22C1251-1	. . BEAM ASSEMBLY, Collective pitch walking	1	
-41	NAS75-4-012	. . . BUSHING (Used with 22C1251-4)	1	
	NAS75-4-011	. . . BUSHING (Used with 22C1251-2)	1	
-41A	NAS77-4-18	. . . BUSHING (Used with 22C1251-4)	1	
	NAS75-4-010	. . . BUSHING (Used with 22C1251-2)	1	
-42	MS15002-1	. . . FITTING, Lubricator	1	
-43	42C1622-1	. . . SPACER (Used with 22C1251-3)	2	
	22C1622-6	. . . BUSHING (Used with 22C1251-1)	2	
-44	22C1282-5	. . . SPACER (Used with 22C1251-1)	1	
-45	22C1251-4	. . . BEAM, Walking (used with 22C1251-3)	1	
	22C1251-2	. . . BEAM, Walking (used with 22C1251-1)	1	
-46	42C1298-1	. . GUARD, Cable	2	
		Attaching Parts		
-47	AN23-24A	. . BOLT (Shown)	2	
	AN23-19A	. . BOLT (Opposite)	2	
	AN364-1032	. . NUT	2	
	AN960D10	. . WASHER	2	
	AN960D10L	. . WASHER	2	
		———*———		
-48	22C1284-3	. . LINK ASSEMBLY (Used with 42C1014-5)	2	
	22C1284-1	. . LINK ASSEMBLY (Used with 42C1014-2)	2	
		Attaching Parts		
-49	AN174-14A	. . BOLT	2	AU
-50	AN174-17A	. . BOLT	1	AU
	AN364-428	. . NUT	3	
-51	22C1014-3	. . WASHER	4	
-52	AN960D416L	. . WASHER	2	
-53	AN960-416L	. . WASHER	4	
		———*———		
-54	AN201KP4A	. . . BEARING	2	
-55	22C1284-4	. . . LINK (Used with 22C1284-3)	1	
	22C1284-2	. . . LINK (Used with 22C1284-1)	1	
	22C1253-3	. . BELLCRANK ASSEMBLY, Trim	1	
	or			
	22C1253-1	. . BELLCRANK ASSEMBLY, Trim	1	

Figure and Index Number	Part Number	Description 1 2 3 4 5 6 7	Units per Assembly	Usable On Code
56-56	NAS75-4-022	. . . BUSHING	1	
-57	NAS75-4-009	. . . BUSHING (Used with 22C1253-4)	1	
-57A	NAS77-4-16	. . . BUSHING (Used with 22C1253-4)	1	
	NAS75-4-007	. . . BUSHING (Used with 22C1253-2)	2	
■ -58	MS15002-1	. . . FITTING, Lubricator	1	
-59	42C1622-1	. . . SPACER (Used with 22C1251-3)	2	
	22C1622-6	. . . BUSHING (Used with 22C1253-1)	1	
-60	22C1282-4	. . . SPACER (Used with 22C1253-1)	1	
-61	22C1253-4	. . . BELLCRANK (Used with 22C1253-3)	1	
	22C1253-2	. . . BELLCRANK (Used with 22C1253-1)	1	
-62	22C1284-3	. . LINK ASSEMBLY (Used with 42C1014-5)	2	
	22C1284-1	. . LINK ASSEMBLY (Used with 42C1014-2)	2	
		Attaching Parts		
-63	AN174-13A	. . BOLT	2	AU
-64	AN174-17A	. . BOLT	1	AU
	AN364-428	. . NUT	3	
-65	AN960D416	. . WASHER	3	AU
-66	22C1014-3	. . WASHER	4	AU
-67	AN960-416L	. . WASHER	4	
-68	AN960D416L	. . WASHER	1	AU
		———*———		
	42C1256-3	. . QUADRANT ASSEMBLY, Directional control	1	AU
	or			
	42C1256-1	. . QUADRANT ASSEMBLY, Directional control	1	AU
		Attaching Parts		
-69	AN386-2-21A	. . PIN, Taper (used with 42C1256-3)	2	
	AN386-2-17A	. . PIN, Taper (used with 42C1256-1)	2	
	AN364-1032	. . NUT	2	
	AN975-3	. . WASHER	2	
		———*———		
-70	NAS75-4-022	. . . BUSHING	1	AU
-71	NAS75-4-010	. . . BUSHING	1	AU
-72	NAS75-4-014	. . . BUSHING	1	AU
-73	AN150520	. . . STUD	2	AU
	AN150521	. . . STUD (0.003 in. oversize)	AR	AU
-74	42C1256-4	. . . QUADRANT (Used with 42C1256-3)	1	AU
	42C1256-2	. . . QUADRANT (Used with 42C1256-1)	1	AU
-75	42C1257-3	. . QUADRANT ASSEMBLY, Directional lateral (used with 42C1014-5)	2	AU
	42C1257-1	. . QUADRANT ASSEMBLY, Directional lateral (used with 42C1014-2)	2	AU
		Attaching Parts		
-76	22C1269-1	. . BOLT, Shoulder	1	
	AN364-428	. . NUT	1	
-77	22C1014-3	. . WASHER	1	
	AN960-816L	. . WASHER (Between quadrant and walking beam)	1	
	AN960D816L	. . WASHER (Under bolt hd)	1	
		———*———		
-78	NAS75-4-016	. . . BUSHING	1	AU
-79	AN201KP8A	. . . BEARING	2	
-80	22C1753-40	. . . SPACER	1	
-81	AN150520	. . . STUD	2	
	AN150521	. . . STUD (0.003 in. oversize)	AR	
	42C1291-6	. . . GUARD, Cable	1	AU
	22C1753-73	. . . SPACER	4	AU
-82	42C1257-4	. . . QUADRANT (Used with 42C1257-3)	1	AU
	42C1257-2	. . . QUADRANT (Used with 42C1257-1)	1	AU
	42C1296-1	. . BEAM ASSEMBLY, Lateral walking (used with 42C1014-5)	1	AU
	42C1254-3	. . BEAM ASSEMBLY, Lateral walking (used with 42C1014-2)	1	AU
	or			
	42C1254-1	. . BEAM ASSEMBLY, Lateral walking (used with 42C1014-2)	1	AU
-83	NAS75-4-013	. . . BUSHING (Used with 42C1296-1 and 42C1254-3)	1	
	NAS75-4-010	. . . BUSHING (Used with 42C1254-1)	1	
-83A	NAS77-4-18	. . . BUSHING (Used with 42C1296-1 and 42C1254-3)	1	
	NAS75-4-011	. . . BUSHING (Used with 42C1254-1)	1	

Figure and Index Number	Part Number	Description 1 2 3 4 5 6 7	Units per Assembly	Usable On Code
■ 56-84	MS15002-1	. . . FITTING, Lubricator	1	
-85	AN150520	. . . STUD	2	AU
	AN150521	. . . STUD (0.003 in. oversize)	AR	AU
	42C1291-2	. . . PLATE, Cable guard	2	AU
■	42C1291-7	. . . GUARD, Cable	1	AU
	22C1753-73	. . . SPACER	4	AU
-86	42C1622-3	. . . SPACER (Used with 42C1296-1 and 42C1254-3)	2	
	22C1622-6	. . . BUSHING (Used with 42C1254-1)	2	
-87	22C1282-3	. . . SPACER (Used with 42C1254-1)	1	
-88	42C1296-2	. . . BEAM, Walking (used with 42C1296-1)	1	
	42C1254-4	. . . BEAM, Walking (used with 42C1254-3)	1	
	42C1254-2	. . . BEAM, Walking (used with 42C1254-1)	1	
-89	42C1292-1	. . GUARD, Cable (shown)	1	AU
	42C1292-2	. . GUARD, Cable (opposite)	1	AU
		Attaching Parts		
-90	AN23-19A	. . BOLT	2	
	AN364-1032	. . NUT	2	
	AN960D10	. . WASHER	2	
	AN960D10L	. . WASHER	2	
		——————		
	22C1260-5	. . BELLCRANK ASSEMBLY, Directional	1	
	or			
	22C1260-3	. . BELLCRANK ASSEMBLY, Directional	1	
	or			
	22C1260-1	. . BELLCRANK ASSEMBLY, Directional	1	
-91	NAS75-4-011	. . . BUSHING (Used with 22C1260-3 and -5)	1	
	NAS75-4-010	. . . BUSHING (Used with 22C1260-1)	1	
-92	NAS77-4-19	. . . BUSHING (Used with 22C1260-3 and -5)	1	
	NAS75-4-011	. . . BUSHING (Used with 22C1260-1)	1	
-92A	NAS75-4-012	. . . BUSHING (Used with 22C1260-5)	2	
	NAS75-4-011	. . . BUSHING (Used with 22C1260-3)	2	
	NAS75-4-010	. . . BUSHING (Used with 22C1260-1)	2	
-93	NAS77-4-21	. . . BUSHING (Used with 22C1260-3 and -5)	2	
	NAS75-4-011	. . . BUSHING (Used with 22C1260-1)	2	
■ -94	MS15002-1	. . . FITTING, Lubricator	1	
-95	42C1622-1	. . . SPACER (Used with 22C1260-3 and -5)	2	
	22C1622-6	. . . BUSHING (Used with 22C1260-1)	2	
-96	22C1282-2	. . . SPACER (Used with 22C1260-1)	1	
-97	22C1260-6	. . . BELLCRANK (Used with 22C1260-5)	1	
	22C1260-4	. . . BELLCRANK (Used with 22C1260-3)	1	
	22C1260-2	. . . BELLCRANK (Used with 22C1260-1)	1	
-98	22C1282-1	. . SPACER	1	
-99	22C1283-2	. . SHAFT, Lower differential control unit (used with 42C1014-5)	1	
	22C1283-1	. . SHAFT, Lower differential control unit (used with 42C1014-2)	1	
-100	22C1258-1	. . HOUSING, Upper bearing	1	
-101	AN202KP21B	. . BEARING	1	
-102	22C1263-1	. . PLATE	2	
	42C1014-4	LOWER DIFFERENTIAL CONTROL ASSEMBLY, See fig. 56A (special spare parts assembly)	Ref	
	42C1014-100	LOWER DIFFERENTIAL CONTROL ASSEMBLY, See fig. 56A (special spare parts assembly)	Ref	

Controls

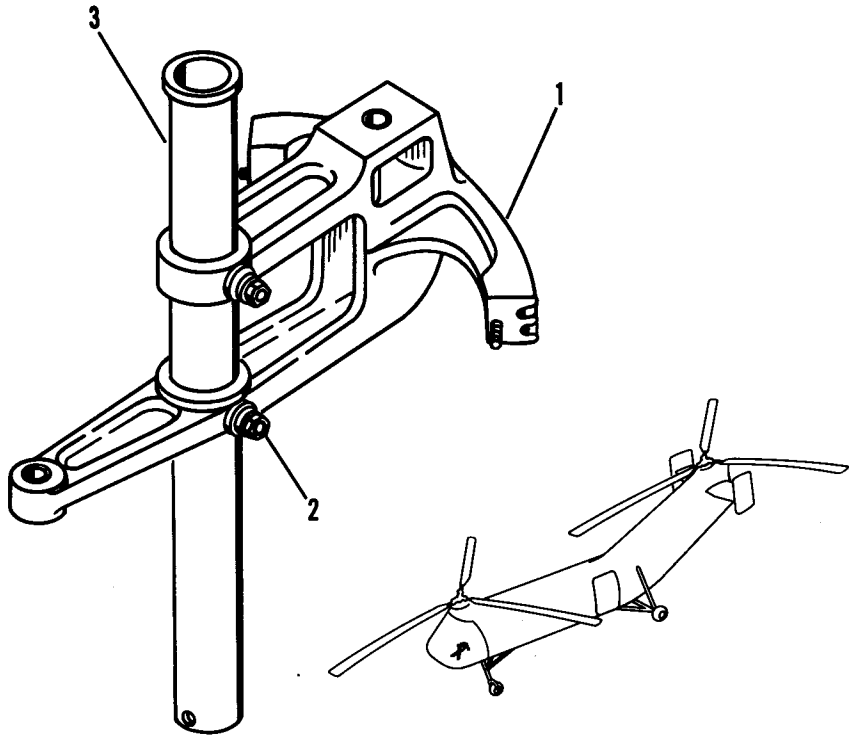

Figure 56A. Lower Differential Control (Special Spare Parts Assembly)

Figure and Index Number	Part Number	Description 1 2 3 4 5 6 7	Units per Assembly	Usable On Code
56A-	42C1014-100	LOWER DIFFERENTIAL CONTROL ASSEMBLY (Special spare parts assembly)	1	C
	or 42C1014-4	LOWER DIFFERENTIAL CONTROL ASSEMBLY (Special spare parts assembly)	1	C
-1	42C1256-3	. QUADRANT ASSEMBLY (Used with 42C1014-100)	1	C
	or 42C1256-1	. QUADRANT ASSEMBLY (Used with 22C1014-4)	1	C
		Attaching Parts		
-2	AN386-2-21A	. PIN, Taper (used with 42C1256-3)	2	C
	AN386-2-17A	. PIN, Taper (used with 42C1256-1)	2	C
	AN364-1032	. NUT	2	C
	AN975-3	. WASHER	2	C
		——————		
-3	22C1283-2	. SHAFT (Used with 42C1014-100)	1	C
	22C1283-1	. SHAFT (Used with 22C1014-4)	1	C

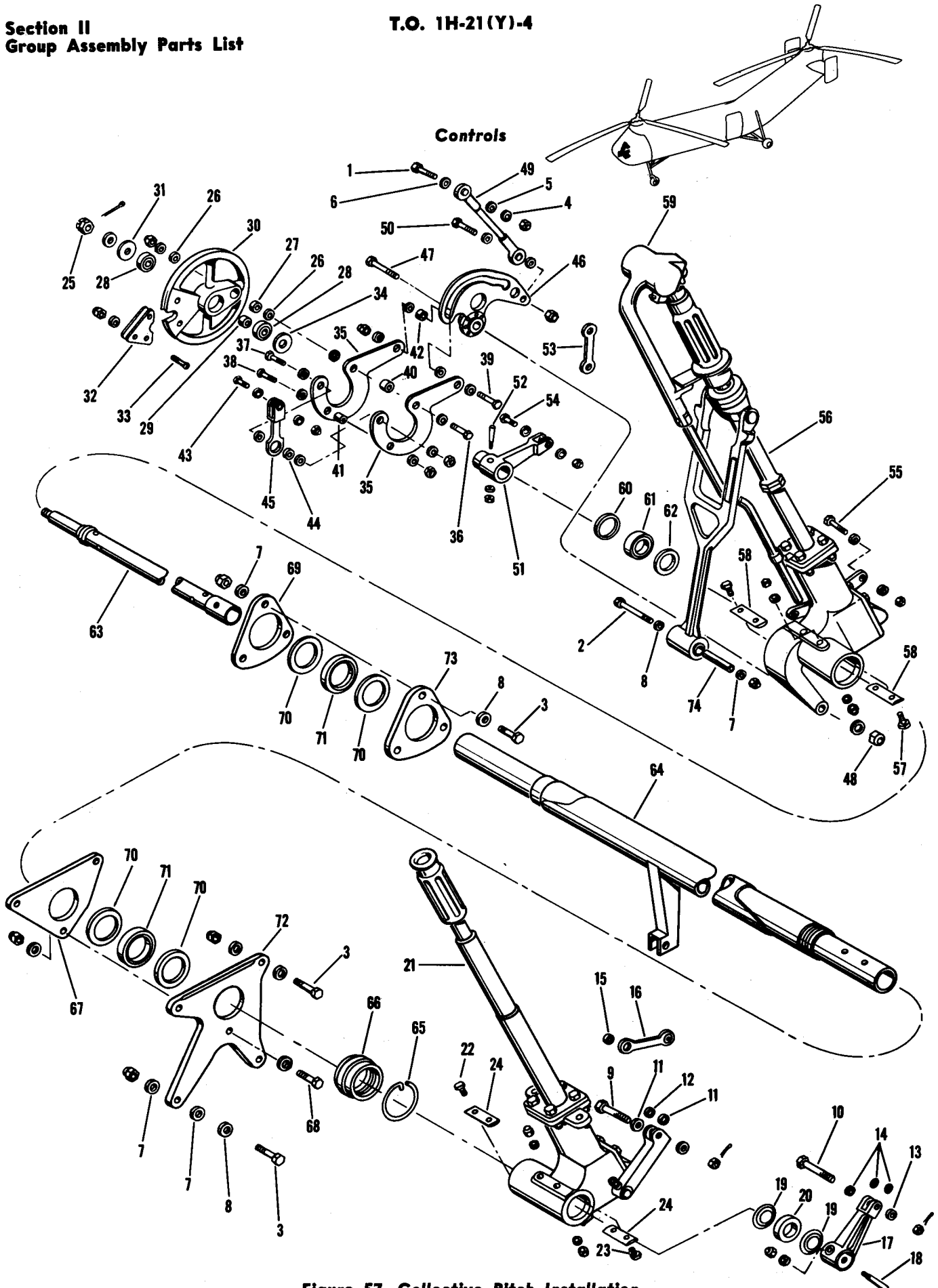

Figure 57. Collective Pitch Installation

Figure and Index Number	Part Number	Description 1 2 3 4 5 6 7	Units per Assembly	Usable On Code
57-	22C1015-1	LEVER INSTALLATION, Collective pitch	1	AE
	22C1015-6	LEVER INSTALLATION, Collective pitch	1	AF
	22C1015-8	LEVER INSTALLATION, Collective pitch	1	T
	22C1015-10	LEVER INSTALLATION, Collective pitch	1	W
	22C1015-12	LEVER INSTALLATION, Collective pitch	1	CI
	22C1015-14	LEVER INSTALLATION, Collective pitch	1	BQ
	42C1015-7	LEVER INSTALLATION, Collective pitch	1	CJ
	42C1015-5	LEVER INSTALLATION, Collective pitch	1	BV
	22C1015-2	. LEVER ASSEMBLY, Collective pitch	1	AE
	22C1015-5	. LEVER ASSEMBLY, Collective pitch	1	AF
	22C1015-7	. LEVER ASSEMBLY, Collective pitch	1	T
	22C1015-9	. LEVER ASSEMBLY, Collective pitch	1	W
	22C1015-11	. LEVER ASSEMBLY, Collective pitch	1	CI
	22C1015-13	. LEVER ASSEMBLY, Collective pitch	1	BQ
	42C1015-8	. LEVER ASSEMBLY, Collective pitch	1	CJ
	42C1015-6	. LEVER ASSEMBLY, Collective pitch	1	BV
		Attaching Parts		
-1	AN173-10A	. BOLT	1	
-2	AN174-25	. BOLT	1	
-3	AN4-10A	. BOLT	7	
	AN381-2-12	. PIN, Cotter	1	
	AN365-1032	. NUT	1	
	AN320-4	. NUT	1	
	AN365-428	. NUT	7	
-4	AN960D10	. WASHER	1	
-5	AN960D10L	. WASHER	1	
-6	AN960-10	. WASHER	1	
-7	AN960D416	. WASHER	8	
-8	AN960D416L	. WASHER	8	
		———*———		
	17C1358-1	. . LINK ASSEMBLY, Throttle bellcrank	1	
		Attaching Parts		
-9	AN173-7	. . BOLT	1	
-10	AN173-10	. . BOLT	1	
	AN381-2-10	. . PIN, Cotter	2	
	AN310-3	. . NUT	2	
-11	AN960-10	. . WASHER	2	
-12	AN960-10L	. . WASHER	2	
-13	AN960D10L	. . WASHER	1	
-14	AN960D10	. . WASHER	3	
		———*———		
-15	AN200KS3L	. . . BEARING	2	
-16	17C1358-2	. . . LINK	1	
-17	17C1356-2	. . BELLCRANK, Co-pilot's throttle	1	
		Attaching Parts		
-18	AN386-1-12A	. . PIN, Taper	1	
	AN364-1032	. . NUT	1	
	AN975-3	. . WASHER	1	
		———*———		
-19	3C2138-9	. . RETAINER, Bearing grease	2	
-20	B541	. . BEARING (FAF)	1	
-21	22C1300-2	. . LEVER, Co-pilot's collective pitch, see fig. 59	Ref	
		Attaching Parts		
-22	22C1035-1	. . BOLT	2	
-23	22C1035-2	. . BOLT	2	
	AN364-524	. . NUT	4	
	AN960D516	. . WASHER	4	
-24	17C1357-1	. . SPACER (Under bolt hd)	2	
		———*———		
	22C2103-1	. . QUADRANT ASSEMBLY, Collective pitch throttle	1	
		Attaching Parts		
-25	AN320D8	. . NUT	1	

Figure and Index Number	Part Number	1 2 3 4 5 6 7 Description	Units per Assembly	Usable On Code
57-	AN381-2-14	. . PIN, Cotter	1	
	AN960D816	. . WASHER	1	
		———*———		
-26	AN201KP4A	. . . BEARING	2	
-27	22C1753-12	. . . SPACER	1	
-28	B539	. . . BEARING (FAF)	2	
-29	22C1753-13	. . . SPACER	1	
-30	22C2103-2	. . . QUADRANT	1	
-31	22C2108-2	. . GUARD, Bearing grease	1	
-32	22C2112-1	. . RETAINER, Throttle cable	1	J
	42C2113-1	. . RETAINER, Throttle cable	1	AU
	42C2113-2	. . RETAINER, Throttle cable	1	AU
		Attaching Parts		
-33	AN509-10R11	. . SCREW	2	J
	AN509-10R15	. . SCREW	2	AU
	AN395-19	. . PIN, Flat hd	1	AU
	AN364-1032	. . NUT	2	
	AN381-3-8	. . PIN, Cotter	1	AU
	AN960D10L	. . WASHER	2	J
	AN960D10	. . WASHER	2	AU
	AN960D516L	. . WASHER	2	AU
		———*———		
-34	3C2138-2	. . RETAINER, Bearing grease	1	
-35	22C2105-1	. . YOKE, Collective pitch throttle	2	
		Attaching Parts		
-36	AN174-15A	. . BOLT	1	
-37	AN173-7A	. . BOLT	1	
-38	AN23-13A	. . BOLT	1	
-39	22C2111-1	. . BOLT	1	
	AN365-428	. . NUT	1	
	AN365-1032	. . NUT	2	
	AN960-416L	. . WASHER (Under nut)	1	
	AN960D416L	. . WASHER (Each side of yoke)	2	
	AN960D10	. . WASHER (Each side of K3L3 bearing and 22C2109-1 link)	7	
	AN960D10L	. . WASHER (Under bolt hd)	3	
		———*———		
-40	22C1753-31	. . SPACER	1	
-41	22C1753-50	. . SPACER	1	
-42	K3L3	. . BEARING, Track roller (FAF)	1	
	22C2109-1	. . LINK ASSEMBLY	1	
		Attaching Parts		
-43	AN173-7A	. . BOLT	1	AE
	22C2111-1	. . BOLT	1	F,B
	AN365-1032	. . NUT	1	
	AN960D10	. . WASHER	1	
	AN960D10L	. . WASHER	1	
		———*———		
-44	AN200KS3L	. . . BEARING	1	
	NAS75-3-003	. . . BUSHING	2	
-45	22C2109-2	. . . LINK	1	
-46	22C2104-1	. . CAM ASSEMBLY	1	AE
	22C2115-1	. . CAM ASSEMBLY	1	AF
	22C2116-1	. . CAM ASSEMBLY	1	T,B
		Attaching Parts		
-47	AN174-21A	. . BOLT	1	
-48	AN365-428	. . NUT	1	
	AN960D416	. . WASHER	1	
		———*———		
	AN218P4	. . . BEARING	1	
-49	17C2504-3	. . ROD ASSEMBLY, Throttle push-pull	1	
		Attaching Parts		
-50	AN173-10A	. . BOLT	1	

Figure and Index Number	Part Number	Description 1 2 3 4 5 6 7	Units per Assembly	Usable On Code
57-	AN365-1032	. . NUT	1	
	AN960-10	. . WASHER (Between cam and rod)	1	
	AN960-10L	. . WASHER (Under bolt hd)	1	
		———*———		
	REB3N	. . . END, Rod (FAF)	2	
	AN316-4R	. . . NUT	1	
	17C2504-5	. . . ROD	1	
-51	22C2107-3	. . CRANK ASSEMBLY, Collective pitch interconnect throttle	1	
	or			
	22C2107-1	. . CRANK ASSEMBLY, Collective pitch interconnect throttle	1	
		Attaching Parts		
-52	AN386-1-10A	. . PIN, Taper	1	
	AN364-1032	. . NUT	1	
	AN975-3	. . WASHER	1	
		———*———		
	NAS75-3-004	. . . BUSHING (Used with 22C2107-4)	1	
	NAS77-3-8	. . . BUSHING (Used with 22C2107-4)	1	
	NAS75-3-004	. . . BUSHING (Used with 22C2107-2)	2	
	22C2107-4	. . . LEVER (Used with 22C2107-3)	1	
	22C2107-2	. . . LEVER (Used with 22C2107-1)	1	
-53	17C1358-4	. . LINK ASSEMBLY	1	
		Attaching Parts		
-54	22C2111-1	. . BOLT	1	
-55	AN173-12A	. . BOLT	1	
	AN365-1032	. . NUT	2	
	AN960-10	. . WASHER (Under nut)	1	
	AN960-10L	. . WASHER (Under nut)	1	
	AN960D10L	. . WASHER (Under bolt hd)	2	
		———*———		
	AN200KS3L	. . . BEARING	2	
	17C1358-6	. . . LINK	1	
-56	22C1300	. . LEVER ASSEMBLY, Pilot's collective pitch, see fig. 58*	Ref	
		Attaching Parts		
-57	22C1035-2	. . BOLT	4	
	AN364-524	. . NUT	4	
	AN960D516	. . WASHER	4	
-58	17C1357-1	. . SPACER (Under bolt hd)	2	
		———*———		
-59	22C1325-2	. . SUPPORT ASSEMBLY, Pilot's collective pitch lever switch, see fig. 58	Ref	
-60	22C2108-1	. . GUARD, Interconnecting throttle shaft bearing grease	1	
-61	B541	. . BEARING (FAF)	1	
-62	3C2138-9	. . RETAINER, Grease	1	
-63	22C1303-1	. . TUBE ASSEMBLY, Throttle torque	1	
-64	17C1350-8	. . TUBE ASSEMBLY, Collective pitch torque	1	A
	42C1335-1	. . TUBE ASSEMBLY, Collective pitch torque	1	B
		Attaching Parts		
-65	AN996-32	. . RING, Lock	1	
-66	17C1359-1	. . NUT, Lock	1	
		———*———		
-67	22C1318-1	. . RETAINER	1	
		Attaching Parts		
-68	AN4-10A	. . BOLT	1	
	AN365-428	. . NUT	1	
	AN960D416	. . WASHER	2	
		———*———		
-69	17C1355-4	. . RETAINER	1	
-70	3C2138-8	. . RETAINER, Grease	4	
-71	B544	. . BEARING (FAF)	2	
-72	22C1305-1	. . HOUSING, Bearing	1	
-73	17C1355-3	. . HOUSING, Bearing	1	
-74	14C2115-44	. BUSHING	1	

*For proper usable on codes and complete breakdown, see figure number as indicated.

Controls

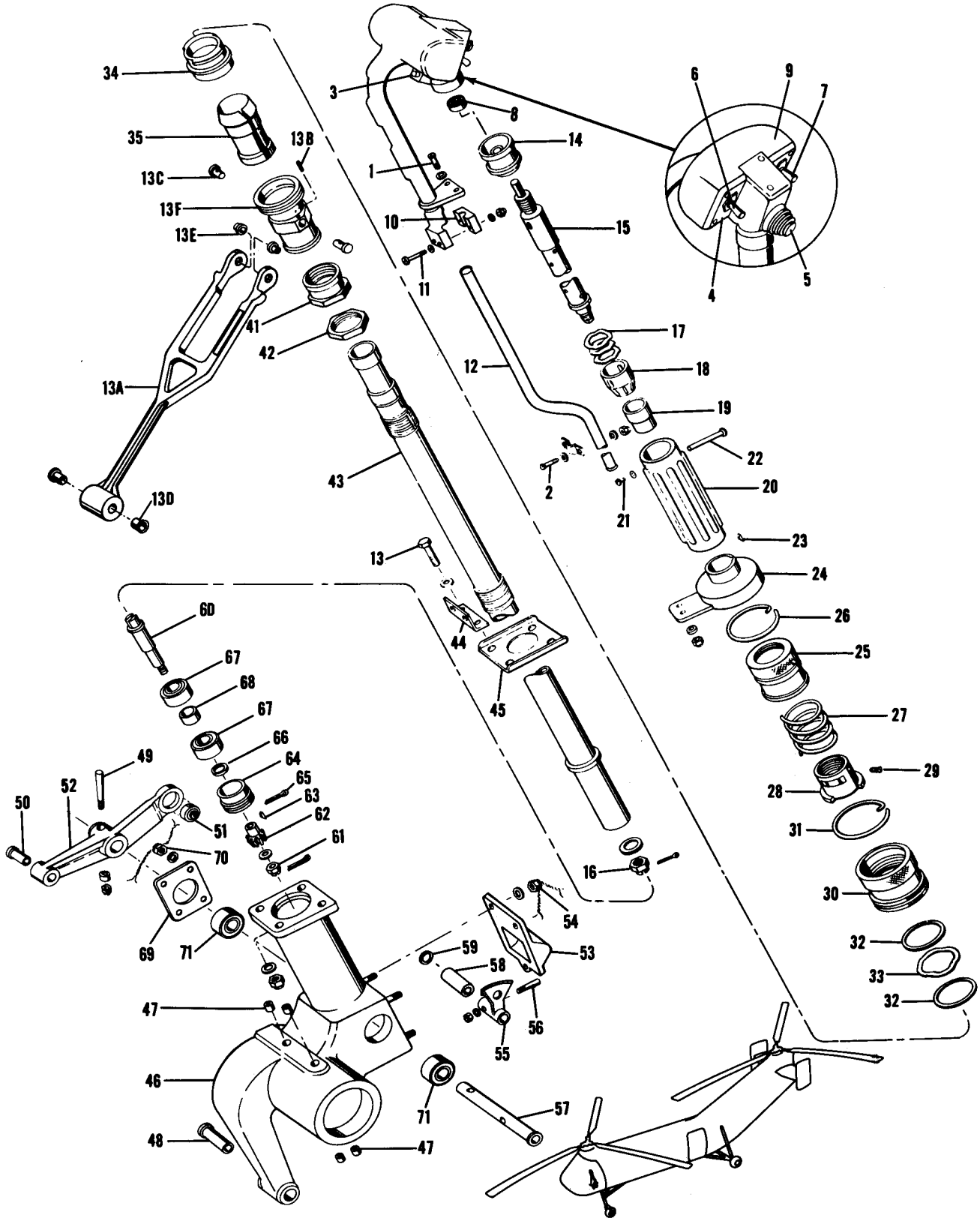

Figure 58. Pilot's Collective Pitch Lever

Figure and Index Number	Part Number	Description 1 2 3 4 5 6 7	Units per Assembly	Usable On Code
58-	22C1325-2	SUPPORT ASSEMBLY, Pilot's collective pitch lever switch	1	
		Attaching Parts		
-1	AN23-11A	BOLT	2	
-2	AN515-6R6	SCREW	2	
	AN365-1032	NUT	2	
	AN365-632	NUT	2	
	AN960D10	WASHER	2	
	AN960D6	WASHER	4	
	AN960-10L	WASHER	2	
		———*———		
	AF750-8	. CLIP	1	
-3	C1006	. SWITCH, Junior (RHS)	1	
-4	22C1331-2	. CAP, Switch housing	1	
-5	52A4160	. BUTTON, Selector switch (USAF dwg No.)	1	
	or			
	46A5122	. BUTTON, Selector switch (USAF dwg No.)	1	
	X646A	. SWITCH ASSEMBLY, Selector control (GN)	1	
	or			
	X646	. SWITCH ASSEMBLY, Selector control (GN)	1	
-6	T1002	. SWITCH, Toggle (RHS)	1	
-7	8802K10	. SWITCH, Toggle (CUT)	1	
	or			
	ST42E	. SWITCH. Toggle (KKE)	1	
-8	AN201KP4A	. BEARING	1	
-9	22C1320-1	. HOUSING ASSEMBLY, Switch	1	
	22C1320-2	. . HOUSING	1	
	RL16SB-5	. . RING, Lock (ROSN)	4	
	RD102SB-4L	. . INSERT (ROSN)	4	
-10	22C1320-3	. . BLOCK	1	
		Attaching Parts		
-11	AN515-6-22	. . SCREW	2	
	AN365-632	. . NUT	2	
	AN960D6L	. . WASHER	4	
		———*———		
-12	22C1319-1	. CONDUIT	1	
	22C1300-1	LEVER ASSEMBLY, Pilot's collective pitch	1	AE
	22C1300-10	LEVER ASSEMBLY, Pilot's collective pitch	1	AF
	22C1300-8	LEVER ASSEMBLY, Pilot's collective pitch	1	AT,AP
	22C1300-12	LEVER ASSEMBLY, Pilot's collective pitch	1	X,BV
	22C1300-3	. LEVER ASSEMBLY	1	AE
	22C1300-9	. LEVER ASSEMBLY	1	H,AP
	22C1300-11	. LEVER ASSEMBLY	1	X,BV
		Attaching Parts		
-13	AN4-10A	. BOLT	4	
	AN365-428	. NUT	4	
	AN960D416	. WASHER	4	
	AN960-416L	. WASHER	2	
	AN960D416L	. WASHER (Under bolt hds thru clip)	2	
		———*———		
	22C1300-15	. . LEVER SUBASSEMBLY	1	
	or			
	22C1300-13	. . LEVER SUBASSEMBLY	1	
-13A	42C1352-1	. . . YOKE ASSEMBLY, Collective pitch friction slide (used with 22C1300-15)	1	
	22C1324-1	. . . YOKE ASSEMBLY, Collective pitch friction slide (used with 22C1300-13)	1	
		Attaching Parts		
-13B	17C1311-1	. . . PIN, Friction slide	2	
-13C	42C1353-1	. . . TRUNNION, Friction slide (used with 42C1352-1)	2	
	17C1347-1	. . . TRUNNION, Friction slide (used with 22C1324-1)	2	
		———*———		
-13D	NAS77-6-44	. . . . BUSHING (Used with 42C1352-1)	2	

Figure and Index Number	Part Number	1 2 3 4 5 6 7 Description	Units per Assembly	Usable On Code
58-13E	NAS77-5-20	. . . . BUSHING (Used with 42C1352-1)	2	
	17C1348-1	. . . . BUSHING (Used with 22C1324-1)	2	
-13F	42C1356-6	. . . SLEEVE, Collective pitch friction slide	1	
	or			
	42C1356-4	. . . SLEEVE, Collective pitch friction slide	1	
	or			
	17C1330-2	. . . SLEEVE, Collective pitch friction slide	1	
-14	17C1341-3	. . KNOB, Throttle friction lock	1	J,EP
	or			
	17C1341-2	. . KNOB, Throttle friction lock	1	J,EP
	17C1341-4	. . KNOB, Throttle friction lock	1	EQ
	5108-56-MF	. . RING, Retainer (WKI) (used with 17C1341-4)	1	EQ
-15	22C1310-1	. . TUBE ASSEMBLY, Pilot's throttle torque	1	G,AP
	22C1310-7	. . TUBE ASSEMBLY, Pilot's throttle torque	1	J,EP
	22C1310-8	. . TUBE ASSEMBLY, Pilot's throttle torque	1	EQ
		Attaching Parts		
-16	AN320-7	. . NUT	1	
	AN381-3-16	. . PIN, Cotter	1	
	AN960-716	. . WASHER	1	
		———*———		
-17	17C1334-2	. . SPRING, Friction lock and throttle washer	3	
-18	17C1340-2	. . CONE, Throttle friction lock	1	
-19	17C1308-1	. . CONE, Collective pitch lever	1	G,AP
	17C1308-2	. . CONE, Collective pitch lever	1	X,BV
-20	22C1323-1	. . GRIP ASSEMBLY, Pilot's collective pitch lever	1	
		Attaching Parts		
-21	AN526-632-6	. . SCREW	1	
-22	17C1366-1	. . BOLT	1	
	AN936A6	. . WASHER, Lock	1	
		———*———		
	17C1316-1	. . . SPACER	1	
	17C1315-1	. . . BEARING	1	
	22C1322-1	. . . GRIP	1	
-23	206	. . KEY, Woodruff 1/16 x 5/16	1	
-24	22C1321-7	. . SUPPORT ASSEMBLY, Collective pitch	1	
	or			
	22C1321-5	. . SUPPORT ASSEMBLY, Collective pitch	1	
	or			
	22C1321-1	. . SUPPORT ASSEMBLY, Collective pitch	1	
-25	17C1335-1	. . LATCH, Collective pitch down lock	1	
		Attaching Parts		
-26	17C1338-2	. . RING, Lock	1	
		———*———		
-27	17C1336-1	. . SPRING, Down lock compression	1	
-28	42C1358-1	. . STOP, Collective pitch lever lower limit	1	
	or			
	17C1337-1	. . STOP, Collective pitch lever lower limit	1	
		Attaching Parts		
-29	AN565A8-3	. . SCREW, Set	1	
		———*———		
-30	17C1332-1	. . NUT, Collective pitch friction lock	1	
		Attaching Parts		
-31	17C1338-1	. . RING, Lock	1	
		———*———		
-32	22C1314-1	. . WASHER, Collective pitch friction lock	2	
-33	17C1334-1	. . SPRING, Collective pitch friction lock and throttle washer	1	
-34	22C1312-4	. . CONE ASSEMBLY, Collective pitch sliding	1	
	or			
	22C1312-1	. . CONE ASSEMBLY, Collective pitch sliding	1	
-35	17C1331-2	. . SLEEVE, Collective pitch friction lock	1	

Figure and Index Number	Part Number	1 2 3 4 5 6 7 Description	Units per Assembly	Usable On Code
58-36 thru -40	Deleted			
-41	17C1329-1	. . STOP, Collective pitch lever upper limit	1	AE
	17C1329-2	. . STOP, Collective pitch lever upper limit	1	F,B
-42	17C1328-1	. . NUT, Collective pitch lever check	1	
-43	22C1306-1	. . LEVER, Pilot's collective pitch	1	
-44	22C1328-1	. CLIP, Collective pitch searchlight conduit	1	
-45	42C1360-2	. RETAINER, Pilot's collective pitch lever	1	
	or			
	42C1360-1	. RETAINER, Pilot's collective pitch lever	1	
	or			
	17C1360-1	. RETAINER, Pilot's collective pitch lever	1	
	22C1300-5	. HOUSING ASSEMBLY, Pilot's collective pitch lever	1	S
	22C1300-7	. HOUSING ASSEMBLY, Pilot's collective pitch lever	1	T,B
-46	22C1301-1	. . HOUSING ASSEMBLY	1	
-47	14C2115-15	. . . BUSHING	4	
-48	NAS77-4-97	. . . BUSHING	1	
	18C1385-1	. . . SLEEVE (Shrunk inside housing)	1	
	18C1391-1	. . . STUD	4	
	NAS183-3-5	. . . STUD	3	
	22C2106-1	. . BELLCRANK ASSEMBLY, Pilot's collective pitch throttle	1	S
	22C2114-1	. . BELLCRANK ASSEMBLY, Pilot's collective pitch throttle	1	T,B
		Attaching Parts		
-49	AN386-1-7A	. . PIN, Taper	1	S
	AN386-1-8A	. . PIN, Taper	1	T,B
	AN364-1032	. . NUT	1	
	AN975-3	. . WASHER	1	
		———*———		
-50	NAS77-3-55	. . . BUSHING	1	
-51	AN200KS3L	. . . BEARING	1	
-52	22C2106-2	. . . BELLCRANK	1	S
	22C2114-2	. . . BELLCRANK	1	T,B
-53	17C1312-3	. . CAP, Throttle control housing	1	
		Attaching Parts		
-54	AN320-3	. . NUT	3	
	AN960D10	. . WASHER	3	
	AN995N40	. . WIRE, Lock	AR	
		———*———		
-55	17C1324-2	. . GEAR, Collective pitch throttle bevel	1	
		Attaching Parts		
-56	42C1367-1	. . PIN, Taper	1	
	AN364-1032	. . NUT	1	
	AN975-3	. . WASHER	1	
		———*———		
-57	22C1311-1	. . SHAFT, Collective pitch throttle gear	1	
-58	22C1753-76	. . SPACER	1	
-59	17C1320-1	. . SHIM	AR	
-60	18C1388-1	. . SHAFT, Collective pitch throttle	1	
		Attaching Parts		
-61	AN310-4	. . NUT	1	
	AN381-2-12	. . PIN, Cotter	1	
	AN960-416	. . WASHER	1	
		———*———		
-62	17C1323-1	. . GEAR, Collective pitch throttle pinion	1	
-63	AN280-H304	. . KEY, Woodruff	1	
-64	18C1386-1	. . NUT, Collective pitch bearing retainer	1	
-65	AN381-2-5	. . PIN, Cotter	1	
-66	17C1320-2	. . SHIM	AR	
-67	AN201KP8A	. . BEARING	2	
-68	18C1392-1	. . SPACER, Collective pitch throttle shaft bearing	1	

Figure and Index Number	Part Number	1 2 3 4 5 6 7 Description	Units per Assembly	Usable On Code
58-69	17C1325-2	. . RETAINER, Throttle housing bearing	1	
		Attaching Parts		
-70	AN320-2	. . NUT	4	
	AN960D8L	. . WASHER	8	
	AN995N40	. . WIRE, Lock	AR	
		**		
-71	AN201KP8A	. . BEARING	2	

Controls

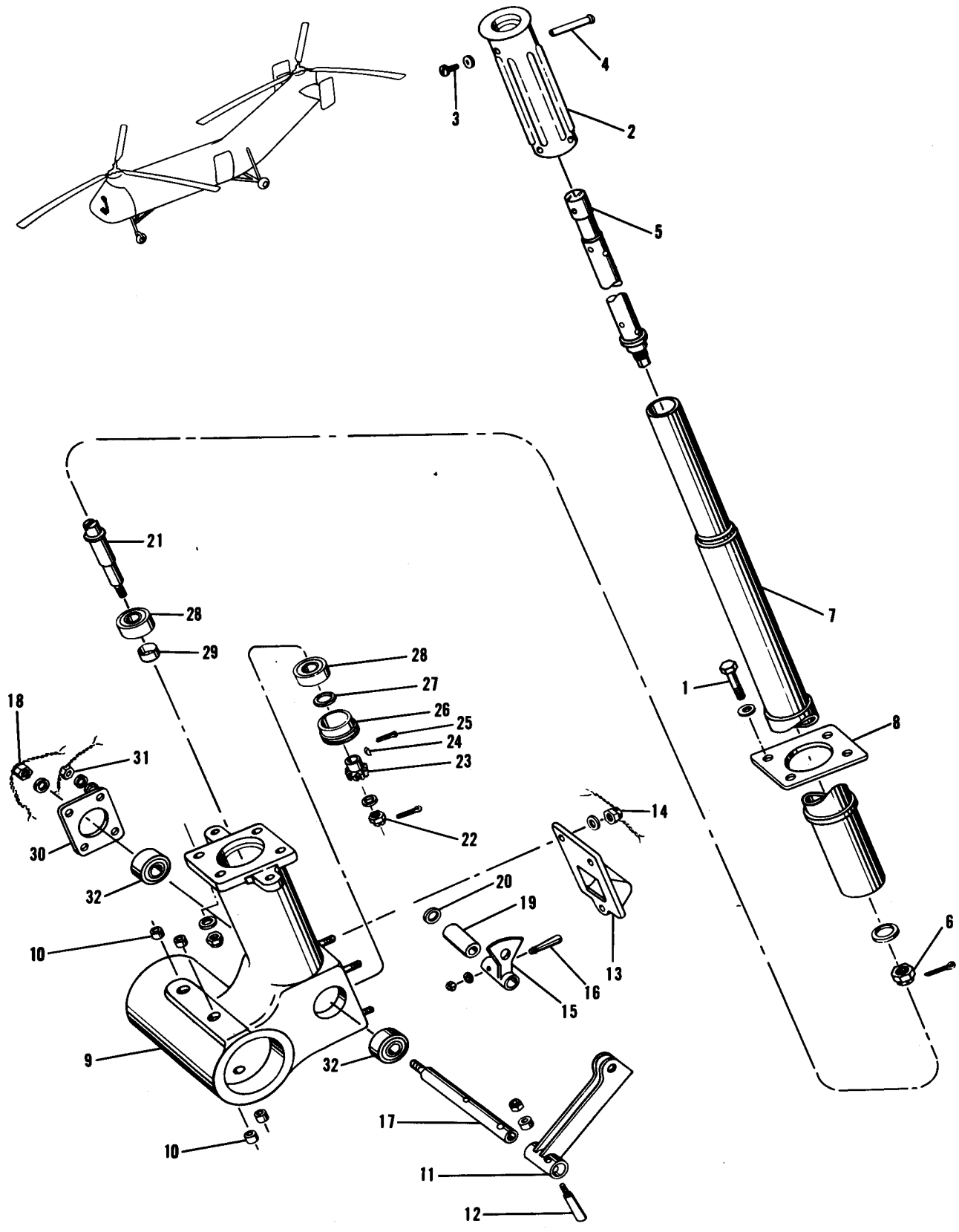

Figure 59. Co-Pilot's Collective Pitch Lever

Figure and Index Number	Part Number	Description 1 2 3 4 5 6 7	Units per Assembly	Usable On Code
59-	22C1300-2	LEVER ASSEMBLY, Co-pilot's collective pitch	1	
	22C1300-4	. LEVER ASSEMBLY	1	
		Attaching Parts		
-1	AN4-10A	. BOLT	4	
	AN365-428	. NUT	4	
	AN960D416	. WASHER	4	
	AN960D416L	. WASHER	4	
		———*———		
-2	17C1313-2	. . GRIP ASSEMBLY, Co-pilot's collective pitch lever	1	
		Attaching Parts		
-3	AN526-632-6	. . SCREW	1	
-4	17C1366-1	. . BOLT	1	
	AN936A6	. . WASHER, Lock	1	
		———*———		
-5	22C1310-2	. . TUBE ASSEMBLY, Co-pilot's throttle torque	1	
		Attaching Parts		
-6	AN320-7	. . NUT	1	
	AN381-3-16	. . PIN, Cotter	1	
	AN960-716	. . WASHER	1	
		———*———		
-7	18C1353-5	. . LEVER, Co-pilot's collective pitch	1	
-8	17C1349-1	. . RETAINER, Co-pilot's collective pitch lever	1	
	22C1300-6	. HOUSING ASSEMBLY, Co-pilot's collective pitch lever	1	
-9	22C1301-2	. . HOUSING ASSEMBLY	1	
-10	14C2115-15	. . . BUSHING	4	
-11	17C1326-2	. . BELLCRANK ASSEMBLY, Co-pilot's collective pitch throttle	1	
		Attaching Parts		
-12	AN386-1-6A	. . PIN, Taper	1	
	AN364-1032	. . NUT	1	
	AN975-3	. . WASHER	1	
		———*———		
-13	17C1312-3	. . CAP, Throttle control housing	1	
		Attaching Parts		
-14	AN320-3	. . NUT	1	
	AN960D10	. . WASHER	1	
	AN995N40	. . WIRE, Lock	AR	
		———*———		
-15	17C1324-2	. . GEAR, Collective pitch throttle bevel	1	
		Attaching Parts		
-16	42C1367-1	. . PIN, Taper	1	
	AN364-1032	. . NUT	1	
	AN975-3	. . WASHER	1	
		———*———		
-17	17C1322-2	. . SHAFT, Collective pitch throttle	1	
		Attaching Parts		
-18	AN320-5	. . NUT	1	
	AN960-516	. . WASHER	1	
	AN995N40	. . WIRE, Lock	AR	
		———*———		
-19	22C1753-76	. . SPACER	1	
-20	17C1320-1	. . SHIM	AR	
-21	18C1388-1	. . SHAFT, Collective pitch throttle	1	
		Attaching Parts		
-22	AN310-4	. . NUT	1	
	AN381-2-12	. . PIN, Cotter	1	
	AN960-416	. . WASHER	1	
		———*———		
-23	17C1323-1	. . GEAR, Collective pitch throttle pinion	1	
-24	AN280H304	. . KEY, Woodruff	1	
-25	AN381-2-5	. . PIN, Cotter	1	
-26	18C1386-1	. . NUT, Collective pitch bearing retainer	1	
-27	17C1320-2	. . SHIM	AR	

Figure and Index Number	Part Number	1 2 3 4 5 6 7 Description	Units per Assembly	Usable On Code
59-28	AN201KP8A	. . BEARING	2	
-29	18C1392-1	. . SPACER, Collective pitch throttle shaft bearing	1	
-30	17C1325-2	. . RETAINER, Throttle housing bearing	1	
		Attaching Parts		
-31	AN320-2	. . NUT	4	
	AN960D8L	. . WASHER	8	
	AN995N40	. . WIRE, Lock	AR	
		———*———		
-32	AN201KP8A	. . BEARING	2	

Controls

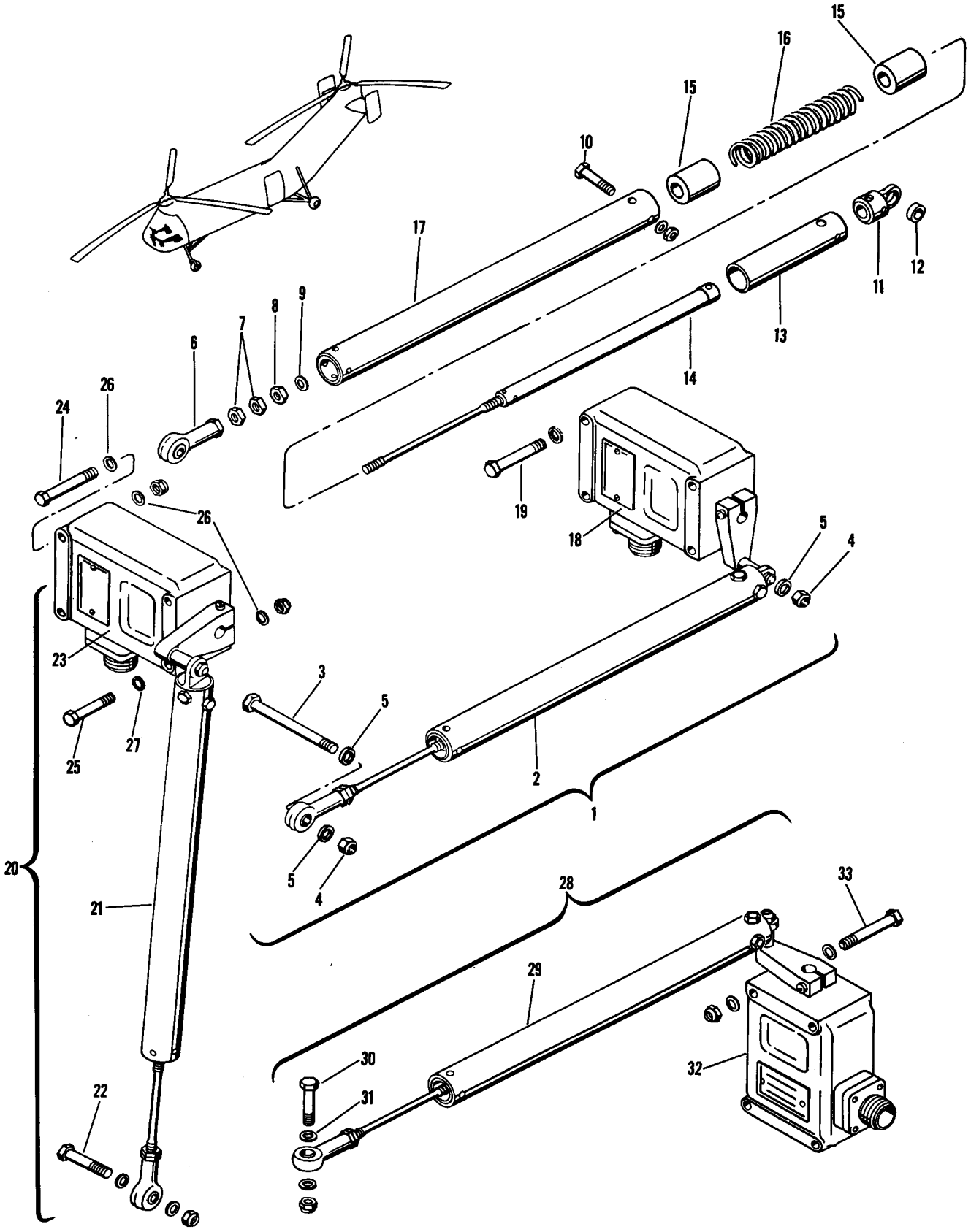

Figure 60. Centering Springs

Figure and Index Number	Part Number	Description 1 2 3 4 5 6 7	Units per Assembly	Usable On Code
60-	22C1018-5	SPRING INSTALLATION, Longitudinal centering	1	J,CK
	22C1018-3	SPRING INSTALLATION, Longitudinal centering	1	CL,D
-1	22C1018-6	. SPRING ASSEMBLY, Longitudinal centering	1	J,CK
	22C1018-4	. SPRING ASSEMBLY, Longitudinal centering	1	CL,D
-2	22C1401-4	. . ROD ASSEMBLY, Longitudinal centering spring	1	
		Attaching Parts		
-3	AN3-32A	. . BOLT	1	
-4	AN365-1032	. . NUT	2	
-5	AN960D10	. . WASHER	3	
		———*———		
-6	REB3N2	. . . BEARING, Rod end (FAF)	1	
-7	AN316-5R	. . . NUT, Check	2	
-8	AN315-5R	. . . NUT, Check	1	
-9	AN960-516	. . . WASHER	1	
	18C1459-1	. . . BEARING ASSEMBLY, Centering spring rod end	1	
		Attaching Parts		
-10	AN22-22	. . . BOLT	2	
	AN381-2-10	. . . PIN, Cotter	2	
	AN320-2	. . . NUT	2	
	AN960D8	. . . WASHER	4	
		———*———		
-11	18C1459-2	. . . . ROD END	1	
-12	KS3L	. . . . BEARING (FAF)	1	
-13	18C1458-6	. . . RETAINER, Centering spring	1	
-14	18C1461-9	. . . ROD ASSEMBLY, Longitudinal centering spring piston	1	
-15	18C1463-2	. . . PISTON, Longitudinal centering spring	2	
-16	22C1501-1	. . . SPRING, Centering	1	
-17	18C1458-3	. . . HOUSING, Longitudinal centering spring	1	
	18C1458-7	. . . RETAINER, Centering spring	1	
-18	R-420M20	. . BRAKE, Magnetic (ARBN)	1	J,CK
■	PHS406-1L-1-270	. . BRAKE, Geared magnetic (PHL) (D106 (JH))	1	CL,D
		Attaching Parts		
-19	AN4-25A	. . BOLT	4	J,CK
	AN4-7A	. . BOLT	4	CL,D
	AN960D416L	. . WASHER	4	
		———*———		
	22C1020-1	SPRING INSTALLATION, Directional centering	1	J,CK
	22C1020-3	SPRING INSTALLATION, Directional centering	1	CL,D
-20	22C1020-2	. SPRING ASSEMBLY, Directional centering	1	J,CK
	22C1020-4	. SPRING ASSEMBLY, Directional centering	1	CL,D
-21	22C1401-3	. . ROD ASSEMBLY, Directional centering spring	1	
		Attaching Parts		
-22	AN3-14A	. . BOLT	1	
	AN365-1032	. . NUT	2	
	AN960-10	. . WASHER	3	
		———*———		
	REB3N2	. . . BEARING, Rod end (FAF)	1	
	AN316-5R	. . . NUT, Check	2	
	AN315-5R	. . . NUT, Check	1	
	AN960-516	. . . WASHER	1	
	18C1459-1	. . . BEARING ASSEMBLY, Centering spring rod end	1	
	18C1458-6	. . . RETAINER, Centering spring	1	
	18C1461-11	. . . ROD ASSEMBLY, Directional centering spring piston	1	
	22C1500-1	. . . PISTON, Directional centering spring	2	
	18C1464-1	. . . SPRING, Directional centering	1	
	18C1458-8	. . . HOUSING, Directional centering spring	1	
	18C1458-7	. . . RETAINER, Centering spring	1	
-23	R-420M21	. . BRAKE, Magnetic (ARBN)	1	J,CK
■	PHS460-1L-2-360	. . BRAKE, Geared magnetic (PHL) (D106-2 (JH))	1	CL,D
		Attaching Parts		
-24	AN4-24A	. . BOLT	2	J,CK

Figure and Index Number	Part Number	1 2 3 4 5 6 7 Description	Units per Assembly	Usable On Code
60-	AN4-7A	. . BOLT	2	CL,D
-25	AN4-23A	. . BOLT	2	J,CK
	AN4-6A	. . BOLT	2	CL,D
	AN365-428	. . NUT	4	
-26	AN960D416	. . WASHER	4	
-27	AN960D416L	. . WASHER	4	
		———*———		
	22C1019-5	SPRING INSTALLATION, Lateral centering	1	J,CK
	22C1019-3	SPRING INSTALLATION, Lateral centering	1	CL,D
-28	22C1019-6	. SPRING ASSEMBLY, Lateral centering	1	J,CK
	22C1019-4	. SPRING ASSEMBLY, Lateral centering	1	CL,D
-29	22C1401-5	. . ROD ASSEMBLY, Lateral centering spring	1	
		Attaching Parts		
-30	AN3-13A	. . BOLT	1	
	AN365-1032	. . NUT	2	
	AN960D10	. . WASHER	2	
-31	AN960D10L	. . WASHER	1	
		———*———		
	REB3N2	. . . BEARING, Rod end (FAF)	1	
	AN316-5R	. . . NUT, Check	2	
	AN315-5R	. . . NUT, Check	1	
	AN960-516	. . . WASHER	1	
	18C1459-1	. . . BEARING ASSEMBLY, Centering spring rod end	1	
	18C1458-5	. . . RETAINER, Lateral centering spring	1	
	18C1461-10	. . . ROD ASSEMBLY, Lateral centering spring piston	1	
	18C1463-3	. . . PISTON, Lateral centering spring	2	
	22C1501-1	. . . SPRING, Centering	1	
	18C1458-2	. . . HOUSING ASSEMBLY, Lateral centering spring	1	
	18C1458-7	. . . RETAINER, Centering spring	1	
-32	R-420M20	. . BRAKE, Magnetic (ARBN)	1	J,CK
■	PHS406-1R-1-270	. . BRAKE, Geared magnetic (PHL) (D106 (JH))	1	CL,D
		Attaching Parts		
-33	AN4-24A	. . BOLT	4	J,CK
	AN4-7A	. . BOLT	4	CL,D
	AN365-428	. . NUT	4	
	AN960D416	. . WASHER	4	
	AN960D416L	. . WASHER	4	
		———*———		

Controls

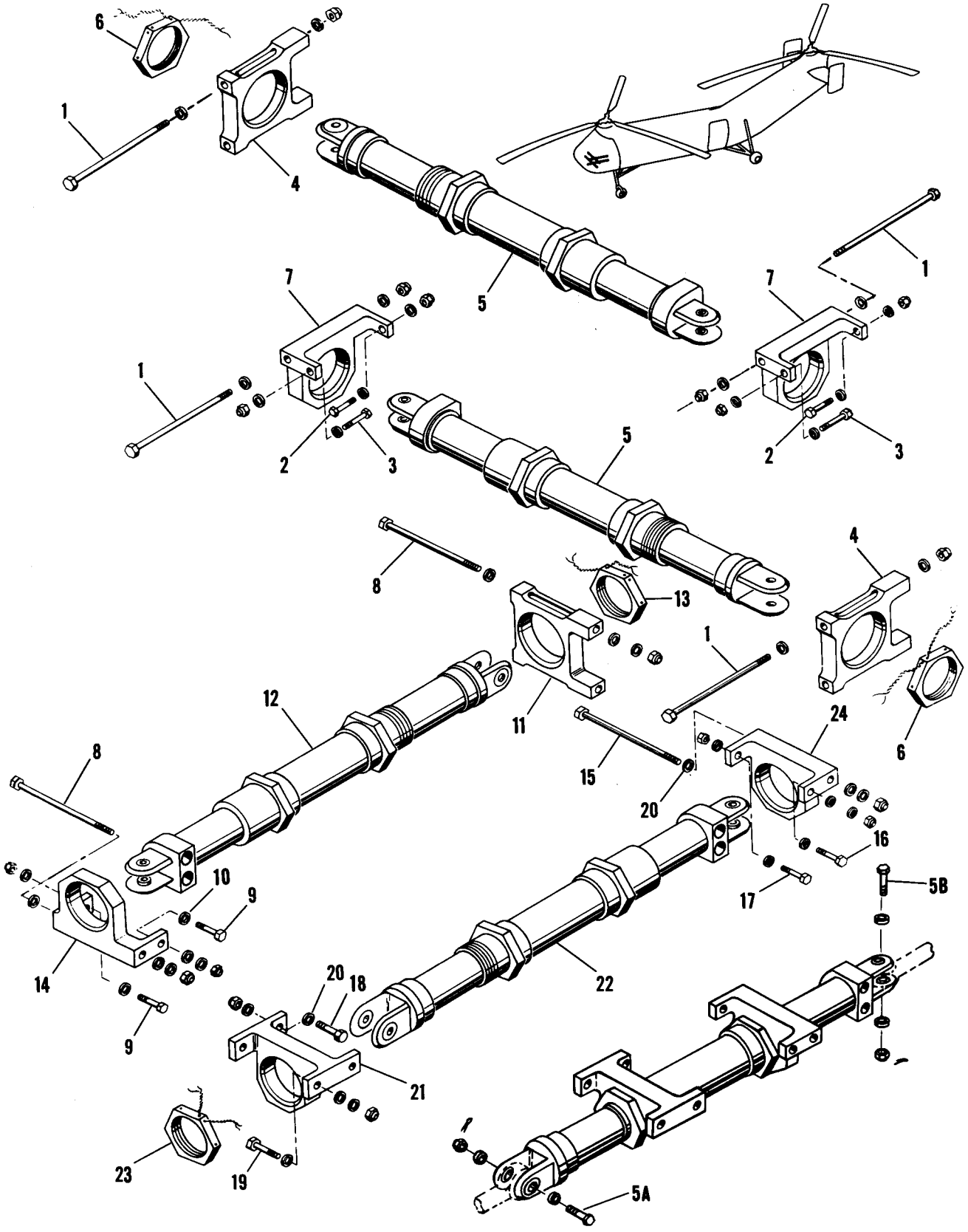

Figure 61. Hydraulic Actuators

Figure and Index Number	Part Number	Description 1 2 3 4 5 6 7	Units per Assembly	Usable On Code
61-	22C1024-3	ACTUATOR INSTALLATION, Directional hydraulic	1	
	22C1024-2	ACTUATOR INSTALLATION, Lateral hydraulic	1	
	22C1024-7	. ACTUATOR ASSEMBLY, Directional	1	
	22C1024-6	. ACTUATOR ASSEMBLY, Lateral	1	
		Attaching Parts		
-1	AN174-43A	. BOLT	3	
-2	AN173-6A	. BOLT	1	
-3	AN173-10A	. BOLT	1	
	AN365-428	. NUT	3	
	AN365-1032	. NUT	2	
	AN960D416	. WASHER	6	
	AN960D10	. WASHER	4	
		———*———		
-4	22C1751-1	. . MOUNT, Actuator thrust	1	
-5	1405-4-00	. . ACTUATOR, Hydraulic (BAAP)	1	
		Attaching Parts		
-5A	18C1448-1	. . BOLT	1	
-5B	AN174-13	. . BOLT	1	
	AN381-2-12	. . PIN, Cotter	2	
	AN310-3	. . NUT	1	
	AN310-4	. . NUT	1	
	AN960-10	. . WASHER (Under nut)	1	
	AN960-416	. . WASHER (Under nut)	1	
	AN960-416L	. . WASHER (Under hd)	2	
		———*———		
-6	D1125	. . NUT (BAAP)	1	
-7	22C1752-1	. SUPPORT, Actuator mount	1	
	22C1024-4	ACTUATOR INSTALLATION, Collective pitch hydraulic	1	
	22C1024-8	. ACTUATOR ASSEMBLY, Collective pitch	1	
		Attaching Parts		
-8	AN174-41A	. BOLT	3	
-9	AN173-6A	. BOLT	2	
	AN365-428	. NUT	3	
	AN365-1032	. NUT	2	
	AN960D416	. WASHER	3	
	AN960D416L	. WASHER	3	
	AN960D10	. WASHER	3	
-10	AN960D10L	. WASHER	1	
		———*———		
-11	22C1751-1	. . MOUNT, Actuator thrust	1	
-12	1405-4-90	. . ACTUATOR, Hydraulic (BAAP)	1	
		Attaching Parts		
	18C1448-1	. . BOLT	1	
	AN174-13	. . BOLT	1	
	AN381-2-12	. . PIN, Cotter	2	
	AN310-3	. . NUT	1	
	AN310-4	. . NUT	1	
	AN960-10	. . WASHER	1	
	AN960-416	. . WASHER	1	
	AN960-416L	. . WASHER	2	
		———*———		
-13	D1125	. . NUT (BAAP)	1	
-14	22C1752-1	. SUPPORT, Actuator mount	1	
	22C1024-1	ACTUATOR INSTALLATION, Longitudinal hydraulic	1	
	22C1024-5	. ACTUATOR ASSEMBLY, Longitudinal	1	
		Attaching Parts		
-15	AN174-41A	. BOLT	1	
-16	AN173-5A	. BOLT	1	
-17	AN173-6A	. BOLT	1	
-18	AN174-6A	. BOLT	2	
-19	AN174-7A	. BOLT	2	

Figure and Index Number	Part Number	1 2 3 4 5 6 7 Description	Units per Assembly	Usable On Code
61-	AN365-428	. NUT	5	
	AN365-1032	. NUT	2	
	AN960D416	. WASHER	7	
-20	AN960D416L	. WASHER	3	
		———*———		
-21	22C1750-1	. . MOUNT, Actuator thrust	1	
-22	1405-4-90	. . ACTUATOR, Hydraulic (BAAP)	1	
		Attaching Parts		
	18C1448-1	. . BOLT	1	
	AN174-13	. . BOLT	1	
	AN381-2-12	. . PIN, Cotter	2	
	AN310-3	. . NUT	1	
	AN310-4	. . NUT	1	
	AN960-10	. . WASHER (Under nut)	1	
	AN960-416	. . WASHER (Under nut)	1	
	AN960-416L	. . WASHER (Under hd)	2	
		———*———		
-23	D1125	. . NUT (BAAP)	1	
-24	22C1752-1	. SUPPORT, Actuator mount	1	

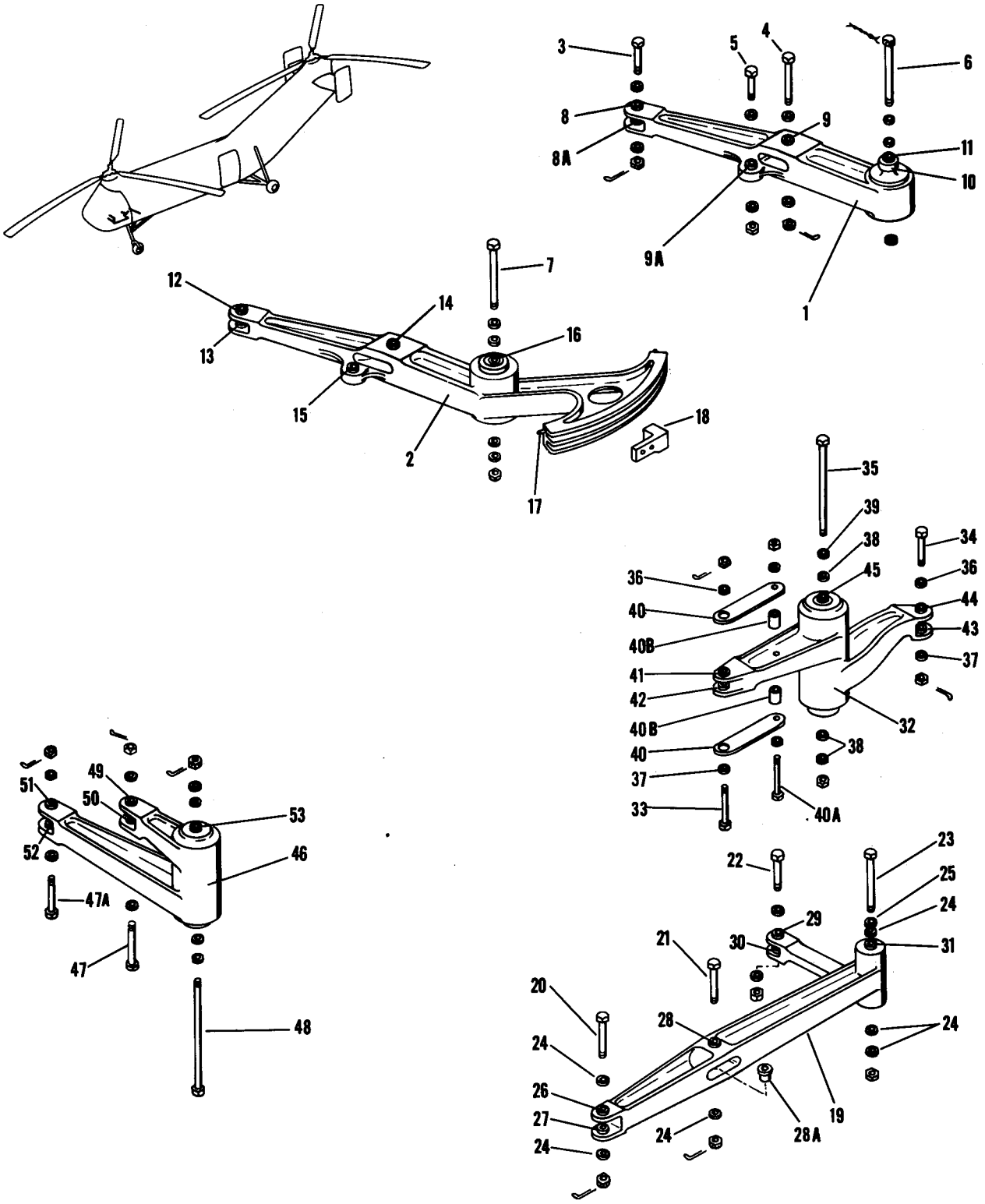

Figure 62. Idler Bellcranks

Figure and Index Number	Part Number	Description 1 2 3 4 5 6 7	Units per Assembly	Usable On Code
62-	22C1025-1	BELLCRANK INSTALLATION, Lower longitudinal	1	J
	42C1025-1	BELLCRANK INSTALLATION, Lower longitudinal	1	AU
-1	22C1600-3	. BELLCRANK ASSEMBLY, Lower longitudinal	1	J
	or			
	22C1600-1	. BELLCRANK ASSEMBLY, Lower longitudinal	1	J
-2	42C1600-5	. BELLCRANK ASSEMBLY, Lower longitudinal	1	AU
	or			
	42C1600-3	. BELLCRANK ASSEMBLY, Lower longitudinal	1	AU
	or			
	42C1600-1	. BELLCRANK ASSEMBLY, Lower longitudinal	1	AU
		Attaching Parts		
-3	AN174-15	. BOLT	1	
-4	AN174-20	. BOLT	1	
-5	AN4-15A	. BOLT, See fig. 69	Ref	
-6	AN175H33A	. BOLT (Used with 22C1600-3)	1	J
	AN174H33A	. BOLT (Used with 22C1600-1)	1	J
-7	AN175-32A	. BOLT	1	AU
	AN381-2-12	. PIN, Cotter	2	
	AN310-4	. NUT	2	
	AN365-524	. NUT	1	AU
	AN960D416	. WASHER (Two used with 22C1600-1)	4	J
	AN960D516	. WASHER (Used with 22C1600-3)	2	J
	AN960D416	. WASHER	2	AU
	AN960D416L	. WASHER (One used under bolt hd with 22C1600-1)	3	J
	AN960D516L	. WASHER (Used under bolt hd with 22C1600-3)	1	J
	AN960D416L	. WASHER (Under bolt hd)	2	AU
	AN960D516	. WASHER	4	AU
		———*———		
-8	NAS75-4-012	. . BUSHING (Used with 22C1600-4)	1	J
-8A	NAS77-4-18	. . BUSHING (Used with 22C1600-4)	1	J
	NAS75-4-010	. . BUSHING (Used with 22C1600-2)	2	J
-9	NAS75-4-021	. . BUSHING (Used with 22C1600-4)	1	J
	NAS77-4-33	. . BUSHING (Used with 22C1600-4)	1	J
-9A	NAS75-4-020	. . BUSHING (Used with 22C1600-4)	1	J
	NAS75-4-017	. . BUSHING (Used with 22C1600-2)	3	J
-10	42C1622-5	. . SPACER (Used with 22C1600-4)	2	J
	22C1694-1	. . INSERT (Used with 22C1600-2)	1	J
-11	AN201KP5A	. . BEARING (Used with 22C1600-4)	1	J
	AN201KP4A	. . BEARING (Used with 22C1600-2)	1	J
	22C1753-87	. . SPACER (Used with 22C1600-4)	1	J
	22C1753-80	. . SPACER (Used with 22C1600-2)	1	J
-12	NAS75-4-013	. . BUSHING (Used with 42C1600-6)	1	AU
	NAS75-4-012	. . BUSHING (Used with 42C1600-4)	1	AU
	NAS75-4-010	. . BUSHING (Used with 42C1600-2)	1	AU
-13	NAS77-4-18	. . BUSHING (Used with 42C1600-6 and -4)	1	AU
	NAS75-4-011	. . BUSHING (Used with 42C1600-2)	1	AU
-14	NAS75-4-021	. . BUSHING (Used with 42C1600-6 and -4)	1	AU
	NAS75-4-017	. . BUSHING (Used with 42C1600-2)	2	AU
	NAS77-4-36	. . BUSHING (Used with 42C1600-4)	1	AU
	NAS77-4-25	. . BUSHING (Used with 42C1600-6)	1	AU
-15	NAS75-4-020	. . BUSHING (Used with 42C1600-6)	1	AU
	NAS75-4-017	. . BUSHING (Used with 42C1600-4 and -2)	1	AU
-16	AN201KP5A	. . BEARING (Used with 42C1600-6 and -4)	2	AU
	42C1622-7	. . SPACER (Used with 42C1600-6 and -2)	2	AU
	22C1753-74	. . SPACER	1	AU
-17	AN150520	. . STUD	2	AU
	AN150521	. . STUD (0.003 in. oversize)	AR	AU
	22C1600-4	. . BELLCRANK (Used with 22C1600-3)	1	J
	22C1600-2	. . BELLCRANK (Used with 22C1600-1)	1	J
	42C1600-6	. . BELLCRANK (Used with 42C1600-5)	1	AU
	42C1600-4	. . BELLCRANK (Used with 42C1600-3)	1	AU

Figure and Index Number	Part Number	Description 1 2 3 4 5 6 7	Units per Assembly	Usable On Code
62-	42C1600-2	. . BELLCRANK (Used with 42C1600-1)	1	AU
-18	42C1294-1	. GUARD, Cable	1	AU
	42C1297-1	. GUARD, Cable	1	AU
		Attaching Parts		
	AN515-8-10	. SCREW	2	
	AN509-10R21	. SCREW	1	AU
	AN364-832	. NUT	2	
	AN364-1032	. NUT	1	AU
	AN960D8	. WASHER	4	
	AN960D10	. WASHER	1	
	AN960D8L	. WASHER	AR	
	AN960D10L	. WASHER	AR	
		———*———		
	22C1026-1	BELLCRANK INSTALLATION, Lower lateral	1	
-19	22C1612-3	. BELLCRANK ASSEMBLY, Lower lateral	1	
	or			
	22C1612-1	. BELLCRANK ASSEMBLY, Lower lateral	1	
		Attaching Parts		
-20	AN174-15	. BOLT	1	
-21	AN174-20	. BOLT	1	
-22	AN3-13A	. BOLT, See fig. 60	Ref	
-23	AN174-35A	. BOLT	1	
	AN381-2-12	. PIN, Cotter	2	
	AN310-4	. NUT	1	
	AN320-4	. NUT (Used with bolt AN174-20)	1	
	AN365-428	. NUT	1	
-24	AN960D416	. WASHER	6	
-25	AN960D416L	. WASHER	1	
		———*———		
-26	NAS77-4-19	. . BUSHING (Used with 22C1612-4)	1	
	NAS75-4-011	. . BUSHING (Used with 22C1612-2)	1	
-27	NAS75-4-013	. . BUSHING (Used with 22C1612-4)	1	
	NAS75-4-010	. . BUSHING (Used with 22C1612-2)	1	
-28	NAS75-4-023	. . BUSHING (Used with 22C1612-4)	1	
	NAS75-4-016	. . BUSHING (Used with 22C1612-2)	1	
-28A	NAS77-4-33	. . BUSHING (Used with 22C1612-4)	1	
	NAS75-4-020	. . BUSHING (Used with 22C1612-2)	1	
-29	NAS77-3-18	. . BUSHING (Used with 22C1612-4)	1	
	NAS75-3-011	. . BUSHING (Used with 22C1612-2)	1	
-30	NAS75-3-012	. . BUSHING (Used with 22C1612-4)	1	
	NAS75-3-010	. . BUSHING (Used with 22C1612-2)	1	
-31	AN201KP4A	. . BEARING	2	
	42C1622-4	. . SPACER (Used with 22C1612-4)	2	
	22C1622-3	. . BUSHING (Used with 22C1612-2)	2	
	22C1753-3	. . SPACER	1	
	22C1612-4	. . BELLCRANK (Used with 22C1612-3)	1	
	22C1612-2	. . BELLCRANK (Used with 22C1612-1)	1	
	22C1026-2	BELLCRANK INSTALLATION, Lower directional	1	
-32	22C1611-13	. BELLCRANK ASSEMBLY, Lower directional	1	
	or			
	22C1611-11	. BELLCRANK ASSEMBLY, Lower directional	1	
	or			
	22C1611-1	. BELLCRANK ASSEMBLY, Lower directional	1	
		Attaching Parts		
▮ -33	AN174-14	. BOLT	1	
-34	AN174-15	. BOLT	1	
-35	AN176-67A	. BOLT	1	
	AN381-2-12	. PIN, Cotter	2	
	AN310-4	. NUT	2	
	AN365-624	. NUT	1	
-36	AN960-416	. WASHER	3	
-37	AN960-416L	. WASHER	1	

Figure and Index Number	Part Number	Description 1 2 3 4 5 6 7	Units per Assembly	Usable On Code
62-38	AN960-616	. WASHER	3	
-39	AN960-616L	. WASHER	1	
		———*———		
-40	22C1611-7	. . PLATE	2	
		Attaching Parts		
-40A	AN23-23A	. . BOLT (Used with 22C1611-13)	1	
	AN23-22A	. . BOLT (Used with 22C1611-1 and -11)	1	
	AN365-1032	. . NUT	1	
	AN960D10L	. . WASHER	2	
		———*———		
-40B	22C1611-6	. . SPACER (Used with 22C1611-1 and -11)	2	
-41	NAS75-4-012	. . BUSHING (Used with 22C1611-13)	1	
	NAS75-4-010	. . BUSHING (Used with 22C1611-1 and -11)	1	
-42	NAS77-4-17	. . BUSHING (Used with 22C1611-11 and -13)	1	
	NAS75-4-010	. . BUSHING (Used with 22C1611-1)	1	
-43	NAS77-4-19	. . BUSHING (Used with 22C1611-11 and -13)	1	
	NAS75-4-010	. . BUSHING (Used with 22C1611-1)	1	
-44	NAS75-4-012	. . BUSHING (Used with 22C1611-13)	1	
	NAS75-4-011	. . BUSHING (Used with 22C1611-1 and -11)	1	
-45	AN201KP6A	. . BEARING	2	
	42C1622-6	. . SPACER (Used with 22C1611-13)	2	
	22C1622-2	. . BUSHING (Used with 22C1611-1)	2	
	22C1753-2	. . SPACER	1	
	22C1611-14	. . BELLCRANK (Used with 22C1611-13)	1	
	22C1611-12	. . BELLCRANK (Used with 22C1611-11)	1	
	22C1611-2	. . BELLCRANK (Used with 22C1611-1)	1	
	22C1027-3	BELLCRANK INSTALLATION, Lower collective pitch	1	
	or			
	22C1027-2	BELLCRANK INSTALLATION, Lower collective pitch	1	
-46	22C1772-5	. BELLCRANK ASSEMBLY, Lower collective pitch (used with 22C1027-3)	1	
	or			
	22C1772-7	. BELLCRANK ASSEMBLY, Lower collective pitch (used with 22C1027-3)	1	
	or			
	22C1772-8	. BELLCRANK ASSEMBLY, Lower collective pitch (used with 22C1027-3)	1	
	or			
	22C1772-3	. BELLCRANK ASSEMBLY, Lower collective pitch (used with 22C1027-2)	1	
	or			
	22C1772-1	. BELLCRANK ASSEMBLY, Lower collective pitch (used with 22C1027-2)	1	
		Attaching Parts		
-47	AN174-16	. BOLT	1	
-47A	AN174-17	. BOLT	1	
-48	AN176-60	. BOLT (Used with 22C1772-5, -7, and -8)	1	
	AN174-57	. BOLT (Used with 22C1772-1 and -3)	1	
	AN381-2-12	. PIN, Cotter	3	
	AN381-3-14	. PIN, Cotter (used with 22C1772-5, -7, and -8)	1	
	AN381-2-10	. PIN, Cotter (used with 22C1772-1 and -3)	1	
	AN310-4	. NUT (One used with 22C1772-1 and -3)	2	
	AN310-6	. NUT (Used with 22C1772-5, -7, and -8)	1	
	AN960-416	. WASHER	4	
	AN960-616	. WASHER (Used with 22C1772-5, -7, and -8)	4	
	AN960D616L	. WASHER (Used with 22C1772-5, -7, and -8)	2	
		———*———		
-49	NAS75-4-018	. . BUSHING (Used with 22C1772-3, -5, and -8)	1	
	NAS75-4-012	. . BUSHING (Used with 22C1772-1 and -7)	1	
-50	NAS77-4-27	. . BUSHING (Used with 22C1772-3, -5, and -8)	1	
	NAS75-4-013	. . BUSHING (Used with 22C1772-1 and -7)	1	
-51	NAS77-4-26	. . BUSHING (Used with 22C1772-3, -5, and -8)	1	
	NAS75-4-012	. . BUSHING (Used with 22C1772-1 and -7)	1	
-52	NAS75-4-014	. . BUSHING (Used with 22C1772-3, -5, and -8)	1	
	NAS75-4-013	. . BUSHING (Used with 22C1772-1 and -7)	1	

Figure and Index Number	Part Number	1 2 3 4 5 6 7 Description	Units per Assembly	Usable On Code
62-53	AN201KP6A	. . BEARING (Used with 22C1772-5, -7, and -8)	2	
	AN200KP4	. . BEARING (Used with 22C1772-1 and 3)	2	
	22C1753-86	. . SPACER (Used with 22C1772-5, -7, and -8)	1	
	22C1753-4	. . SPACER (Used with 22C1772-1 and -3)	1	
	42C1624-1	. . BUSHING (Used with 22C1772-7 and -8)	2	
	42C1622-5	. . SPACER (Used with 22C1772-5)	2	
	22C1622-1	. . BUSHING (Used with 22C1772-1)	2	
	22C1772-6	. . BELLCRANK (Used with 22C1772-5)	1	
	22C1772-2	. . BELLCRANK (Used with 22C1772-1 and -7)	1	
	22C1772-9	. . BELLCRANK (Used with 22C1772-8)	1	
	22C1772-4	. . BELLCRANK (Used with 22C1772-3)	1	

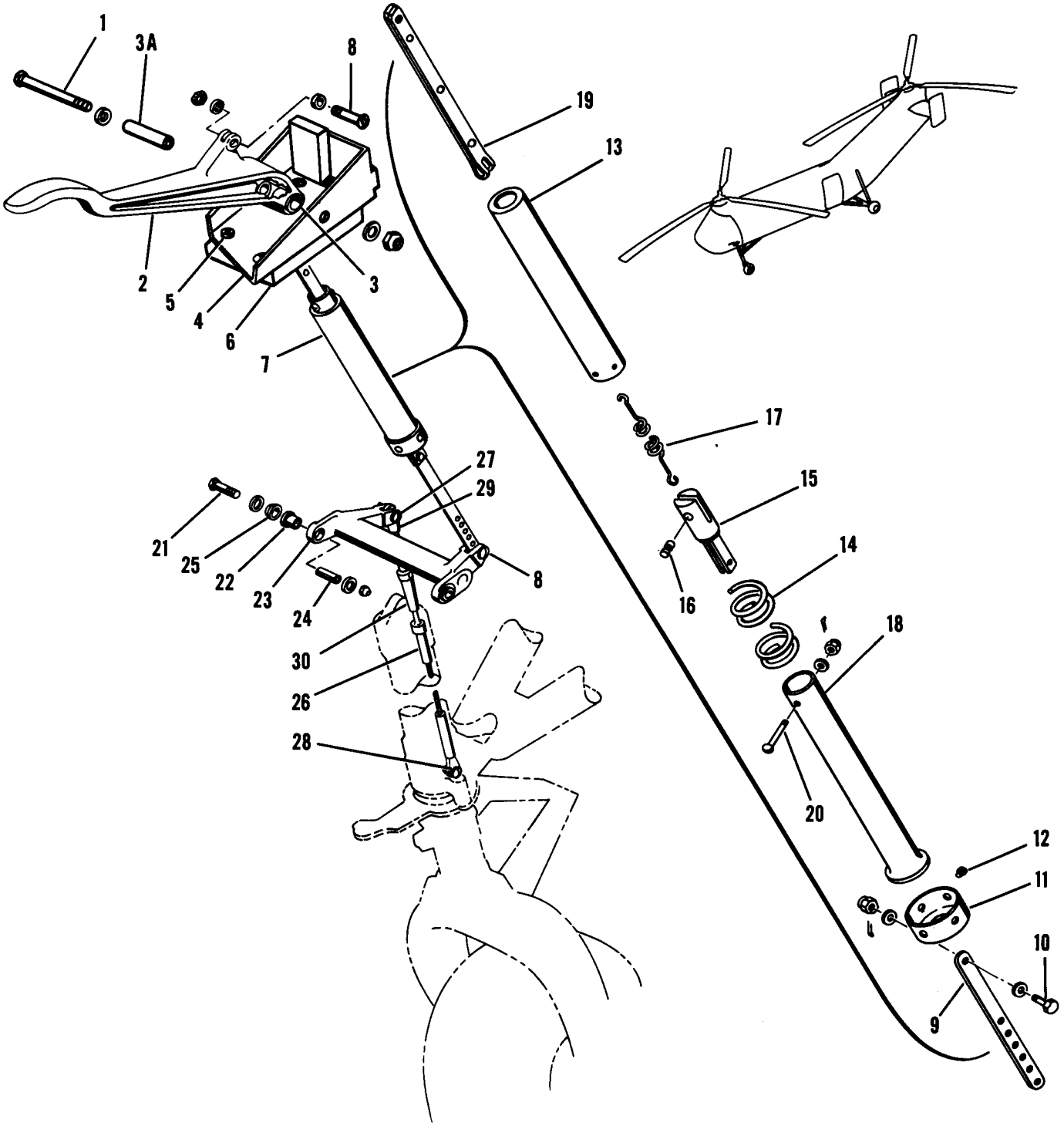

Figure 63. Auxiliary Alighting Wheel Lock

Figure and Index Number	Part Number	Description 1 2 3 4 5 6 7	Units per Assembly	Usable On Code
63-	22C1005-3	LOCK INSTALLATION, Aux alighting wheel	1	J
	42C4001-1	LOCK INSTALLATION, Aux alighting wheel	1	AU
	22C1825-1	. LEVER ASSEMBLY, Aux alighting wheel lock	1	
		Attaching Parts		
-1	AN4-21A	. BOLT	1	J
	AN394-53	. PIN, Flat hd	1	AU
	AN364-428	. NUT	1	J
	AN381-2-8	. PIN, Cotter	1	AU
	AN960-416	. WASHER	1	J
	AN960-416L	. WASHER	1	
		———*———		
-2	22C1825-2	. . LEVER	1	
-3	NAS77A6-38P	. . BUSHING	2	
-3A	22C1753-43	. SPACER	1	
-4	17C1780-7	. BRACKET ASSEMBLY, Aux alighting wheel lock lever support	1	J
	17C1780-10	. BRACKET ASSEMBLY, Aux alighting wheel lock lever support	1	AU
	42C1623-1	. SUPPORT ASSEMBLY, Aux wheel lock lever	1	AU
		Attaching Parts		
-5	AN23-17A	. BOLT	4	
	AN365-1032	. NUT	4	
	AN960D10	. WASHER	4	
	AN960-10L	. WASHER	4	
		———*———		
-6	22C1005-4	. SPACER	1	
-7	22C1829-8	. BUNGEE ASSEMBLY, Aux alighting wheel lock	1	
		Attaching Parts		
-8	AN23-13	. BOLT	2	
	AN381-2-8	. PIN, Cotter	2	
	AN320-3	. NUT	2	
	AN960D10	. WASHER	2	
	AN960D10L	. WASHER	2	
		———*———		
-9	17C2403-2	. . LINK, Engine control cabling adjusting	1	
		Attaching Parts		
-10	AN23-10	. . BOLT	1	
	AN381-2-8	. . PIN, Cotter	1	
	AN320-3	. . NUT	1	
	AN960-10	. . WASHER	1	
	AN960-10L	. . WASHER	1	
		———*———		
	22C1829-9	. . BUNGEE SUBASSEMBLY, Aux alighting wheel lock	1	
-11	17C1788-2	. . . CAP	1	
		Attaching Parts		
-12	17C1790-1	. . . SCREW, Set	4	J,EM
	AN365E1032HG3	. . . SCREW, Set	4	EI,EH
		———*———		
-13	17C1787-2	. . . TUBE	1	
	or			
	17C1787-1	. . . TUBE	1	
	42C1802-1	. . . WASHER (Used with 17C1787-2)	1	
-14	17C1786-1	. . . SPRING	1	
-15	42C1366-1	. . . FITTING, End	1	
	or			
	17C1775-3	. . . FITTING, End	1	
-16	17C1789-2	. . . PIN	1	
-17	17C1778-1	. . . SPRING	1	
-18	17C1777-1	. . . TUBE	1	
-19	22C1852-3	. . . TERMINAL ASSEMBLY	1	
		Attaching Parts		
-20	AN23-14	. . . BOLT	1	
	AN381-2-8	. . . PIN, Cotter	1	

Figure and Index Number	Part Number	1 2 3 4 5 6 7 Description	Units per Assembly	Usable On Code
63-	AN320-3	. . . NUT	1	
	AN960-10L	. . . WASHER	1	
		*—		
	22C1827-1	. BELLCRANK ASSEMBLY	1	
		Attaching Parts		
-21	AN3-16A	. BOLT	2	J
	AN3-10A	. BOLT	2	AU
	AN365-1032	. NUT	2	
	AN960D10	. WASHER	2	
	AN960D10L	. WASHER	2	
		*—		
-22	NAS77A4-38P	. . BUSHING	2	
-23	22C1827-2	. . BELLCRANK	1	
-24	22C1753-49	. SPACER	2	
-25	NAS77A4-10P	. BUSHING	2	
-26	22C1831-1	. CABLE ASSEMBLY, Aux alighting wheel lock	1	
		Attaching Parts		
-27	AN23-14	. BOLT	1	
-28	AN23-10	. BOLT	1	J
	AN23-9	. BOLT	1	AU
	AN381-2-8	. PIN, Cotter	2	
	AN320-3	. NUT	2	
	AN960D10	. WASHER	1	
	AN960D10L	. WASHER	1	
	AN960-10	. WASHER (At lock pin)	1	
	AN960-10L	. WASHER (At lock pin)	1	
		*—		
-29	AN165-16S	. . TERMINAL	1	
-30	AN155-16S	. . BARREL	1	

Controls

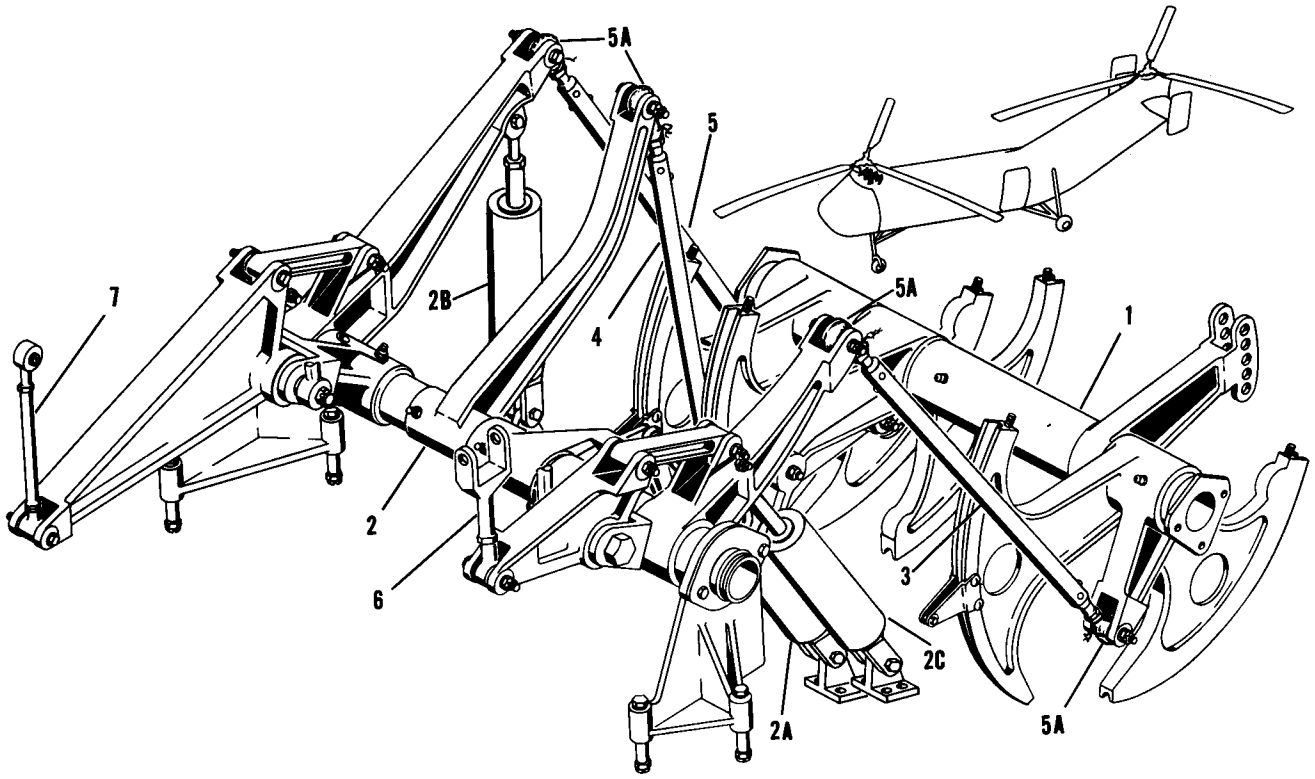

Figure 64. Forward Upper Controls

Figure and Index Number	Part Number	Description 1 2 3 4 5 6 7	Units per Assembly	Usable On Code
64-	22C1003-1	CONTROLS INSTALLATION, Forward upper	1	J,IH
	42C1003-1	CONTROLS INSTALLATION, Forward upper	1	II
-1	22C1650	. QUADRANT ASSEMBLY, Fwd upper controls, see fig. 64A*	Ref	
-2	22C1670	. BELLCRANK ASSEMBLY, Fwd upper controls, see fig. 65*	Ref	
	42C1760-1	. BELLCRANK ASSEMBLY, Fwd upper controls, see fig. 65	Ref	
-2A	42E7089-2	. DAMPER ASSEMBLY, Collective pitch hydraulic	1	II
-2B	42E7089-3	. DAMPER ASSEMBLY, Longitudinal hydraulic	1	II
-2C	42E7089-4	. DAMPER ASSEMBLY, Lateral hydraulic	1	II
		Attaching Parts		
	AN175-24	. BOLT	1	II
	AN25-48	. BOLT (Used with 42E7089-2)	1	II
	AN174-21	. BOLT (Used with 42E7089-3)	1	II
	AN25-30	. BOLT (Used with 42E7089-4)	1	II
	AN381-2-10	. PIN, Cotter	2	II
	AN310-5	. NUT	1	II
	AN320-5	. NUT (Used with 42E7089-2 and -4)	1	II
	AN310-4	. NUT (Used with 42E7089-3)	1	II
	AN960-516	. WASHER	2	II
	AN960-516	. WASHER (Used with 42E7089-2 and -4)	1	II
	AN960-516L	. WASHER (Used with 42E7089-2 and -4)	1	II
	AN960-516	. WASHER (Used with 42E7089-3)	1	II
	AN960-516L	. WASHER (Used with 42E7089-3)	1	II
		———*———		
	5527540	. . DAMPER ASSEMBLY, Hydraulic (DE) (used with 42E7089-2)	1	II
	5527541	. . DAMPER ASSEMBLY, Hydraulic (DE) (used with 42E7089-3 and -4)	1	II
	REP5M6-2	. . BEARING, Rod end (FAF) (used with 42E7089-2 and -4)	1	II

*For proper usable on codes and complete breakdown, see figure number as indicated.

Figure and Index Number	Part Number	1 2 3 4 5 6 7 Description	Units per Assembly	Usable On Code
64-	REP4M6-4	. . BEARING, Rod end (FAF) (used with 42E7089-3)	1	II
	NAS77-5-44	. . BUSHING	1	II
	NAS75-5-020	. . BUSHING	1	II
-3	22C1696-11	. ROD ASSEMBLY, Lateral	1	
	or			
	22C1696-3	. ROD ASSEMBLY, Lateral	1	
-4	22C1696-1	. ROD ASSEMBLY, Collective pitch	1	
-5	22C1696-2	. ROD ASSEMBLY, Longitudinal	1	
	RE4M6	. . BEARING, Rod end (FAF)	2	
-5A	17R3065-12	. BOOT	6	
	or			
	17R3065-2	. BOOT	6	
-6	22C1719-1	. LINK ASSEMBLY, Lateral	1	
	MR-5	. . BEARING (SHA)	1	
	AN316-8R	. . NUT	1	
	22C1719-2	. . LINK	1	
-7	22C1682-7	. LINK ASSEMBLY, Longitudinal	1	
	or			
	22C1682-5	. LINK ASSEMBLY, Longitudinal	1	
	or			
	22C1682-1	. LINK ASSEMBLY, Longitudinal	1	
	REP4M6-4	. . BEARING, Rod end (FAF)	1	
	or			
	RE4M6	. . BEARING, Rod end (FAF)	1	
	AN316-6R	. . NUT (One used with 22C1682-5 and -7)	2	
	22C1682-8	. . LINK SUBASSEMBLY	1	
	or			
	22C1682-6	. . LINK SUBASSEMBLY	1	
	or			
	22C1682-2	. . LINK SUBASSEMBLY	1	
	REP4M6-4	. . . BEARING, Rod end (FAF)	1	
	or			
	RE4M6	. . . BEARING, Rod end (FAF)	1	
	42C1631-1	. . . NUT (Used with 22C1682-6 and-8)	1	
	22C1682-2	. . . BARREL	1	

Controls

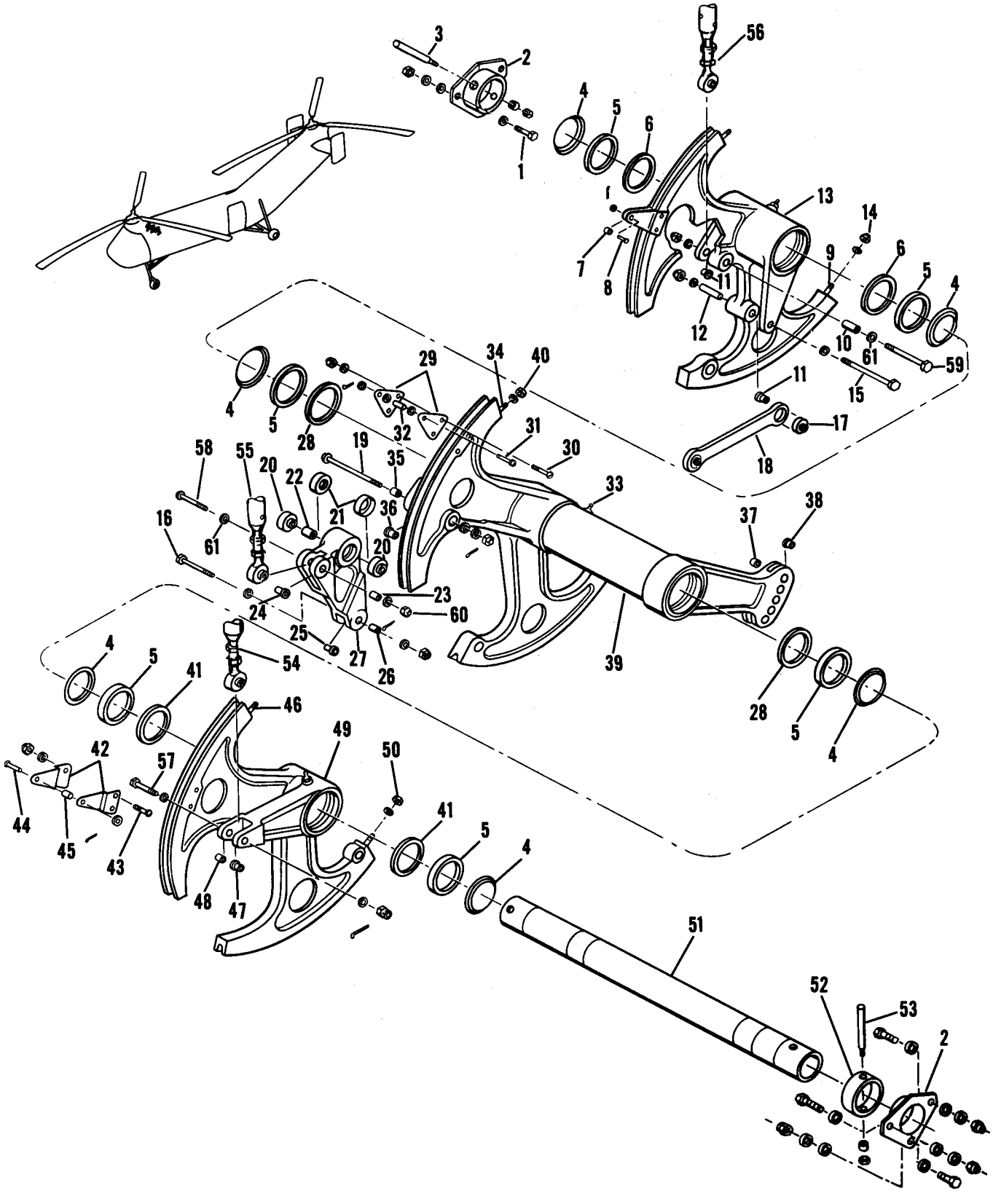

Figure 64A. Forward Upper Controls Quadrant Assembly

Figure and Index Number	Part Number	Description 1 2 3 4 5 6 7	Units per Assembly	Usable On Code
64A-	22C1650-1	QUADRANT ASSEMBLY, Forward upper controls	1	
		Attaching Parts		
-1	AN4-7A	BOLT	6	
	AN365-428	NUT	6	
	AN960D416	WASHER	12	
		———*———		
-2	22C1657-1	. FITTING, Tube support	2	
		Attaching Parts		
-3	AN386-1-16A	. PIN, Taper	1	
	AN364-1032	. NUT	1	
	AN975-3	. WASHER	1	
		———*———		
-4	3C2138-7	. RETAINER, Bearing grease	6	
-5	B544	. BEARING (FAF)	6	
	22C1652-3	. QUADRANT ASSEMBLY, Longitudinal	1	
	or			
	22C1652-1	. QUADRANT ASSEMBLY, Longitudinal	1	
-6	42C1622-2	. . SPACER (Used with 22C1652-3)	2	
	22C1622-4	. . BUSHING (Used with 22C1652-2)	2	
	22C1684-1	. . PLATE	2	
-7	22C1753-15	. . SPACER	1	
		Attaching Parts		
-8	AN393-15	. . PIN, Flat hd	1	
	AN381-2-8	. . PIN, Cotter	1	
	AN960-10L	. . WASHER	1	
		———*———		
-9	AN150520	. . STUD	2	
	AN150521	. . STUD (0.003 in. oversize)	AR	
-10	NAS75-4-118	. . BUSHING (Used with 22C1652-4)	1	
	NAS75-4-116	. . BUSHING (Used with 22C1652-2)	1	
-11	NAS77-4-34	. . BUSHING (Used with 22C1652-4)	2	
	NAS75-4-015	. . BUSHING (Used with 22C1652-2)	2	
-12	NAS75-4-123	. . BUSHING (Used with 22C1652-4)	1	
	NAS75-4-120	. . BUSHING (Used with 22C1652-2)	1	
■	MS15002-1	. . FITTING, Lubricator	1	
-13	22C1652-4	. . QUADRANT (Used with 22C1652-3)	1	
	22C1652-2	. . QUADRANT (Used with 22C1652-1)	1	
-14	AN364-1032	. NUT	2	
	AN960D10	. WASHER	2	
	17C1665-5	. LINK ASSEMBLY, Lateral and longitudinal differential	1	
		Attaching Parts		
-15	AN174-30	. BOLT	1	
-16	AN174-16	. BOLT	1	
	or			
	AN174-15	. BOLT	1	
	AN381-2-12	. PIN, Cotter	2	
	AN310-4	. NUT	2	
	AN960-416	. WASHER	3	
	AN960-416L	. WASHER	2	
		———*———		
-17	AN200KS4	. . BEARING	2	
-18	17C1665-6	. . LINK	1	
	22C1655-3	. BELLCRANK ASSEMBLY, Differential collective pitch	1	
	or			
	22C1655-1	. BELLCRANK ASSEMBLY, Differential collective pitch	1	
		Attaching Parts		
-19	AN24-48	. BOLT	1	
	AN381-2-12	. PIN, Cotter	1	
	AN320-4	. NUT	1	

Figure and Index Number	Part Number	Description 1 2 3 4 5 6 7	Units per Assembly	Usable On Code
64A-	AN960-416	WASHER	2	
		*—		
-20	AN200KP4	. . BEARING	2	
-21	22C1622-1	. . BUSHING (Used with 22C1655-2)	2	
-22	22C1753-8	. . SPACER	1	
-23	NAS75-4-011	. . BUSHING (Used with 22C1655-4)	1	
-24	NAS77-4-14	. . BUSHING (Used with 22C1655-4)	1	
	NAS75-4-009	. . BUSHING (Used with 22C1655-2)	2	
-25	NAS77-4-26	. . BUSHING (Used with 22C1655-4)	1	
-26	NAS75-4-013	. . BUSHING (Used with 22C1655-4)	1	
	NAS75-4-011	. . BUSHING (Used with 22C1655-2)	2	
-27	22C1655-4	. . BELLCRANK (Used with 22C1655-3)	1	
	22C1655-2	. . BELLCRANK (Used with 22C1655-1)	1	
	22C1651-3	. QUADRANT ASSEMBLY, Collective pitch	1	
	or			
	22C1651-1	. QUADRANT ASSEMBLY, Collective pitch	1	
-28	42C1622-2	. . SPACER (Used with 22C1651-3)	2	
	22C1622-4	. . BUSHING (Used with 22C1651-2)	2	
-29	22C1689-1	. . PLATE	2	
		Attaching Parts		
-30	AN23-18A	. . BOLT	2	
-31	AN393-25	. . PIN, Flat hd	1	
	AN364-1032	. . NUT	2	
	AN381-2-8	. . PIN, Cotter	1	
	AN960-10L	. . WASHER	3	
	AN960-10	. . WASHER	2	
		*—		
-32	22C1753-48	. . SPACER	1	
■ -33	MS15002-1	. . FITTING, Lubricator	1	
-34	AN150520	. . STUD	2	
	AN150521	. . STUD (0.003 in. oversize)	AR	
-35	NAS75-4-011	. . BUSHING (Used with 22C1651-4)	1	
	NAS75-4-009	. . BUSHING (Used with 22C1651-2)	1	
-36	NAS77-4-78	. . BUSHING (Used with 22C1651-4)	1	
	NAS75-4-029	. . BUSHING (Used with 22C1651-2)	1	
-37	NAS75-4-011	. . BUSHING (Used with 22C1651-4)	1	
	NAS75-4-010	. . BUSHING (Used with 22C1651-2)	2	
-38	NAS77-4-16	. . BUSHING (Used with 22C1651-4)	1	
	NAS75-4-010	. . BUSHING (Used with 22C1651-2)	1	
-39	22C1651-4	. . QUADRANT (Used with 22C1651-3)	1	
	22C1651-2	. . QUADRANT (Used with 22C1651-1)	1	
-40	AN364-1032	. NUT	2	
	AN960D10	. WASHER	2	
	22C1703-5	. QUADRANT ASSEMBLY, Lateral	1	
	or			
	22C1703-1	. QUADRANT ASSEMBLY, Lateral	1	
-41	42C1622-2	. . SPACER (Used with 22C1703-5)	2	
	22C1622-4	. . BUSHING (Used with 22C1703-3)	2	
-42	22C1684-1	. . PLATE	2	
		Attaching Parts		
-43	AN23-18A	. . BOLT	2	
-44	AN393-15	. . PIN, Flat hd	1	
	AN364-428	. . NUT	2	
	AN381-2-8	. . PIN, Cotter	1	
	AN960-10	. . WASHER	2	
	AN960-10L	. . WASHER	1	
		*—		
-45	22C1753-15	. . SPACER	1	
-46	AN150520	. . STUD	2	
	AN150521	. . STUD (0.003 in. oversize)	AR	
■	MS15002-1	. . FITTING, Lubricator	1	

Figure and Index Number	Part Number	1 2 3 4 5 6 7 Description	Units per Assembly	Usable On Code
64A-47	NAS77-4-23	. . BUSHING (Used with 22C1703-7)	1	
	NAS75-4-013	. . BUSHING (Used with 22C1703-3)	1	
-48	NAS75-4-015	. . BUSHING (Used with 22C1703-7)	1	
	NAS75-4-012	. . BUSHING (Used with 22C1703-3)	1	
-49	22C1703-7	. . QUADRANT (Used with 22C1703-5)	1	
	22C1703-3	. . QUADRANT (Used with 22C1703-1)	1	
-50	AN364-1032	. NUT	2	
	AN960D10	. WASHER	2	
-51	22C1656-1	. SHAFT, Upper controls quadrant	1	
-52	22C1753-28	. SPACER	1	
		Attaching Parts		
-53	AN386-1-16A	. PIN, Taper	1	
	AN364-1032	. NUT	1	
	AN975-3	. WASHER	1	
		———*———		
-54	22C1696	ROD ASSEMBLY, Lateral, see fig. 64*	Ref	
-55	22C1696	ROD ASSEMBLY, Collective pitch, see fig. 64*	Ref	
-56	22C1696	ROD ASSEMBLY, Longitudinal, see fig. 64*	Ref	
		Attaching Parts		
-57	AN174-17	BOLT	1	
-58	AN24-25	BOLT	1	
-59	AN174-30	BOLT	1	
	AN381-2-10	PIN, Cotter	3	
	AN310-4	NUT	2	
-60	AN320-4	NUT	1	
	AN960-416	WASHER	4	
-61	AN960-416L	WASHER	2	
		———*———		

*For proper usable on codes and complete breakdown, see figure number as indicated.

Controls

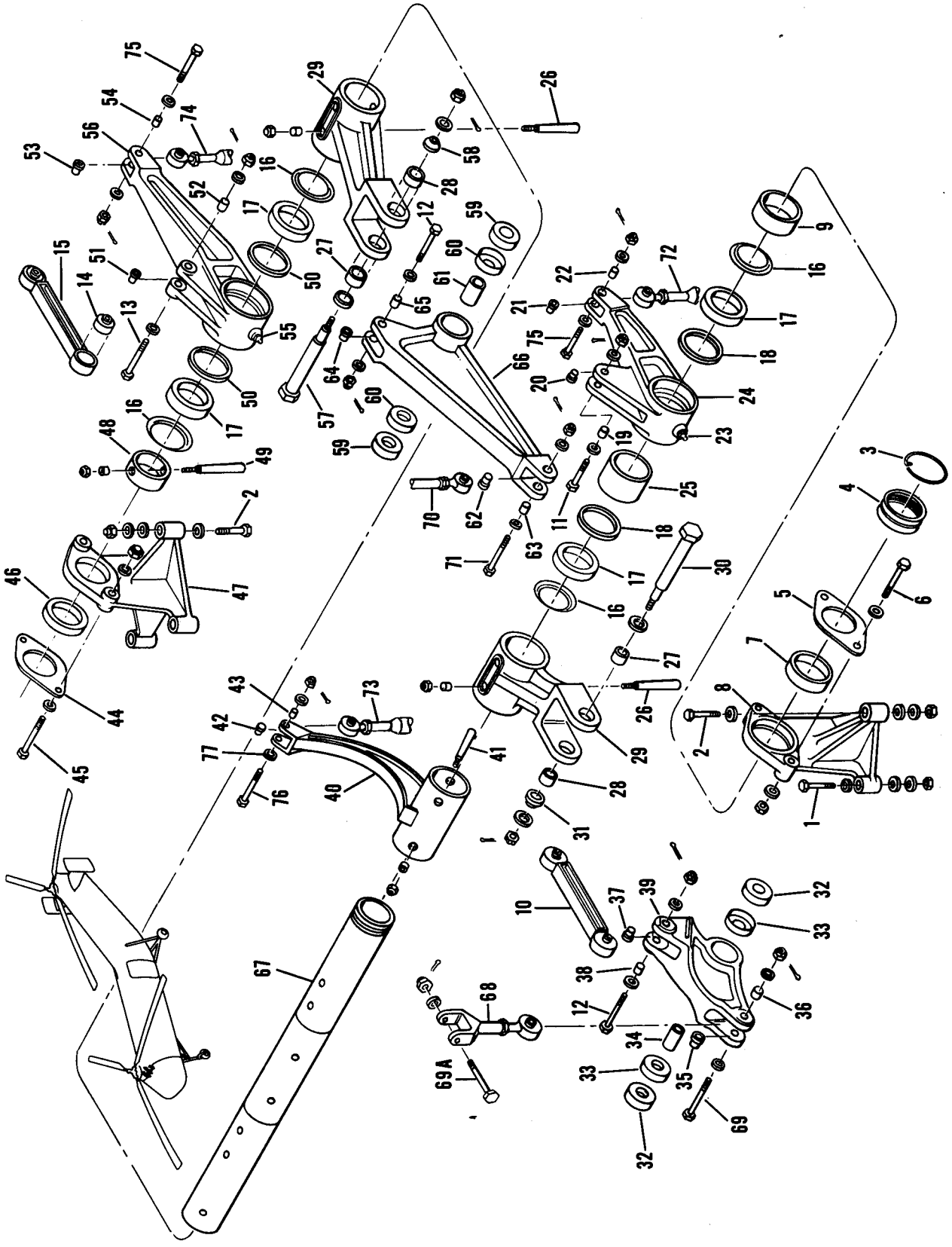

Figure 65. Forward Upper Controls Bellcrank Assembly

Figure and Index Number	Part Number	Description 1 2 3 4 5 6 7	Units per Assembly	Usable On Code
65-	22C1670-3	BELLCRANK ASSEMBLY, Fwd upper controls	1	J,IH
	or			
	22C1670-2	BELLCRANK ASSEMBLY, Fwd upper controls	1	J,IH
	42C1760-1	BELLCRANK ASSEMBLY, Fwd upper controls	1	II
		Attaching Parts		
-1	AN5-22A	BOLT	2	
-2	AN5-24A	BOLT	4	
	AN365-524	NUT	6	
	AN960D516	WASHER	18	
		———*———		
-3	AN996-30	. RING, Lock (used with 22C1680-1)	1	
	AN381-3-16	. PIN, Cotter (used with 22C1680-2)	1	
-4	22C1680-2	. NUT, Bellcrank torque tube	1	
	or			
	22C1680-1	. NUT, Bellcrank torque tube	1	
	22C1679-1	. SUPPORT ASSEMBLY, Fwd upper controls bellcrank	1	
-5	22C1708-1	. . RETAINER	1	
		Attaching Parts		
-6	AN4-11A	. . BOLT	2	
	AN365-428C	. . NUT	2	
	AN960-416	. . WASHER	2	
	AN960-416L	. . WASHER	2	
		———*———		
-7	AN202KP29B	. . BEARING	1	
-8	22C1679-3	. . SUPPORT	1	
-9	22C1753-25	. SPACER	1	
-10	22C1671-4	. LINK ASSEMBLY, Lateral and longitudinal differential	2	J,IH
	or			
	22C1671-1	. LINK ASSEMBLY, Lateral and longitudinal differential	2	J,IH
	42C1671-1	. LINK ASSEMBLY, Lateral and longitudinal differential	2	II
		Attaching Parts		
-11	42C1655-1	. BOLT (Used with 22C1670-2)	1	J,ED
	NAS464-4-23	. BOLT (Used with 22C1670-2)	1	EG,JY
	42C1655-3	. BOLT (Used with 22C1670-3)	1	J,ED
	NAS464-4-29	. BOLT (Used with 22C1670-3)	1	EG,JY
	AN176-26	. BOLT (Used with 42C1760-1)	1	II
-12	42C1655-2	. BOLT	2	J,ED
	NAS464-4-26	. BOLT	2	EG,JY
	AN176-27	. BOLT (Used with 42C1760-1)	2	II
-13	42C1655-3	. BOLT	1	J,ED
	or			
	NAS464-4-29	. BOLT	1	EG,JY
	AN176-30	. BOLT (Used with 42C1760-1)	1	II
	AN381-2-10	. PIN, Cotter	4	J,IH
	AN381-3-12	. PIN, Cotter	4	II
	AN310-4	. NUT	4	J,IH
	AN310-6	. NUT	4	II
	AN960-416	. WASHER	11	J,IH
	AN960-616	. WASHER	8	II
		———*———		
-14	AN207DP4	. . BEARING	2	J,IH
-15	22C1671-5	. . LINK (Used with 22C1671-4)	1	J,IH
	22C1671-2	. . LINK (Used with 22C1671-1)	1	J,IH
	22C1671-7	. . LINK (Alternate)	1	J,IH
-16	3C2138-7	. RETAINER	4	
-17	B544	. BEARING (FAF)	4	
	22C1676-5	. BELLCRANK ASSEMBLY, Upper lateral	1	J,IH
	or			
	22C1676-3	. BELLCRANK ASSEMBLY, Upper lateral	1	J,IH
	or			
	22C1676-1	. BELLCRANK ASSEMBLY, Upper lateral	1	J,IH

Figure and Index Number	Part Number	Description 1 2 3 4 5 6 7	Units per Assembly	Usable On Code
65-	42C1780-2	. BELLCRANK ASSEMBLY, Upper lateral	1	II
-18	42C1622-2	. . SPACER (Used with 22C1676-3, -5, and 42C1780-2)	2	
	22C1622-4	. . BUSHING (Used with 22C1676-1)	2	J,IH
-19	NAS75-4-018	. . BUSHING (Used with 22C1676-5)	1	J,IH
	NAS75-4-012	. . BUSHING (Used with 22C1676-1 and -3)	1	J,IH
	NAS77-6-48	. . BUSHING (Used with 42C1780-2)	1	II
-20	NAS77-4-38	. . BUSHING (Used with 22C1676-5)	1	J,IH
	NAS77-4-25	. . BUSHING (Used with 22C1676-3)	1	J,IH
	NAS75-4-012	. . BUSHING (Used with 22C1676-1)	1	J,IH
	NAS75-6-023	. . BUSHING (Used with 42C1780-2)	1	II
	NAS77-5-70	. . BUSHING (Used with 42C1780-2)	1	II
	NAS75-5-029	. . BUSHING (Used with 42C1780-2)	1	II
-21	NAS77-4-24	. . BUSHING (Used with 22C1676-5)	1	J,IH
	NAS77-4-20	. . BUSHING (Used with 22C1676-3)	1	J,IH
	NAS75-4-013	. . BUSHING (Used with 22C1676-1)	1	J,IH
	NAS75-4-019	. . BUSHING (Used with 42C1780-2)	1	II
-22	NAS75-4-016	. . BUSHING (Used with 22C1676-5)	1	J,IH
	NAS75-4-015	. . BUSHING (Used with 22C1676-3)	1	J,IH
	NAS75-4-012	. . BUSHING (Used with 22C1676-1)	1	J,IH
	NAS77-4-34	. . BUSHING (Used with 42C1780-2)	1	II
-23	MS15002-1	. . FITTING, Lubricator	1	
-24	22C1676-6	. . BELLCRANK (Used with 22C1676-5)	1	J,IH
	22C1676-4	. . BELLCRANK (Used with 22C1676-3)	1	J,IH
	22C1676-2	. . BELLCRANK (Used with 22C1676-1)	1	J,IH
	42C1780-4	. . BELLCRANK (Used with 42C1780-2)	1	II
-25	22C1753-7	. SPACER	1	
	22C1693-3	. BELLCRANK ASSEMBLY, Upper collective pitch	2	
	or			
	22C1693-1	. BELLCRANK ASSEMBLY, Upper collective pitch	2	
		Attaching Parts		
-26	AN386-4-22A	. PIN, Taper (used with 22C1693-3)	2	
	AN386-3-21A	. PIN, Taper (used with 22C1693-1)	2	
	AN364-524	. NUT (Used with 22C1693-3)	2	
	AN364-428	. NUT (Used with 22C1693-1)	2	
	AN975-5	. WASHER (Used with 22C1693-3)	2	
	AN975-4	. WASHER (Used with 22C1693-1)	2	
		———*———		
-27	NAS75-10-027	. . BUSHING (Used with 22C1693-3)	1	
	NAS75-10-019	. . BUSHING (Used with 22C1693-1)	1	
-28	NAS75-10-013	. . BUSHING	1	
-29	22C1693-4	. . BELLCRANK (Used with 22C1693-3)	1	
	22C1693-2	. . BELLCRANK (Used with 22C1693-1)	1	
	22C1673-6	. BELLCRANK ASSEMBLY, Fwd lateral differential	1	J,IH
	or			
	22C1673-2	. BELLCRANK ASSEMBLY, Fwd lateral differential	1	J,IH
	42C1673-2	. BELLCRANK ASSEMBLY, Fwd lateral differential	1	II
		Attaching Parts		
-30	22C1685-2	. BOLT (Used with 22C1670-3 and 42C1760-1)	1	
	22C1685-1	. BOLT (Used with 22C1670-2)	1	
	AN381-2-10	. PIN, Cotter	1	
	AN320-4	. NUT	1	
	AN960-416	. WASHER	1	
-31	22C1688-1	. WASHER	1	
	AN960-1016	. WASHER	1	
		———*———		
-32	AN201KP10A	. . BEARING	2	
-33	22C1622-5	. . BUSHING (Used with 22C1673-2)	2	J,IH
-34	22C1753-14	. . SPACER	1	J,IH
-35	NAS77-5-31	. . BUSHING (Used with 22C1673-6)	1	J,IH
	NAS75-5-014	. . BUSHING (Used with 22C1673-2)	1	J,IH
	NAS77-6-59	. . BUSHING (Used with 42C1673-2)	1	II
-36	NAS75-5-015	. . BUSHING (Used with 22C1673-6)	1	J,IH

Figure and Index Number	Part Number	Description 1 2 3 4 5 6 7	Units per Assembly	Usable On Code
65-	NAS75-5-013	. . BUSHING (Used with 22C1673-2)	1	J,IH
	NAS75-6-026	. . BUSHING (Used with 42C1673-2)	1	II
-37	NAS77-4-32	. . BUSHING (Used with 22C1673-6)	1	J,IH
	NAS75-4-015	. . BUSHING (Used with 22C1673-2)	1	J,IH
	NAS75-5-025	. . BUSHING (Used with 42C1673-2)	1	II
-38	NAS75-4-016	. . BUSHING (Used with 22C1673-6)	1	J,IH
	NAS75-4-015	. . BUSHING (Used with 22C1673-2)	1	J,IH
	NAS77-5-59	. . BUSHING (Used with 42C1673-2)	1	II
-39	22C1673-8	. . BELLCRANK (Used with 22C1673-6)	1	J,IH
	22C1673-4	. . BELLCRANK (Used with 22C1673-2)	1	J,IH
	42C1673-4	. . BELLCRANK (Used with 42C1673-2)	1	II
-40	22C1692-12	. ARM ASSEMBLY, Fwd upper controls collective pitch	1	J,IH
	or			
	22C1692-8	. ARM ASSEMBLY, Fwd upper controls collective pitch	1	J,IH
	or			
	22C1692-2	. ARM ASSEMBLY, Fwd upper controls collective pitch	1	J,IH
	42C1784-1	. ARM ASSEMBLY, Fwd upper controls collective pitch	1	II
		Attaching Parts		
-41	AN386-4-17A	. PIN, Taper (used with 22C1692-12 and 42C1784-1)	2	
	AN386-3-16A	. PIN, Taper (used with 22C1692-2 and -8)	2	J,IH
	AN364-524	. NUT (Used with 22C1692-12 and 42C1784-1)	2	
	AN364-428	. NUT (Used with 22C1692-2 and -8)	2	J,IH
	AN975-5	. WASHER (Used with 22C1692-12 and 42C1784-1)	2	
	AN975-4	. WASHER (Used with 22C1692-2 and -8)	2	J,IH
		———*———		
-42	NAS77-4-17	. . BUSHING (Used with 22C1692-8, -12, and 42C1784-1)	1	
	NAS75-4-009	. . BUSHING (Used with 22C1692-2)	1	J,IH
-43	NAS75-4-011	. . BUSHING (Used with 22C1692-8, -12, and 42C1784-1)	1	II
	NAS75-4-009	. . BUSHING (Used with 22C1692-2)	1	J,IH
	NAS75-5-012	. . BUSHING (Used with 42C1784-1)	1	II
	NAS77-5-18	. . BUSHING (Used with 42C1784-1)	1	J,IH
	22C1679-2	. SUPPORT ASSEMBLY, Fwd upper controls bellcrank	1	
-44	22C1708-1	. . RETAINER	1	
		Attaching Parts		
-45	AN4-11A	. . BOLT	2	
	AN365-428C	. . NUT	2	
	AN960-416	. . WASHER	2	
	AN960-416L	. . WASHER	2	
		———*———		
-46	AN202KP29A	. . BEARING	1	
-47	22C1679-4	. . SUPPORT	1	
-48	22C1753-36	. SPACER	1	
		Attaching Parts		
-49	AN386-2-16A	. PIN, Taper	1	
	AN364-1032	. NUT	1	
	AN975-3	. WASHER	1	
		———*———		
	22C1683-5	. BELLCRANK ASSEMBLY, Fwd upper longitudinal	1	J,IH
	or			
	22C1683-3	. BELLCRANK ASSEMBLY, Fwd upper longitudinal	1	J,IH
	or			
	22C1683-1	. BELLCRANK ASSEMBLY, Fwd upper longitudinal	1	J,IH
	42C1782-1	. BELLCRANK ASSEMBLY, Fwd upper longitudinal	1	II
-50	42C1622-2	. . SPACER (Used with 22C1683-2, -5, and 42C1782-1)	2	
	22C1622-4	. . BUSHING (Used with 22C1683-1)	2	J,IH
-51	NAS77-4-42	. . BUSHING (Used with 22C1683-3 and -5)	1	J,IH
	NAS75-4-018	. . BUSHING (Used with 22C1683-1)	1	J,IH
	NAS77-6-54	. . BUSHING (Used with 42C1782-1)	1	II
-52	NAS75-4-019	. . BUSHING (Used with 22C1683-3 and -5)	1	J,IH
	NAS75-4-018	. . BUSHING (Used with 22C1683-1)	1	J,IH
	NAS75-6-025	. . BUSHING (Used with 42C1782-1)	1	II
-53	NAS77-4-23	. . BUSHING (Used with 22C1683-3 and -5)	1	J,IH

Figure and Index Number	Part Number	Description 1 2 3 4 5 6 7	Units per Assembly	Usable On Code
65-	NAS75-4-23	. . BUSHING (Used with 22C1683-1)	1	J,IH
	NAS77-4-34	. . BUSHING (Used with 42C1782-1)	1	II
-54	NAS75-4-015	. . BUSHING (Used with 22C1683-3 and -5)	1	J,IH
	NAS75-4-012	. . BUSHING (Used with 22C1683-1)	1	J,IH
	NAS75-4-019	. . BUSHING (Used with 42C1782-1)	1	II
-55	MS15002-1	. . FITTING, Lubricator	1	
-56	22C1683-6	. . BELLCRANK (Used with 22C1683-5)	1	J,IH
	22C1683-4	. . BELLCRANK (Used with 22C1683-3)	1	J,IH
	22C1683-2	. . BELLCRANK (Used with 22C1683-1)	1	J,IH
	42C1782-2	. . BELLCRANK (Used with 42C1782-1)	1	II
	22C1672-10	. BELLCRANK ASSEMBLY, Fwd longitudinal differential	1	J,IH
	or			
	22C1672-6	. BELLCRANK ASSEMBLY, Fwd longitudinal differential	1	J,IH
	or			
	22C1672-2	. BELLCRANK ASSEMBLY, Fwd longitudinal differential	1	J,IH
	42C1672-2	. BELLCRANK ASSEMBLY, Fwd longitudinal differential	1	II
		Attaching Parts		
-57	22C1685-2	. BOLT (Used with 22C1672-10 and 42C1672-2)	1	
	22C1685-1	. BOLT (Used with 22C1672-2 and -6)	1	J,IH
	AN381-2-10	. PIN, Cotter	1	
	AN320-4	. NUT	1	
	AN960-416	. WASHER	1	
-58	22C1688-1	. WASHER	1	
	AN960-1016	. WASHER	1	
		———*———		
-59	AN201KP10A	. . BEARING	2	
-60	22C1622-5	. . BUSHING (Used with 22C1672-2)	2	J,IH
-61	22C1753-14	. . SPACER	1	J,IH
-62	NAS77-4-31	. . BUSHING (Used with 22C1672-6 and -10)	1	J,IH
	NAS75-4-014	. . BUSHING (Used with 22C1672-2)	1	J,IH
	NAS75-4-019	. . BUSHING (Used with 42C1672-2)	1	II
-63	NAS75-4-015	. . BUSHING (Used with 22C1672-6 and -10)	1	J,IH
	NAS75-4-013	. . BUSHING (Used with 22C1672-2)	1	J,IH
	NAS77-4-34	. . BUSHING (Used with 42C1672-2)	1	II
-64	NAS77-4-33	. . BUSHING (Used with 22C1672-6 and -10)	1	J,IH
	NAS75-4-015	. . BUSHING (Used with 22C1672-2)	1	J,IH
	NAS77-6-54	. . BUSHING (Used with 42C1672-2)	1	II
-65	NAS75-4-016	. . BUSHING (Used with 22C1672-6 and -10)	1	J,IH
	NAS75-4-015	. . BUSHING (Used with 22C1672-2)	1	J,IH
	NAS75-6-025	. . BUSHING (Used with 42C1672-2)	1	II
-66	22C1672-12	. . BELLCRANK (Used with 22C1672-10)	1	J,IH
	22C1672-8	. . BELLCRANK (Used with 22C1672-6)	1	J,IH
	22C1672-4	. . BELLCRANK (Used with 22C1672-2)	1	J,IH
	42C1672-4	. . BELLCRANK (Used with 42C1672-2)	1	II
-67	22C1678-1	. TUBE, Torque	1	
-68	22C1719	LINK ASSEMBLY, Lateral, see fig. 64*	Ref	
		Attaching Parts		
-69	AN175-20	BOLT	1	J,IH
	AN175-25	BOLT	1	II
-69A	AN175-21	BOLT	1	
	AN381-2-10	PIN, Cotter	1	
	AN381-2-8	PIN, Cotter	1	
	AN310-5	NUT	2	
	AN960-516	WASHER	2	
	AN960-516L	WASHER	1	
		———*———		
-70	22C1682	LINK ASSEMBLY, Longitudinal, see fig. 64*	Ref	
		Attaching Parts		
-71	AN174-17	BOLT	1	J,IH
	AN174-21	BOLT	1	II
	AN381-2-10	PIN, Cotter	1	

*For proper usable on codes and complete breakdown, see figure number as indicated.

Figure and Index Number	Part Number	Description 1 2 3 4 5 6 7	Units per Assembly	Usable On Code
65-	AN310-4	NUT	1	
	AN960-416	WASHER	1	
	AN960-416L	WASHER	1	
		———*———		
-72	22C1696	ROD ASSEMBLY, Lateral, see fig. 64*	Ref	
-73	22C1696	ROD ASSEMBLY, Collective pitch, see fig. 64*	Ref	
-74	22C1696	ROD ASSEMBLY, Longitudinal, see fig. 64*	Ref	
		Attaching Parts		
-75	AN174-17	BOLT	2	J,IH
	AN174-21	BOLT	2	II
-76	AN174-15	BOLT	1	
	AN381-2-10	PIN, Cotter	3	
	AN310-4	NUT	3	
	AN960-416	WASHER	1	
-77	AN960-416L	WASHER	1	
		———*———		
	22C1670-4	BELLCRANK ASSEMBLY, Fwd upper controls, see fig. 65A (special spare parts assembly)	Ref	
	22C1670-100	BELLCRANK ASSEMBLY, Fwd upper controls, see fig. 65A (special spare parts assembly)	Ref	

*For proper usable on codes and complete breakdown, see figure number as indicated.

Controls

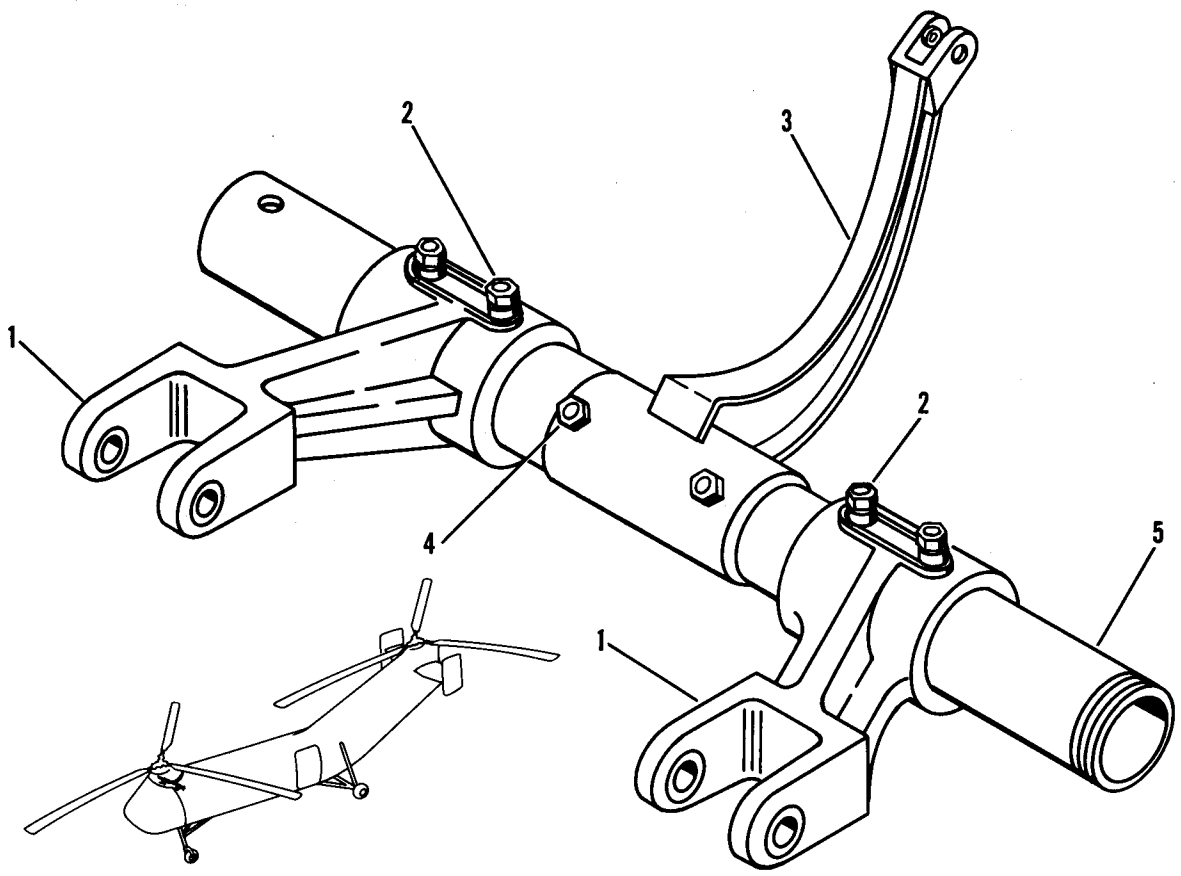

Figure 65A. Forward Upper Controls Bellcrank Assembly (Special Spare Parts Assembly)

Figure and Index Number	Part Number	1 2 3 4 5 6 7 Description	Units per Assembly	Usable On Code
65A-	22C1670-100 or	BELLCRANK ASSEMBLY, Fwd upper controls (special spare parts assy)	1	C
	22C1670-4	BELLCRANK ASSEMBLY, Fwd upper controls (special spare parts assy)	1	C
-1	22C1693-3 or	. BELLCRANK ASSEMBLY (Used with 22C1670-100)	2	C
	22C1693-1	. BELLCRANK ASSEMBLY (Used with 22C1670-4)	2	C
		Attaching Parts		
-2	AN386-4-22A	. PIN, Taper (used with 22C1693-3)	2	C
	AN386-3-21A	. PIN, Taper (used with 22C1693-1)	2	C
	AN364-524	. NUT (Used with 22C1693-3)	2	C
	AN364-428	. NUT (Used with 22C1693-1)	2	C
	AN975-5	. WASHER (Used with 22C1693-3)	2	C
	AN975-4	. WASHER (Used with 22C1693-1)	2	C
		*----------		
-3	22C1692-12 or	. ARM ASSEMBLY (Used with 22C1670-100)	1	C
	22C1692-8 or	. ARM ASSEMBLY (Used with 22C1670-4)	1	C
	22C1692-2	. ARM ASSEMBLY (Used with 22C1670-4)	1	C

Figure and Index Number	Part Number	1 2 3 4 5 6 7 Description	Units per Assembly	Usable On Code
65A-		*Attaching Parts*		
-4	AN386-4-17A	. PIN, Taper (used with 22C1692-12)	2	C
	AN386-3-16A	. PIN, Taper (used with 22C1692-2 and -8)	2	C
	AN364-524	. NUT (Used with 22C1692-12)	2	C
	AN364-428	. NUT (Used with 22C1692-2 and -8)	2	C
	AN975-5	. WASHER (Used with 22C1692-12)	2	C
	AN975-4	. WASHER (Used with 22C1692-2 and -8)	2	C
		———*———		
-5	22C1678-1	. TUBE, Torque	1	C

Controls

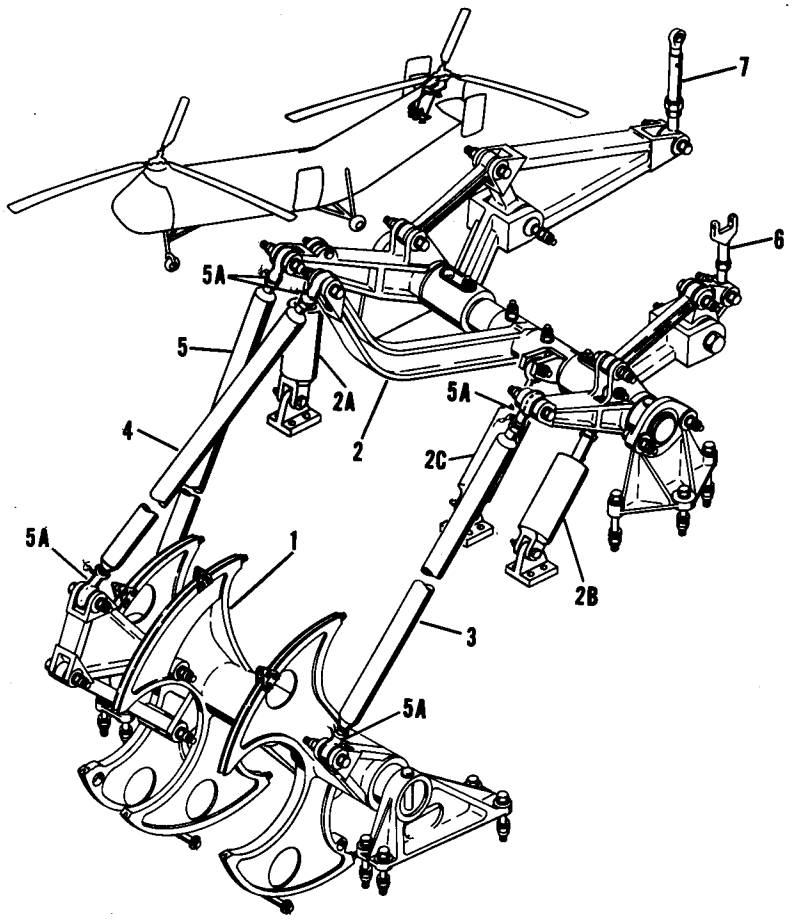

Figure 66. Aft Upper Controls

Figure and Index Number	Part Number	Description 1 2 3 4 5 6 7	Units per Assembly	Usable On Code
66-	22C1004-1	CONTROLS INSTALLATION, Aft upper	1	J,IH
	42C1004-1	CONTROLS INSTALLATION, Aft upper	1	II
-1	22C1700	. QUADRANT ASSEMBLY, Aft upper controls, see fig. 66A*	Ref	
-2	22C1730	. BELLCRANK ASSEMBLY, Aft upper controls, see fig. 66B*	Ref	
	42C1770-1	. BELLCRANK ASSEMBLY, Aft upper controls, see fig. 66B	Ref	
-2A	42E7089-1	. DAMPER ASSEMBLY, Longitudinal hydraulic	1	II
-2B	42E7089-2	. DAMPER ASSEMBLY, Lateral hydraulic	1	II
-2C	42E7089-4	. DAMPER ASSEMBLY, Collective pitch hydraulic	1	II
		Attaching Parts		
	AN175-24	. BOLT	1	II
	AN174-25	. BOLT (Used with 42E7089-1)	1	II
	AN175-31	. BOLT (Used with 42E7089-2)	1	II
	AN175-21	. BOLT (Used with 42E7089-4)	1	II
	AN381-2-10	. PIN, Cotter	2	II
	AN310-5	. NUT	1	II

*For proper usable on codes and complete breakdown, see figure number as indicated.

Figure and Index Number	Part Number	Description 1 2 3 4 5 6 7	Units per Assembly	Usable On Code
66-	AN310-4	. NUT (Used with 42E7089-1)	1	
	AN310-5	. NUT (Used with 42E7089-2 and -4)	1	II
	AN960-416	. WASHER (Used with 42E7089-1)	1	II
	AN960-416L	. WASHER (Used with 42E7089-1)	1	II
	AN960-516	. WASHER	2	II
	AN960-516	. WASHER (Used with 42E7089-2 and -4)	1	II
	AN960-516L	. WASHER (Used with 42E7089-2 and -4)	1	II
		———*———		
	5527540	. . DAMPER ASSEMBLY, Hydraulic (DE) (used with 42E7089-1 and -2)	1	II
	5527541	. . DAMPER ASSEMBLY, Hydraulic (DE) (used with 42E7089-4)	1	II
	REP4M6	. . BEARING, Rod end (FAF) (used with 42E7089-1)	1	II
	REP5M6	. . BEARING, Rod end (FAF) (used with 42E7089-2 and -4)	1	II
	NAS77-5-44	. . BUSHING	1	II
	NAS75-5-020	. . BUSHING	1	II
-3	22C1699-3	. ROD ASSEMBLY, Lateral	1	J
	22C1699-9	. ROD ASSEMBLY, Lateral	1	AU
-4	22C1699-1	. ROD ASSEMBLY, Collective pitch	1	J
	22C1699-7	. ROD ASSEMBLY, Collective pitch	1	AU
-5	22C1699-2	. ROD ASSEMBLY, Longitudinal	1	J
	22C1699-8	. ROD ASSEMBLY, Longitudinal	1	AU
	RE4M6	. . BEARING, Rod end (FAF)	2	
-5A	17R3065-12	. BOOT	6	
	or			
	17R3065-2	. BOOT	6	
-6	22C1719	. LINK ASSEMBLY, Lateral, see fig. 64*	Ref	
-7	22C1682	. LINK ASSEMBLY, Longitudinal, see fig. 64*	Ref	

*For proper usable on codes and complete breakdown, see figure number as indicated.

Controls

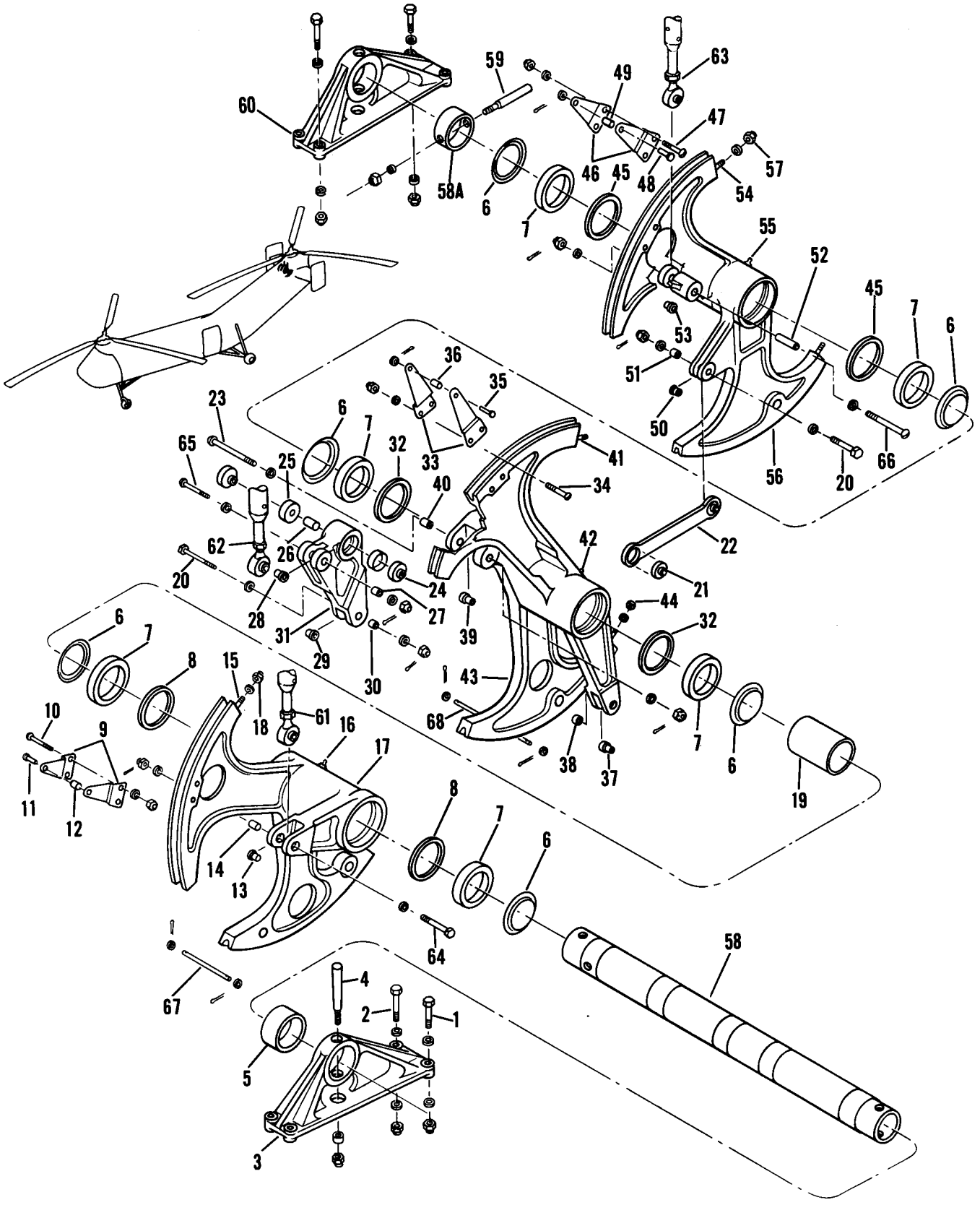

Figure 66A. Aft Upper Controls Quadrant Assembly

Figure and Index Number	Part Number	Description 1 2 3 4 5 6 7	Units per Assembly	Usable On Code
66A-	22C1700-2	QUADRANT ASSEMBLY, Aft upper controls	1	
	or			
	22C1700-1	QUADRANT ASSEMBLY, Aft upper controls	1	
		Attaching Parts		
-1	AN4-15A	BOLT	4	
-2	AN4-13A	BOLT	4	
	AN365-428	NUT	8	
	AN960D416	WASHER	8	
	AN960D416L	WASHER	8	
		———*———		
-3	22C1706-1	. MOUNT, Shaft LH	1	
		Attaching Parts		
-4	AN386-1-20A	. PIN, Taper	1	
	AN364-1032	. NUT	1	
	AN975-3	. WASHER	1	
		———*———		
-5	22C1753-32	. SPACER	1	
-6	3C2138-7	. RETAINER, Grease	6	
-7	B544	. BEARING (FAF)	6	
	22C1703-9	. QUADRANT ASSEMBLY, Aft lateral	1	
	or			
	22C1703-6	. QUADRANT ASSEMBLY, Aft lateral	1	
	or			
	22C1703-2	. QUADRANT ASSEMBLY, Aft lateral	1	
-8	42C1622-2	. . SPACER (Used with 22C1703-6 and -9)	2	
	22C1622-4	. . SPACER (Used with 22C1703-2)	2	
-9	22C1684-1	. . PLATE	2	
		Attaching Parts		
-10	AN23-18A	. . BOLT	2	
-11	AN393-15	. . PIN, Flat hd	1	
	AN364-1032	. . NUT	2	
	AN381-2-8	. . PIN, Cotter	1	
	AN960-10	. . WASHER	2	
	AN960-10L	. . WASHER	1	
		———*———		
-12	22C1753-15	. . SPACER	1	
-13	NAS77-4-30	. . BUSHING (Used with 22C1703-10)	1	
	NAS77-4-23	. . BUSHING (Used with 22C1703-8)	1	
	NAS75-4-012	. . BUSHING (Used with 22C1703-4)	1	
-14	NAS75-4-015	. . BUSHING (Used with 22C1703-8 and -10)	1	
	NAS75-4-013	. . BUSHING (Used with 22C1703-4)	1	
-15	AN150520	. . STUD	2	
	AN150521	. . STUD (0.003 in. oversize)	AR	
■ -16	MS15002-1	. . FITTING, Lubricator	1	
-17	22C1703-10	. . QUADRANT (Used with 22C1703-9)	1	
	22C1703-8	. . QUADRANT (Used with 22C1703-6)	1	
	22C1703-4	. . QUADRANT (Used with 22C1703-2)	1	
-18	AN364-1032	. NUT	2	
	AN960D10	. WASHER	2	
-19	22C1753-65	. SPACER	1	
	17C1665-5	. LINK ASSEMBLY, Lateral and longitudinal differential	1	
		Attaching Parts		
-20	AN174-16	. BOLT	2	
	or			
	AN174-15	. BOLT	2	
	AN381-2-12	. PIN, Cotter	2	
	AN310-4	. NUT	2	
	AN960-416	. WASHER	4	
		———*———		
-21	AN200KS4	. . BEARING	2	
-22	17C1665-6	. . LINK	1	

Figure and Index Number	Part Number	1 2 3 4 5 6 7 Description	Units per Assembly	Usable On Code
66A-	22C1655-3	. BELLCRANK ASSEMBLY, Differential collective pitch	1	
	or			
	22C1655-1	. BELLCRANK ASSEMBLY, Differential collective pitch	1	
		Attaching Parts		
-23	AN24-42	. BOLT	1	
	AN381-2-12	. PIN, Cotter	1	
	AN320-4	. NUT	1	
	AN960D416	. WASHER	1	
	AN960D416L	. WASHER	1	
		———*———		
-24	AN200KP4	. . BEARING	2	
-25	22C1622-1	. . BUSHING (Used with 22C1655-2)	2	
-26	22C1753-8	. . SPACER	1	
-27	NAS75-4-011	. . BUSHING (Used with 22C1655-4)	1	
-28	NAS77-4-14	. . BUSHING (Used with 22C1655-4)	1	
	NAS75-4-009	. . BUSHING (Used with 22C1655-2)	2	
-29	NAS77-4-26	. . BUSHING (Used with 22C1655-4)	1	
-30	NAS75-4-013	. . BUSHING (Used with 22C1655-4)	1	
	NAS75-4-011	. . BUSHING (Used with 22C1655-2)	2	
-31	22C1655-4	. . BELLCRANK (Used with 22C1655-3)	1	
	22C1655-2	. . BELLCRANK (Used with 22C1655-1)	1	
	22C1701-3	. QUADRANT ASSEMBLY, Collective pitch	1	
	or			
	22C1701-1	. QUADRANT ASSEMBLY, Collective pitch	1	
-32	42C1622-2	. . SPACER (Used with 22C1701-3)	2	
	22C1622-4	. . BUSHING (Used with 22C1701-1)	2	
-33	22C1684-2	. . PLATE	2	
		Attaching Parts		
-34	AN23-18A	. . BOLT	2	
-35	AN393-15	. . PIN, Flat hd	1	
	AN364-1032	. . NUT	2	
	AN381-2-8	. . PIN, Cotter	1	
	AN960-10	. . WASHER	2	
	AN960-10L	. . WASHER	1	
		———*———		
-36	22C1753-15	. . SPACER	1	
-37	NAS77-4-16	. . BUSHING (Used with 22C1701-4)	1	
	NAS75-4-010	. . BUSHING (Used with 22C1701-2)	1	
-38	NAS75-4-011	. . BUSHING (Used with 22C1701-4)	1	
	NAS75-4-009	. . BUSHING (Used with 22C1701-2)	1	
-39	NAS77-4-48	. . BUSHING (Used with 22C1701-4)	1	
	NAS75-4-020	. . BUSHING (Used with 22C1701-2)	1	
-40	NAS75-4-011	. . BUSHING (Used with 22C1701-4)	1	
	NAS75-4-009	. . BUSHING (Used with 22C1701-2)	1	
-41	AN150520	. . STUD	2	
	AN150521	. . STUD (0.003 in. oversize)	AR	
-42	MS15002-1	. . FITTING, Lubricator	1	
-43	22C1701-4	. . QUADRANT (Used with 22C1701-3)	1	
	22C1701-2	. . QUADRANT (Used with 22C1701-1)	1	
-44	AN364-1032	. NUT	2	
	AN960D10	. WASHER	2	
	22C1702-3	. QUADRANT ASSEMBLY, Longitudinal	1	
	or			
	22C1702-1	. QUADRANT ASSEMBLY, Longitudinal	1	
-45	42C1622-2	. . SPACER (Used with 22C1702-3)	2	
	22C1622-4	. . BUSHING (Used with 22C1702-1)	2	
-46	22C1684-1	. . PLATE	2	
		Attaching Parts		
-47	AN23-18A	. . BOLT	2	
-48	AN393-15	. . PIN, Flat hd	1	
	AN364-1032	. . NUT	2	

Figure and Index Number	Part Number	Description 1 2 3 4 5 6 7	Units per Assembly	Usable On Code
66A-	AN381-2-8	. . PIN, Cotter	1	
	AN960-10	. . WASHER	2	
	AN960-10L	. . WASHER	1	
		———*———		
-49	22C1753-15	. . SPACER	1	
-50	NAS77-4-22	. . BUSHING (Used with 22C1702-4)	1	
	NAS75-4-012	. . BUSHING (Used with 22C1702-2)	1	
-51	NAS75-4-013	. . BUSHING (Used with 22C1702-4)	1	
	NAS75-4-011	. . BUSHING (Used with 22C1702-2)	1	
-52	NAS75-4-121	. . BUSHING (Used with 22C1702-4)	1	
	NAS75-4-118	. . BUSHING (Used with 22C1702-2)	1	
-53	NAS77-4-28	. . BUSHING (Used with 22C1702-4)	1	
	NAS75-4-015	. . BUSHING (Used with 22C1702-2)	1	
-54	AN150520	. . STUD	2	
	AN150521	. . STUD (0.003 in. oversize)	AR	
■ -55	MS15002-1	. . FITTING, Lubricator	1	
-56	22C1702-4	. . QUADRANT (Used with 22C1702-3)	1	
	22C1702-2	. . QUADRANT (Used with 22C1702-1)	1	
-57	AN364-1032	. NUT	2	
	AN960D10	. WASHER	2	
-58	22C1705-1	. SHAFT, Aft upper quadrant	1	
-58A	22C1753-35	. SPACER	1	
		Attaching Parts		
-59	AN386-1-16A	. PIN, Taper	1	
	AN364-1032	. NUT	1	
	AN975-3	. WASHER	1	
		———*———		
-60	22C1706-2	. MOUNT, Shaft RH	1	
-61	22C1699	ROD ASSEMBLY, Lateral, see fig. 66*	Ref	
-62	22C1699	ROD ASSEMBLY, Collective pitch, see fig. 66*	Ref	
-63	22C1699	ROD ASSEMBLY, Longitudinal, see fig. 66*	Ref	
		Attaching Parts		
-64	AN24-27	BOLT	1	J,DP
	AN24-29	BOLT	1	DQ
-65	AN24-25	BOLT	1	
-66	AN24-48	BOLT	1	
	AN381-2-10	PIN, Cotter	3	
	AN310-4	NUT	3	
	AN960-416	WASHER	5	
	AN960-416L	WASHER	1	
		———*———		
-67	22C1713-1	PIN, Cable guard	1	
-68	22C1713-2	PIN, Cable guard	1	
		Attaching Parts		
	AN381-2-8	PIN, Cotter	2	
	AN960D10L	WASHER	2	
		———*———		

*For proper usable on codes and complete breakdown, see figure number as indicated.

Controls

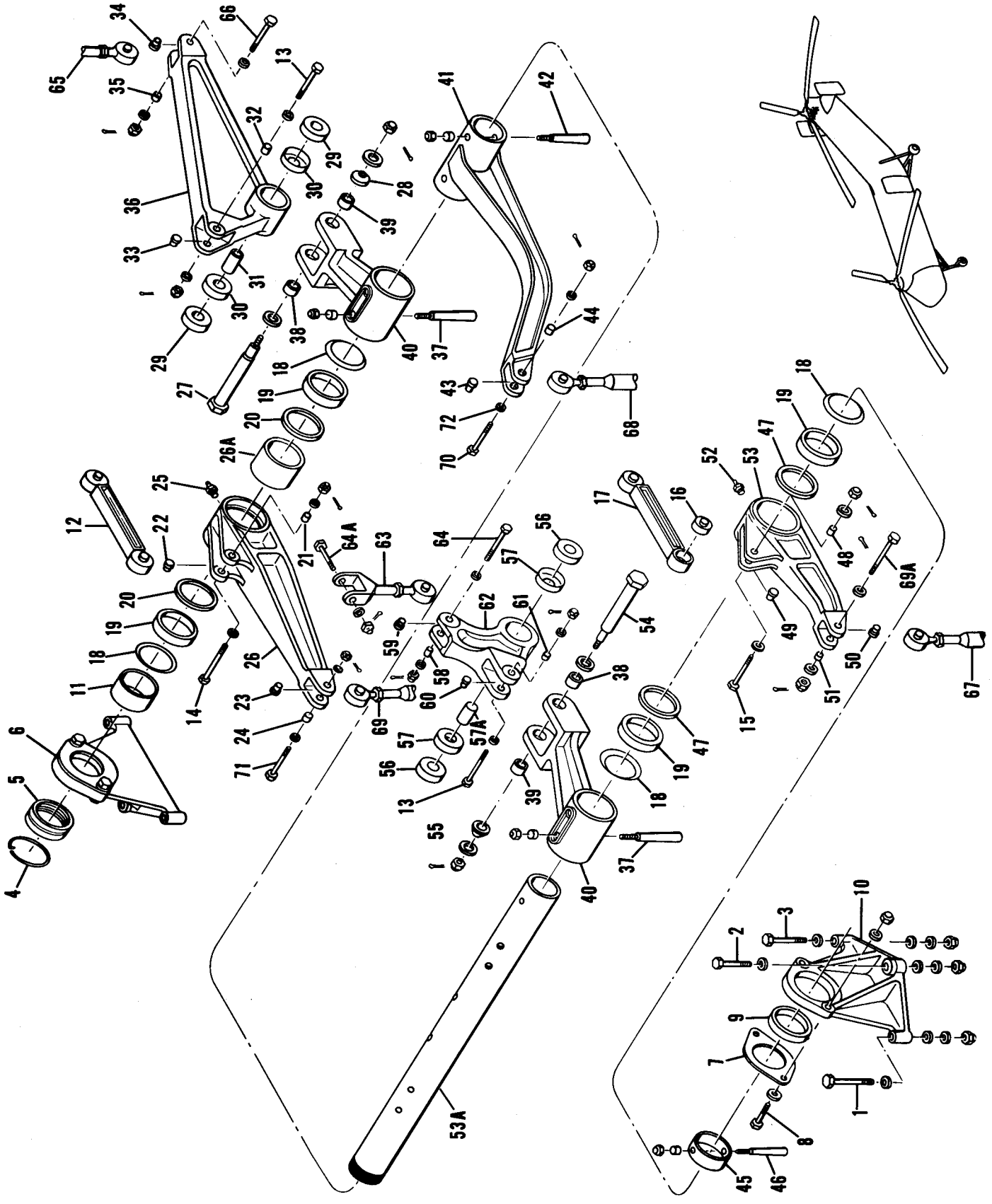

Figure 66B. Aft Upper Controls Bellcrank Assembly

Figure and Index Number	Part Number	Description 1 2 3 4 5 6 7	Units per Assembly	Usable On Code
66B-	22C1730-3	BELLCRANK ASSEMBLY, Aft upper controls	1	J,IH
	or			
	22C1730-2	BELLCRANK ASSEMBLY, Aft upper controls	1	J,IH
	42C1770-1	BELLCRANK ASSEMBLY, Aft upper controls	1	II
		Attaching Parts		
-1	AN4-27A	BOLT (Used with 22C1730-2)	2	
	AN5-27A	BOLT (Used with 22C1730-3 and 42C1770-1)	2	
-2	AN4-14A	BOLT	2	
-3	AN4-24A	BOLT	2	
	AN365-428	NUT	6	
	AN365-524	NUT (Used with 22C1703-3 and 42C1770-1)	2	
	AN960-416	WASHER (Used with 22C1730-2 and -3)	12	J,IH
	AN960D416	WASHER (Used with 42C1770-1)	10	II
	AN960D416L	WASHER (Used with 42C1770-1)	2	II
	AN960-516	WASHER (Used with 22C1730-3)	6	J,IH
	AN960D516	WASHER (Used with 42C1770-1)	6	II
		———*———		
-4	AN996-30	. RING, Lock (Used with 22C1680-1)	1	
	AN381-3-16	. PIN, Cotter (Used with 22C1680-2)	1	
-5	22C1680-2	. NUT, Bellcrank torque tube	1	
	or			
	22C1680-1	. NUT, Bellcrank torque tube	1	
-6	22C1707-1	. SUPPORT ASSEMBLY, Aft upper controls bellcrank (used with 22C1730-2)	2	J,IH
	22C1707-5	. SUPPORT ASSEMBLY, Aft upper controls bellcrank (used with 22C1730-3 and 42C1770-1)	1	
	22C1707-6	. SUPPORT ASSEMBLY, Aft upper controls bellcrank (used with 22C1730-3 and 42C1770-1)	1	
-7	22C1708-1	. . RETAINER	1	
		Attaching Parts		
-8	AN4-11A	. . BOLT	2	
	AN365-428C	. . NUT	2	
	AN960D416L	. . WASHER	4	
		———*———		
-9	AN202KP29B	. . BEARING	1	
-10	22C1707-4	. . SUPPORT (Used with 22C1707-6)	1	
	22C1707-3	. . SUPPORT (Used with 22C1707-5)	1	
	22C1707-2	. . SUPPORT (Used with 22C1707-1)	1	
-11	22C1753-25	. SPACER	1	
-12	22C1671-4	. LINK ASSEMBLY, Lateral and longitudinal differential	2	J,IH
	or			
	22C1671-1	. LINK ASSEMBLY, Lateral and longitudinal differential	2	J,IH
	42C1671-1	. LINK ASSEMBLY, Lateral and longitudinal differential	2	II
		Attaching Parts		
-13	42C1655-2	. BOLT	2	J,IH
	or			
	NAS464-4-26	. BOLT	2	J,IH
	AN176-27	. BOLT	2	II
-14	42C1655-3	. BOLT	1	J,IH
	or			
	NAS464-4-29	. BOLT	1	J,IH
	AN176-26	. BOLT	1	II
-15	42C1655-1	. BOLT (Used with 22C1730-2)	1	J,IH
	or			
	NAS464-4-23	. BOLT (Used with 22C1730-2)	1	J,IH
	42C1655-3	. BOLT (Used with 22C1730-3)	1	J,IH
	or			
	NAS464-4-29	. BOLT (Used with 22C1730-3)	1	J,IH
	AN176-30	. BOLT	1	II
	AN381-2-10	. PIN, Cotter	4	J,IH

Figure and Index Number	Part Number	Description 1 2 3 4 5 6 7	Units per Assembly	Usable On Code
66B-	AN381-3-12	. PIN, Cotter	4	II
	AN310-4	. NUT	4	J,IH
	AN310-6	. NUT	4	II
	AN960-416	. WASHER	8	J,IH
	AN960-616	. WASHER	8	II
		———*———		
-16	AN207DP4	. . BEARING	2	
-17	22C1671-5	. . LINK (Used with 22C1671-4)	1	
	22C1671-2	. . LINK (Used with 22C1671-1)	1	
	22C1671-7	. . LINK (Alternate)	1	J,IH
-18	3C2138-7	. RETAINER	4	
-19	B544	. BEARING (FAF)	4	
	22C1675-3	. BELLCRANK ASSEMBLY, Aft upper longitudinal	1	J,IH
	or			
	22C1675-1	. BELLCRANK ASSEMBLY, Aft upper longitudinal	1	J,IH
	42C1781-1	. BELLCRANK ASSEMBLY, Aft upper longitudinal	1	II
-20	42C1622-2	. . SPACER (Used with 22C1675-3)	2	J,IH
	22C1622-4	. . BUSHING (Used with 22C1675-2)	2	J,IH
-21	NAS75-4-019	. . BUSHING (Used with 22C1675-4)	1	J,IH
	NAS75-4-018	. . BUSHING (Used with 22C1675-2)	1	J,IH
	NAS75-6-025	. . BUSHING (Used with 42C1781-1)	1	II
-22	NAS77-4-42	. . BUSHING (Used with 22C1675-4)	1	J,IH
	NAS77-4-43	. . BUSHING (Used with 22C1675-2)	1	J,IH
	NAS77-6-54	. . BUSHING (Used with 42C1781-1)	1	II
-23	NAS77-4-23	. . BUSHING (Used with 22C1675-4)	1	J,IH
	NAS75-4-013	. . BUSHING (Used with 22C1675-2)	1	J,IH
	NAS77-4-34	. . BUSHING (Used with 42C1781-1)	1	II
-24	NAS75-4-015	. . BUSHING (Used with 22C1675-4)	1	J,IH
	NAS75-4-012	. . BUSHING (Used with 22C1675-2)	1	J,IH
	NAS75-4-019	. . BUSHING (Used with 42C1781-1)	1	II
	NAS77-4-62	. . BUSHING (Used with 42C1781-1)	1	II
	NAS75-4-027	. . BUSHING (Used with 42C1781-1)	1	II
-25	MS15002-1	. . FITTING, Lubricator	1	
-26	22C1675-4	. . BELLCRANK (Used with 22C1675-3)	1	J,IH
	22C1675-2	. . BELLCRANK (Used with 22C1675-1)	1	J,IH
	42C1781-2	. . BELLCRANK (Used with 42C1781-1)	1	II
-26A	22C1753-7	. SPACER	1	
	22C1672-9	. BELLCRANK ASSEMBLY, Aft longitudinal differential	1	J,IH
	or			
	22C1672-5	. BELLCRANK ASSEMBLY, Aft longitudinal differential	1	J,IH
	or			
	22C1672-1	. BELLCRANK ASSEMBLY, Aft longitudinal differential	1	J,IH
	42C1672-1	. BELLCRANK ASSEMBLY, Aft longitudinal differential	1	II
		Attaching Parts		
-27	22C1685-2	. BOLT (Used with 22C1672-9 and 42C1672-1)	2	
	22C1685-1	. BOLT (Used with 22C1672-1 and -5)	1	
	AN381-2-10	. PIN, Cotter	1	
	AN320-4	. NUT	1	
	AN960-416	. WASHER	1	
-28	22C1688-1	. WASHER	1	
	AN960-1016	. WASHER	1	
		———*———		
-29	AN201KP10A	. . BEARING	2	
-30	22C1622-5	. . BUSHING (Used with 22C1672-1)	2	J,IH
-31	22C1753-14	. . SPACER	1	J,IH
-32	NAS75-4-016	. . BUSHING (Used with 22C1672-5 and -9)	1	J,IH
	NAS75-4-015	. . BUSHING (Used with 22C1672-1)	1	J,IH
	NAS75-6-025	. . BUSHING	1	II
-33	NAS77-4-33	. . BUSHING (Used with 22C1672-5 and -9)	1	J,IH
	NAS75-4-015	. . BUSHING (Used with 22C1672-1)	1	J,IH
	NAS77-6-54	. . BUSHING	1	II
-34	NAS77-4-31	. . BUSHING (Used with 22C1672-5 and -9)	1	J,IH

Figure and Index Number	Part Number	Description 1 2 3 4 5 6 7	Units per Assembly	Usable On Code
66B-	NAS75-4-014	. . BUSHING (Used with 22C1672-1)	1	J,IH
	NAS75-4-019	. . BUSHING	1	II
-35	NAS75-4-015	. . BUSHING (Used with 22C1672-5 and -9)	1	J,IH
	NAS75-4-013	. . BUSHING (Used with 22C1672-1)	1	II
	NAS77-4-34	. . BUSHING	1	J,IH
-36	22C1672-11	. . BELLCRANK (Used with 22C1672-9)	1	J,IH
	22C1672-7	. . BELLCRANK (Used with 22C1672-5)	1	J,IH
	22C1672-3	. . BELLCRANK (Used with 22C1672-1)	1	II
	42C1672-3	. . BELLCRANK	1	
	22C1693-3	. BELLCRANK ASSEMBLY, Upper collective pitch	2	
	or			
	22C1693-1	. BELLCRANK ASSEMBLY, Upper collective pitch	2	
		Attaching Parts		
-37	AN386-4-22A	. PIN, Taper (used with 22C1693-3)	2	
	AN386-3-21A	. PIN, Taper (used with 22C1693-1)	2	
	AN364-524	. NUT (Used with 22C1693-3)	2	
	AN364-428	. NUT (Used with 22C1693-1)	2	
	AN975-5	. WASHER (Used with 22C1693-3)	2	
	AN975-4	. WASHER (Used with 22C1693-1)	2	
		———*———		
-38	NAS75-10-027	. . BUSHING (Used with 22C1693-3)	1	
	NAS75-10-019	. . BUSHING (Used with 22C1693-1)	1	
-39	NAS75-10-013	. . BUSHING	1	
-40	22C1693-4	. . BELLCRANK (Used with 22C1693-3)	1	
	22C1693-2	. . BELLCRANK (Used with 22C1693-1)	1	
-41	22C1692-11	. ARM ASSEMBLY, Aft upper controls collective pitch	1	J,IH
	or			
	22C1692-7	. ARM ASSEMBLY, Aft upper controls collective pitch	1	J,IH
	or			
	22C1692-1	. ARM ASSEMBLY, Aft upper controls collective pitch	1	J,IH
	42C1786-1	. ARM ASSEMBLY, Aft upper controls collective pitch	1	II
		Attaching Parts		
-42	AN386-4-17A	. PIN, Taper (used with 22C1692-11 and 42C1786-1)	2	J,IH
	AN386-3-16A	. PIN, Taper (used with 22C1692-1 and -7)	1	
	AN365-524	. NUT (Used with 22C1692-11 and 42C1786-1)	2	J,IH
	AN364-428	. NUT (Used with 22C1692-1 and -7)	1	
	AN975-5	. WASHER (Used with 22C1692-11 and 42C1786-1)	2	J,IH
	AN975-4	. WASHER (Used with 22C1692-1 and -7)	1	
		———*———		
-43	NAS77-4-17	. . BUSHING (Used with 22C1692-7, -11, and 42C1786-1)	1	J,IH
	NAS75-4-009	. . BUSHING (Used with 22C1692-1)	1	
-44	NAS75-4-011	. . BUSHING (Used with 22C1692-7, -11, and 42C1786-1)	1	J,IH
	NAS75-4-009	. . BUSHING (Used with 22C1692-1)	1	II
	NAS75-5-013	. . BUSHING (Used with 42C1786-1)	1	II
	NAS77-5-20	. . BUSHING (Used with 42C1786-1)	1	
-45	22C1753-36	. SPACER	1	
		Attaching Parts		
-46	AN386-2-16A	. PIN, Taper	1	
	AN364-1032	. NUT	1	
	AN975-3	. WASHER	1	
		———*———		
	22C1676-5	. BELLCRANK ASSEMBLY, Upper lateral	1	J,IH
	or			
	22C1676-3	. BELLCRANK ASSEMBLY, Upper lateral	1	J,IH
	or			
	22C1676-1	. BELLCRANK ASSEMBLY, Upper lateral	1	J,IH
	42C1780-1	. BELLCRANK ASSEMBLY, Upper lateral	1	II
-47	42C1622-2	. . SPACER (Used with 22C1676-3, -5, and 42C1780-1)	1	
	22C1622-4	. . BUSHING (Used with 22C1676-1)	2	J,IH
-48	NAS75-4-018	. . BUSHING (Used with 22C1676-5)	1	J,IH
	NAS75-4-012	. . BUSHING (Used with 22C1676-1 and -3)	1	J,IH
	NAS77-6-48	. . BUSHING (Used with 42C1780-1)	1	II
-49	NAS77-4-38	. . BUSHING (Used with 22C1676-5)	1	J,IH

Figure and Index Number	Part Number	Description 1 2 3 4 5 6 7	Units per Assembly	Usable On Code
66B-	NAS77-4-25	. . BUSHING (Used with 22C1676-3)	1	J,IH
	NAS75-4-012	. . BUSHING (Used with 22C1676-1)	1	J,IH
	NAS75-6-023	. . BUSHING (Used with 42C1780-1)	1	II
-50	NAS77-4-24	. . BUSHING (Used with 22C1676-5)	1	J,IH
	NAS77-4-20	. . BUSHING (Used with 22C1676-3)	1	J,IH
	NAS75-4-013	. . BUSHING (Used with 22C1676-1)	1	J,IH
	NAS75-5-019	. . BUSHING (Used with 42C1780-1)	1	II
-51	NAS75-4-016	. . BUSHING (Used with 22C1676-5)	1	J,IH
	NAS75-4-015	. . BUSHING (Used with 22C1676-3)	1	J,IH
	NAS75-4-012	. . BUSHING (Used with 22C1676-1)	1	J,IH
	NAS77-5-34	. . BUSHING (Used with 42C1780-1)	1	II
	NAS77-5-70	. . BUSHING (Used with 42C1780-1)	1	II
	NAS75-5-029	. . BUSHING (Used with 42C1780-1)	1	II
-52	MS15002-1	. . FITTING, Lubricator	1	
-53	22C1676-6	. . BELLCRANK (Used with 22C1676-5)	1	J,IH
	22C1676-4	. . BELLCRANK (Used with 22C1676-3)	1	J,IH
	22C1676-2	. . BELLCRANK (Used with 22C1676-1)	1	J,IH
	42C1780-3	. . BELLCRANK (Used with 42C1780-1)	1	II
-53A	22C1678-1	. TUBE, Torque	1	
	22C1673-5	. BELLCRANK ASSEMBLY, Aft lateral differential	1	J,IH
	or			
	22C1673-1	. BELLCRANK ASSEMBLY, Aft lateral differential	1	J,IH
	42C1673-1	. BELLCRANK ASSEMBLY, Aft lateral differential	1	II
		Attaching Parts		
-54	22C1685-2	. BOLT	1	
	22C1685-1	. BOLT (Used with 22C1730-2)	1	J,IH
	AN381-2-10	. PIN, Cotter	1	
	AN320-4	. NUT	1	
	AN960-416	. WASHER	1	
-55	22C1688-1	. WASHER	1	
	AN960-1016	. WASHER	1	
		———*———		
-56	AN201KP10A	. . BEARING	2	
-57	22C1622-5	. . BUSHING (Used with 22C1673-1)	2	J,IH
-57A	22C1753-4	. . SPACER	2	
-58	NAS75-5-015	. . BUSHING (Used with 22C1673-5)	1	J,IH
	NAS75-5-013	. . BUSHING (Used with 22C1673-1)	1	J,IH
	NAS75-6-026	. . BUSHING	1	II
-59	NAS77-5-31	. . BUSHING (Used with 22C1673-5)	1	J,IH
	NAS75-5-014	. . BUSHING (Used with 22C1673-1)	1	J,IH
	NAS77-6-59	. . BUSHING	1	II
-60	NAS77-4-32	. . BUSHING (Used with 22C1673-5)	1	J,IH
	NAS75-4-015	. . BUSHING (Used with 22C1673-1)	1	J,IH
	NAS75-5-025	. . BUSHING	1	II
-61	NAS75-4-016	. . BUSHING (Used with 22C1673-5)	1	J,IH
	NAS75-4-015	. . BUSHING (Used with 22C1673-1)	1	J,IH
	NAS77-5-59	. . BUSHING	1	II
-62	22C1673-7	. . BELLCRANK (Used with 22C1673-5)	1	J,IH
	22C1673-3	. . BELLCRANK (Used with 22C1673-1)	1	J,IH
	42C1673-3	. . BELLCRANK	1	II
-63	22C1719	LINK ASSEMBLY, Lateral, see fig. 64*	Ref	
		Attaching Parts		
-64	AN175-20	BOLT	1	J,IH
	AN175-25	BOLT	1	II
-64A	AN175-21	BOLT	1	
	AN381-2-10	PIN, Cotter	1	
	AN381-2-8	PIN, Cotter	1	
	AN310-5	NUT	2	
	AN960-516	WASHER	1	
	AN960-516L	WASHER	1	
		———*———		

*For proper usable on codes and complete breakdown, see figure number as indicated.

Figure and Index Number	Part Number	1 2 3 4 5 6 7 Description	Units per Assembly	Usable On Code
66B-65	22C1682	LINK ASSEMBLY, Longitudinal, see fig. 64*	Ref	
		Attaching Parts		
-66	AN174-17	BOLT	1	J,IH
	AN174-21	BOLT	1	II
	AN381-2-10	PIN, Cotter	1	
	AN310-4	NUT	1	
	AN960-416	WASHER	1	
	AN960-416L	WASHER	1	
		———*———		
-67	22C1699	ROD ASSEMBLY, Lateral, see fig. 66*	Ref	
-68	22C1699	ROD ASSEMBLY, Collective pitch, see fig. 66*	Ref	
-69	22C1699	ROD ASSEMBLY, Longitudinal, see fig. 66*	Ref	
		Attaching Parts		
-69A	AN24-27	BOLT	1	J,DP
	AN24-29	BOLT	1	DQ
-70	AN174-15	BOLT	1	
-71	AN174-17	BOLT	1	J,IH
	AN174-21	BOLT	2	II
	AN381-2-10	PIN, Cotter	3	
	AN310-4	NUT	3	
	AN960-416	WASHER	5	
-72	AN960-416L	WASHER	1	
		———*———		
	22C1730-4	BELLCRANK ASSEMBLY, See fig. 66C (special spare parts assembly)	Ref	
	22C1730-100	BELLCRANK ASSEMBLY, See fig. 66C (special spare parts assembly)	Ref	

*For proper usable on codes and complete breakdown, see figure number as indicated.

Controls

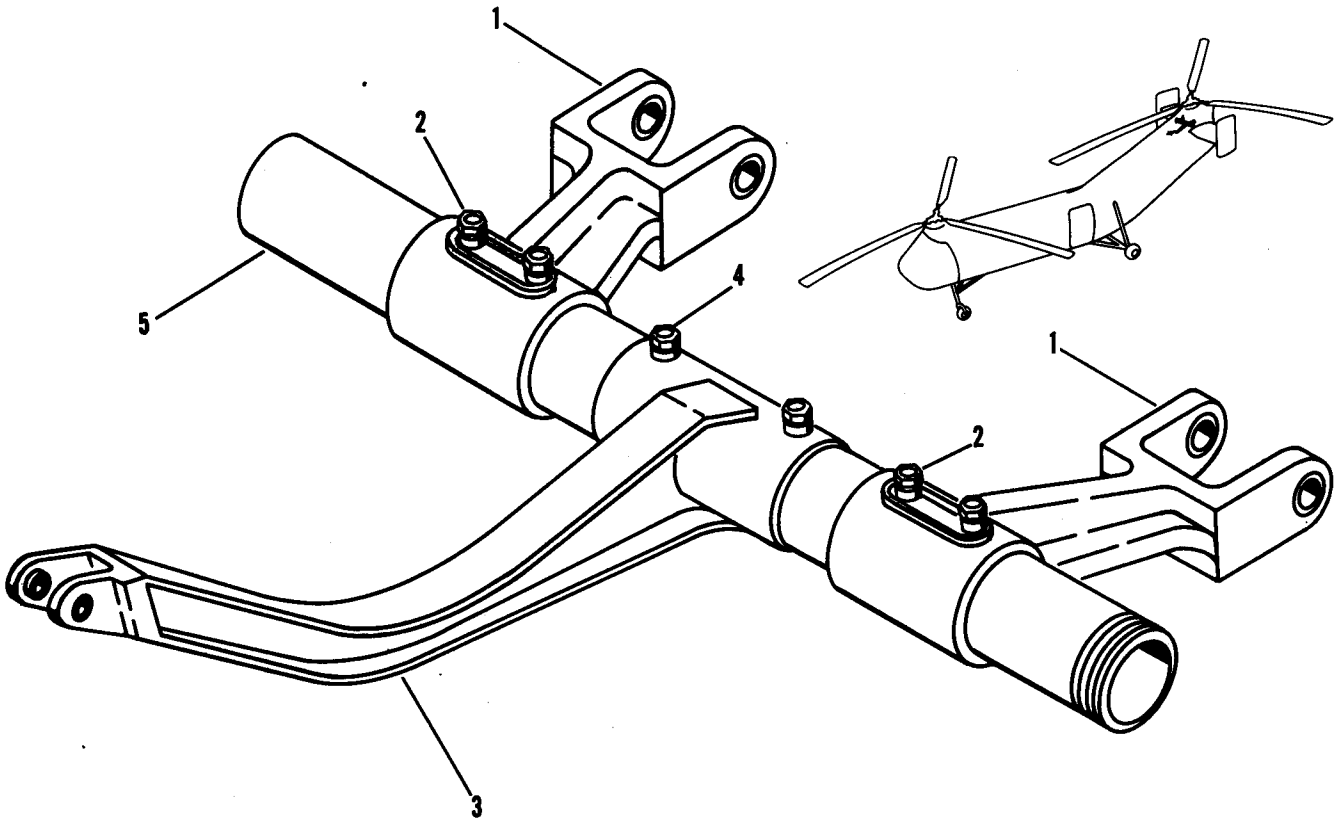

Figure 66C. Aft Upper Controls Bellcrank Assembly (Special Spare Parts Assembly)

Figure and Index Number	Part Number	Description 1 2 3 4 5 6 7	Units per Assembly	Usable On Code
66C-	22C1730-100	BELLCRANK ASSEMBLY, Aft upper controls (special spare parts assy)	1	C
	or 22C1730-4	BELLCRANK ASSEMBLY, Aft upper controls (special spare parts assy)	1	C
-1	22C1693-3	. BELLCRANK ASSEMBLY (Used with 22C1730-100)	2	C
	or 22C1693-1	. BELLCRANK ASSEMBLY (Used with 22C1730-4)	2	C
		Attaching Parts		
-2	AN386-4-22A	. PIN, Taper (used with 22C1693-3)	2	C
	AN386-3-21A	. PIN, Taper (used with 22C1693-1)	2	C
	AN364-524	. NUT (Used with 22C1693-3)	2	C
	AN364-428	. NUT (Used with 22C1693-1)	2	C
	AN975-5	. WASHER (Used with 22C1693-3)	2	C
	AN975-4	. WASHER (Used with 22C1693-1)	2	C
		———*———		
-3	22C1692-11	. ARM ASSEMBLY (Used with 22C1730-100)	1	C
	or 22C1692-7	. ARM ASSEMBLY (Used with 22C1730-4)	1	C
	or 22C1692-1	. ARM ASSEMBLY (Used with 22C1730-4)	1	C

Figure and Index Number	Part Number	1 2 3 4 5 6 7 Description	Units per Assembly	Usable On Code
66C-		*Attaching Parts*		
-4	AN386-4-17A	. PIN, Taper (used with 22C1692-11)	2	C
	AN386-3-16A	. PIN, Taper (used with 22C1692-1 and -7)	2	C
	AN364-524	. NUT (Used with 22C1692-11)	2	C
	AN364-428	. NUT (Used with 22C1692-1 and -7)	2	C
	AN975-5	. WASHER (Used with 22C1692-11)	2	C
	AN975-4	. WASHER (Used with 22C1692-1 and -7)	2	C
		———*———		
-5	22C1678-1	. TUBE, Torque	1	C

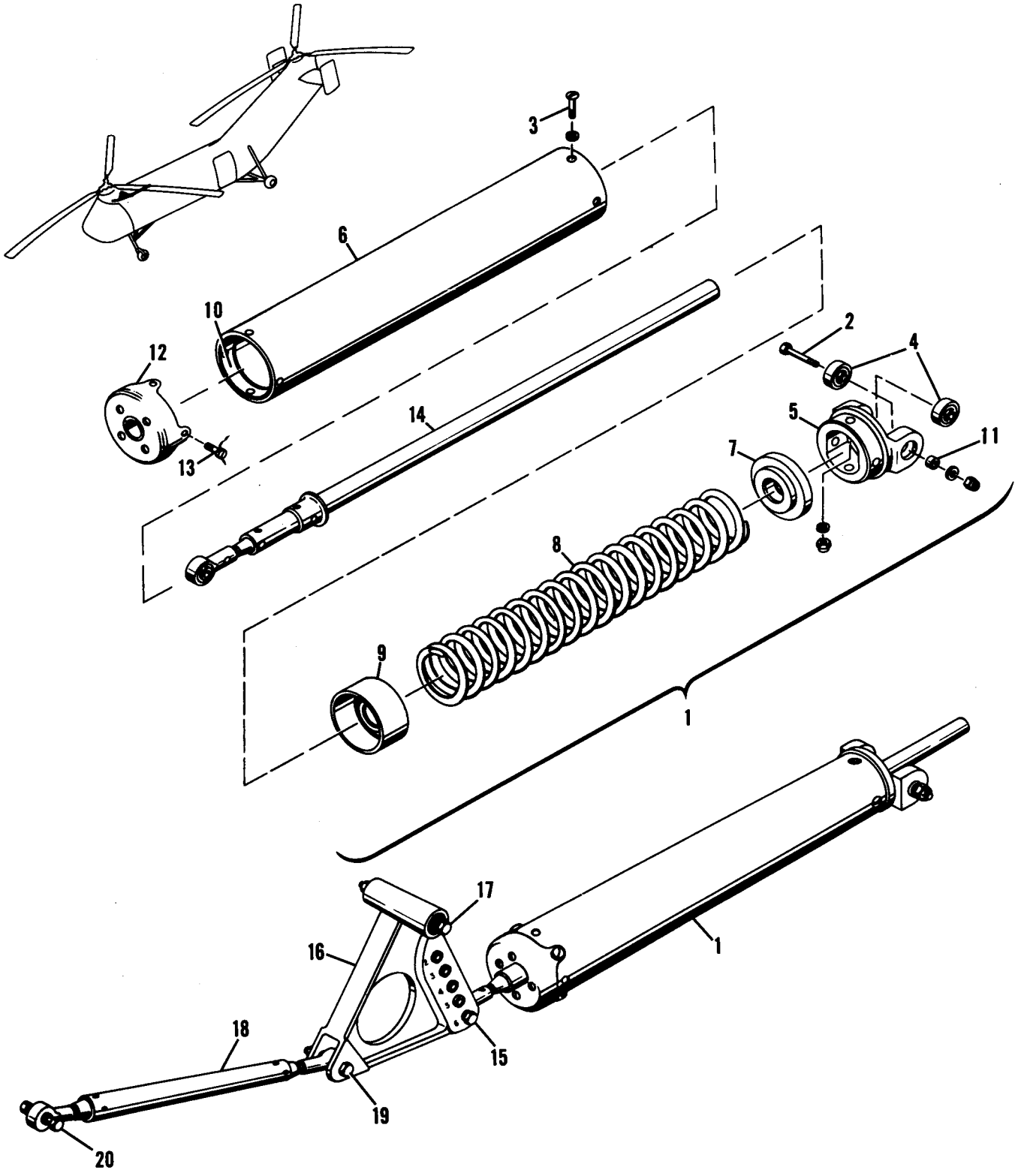

Figure 67. Forward Collective Pitch Bungee

Figure and Index Number	Part Number	Description 1 2 3 4 5 6 7	Units per Assembly	Usable On Code
67-	22C1900-1	BUNGEE INSTALLATION, Fwd collective pitch	1	
-1	22C1901-1	. BUNGEE ASSEMBLY, Flight control	1	
		Attaching Parts		
-2	AN4-12A	. BOLT	2	
	AN365-428	. NUT	2	
	AN960D416	. WASHER	2	
		———*———		
	22C1911-1	. . FITTING ASSEMBLY, Flight control bungee	1	
		Attaching Parts		
-3	AN23-12A	. . BOLT	4	
	AN364-1032	. . NUT	4	
	AN960D10	. . WASHER	4	
	AN960-10L	. . WASHER	4	
		———*———		
-4	AN200KP4	. . . BEARING	2	
-5	22C1911-2	. . . FITTING	1	
-6	22C1901-2	. . TUBE	1	
-7	22C1909-1	. . RETAINER, Flight control bungee spring	1	
-8	22C1917-1	. . SPRING	1	
-9	22C1907-1	. . GUIDE, Flight control bungee rod	1	
-10	22C1908-1	. . RING	1	
-11	22C1753-66	. SPACER	2	
	or			
	NAS43DD4-11	. SPACER	2	
-12	22C1954-1	. CAP ASSEMBLY	1	X,BV
		Attaching Parts		
-13	AN501A10-5	. SCREW	4	X,BV
	AN960PD10	. WASHER	4	X,BV
		———*———		
-14	22C1902-1	. ROD ASSEMBLY, Flight control bungee	1	JO
	22C1955-1	. ROD ASSEMBLY, Flight control bungee	1	JP
		Attaching Parts		
-15	AN4-14	. BOLT	1	
	AN381-2-12	. PIN, Cotter	1	
	AN310-4	. NUT	1	
	AN960D416	. WASHER	1	
	AN960D416L	. WASHER	1	
		———*———		
	RE4H6	. . BEARING, Rod end (FAF)	1	
-16	22C1914-3	. BELLCRANK ASSEMBLY, Collective pitch bungee idler, see fig. 68	1	
	or			
	22C1914-1	. BELLCRANK ASSEMBLY, Collective pitch bungee idler, see fig. 68	1	
		Attaching Parts		
-17	AN4-36A	. BOLT	1	
	AN365-428	. NUT	1	
	AN960D416	. WASHER	3	
	AN960-416L	. WASHER	2	JA,KH
		———*———		
-18	22C1912-1	. ROD ASSEMBLY	1	JO
	22C1773-3	. ROD ASSEMBLY	1	JP
		Attaching Parts		
-19	AN4-14	. BOLT	1	
-20	AN24-24	. BOLT	1	
	AN381-2-12	. PIN, Cotter	2	
	AN310-4	. NUT	2	
	AN960D416	. WASHER	2	
	AN960D416L	. WASHER	2	
		———*———		
	RE4M6	. . BEARING, Rod end (FAF)	2	
	AN316-6R	. . NUT	2	

Controls

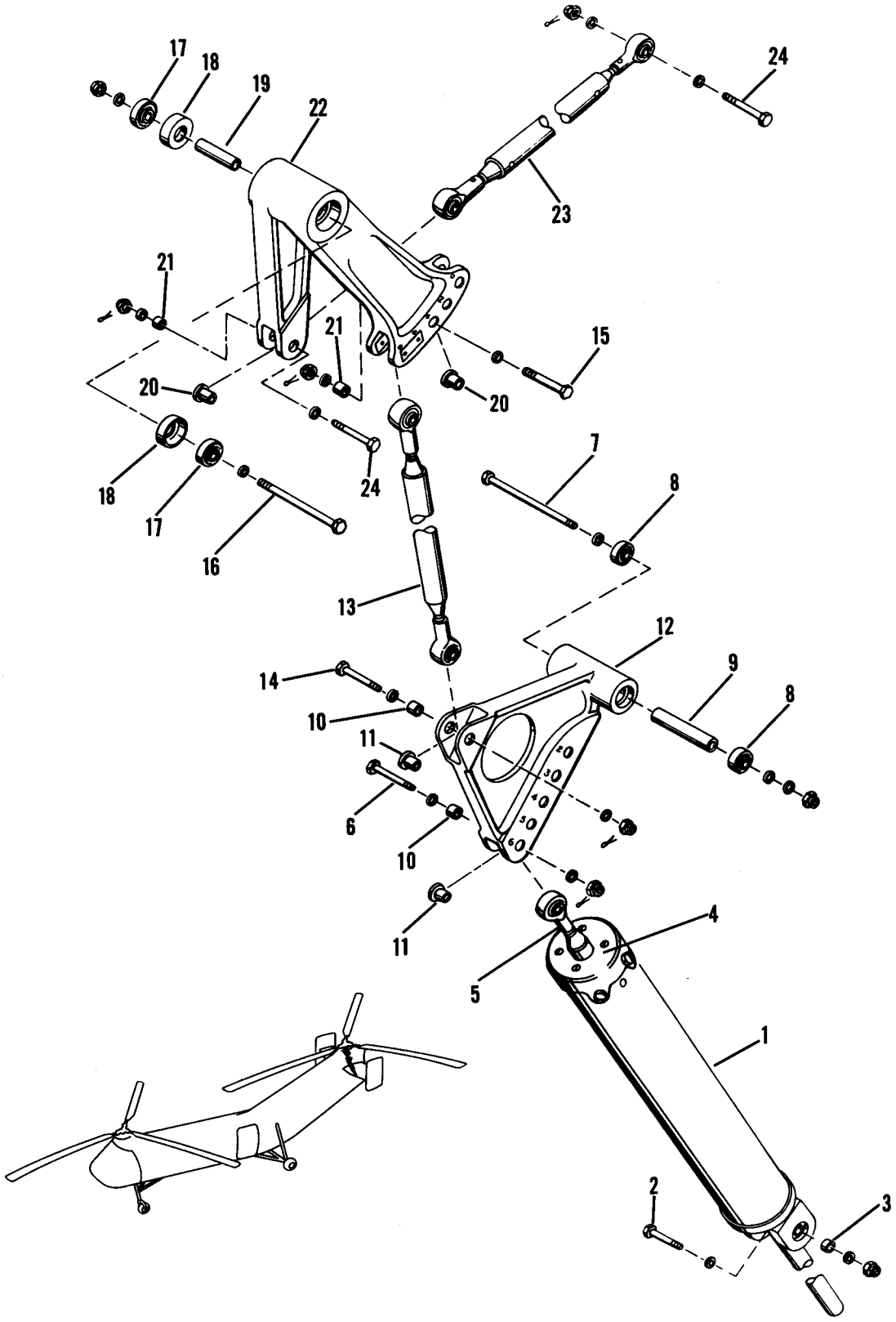

Figure 68. Aft Collective Pitch Bungee

Figure and Index Number	Part Number	Description 1 2 3 4 5 6 7	Units per Assembly	Usable On Code
68-	22C1920-1	BUNGEE INSTALLATION, Aft collective pitch	1	
-1	22C1901-1	. BUNGEE ASSEMBLY, Flight control, see fig. 67	1	
		Attaching Parts		
-2	AN4-12A	. BOLT	2	
	AN365-428	. NUT	2	
	AN960D416	. WASHER	2	
		———*———		
-3	22C1753-66 or NAS43DD4-11	. SPACER	2	
		. SPACER	2	
-4	22C1954-1	. CAP ASSEMBLY	1	X,BV
		Attaching Parts		
	AN501A10-5	. SCREW	4	X,BV
	AN960PD10	. WASHER	4	X,BV
		———*———		
-5	22C1902-1	. ROD ASSEMBLY, Flight control bungee, see fig. 67	1	JO
	22C1955-1	. ROD ASSEMBLY, Flight control bungee, see fig. 67	1	JP
		Attaching Parts		
-6	AN4-14	. BOLT	1	
	AN381-2-12	. PIN, Cotter	1	
	AN310-4	. NUT	1	
	AN960D416	. WASHER	1	
	AN960D416L	. WASHER	1	
	AN960-416L	. WASHER	2	JA,KH
		———*———		
	22C1914-3 or 22C1914-1	. BELLCRANK ASSEMBLY, Collective pitch bungee idler	1	
		. BELLCRANK ASSEMBLY, Collective pitch bungee idler	1	
		Attaching Parts		
-7	AN4-36A	. BOLT	1	
	AN365-428	. NUT	1	
	AN960D416	. WASHER	3	
		———*———		
-8	AN201KP4A	. . BEARING	2	
-9	22C1753-64	. . SPACER	1	
-10	NAS75-4-009	. . BUSHING (Used with 22C1914-4)	2	
-11	NAS77-4-12	. . BUSHING (Used with 22C1914-4)	2	
	NAS75-4-007	. . BUSHING (Used with 22C1914-2)	4	
-12	22C1914-4	. . BELLCRANK (Used with 22C1914-3)	1	
	22C1914-2	. . BELLCRANK (Used with 22C1914-1)	1	
-13	22C1912-1	. ROD ASSEMBLY, See fig. 67	1	JO
	22C1773-3	. ROD ASSEMBLY, See fig. 67	1	JP
		Attaching Parts		
-14	AN4-14	. BOLT	1	
-15	AN4-15	. BOLT	1	
	AN381-2-12	. PIN, Cotter	2	
	AN310-4	. NUT	2	
	AN960D416	. WASHER	2	
	AN960D416L	. WASHER	2	
		———*———		
	22C1916-3 or 22C1916-1	. BELLCRANK ASSEMBLY, Aft collective pitch bungee	1	
		. BELLCRANK ASSEMBLY, Aft collective pitch bungee	1	
		Attaching Parts		
-16	AN4-32A	. BOLT	1	
	AN365-428	. NUT	1	
	AN960D416	. WASHER	2	
		———*———		
-17	AN200KP4	. . BEARING	2	
-18	22C1622-1	. . BUSHING (Used with 22C1916-2)	2	
-19	22C1753-70	. . SPACER	1	
-20	NAS77-4-18	. . BUSHING (Used with 22C1916-4)	2	
	NAS75-4-010	. . BUSHING (Used with 22C1916-2)	2	
-21	NAS75-4-011	. . BUSHING (Used with 22C1916-4)	2	

Figure and Index Number	Part Number	1 2 3 4 5 6 7 Description	Units per Assembly	Usable On Code
68-	NAS75-4-009	. . BUSHING (Used with 22C1916-2)	2	
-22	22C1916-4	. . BELLCRANK (Used with 22C1916-3)	1	
	22C1916-2	. . BELLCRANK (Used with 22C1916-1)	1	
-23	22C1912-2	. ROD ASSEMBLY	1	JO
	22C1773-4	. ROD ASSEMBLY	1	JP
		Attaching Parts		
-24	AN4-15	. BOLT	2	
	AN381-2-12	. PIN, Cotter	2	
	AN310-4	. NUT	2	
	AN960D416	. WASHER	2	
	AN960D416L	. WASHER	2	
		_____		
	RE4M6	. . BEARING, Rod end (FAF)	2	
	AN316-6R	. . NUT	2	

Controls

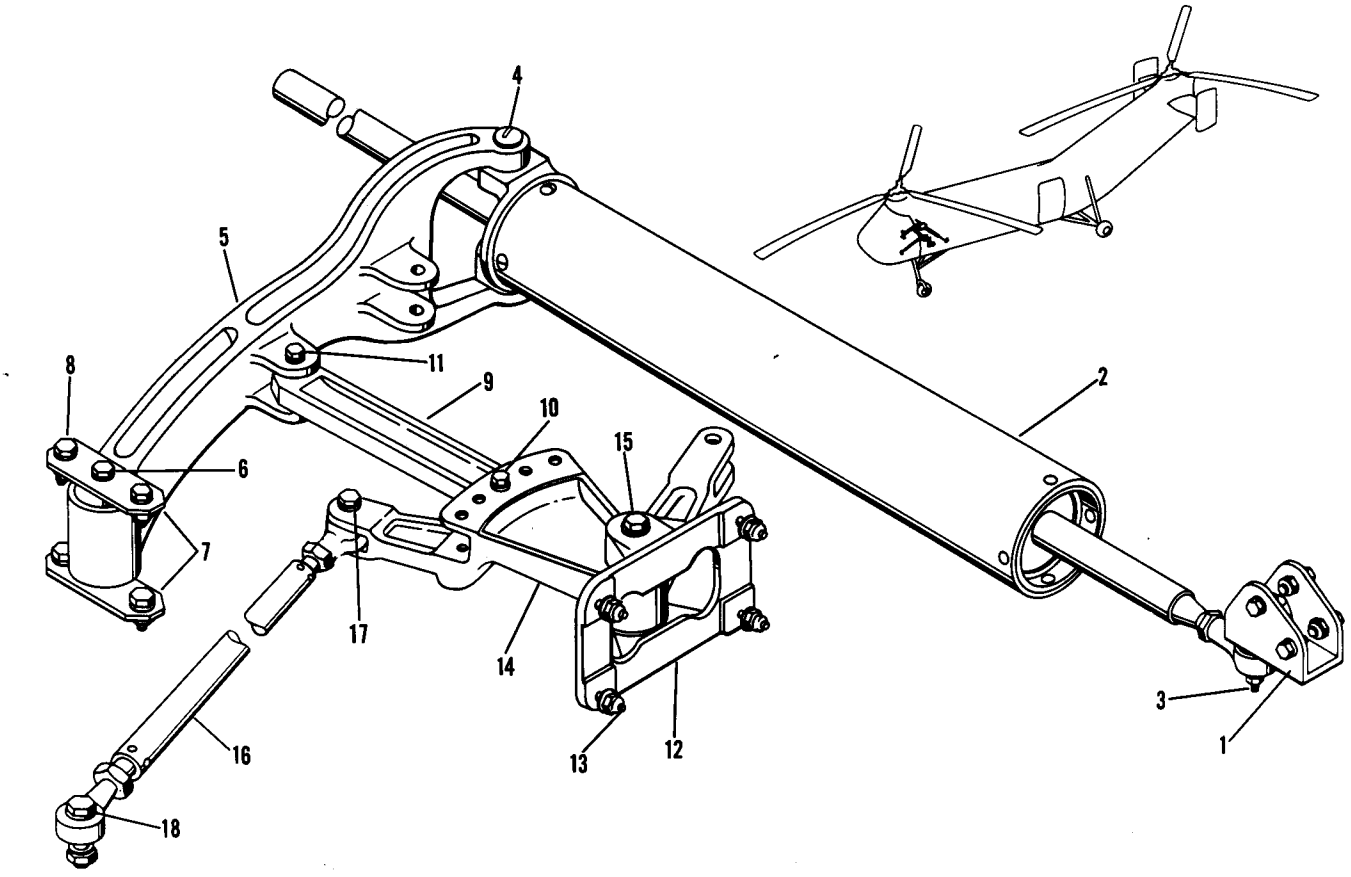

Figure 69. Longitudinal Bungee Installation

Figure and Index Number	Part Number	Description 1 2 3 4 5 6 7	Units per Assembly	Usable On Code
69-	22C1925-3	BUNGEE INSTALLATION, Longitudinal	1	
	or			
	22C1925-1	BUNGEE INSTALLATION, Longitudinal	1	
-1	22C1926-1	. SUPPORT ASSEMBLY, Longitudinal bungee end	1	
		Attaching Parts		
	AN3-5A	. BOLT	4	
	AN365-1032	. NUT	4	
	AN960D10	. WASHER	8	
		———*———		
	NAS75-4-023	. . BUSHING	1	
	22C1926-2	. . SUPPORT	1	
-2	22C1933-1	. BUNGEE ASSEMBLY, Longitudinal, see fig. 70	Ref	
		Attaching Parts		
-3	AN174-17A	. BOLT	1	
-4	AN24-26A	. BOLT	2	
	AN364-428	. NUT	2	
	AN960D416	. WASHER (Three used with AN174-17A)	4	
	AN960-416	. WASHER (Under hd of AN24-26A)	2	
		———*———		
-5	22C1927-3	. BELLCRANK ASSEMBLY, Longitudinal bungee idler	1	
	or			
	22C1927-1	. BELLCRANK ASSEMBLY, Longitudinal bungee idler	1	

Figure and Index Number	Part Number	Description 1 2 3 4 5 6 7	Units per Assembly	Usable On Code
69-		*Attaching Parts*		
-6	AN4-32A	. BOLT (Used with 22C1925-1)	1	
	AN4-33A	. BOLT (Used with 22C1925-3)	1	
	AN365-428	. NUT	1	
	AN960D416	. WASHER	2	
		———*———		
	NAS75-4-018	. . BUSHING	2	
	NAS75-4-015	. . BUSHING	2	
	NAS77-4-22	. . BUSHING	2	
	AN201KP4A	. . BEARING	2	
	42C1622-4	. . SPACER (Used with 22C1927-4)	2	
	22C1622-3	. . BUSHING (Used with 22C1927-2)	2	
	22C1753-71	. . SPACER	1	
	22C1927-4	. . BELLCRANK (Used with 22C1927-3)	1	
	22C1927-2	. . BELLCRANK (Used with 22C1927-1)	1	
-7	22C1229-1	. PLATE, Idler bellcrank adjustable mounting (used with 22C1925-1)	2	
	22C1929-1	. PLATE, Idler bellcrank adjustable mounting (used with 22C1925-3)	1	
	22C1929-2	. PLATE, Idler bellcrank adjustable mounting (used with 22C1925-3)	1	
		Attaching Parts		
-8	AN4-6A	. BOLT	2	
	AN365-428	. NUT	2	
	AN960D416	. WASHER	4	
		———*———		
-9	42C1364-1	. LINK ASSEMBLY, Longitudinal bungee	1	
	or			
	22C1931-1	. LINK ASSEMBLY, Longitudinal bungee	1	
		Attaching Parts		
-10	AN4-15	. BOLT	1	
	AN4-22	. BOLT (Alternate)	1	
-11	AN4-16	. BOLT	1	
	AN381-2-12	. PIN, Cotter	2	
	AN310-4	. NUT	2	
	AN960D416L	. WASHER (Used under hd of AN4-22)	1	
	AN960D416	. WASHER	6	
		———*———		
-12	22C1932-3	. SUPPORT ASSEMBLY, Longitudinal bungee	1	
	or			
	22C1932-1	. SUPPORT, Longitudinal bungee	1	
		Attaching Parts		
-13	AN3-7A	. BOLT	4	
	AN365-1032	. NUT	4	
	AN960D10	. WASHER	4	
	AN960D10L	. WASHER	4	
		———*———		
	NAS77-4-28	. . BUSHING (Used with 22C1932-4)	1	
	NAS75-4-015	. . BUSHING (Used with 22C1932-4)	1	
	22C1932-4	. . SUPPORT (Used with 22C1932-3)	1	
-14	22C1930-3	. BELLCRANK ASSEMBLY, Longitudinal bungee adjustable	1	
	or			
	22C1930-1	. BELLCRANK ASSEMBLY, Longitudinal bungee adjustable	1	
		Attaching Parts		
-15	AN4-31	. BOLT	1	
	AN381-2-12	. PIN, Cotter	1	
	AN310-4	. NUT	1	
	AN960D416	. WASHER	3	
	AN960D416L	. WASHER	1	
		———*———		
	AN201KP4A	. . BEARING	2	
	42C1622-4	. . SPACER (Used with 22C1930-4)	2	
	22C1622-3	. . BUSHING (Used with 22C1930-2)	2	
	22C1753-69	. . SPACER	1	

Figure and Index Number	Part Number	Description 1 2 3 4 5 6 7	Units per Assembly	Usable On Code
69-	NAS77-4-17	. . BUSHING (Used with 22C1930-4)	1	
	NAS75-4-010	. . BUSHING (Used with 22C1930-2)	1	
	NAS75-4-011	. . BUSHING (Used with 22C1930-4)	1	
	NAS75-4-009	. . BUSHING (Used with 22C1930-2)	1	
	22C1930-4	. . BELLCRANK (Used with 22C1930-3)	1	
	22C1930-2	. . BELLCRANK (Used with 22C1930-1)	1	
-16	22C1773-2	. ROD ASSEMBLY	1	
		Attaching Parts		
-17	AN4-15	. BOLT	1	
-18	AN4-15A	. BOLT	1	
	AN381-2-12	. PIN, Cotter	1	
	AN310-4	. NUT	1	
	AN365-428	. NUT	1	
	AN960-416	. WASHER	1	
	AN960D416	. WASHER	1	
	AN960D416L	. WASHER	2	
		———*———		
	RE4M6	. . BEARING, Rod end (FAF)	2	
	AN316-6R	. . NUT	2	
	22C1753-66	. SPACER, Longitudinal bungee	2	
	22C1753-72	. SPACER, Longitudinal bungee (used with 22C1925-1)	2	
	22C1753-72	. SPACER, Longitudinal bungee (used with 22C1925-3)	1	
	NAS75-4-012	. BUSHING (Used with 22C1925-3)	1	

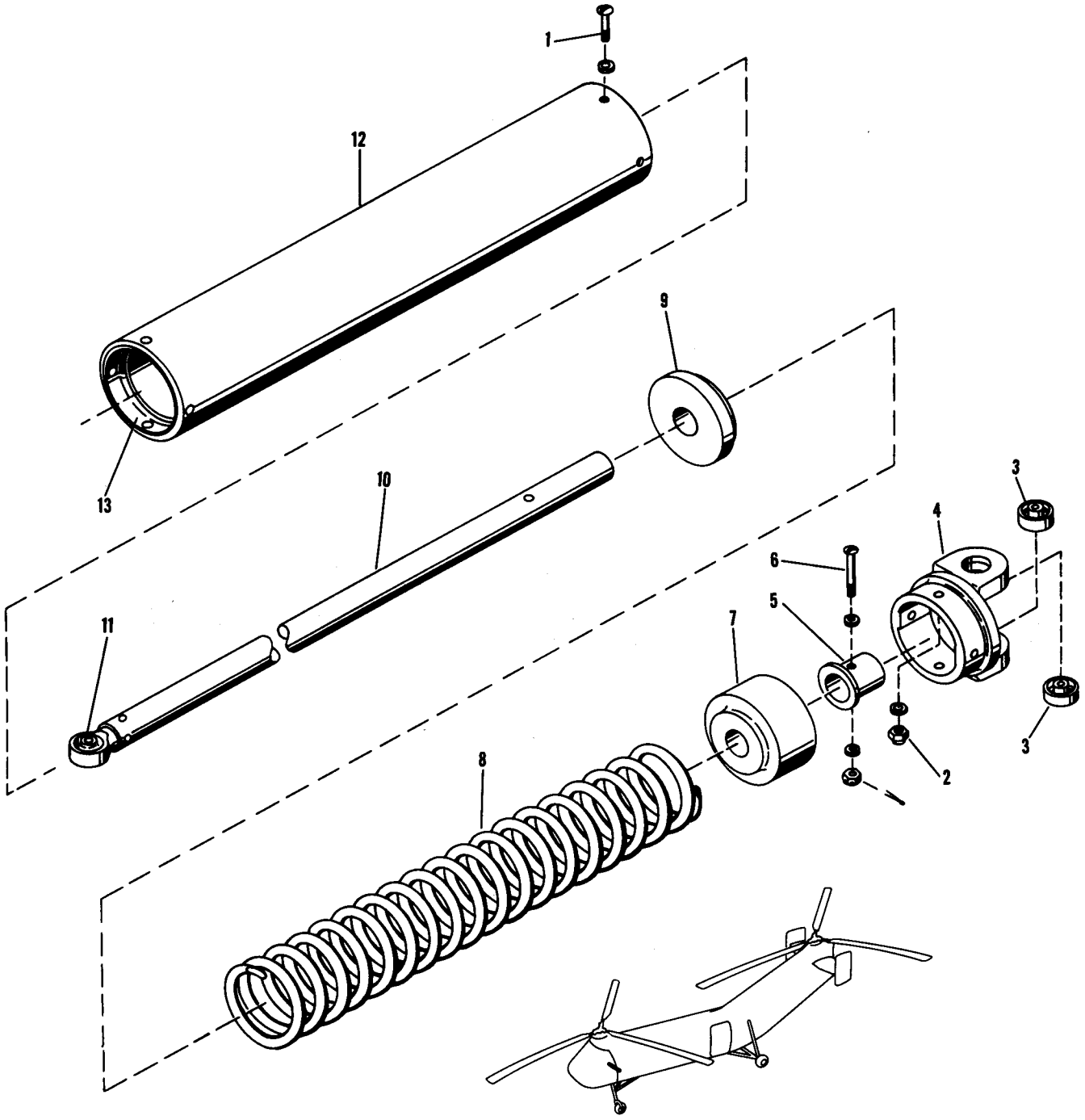

Figure 70. Longitudinal Bungee

Figure and Index Number	Part Number	Description 1 2 3 4 5 6 7	Units per Assembly	Usable On Code
70-	22C1933-1	BUNGEE ASSEMBLY, Longitudinal	1	
	22C1911-1	. FITTING ASSEMBLY	1	
		Attaching Parts		
-1	AN23-12A	. BOLT	4	
-2	AN364-428	. NUT	4	
	AN960D10	. WASHER	4	
	AN960-10L	. WASHER	4	
		———*———		
■ -3	AN200KP4	. . BEARING	2	
-4	22C1911-2	. . FITTING	1	
-5	22C1903-1	. STOP	1	
		Attaching Parts		
-6	AN23-20	. BOLT	1	
	AN381-2-12	. PIN, Cotter	1	
	AN320-3	. NUT	1	
	AN960D10	. WASHER	2	
		———*———		
-7	22C1907-1	. GUIDE	1	
-8	22C1918-1	. SPRING	1	
-9	22C1909-1	. RETAINER	1	
-10	22C1933-2	. TUBE ASSEMBLY	1	
-11	RE4H6	. . BEARING, Rod end (FAF)	1	
-12	22C1933-3	. TUBE	1	
-13	22C1908-1	. RING	1	

Controls

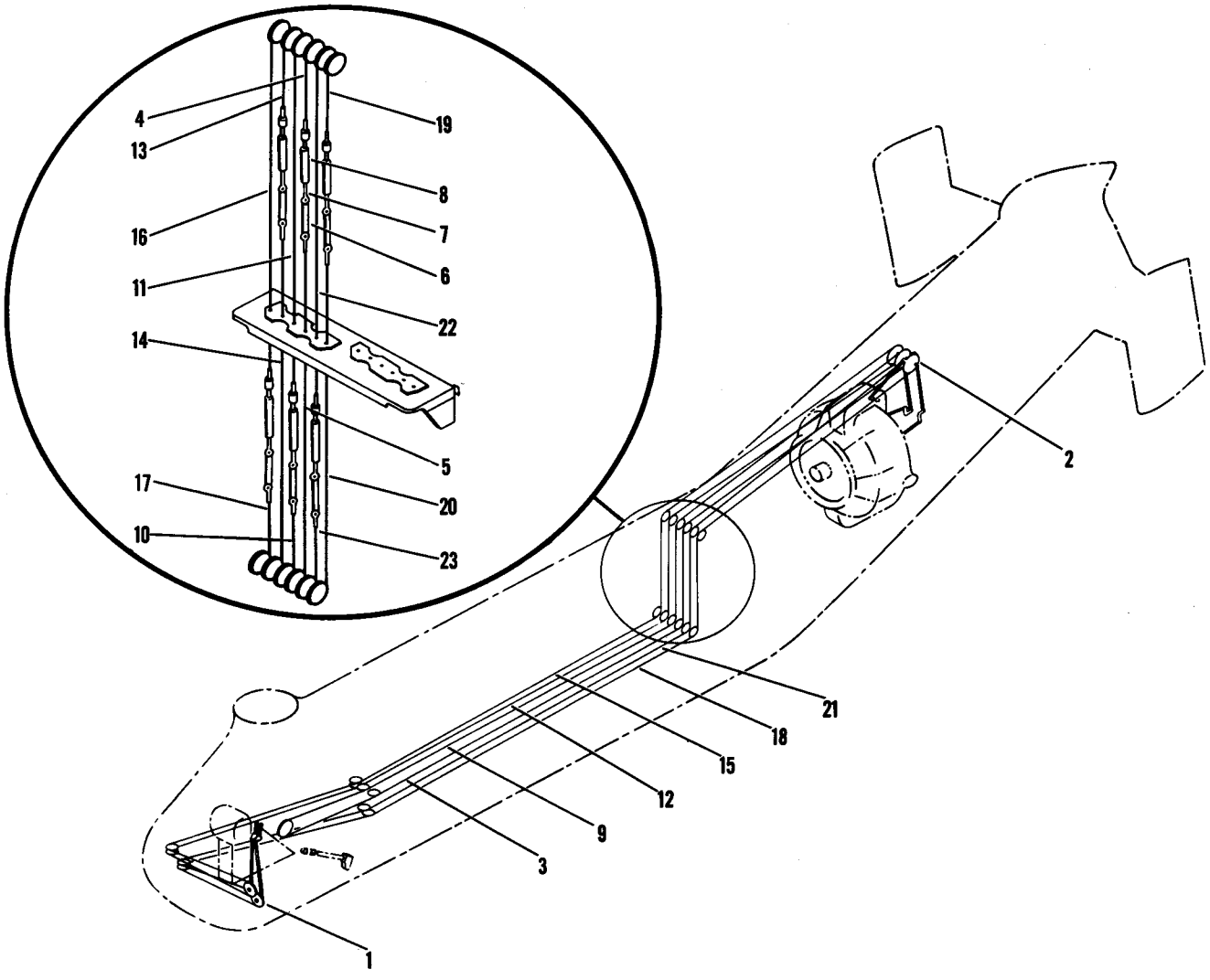

Figure 71. Engine Controls

Figure and Index Number	Part Number	Description 1 2 3 4 5 6 7	Units per Assembly	Usable On Code
71-	22C2001-1	CONTROLS ASSEMBLY, Engine	1	J
	42C2001-1	CONTROLS ASSEMBLY, Engine	1	AU
-1	22C2200-1	. CONTROLS INSTALLATION, Cockpit section engine, see fig. 72	Ref	
-2	22C2300-1	. CONTROLS INSTALLATION, Engine section, see fig. 73	Ref	J
	42C2300-1	. CONTROLS INSTALLATION, Engine section, see fig. 73	Ref	AU
-3	22C2400-1	. CABLE ASSEMBLY, Throttle lower	1	J
	22C2400-31	. CABLE ASSEMBLY, Throttle lower	1	AU
-4	22C2400-7	. . CABLE SUBASSEMBLY	1	
-5	22C2400-8	. . CABLE SUBASSEMBLY	1	
-6	22C2401-1	. . LINK, Engine control adjustment	1	
		Attaching Parts		
	AN23-10	. . BOLT	2	
	AN381-2-8	. . PIN, Cotter	2	
	AN320-3	. . NUT	2	
	AN960-10	. . WASHER	2	
		———*———		
-7	22C2402-1	. . CLEVIS	1	
-8	AN155-16L	. . BARREL, Turnbuckle	1	J
	D6-1001-3L-3A	. . QUICK DISCONNECT (PAS)	1	AU
	AN995F47	. . WIRE, Lock	AR	
-9	22C2400-2	. CABLE ASSEMBLY, Throttle upper	1	J
	22C2400-32	. CABLE ASSEMBLY, Throttle upper	1	AU
-10	22C2400-9	. . CABLE SUBASSEMBLY	1	
-11	22C2400-10	. . CABLE SUBASSEMBLY	1	
	22C2401-1	. . LINK, Engine control adjustment	1	
	22C2402-1	. . CLEVIS	1	
	AN155-16L	. . BARREL, Turnbuckle	1	J
	D6-1001-3L-3A	. . QUICK DISCONNECT (PAS)	1	AU
-12	22C2400-3	. CABLE ASSEMBLY, Mixture lower	1	J
	22C2400-33	. CABLE ASSEMBLY, Mixture lower	1	AU
-13	22C2400-11	. . CABLE SUBASSEMBLY	1	
-14	22C2400-12	. . CABLE SUBASSEMBLY	1	
	22C2401-1	. . LINK, Engine control adjustment	1	
	22C2402-1	. . CLEVIS	1	
	AN155-16L	. . BARREL, Turnbuckle	1	J
	D6-1001-3L-3A	. . QUICK DISCONNECT (PAS)	1	AU
-15	22C2400-4	. CABLE ASSEMBLY, Mixture upper	1	J
	22C2400-34	. CABLE ASSEMBLY, Mixture upper	1	AU
-16	22C2400-13	. . CABLE SUBASSEMBLY	1	
-17	22C2400-14	. . CABLE SUBASSEMBLY	1	
	22C2401-1	. . LINK, Engine control adjustment	1	
	22C2402-1	. . CLEVIS	1	
	AN155-16L	. . BARREL, Turnbuckle	1	J
	D6-1001-3L-3A	. . QUICK DISCONNECT (PAS)	1	AU
-18	22C2400-5	. CABLE ASSEMBLY, Carburetor heat lower	1	J
	22C2400-35	. CABLE ASSEMBLY, Carburetor heat lower	1	AU
-19	22C2400-15	. . CABLE SUBASSEMBLY	1	
-20	22C2400-16	. . CABLE SUBASSEMBLY	1	J
	22C2400-37	. . CABLE SUBASSEMBLY	1	AU
	22C2401-1	. . LINK, Engine control adjustment	1	
	22C2402-1	. . CLEVIS	1	
	AN155-16L	. . BARREL, Turnbuckle	1	J
	D6-1001-3L-3A	. . QUICK DISCONNECT (PAS)	1	AU
-21	22C2400-6	. CABLE ASSEMBLY, Carburetor heat upper	1	J
	22C2400-36	. CABLE ASSEMBLY, Carburetor heat upper	1	AU
-22	22C2400-17	. . CABLE SUBASSEMBLY	1	J
	22C2400-38	. . CABLE SUBASSEMBLY	1	AU
-23	22C2400-18	. . CABLE SUBASSEMBLY	1	
	22C2401-1	. . LINK, Engine control adjustment	1	

Figure and Index Number	Part Number	1 2 3 4 5 6 7 Description	Units per Assembly	Usable On Code
71-	22C2402-1	. . CLEVIS	1	
	AN155-16L	. . BARREL, Turnbuckle	1	J
	D6-1001-3L-3A	. . QUICK DISCONNECT (PAS)	1	AU

Controls

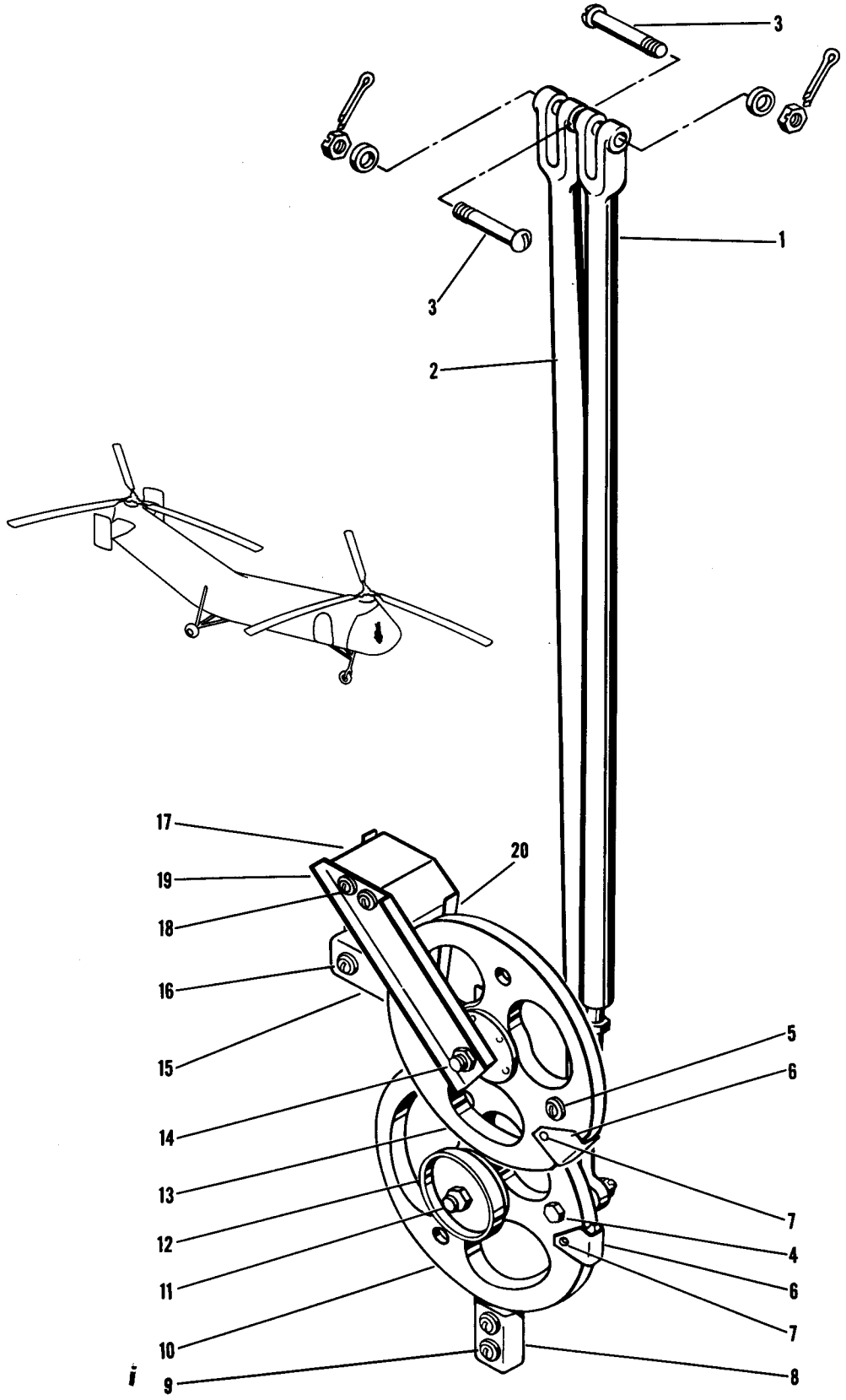

Figure 72. Cockpit Section Engine Controls

Figure and Index Number	Part Number	Description 1 2 3 4 5 6 7	Units per Assembly	Usable On Code
72-	22C2200-1	CONTROLS INSTALLATION, Cockpit section engine	1	
-1	NAS365-7A1750	. ROD, Control	1	
-2	NAS365-7A2100	. ROD, Control	1	
		Attaching Parts		
-3	AN23-12	. BOLT	1	
-4	AN3-13A	. BOLT	1	
-5	AN23-21A	. BOLT	1	
	AN381-2-8	. PIN, Cotter	1	
	AN320-3	. NUT	1	
	AN365-1032	. NUT	1	
	AN960-10	. WASHER	1	
	AN960-10L	. WASHER	1	
	AN960D10	. WASHER	1	
		———*———		
-6	22C2314-1	. GUARD, Cable	2	
		Attaching Parts		
-7	AN515-6-10	. SCREW	1	
	AN365-632	. NUT	1	
	AN960D6	. WASHER	1	
		———*———		
-8	22C2204-1	. GUARD, Control cable	1	
		Attaching Parts		
-9	AN23-14A	. BOLT	2	
	AN364-1032	. NUT	2	
	AN960D10	. WASHER	4	
		———*———		
-10	22C2301-8	. QUADRANT ASSEMBLY, Engine control	1	J
	22C2301-11	. QUADRANT ASSEMBLY, Engine control	1	AU
		Attaching Parts		
-11	AN4-25A	. BOLT	1	
	AN365-428	. NUT	1	
	AN960D416	. WASHER	2	
		———*———		
-12	22C2203-1	. GUARD, Forward mixture control	1	
-13	22C2301-7	. QUADRANT ASSEMBLY, Engine control	1	
		Attaching Parts		
-14	AN4-31A	. BOLT	1	
	AN365-428	. NUT	1	
	AN960D416	. WASHER	2	
		———*———		
-15	22C2204-2	. GUARD, Control cable	1	
		Attaching Parts		
-16	AN23-14A	. BOLT	2	
	AN364-1032	. NUT	2	
	AN960D10	. WASHER	4	
		———*———		
-17	22C2204-3	. GUARD, Control cable	1	
		Attaching Parts		
-18	AN23-26A	. BOLT	2	
	AN364-1032	. NUT	2	
	AN960D10	. WASHER	4	
		———*———		
-19	22C2201-1	. CHANNEL, Forward cable guard mount	1	
-20	22C2202-1	. CHANNEL, Aft cable guard mount	1	

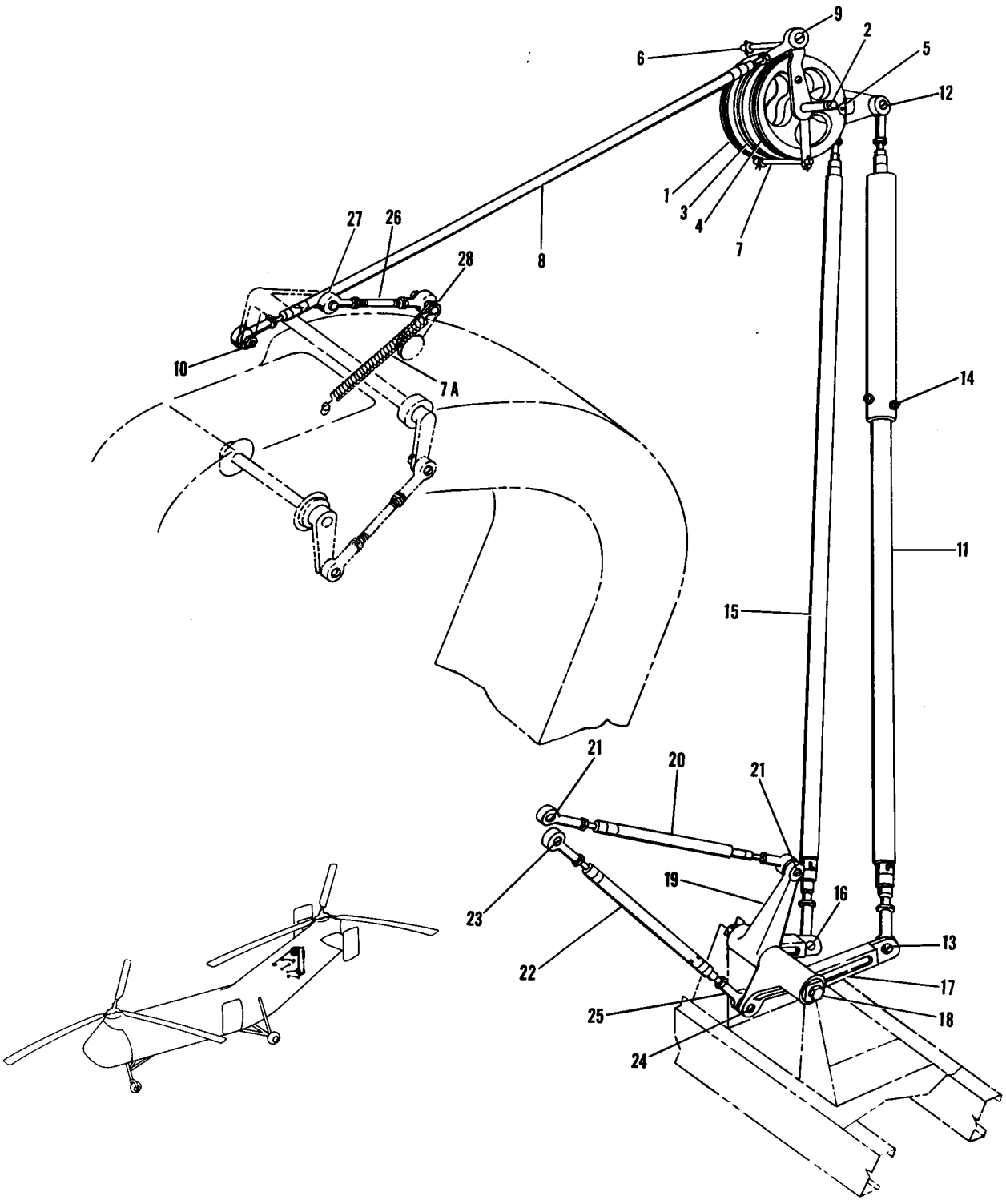

Figure 73. Engine Section Controls

Figure and Index Number	Part Number	Description 1 2 3 4 5 6 7	Units per Assembly	Usable On Code
73-	22C2300-1	CONTROLS INSTALLATION, Engine section	1	J
	42C2300-1	CONTROLS INSTALLATION, Engine section	1	AU
-1	22C2301-1	. QUADRANT ASSEMBLY, Carburetor heat	1	
		Attaching Parts		
-2	AN5-46	. BOLT	1	J
	AN5-47	. BOLT	1	AU
	AN381-2-16	. PIN, Cotter	1	
	AN320-5	. NUT	1	
	AN960D516	. WASHER	1	
	AN960D516L	. WASHER	1	
		———*———		
	22C2301-4	. . PULLEY	1	
	22C2313-1	. . ARM	1	
	AN218P5	. . BEARING	1	
	22C1753-67	. SPACER	1	
	22C1753-62	. SPACER	1	
	22C1753-61	. SPACER	1	
-3	22C2301-3	. QUADRANT ASSEMBLY, Throttle	1	J
	22C2301-9	. QUADRANT ASSEMBLY, Throttle	1	AU
	22C2301-4	. . PULLEY	1	
	22C2315-1	. . ARM	1	J
	42C2315-1	. . ARM	1	AU
	AN218P5	. . BEARING	1	
	22C1753-60	. SPACER	1	
-4	22C2301-6	. QUADRANT ASSEMBLY, Mixture	1	
	22C2301-10	. . PULLEY	1	
	22C2327-1	. . BUSHING	1	
	AN218P5	. . BEARING	1	
-5	22C2314-1	. GUARD, Cable	3	
		Attaching Parts		
	AN515-6-10	. SCREW	1	
	AN365-632	. NUT	1	
	AN960D6	. WASHER	3	
		———*———		
-6	22C1713-5	. PIN, Cable guard	1	J
-7	22C1713-4	. PIN, Cable guard	1	
■	22C1713-7	. PIN, Cable guard	1	AU
		Attaching Parts		
	AN381-2-8	. PIN, Cotter	2	
	AN960D10	. WASHER	2	
		———*———		
■ -7A	22P5064-1	. SPRING, Carburetor air duct	1	
-8	22C2338-3	. ROD ASSEMBLY, Carburetor heat	1	J
	22C2338-6	. ROD ASSEMBLY, Carburetor heat	1	AU
		Attaching Parts		
-9	AN24-18	. BOLT	1	
-10	AN24-20	. BOLT	1	J
	AN24-21	. BOLT	1	AU
	AN381-2-12	. PIN, Cotter	2	
	AN320-4	. NUT	2	
	AN960-416	. WASHER	2	
	AN960D416	. WASHER	2	
		———*———		
	RE4F5	. . BEARING, Rod end (FAF)	2	
	AN316-5R	. . NUT	1	
-11	22C2302-3	. TUBE ASSEMBLY, Throttle override	1	
		Attaching Parts		
-12	AN24-18	. BOLT	1	J
	AN24-20	. BOLT	1	AU
-13	AN24-20	. BOLT	1	J
	AN24-21	. BOLT	1	AU
	AN381-2-12	. PIN, Cotter	2	
	AN320-4	. NUT	2	

Figure and Index Number	Part Number	1 2 3 4 5 6 7 Description	Units per Assembly	Usable On Code
73-	AN960-416	. WASHER	2	AU
	AN960D416	. WASHER	2	
		———*———		
	22C2309-1	. . HOUSING ASSEMBLY	1	
	22C2331-3	. . TUBE ASSEMBLY	1	
		Attaching Parts		
-14	AN23-23	. . BOLT	2	
	AN381-2-10	. . PIN, Cotter	2	
	AN320-3	. . NUT	2	
	AN960D10L	. . WASHER	4	
		———*———		
	RE4F5	. . . BEARING, Rod end (FAF)	2	
	AN316-5R	. . . NUT	1	
	22C2311-3	. . TUBE ASSEMBLY, Inner	1	
	22C2321-1	. . . COLLAR	1	
	22C2321-2	. . . COLLAR	1	
	22C2312-1	. . . SPRING	1	
	22C2316-1	. . . PISTON	2	
	22C2317-1	. . . TUBE	1	
	1635	. . . QUICK DISCONNECT (DASI)	1	
-15	22C2330-7	. ROD ASSEMBLY, Mixture	1	J
	22C2330-8	. ROD ASSEMBLY, Mixture	1	AU
		Attaching Parts		
-16	AN24-20	. BOLT	1	J
	AN24-21	. BOLT	1	AU
	AN24-23	. BOLT	1	
	AN381-2-12	. PIN, Cotter	2	
	AN320-4	. NUT	2	
	AN960-416	. WASHER	2	AU
	AN960-416L	. WASHER	1	AU
	AN960D416	. WASHER	2	
		———*———		
	1635	. . QUICK DISCONNECT (DASI)	1	
	RE4F5	. . BEARING, Rod end (FAF)	2	
	AN316-5R	. . NUT	1	
-17	22C2308-1	. BELLCRANK ASSEMBLY, Throttle	1	J
	42C2308-5	. BELLCRANK ASSEMBLY, Throttle	1	AU
	or			
	42C2308-3	. BELLCRANK ASSEMBLY, Throttle	1	AU
	or			
	42C2308-1	. BELLCRANK ASSEMBLY, Throttle	1	AU
		Attaching Parts		
-18	AN4-53	. BOLT	1	J
	42C2328-1	. BOLT (Used with 42C2308-1 and -3)	1	
	AN5-53A	. BOLT (Used with 42C2308-5)	1	
	AN381-2-12	. PIN, Cotter	1	
	AN320-4	. NUT (Used with 22C2308-1 and 42C2308-1 and -3)	1	
	AN364-524C	. NUT, Self-locking (used with 42C2308-5)	1	
	AN960-416L	. WASHER	1	J
	AN960D416	. WASHER (Used with 42C2308-1 and -3)	1	
	AN960PD416	. WASHER	2	J
	AN960D516	. WASHER (Used with 42C2308-5)	1	
	AN960D516L	. WASHER (Used under hd of AN5-53A)	2	
	AN960D516L	. WASHER (Used under hd of 42C2328-1)	1	AU
		———*———		
	AN218P4	. . BEARING	1	J
	AN201KP5A	. . BEARING	2	AU
	NAS77-4-26	. . BUSHING	2	J
	NAS77-4-22	. . BUSHING	2	AU
	22C1622-7	. . BUSHING (Used with 42C2308-1)	2	
	22C2308-2	. . BELLCRANK	1	J
	42C2308-4	. . BELLCRANK (Used with 42C2308-3 and -5)	1	

Figure and Index Number	Part Number	Description 1 2 3 4 5 6 7	Units per Assembly	Usable On Code
73-	42C2308-2	. . BELLCRANK (Used with 42C2308-1)	1	
	22C1753-89	. . SPACER (Used with 42C2308-5)	1	
-19	22C2307-1	. BELLCRANK ASSEMBLY, Mixture	1	J
	42C2307-9	. BELLCRANK ASSEMBLY, Mixture	1	AU
	or			
	42C2307-7	. BELLCRANK ASSEMBLY, Mixture	1	AU
	or			
	42C2307-5	. BELLCRANK ASSEMBLY, Mixture	1	AU
	22C2307-2	. . BELLCRANK	1	J
	42C2307-4	. . BELLCRANK (Used with 42C2307-7 and -9)	1	
	42C2307-2	. . BELLCRANK (Used with 42C2307-5)	1	
	AN218P4	. . BEARING	1	J
	AN201KP5A	. . BEARING	2	AU
	NAS77-4-26	. . BUSHING	2	J
	NAS77-4-24	. . BUSHING	2	AU
	22C1622-7	. . BUSHING (Used with 42C2307-5)	2	
	22C1753-88	. . SPACER (Used with 42C2307-9)	1	
	22C1753-63	. SPACER	1	J
-20	22C2338-1	. ROD ASSEMBLY, Mixture	1	J
	22C2338-5	. ROD ASSEMBLY, Mixture	1	AU
		Attaching Parts		
-21	AN24-20	. BOLT	2	J
	AN24-20	. BOLT	1	AU
	AN24-21	. BOLT	1	AU
	AN381-2-12	. PIN, Cotter	2	
	AN320-4	. NUT	2	
	AN960-416	. WASHER	2	AU
	AN960D416	. WASHER	2	
		———*———		
	RE4F5	. . BEARING, Rod end (FAF)	2	
	AN316-5R	. . NUT	1	
-22	22C2338-2	. ROD ASSEMBLY, Throttle	1	J
	22C2338-4	. ROD ASSEMBLY, Throttle	1	AU
		Attaching Parts		
-23	AN24-17	. BOLT	1	J
	AN24-20	. BOLT	1	AU
-24	AN24-20	. BOLT	1	J
	AN24-21	. BOLT	1	AU
	AN381-2-12	. PIN, Cotter	2	
	AN320-4	. NUT	2	
	AN960-416	. WASHER	2	AU
	AN960D416	. WASHER	2	
		———*———		
-25	RE4F5	. . BEARING, Rod end (FAF)	2	
	AN316-5R	. . NUT	1	
-26	22C1028-21	. LINK ASSEMBLY, Carburetor heat	1	AU
		Attaching Parts		
-27	AN24-21	. BOLT	1	AU
-28	AN24-28	. BOLT	1	AU
	AN381-2-12	. PIN, Cotter	2	AU
	AN320-4	. NUT	2	AU
	AN960-416	. WASHER	2	AU
	AN960D416	. WASHER	1	AU
	AN960-416L	. WASHER	2	AU
	NAS43-4-10	. SPACER	1	AU
		———*———		
	FR4-5	. . BEARING, Rod end (SHA)	1	AU
	AN316-5R	. . NUT	1	AU
	22C1028-22	. . ROD ASSEMBLY	1	AU
	FR4-5	. . . BEARING, Rod end (SHA)	1	AU
	AN316-5R	. . . NUT	1	AU
	22C1028-23	. . . ROD	1	AU

Figure and Index Number	Part Number	1 2 3 4 5 6 7 Description	Units per Assembly	Usable On Code
73-		*Attaching Parts*		
-27	AN24-21	. BOLT	1	HJ
-28	AN24-28	. BOLT	1	HJ
	AN381-2-12	. PIN, Cotter	2	HJ
	AN320-4	. NUT	2	HJ
	AN960-416	. WASHER	2	HJ
	AN960D416	. WASHER	1	HJ
	AN960-416L	. WASHER	2	HJ
	NAS43-4-10	. SPACER	1	HJ
		———*———		
	FR4-5	. . BEARING, Rod end (SHA)	1	HJ
	AN316-5R	. . NUT	1	HJ
	22C1028-22	. . ROD ASSEMBLY	1	HJ
	FR4-5	. . . BEARING, Rod end (SHA)	1	HJ
	AN316-5R	. . . NUT	1	HJ
	22C1028-23	. . . ROD	1	HJ
-29	22C1028-13	. LINK ASSEMBLY	1	HJ
	FR4-5	. . BEARING, Rod end (SHA)	1	HJ
	AN316-5R	. . NUT	1	HJ
	22C1028-14	. . ROD ASSEMBLY	1	HJ
	FR4-5	. . . BEARING, Rod end (SHA)	1	HJ
	AN316-5R	. . . NUT	1	HJ
	22C1028-15	. . . ROD	1	HJ

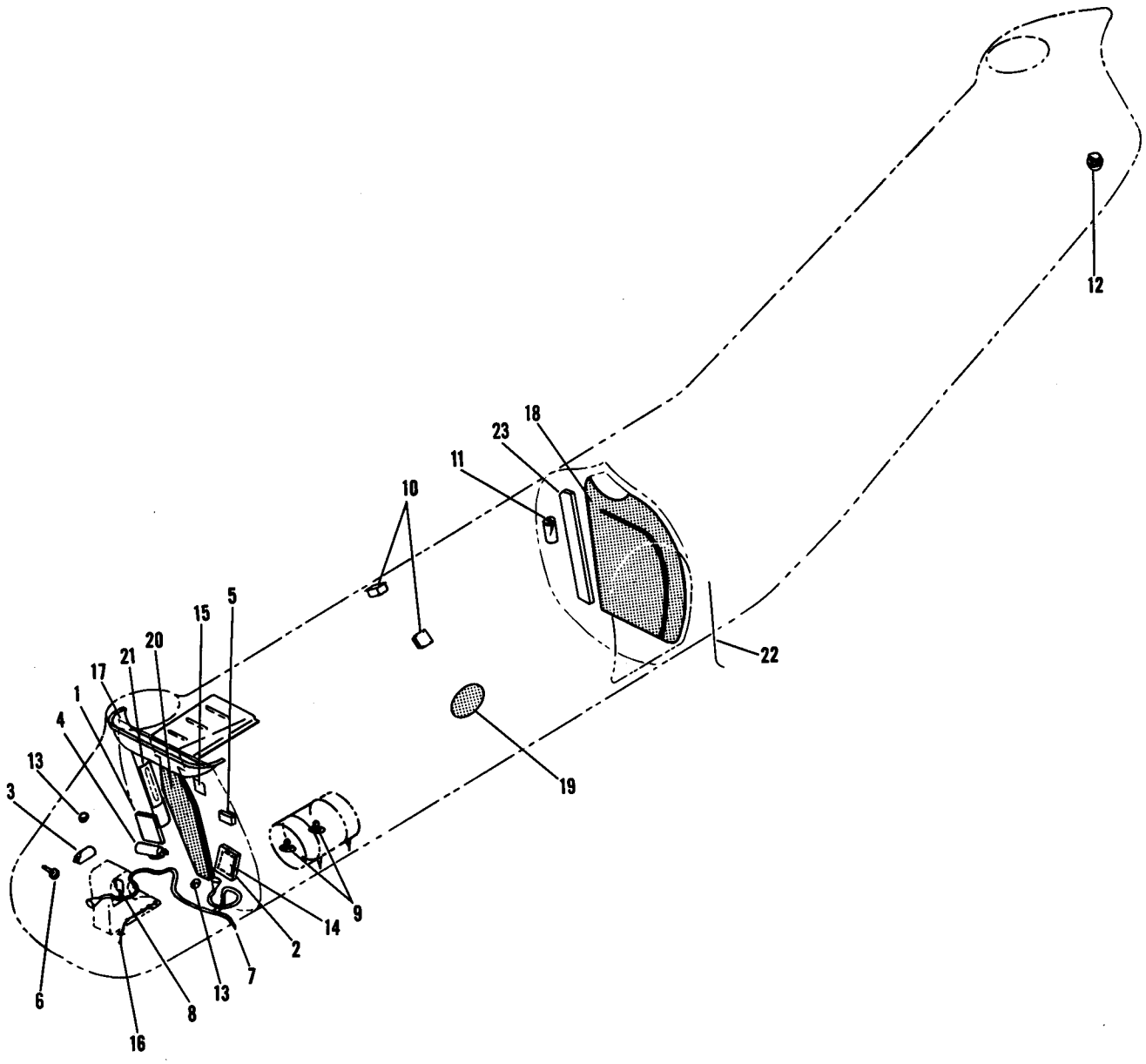

Figure 74. Miscellaneous Equipment

All data deleted from page 343

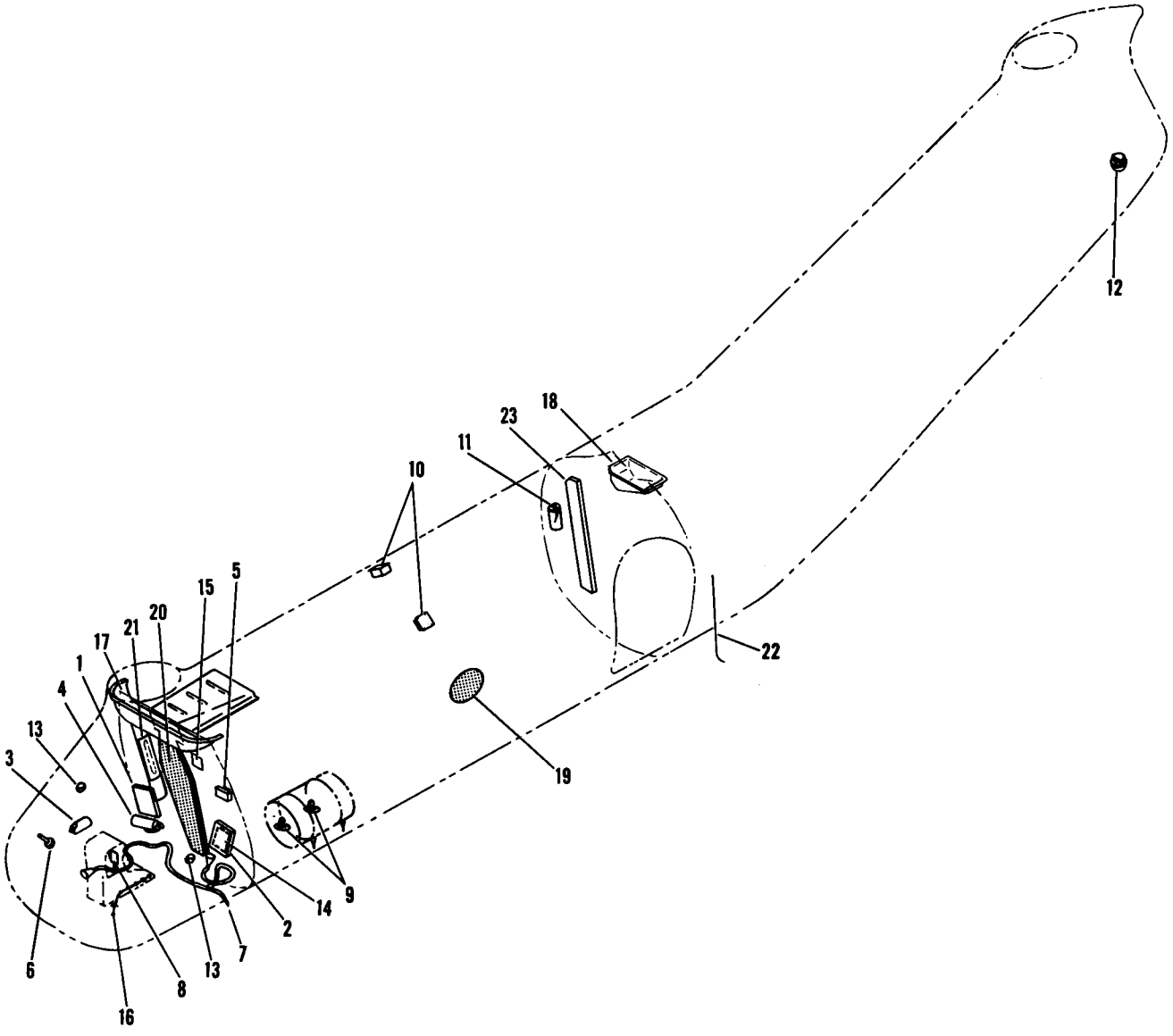

Figure 74. Miscellaneous Equipment

Figure and Index Number	Part Number	1 2 3 4 5 6 7 Description	Units per Assembly	Usable On Code
74-	22E0001-1	EQUIPMENT INSTALLATION	1	J
	42E0001-1	EQUIPMENT INSTALLATION	1	D
	43E0001-1	EQUIPMENT INSTALLATION	1	C
-1	22E4005-2	. CASE, Map (right side of cockpit)	1	J
	2071	. CASE, Map (alternate) (HTEC)	1	J
	36G2873	. CASE, Data (USAF dwg No.) (right side of cockpit)	1	AU
-2	36G2873	. CASE, Data (USAF dwg No.) (left side of cockpit)	1	J
	AN8011-1	. CASE, Map (left side of cockpit)	1	AU
-3	6970-1	. COMPASS, Magnetic (WR) (GFAE)	1	
	K-130-9	. . MOUNT, Instrument (RAI)	1	JS
■	K-130-13	. . MOUNT, Instrument (RAI)	1	JA,HI
-4	A20-0-51	. EXTINGUISHER, Type A-20 fire (STFI)	1	
	or			
	13X-13261	. EXTINGUISHER, Type A-20 fire (ALF)	1	
	A20-50T-55	. BRACKET (Used with A20-0-51)	1	
-5	9-196-650	. KIT, First aid (Medical Corps) (GFAE)	1	
■ -6	96362	. . THERMOMETER, Type C-13A free air (WS)	1	
-7	22E4011-1	. TUBE INSTALLATION, Relief	1	J
	42E4011-1	. TUBE INSTALLATION, Relief	1	AP
	42E4011-2	. TUBE INSTALLATION, Relief	1	AQ,D
	AN8018-1	. . HORN	2	J,AP
	203500	. . HORN ASSEMBLY, Relief tube (USAF dwg No.)	2	AQ,D
	or			
	WM-203	. . HORN ASSEMBLY (AA)	2	AQ,D
	AN8019-1	. . TEE	1	
	AN8020-1	. . BRACKET	1	J,AP
	AN8021-1	. . BRACKET	1	J,AP
	AN8021-1	. . BRACKET	2	AQ,D
	22E4011-2	. . TUBE, Pilot's	1	J
	42E4011-5	. . TUBE, Pilot's	1	AU
	22E4011-3	. . TUBE, Co-Pilot's	1	J
	42E4011-3	. . TUBE, Co-Pilot's	1	AU
	22E4011-4	. . TUBE, Drain	1	J
	42E4011-4	. . TUBE, Drain	1	DN
	42E4011-7	. . TUBE, Drain	1	EF,FK
	42E4011-8	. . TUBE, Drain	1	EF,FK
	42E4011-11	. . TUBE, Drain	1	DU
	AN742D12C	. . CLAMP	3	
	17E4011-3	. . DRAIN ASSEMBLY	1	DN
	42E4011-6	. . FITTING, Drain	1	EF,FK
	42E4011-10	. . . TUBE	1	EF,FK
	42E4011-9	. . . PLATE	1	EF,FK
	42E4011-12	. . PLATE	1	DU
	42E1162-1	. CHECK LIST INSTALLATION, Pilot's	1	AL
	42E1162-16	. CHECK LIST INSTALLATION, Pilot's	1	D,AN
	42E1162-19	. CHECK LIST INSTALLATION, Pilot's	1	J
-8	42E1162-2	. . COVER ASSEMBLY, Check list	1	AL
■	42E1162-23	. . COVER ASSEMBLY, Check list	1	D,AN
	or			
	42E1162-17	. . COVER ASSEMBLY, Check list	1	D,AN
	42E1162-18	. . COVER ASSEMBLY, Check list	1	J
	42E1186-1	. . . SPRING	1	
-9	22S4060-2	. FITTING ASSEMBLY, Life raft tie-down	3	J
	22E4004-1	. KIT INSTALLATION, Cabin first aid	1	J
	42E4004-1	. KIT INSTALLATION, Cabin first aid	1	AU
-10	9-196-650	. . KIT, First aid (Medical Corps) (GFAE)	2	J
	9-196-650	. . KIT, First aid (Medical Corps) (GFAE)	3	AU
	22E8001-1	. EXTINGUISHER INSTALLATION, Cabin fire	1	
-11	A20-0-51	. . EXTINGUISHER, Type A-20 fire (STFI)	1	
	or			
	13X-13261	. . EXTINGUISHER, Type A-20 fire (ALF)	1	
	A20-50T-55	. . BRACKET (Used with A20-0-51)	1	

Figure and Index Number	Part Number	Description 1 2 3 4 5 6 7	Units per Assembly	Usable On Code
74-12	22E1160-1	. TRANSMITTER INSTALLATION, Type C-2 remote compass	1	
	656767	. . COMPENSATOR, Remote compass (SPE) (GFAE)	1	
	664543C	. . TRANSMITTER, Type C-2 remote compass (SPE) (GFAE)	1	
	22E4198-1	. ASH TRAY INSTALLATION, Pilot's	1	B
	22E4198-2	. ASH TRAY INSTALLATION, Co-Pilot's	1	B
-13	1473	. . RECEIVER ASSEMBLY, Ash (WKL)	1	B
-14	42E1189-1	. LIST, Amplified check (stowed in data case)	1	
-15	22E4007-1	. DIAGRAM ASSEMBLY, Fuel system	1	J
	42E4007-1	. DIAGRAM ASSEMBLY, Fuel system	1	AU
	22E4160-1	. CONTROL INSTALLATION, Foot warmer	1	A
	42E4160-1	. CONTROL INSTALLATION, Lower defroster	1	W
	42E4160-8	. CONTROL INSTALLATION, Lower defroster	1	X
	42E4160-7	. CONTROL INSTALLATION, Lower defroster	1	AU
-16	F-21017-26	. . CONTROL (ARN)	1	A
	F-21025-1	. . CONTROL (ARN)	1	B
-17	22E4015-23	. PAN AND SUPPORT ASSEMBLY, Fwd drip	1	J
■	42E4015-3	. PAN AND SUPPORT ASSEMBLY, Fwd drip	1	AU
	22E4015-3	. PAN AND SUPPORT ASSEMBLY, Aft drip	1	J
	42E4015-4	. PAN AND SUPPORT ASSEMBLY, Aft drip	1	AU
	42E4016-1	. PAN INSTALLATION, Central transmission drip	1	D
■ -18	42E4019-5	. . PAN, Central transmission drip	1	D
	or			
	42E4019-1	. . PAN, Central transmission drip	1	D
-19	22E4017-2	. CURTAIN INSTALLATION, Window blackout	7	A
	42E4017-1	. CURTAIN ASSEMBLY, Window blackout	9	AU
	22E4017-1	. CURTAIN INSTALLATION, Cabin door blackout	2	AC
	22E4017-12	. CURTAIN INSTALLATION, Cabin door blackout	2	M,B
-20	42E4018-1	. CURTAIN INSTALLATION, Cockpit entrance anti-glare	1	AU
-21	22E4073-1	. GUARD INSTALLATION, Heater and controls	1	J,EC
	22E4073-2	. . GUARD ASSEMBLY, Heater and controls	1	J,EC
	42E4073-1	. GUARD INSTALLATION, Heater and controls	1	IU
	42E4073-2	. . GUARD ASSEMBLY, Heater and controls	1	IU
	42E4179-1	. STRAP INSTALLATION, Door	1	FB,FC
	42E4177-1	. . STRAP ASSEMBLY, Rescue door safety	1	HJ
	42E4177-8	. . STRAP ASSEMBLY, Rescue door safety	1	HI
	42E4177-2	. . STRAP ASSEMBLY, Cabin door safety	1	HJ
	42E4177-9	. . STRAP ASSEMBLY, Cabin door safety	1	HI
-22	22E2000-3	GROUND WIRE ASSEMBLY (Located on alighting gear fitting sta 407.833)	1	
		Attaching Parts		
	18E2028-6	BOLT	1	A
	42E2261-1	BOLT	1	B
	AN365D624	NUT	1	A
	AN364D428	NUT	1	B
	AN960D616L	WASHER (Under nut)	1	A
	AN960D416L	WASHER (Under nut)	1	B
	AN960D416	WASHER (Between wire and fitting)	1	B
		———*———		
-23	22S4074-1	SHIELD INSTALLATION, Cable	1	J
	22S4074-2	. SHIELD ASSEMBLY, Cable	1	J
	22S4074-15	SHIELD INSTALLATION, Cable	1	AU
	22S4074-16	. SHIELD ASSEMBLY, Cable	1	AU
	42E2241-5	DUCT ASSEMBLY, Cable	1	EW
	42E2241-7	DUCT ASSEMBLY, Cable	1	EI,EH
	42E2241-9	DUCT ASSEMBLY, Cable (alternate for 42E2241-5 and -7)	1	

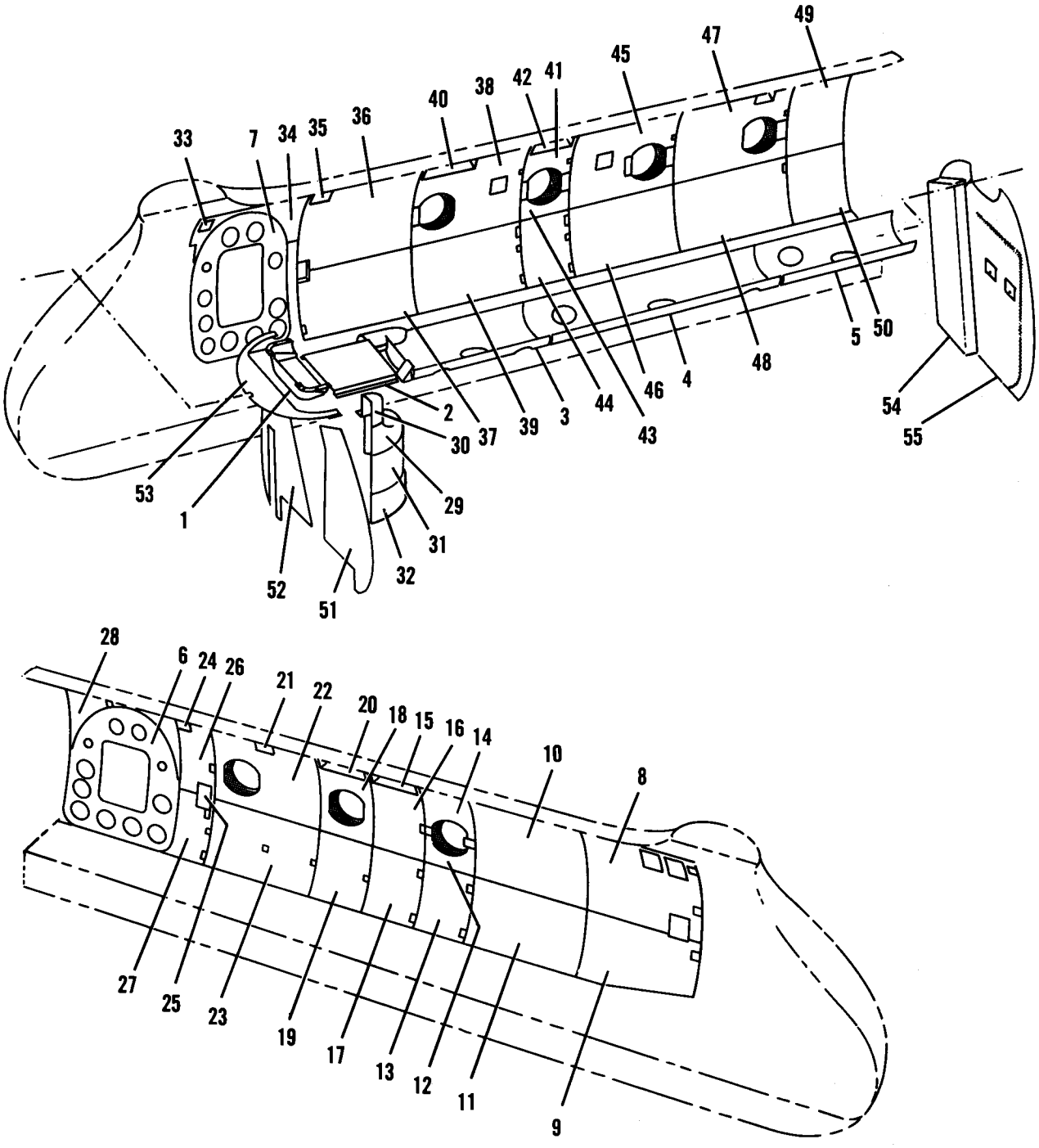

Figure 74A. Insulation Installation, YH-21 and H-21A

Figure and Index Number	Part Number	Description 1 2 3 4 5 6 7	Units per Assembly	Usable On Code
74A-	22E4010-2	INSULATION AND SOUNDPROOFING INSTALLATION	1	A
	22E4010-3	INSULATION AND SOUNDPROOFING INSTALLATION	1	BF
	22E4010-4	INSULATION AND SOUNDPROOFING INSTALLATION	1	BG
	22E4168-1	. INSULATION INSTALLATION, Drip pan fwd	1	J
	22E4168-2	. INSULATION INSTALLATION, Drip pan aft	1	J
-1	22E4168-9	. . BLANKET ASSEMBLY, Fwd	1	J
-2	22E4168-10	. . BLANKET ASSEMBLY, Aft	1	J
	22E4169-1	. INSULATION INSTALLATION, Cabin duct	1	J
-3	22E4169-2	. . BLANKET ASSEMBLY, Fwd	1	J
-4	22E4169-3	. . BLANKET ASSEMBLY, Center	1	J
-5	22E4169-4	. . BLANKET ASSEMBLY, Aft	1	J
-6	22E4170-3	. INSULATION INSTALLATION, Cabin door	1	J
-7	22E4170-4	. INSULATION INSTALLATION, Rescue door	1	J
	22E4170-1	. INSULATION INSTALLATION, Left side panels	1	J
	22E4170-212	. . PANEL ASSEMBLY, Insulation sta 119.500 to 159.500	1	J
-8	22E4170-19	. . . BLANKET ASSEMBLY, Upper	1	J
-9	22E4170-147	. . . BLANKET ASSEMBLY, Lower	1	J
	22E4170-213	. . PANEL ASSEMBLY, Insulation sta 159.500 to 199.500	1	J
-10	22E4170-17	. . . BLANKET ASSEMBLY, Upper	1	J
-11	22E4170-146	. . . BLANKET ASSEMBLY, Lower	1	J
	22E4170-214	. . PANEL ASSEMBLY, Insulation sta 199.500 to 219.500	1	J
-12	22E4170-13	. . . BLANKET ASSEMBLY, Upper	1	J
-13	22E4170-7	. . . BLANKET ASSEMBLY, Lower	1	J
-14	22E4170-203	. . BLANKET ASSEMBLY, Sta 199.500 to 219.500	1	J
	22E4170-215	. . PANEL ASSEMBLY, Insulation sta 219.500 to 239.500	1	J
-15	22E4170-243	. . . BLANKET ASSEMBLY, Recess	1	J
-16	22E4170-15	. . . BLANKET ASSEMBLY, Upper	1	J
-17	22E4170-145	. . . BLANKET ASSEMBLY, Lower	1	J
	22E4170-201	. . PANEL ASSEMBLY, Insulation sta 239.500 to 259.500	1	J
-18	22E4170-29	. . . BLANKET ASSEMBLY, Upper	1	J
-19	22E4170-148	. . . BLANKET ASSEMBLY, Lower	1	J
-20	22E4170-220	. . BLANKET ASSEMBLY, Escape hatch LH	1	J
	22E4170-216	. . PANEL ASSEMBLY, Insulation sta 259.500 to 299.500	1	J
-21	22E4170-226	. . . BLANKET ASSEMBLY, Recess	1	J
-22	22E4170-11	. . . BLANKET ASSEMBLY, Upper	1	J
-23	22E4170-144	. . . BLANKET ASSEMBLY, Lower	1	J
	22E4170-217	. . PANEL ASSEMBLY, Insulation sta 299.500 to 311.810	1	J
-24	22E4170-202	. . . BLANKET ASSEMBLY, Recess	1	J
-25	22E4170-244	. . . BLANKET ASSEMBLY, Recess	1	J
-26	22E4170-9	. . . BLANKET ASSEMBLY, Upper	1	J
-27	22E4170-143	. . . BLANKET ASSEMBLY, Lower	1	J
	22E4170-218	. . PANEL ASSEMBLY, Insulation sta 311.810 to 359.500	1	J
-28	22E4170-27	. . . BLANKET ASSEMBLY, Upper	1	J
	22E4170-2	. INSULATION INSTALLATION, Right side panels	1	J
-29	22E4170-272	. . BLANKET, Fwd cabin	1	J
-30	22E4170-102	. . BLANKET, Fwd cabin	1	J
-31	22E4170-104	. . BLANKET, Fwd cabin	1	J
-32	22E4170-106	. . BLANKET, Fwd cabin	1	J
	22E4170-211	. . PANEL ASSEMBLY, Insulation sta 119.500 to 159.500	1	J
-33	22E4170-229	. . . BLANKET ASSEMBLY, Recess	1	J
-34	22E4170-22	. . . BLANKET ASSEMBLY, Upper	1	J
	22E4170-210	. . PANEL ASSEMBLY, Insulation sta 159.500 to 199.500	1	J
-35	22E4170-245	. . . BLANKET ASSEMBLY, Recess	1	J
-36	22E4170-8	. . . BLANKET ASSEMBLY, Upper	1	J
-37	22E4170-138	. . . BLANKET ASSEMBLY, Lower	1	J
	22E4170-209	. . PANEL ASSEMBLY, Insulation sta 199.500 to 239.500	1	J
-38	22E4170-10	. . . BLANKET ASSEMBLY, Upper	1	J
-39	22E4170-139	. . . BLANKET ASSEMBLY, Lower	1	J
-40	22E4170-220	. . BLANKET ASSEMBLY, Escape hatch RH	1	J
-41	22E4170-204	. . BLANKET ASSEMBLY, Sta 239.500 to 259.500	1	J
-42	22E4170-228	. . . BLANKET ASSEMBLY, Recess	1	J
	22E4170-208	. . PANEL ASSEMBLY, Insulation sta 239.500 to 259.500	1	J

Figure and Index Number	Part Number	1 2 3 4 5 6 7 Description	Units per Assembly	Usable On Code
74A-43	22E4170-12	. . . BLANKET ASSEMBLY, Upper	1	J
-44	22E4170-20	. . . BLANKET ASSEMBLY, Lower	1	J
	22E4170-207	. . PANEL ASSEMBLY, Insulation sta 259.500 to 299.500	1	J
-45	22E4170-14	. . . BLANKET ASSEMBLY, Upper	1	J
-46	22E4170-140	. . . BLANKET ASSEMBLY, Lower	1	J
	22E4170-206	. . PANEL ASSEMBLY, Insulation sta 299.500 to 339.500	1	J
-47	22E4170-16	. . . BLANKET ASSEMBLY, Upper	1	J
-48	22E4170-141	. . . BLANKET ASSEMBLY, Lower	1	J
	22E4170-205	. . PANEL ASSEMBLY, Insulation sta 339.500 to 359.970	1	J
-49	22E4170-18	. . . BLANKET ASSEMBLY, Upper	1	J
-50	22E4170-142	. . . BLANKET ASSEMBLY, Lower	1	J
	22E4181-1	. INSULATION INSTALLATION, Pilot's enclosure	1	U
	22E4181-12	. INSULATION INSTALLATION, Pilot's enclosure	1	BT
	22E4181-14	. INSULATION INSTALLATION, Pilot's enclosure	1	E
-51	22E4181-2	. . BLANKET ASSEMBLY, LH	1	U
	22E4181-11	. . BLANKET ASSEMBLY, LH	1	BT,E
-52	22E4181-3	. . BLANKET ASSEMBLY, RH	1	U
	22E4181-10	. . BLANKET ASSEMBLY, RH	1	BT,E
-53	22E4181-6	. . BLANKET, Overhead	1	J
	22E4178-1	. INSULATION INSTALLATION, Cable shield sta 359.975	1	AS
	22E4178-6	. INSULATION INSTALLATION, Cable shield sta 359.975	1	BH
-54	22E4178-2	. . INSULATION ASSEMBLY, Cable shield	1	AS
	22E4178-7	. . INSULATION ASSEMBLY, Cable shield	1	BH
	22E4164-1	. CURTAIN INSTALLATION Sta 359.970	1	J
-55	22E4164-2	. . CURTAIN ASSEMBLY, Sta 359.970	1	J

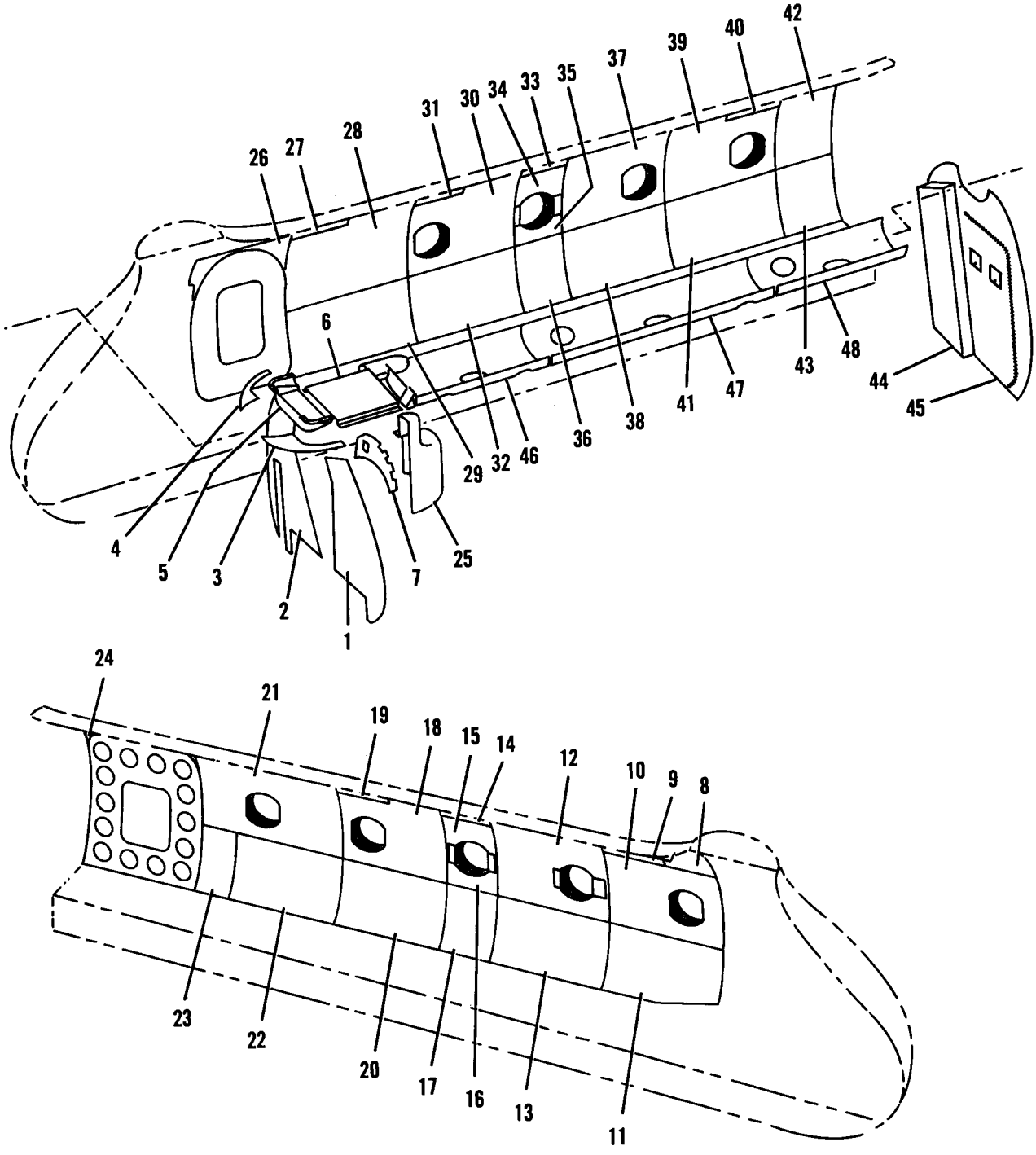

Figure 74B. Insulation Installation, H-21B and H-21C

Figure and Index Number	Part Number	Description 1 2 3 4 5 6 7	Units per Assembly	Usable On Code
74B-	42E4010-1	INSULATION AND SOUNDPROOFING INSTALLATION	1	AU
	42E4170-1	. INSULATION INSTALLATION, Door and side panel	1	HJ
	43E4200-1	. INSULATION INSTALLATION, Cabin	1	HI
	42E4181-1	. . INSULATION INSTALLATION, Pilot's enclosure	1	AU
-1	42E4181-2	. . . BLANKET ASSEMBLY, LH	1	ED
	42E4181-12	. . . BLANKET ASSEMBLY, LH	1	HP
	42E4181-14	. . . BLANKET ASSEMBLY, LH	1	HI
-2	42E4181-3	. . . BLANKET ASSEMBLY, RH	1	HJ
	42E4181-16	. . . BLANKET ASSEMBLY, RH	1	HI
-3	42E4181-6	. . . BLANKET, LH overhead	1	HJ
	42E4181-18	. . . BLANKET, LH overhead	1	HI
-4	42E4181-7	. . . BLANKET, RH overhead	1	HJ
	42E4181-17	. . . BLANKET, RH overhead	1	HI
-5	42E4015-24	. . BLANKET ASSEMBLY, Drip pan	1	HJ
	42E4015-51	. . BLANKET ASSEMBLY, Drip pan	1	HI
-6	42E4015-25	. . BLANKET ASSEMBLY, Drip pan	1	HJ
	42E4015-52	. . BLANKET ASSEMBLY, Drip pan	1	HI
	42E4170-3	. . INSULATION INSTALLATION, Door and side panel LH	1	HJ
	43E4200-3	. . INSULATION INSTALLATION, Cabin LH	1	HI
-7	42E4170-179	. . . BLANKET ASSEMBLY, Sta 119.500	1	HJ
	43E4200-27	. . . BLANKET ASSEMBLY, Sta 119.500	1	HI
-8	42E4170-47	. . . BLANKET ASSEMBLY, Sta 119.500 to 139.500	1	HJ
	43E4200-43	. . . BLANKET ASSEMBLY, Sta 119.500 to 139.500	1	HI
-9	42E4170-165	. . . BLANKET ASSEMBLY, Sta 139.500 to 159.500	1	AV
	42E4170-203	. . . BLANKET ASSEMBLY, Sta 139.500 to 159.500	1	HK
	43E4200-34	. . . BLANKET ASSEMBLY, Sta 139.500 to 159.500	1	HI
-10	42E4170-27	. . . BLANKET ASSEMBLY, Upper sta 119.500 to 159.500	1	AV
	42E4170-201	. . . BLANKET ASSEMBLY, Upper sta 119.500 to 159.500	1	HK
	43E4200-25	. . . BLANKET ASSEMBLY, Upper sta 119.500 to 159.500	1	HI
-11	42E4170-15	. . . BLANKET ASSEMBLY, Lower sta 119.500 to 159.500	1	HJ
	43E4200-13	. . . BLANKET ASSEMBLY, Lower sta 119.500 to 159.500	1	HI
-12	42E4170-25	. . . BLANKET ASSEMBLY, Upper sta 159.500 to 199.500	1	HJ
	43E4200-23	. . . BLANKET ASSEMBLY, Upper sta 159.500 to 199.500	1	HI
-13	42E4170-13	. . . BLANKET ASSEMBLY, Lower sta 159.500 to 199.500	1	HJ
	43E4200-11	. . . BLANKET ASSEMBLY, Lower sta 159.500 to 199.500	1	HI
-14	42E4170-34	. . . BLANKET ASSEMBLY, Sta 199.500 to 219.500	1	HJ
	43E4200-41	. . . BLANKET ASSEMBLY, Sta 199.500 to 219.500	1	HI
-15	42E4170-23	. . . BLANKET ASSEMBLY, Upper sta 199.500 to 219.500	1	HJ
	43E4200-21	. . . BLANKET ASSEMBLY, Upper sta 199.500 to 219.500	1	HI
-16	42E4170-161	. . . BLANKET ASSEMBLY, Center sta 199.500 to 219.500	1	HJ
	43E4200-28	. . . BLANKET ASSEMBLY, Center sta 199.500 to 219.500	1	HI
-17	42E4170-11	. . . BLANKET ASSEMBLY, Lower sta 199.500 to 219.500	1	HJ
	43E4200-9	. . . BLANKET ASSEMBLY, Lower sta 199.500 to 219.500	1	HI
-18	42E4170-21	. . . BLANKET ASSEMBLY, Upper sta 219.500 to 259.500	1	HJ
	43E4200-19	. . . BLANKET ASSEMBLY, Upper sta 219.500 to 259.500	1	HI
-19	42E4170-153	. . . BLANKET ASSEMBLY, Escape hatch	1	HJ
	43E4200-49	. . . BLANKET ASSEMBLY, Escape hatch	1	HI
-20	42E4170-9	. . . BLANKET ASSEMBLY, Lower sta 219.500 to 259.500	1	HJ
	43E4200-7	. . . BLANKET ASSEMBLY, Lower sta 219.500 to 259.500	1	HI
-21	42E4170-19	. . . BLANKET ASSEMBLY, Upper sta 259.500 to 311.810	1	AV
	42E4170-209	. . . BLANKET ASSEMBLY, Upper sta 259.500 to 311.810	1	HK
	43E4200-17	. . . BLANKET ASSEMBLY, Upper sta 259.500 to 311.810	1	HI
-22	42E4170-7	. . . BLANKET ASSEMBLY, Lower sta 259.500 to 299.500	1	HJ
	43E4200-5	. . . BLANKET ASSEMBLY, Lower sta 259.500 to 299.500	1	HI
-23	42E4170-177	. . . BLANKET ASSEMBLY, Lower sta 299.500 to 311.810	1	HJ
	43E4200-33	. . . BLANKET ASSEMBLY, Lower sta 299.500 to 311.810	1	HI
-24	42E4170-17	. . . BLANKET ASSEMBLY, Upper sta 311.810 to 359.800	1	HJ
	43E4200-15	. . . BLANKET ASSEMBLY, Upper sta 311.810 to 359.800	1	HI
	42E4170-4	. . INSULATION INSTALLATION, Door and side panel RH	1	HJ
	43E4200-4	. . INSULATION INSTALLATION, Cabin RH	1	HI
-25	42E4170-225	. . . BLANKET ASSEMBLY, Fwd	1	HJ
	43E4200-42	. . . BLANKET ASSEMBLY, Fwd	1	HI

Figure and Index Number	Part Number	Description (1 2 3 4 5 6 7)	Units per Assembly	Usable On Code
74B-26	42E4170-18	. . . BLANKET ASSEMBLY, Upper sta 119.500 to 159.500	1	HJ
	43E4200-16	. . . BLANKET ASSEMBLY, Upper sta 119.500 to 159.500	1	HI
-27	42E4170-46	. . . BLANKET ASSEMBLY, Upper sta 159.500 to 179.500	1	AV
	42E4170-213	. . . BLANKET ASSEMBLY, Upper sta 159.500 to 179.500	1	AW
	42E4170-207	. . . BLANKET ASSEMBLY, Upper sta 159.500 to 179.500	1	GG
	42E4170-239	. . . BLANKET ASSEMBLY, Upper sta 159.500 to 179.500	1	HQ
	43E4200-32	. . . BLANKET ASSEMBLY, Upper sta 159.500 to 179.500	1	HI
-28	42E4170-20	. . . BLANKET ASSEMBLY, Upper sta 159.500 to 199.500	1	AV
	42E4170-205	. . . BLANKET ASSEMBLY, Upper sta 159.500 to 199.500	1	HK
	43E4200-18	. . . BLANKET ASSEMBLY, Upper sta 159.500 to 199.500	1	HI
-29	42E4170-8	. . . BLANKET ASSEMBLY, Lower sta 159.500 to 199.500	1	HJ
	43E4200-6	. . . BLANKET ASSEMBLY, Lower sta 159.500 to 199.500	1	HI
-30	42E4170-22	. . . BLANKET ASSEMBLY, Upper sta 199.500 to 219.500	1	HJ
	43E4200-20	. . . BLANKET ASSEMBLY, Upper sta 199.500 to 219.500	1	HI
-31	42E4170-157	. . . BLANKET ASSEMBLY, RH escape hatch	1	HJ
	43E4200-50	. . . BLANKET ASSEMBLY, RH escape hatch	1	HI
-32	42E4170-10	. . . BLANKET ASSEMBLY, Lower sta 199.500 to 239.500	1	HJ
	43E4200-8	. . . BLANKET ASSEMBLY, Lower sta 199.500 to 239.500	1	HI
-33	42E4170-168	. . . BLANKET ASSEMBLY, Upper sta 239.500 to 259.500	1	HJ
	43E4200-36	. . . BLANKET ASSEMBLY, Upper sta 239.500 to 259.500	1	HI
-34	42E4170-24	. . . BLANKET ASSEMBLY, Upper sta 239.500 to 259.500	1	HJ
	43E4200-22	. . . BLANKET ASSEMBLY, Upper sta 239.500 to 259.500	1	HI
-35	42E4170-162	. . . BLANKET ASSEMBLY, Center sta 239.500 to 259.500	1	HJ
	43E4200-29	. . . BLANKET ASSEMBLY, Center sta 239.500 to 259.500	1	HI
-36	42E4170-12	. . . BLANKET ASSEMBLY, Lower sta 239.500 to 259.500	1	HJ
	43E4200-10	. . . BLANKET ASSEMBLY, Lower sta 239.500 to 259.500	1	HI
-37	42E4170-26	. . . BLANKET ASSEMBLY, Upper sta 259.500 to 299.500	1	HJ
	43E4200-24	. . . BLANKET ASSEMBLY, Upper sta 259.500 to 299.500	1	HI
-38	42E4170-14	. . . BLANKET ASSEMBLY, Lower sta 259.500 to 299.500	1	HJ
	43E4200-12	. . . BLANKET ASSEMBLY, Lower sta 259.500 to 299.500	1	HI
-39	42E4170-45	. . . BLANKET ASSEMBLY, Upper sta 299.500 to 339.500	1	HJ
	43E4200-31	. . . BLANKET ASSEMBLY, Upper sta 299.500 to 339.500	1	HI
-40	42E4170-166	. . . BLANKET ASSEMBLY, Upper sta 319.500 to 339.500	1	HJ
	43E4200-35	. . . BLANKET ASSEMBLY, Upper sta 319.500 to 339.500	1	HI
-41	42E4170-42	. . . BLANKET ASSEMBLY, Lower sta 299.500 to 339.500	1	HJ
	43E4200-30	. . . BLANKET ASSEMBLY, Lower sta 299.500 to 339.500	1	HI
-42	42E4170-28	. . . BLANKET ASSEMBLY, Upper sta 339.500 to 359.800	1	HJ
	43E4200-26	. . . BLANKET ASSEMBLY, Upper sta 339.500 to 359.800	1	HI
-43	42E4170-16	. . . BLANKET ASSEMBLY, Lower sta 339.500 to 359.800	1	HJ
	43E4200-14	. . . BLANKET ASSEMBLY, Lower sta 339.500 to 359.800	1	HI
	22E4178-8	. . . INSULATION INSTALLATION, Cable shield sta 359.975	1	HJ
	22E4178-10	. . . INSULATION INSTALLATION, Cable shield sta 359.975	1	HI
-44	22E4178-9	. . . . INSULATION ASSEMBLY, Cable shield	1	HJ
	22E4178-11	. . . . INSULATION ASSEMBLY, Cable shield	1	HI
	42E4164-1	. CURTAIN INSTALLATION, Sta 359.800	1	AU
-45	42E4164-2	. . CURTAIN ASSEMBLY, Sta 359.800	1	HJ
	42E4164-17	. . CURTAIN ASSEMBLY, Sta 359.800	1	HI
	22E4169-1	. INSULATION INSTALLATION, Cabin duct	1	AU
-46	22E4169-2	. . BLANKET ASSEMBLY, Fwd	1	HJ
	22E4169-9	. . BLANKET ASSEMBLY, Fwd	1	HI
-47	22E4169-3	. . BLANKET ASSEMBLY, Center	1	HJ
	22E4169-10	. . BLANKET ASSEMBLY, Center	1	HI
-48	22E4169-4	. . BLANKET ASSEMBLY, Aft	1	HJ
	22E4169-11	. . BLANKET ASSEMBLY, Aft	1	HI

Equipment

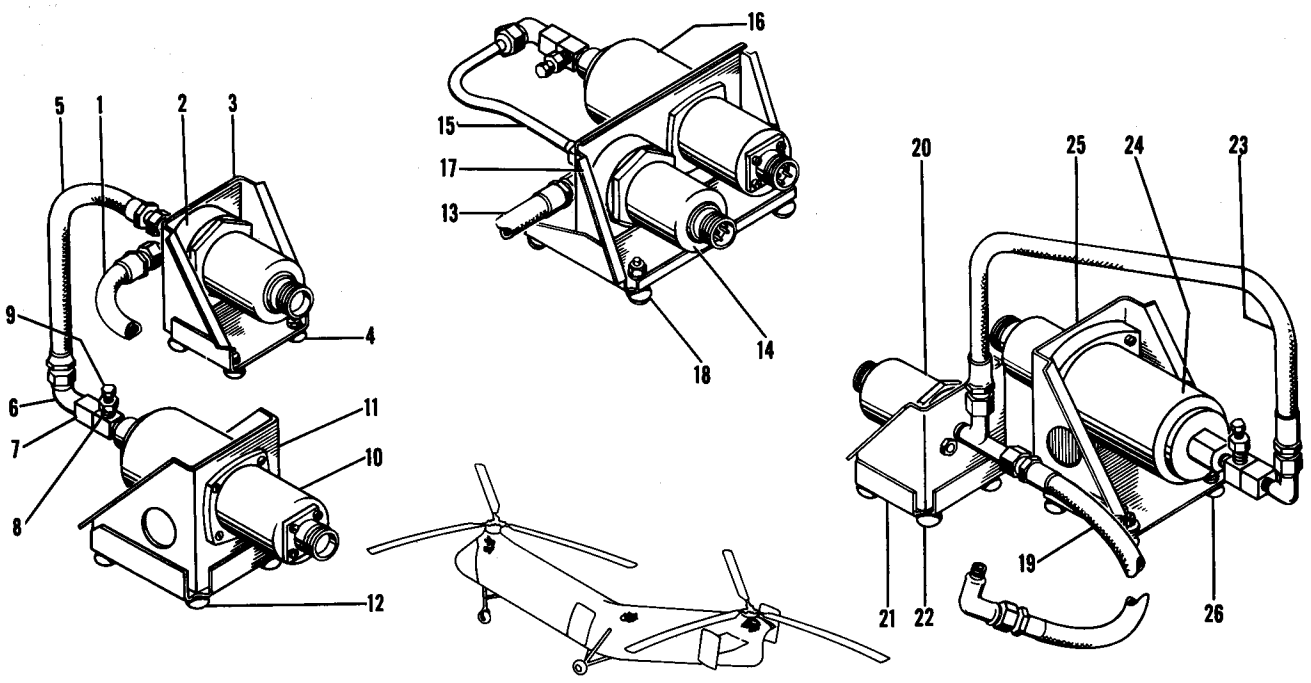

Figure 75. Transmission Oil Pressure Transmitters and Warning Units

Figure and Index Number	Part Number	Description 1 2 3 4 5 6 7	Units per Assembly	Usable On Code
75-	22E1175-2	TRANSMITTER AND WARNING UNIT INSTL, Fwd trans oil press...	1	
	or			
	22E1175-1	TRANSMITTER AND WARNING UNIT INSTL, Fwd trans oil press...	1	
-1	MS28741-4-0100	. HOSE ASSEMBLY	1	
	AN826-4D	. TEE	1	
-2	3149-1-A	. UNIT, Pressure warning (ECP)	1	
		Attaching Parts		
	AN365-1032	. NUT	2	
	AN960D10	. WASHER	2	
		———*———		
-3	22E1178-1	. SUPPORT ASSEMBLY	1	
		Attaching Parts		
	AN23-15A	. BOLT	4	
	AN364-1032	. NUT	4	
	AN960D10L	. WASHER	8	
		———*———		
-4	9510-K	. MOUNT, Instrument (orange and red stripe) (BLC)	4	
	or			
	275-1	. MOUNT, Instrument (orange stripe) (BLC)	4	
-5	MS28741-4-0120	. HOSE ASSEMBLY	1	
-6	AN822-4D	. ELBOW (Used with 22E1175-1)	1	
	AN916-1D	. ELBOW (Used with 22E1175-2)	1	
	AN816-4D	. NIPPLE (Used with 22E1175-2)	1	
-7	43A14984	. FITTING, Gage (USAF dwg No.)	1	
-8	AN5832-2	. VALVE	1	
-9	AN929-2	. CAP	1	
	17P4040-1	. RESTRICTOR (Used with 22E1175-2)	1	
	AN6290-4	. GASKET (Used with 22E1175-2)	1	

Figure and Index Number	Part Number	1 2 3 4 5 6 7 Description	Units per Assembly	Usable On Code
75-10	7601-2A5-1A	. TRANSMITTER, Oil pressure (ECP) (GFAE) (used with 22E1175-1)	1	
	7707-2A5-1	. TRANSMITTER, Oil pressure (ECP) (GFAE) (used with 22E1175-2)	1	
		Attaching Parts		
	AN500A6-12	. SCREW	4	
	AN960D6	. WASHER	4	
	AN995F32	. WIRE, Lock	AR	
		———*———		
-11	22E1178-3	. SUPPORT ASSEMBLY	1	
		Attaching Parts		
	AN23-15A	. BOLT	4	
	AN364-1032	. NUT	4	
	AN960D10L	. WASHER	8	
		———*———		
-12	9510-K	. MOUNT, Instrument (orange and red stripe) (BLC)	4	
	or			
	275-2	. MOUNT, Instrument (red stripe) (BLC)	4	
	22E1176-6	TRANSMITTER AND WARNING UNIT INSTL, Central trans oil press.	1	
	or			
	22E1176-1	TRANSMITTER AND WARNING UNIT INSTL, Central trans oil press.	1	
-13	MS28741-4-0176	. HOSE ASSEMBLY (Used with 22E1176-1)	1	
	MS28741-4-0194	. HOSE ASSEMBLY (Used with 22E1176-6)	1	
	AN826-4D	. TEE	1	
-14	3149-1-A	. UNIT, Pressure warning (ECP)	1	
-15	22E1176-4	. TUBE ASSEMBLY (Used with 22E1176-6)	1	
	or			
	22E1176-2	. TUBE ASSEMBLY (Used with 22E1176-1)	1	
	AN825-4D	. TEE (Used with 22E1176-1)	1	
	43A14984	. FITTING, Gage (USAF dwg No.)	1	
	AN917-1D	. TEE (Used with 22E1176-6)	1	
	AN816-4D	. NIPPLE (Used with 22E1176-6)	1	
	AN822-4D	. ELBOW (Used with 22E1176-6)	1	
	AN5832-2	. VALVE	1	
	AN929-2	. CAP	1	
	17P4040-1	. RESTRICTOR (Used with 22E1176-6)	1	
	AN6290-4	. GASKET (Used with 22E1176-6)	1	
-16	7601-2A5-1A	. TRANSMITTER, Oil pressure (ECP) (GFAE) (used with 22E1176-1)	1	
	7707-2A5-1	. TRANSMITTER, Oil pressure (ECP) (GFAE) (used with 22E1176-6)	1	
-17	22E1180-1	. SUPPORT ASSEMBLY	1	
		Attaching Parts		
	AN23-15A	. BOLT	4	
	AN365-1032	. NUT	4	
	AN960D10L	. WASHER	8	
		———*———		
-18	9510-K	. MOUNT, Instrument (orange and red stripe) (BLC)	4	
	or			
	275-4	. MOUNT, Instrument (yellow stripe) (BLC)	4	
	22E1177-2	TRANSMITTER AND WARNING UNIT INSTL, Aft trans oil press.	1	
	or			
	22E1177-1	TRANSMITTER AND WARNING UNIT INSTL, Aft trans oil press.	1	
-19	MS28741-4-0110	. HOSE ASSEMBLY	1	
	AN826-4D	. TEE	1	
-20	3149-1-A	. UNIT, Pressure warning (ECP)	1	
-21	22E1178-2	. SUPPORT ASSEMBLY	1	
		Attaching Parts		
	AN23-15A	. BOLT	4	
	AN364-1032	. NUT	4	
	AN960D10L	. WASHER	8	
		———*———		
-22	9510-K	. MOUNT, Instrument (orange and red stripe) (BLC)	4	
	or			
	275-1	. MOUNT, Instrument (orange stripe) (BLC)	4	

Figure and Index Number	Part Number	1 2 3 4 5 6 7 Description	Units per Assembly	Usable On Code
75-23	MS28741-4-0114	. HOSE ASSEMBLY	1	
	AN822-4D	. ELBOW (Used with 22E1177-1)	1	
	AN916-1D	. ELBOW (Used with 22E1177-2)	1	
	AN816-4D	. NIPPLE (Used with 22E1177-2)	1	
	43A14984	. FITTING, Gage (USAF dwg No.)	1	
	AN5832-2	. VALVE	1	
	AN929-2	. CAP	1	
	17P4040-1	. RESTRICTOR (Used with 22E1177-2)	1	
	AN6290-4	. GASKET (Used with 22E1177-2)	1	
-24	7601-2A5-1A	. TRANSMITTER, Oil pressure (ECP) (GFAE) (used with 22E1177-1)	1	
	7707-2A5-1	. TRANSMITTER, Oil pressure (ECP) (GFAE) (used with 22E1177-2)	1	
-25	22E1178-3	. SUPPORT ASSEMBLY	1	
		Attaching Parts		
	AN23-15A	. BOLT	4	
	AN364-1032	. NUT	4	
	AN960D10L	. WASHER	8	
		———*———		
-26	9510-K	. MOUNT, Instrument (orange and red stripe) (BLC)	4	
	or			
	275-2	. MOUNT, Instrument (red stripe) (BLC)	4	

Equipment

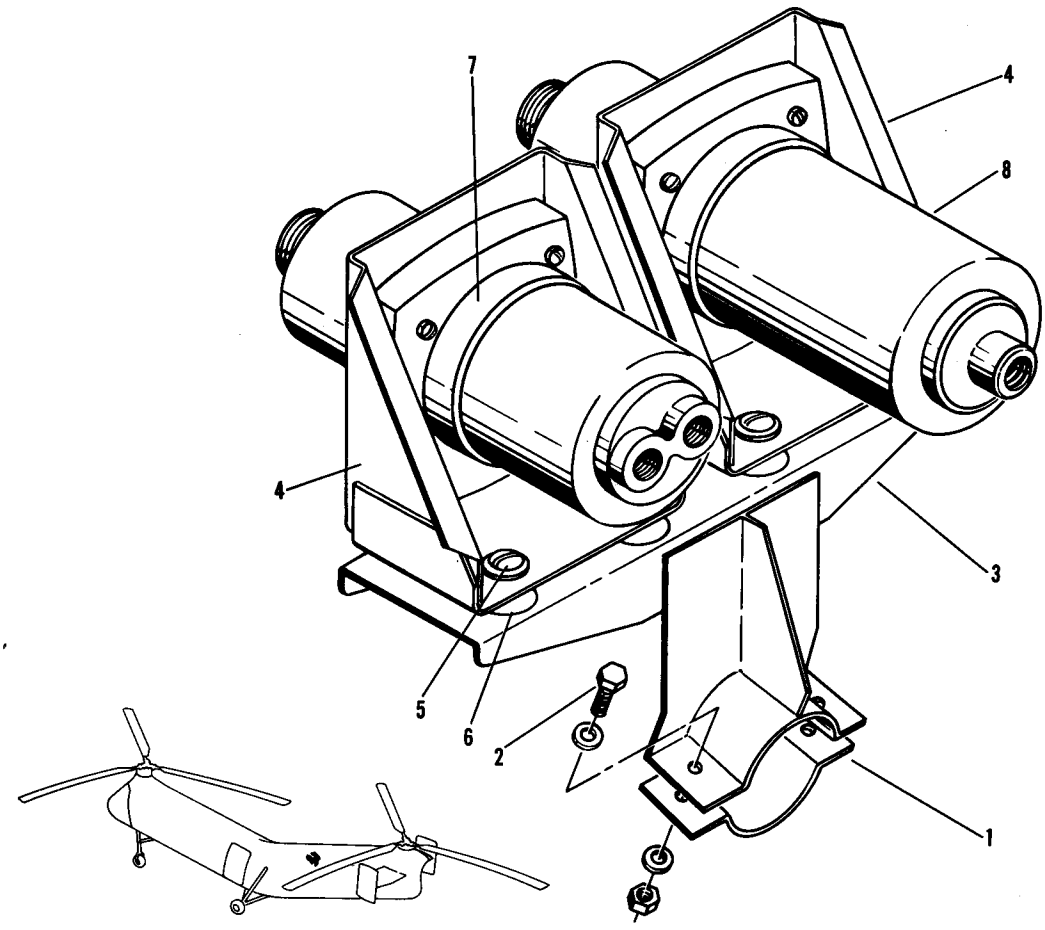

Figure 76. Fuel and Oil Pressure Transmitters

Figure and Index Number	Part Number	Description 1 2 3 4 5 6 7	Units per Assembly	Usable On Code
76-	22E1179-2	TRANSMITTER INSTALLATION, Fuel and oil pressure	1	
	or			
	22E1179-1	TRANSMITTER INSTALLATION, Fuel and oil pressure	1	
-1	22E4067-1	. CLAMP (Used with 22E4064-1)	2	
	22E4067-2	. CLAMP (Used with 22E4064-2)	2	
		Attaching Parts		
-2	AN4-4A	. BOLT	4	
	AN365-428	. NUT	4	
	AN960-416L	. WASHER	8	
		———*———		
-3	22E4064-1	. SUPPORT ASSEMBLY	1	
	or			
	22E4064-2	. SUPPORT ASSEMBLY	1	
-4	22E4063-1	. . BRACKET ASSEMBLY	2	
		Attaching Parts		
-5	AN23-14A	. . BOLT	8	
	AN365-1032	. . NUT	8	
	AN960D10L	. . WASHER	16	
		———*———		

Figure and Index Number	Part Number	1 2 3 4 5 6 7 Description	Units per Assembly	Usable On Code
76-6	9510-K	. . MOUNT, Instrument (orange and red stripe) (BLC)	8	
	or			
	275-2	. . MOUNT, Instrument (red stripe) (BLC)	8	
	22E4063-3	. . CHANNEL (Used with 22E4064-1)	1	
	22E4209-1	. . SUPPORT (Used with 22E4064-2)	1	
-7	7700-15A-5-2	. TRANSMITTER, Type M-1 fuel pressure (ECP) (GFAE)	1	
-8	7601-2A5-1A	. TRANSMITTER, Oil pressure (ECP) (GFAE) (used with 22E1179-1)	1	
	7707-2A5-1	. TRANSMITTER, Oil pressure (ECP) (GFAE) (used with 22E1179-2)	1	

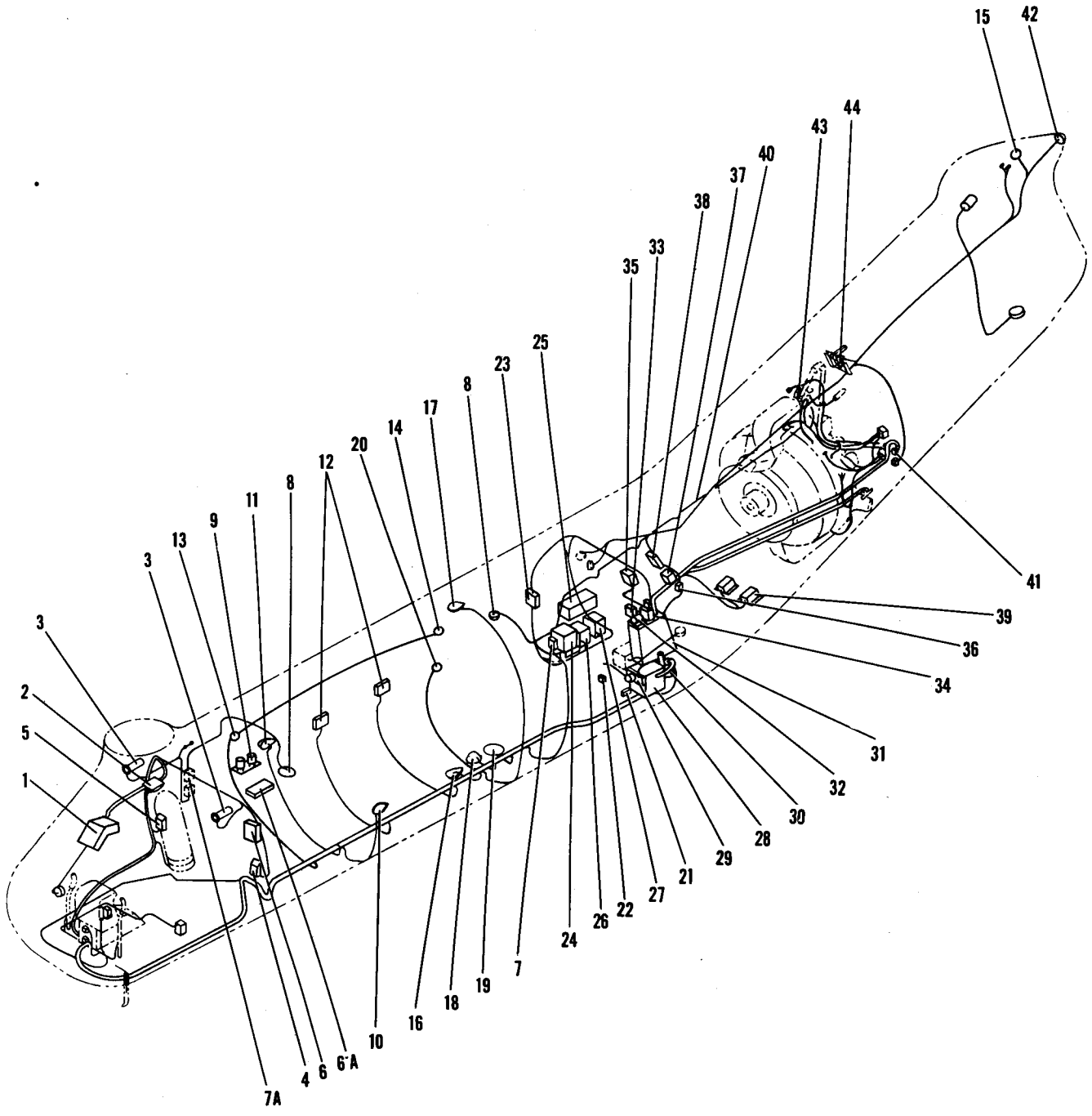

Figure 77. Electrical Equipment

Figure and Index Number	Part Number	Description 1 2 3 4 5 6 7	Units per Assembly	Usable On Code
77-	22E2000-1	EQUIPMENT INSTALLATION, Electrical	1	A
	22E2000-6	EQUIPMENT INSTALLATION, Electrical	1	E
	42E2000-1	EQUIPMENT INSTALLATION, Electrical	1	D
	43E2000-1	EQUIPMENT INSTALLATION, Electrical	1	C
-1	22E2040	. PANEL INSTALLATION, Overhead, see fig. 78*	Ref	
	42E2040	. PANEL INSTALLATION, Overhead, see fig. 78*	Ref	
-2	22E2023-1	. LIGHT INSTALLATION, Cockpit dome	1	J
	AN3400-4	. . LIGHT ASSEMBLY	1	J
		Attaching Parts		
	AN515-6-8	. . SCREW	4	
		———*———		
	AN3124-307	. . . LAMP	1	J
-3	22E2035-1	. FLOODLIGHT INSTALLATION, Cockpit	2	*
	86A75	. . LAMP, Type C-4A (SAI)	1	
-4	22E2027-1	. RHEOSTAT INSTALLATION, Heated clothing LH	1	U
	J-138	. . RHEOSTAT, Type Q-1B (Joleco Mfg, St Louis, Mo) (GFAE)	1	U
-5	22E2051-1	. RHEOSTAT INSTALLATION, Heated clothing RH	1	U
	J-138	. . RHEOSTAT, Type Q-1B (Joleco Mfg, St Louis, Mo) (GFAE)	1	U
	22E2114-1	. BOX INSTALLATION, Utility receptacle	1	BT,E
	22E2113-1	. . BOX ASSEMBLY, Utility receptacle	2	BT,E
	7526-1	. . . RECEPTACLE (HAW)	1	BT,E
-6	42E2076-1	. BOX INSTALLATION, Fuse	1	AU
	42E2211-1	. . BOX ASSEMBLY, Fuse	1	AU
	ACO-1	. . . FUSE (BUS)	9	AU
	49C6548-5	. . . BLOCK, Fuse (USAF dwg No.)	3	AU
-6A	42E2267-1	. RESISTOR INSTALLATION, Windshield wiper	1	HR
	42E2269-1	. . COVER	1	HR
	AR-200-3	. . RESISTOR (MODE)	1	HR
-7	22E2083-1	. SWITCH INSTALLATION, Cabin lights	1	J
	42E2097-1	. SWITCH INSTALLATION, Cabin lights	1	AU
	22E2082-1	. . COVER	1	
	AN3022-2	. . SWITCH	1	J
	AN3021-2	. . SWITCH	1	AU
-7A	42E2083-6	. PANEL INSTALLATION, Switch	1	BS
	42E2083-9	. PANEL INSTALLATION, Switch	1	BT,E
	42E2083-1	. PANEL INSTALLATION, Switch	1	AU
	42E2083-3	. . PANEL ASSEMBLY	1	
	AN3021-2	. . SWITCH	1	
	AN3021-7	. . SWITCH	1	
	AN3027-8	. . SWITCH	1	
	X646A	. . SWITCH ASSEMBLY, Selector control (GN)	1	
	or			
	X646	. . SWITCH ASSEMBLY, Selector control (GN)	1	
	52A4160	. . BUTTON, Selector switch (USAF dwg No.)	1	
	or			
	46A5122	. . BUTTON, Selector switch (USAF dwg No.)	1	
	CP29A1DF103M	. . CAPACITOR (CLD)	1	J
-8	22E2008-2	. LIGHT INSTALLATION, Cabin dome	1	G
	22E2008-3	. LIGHT INSTALLATION, Cabin dome	1	X,AU
	AN3037-7A	. . LIGHT ASSEMBLY, Cabin dome	2	AD
	AN3037-7A	. . LIGHT ASSEMBLY, Cabin dome	3	AG
		Attaching Parts		
	AN507-632R12	. . SCREW	6	
		———*———		
	AN3124-307	. . . LAMP	1	
-9	22E2085-1	. RELAY INSTALLATION, Hoist	1	
	AN3306-1	. . RELAY	2	
-10	22E2024-1	. LIGHT INSTALLATION, Navigation LH	1	J
	42E2024-1	. LIGHT INSTALLATION, Navigation LH	1	AU
-11	22E2024-2	. LIGHT INSTALLATION, Navigation RH	1	J
	42E2024-2	. LIGHT INSTALLATION, Navigation RH	1	AU
	AN3033-7	. . LIGHT ASSEMBLY, LH	1	
	AN3033-8	. . LIGHT ASSEMBLY, RH	1	

*For proper usable on codes and complete breakdown, see figure number as indicated.

Figure and Index Number	Part Number	1 2 3 4 5 6 7 Description	Units per Assembly	Usable On Code
77-		*Attaching Parts*		
	AN505-6R7	. . SCREW	3	J
	AN505-6R7	. . SCREW	2	AU
	AN505-6R8	. . SCREW	1	AU
	AN365D632	. . NUT	3	
	AN960D6L	. . WASHER	3	
		———*———		
	AN3122-1524	. . . LAMP	1	
	AN3042-3	. . . COVER, Red LH	1	
	AN3042-4	. . . COVER, Green RH	1	
	22E2028-1	. RECEPTACLE INSTALLATION, Heated blanket	1	J
-12	22E2028-2	. . RECEPTACLE ASSEMBLY, Heated blanket	2	J
	22E2028-3	. . . PLATE	1	J
	7526	. . . RECEPTACLE (HAW)	3	J
	42E2020-1	. LIGHT INSTALLATION, Formation	1	HJ
	42E2020-3	. LIGHT INSTALLATION, Formation	1	HI
-13	AN3030-8A	. . LIGHT ASSEMBLY, Green	1	AU
	AN3121-313	. . . LAMP	1	
	AN3040-4B	. . . COVER, Green	1	
-14	AN3030-5A	. . LIGHT ASSEMBLY, White	5	HJ
	AN3121-313	. . . LAMP	5	HJ
	AN3040-1B	. . . COVER, White	5	HJ
	AN3030-5A	. . LIGHT ASSEMBLY, White	4	HI
	AN3121-313	. . . LAMP	4	HI
	AN3040-1B	. . . COVER, White	4	HI
-15	AN3030-7A	. . LIGHT ASSEMBLY, Red	1	AU
	AN3121-313	. . . LAMP	1	
	AN3040-3B	. . . COVER, Red	1	
		Attaching Parts		
	AN505C440-10	. . SCREW	5	AU
		———*———		
	42E2133-1	. PLATE, Cover	7	D
-16	22E2044-101	. LIGHT INSTALLATION, Bottom navigation	1	J
	22E2044-1	. LIGHT INSTALLATION, Bottom navigation	1	AU
	AN3177-9	. . LIGHT ASSEMBLY	1	J
	AN3177-1	. . LIGHT ASSEMBLY	1	AU
		Attaching Parts		
	AN515-6R8	. . SCREW	6	
	AN960D6L	. . WASHER	6	
		———*———		
	AN3120-1047	. . . LAMP	1	
-17	22E2044-103	. LIGHT INSTALLATION, Top navigation	1	J
	22E2044-3	. LIGHT INSTALLATION, Top navigation	1	AU
	AN3177-9	. . LIGHT ASSEMBLY	1	J
	AN3177-3	. . LIGHT ASSEMBLY	1	AU
	AN3120-1047	. . . LAMP	1	
	22E2044-5	. . GASKET	1	
-18	22E2009-1	. LIGHT INSTALLATION, Fixed landing	1	
	AN3148-1	. . LIGHT ASSEMBLY	1	
	AN3130-4560	. . . LAMP	1	
-19	22E2010-2	. LIGHT INSTALLATION, Controllable search	1	S
	22E2010-3	. LIGHT INSTALLATION, Controllable search	1	T,E
	42E2010-1	. LIGHT INSTALLATION, Controllable search	1	CW,DV
	42E2010-2	. LIGHT INSTALLATION, Controllable search	1	BY
	42E2010-3	. LIGHT INSTALLATION, Controllable search	1	EG,EH
	G-5055A	. . LIGHT, Controllable landing (GMC)	1	
	or			
	G-5055	. . LIGHT, Controllable landing (GMC)	1	
		Attaching Parts		
	AN526-632R6	. . SCREW	16	J
	AN526-632R7	. . SCREW	16	AU

Figure and Index Number	Part Number	1 2 3 4 5 6 7 Description	Units per Assembly	Usable On Code
77-	AN960D6L	. . WASHER	16	
		———*———		
	AN3130-4560	. . . LAMP	1	
	42E4114-1	. . COVER	1	AU
	42E4114-2	. . PAN	1	AU
	42E4116-1	. . GASKET	1	AU
-20	22E2093-1	. LIGHT INSTALLATION, Litter	1	J
	42E2107-1	. LIGHT INSTALLATION, Litter	1	AU
	AN3030-5A	. . LIGHT ASSEMBLY	1	
		Attaching Parts		
	AN505C4-10	. . SCREW	5	
		———*———		
	AN3121-313	. . . LAMP	1	
	AN3021-2	. . SWITCH, Toggle	1	
	43E2155-1	. LIGHT INSTALLATION, Bottom anti-collision	1	HI
	43E2155-2	. LIGHT INSTALLATION, Top anti-collision	1	HI
		Attaching Parts		
	AN515-6R8	. SCREW	5	HI
	AN365-632	. NUT	5	HI
	AN960-6	. WASHER	5	HI
		———*———		
	G-7740-8-24	. . LIGHT (GMC)	1	HI
	A-7942	. . . LENS, Red (GMC)	1	HI
	A-7079-24	. . . LAMP (GMC)	2	HI
	A-6458	. . . MOTOR (GMC)	1	HI
	43E2155-3	. . GASKET	1	HI
-21	22E2017-1	. RECEPTACLE INSTALLATION, External power	1	J
	42E2017-1	. RECEPTACLE INSTALLATION, External power	1	AU
	22S4307-1	. . COVER	1	
	AN2552-3A	. . RECEPTACLE	1	
-22	42E2108-1	. OUTLET INSTALLATION, Utility	1	AU
	7526	. . RECEPTACLE (HAW)	1	AU
	22E2019-1	. EQUIPMENT INSTALLATION, Electrical sta 354 to sta 407	1	J
	42E2019-1	. EQUIPMENT INSTALLATION, Electrical sta 354 to sta 407	1	AU
-23	22E2056-1	. . BOX ASSEMBLY, J-2 compass junction	1	J
	22E2056-5	. . BOX ASSEMBLY, J-2 compass junction	1	AU
	22E2056-2	. . . BOX	1	
	22E2056-3	. . . COVER	1	
-24	673447	. . CONTROL, Directional gyro (SPE) (GFAE)	1	
-25	80383C	. . CONTROL, Vertical gyro (LECA) (GFAE)	1	
-26	653278	. . AMPLIFIER, 1-channel (SPE) (GFAE)	1	
-27	653822D	. . AMPLIFIER, 2-channel (SPE) (GFAE)	1	J
-28	AN3150-2	. . BATTERY, 24-volt storage	1	
	11749	. . RECEPTACLE, Battery (CED) (supplied with AN3150-2)	1	
-29	11751	. . PLUG, Battery (CED)	1	
-30	M-3253-2	. . LID, Battery sump (NOSC)	1	
	No number	. . MASON JAR, Round pint	1	
	No number	. . RING, Mason jar rubber	1	
	9555	. . ELBOW (HPL)	4	
	A5934-51	. . CLAMP (TIN)	2	
	22S4304-41	. . TUBE, Battery exhaust	1	
	22S4304-43	. . TUBE, Battery outlet	1	
	22S4304-45	. . TUBE, Battery inlet	1	
-31	22E2011-1	. . PANEL ASSEMBLY, Aft distribution box	1	J
	42E2011-1	. . PANEL ASSEMBLY, Aft distribution box	1	ED
	42E2011-4	. . PANEL ASSEMBLY, Aft distribution box	1	HP
■	42E2011-5	. . PANEL ASSEMBLY, Aft distribution box	1	HI
	AN3025-2	. . . RELAY, Reverse current (GFAE)	1	J,ED
	AN3025-2	. . . RELAY, Reverse current	1	DU
	RE-200-1	. . . RELAY, Overvoltage (TAAU) (GFAE)	1	J,FJ
	RE-200-1	. . . RELAY, Overvoltage (TAAU)	1	EH
	AN3370-2	. . . RELAY, 200 amp	2	

Figure and Index Number	Part Number	1 2 3 4 5 6 7 Description	Units per Assembly	Usable On Code
77-	AN3371-2	. . . RELAY, 200 amp	1	AU
	AN3350-2	. . . RELAY, 50 amp	4	J,ED
▌	AN3350-2	. . . RELAY, 50 amp	3	HP
▌	AN3350-2	. . . RELAY, 50 amp	5	HI
	AN3324-1	. . . RELAY, 25 amp	1	
	AN3316-1	. . . RELAY, 10 amp	1	
	AN3311-1	. . . RELAY, 10 amp	1	
	7264-404	. . . RELAY, Type B-8A (LR)	1	J
	22E2074-1	. . BREAKER INSTALLATION, Aft distribution box circuit	1	J
	42E2074-2	. . BREAKER INSTALLATION, Aft distribution box circuit	1	AL,D
	42E2074-3	. . BREAKER INSTALLATION, Aft distribution box circuit	1	GH
	42E2074-5	. . BREAKER INSTALLATION, Aft distribution box circuit	1	FF
	43E2074-3	. . BREAKER INSTALLATION, Aft distributon box circuit	1	HI
	AN3161P20	. . . BREAKER, Circuit	1	J
	MS25017-20	. . . BREAKER, Circuit (USAF dwg 49B6768-20)	3	AL,D
	MS25017-20	. . . BREAKER, Circuit (USAF dwg 49B6768-20)	1	AN
	AN3161P25	. . . BREAKER, Circuit	4	J
	MS25017-25	. . . BREAKER, Circuit (USAF dwg 49B6768-25)	3	HJ
	MS25017-25	. . . BREAKER, Circuit (USAF dwg 49B6768-25)	4	HI
	AN3161P35	. . . BREAKER, Circuit	3	J
	MS25017-35	. . . BREAKER, Circuit (USAF dwg 49B6768-35)	2	HJ
	MS25017-35	. . . BREAKER, Circuit (USAF dwg 49B6768-35)	4	HI
	AN3161P5	. . . BREAKER, Circuit	1	J
	MS25017-5	. . . BREAKER, Circuit (USAF dwg 49B6768-5)	3	D,GF
	MS25017-5	. . . BREAKER, Circuit (USAF dwg 49B6768-5)	4	FF
	AN3161P50	. . . BREAKER, Circuit	4	J
	MS25017-50	. . . BREAKER, Circuit (USAF dwg 49B6768-50)	1	AU
	MS25005-5	. . . BREAKER, Circuit	1	J
	MS25017-10	. . . BREAKER, Circuit (USAF dwg 49B6768-10)	1	AL,D
	MS25017-15	. . . BREAKER, Circuit (USAF dwg 49B6768-15)	1	AU
	22E2074-3	. . . COVER	1	J
-32	1042-17A	. . REGULATOR, Generator voltage (ECP)	1	
	22E2160-1	. . MOUNT, Shock	1	ED
	22E2160-2	. . MOUNT, Shock	2	
	22E2160-3	. . MOUNT, Shock	1	ED
	22E2160-4	. . MOUNT, Shock	2	DU
-33	1251A	. . RELAY, Generator field control (SMID)	1	
-34	164-02	. . AMPLIFIER (AVEN)	1	J,EM
	164-02-1	. . AMPLIFIER (AVEN)	1	EI,HQ
	1613-02-1	. . MOUNT, Shock (AVEN)	1	HJ
	9510-K	. . . MOUNT, Instrument (orange and red stripe) (BLC)	4	HJ
	or			
	275-5	. . . MOUNT, Instrument (BLC)	4	HJ
-35	166-02	. . BRIDGE UNIT, Fuel quantity gage (AVEN)	1	HJ
	166-07-270	. . CONDENSER, Plug-in type reference (AVEN)	1	HJ
-36	34368-D	. . CONTROL ASSEMBLY, Fire detector, see fig. 39 (EDI)	Ref	
-37	A100D	. . FLASHER, Position light type C-2 (PLL)	1	
-38	22E2030-1	. . BOX ASSEMBLY, AC	1	J
	42E2030-1	. . BOX ASSEMBLY, AC	1	AL,D
	42E2030-2	. . BOX ASSEMBLY, AC	1	AN
	666-154	. . . RELAY, Type A-1 inverter change-over (COE)	1	
	70G175	. . . TRANSFORMER (GE)	1	
	AN3311-1	. . . RELAY	1	
	22E2057-1	. . . BOX	1	
	22E2058-1	. . . COVER	1	
	42E2030-4	. . . HINGE, Half	2	
	AN3161P5	. . . BREAKER, Circuit	1	J
	A7701-1	. . . RELAY (ADE)	1	
	AN3307-1	. . . RELAY	1	
	22E2013-1	. INVERTER INSTALLATION	1	J
	42E2013-1	. INVERTER INSTALLATION	1	AU
■ -39	F16-4	. . INVERTER (JH) (GFAE)	1	

Figure and Index Number	Part Number	1 2 3 4 5 6 7 Description	Units per Assembly	Usable On Code
77-	F20-4	. . INVERTER (JH) (GFAE)	1	B
		Attaching Parts		
	AN3-4A	. . BOLT	4	
	AN365-1032	. . NUT	4	
	AN960D10L	. . WASHER	4	
		———*———		
-40	22E2107-1	. WIRE INSTALLATION, Ignition	1	J
	22E2107-4	. WIRE INSTALLATION, Ignition	1	D,GF
	22E2107-5	. WIRE INSTALLATION, Ignition	1	FF
	10-50585-2	. . FILTER (SNT)	1	
	56B25	. BULB, Electrical resistance type carb air temp (LEN) (GFAE)	1	
	156891	. BULB, Cyl hd temperature (WS) (GFAE)	1	
-41	22E2036-1	. DISCONNECT INSTALLATION, Engine electrical	1	
	MS91587	. . SHUNT, Ammeter	1	
	or			
	AN3200-400	. . SHUNT, Ammeter	1	
-42	22E2025-4	. LIGHT INSTALLATION, Aft navigation	1	
	4265A	. . LIGHT ASSEMBLY (GMC)	1	
		Attaching Parts		
	AN530-4R8	. . SCREW	2	
		———*———		
	1683	. . . LAMP (GE)	1	
-43	22E2062-1	. VIBRATOR AND CAPACITOR INSTALLATION	1	
	AN4114-1	. . VIBRATOR (GFAE)	1	
	or			
	AN4181-1	. . VIBRATOR (GFAE)	1	
	22E2166-1	. . ADAPTER (Used with AN4181-1)	1	
	148-1-0250	. . Y-COUPLING (BC) (Used with AN4181-1)	1	
	CP53B2DE105K	. . CAPACITOR (CLD)	1	
-44	42S2044-3	SWITCH ASSEMBLY, Starter cut-out overspeed	1	
	42E7073-1	. COVER	1	
	AN3167-1	. ACTUATOR	1	
	MS25026-1	. SWITCH, Plunger	1	
	43E2204-1	. BOX INSTALLATION, External tank relay	1	HI
	RG12-F-1	. . RELAY (MH)	1	HI
		Attaching Parts		
	AN520DD10R8	. . SCREW	4	
	AN365D1032	. . NUT	4	
	AN960D10L	. . WASHER	8	
		———*———		

Equipment

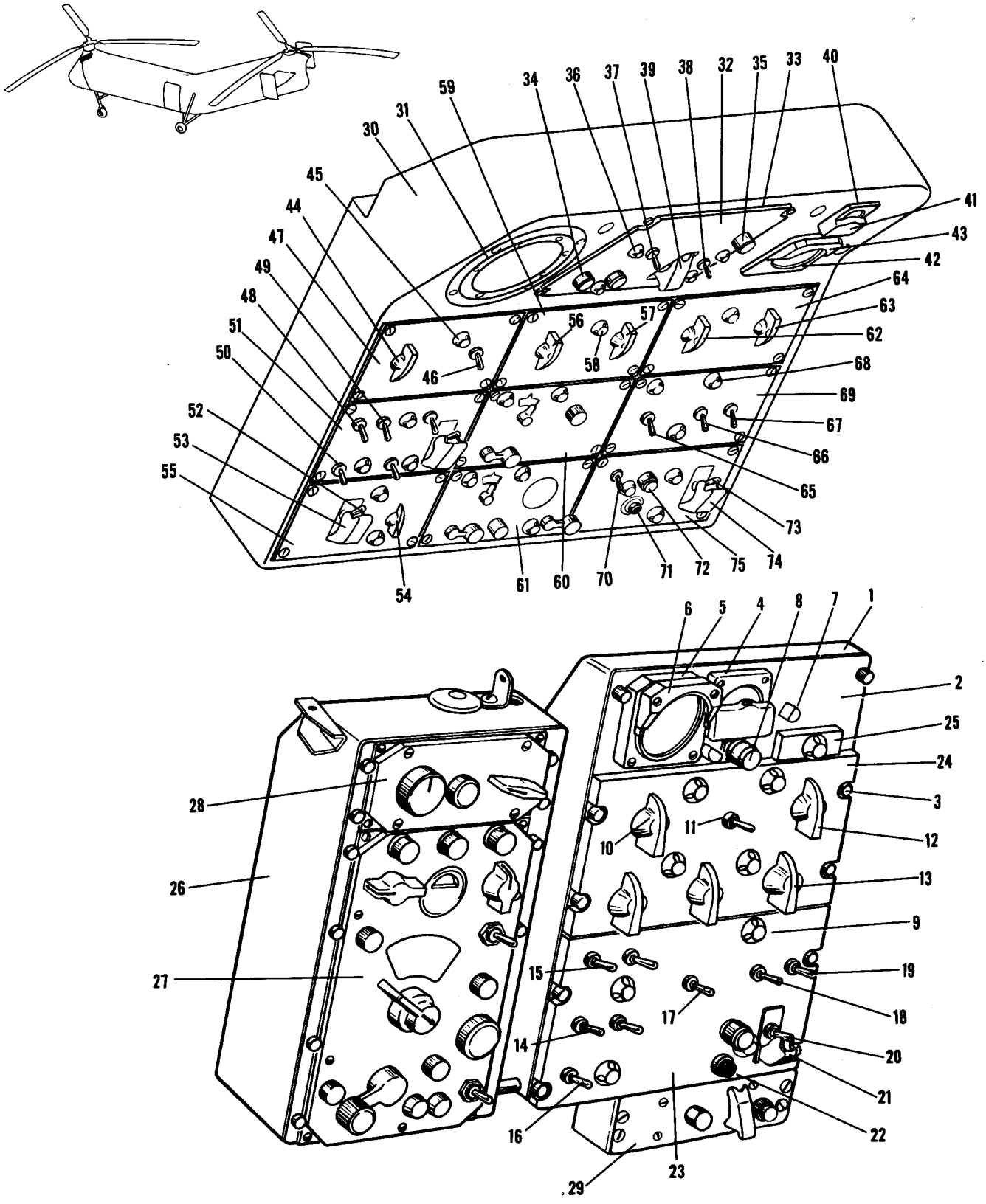

Figure 78. Overhead Panel

Figure and Index Number	Part Number	Description 1 2 3 4 5 6 7	Units per Assembly	Usable On Code
78-	22E2040-1	PANEL INSTALLATION, Overhead	1	AE
	22E2040-5	PANEL INSTALLATION, Overhead	1	AF
	22E2040-2	PANEL INSTALLATION, Overhead	1	T
	22E2040-4	PANEL INSTALLATION, Overhead	1	AX
	22E2040-6	PANEL INSTALLATION, Overhead	1	AY
	42E2040-2	PANEL INSTALLATION, Overhead	1	BK
	42E2040-4	PANEL INSTALLATION, Overhead	1	FI
	42E2040-1	PANEL INSTALLATION, Overhead	1	BO
	42E2040-3	PANEL INSTALLATION, Overhead	1	FK
-1	22E2072-1	. BOX ASSEMBLY, Switch	1	S,AY
	22E2072-7	. BOX ASSEMBLY, Switch	1	T,AX
	22E2071-1	. PANEL ASSEMBLY, Overhead switch	1	A
	22E2071-7	. PANEL ASSEMBLY, Overhead switch	1	E
	22E2071-2	. . EQUIPMENT ASSEMBLY, Panel	1	A
	22E2071-8	. . EQUIPMENT ASSEMBLY, Panel	1	E
	22E2071-3	. . . PANEL SUBASSEMBLY	1	A
	22E2071-9	. . . PANEL SUBASSEMBLY	1	E
-2	22E2069-1	. . . . PANEL	1	A
	22E2069-2	. . . . PANEL	1	E
		Attaching Parts		
-3	PC-3½	. . . . CUP (DZ)	10	
	PF-3½-38	. . . . FASTENER (DZ)	10	
	PS-3½	. . . . SPRING (DZ)	10	
		———*———		
-4	90702	. . . LOADMETER, Type J1-3 (RSM)	1	
	or			
	128308	. . . LOADMETER, Type J1-3 (WS)	1	
-5	AN3203-V30	. . . VOLTMETER	1	J
		Attaching Parts		
	AN507B632-14	. . . SCREW	2	
	AN515B6-12	. . . SCREW	6	
	A8938-632-24G	. . . NUT (TIN)	8	
		———*———		
-6	4750	. . . LIGHT, Instrument (GMC)	1	J
-7	5299-24	. . . LIGHT, Bayonet (GMC)	2	J
-8	AN3157-6	. . . LIGHT, Indicator	2	J
	AN3121-313	. . . LAMP	2	J
-9	5180-327	. . . LIGHT, Panel (GMC)	9	
	or			
	MS25010-1	. . . LIGHT, Panel	9	
-10	0317	. . . RHEOSTAT (Modified with stop position) (OM)	1	J
	NAS451-43	. . . BUTTON, Plug	1	A
-11	AN3021-3	. . . SWITCH	1	E
	22E2071-4	. . . RHEOSTAT ASSEMBLY	3	J
-12	CM-808	. . . . RHEOSTAT (CLR)	1	J
	AN3219-1	. . . . KNOB	1	J
	22E2071-5	. . . RHEOSTAT ASSEMBLY	1	J
-13	CM-814	. . . . RHEOSTAT (CLR)	1	J
	AN3219-1	. . . . KNOB	1	J
-14	AN3021-2	. . . SWITCH, Toggle	3	J
-15	AN3027-2	. . . SWITCH, Toggle	1	J
-16	AN3021-1	. . . SWITCH, Toggle	1	J
-17	AN3227-1	. . . SWITCH, Toggle	1	J
-18	AN3226-3	. . . SWITCH, Toggle	1	J
-19	AN3021-3	. . . SWITCH, Toggle	1	J
-20	AN3027-3	. . . SWITCH, Toggle	1	J
-21	AN3028-4	. . . GUARD, Switch	1	J
-22	C1006	. . . SWITCH, Button (RHS)	1	J
-23	22E2068-1	. . PANEL, Plastic	1	J
-24	22E2068-2	. . PANEL, Plastic	1	A
	22E2068-4	. . PANEL, Plastic	1	E

Figure and Index Number	Part Number	1 2 3 4 5 6 7 Description	Units per Assembly	Usable On Code
78-25	22E2068-3	. . PANEL, Plastic	1	J
-26	22E3054-1	. BOX ASSEMBLY, ARN-6	1	AE
	22E3054-2	. BOX ASSEMBLY, ARN-6	1	AF
	22E3054-3	. BOX ASSEMBLY, ARN-6	1	T,E
-27	C-403A/A	. PANEL, Control (S46D2635) (GFAE) (alternate for C760/A or C760A/A control panel)	1	J
	22E2040-3	. PLATE, Cover (used with ARN-14 only)	1	S,E
-28	C-700/AIC	. PANEL, Control (S50D2802) (GFAE)	1	J
-29	C-790/ARN-26	. PANEL, Control (S51C3059) (GFAE)	1	T,AX
	49C12550	. ADAPTER (Used with C-403A/A) (USAF dwg No.)	1	J
	49C12551	. ADAPTER (Used with C-700/AIC) (USAF dwg No.)	1	J
-30	42E2072-3	. BOX ASSEMBLY, Overhead	1	BK
	42E2072-8	. BOX ASSEMBLY, Overhead	1	FI
	42E2072-1	. BOX ASSEMBLY, Overhead	1	BO
	42E2072-9	. BOX ASSEMBLY, Overhead	1	FK
-31	AN3400-4	. . LIGHT, Dome	1	AU
		Attaching Parts		
	AN515-6R6	. . SCREW	4	AU
	AN365-632	. . NUT	4	AU
	AN960D6L	. . WASHER	4	AU
		———*———		
	42E2070-1	. . PANEL ASSEMBLY, Overhead	1	DY
-32	42E2060-8	. . . PANEL, Plastic	1	DY
-33	42E2062-1	. . . PANEL, Metal	1	DY
-34	AN3157-8	. . . LIGHT ASSEMBLY	1	DY
-35	AN3157-6	. . . LIGHT ASSEMBLY	2	DY
	AN3121-313	. . . LAMP	3	DY
-36	5180-327	. . . LIGHT, Panel (GMC)	4	DY
-37	AN3027-1	. . . SWITCH, Toggle	1	FJ
-38	AN3021-1	. . . SWITCH, Toggle	1	FJ
-39	AN3023-5	. . . SWITCH, Toggle	1	FJ
	8916K680	. . . GUARD, Switch (CUT) (USAF dwg 45A21662)	1	FJ
-40	90702	. . LOADMETER, Type J1-3 (RSM)	1	
	or			
	128308	. . LOADMETER, Type J1-3 (WS)	1	
-41	4613	. . LIGHT, Instrument (GMC)	1	AU
-42	AN3203-V30	. . VOLTMETER	1	AU
-43	4750	. . LIGHT, Instrument (GMC)	1	AU
	42E2092-1	. . PANEL ASSEMBLY, Overhead LH	1	DY
-44	AN3155-50-25	. . . RHEOSTAT	1	AU
-45	5180-327	. . . LIGHT, Panel (GMC)	6	AU
-46	AN3021-3	. . . SWITCH, Toggle	1	AU
-47	42E2060-1	. . . PANEL, Plastic	1	AU
-48	AN3027-2	. . . SWITCH, Toggle	1	FP,C
-49	AN3021-2	. . . SWITCH, Toggle	3	DY
-50	AN3021-1	. . . SWITCH, Toggle	1	AU
-51	42E2060-2	. . . PANEL, Plastic	1	DY
-52	AN3027-3	. . . SWITCH, Toggle	2	FP,C
-53	AN3028-1	. . . GUARD, Switch	2	FP,C
-54	AN3211-2	. . . SWITCH, Rotary	1	DY
	AN3220-3	. . . KNOB	2	DY
-55	42E2060-3	. . . PANEL, Plastic	1	AU
	42E2093-1	. . . PANEL, Metal	1	DY
	42E2046-1	. . PANEL ASSEMBLY, Overhead center	1	AU
-56	AN3155-50-50	. . . RHEOSTAT	1	AU
-57	AN3155-25-75	. . . RHEOSTAT	1	AU
-58	5180-327	. . . LIGHT, Panel (GMC)	1	AU
	AN3220-3	. . . KNOB	2	AU
-59	42E2060-7	. . . PANEL, Plastic	1	AU
	42E2247-1	. . . PANEL, Metal	1	AU
-60	R-4001	. . PANEL, VHF receiver radio control (JOHJ)	1	C
	42E2072-5	. . COVER	1	D

Figure and Index Number	Part Number	1 2 3 4 5 6 7 Description	Units per Assembly	Usable On Code
78-61	R-4003	. . PANEL, LF range and loop radio control (JOHJ)	1	DY
	42E2071-1	. . PANEL ASSEMBLY, Overhead RH	1	DY
-62	AN3155-25-50	. . . RHEOSTAT	1	AU
-63	0317	. . . RHEOSTAT (OM)	1	AU
-64	42E2060-4	. . . PANEL, Plastic	1	AU
-65	AN3227-1	. . . SWITCH, Toggle	1	DY
-66	AN3226-3	. . . SWITCH, Toggle	1	DY
-67	AN3021-1	. . . SWITCH, Toggle	1	AU
-68	5180-327	. . . LIGHT, Panel (GMC)	7	AU
-69	42E2060-5	. . . PANEL, Plastic	1	AU
-70	AN3021-3	. . . SWITCH, Toggle	1	AU
-71	W101W4	. . . SWITCH, Button (RHS)	1	AU
-72	AN3157-6	. . . LIGHT ASSEMBLY	1	FP,C
-73	AN3027-3	. . . SWITCH, Toggle	1	DY
-74	AN3028-1	. . . GUARD, Switch	1	DY
-75	42E2060-6	. . . PANEL, Plastic	1	FP,C
	42E2069-1	. . . PANEL, Metal	1	FP,C
	6104	. . HARDWARE AND BRACKETS (OM)	1	BK,BO
	RW15J310	. . RESISTOR, Formation light	1	AU
	RW15J250	. . RESISTOR, Tail light	1	AU
	RW15J140	. . RESISTOR, Side light	1	AU
	42E2073-1	. . BASE, Resistor	1	AU

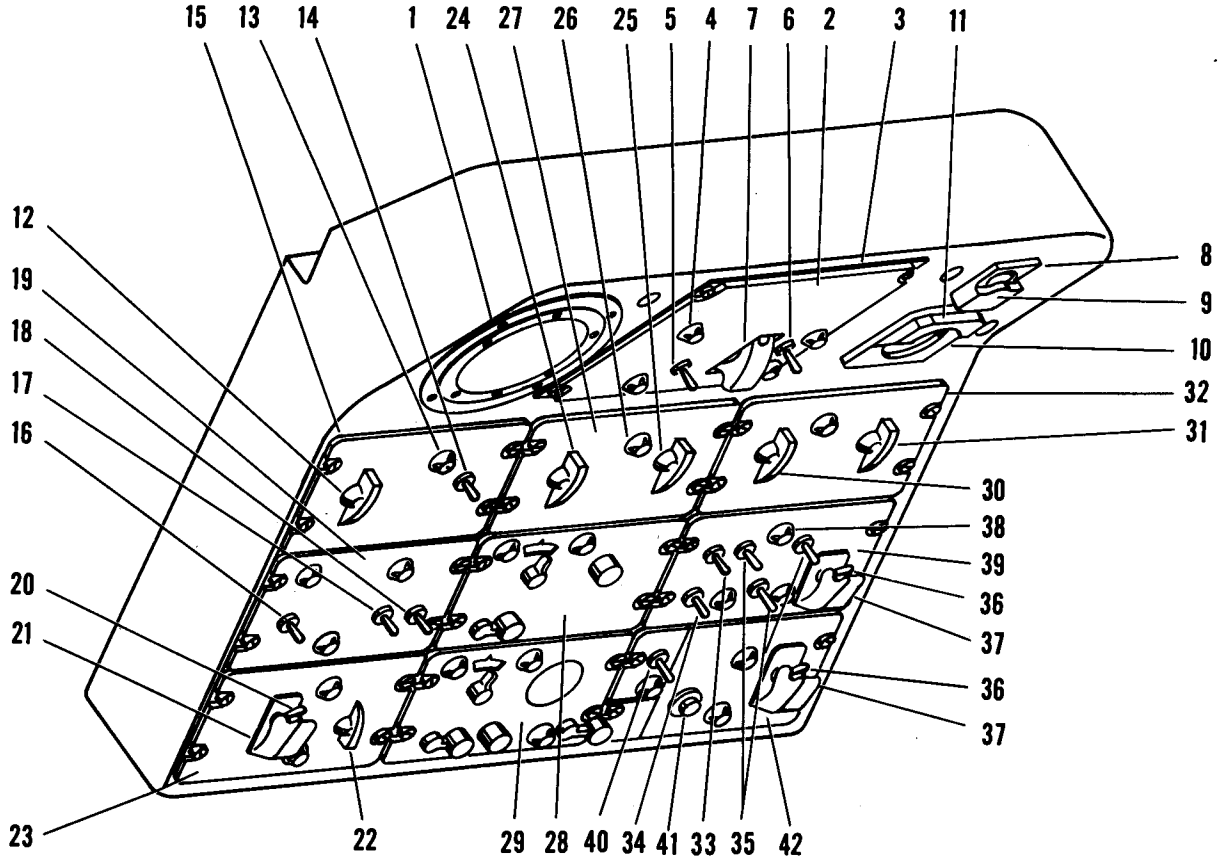

Figure 78A. Overhead Panel, H-21B 53-4346 thru 53-4402, 54-4000 thru 54-4008, and 55-5127 thru 55-5131

Figure and Index Number	Part Number	Description 1 2 3 4 5 6 7	Units per Assembly	Usable On Code
78A-	42E2040-5	PANEL INSTALLATION, Overhead	1	FQ
	42E2072-10	. BOX ASSEMBLY, Overhead	1	FQ
-1	AN3400-4	. . LIGHT, Dome	1	AU
		Attaching Parts		
	AN515-6R6	. . SCREW	4	AU
	AN365-632	. . NUT	4	AU
	AN960D6L	. . WASHER	4	AU
		*		
	42E2119-1	. . PANEL ASSEMBLY, Overhead	1	FQ
-2	42E2060-10	. . . PANEL, Plastic	1	FQ
-3	42E2118-1	. . . PANEL, Metal	1	FQ
-4	5890-327	. . . LIGHT, Panel (GMC)	4	FQ
-5	AN3027-1	. . . SWITCH, Toggle	1	AU
-6	AN3021-1	. . . SWITCH, Toggle	1	AU

Figure and Index Number	Part Number	Description 1 2 3 4 5 6 7	Units per Assembly	Usable On Code
78A-7	AN3023-5	. . . SWITCH, Toggle	1	AU
.	8916K680	. . . GUARD, Switch (CUT) (USAF dwg 45A21662)	1	AU
-8	90702	. . LOADMETER, Type J1-3 (RSM)	1	
	or			
	128308	. . LOADMETER, Type J1-3 (WS)	1	
-9	4613	. . LIGHT, Instrument (GMC)	1	AU
-10	AN3203-V30	. . VOLTMETER	1	AU
-11	4750	. . LIGHT, Instrument (GMC)	1	AU
	42E2117-1	. . PANEL ASSEMBLY, Overhead LH	1	FQ
-12	AN3155-50-25	. . . RHEOSTAT	1	AU
-13	5180-327	. . . LIGHT, Panel (GMC)	6	AU
-14	AN3021-3	. . . SWITCH, Toggle	1	AU
-15	42E2060-1	. . . PANEL, Plastic	1	AU
-16	AN3227-1	. . . SWITCH, Toggle	1	FQ
-17	AN3226-3	. . . SWITCH, Toggle	1	FQ
-18	AN3021-1	. . . SWITCH, Toggle	1	AU
-19	42E2060-5	. . . PANEL, Plastic	1	FQ,EH
-20	AN3027-3	. . . SWITCH, Toggle	1	FQ
-21	AN3028-1	. . . GUARD, Switch	1	FQ
-22	AN3211-2	. . . SWITCH, Rotary	1	AU
	AN3220-3	. . . KNOB	2	AU
-23	42E2060-3	. . . PANEL, Plastic	1	AU
	42E2115-1	. . . PANEL, Metal	1	FQ
	42E2046-1	. . PANEL ASSEMBLY, Overhead center	1	AU
-24	AN3155-50-50	. . . RHEOSTAT	1	AU
-25	AN3155-25-75	. . . RHEOSTAT	1	AU
-26	5180-327	. . . LIGHT, Panel (GMC)	1	AU
	AN3219-1	. . . KNOB	2	AU
-27	42E2060-7	. . . PANEL, Plastic	1	AU
	42E2247-1	. . . PANEL, Metal	1	AU
-28	42E2072-5	. . COVER	1	D
-29	R-4003	. . PANEL, LF range and loop radio control (JOHJ)	1	FJ
	42E2116-1	. . PANEL ASSEMBLY, Overhead RH	1	FQ,EH
-30	AN3155-25-50	. . . RHEOSTAT	1	AU
-31	0317	. . . RHEOSTAT (OM)	1	AU
	AN3219-1	. . . KNOB	2	FQ,EH
-32	42E2060-4	. . . PANEL, Plastic	1	AU
-33	AN3027-2	. . . SWITCH, Toggle	1	FQ,EH
-34	AN3021-1	. . . SWITCH, Toggle	1	AU
-35	AN3021-2	. . . SWITCH, Toggle	3	FQ,EH
-36	AN3027-3	. . . SWITCH, Toggle	2	FQ,EH
-37	AN3028-1	. . . GUARD, Switch	2	FQ,EH
-38	MS25010-1	. . . LIGHT, Panel	7	AU
-39	42E2060-2	. . . PANEL, Plastic	1	FQ,EH
-40	AN3021-3	. . . SWITCH, Toggle	1	AU
-41	W101W4	. . . SWITCH, Button (RHS)	1	AU
-42	42E2060-9	. . . PANEL, Plastic	1	FQ,EH
	42E2114-1	. . . PANEL, Metal	1	FQ,EH
	RW15J310	. . RESISTOR, Formation light	1	FJ
	RW15J250	. . RESISTOR, Tail light	1	FJ
	RW15J140	. . RESISTOR, Side light	1	FJ
	42E2073-1	. . BASE, Resistor	1	FJ

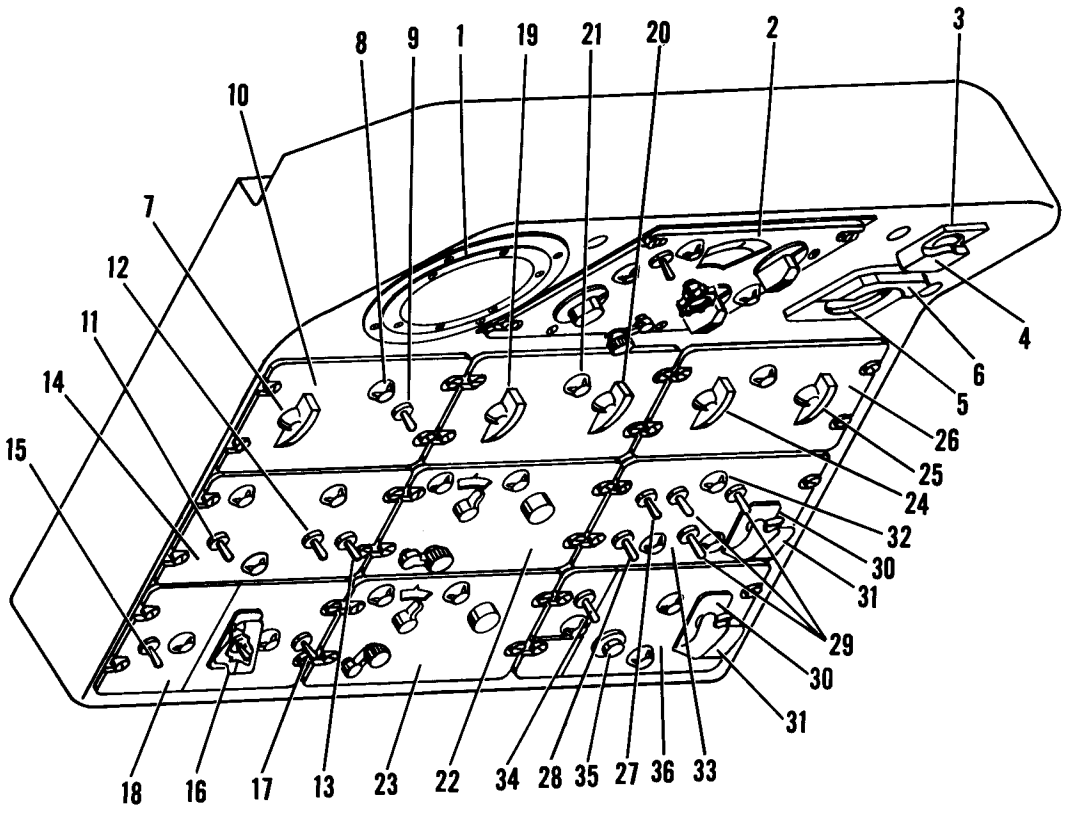

Figure 78B. Overhead Panel, H-21C 55-4132 thru 55-4221

Figure and Index Number	Part Number	Description 1 2 3 4 5 6 7	Units per Assembly	Usable On Code
78B-	42E2040-6	PANEL INSTALLATION, Overhead	1	HQ
	43E2072-1	. BOX ASSEMBLY, Overhead	1	HQ
-1	AN3400-4	. . LIGHT, Dome	1	HQ
		Attaching Parts		
	AN515-6R6	. . SCREW	4	HQ
	AN960D6L	. . WASHER	4	HQ
	AN365-632	. . NUT	4	HQ
		———*———		
	AN3124-307	. . . LAMP	1	HQ
-2	470097	. . CONTROL PANEL, Radio AN/ARN-6 (SAIM)	1	HQ
	or			
	ED206	. . CONTROL PANEL, Radio AN/ARN-6 (NAQ)	1	HQ

Figure and Index Number	Part Number	Description 1 2 3 4 5 6 7	Units per Assembly	Usable On Code
78B-3	90702	. . LOADMETER, Type J1-3 (RSM)	1	HQ
	or			
	128308	. . LOADMETER, Type J1-3 (WS)	1	HQ
-4	4613	. . LIGHT, Instrument (GMC)	1	HQ
-5	AN3203-V30	. . VOLTMETER	1	HQ
-6	4750	. . LIGHT, Instrument (GMC)	1	HQ
	43E2117-1	. . PANEL ASSEMBLY, Overhead LH	1	HQ
-7	AN3155-50-25	. . . RHEOSTAT	1	HQ
	AN3219-1	. . . KNOB	1	HQ
-8	MS25010-1	. . . LIGHT, Panel	6	HQ
-9	AN3021-3	. . . SWITCH, Toggle	1	HQ
-10	42E2060-1	. . . PANEL, Plastic	1	HQ
-11	AN3227-1	. . . SWITCH, Toggle	1	HQ
-12	AN3226-3	. . . SWITCH, Toggle	1	HQ
-13	AN3021-1	. . . SWITCH, Toggle	1	HQ
-14	42E2060-5	. . . PANEL, Plastic	1	HQ
-15	AN3027-1	. . . SWITCH, Toggle	1	HQ
-16	AN3023-5	. . . SWITCH, Toggle	1	HQ
	8916K680	. . . GUARD, Switch (USAF dwg 45A21662) (CUT)	1	HQ
-17	AN3021-1	. . . SWITCH, Toggle	1	HQ
-18	42E2060-11	. . . PANEL, Plastic	1	HQ
	42E2129-1	. . . PANEL, Metal	1	HQ
	42E2046-1	. . PANEL ASSEMBLY, Overhead center	1	HQ
-19	AN3155-50-50	. . . RHEOSTAT	1	HQ
-20	AN3155-25-75	. . . RHEOSTAT	1	HQ
	AN3219-1	. . . KNOB	2	HQ
-21	5180-327	. . . LIGHT, Panel (GMC)	1	HQ
-22	R-4001	. . PANEL, VHF receiver radio control (JOHJ)	1	HQ
-23	R-4002	. . PANEL, VHF receiver and transmitter selector (JOHJ)	1	HQ
	42E2116-1	. . PANEL ASSEMBLY, Overhead RH	1	HQ
-24	AN3155-25-50	. . . RHEOSTAT	1	HQ
-25	0317	. . . RHEOSTAT (OM)	1	HQ
	355	. . . SWITCH (Used with 0317) (OM)	1	HQ
	AN3219-1	. . . KNOB	2	HQ
-26	42E2060-4	. . . PANEL, Plastic	1	HQ
-27	AN3027-2	. . . SWITCH, Toggle	1	HQ
-28	AN3021-1	. . . SWITCH, Toggle	1	HQ
-29	AN3021-2	. . . SWITCH, Toggle	3	HQ
-30	AN3027-3	. . . SWITCH, Toggle	2	HQ
-31	AN3028-1	. . . GUARD, Switch	2	HQ
-32	MS25010-1	. . . LIGHT, Panel	7	HQ
-33	42E2060-2	. . . PANEL, Plastic	1	HQ
-34	AN3021-3	. . . SWITCH, Toggle	1	HQ
-35	W101W4	. . . SWITCH, Button (RHS)	1	HQ
-36	42E2060-9	. . . PANEL, Plastic	1	HQ
	42E2114-1	. . . PANEL, Metal	1	HQ

Equipment

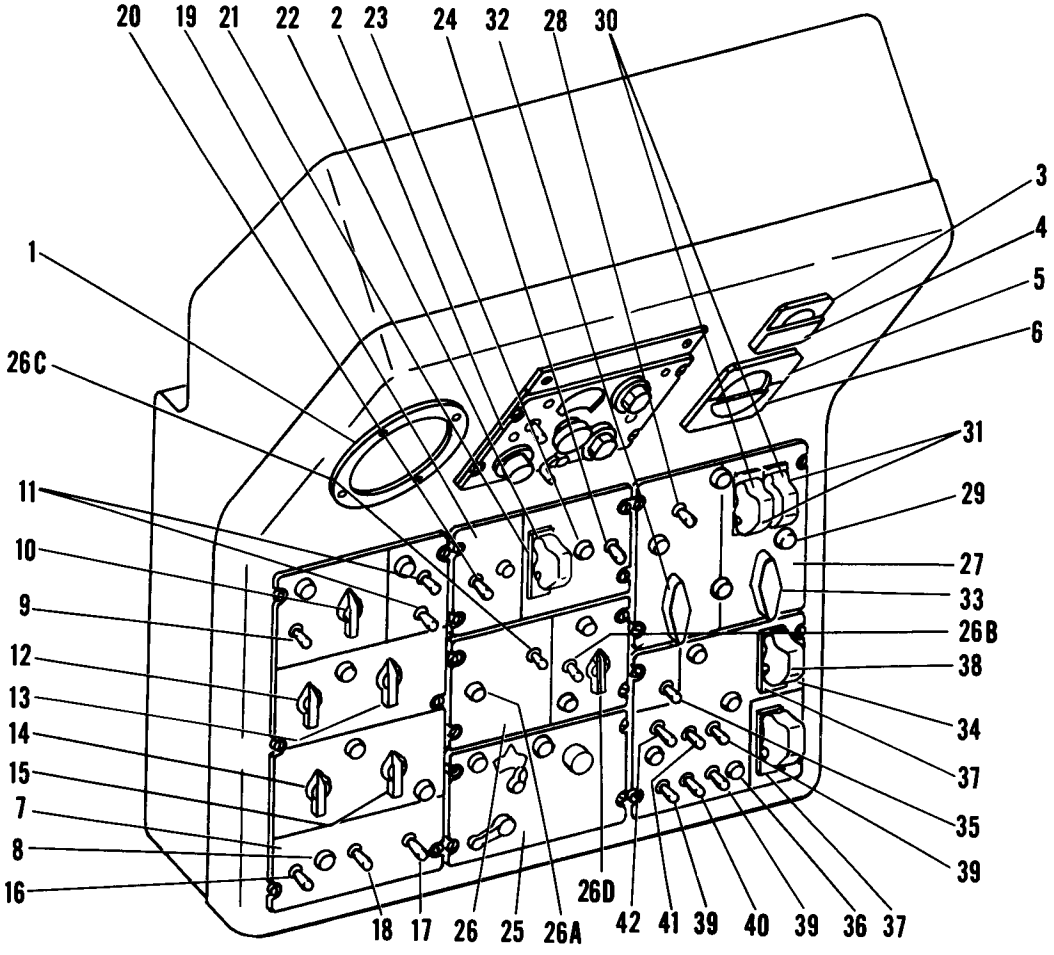

Figure 78C. Overhead Panel, H-21C 56-2015 thru 56-2160 and 56-4343 thru 56-4354

Figure and Index Number	Part Number	Description 1 2 3 4 5 6 7	Units per Assembly	Usable On Code
78C-	42E2040-8	PANEL INSTALLATION, Overhead	1	HI
	43E2072-14	. BOX ASSEMBLY, Overhead	1	IO
	43E2072-15	. BOX ASSEMBLY, Overhead	1	IP
-1	AN3400-4	. . LIGHT, Dome	1	HI
		Attaching Parts		
	AN515-6R6	. . SCREW	4	HI
	AN365-632	. . NUT	4	HI
	AN960D6L	. . WASHER	4	HI
		*—		
	AN3124-307	. . . LAMP	1	HI
-2	470097	. . CONTROL PANEL, Radio AN/ARN-6 (SAIM)	1	HI
	or			
	ED 206	. . CONTROL PANEL, Radio AN/ARN-6 (NAQ)	1	HI

Figure and Index Number	Part Number	1 2 3 4 5 6 7 Description	Units per Assembly	Usable On Code
78C-3	90702	. . LOADMETER, Type J1-3 (RSM)	1	HI
	or			
	128308	. . LOADMETER, Type J1-3 (WS)	1	HI
-4	4613	. . LIGHT, Instrument (GMC)	1	HI
-5	AN3203-V30	. . VOLTMETER	1	HI
-6	4750	. . LIGHT, Instrument (GMC)	1	HI
	43E2149-1	. . PANEL ASSEMBLY, Overhead LH	1	HI
-7	43E2060-1	. . . PANEL, Plastic	1	HI
	43E2150-1	. . . PANEL, Metal	1	HI
-8	MS25010-1	. . . LIGHT, Panel	6	HI
-9	AN3021-3	. . . SWITCH, Toggle	1	HI
-10	AN3155-50-25	. . . RHEOSTAT	1	HI
	AN3219-1	. . . KNOB	1	HI
-11	AN3021-10	. . . SWITCH, Toggle	2	HI
-12	AN3155-25-75	. . . RHEOSTAT	1	HI
	AN3219-1	. . . KNOB	1	HI
-13	AN3155-50-50	. . . RHEOSTAT	1	HI
	AN3219-1	. . . KNOB	1	HI
-14	0317	. . . RHEOSTAT, Model J (OM)	1	HI
	355	. . . SWITCH, Toggle (OM)	1	HI
	AN3219-1	. . . KNOB	1	HI
-15	AN3155-25-50	. . . RHEOSTAT	1	HI
-16	AN3021-1	. . . SWITCH, Toggle	1	HI
-17	AN3227-1	. . . SWITCH, Toggle	1	HI
-18	AN3226-3	. . . SWITCH, Toggle	1	HI
	43E2153-1	. . PANEL ASSEMBLY, Overhead center	1	HI
-19	42E2060-11	. . . PANEL, Plastic	1	HI
	43E2154-1	. . . PANEL, Metal	1	HI
-20	AN3027-1	. . . SWITCH, Toggle	1	HI
-21	AN3023-5	. . . SWITCH, Toggle	1	HI
-22	8916K680	. . . GUARD, Switch (CUT) (USAF dwg 45A21662)	1	HI
-23	MS25010-1	. . . LIGHT, Panel	2	HI
-24	AN3021-1	. . . SWITCH, Toggle	1	HI
-25	R-4001	. . PANEL, VHF receiver radio control (JOHJ)	1	HI
	43E3068-1	. . PANEL ASSEMBLY, Radio control	1	IO
	43E3070-1	. . PANEL ASSEMBLY, Radio control	1	IP
-26	43E2060-4	. . . PANEL, Plastic	1	IO
	43E2060-5	. . . PANEL, Plastic	1	IP
	43E3067-1	. . . PANEL, Metal	1	IO
	43E3069-1	. . . PANEL, Metal	1	IP
-26A	MS25010-1	. . . LIGHT, Panel	3	HI
-26B	MS35058-1	. . . SWITCH, Toggle	1	HI
	or			
	AN3021-10	. . . SWITCH, Toggle	1	HI
-26C	MS35059-4	. . . SWITCH, Toggle	1	IP
	or			
	AN3027-3	. . . SWITCH, Toggle	1	IP
-26D	LQ13-116	. . . POTENTIOMETER (IRC)	1	HI
	AN3219-1	. . . KNOB	1	HI
	43E2156-1	. . PANEL ASSEMBLY, Overhead RH upper	1	HI
-27	43E2060-3	. . . PANEL, Plastic	1	HI
	43E2152-2	. . . PANEL, Metal	1	HI
-28	8859K11	. . . SWITCH, Lever lock (CUT)	1	HI
-29	MS25010-1	. . . LIGHT, Panel	4	HI
-30	MS35058-1	. . . SWITCH, Toggle	2	HI
	or			
	AN3021-10	. . . SWITCH, Toggle	2	HI
-31	AN3028-1	. . . GUARD, Switch	2	HI
-32	2J56A4-4	. . . SWITCH, Rotary (Shallcross Mfg Co, Collingdale, Pa)	1	HI
-33	74005-F3C	. . . SWITCH, Rotary (OAK)	1	HI
	46A42256	. . . KNOB (DIGR)	2	HI
	43E2151-1	. . PANEL ASSEMBLY, Overhead RH lower	1	HI

Figure and Index Number	Part Number	1 2 3 4 5 6 7 Description	Units per Assembly	Usable On Code
78C-34	43E2060-2	. . . PANEL, Plastic	1	HI
	43E2152-1	. . . PANEL, Metal	1	HI
-35	AN3021-3	. . . SWITCH, Toggle	1	HI
-36	MS25010-1	. . . LIGHT, Panel	4	HI
-37	AN3027-3	. . . SWITCH, Toggle	2	HI
-38	AN3028-1	. . . GUARD, Switch	2	HI
-39	AN3021-10	. . . SWITCH, Toggle	3	HI
-40	AN3021-1	. . . SWITCH, Toggle	1	HI
-41	AN3027-9	. . . SWITCH, Toggle	1	HI
-42	AN3021-11	. . . SWITCH, Toggle	1	HI

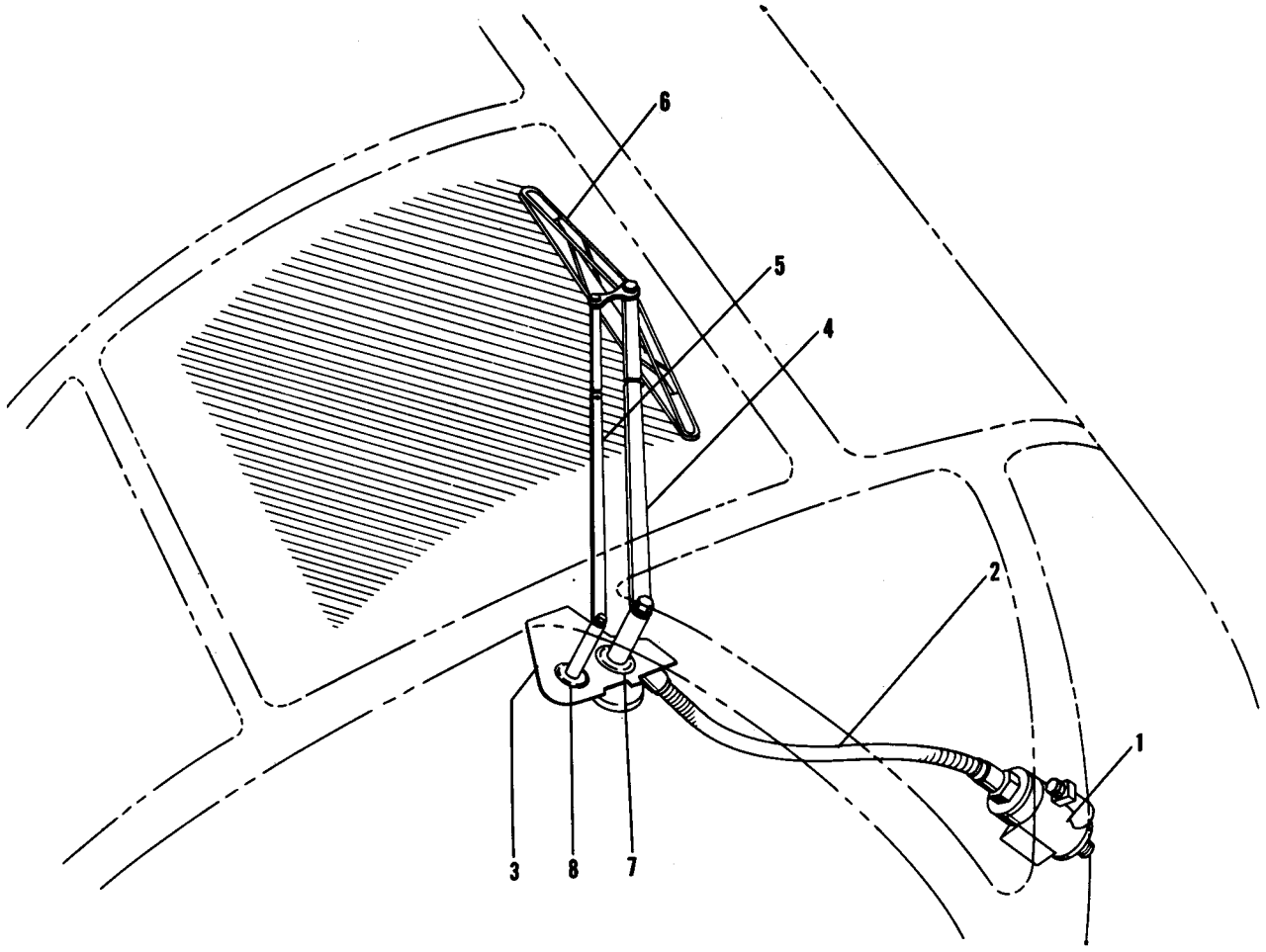

Figure 79. Windshield Wiper

Figure and Index Number	Part Number	Description 1 2 3 4 5 6 7	Units per Assembly	Usable On Code
79-	42E4014-1	WIPER INSTALLATION, Windshield	1	J,DY
	42E1185-1	WIPER INSTALLATION. Windshield	1	DS,EH
-1	XW20026-2	. MOTOR, Electric (ALV)	1	
-2	W3778-6	. SHAFT, Flexible left-lay (ALV)	1	J,DY
	XW20465-13	. SHAFT, Flexible left-lay (ALV)	1	DS,EH
-3	XW1300-A306BA	. WINDOW UNIT, Right electric (ALV)	1	J.DY
	XW20345-320-74	. WINDOW UNIT, Right electric (ALV)	1	DS,EH
-4	W2091-0-11	. ARM, Universal (ALV)	1	
-5	XW20025-16-15	. LINK, Arm (ALV)	1	
-6	W14770-14-3	. BLADE, Flexible (ALV)	1	
-7	AN931B9S13	. GROMMET	1	
-8	AN931B4-7	. GROMMET	1	DS,EH
	22S4099-1	. PIN, Windshield wiper		

Equipment

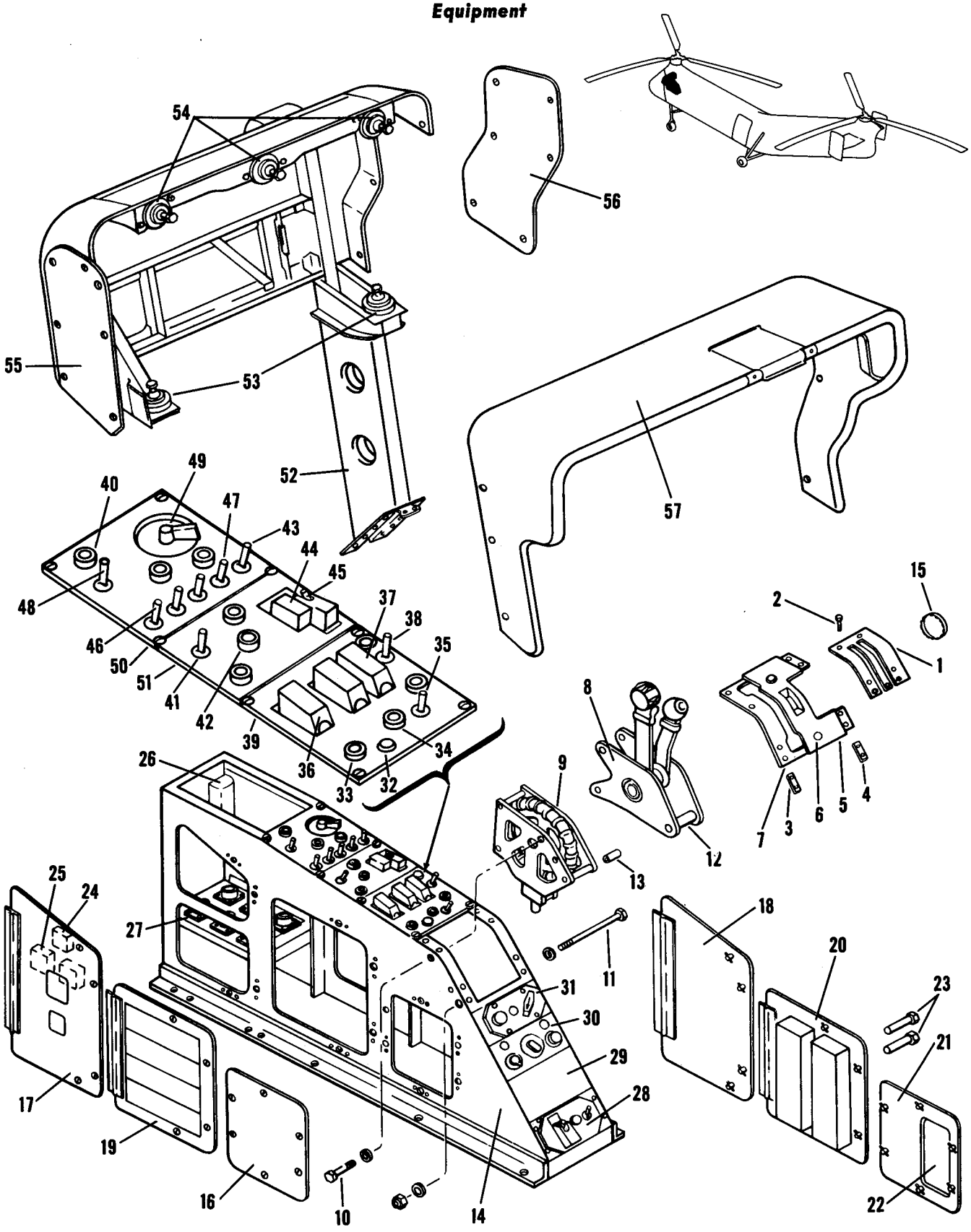

Figure 80. Control Console, YH-21 and H-21A

Figure and Index Number	Part Number	Description 1 2 3 4 5 6 7	Units per Assembly	Usable On Code
80-	22E1188-1	SUPPORT INSTALLATION, Instrument panel	1	K,M
	22E1188-9	SUPPORT INSTALLATION, Instrument panel	1	W
	22E1188-14	SUPPORT INSTALLATION, Instrument panel	1	BM
	22E1188-16	SUPPORT INSTALLATION, Instrument panel	1	BN
	22E1187-2	. CONSOLE INSTALLATION, Control	1	K,M
	22E1187-1	. CONSOLE INSTALLATION, Control	1	W
	22E1187-3	. CONSOLE INSTALLATION, Control	1	X
-1	22E1054-1	. . INSERT, Curved panel	1	J
		Attaching Parts		
-2	AN507-440R5	. . SCREW	5	
	AN365-440	. . NUT	5	
	AN960D4L	. . WASHER	5	
		———*———		
	22E2041-1	. . PANEL ASSEMBLY, Curved	1	J
		Attaching Parts		
-3	22E1055-1	. . STRIP ASSEMBLY	1	J
-4	22E1055-2	. . STRIP ASSEMBLY	1	J
	PC-3½	. . CUP (DZ)	2	J
	PS-3½	. . SPRING (DZ)	2	J
	PF-3½-38	. . FASTENER (DZ)	2	J
		———*———		
-5	22E2042-1	. . . PANEL ASSEMBLY, Curved plastic	1	J
-6	5180-327	. . . LIGHT ASSEMBLY (GMC)	2	J
-7	22E2039-1	. . . PANEL ASSEMBLY, Curved metal	1	J
-8	3L2376	. . CONTROL ASSEMBLY, Engine (LYQ)	1	J
-9	17C1150-2	. . MECHANISM ASSEMBLY, Trim, see fig. 53	Ref	A
	17C1150-3	. . MECHANISM ASSEMBLY, Trim, see fig. 53	Ref	E
		Attaching Parts		
-10	AN23-11A	. . BOLT	4	J
-11	AN4-62A	. . BOLT	3	
	AN365-428	. . NUT	3	
	AN960D10L	. . WASHER	4	
	AN960D416	. . WASHER	6	
		———*———		
-12	22E1053-1	. . SPACER	3	
-13	22E1053-2	. . SPACER	3	
-14	22E4029-200	. . FRAME ASSEMBLY, Control console	1	G
	22E4029-102	. . FRAME ASSEMBLY, Control console	1	X
-15	50834	. . . BUTTON, Plug (UC)	1	J
-16	22E4029-2	. . . PANEL ASSEMBLY, Aft LH	1	J
-17	22E4029-3	. . . PANEL ASSEMBLY, Fwd LH	1	J
-18	22E4029-105	. . . PANEL ASSEMBLY, Fwd RH	1	G
	22E4029-106	. . . PANEL ASSEMBLY, Fwd RH	1	X
	22E2038-3	. . ELECTRICAL INSTALLATION, Console	1	J
-19	22E2100-1	. . . PANEL ASSEMBLY, Circuit breaker LH	1	S
	22E2100-5	. . . PANEL ASSEMBLY, Circuit breaker LH	1	T
	22E2100-8	. . . PANEL ASSEMBLY, Circuit breaker LH	1	AX
	22E2100-12	. . . PANEL ASSEMBLY, Circuit breaker LH	1	AY
	22E2100-4	. . . . BAR, Bus	2	S,E
	22E2100-4	. . . . BAR, Bus	3	T
	22E2100-3	. . . . CLIP	16	S
	22E2100-3	. . . . CLIP	17	T
	22E2100-3	. . . . CLIP	15	E
	AN3161P5	. . . . BREAKER, Circuit	15	S
	AN3161P5	. . . . BREAKER, Circuit	16	T
	AN3161P5	. . . . BREAKER, Circuit	14	AX
	AN3161P5	. . . . BREAKER, Circuit	13	AY
	AN3161P15	. . . . BREAKER, Circuit	2	A
	AN3161P10	. . . . BREAKER, Circuit	4	J
	AN3161P25	. . . . BREAKER, Circuit	1	E
	AN3161P35	. . . . BREAKER, Circuit	3	J
	NAS451-43	. . . . BUTTON, Plug	11	S

Figure and Index Number	Part Number	Description	Units per Assembly	Usable On Code
80-	NAS451-43	. . . . BUTTON, Plug	10	T
	NAS451-43	. . . . BUTTON, Plug	13	AX
	NAS451-43	. . . . BUTTON, Plug	14	AY
-20	22E2101-1	. . . PANEL ASSEMBLY, Circuit breaker RH	1	J
	22E2101-3	. . . . BAR, Bus	1	J
	22E2101-4	. . . . BAR, Bus	1	J
	22E2100-3	. . . . CLIP	17	J
	AN3161P5	. . . . BREAKER, Circuit	17	J
	AN3161P10	. . . . BREAKER, Circuit	3	J
	AN3161P20	. . . . BREAKER, Circuit	1	J
	NAS451-43	. . . . BUTTON, Plug	3	J
-21	22E2065-1	. . . PANEL ASSEMBLY, Fuse	1	J
-22	22E2064-1	. . . . DOOR ASSEMBLY, Fuse	1	J
	4224	. . . BLOCK, Fuse (BUS)	3	J
	4190	. . . BLOCK, Fuse (BUS)	1	J
	ACO-1	. . . FUSE (BUS)	8	J
-23	2953	. . . CONTAINER ASSEMBLY, Spare lamp (GMC)	2	J
	AN3140-327	. . . LAMP (Spare)	10	J
-24	AN3316-1	. . . RELAY, Warning light dimming	1	J
-25	BULLETIN 138	. . . RESISTOR, 200-ohm 30-watt (dwg 2, set at 100 ohms) (OM)	3	
-26	44B18574	. . . RELAY, Type D1 inverter failure (USAF dwg No.)	1	
-27	AN3100A-20-16S	. . . RECEPTACLE	1	J
	AN3100A-20-27S	. . . RECEPTACLE	1	J
	AN3100A-32-7S	. . . RECEPTACLE	1	
	AN3100A-28-15S	. . . RECEPTACLE	1	
	AN3100A-28-21S	. . . RECEPTACLE	1	
	AN3100A-20-18S	. . . RECEPTACLE	1	
	2182-8	. . . RECEPTACLE, Stowage (CED)	1	J
-28	C-402A/A	. . . PANEL, Control (GFAE)	1	
	22E2092-1	. . . KIT, Adapter (USAF dwg No. 49C12551-1)	1	J
-29	22E2038-5	. . . PLATE, Cover	1	J
-30	C-404A/A	. . . PANEL, Control (GFAE)	1	J
	22E2092-2	. . . KIT, Adapter (USAF dwg No. 49C12551-2)	1	J
	C-628/ARC-27	. . . CONTROL, Radio set (alternate for C-404A/A and 22E2092-2)	1	J
-31	C-700/AIC	. . . PANEL, Control (GFAE)	1	J
	22E2092-1	. . . KIT, Adapter (USAF dwg No. 49C12551-1)	1	J
	22E2078-7	. . . PANEL ASSEMBLY, Console switch	1	J
	22E2078-8	. . . . EQUIPMENT ASSEMBLY, Switch panel	1	J
-32	5180-327	. . . . . LIGHT ASSEMBLY (GMC)	4	
-33	AN3157-6	. . . . . LIGHT ASSEMBLY	1	
-34	AN3157-8	. . . . . LIGHT ASSEMBLY	1	
	AN3121-313	. . . . . LAMP	2	
-35	AN3027-1	. . . . . SWITCH, Toggle	1	
-36	AN3021-8	. . . . . SWITCH, Toggle	2	J
	AN3028-4	. . . . . GUARD, Switch	2	
-37	AN3023-5	. . . . . SWITCH, Toggle	1	
	8916K680	. . . . . GUARD, Switch (CUT)	1	
-38	AN3021-1	. . . . . SWITCH, Toggle	1	
	2182-2	. . . . . PLUG, Cannon (CED)	1	J
-39	22E2077-4	. . . . . PANEL, Plastic	1	
	22E2078-9	. . . . . PANEL SUBASSEMBLY	1	
	22E2079-3	. . . . . PANEL, Metal	1	
		Attaching Parts		
	PC-3½	. . . . . CUP (DZ)	4	
	PS-3½	. . . . . SPRING (DZ)	4	
	PF-3½-38	. . . . . FASTENER (DZ)	4	
		———*———		
	22E2078-4	. . . PANEL ASSEMBLY, Console switch	1	
	22E2078-5	. . . . EQUIPMENT ASSEMBLY, Switch panel	1	
-40	5180-327	. . . . . LIGHT ASSEMBLY (GMC)	5	J

Figure and Index Number	Part Number	Description 1 2 3 4 5 6 7	Units per Assembly	Usable On Code
80-41	45A7400-1	. . . . . SWITCH, Toggle (USAF dwg No.)	1	
	or			
	8749K11	. . . . . SWITCH, Toggle (CUT)	1	
-42	AN3157-8	. . . . . LIGHT ASSEMBLY	1	
	AN3121-313	. . . . . LAMP	1	
-43	AN3021-8	. . . . . SWITCH, Toggle	4	
-44	AN3028-4	. . . . . GUARD, Switch	1	
-45	AN3022-3	. . . . . SWITCH, Toggle	1	
	AN3229-1	. . . . . GUARD, Switch	1	
-46	AN3021-3	. . . . . SWITCH, Toggle	1	
-47	AN3021-1	. . . . . SWITCH, Toggle	1	
-48	AN3021-7	. . . . . SWITCH, Toggle	1	
-49	AN3212-1	. . . . . SWITCH, Ignition	1	
-50	22E2077-1	. . . . . PANEL, Plastic	1	J
-51	22E2077-2	. . . . . PANEL, Plastic	1	J
	22E2078-6	. . . . . PANEL SUBASSEMBLY	1	J
	22E2079-2	. . . . . . PANEL, Metal	1	J
		Attaching Parts		
	PC-3½	. . . . . CUP (DZ)	4	
	PS-3½	. . . . . SPRING (DZ)	4	
	PF-3½-38	. . . . . FASTENER (DZ)	4	
		***		
	42E1190-14	. PEDESTAL INSTALLATION	1	J
-52	42E1190-15	. . PEDESTAL ASSEMBLY	1	J
-53	200PL-45	. MOUNT (LO)	2	
-54	200XPD90	. MOUNT (LO)	3	
	42E1090-1	. PANEL INSTALLATION, End LH	1	
	42E1090-2	. PANEL INSTALLATION, End RH	1	
-55	42E1090-3	. . PANEL ASSEMBLY, End LH	1	
-56	42E1090-4	. . PANEL ASSEMBLY, End RH	1	
	42E1100-1	. SHIELD INSTALLATION, Glare	1	J
-57	42E1100-3	. . SHIELD ASSEMBLY, Glare	1	J

Equipment

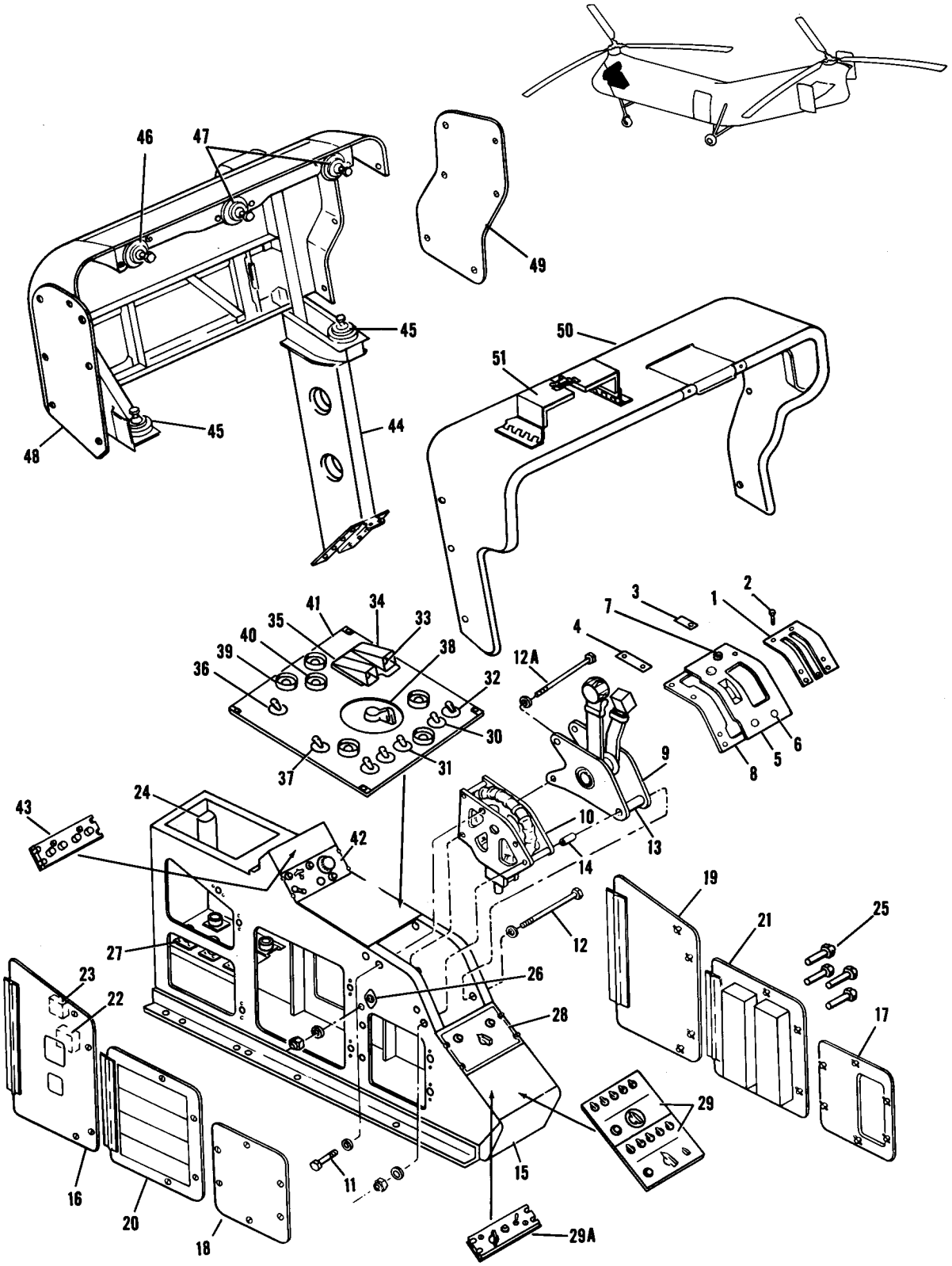

Figure 81. Control Console, H-21B and H-21C

Figure and Index Number	Part Number	Description 1 2 3 4 5 6 7	Units per Assembly	Usable On Code
81-	42E1103-7	SUPPORT INSTALLATION, Instrument panel	1	AH
	42E1103-5	SUPPORT INSTALLATION, Instrument panel	1	BI
	42E1103-9	SUPPORT INSTALLATION, Instrument panel	1	FK
	42E1103-1	SUPPORT INSTALLATION, Instrument panel	1	BK
	42E1103-8	SUPPORT INSTALLATION, Instrument panel	1	FI
	42E1050-2	. CONSOLE INSTALLATION, Control	1	AH
	42E1050-5	. CONSOLE INSTALLATION, Control	1	BI
	42E1050-1	. CONSOLE INSTALLATION, Control	1	BK
	42E1050-7	. CONSOLE INSTALLATION, Control	1	FI
	42E1175-1	. CONSOLE INSTALLATION, Control	1	DZ
	42E1175-6	. CONSOLE INSTALLATION, Control	1	EG
	42E1050-9	. CONSOLE INSTALLATION, Control	1	FK
	42E1175-2	. CONSOLE INSTALLATION, Control	1	HQ
	42E1175-9	. CONSOLE INSTALLATION, Control	1	HI
	42E1050-4	. . CONSOLE ASSEMBLY, Control	1	AH
	42E1050-6	. . CONSOLE ASSEMBLY, Control	1	BI
	42E1050-3	. . CONSOLE ASSEMBLY, Control	1	BK
	42E1050-8	. . CONSOLE ASSEMBLY, Control	1	FI
	42E1175-3	. . CONSOLE ASSEMBLY, Control	1	DZ
	42E1175-5	. . CONSOLE ASSEMBLY, Control	1	EG
	42E1050-10	. . CONSOLE ASSEMBLY, Control	1	FK
	42E1175-4	. . CONSOLE ASSEMBLY, Control	1	HQ
	43E1175-15	. . CONSOLE ASSEMBLY, Control	1	IO
	42E1175-16	. . CONSOLE ASSEMBLY, Control	1	IP
-1	42E1054-1	. . . INSERT, Curved panel	1	AU
		Attaching Parts		
-2	AN507-440R5	. . . SCREW	5	AU
	AN365-440	. . . NUT	5	AU
	AN960D4L	. . . WASHER	5	AU
		———*———		
	42E2041-1	. . . PANEL ASSEMBLY, Curved	1	HJ
	42E2041-2	. . . PANEL ASSEMBLY, Curved	1	HI
		Attaching Parts		
-3	42E1055-2	. . . STRIP ASSEMBLY	1	AU
-4	42E1055-1	. . . STRIP ASSEMBLY	1	AU
	PC-3-½	. . . CUP (DZ)	3	AU
	PS-3-½	. . . SPRING (DZ)	3	AU
	PF-3-½-38	. . . FASTENER (DZ)	3	AU
		———*———		
-5	42E2042-1	. . . . PANEL ASSEMBLY, Curved plastic	1	HJ
-6	5180-327	. . . . LIGHT ASSEMBLY (GMC)	3	AU
-7	AN3502-1A	. . . . LIGHT ASSEMBLY	1	AU
-8	42E2039-1	. . . . PANEL ASSEMBLY, Curved metal	1	AU
-9	3L2492	. . . CONTROL ASSEMBLY, Engine (LYQ)	1	DW
	3L2912	. . . CONTROL ASSEMBLY, Engine (LYQ)	1	HR
	or			
	50037	. . . CONTROL ASSEMBLY, Engine (RHW)	1	HR
-10	17C1150	. . . MECHANISM ASSEMBLY, Trim, see fig. 53*	Ref	
		Attaching Parts		
-11	AN23-14A	. . . BOLT	2	AU
-12	AN4-62A	. . . BOLT	1	DS,EH
-12A	AN4-64A	. . . BOLT	2	DS,EH
	AN4-62A	. . . BOLT	3	DY
	AN365-428	. . . NUT	3	AU
	AN960D10L	. . . WASHER (Used with AN23-14A)	2	AU
	AN960D416	. . . WASHER	3	AU
		———*———		
-13	22E1053-1	. . . SPACER	3	AU
-14	22E1053-2	. . . SPACER	3	AU

*For proper usable on codes and complete breakdown, see figure number as indicated.

Figure and Index Number	Part Number	1 2 3 4 5 6 7 Description	Units per Assembly	Usable On Code
81-15	42E4029-1	. . . FRAME ASSEMBLY, Control console	1	AH
	42E4029-9	. . . FRAME ASSEMBLY, Control console	1	FM
	42E4029-10	. . . FRAME ASSEMBLY, Control console	1	DT
	42E1170-1	. . . FRAME ASSEMBLY, Control console	1	DZ
	42E1170-70	. . . FRAME ASSEMBLY, Control console	1	DU
-16	42E4084-6	. . . . PANEL ASSEMBLY, Fwd LH	1	DY
	42E1170-5	. . . . DOOR ASSEMBLY, Fwd LH	1	DS,EH
-17	42E4084-7	. . . . PANEL ASSEMBLY, Aft RH	1	AL,DT
	42E4113-1	. . . . PANEL ASSEMBLY, Aft RH	1	FH
	42E1170-4	. . . . DOOR ASSEMBLY, Aft RH	1	DS,EH
-18	42E4084-8	. . . . PANEL ASSEMBLY, Aft LH	1	DY
	AN3433-2-2	. . . . BAR, Bus	3	DS,AN
	42E1170-3	. . . . DOOR ASSEMBLY, Aft LH	1	DS,EH
	RW20G140	. . . . RESISTOR, Side lights	1	EH
	RW20G250	. . . . RESISTOR, Tail light	1	EH
	RW20G310	. . . . RESISTOR, Formation lights	1	EH
-19	42E4089-1	. . . . PANEL ASSEMBLY, Fwd RH	1	AL
	42E4081-1	. . . . PANEL ASSEMBLY, Fwd RH	1	DT,FM
	42E1170-2	. . . . DOOR ASSEMBLY, Fwd RH	1	DS,EH
	43E2038-1	. . . ELECTRICAL INSTALLATION, Console	1	AL
	43E2038-6	. . . ELECTRICAL INSTALLATION, Console	1	FM
	42E2038-1	. . . ELECTRICAL INSTALLATION, Console	1	DT
	42E2038-7	. . . ELECTRICAL INSTALLATION, Console	1	DZ
	42E2038-14	. . . ELECTRICAL INSTALLATION, Console	1	EG
	43E2005-1	. . . ELECTRICAL INSTALLATION, Console	1	HQ
	43E2005-8	. . . ELECTRICAL INSTALLATION, Console	1	IO
■	43E2005-9	. . . ELECTRICAL INSTALLATION, Console	1	IP
-20	43E2100-1	. . . . PANEL ASSEMBLY, Circuit breaker	1	AL
	43E2100-4	. . . . PANEL ASSEMBLY, Circuit breaker	1	FM
	42E2100-1	. . . . PANEL ASSEMBLY, Circuit breaker	1	DT
	42E2123-1	. . . . PANEL ASSEMBLY, Circuit breaker	1	DS
	43E2123-1	. . . . PANEL ASSEMBLY, Circuit breaker	1	HQ
	43E2123-3	. . . . PANEL ASSEMBLY, Circuit breaker	1	IO
■	43E2123-4	. . . . PANEL ASSEMBLY, Circuit breaker	1	IP
	22E2100-4	. . . . . BAR, Bus	3	FJ
	22E2100-4	. . . . . BAR, Bus	2	EH
	22E2100-11	. . . . . BAR, Bus	1	EH
	22E2100-3	. . . . . CLIP	18	AL
	22E2100-3	. . . . . CLIP	16	FM
	22E2100-3	. . . . . CLIP	15	DT
	MS25017-15	. . . . . BREAKER, Circuit	1	FJ
	MS25017-5	. . . . . BREAKER, Circuit	26	IO
■	MS25017-5	. . . . . BREAKER, Circuit	21	AL
	MS25017-5	. . . . . BREAKER, Circuit	27	IP
	MS25017-5	. . . . . BREAKER, Circuit	20	FM,HQ
	MS25017-5	. . . . . BREAKER, Circuit	19	D
	MS25017-10	. . . . . BREAKER, Circuit	4	IS
	MS25017-10	. . . . . BREAKER, Circuit	3	HI
	MS25017-20	. . . . . BREAKER, Circuit	1	D,AL
	MS25017-25	. . . . . BREAKER, Circuit	1	D
■	NAS451-43	. . . . . BUTTON, Plug	AR	
	42E2100-4	. . . . . HINGE, Half	1	AU
	42E2100-5	. . . . . HINGE, Half	1	AU
	42E2100-6	. . . . . PIN	1	AU
	42E2121-1	. . . . . PANEL, Metal	1	C,DS
	42E2099-1	. . . . . PANEL, Metal	1	DT
-21	42E2101-1	. . . . PANEL ASSEMBLY, Circuit breaker RH	1	AL,DT
	42E2101-3	. . . . PANEL ASSEMBLY, Circuit breaker RH	1	FM
	42E2124-1	. . . . PANEL ASSEMBLY, Circuit breaker RH	1	PS
	42E2124-2	. . . . PANEL ASSEMBLY, Circuit breaker RH	1	HQ
	42E2124-3	. . . . PANEL ASSEMBLY, Circuit breaker RH	1	HI

Figure and Index Number	Part Number	1 2 3 4 5 6 7 Description	Units per Assembly	Usable On Code
81-	42E2113-2	. . . . . BAR, Bus	2	DY
	42E2122-2	. . . . . BAR, Bus	3	HI
	42E2122-2	. . . . . BAR, Bus	2	DS,HQ
	42E2122-3	. . . . . BAR, Bus	1	DS,HQ
	42E2122-4	. . . . . BAR, Bus	1	DS,HQ
	22E2100-3	. . . . . CLIP	15	AL,DT
	22E2100-3	. . . . . CLIP	14	FM
	MS25017-5	. . . . . BREAKER, Circuit	13	D,HV
	MS25017-5	. . . . . BREAKER, Circuit	12	FM,HQ
	MS25017-10	. . . . . BREAKER, Circuit	1	AU
	MS25017-20	. . . . . BREAKER, Circuit	1	HJ
	NAS451-43	. . . . . BUTTON, Plug	1	DT,HW
	NAS451-43	. . . . . BUTTON, Plug	2	FM
	BULLETIN 138	. . . . . RESISTOR, 200-ohm 30-watt (dwg 2, set at 100 ohms) (OM)	1	DT,C
	AN3314-1	. . . . . RELAY	1	DT,C
	42E2132-1	. . . . . JUMPER	2	DS,EH
	42E2101-5	. . . . . HINGE, Half	1	DY
	42E2101-6	. . . . . HINGE, Half	1	DY
	42E2122-6	. . . . . HINGE, Half	2	DS,EH
	42E2101-7	. . . . . PIN	1	DY
	43E2005-4	. . . . . PIN	1	DS,EH
	42E2113-1	. . . . . PANEL, Metal	1	DY
	42E2122-1	. . . . . PANEL, Metal	1	DS,EH
-22	AN3311-1	. . . . RELAY, Auto-pilot warning light	1	D
	AN3311-1	. . . . RELAY	2	AL
-23	15E2026-4	. . . . PANEL ASSEMBLY, Warning light dimming relay	1	AU
	15E2026-8	. . . . . PANEL	1	AU
	15E2026-9	. . . . . STRIP, Terminal	1	AU
		Attaching Parts		
	AN515-6-7	. . . . . SCREW	2	AU
	AN365-632	. . . . . NUT	2	AU
	AN960D6	. . . . . WASHER	2	AU
		———*———		
	AN3434-2	. . . . . STRIP, Insulating	2	EH,HX
	3QA95A	. . . . . RELAY (PCR)	1	AU
		Attaching Parts		
	AN500A8-10	. . . . . SCREW	4	AU
	AN935-8	. . . . . WASHER, Lock	4	AU
	AN960-8L	. . . . . WASHER	4	AU
	AN995NC40	. . . . . WIRE, Lock	AR	AU
	NAS43-3-16	. . . . . SPACER	4	AU
		———*———		
	RW20G251	. . . . . RESISTOR (JAN-R-26A)	6	AU
		Attaching Parts		
	AN3-32A	. . . . . BOLT	2	AU
	AN365-1032	. . . . . NUT	2	AU
	AN960D10	. . . . . WASHER	2	AU
		———*———		
-24	44B18574	. . . . RELAY, Type D1 inverter failure (USAF dwg No.)	1	AU
-25	2953	. . . . CONTAINER ASSEMBLY, Spare lamp (GMC)	4	AU
	G334	. . . . LAMP (Spare) (GMC)	5	AU
	AN3140-327	. . . . LAMP (Spare)	15	AU
-26	7526	. . . . RECEPTACLE (HAW)	1	D,AL
	A6914-1024-1	. . . . COVER (TIN)	1	EH
	C6914-1024	. . . . COVER (TIN)	1	FM
-27	AN3100A-24-28S	. . . . RECEPTACLE	1	AU
	AN3100A-20-18S	. . . . RECEPTACLE	1	AU
	AN3100A-28-15S	. . . . RECEPTACLE	1	AU
	AN3100A-28-21S	. . . . RECEPTACLE	1	AU
	AN3100A-32-7S	. . . . RECEPTACLE	1	AU
	AN3100A-24-28P	. . . . RECEPTACLE	1	FM,EH

Figure and Index Number	Part Number	Description (1 2 3 4 5 6 7)	Units per Assembly	Usable On Code
81-	AN3057-12	. . . . ADAPTER	1	AU
	AN3057-16	. . . . ADAPTER	3	AL,D
	AN3057-16	. . . . ADAPTER	4	AN
	AN3057-20	. . . . ADAPTER	1	AU
-28	43E3019-1	. . . . PANEL, Radio control	1	AL
	AN3220-3	. . . . . KNOB	1	AL
	5180-327	. . . . . LIGHT, Panel (GMC)	2	AL
	51669-F4	. . . . . SWITCH, Wafer (OAK)	1	AL
	43E3020-1	. . . . . PANEL, Plastic	1	AL
	43E3021-1	. . . . . PANEL, Metal	1	AL
	43E2038-2	. . . . PANEL ASSEMBLY, Cover	1	AL
-29	C-695/AIC	. . . . PANEL, Console control (GFAE)	2	FM
	C-824/AIC-10	. . . . PANEL, Interphone control (GFAE)	2	D
	SB-329/AR	. . . . PANEL, Signal distribution (GFAE)	2	AN
	C-1827/ARC-55	. . . . PANEL ASSEMBLY, Control (GFAE)	1	HI
	49C12551-4	. . . . KIT, Adapter	2	FM
	43E3103-1	. . . . PLATE, Plastic lighting	2	FM
-29A	43E3029-1	. . . . PANEL ASSEMBLY, Marker beacon control	1	IO
	AN3219-1	. . . . . KNOB	1	IO
	MS25010-1	. . . . . LIGHT, Panel	1	IO
	AN3021-10	. . . . . SWITCH	1	IO
	LQ13-116	. . . . . POTENTIOMETER (IRC)	1	IO
	43E3031-1	. . . . . PANEL, Plastic	1	IO
	43E3030-1	. . . . . PANEL, Metal	1	IO
	43E2221-3	. . . . PANEL ASSEMBLY, Cover	1	HI
	42E2078-1	. . . . PANEL ASSEMBLY, Switch	1	AL
	42E2078-4	. . . . PANEL ASSEMBLY, Switch	1	ID,FM
	42-E2078-7	. . . . PANEL ASSEMBLY, Switch	1	EG,HQ
	42E2078-8	. . . . PANEL ASSEMBLY, Switch	1	HI
	42E2078-2	. . . . . EQUIPMENT ASSEMBLY, Switch panel	1	AL
	42E2078-5	. . . . . EQUIPMENT ASSEMBLY, Switch panel	1	ID,FM
	42E2078-6	. . . . . EQUIPMENT ASSEMBLY, Switch panel	1	EG,EH
-30	AN3021-8	. . . . . SWITCH, Toggle	4	AU
-31	AN3021-7	. . . . . SWITCH, Toggle	1	AL
-32	AN3021-1	. . . . . SWITCH, Toggle	1	ID,DV
	AN3021-10	. . . . . SWITCH, Toggle	1	EG,EH
-33	AN3022-3	. . . . . SWITCH, Toggle	1	AU
-34	AN3229-1	. . . . . GUARD, Switch	1	AU
-35	AN3028-4	. . . . . GUARD, Switch	1	AU
	42E2262-1	. . . . . GUARD, Switch	1	AU
-36	45A7400-1	. . . . . SWITCH, Toggle (USAF dwg No.)	1	AL
	or			
	8749K11	. . . . . SWITCH, Toggle (CUT)	1	AL
-37	AN3021-3	. . . . . SWITCH, Toggle	1	AU
-38	AN3212-1	. . . . . SWITCH, Ignition	1	AU
	AN3057-6A	. . . . . ADAPTER, Ignition switch	1	AU
-39	5180-327	. . . . . LIGHT, Panel (GMC)	6	AU
-40	AN3157-8	. . . . . LIGHT ASSEMBLY	1	AU
	AN3121-313	. . . . . LAMP	1	AU
-41	42E2077-1	. . . . . PANEL, Plastic	1	AL
	42E2077-2	. . . . . PANEL, Plastic	1	ID,FM
	42E2077-3	. . . . . PANEL, Plastic	1	EG,HQ
	42E2077-4	. . . . . PANEL, Plastic	1	HI
	42E2078-3	. . . . . PANEL SUBASSEMBLY	1	AU
	42E2079-1	. . . . . . PANEL, Metal	1	AU
		Attaching Parts		
	PC-3-½	. . . . . CUP (DZ)	4	AU
	PS-3-½	. . . . . SPRING (DZ)	4	AU
	PF-3-½-38	. . . . . FASTENER (DZ)	4	AU
		*		
-42	R-4002	. . . . PANEL, Radio control (JOHJ)	1	DV
	C-628/ARC-27	. . . . PANEL, Radio control (GFAE)	1	D
	SB-327/ARC-44	. . . . PANEL, Radio control (GFAE)	1	EH

Figure and Index Number	Part Number	1 2 3 4 5 6 7 Description	Units per Assembly	Usable On Code
81-43	42E2127-1	. . . . PANEL ASSEMBLY, Indicator lights	1	DS
	43E2127-1	. . . . PANEL ASSEMBLY, Indicator lights	1	EH
	AN3157-6	. . . . . LIGHT ASSEMBLY	3	DS
	AN3157-6	. . . . . LIGHT ASSEMBLY	2	EH
	AN3157-8	. . . . . LIGHT ASSEMBLY	1	DS,EH
	AN3121-313	. . . . . LAMP	4	DS,EH
	MS25010-1	. . . . . LIGHT, Panel	2	DS,EH
	42E2126-1	. . . . . PANEL, Plastic	1	DS
	43E2126-1	. . . . . PANEL, Plastic	1	EH
	42E2125-1	. . . . . PANEL, Metal	1	DS
	43E2125-1	. . . . . PANEL, Metal	1	EH
	43E2038-3	. . . . PANEL ASSEMBLY, Cover	1	DV
	42E2038-5	. . . . PANEL ASSEMBLY, Cover	1	DT
		Attaching Parts		
	PC-3-½	. . . . CUP (DZ)	4	AU
	PS-3-½	. . . . SPRING (DZ)	4	AU
	PF-3-½-38	. . . . FASTENER (DZ)	4	AU
		*		
	42E1190-1	. PEDESTAL INSTALLATION	1	AU
-44	42E1190-2	. . PEDESTAL ASSEMBLY	1	AU
-45	200PL-45	. MOUNT, Shock (LO)	2	AU
-46	200XPD90	. MOUNT, Shock (LO)	1	AU
-47	42E1103-10	. MOUNT, Shock	2	AU
	42E1090-1	. PANEL INSTALLATION, End LH	1	AU
	42E1090-2	. PANEL INSTALLATION, End RH	1	AU
-48	42E1090-3	. . PANEL ASSEMBLY, End LH	1	AU
-49	42E1090-4	. . PANEL ASSEMBLY, End RH	1	AU
	42E1100-2	. SHIELD INSTALLATION, Glare	1	BK
	42E1100-26	. SHIELD INSTALLATION, Glare	1	AH,BI
	42E1100-28	. SHIELD INSTALLATION, Glare	1	FI
	42E1100-30	. SHIELD INSTALLATION, Glare	1	FK
	42E1173-1	. . SHIELD ASSEMBLY, Glare	1	DS
	42E1173-2	. . SHIELD ASSEMBLY, Glare	1	EH
-50	42E1100-4	. . SHIELD ASSEMBLY, Glare	1	BK
	42E1100-27	. . SHIELD ASSEMBLY, Glare	1	AH,BI
	42E1100-29	. . SHIELD ASSEMBLY, Glare	1	FI
	42E1100-31	. . SHIELD ASSEMBLY, Glare	1	FK
	42E1173-3	. . SHIELD ASSEMBLY, Bonded	1	DS,EH
-51	42E1100-5	. . . STRAP ASSEMBLY	1	D
	15824	. . . . CATCH (CCL)	1	D
	15794	. . . . PLATE, Strike (CCL)	1	D
	42E1100-32	. . . . HINGE, Half	1	D
	42E1100-33	. . . . HINGE, Half	1	D
	42E1100-34	. . . . HINGE, Half	1	D
	42E1100-35	. . . . HINGE, Half	1	D
	42E1100-36	. . . . PIN	2	D

Equipment

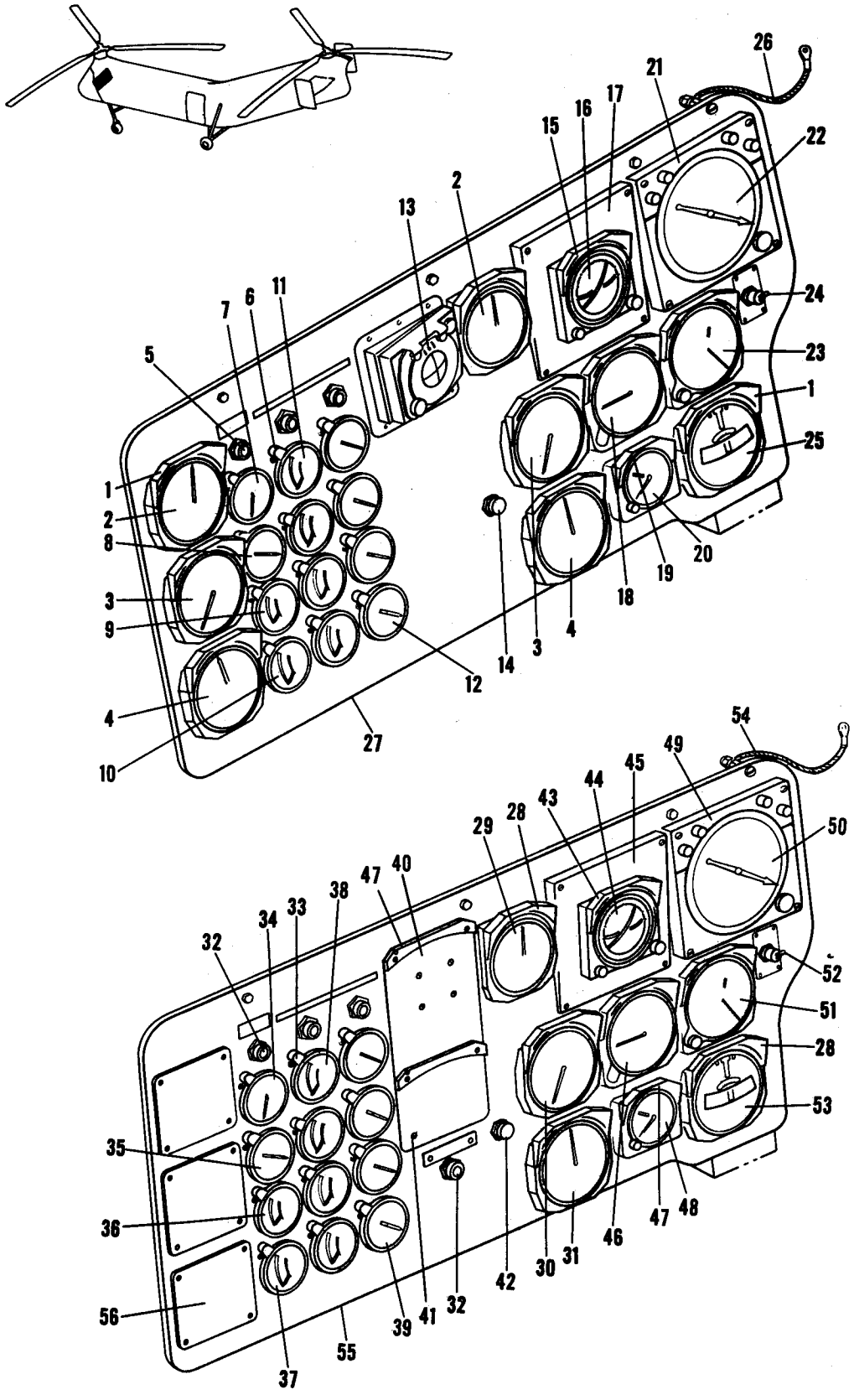

Figure 82. Instrument Panel

Figure and Index Number	Part Number	1 2 3 4 5 6 7 Description	Units per Assembly	Usable On Code
82-	22E1188	SUPPORT INSTALLATION, Instrument, see fig. 80	Ref	
	22E1189-1	. PANEL INSTALLATION, Flight and engine instrument	1	G,BM
	22E1189-6	. PANEL INSTALLATION, Flight and engine instrument	1	BN
-1	4855	. . FIXTURE, Light (GMC)	9	G,BM
-2	AC102	. . INDICATOR, Airspeed (LNR) (GFAE)	2	
-3	981-BX-8-023-1	. . INDICATOR, Dual tachometer (AN5530-2A equiv) (KO)	2	
	or			
	8DJ67FAK-1	. . INDICATOR, Dual tachometer (GEMI)	1	
-4	31890	. . INDICATOR, Manifold pressure (RAN) (GFAE)	2	J
		Attaching Parts		
	AN515B6R20	. . SCREW	2	
	AN515B6R16	. . SCREW	2	
	NAS487-15	. . NUT	4	
		———*———		
-5	AN3157-6	. . LIGHT	3	J
	AN3121-313	. . LAMP	3	J
-6	5299-24	. . FIXTURE, Light (GMC)	12	
-7	162-09-140	. . INDICATOR, Fuel quantity (AVEN)	1	
-8	25200A15B1-1A1	. . INDICATOR, Fuel press. (ECP) (GFAE)	1	
-9	147B32A	. . INDICATOR, Cyl hd temp (LEN) (GFAE)	1	
-10	147B30A	. . INDICATOR, Carb air temp (LEN) (GFAE)	1	
-11	147B31A	. . INDICATOR, Oil temp (LEN) (GFAE)	4	
-12	25101A2C1B1	. . INDICATOR, Oil press. (ECP) (GFAE)	4	
-13	2C1565-90A	. . INDICATOR, Course (GFAE)	1	G,BM
	or			
	18E1052-3	. . PLATE, Cover	1	J
	4855	. . FIXTURE, Light (used with 2C1565-90A) (GMC)	Ref	
-14	W-1700-⅛D	. . VALVE, Purge (WTR)	1	
-15	4790	. . FIXTURE, Light (GMC)	1	
-16	14602-1J-D1	. . INDICATOR, Vertical gyro (ECP) (GFAE)	1	
		Attaching Parts		
	AN507B632R16	. . SCREW	4	
		———*———		
-17	22E1194-1	. . PLATE, Adapter	1	
		Attaching Parts		
	AN23-24	. . BOLT	2	
	AN23-10	. . BOLT	2	
	A6939-1032-24G	. . NUT (TIN)	4	
	AN960C10	. . WASHER	4	
		———*———		
-18	716BU-4-052	. . INDICATOR, Rate of climb (KO) (GFAE)	1	
	or			
	1645-6M-A1	. . INDICATOR, Rate of climb (ECP) (GFAE)	1	
-19	4885	. . FIXTURE, Light (GMC)	1	
-20	2149	. . CLOCK (EG) (GFAE)	1	
-21	4789	. . FIXTURE, Light (GMC)	1	
-22	15700	. . INDICATOR, Gyro compass (TEM) (GFAE)	1	
		Attaching Parts		
	AN501C10-24	. . SCREW	2	J
	AN501C10-14	. . SCREW	2	
	A6939-1032-24G	. . NUT (TIN)	4	
		———*———		
-23	671CPX4-037	. . INDICATOR, Altimeter (KO) (GFAE)	1	
	or			
	671BU010	. . INDICATOR, Altimeter (KO) (GFAE)	1	
-24	AN3021-2	. . SWITCH, Toggle	1	
-25	RCA2	. . INDICATOR, Turn and bank (AZF) (GFAE)	1	
-26	AN749-3-5	. . JUMPER, Bonding	1	
-27	22E1190-1	. . PANEL ASSEMBLY	1	J

Figure and Index Number	Part Number	Description 1 2 3 4 5 6 7	Units per Assembly	Usable On Code
82-		*Attaching Parts*		
	AN6DD16A	. . BOLT	1	
	AN6DD17A	. . BOLT	3	
	AN6DD25A	. . BOLT	1	
	AN365D624	. . NUT	5	
	J-2049-3D	. . WASHER, Snubbing (LO)	7	
	AN960D616	. . WASHER	10	
		———*———		
	42E1103	SUPPORT INSTALLATION, Instrument, see fig. 81	Ref	
	42E1089-4	. PANEL INSTALLATION, Flight and instrument	1	AP
	42E1089-5	. PANEL INSTALLATION, Flight and instrument	1	AH,BI
	42E1089-6	. PANEL INSTALLATION, Flight and instrument	1	FK
	42E1089-7	. PANEL INSTALLATION, Flight and instrument	1	BK
	42E1089-1	. PANEL INSTALLATION, Flight and instrument	1	FL
-28	4855	. . FIXTURE, Light (GMC)	6	
-29	AC102	. . INDICATOR, Airspeed (LNR) (GFAE)	1	
-30	981BX-8-023-1	. . INDICATOR, Dual tachometer (KO) (AN5530-2A equiv)	1	
	or			
	8DJ67FAK-1	. . INDICATOR, Dual tachometer (GEMI)	1	
		Attaching Parts		
	AN515B6R20	. . SCREW	4	
	NAS487-15	. . NUT	4	
		———*———		
-31	AW2¾-25L	. . INDICATOR, Manifold press. (UG) (GFAE)	1	AU
-32	AN3157-6	. . LIGHT	3	AQ
	AN3157-6	. . LIGHT	4	AP,D
	AN3121-313	. . LAMP	3	AQ
	AN3121-313	. . LAMP	4	AP,D
-33	5299-24	. . FIXTURE, Light (GMC)	12	
-34	162-09-140	. . INDICATOR, Fuel quantity (AVEN)	1	
-35	25200A15B1-1A1	. . INDICATOR, Fuel press. (ECP) (GFAE)	1	
-36	147B32A	. . INDICATOR, Cyl hd temp (LEN) (GFAE)	1	
-37	147B30A	. . INDICATOR, Carb air temp (LEN) (GFAE)	1	
-38	147B31A	. . INDICATOR, Oil temp (LEN) (GFAE)	4	
-39	25101A2C1B1	. . INDICATOR, Oil press. (ECP) (GFAE)	4	
-40	42E1091-8	. . PLATE ASSEMBLY, Adapter	1	AU
		Attaching Parts		
-41	AN515B6R18	. . SCREW	4	
	AN365B632	. . NUT	4	
	AN960PD6L	. . WASHER	4	
		———*———		
-42	W1700-⅛D	. . VALVE, Purge (WTR)	1	
-43	4790	. . FIXTURE, Light (GMC)	1	
-44	14602-1J-D1	. . INDICATOR, Vertical gyro (ECP) (GFAE)	1	
-45	22E1194-1	. . PLATE, Adapter	1	
-46	716BU-4-052	. . INDICATOR, Rate of climb (KO) (GFAE)	1	
	or			
	1645-6M-A1	. . INDICATOR, Rate of climb (ECP) (GFAE)	1	
-47	4885	. . FIXTURE, Light (GMC)	3	
-48	2149	. . CLOCK (EG) (GFAE)	1	
-49	4789	. . FIXTURE, Light (GMC)	1	
-50	15700	. . INDICATOR, Gyro compass (TEM) (GFAE)	1	
		Attaching Parts		
	AN501C10-16	. . SCREW	2	
	AN501C10-24	. . SCREW	2	
	A6939-1032-24A	. . NUT (TIN)	4	
		———*———		
-51	671CPX4-037	. . INDICATOR, Altimeter (KO) (GFAE)	1	
	or			
	671BU010	. . INDICATOR, Altimeter (KO) (GFAE)	1	
-52	AN3021-2	. . SWITCH, Toggle	1	
-53	RCA2	. . INDICATOR, Turn and bank (AZF) (GFAE)	1	

Figure and Index Number	Part Number	1 2 3 4 5 6 7 Description	Units per Assembly	Usable On Code
82-54	AN749-3-5	. . JUMPER, Bonding	1	
-55	42E1091-1	. . PANEL ASSEMBLY	1	BK,BO
	42E1091-10	. . PANEL ASSEMBLY	1	FK,FL
		Attaching Parts		
	AN6DD16A	. . BOLT	1	
	AN6DD23A	. . BOLT	3	
	AN6DD25A	. . BOLT	1	
	AN365D624	. . NUT	5	
	J-2049-3D	. . WASHER, Snubbing (LO)	6	
	AN960PD616	. . WASHER	10	
		———*———		
-56	18E1052-1	. . PLATE, Cover	3	
		Attaching Parts		
	AN515DD6-8	. . SCREW	4	
	AN365D632	. . NUT	4	
	AN960D6L	. . WASHER	3	
		———*———		

Equipment

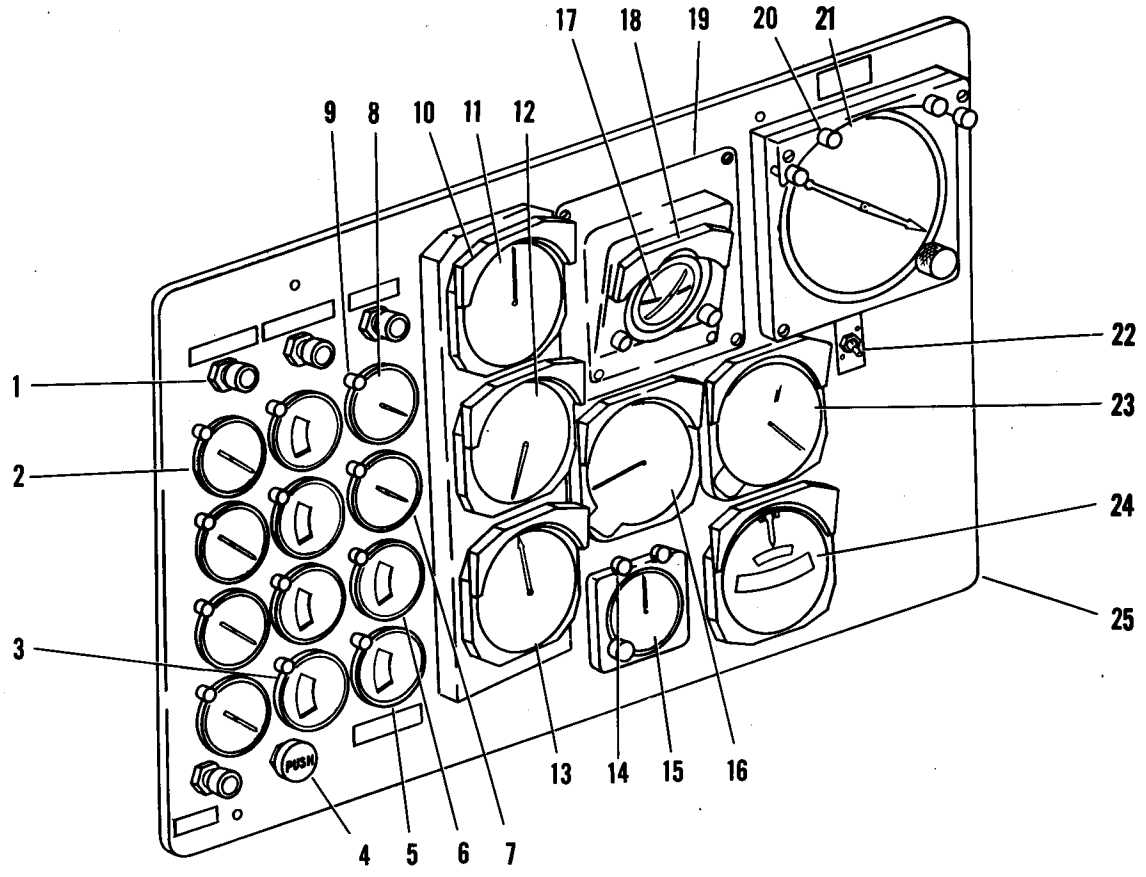

Figure 82A. Instrument Panel, H-21B 53-4346 thru 53-4402, 54-4000 thru 54-4008, and 55-5127 thru 55-5131

Figure and Index Number	Part Number	Description 1 2 3 4 5 6 7	Units per Assembly	Usable On Code
82A-	42E1213-2	PANEL INSTALLATION, Instrument	1	FQ
	42E1172-2	. PANEL ASSEMBLY, Flight and engine instrument	1	FQ
-1	AN3157-6	. . LIGHT ASSEMBLY	4	
	AN3121-313	. . LAMP	4	
-2	25101A2C1B1	. . INDICATOR, Oil press. (ECP) (GFAE)	4	
-3	147B31A	. . INDICATOR, Oil temp (LEN) (GFAE)	4	
-4	W1700-1/8D	. . VALVE, Purge (WTR)	1	
-5	147B30A	. . INDICATOR, Carb air temp (LEN) (GFAE)	1	
-6	147B32A	. . INDICATOR, Cyl hd temp (LEN) (GFAE)	1	
-7	25200A15B1-1A1	. . INDICATOR, Fuel press. (ECP) (GFAE)	1	
-8	162-09-140	. . INDICATOR, Fuel quantity (AVEN)	1	
-9	7919-24	. . FIXTURE, Light (GMC)	12	FQ,EH
-10	4855	. . FIXTURE, Light (GMC)	6	
	AN3140-327	. . LAMP	6	

Figure and Index Number	Part Number	Description 1 2 3 4 5 6 7	Units per Assembly	Usable On Code
82A-11	AC102	. . INDICATOR, Airspeed (LNR) (GFAE)	1	
	or			
	MS28045W1	. . INDICATOR, Airspeed	1	
-12	981BX-8-023-1	. . INDICATOR, Dual tachometer (KO)	1	
	or			
	8DJ67FAK-1	. . INDICATOR, Dual tachometer (GEMI)	1	
-13	AW2¾-25L	. . INDICATOR, Manifold press. (UG) (GFAE)	1	
		Attaching Parts		
	AN515B6R36	. . SCREW	6	
	AN515B6R28	. . SCREW	6	
	AN365B632	. . NUT	12	
	AN960PD6L	. . WASHER	12	
		————*————		
-14	6815-24	. . FIXTURE, Light (GMC)	2	FQ,EH
	AN3140-327	. . LAMP	2	
-15	22322-S-ET12	. . CLOCK (WW) (GFAE)	1	FQ,EH
		Attaching Parts		
	AN515B6R20	. . SCREW	2	
		————*————		
-16	716BU-4-052	. . INDICATOR, Rate of climb (KO) (GFAE)	1	
		Attaching Parts		
	AN515B6R22	. . SCREW	2	
	AN515B6B18	. . SCREW	1	
	NAS487-17	. . NUT	3	
		————*————		
-17	14602-1J-D1	. . INDICATOR, Vertical gyro (ECP) (GFAE)	1	
		Attaching Parts		
	AN507B632R14	. . SCREW	2	
	AN515B6R14	. . SCREW	2	
	AN365B632	. . NUT	4	
		————*————		
-18	4790	. . FIXTURE, Light (GMC)	1	
	AN3140-327	. . LAMP	1	
-19	22E1194-1	. . PLATE, Adapter	1	
		Attaching Parts		
	AN501C10-12	. . SCREW	4	
	A6939-1032-24A	. . NUT (TIN)	4	
		————*————		
-20	4789	. . FIXTURE, Light (GMC)	1	
-21	15700	. . INDICATOR, Gyro compass (TEM) (GFAE)	1	J,FJ
		Attaching Parts		
	AN501C10-28	. . SCREW	2	
	AN501C10-16	. . SCREW	2	
	A6939-1032-24A	. . NUT (TIN)	4	
		————*————		
-22	AN3021-2	. . SWITCH, Toggle	1	
-23	671CPX4-037	. . INDICATOR, Altimeter (KO) (GFAE)	1	
		Attaching Parts		
	AN515B6R22	. . SCREW	2	
	AN515B6R18	. . SCREW	1	
	NAS487-17	. . NUT	3	
		————*————		
-24	RCA2	. . INDICATOR, Turn and bank (AZF) (GFAE)	1	
		Attaching Parts		
	AN515B6R20	. . SCREW	2	
	AN515B6R18	. . SCREW	2	
	NAS487-17	. . NUT	2	
	NAS487-20	. . NUT	2	
		————*————		
-25	42E1163-2	. . PANEL ASSEMBLY, Instrument	1	FQ

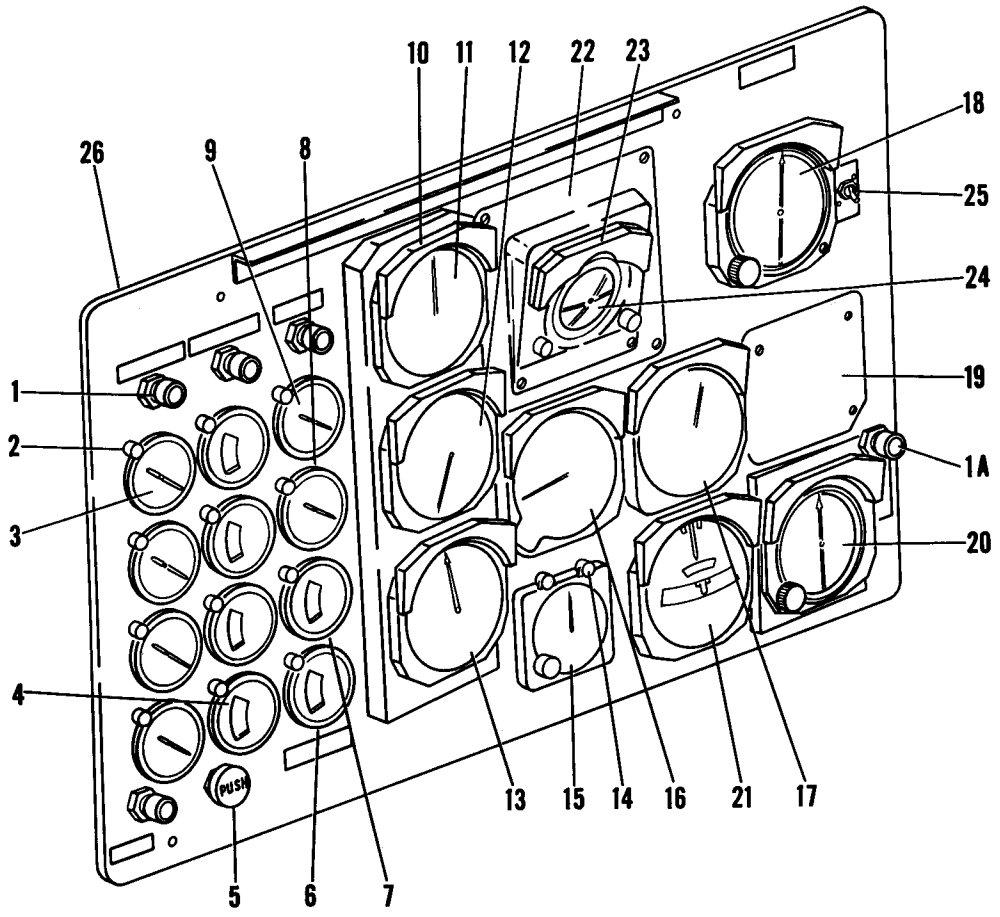

Figure 82B. Instrument Panel, H-21C 55-4132 thru 55-4221, 56-2015 thru 56-2160, and 56-4343 thru 56-4354

Figure and Index Number	Part Number	Description 1 2 3 4 5 6 7	Units per Assembly	Usable On Code
82B-	42E1213-1	PANEL INSTALLATION, Instrument	1	EH
	42E1172-1	. PANEL ASSEMBLY, Flight and engine instrument	1	EH
-1	AN3157-6	. . LIGHT ASSEMBLY	4	
-1A	AN3157-8	. . LIGHT ASSEMBLY	1	
	AN3121-313	. . LAMP	5	
-2	7919-24	. . FIXTURE, Light (GMC)	12	FQ,EH
-3	25101A2C1B1	. . INDICATOR, Oil press. (ECP) (GFAE)	4	
-4	147B31A	. . INDICATOR, Oil temp (LEN) (GFAE)	4	
-5	W1700-⅛D	. . VALVE, Purge (WTR)	1	
-6	147B30A	. . INDICATOR, Carb air temp (LEN) (GFAE)	1	
-7	147B32A	. . INDICATOR, Cyl hd temp (LEN) (GFAE)	1	
-8	25200A15B1-1A1	. . INDICATOR, Fuel press. (ECP) (GFAE)	1	
-9	162-09-140	. . INDICATOR, Fuel quantity (AVEN)	1	HQ
	JG130A-43	. . . INDICATOR, Fuel quantity (MH)	1	HI

Figure and Index Number	Part Number	1 2 3 4 5 6 7 Description	Units per Assembly	Usable On Code
82B-10	4855	. . FIXTURE, Light (GMC)	9	
	AN3140-327	. . LAMP	9	
-11	AC102	. . INDICATOR, Airspeed (LNR) (GFAE)	1	
	or			
	MS28045W1	. . INDICATOR, Airspeed	1	
-12	981BX-8-023-1	. . INDICATOR, Dual tachometer (KO)	1	
	or			
	8DJ67FAK-1	. . INDICATOR, Dual tachometer (GEMI)	1	
-13	AW3-10A	. . INDICATOR, Manifold press. (UG) (GFAE)	1	
		Attaching Parts		
	AN515B6R36	. . SCREW	5	
	AN515B6R28	. . SCREW	5	
	NAS487-15	. . NUT	10	
	AN960D6L	. . WASHER	9	
		———*———		
	42E1225-1	. . CLAMP ASSEMBLY	1	
-14	6815-24	. . FIXTURE, Light (GMC)	1	FQ,EH
	AN3140-327	. . LAMP	1	
-15	2232-S-ET12	. . CLOCK (WW) (GFAE)	1	FQ,EH
		Attaching Parts		
	AN515B6R20	. . SCREW	2	
		———*———		
-16	716BU-4-052	. . INDICATOR, Rate of climb (KO) (GFAE)	1	
-17	671BX-010D	. . INDICATOR, Altimeter (KO) (GFAE)	1	
-18	603654-21	. . INDICATOR, Directional gyro (SPE) (GFAE)	1	EH
-19	42E1208-1	. . PLATE, Cover	1	EH
-20	2C1565-91A	. . INDICATOR, Radio compass (ECP) (GFAE)	1	EH
		Attaching Parts		
	AN515B6R22	. . SCREW	10	
	AN515B6R18	. . SCREW	5	
	NAS487-17	. . NUT	15	
		———*———		
-21	RCA2	. . INDICATOR, Turn and bank (AZF) (GFAE)	1	
		Attaching Parts		
	AN515B6R20	. . SCREW	4	
		———*———		
-22	22E1194-1	. . PLATE, Adapter	1	
		Attaching Parts		
	AN501C10-12	. . SCREW	4	
	A6939-1032-24A	. . NUT (TIN)	4	
		———*———		
-23	4790	. . FIXTURE, Light (GMC)	1	
	AN3140-327	. . LAMP	1	
-24	14602-1J-D1	. . INDICATOR, Vertical gyro (ECP) (GFAE)	1	
		Attaching Parts		
	AN507B632R14	. . SCREW	2	
	AN515B6R14	. . SCREW	2	
	AN365B632	. . NUT	4	
		———*———		
-25	AN3021-2	. . SWITCH, Toggle	1	
-26	42E1163-1	. . PANEL ASSEMBLY, Instrument	1	EH

Equipment

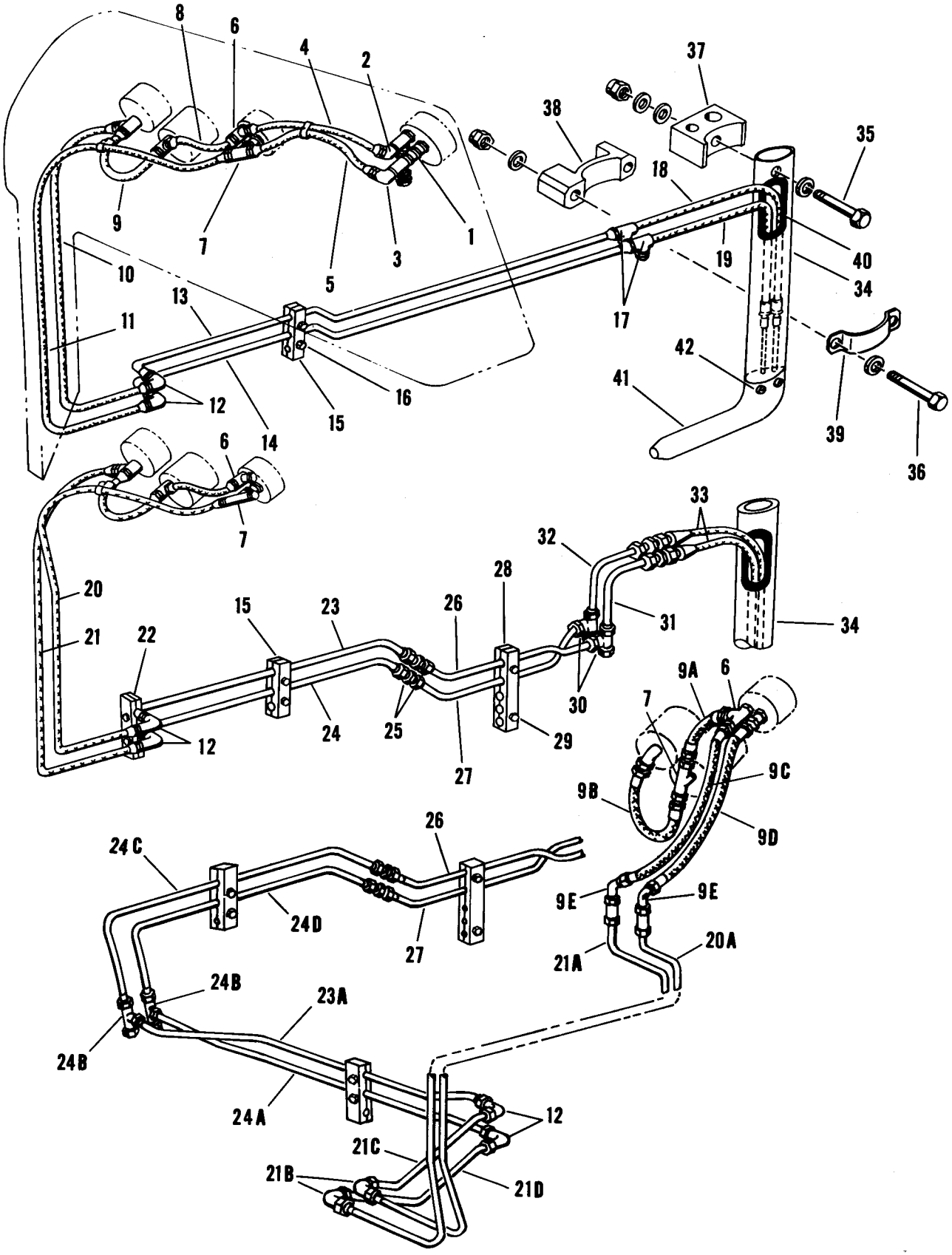

Figure 83. Pitot-Static Air Lines

Figure and Index Number	Part Number	Description 1 2 3 4 5 6 7	Units per Assembly	Usable On Code
83-	22E1080-9	AIR LINES INSTALLATION, Pitot-static	1	J
	42E1080-1	AIR LINES INSTALLATION, Pitot-static	1	JK
	42E1176-44	. TUBING INSTALLATION, Pitot-static and manifold pressure	1	FQ,EH
	AN911-1D	. NIPPLE	3	J
-1	AN910-1D	. COUPLING	1	J
	AN917-1D	. TEE	2	J
-2	AN823-4D	. ELBOW	1	J
-3	AN822-4D	. ELBOW	1	J
	AN816-4D	. NIPPLE	2	J
	AN929-4	. CAP ASSEMBLY	2	J
-4	AN6270-4-16⅝	. HOSE ASSEMBLY	1	J
-5	AN6270-4-15	. HOSE ASSEMBLY	1	J
	AN742D10C	. CLAMP	2	J
-6	AN826-4D	. TEE	1	
	AN929-4	. CAP ASSEMBLY	1	JK
-7	AN825-4D	. TEE	1	
	AN911-1D	. NIPPLE	1	J,JK
	AN816-4D	. NIPPLE	1	FQ,EH
	AN910-1D	. COUPLING	1	J,JK
	AN929-4	. CAP ASSEMBLY	1	JK
-8	AN6270-4-9⅜	. HOSE ASSEMBLY	1	J,JK
	AN826-4D	. TEE	2	J,JK
-9	AN6270-4-8¾	. HOSE ASSEMBLY	1	J,JK
-9A	AN6270-4-6¼	. HOSE ASSEMBLY	1	FQ,EH
-9B	AN6270-4-9½	. HOSE ASSEMBLY	1	FQ,EH
-9C	AN6270-4-15	. HOSE ASSEMBLY	1	FQ,EH
-9D	AN6270-4-16	. HOSE ASSEMBLY	1	FQ,EH
-9E	AN837-4D	. ELBOW	2	FQ,EH
	AN924-4D	. NUT	2	FQ,EH
	AN960D716	. WASHER	2	FQ,EH
	AN742D11C	. CLAMP	1	
-10	AN6270-4-30¾	. HOSE ASSEMBLY	1	J
-11	AN6270-4-40	. HOSE ASSEMBLY	1	J
	AN742D10C	. CLAMP	1	J,JK
-12	AN821-4D	. ELBOW	2	
-13	22E1080-2	. TUBE ASSEMBLY, Pitot-static	1	J
-14	22E1080-3	. TUBE ASSEMBLY, Pitot-pressure	1	J
-15	22E1080-7	. BLOCK, Spacer	2	
		Attaching Parts		
-16	AN3-10A	. BOLT	2	J
	AN3DD10A	. BOLT	2	AU
	AN365-1032	. NUT	2	J
	AN365D1032	. NUT	2	AU
	AN960D10L	. WASHER	4	J
	AN960PD10L	. WASHER	4	AU
		———*———		
	AN742D6CB	. CLAMP	2	
-17	AN824-4D	. TEE	2	J
	AN929-4	. CAP ASSEMBLY	2	J
-18	AN6270-4-31½	. HOSE ASSEMBLY	1	J
-19	AN6270-4-30½	. HOSE ASSEMBLY	1	J
	AN742D10C	. CLAMP	2	J
-20	AN6270-4-41½	. HOSE ASSEMBLY	1	
-20A	42E1176-22	. TUBE ASSEMBLY, Pitot-pressure	1	FQ,EH
-21	AN6270-4-33½	. HOSE ASSEMBLY	1	
-21A	42E1176-24	. TUBE ASSEMBLY, Pitot-static	1	FQ,EH
	AN924-4D	. NUT	2	FQ,EH
	AN960D716	. WASHER	2	FQ,EH
-21B	AN833-4D	. ELBOW	2	FQ,EH
-21C	42E1176-26	. TUBE ASSEMBLY, Pitot-pressure	1	FQ,EH
-21D	42E1176-28	. TUBE ASSEMBLY, Pitot-static	1	FQ,EH
-22	22E1081-30	. BLOCK, Spacer, see fig. 84	Ref	
-23	42E1080-4	. TUBE ASSEMBLY, Pitot-pressure	1	
-23A	42E1176-36	. TUBE ASSEMBLY, Pitot-pressure	1	FQ,EH
-24	42E1080-3	. TUBE ASSEMBLY, Pitot-static	1	

Figure and Index Number	Part Number	1 2 3 4 5 6 7 Description	Units per Assembly	Usable On Code
83-24A	42E1176-34	. TUBE ASSEMBLY, Pitot-static	1	FQ,EH
-24B	AN824-4D	. TEE	2	FQ,EH
	AN929-4	. CAP	2	FQ,EH
-24C	42E1176-38	. TUBE ASSEMBLY	1	FQ,EH
-24D	42E1176-42	. TUBE ASSEMBLY	1	FQ,EH
-25	AN815-4D	. UNION	2	AU
-26	42E1080-6	. TUBE ASSEMBLY, Pitot-pressure	1	AU
-27	42E1080-5	. TUBE ASSEMBLY, Pitot-static	1	AU
-28	42E1096-1	. FAIRLEAD ASSEMBLY	1	AU
		Attaching Parts		
-29	AN3DD12A	. BOLT	2	AU
	AN365D1032	. NUT	2	AU
	AN960PD10L	. WASHER	4	AU
		———*———		
-30	AN824-4D	. TEE	2	AU
	AN929-4	. CAP ASSEMBLY	2	AU
-31	42E1080-14	. TUBE ASSEMBLY, Pitot-pressure	1	AU
-32	42E1080-13	. TUBE ASSEMBLY, Pitot-static	1	AU
	AN815-4D	. UNION	2	AU
-33	AN6270-4-22	. HOSE ASSEMBLY	2	AU
	22E1005-1	. TUBE INSTALLATION, Pitot	1	
-34	22E1105-2	. . TUBE ASSEMBLY, Pitot	1	
		Attaching Parts		
-35	AN3-23A	. . BOLT	1	
-36	AN3-20A	. . BOLT	2	
	AN365-1032	. . NUT	3	
	AN960D10	. . WASHER	4	
	AN960D10L	. . WASHER	3	
		———*———		
-37	22E1005-5	. . SPACER	1	
-38	22E1005-6	. . SPACER	1	IG
	22E1005-10	. . SPACER	2	EW
-39	22E1005-3	. . STRAP	1	IG
	22E1005-3	. . STRAP	2	EW
-40	22E1005-9	. . STRIP, Channel	1	
-41	373DO2	. . TUBE, Pitot-static (KO) (GFAE)	1	
		Attaching Parts		
-42	AN501A10-4	. . SCREW	4	
	AN960D10L	. . WASHER	4	
	AN995F41	. . WIRE, Lock	AR	
		———*———		

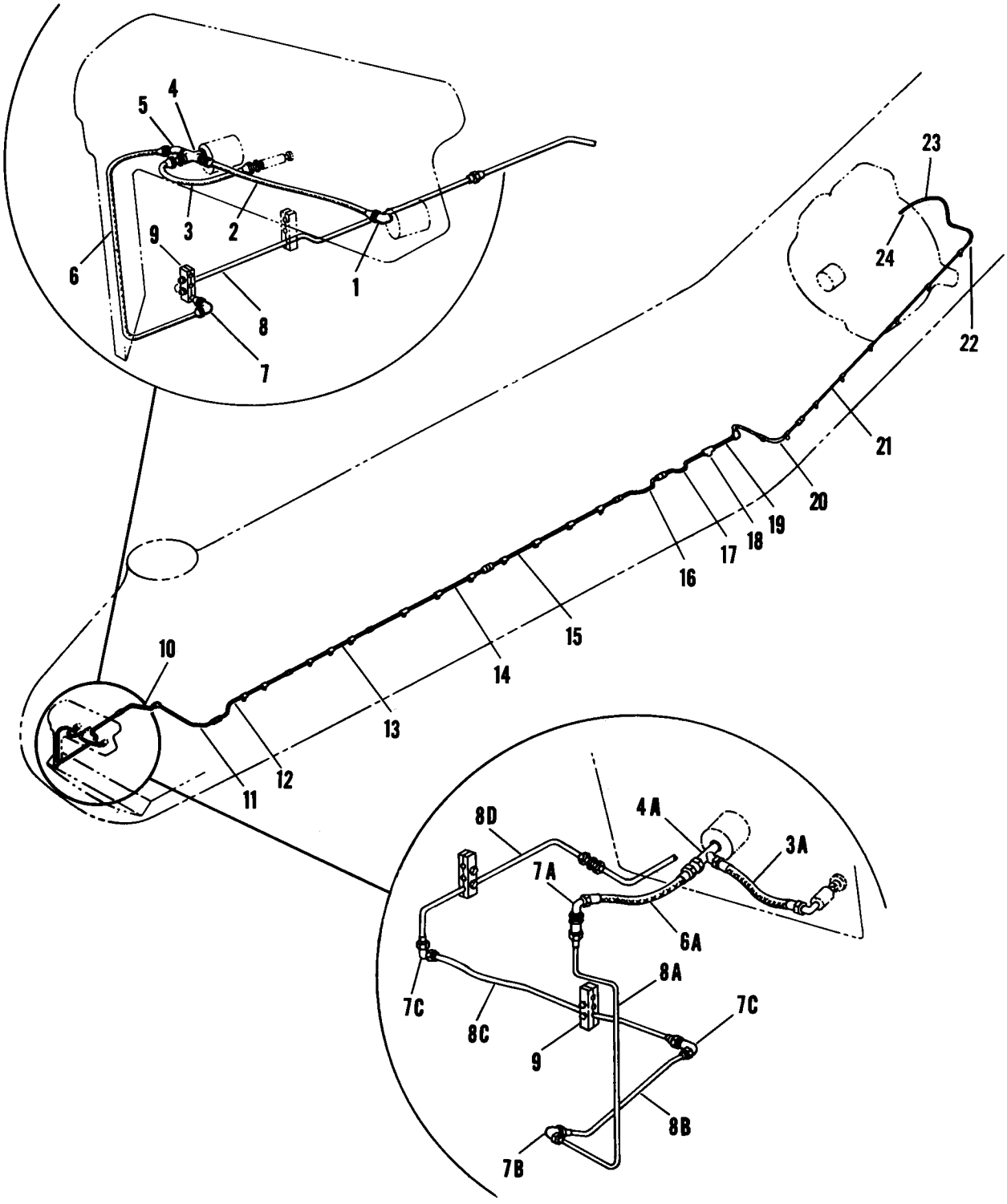

Figure 84. Manifold Pressure Lines

Figure and Index Number	Part Number	1 2 3 4 5 6 7 Description	Units per Assembly	Usable On Code
84-	22E1081-37	LINE INSTALLATION, Manifold pressure	1	A
	22E1081-50	LINE INSTALLATION, Manifold pressure	1	E
	42E1081-1	LINE INSTALLATION, Manifold pressure	1	JK
	42E1081-28	LINE INSTALLATION, Manifold pressure	1	JI,HQ
	42E1081-33	LINE INSTALLATION, Manifold pressure	1	JA,HI
	42E1176-44	TUBING INSTL, Pitot-static and manifold pressure, see fig. 83	Ref	FQ,EH
-1	AN822-4D	. ELBOW	1	J
-2	AN6270-4-13	. HOSE ASSEMBLY	1	J
-3	AN6270-4-9¾	. HOSE ASSEMBLY	1	J,JK
-3A	AN6270-4-6½	. HOSE ASSEMBLY	1	FQ,EH
	AN816-4D	. NIPPLE	3	J,JK
	AN823-4D	. ELBOW	1	FQ,EH
-4	AN918-1D	. CROSS	1	J
	MS29512-4	. GASKET	2	JK
	AN6290-4	. GASKET	1	FQ,EH
	AN924-4D	. NUT	2	AU
	AN784D4	. TEE	1	JK
-4A	AN804D4	. TEE	1	FQ,EH
	AN929-4	. CAP ASSEMBLY	2	JK
	AN911-1D	. NIPPLE	1	J
-5	AN823-4D	. ELBOW	1	J
	AN834-4D	. TEE	1	JK
-6	AN6270-4-33⅜	. HOSE ASSEMBLY	1	J
	AN6270-4-35½	. HOSE ASSEMBLY	1	JK
-6A	AN6270-4-14	. HOSE ASSEMBLY	1	FQ,EH
-7	AN821-4D	. ELBOW	1	J,JK
	AN924-4D	. NUT	2	FQ,EH
	AN960D716	. WASHER	2	FQ,EH
-7A	AN837-4D	. ELBOW	1	FQ,EH
-7B	AN833-4D	. ELBOW	1	FQ,EH
-7C	AN821-4D	. ELBOW	2	FQ,EH
-8	22E1081-6	. TUBE ASSEMBLY	1	J
	42E1081-17	. TUBE ASSEMBLY	1	JK
-8A	42E1176-20	. TUBE ASSEMBLY	1	FQ,EH
-8B	42E1176-30	. TUBE ASSEMBLY	1	FQ,EH
-8C	42E1176-32	. TUBE ASSEMBLY	1	FQ,EH
-8D	42E1176-40	. TUBE ASSEMBLY	1	FQ,EH
-9	22E1081-30	. BLOCK, Spacer	2	
	AN815-4D	. UNION	1	
-10	22E1081-38	. TUBE ASSEMBLY	1	J
	42E1081-7	. TUBE ASSEMBLY	1	AU
	AN833-4D	. ELBOW	1	J
	AN832-4D	. UNION	1	AU
	AN924-4D	. NUT	1	
	AN960D716	. WASHER	1	
-11	22E1081-40	. TUBE ASSEMBLY	1	J
	42E1081-3	. TUBE ASSEMBLY	1	AU
	AN832-4D	. UNION	1	J
	AN815-4D	. UNION	1	AU
	AN924-4D	. NUT	1	J
	AN960D716	. WASHER	1	J
-12	22E1081-31	. TUBE ASSEMBLY	1	A
	22E1081-44	. TUBE ASSEMBLY	1	E
	42E1081-26	. TUBE ASSEMBLY	1	AU
	AN815-4D	. UNION	4	
-13	22E1081-8	. TUBE ASSEMBLY	1	A
	22E1081-48	. TUBE ASSEMBLY	1	E
	42E1081-22	. TUBE ASSEMBLY	1	AU
-14	22E1081-9	. TUBE ASSEMBLY	1	A
	22E1081-46	. TUBE ASSEMBLY	1	E
	42E1081-20	. TUBE ASSEMBLY	1	AU
-15	22E1081-32	. TUBE ASSEMBLY	1	J
	42E1081-4	. TUBE ASSEMBLY	1	JJ,IS
	42E1081-29	. TUBE ASSEMBLY	1	JA,HI
-16	22E1081-43	. TUBE ASSEMBLY	1	J

Figure and Index Number	Part Number	1 2 3 4 5 6 7 Description	Units per Assembly	Usable On Code
84-	42E1081-5	. TUBE ASSEMBLY	1	JJ,IS
	42E1081-30	. TUBE ASSEMBLY	1	JA,HI
	AN832-4D	. UNION	1	
	AN924-4D	. NUT	1	
	AN960D716	. WASHER	2	AU
-17	22E1081-10	. TUBE ASSEMBLY	1	J
	42E1081-18	. TUBE ASSEMBLY	1	AU
	AN837-4D	. ELBOW	1	AU
	AN924-4D	. NUT	1	AU
	AN960D716	. WASHER	1	AU
	42E1081-6	. TUBE ASSEMBLY	1	AU
-18	AN824-4D	. TEE	1	
	AN929-4	. CAP ASSEMBLY	1	
-19	22E1081-3	. TUBE ASSEMBLY	1	
	AN837-4	. ELBOW	1	
	AN924-4	. NUT	1	
	AN960-716	. WASHER	1	J
	AN960D716	. WASHER	1	
-20	22E1081-26	. TUBE ASSEMBLY	1	J
	42E1081-24	. TUBE ASSEMBLY	1	AU
	AN815-4	. UNION	1	
-21	22E1081-11	. TUBE ASSEMBLY	1	J
	42E1081-8	. TUBE ASSEMBLY	1	AU
	AN924-4	. NUT	1	J
	AN960-716	. WASHER	2	J
	8-110	. NIPPLE (WIG)	1	
-22	22E1081-25	. HOSE INSTALLATION, Manifold pressure	1	J
	42E1081-2	. HOSE INSTALLATION, Manifold pressure	1	AU
	8-101	. . SOCKET (WIG)	1	
	8-101-12A	. . . SEAL (WIG)	1	
-23	AN6264-4-43	. . HOSE ASSEMBLY	1	J
	MS28741-4-0500	. . HOSE ASSEMBLY	1	AU
-24	22P4056-1	. . RESTRICTOR	1	
	or			
	22P4056-2	. . RESTRICTOR	1	
	AN742D6CB	. . CLAMP	21	J
	AN742D6CB	. . CLAMP	20	AU
	AN784-4	. . CLAMP	9	J
	AN784-4	. . CLAMP	4	AU
	AN742D10C	. . CLAMP	3	J
	AN742D10C	. . CLAMP	4	AU
	AN742D19C	. . CLAMP	1	J
	AN741D17C	. . CLAMP	1	AU

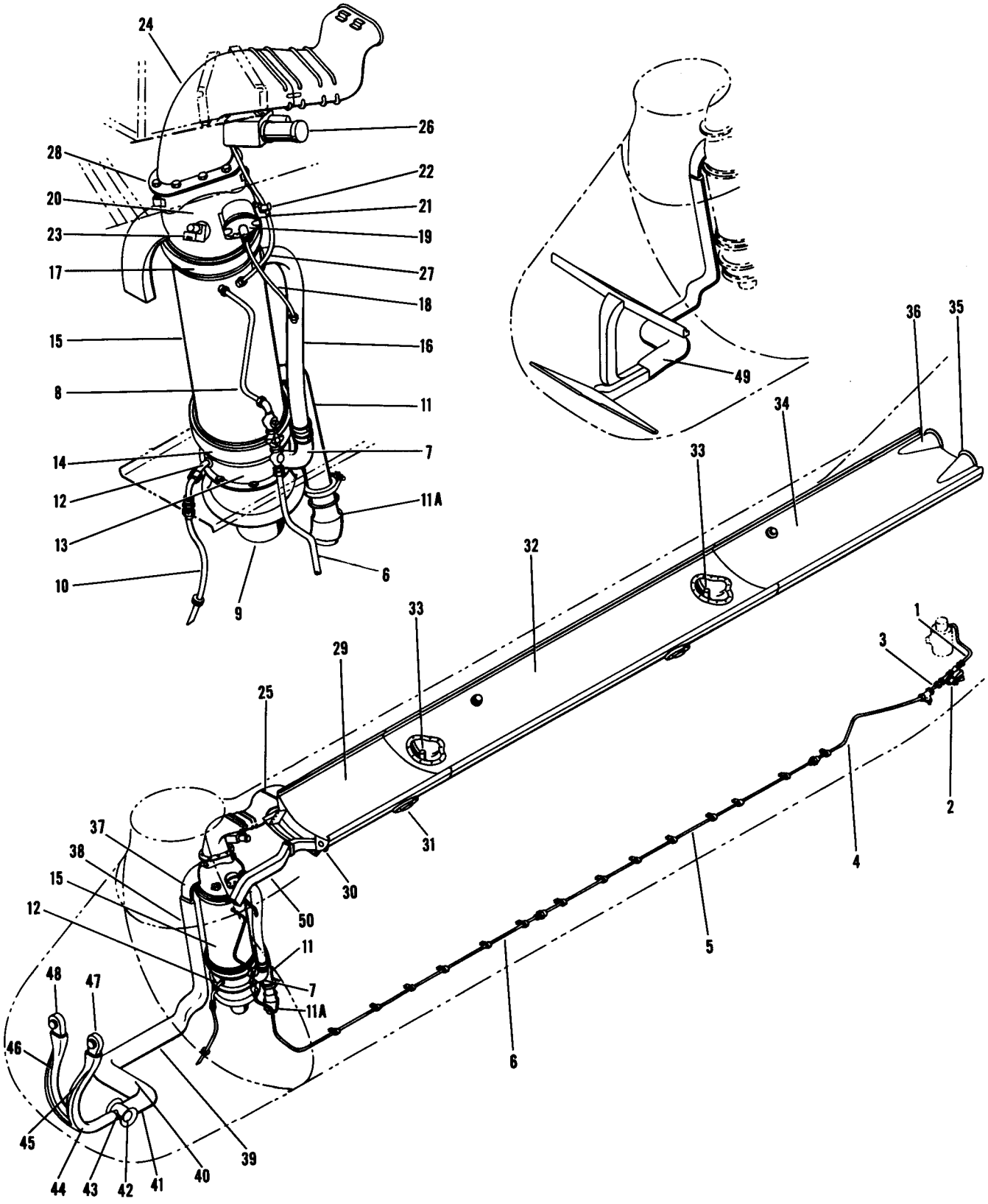

Figure 85. Heating System

Figure and Index Number	Part Number	Description 1 2 3 4 5 6 7	Units per Assembly	Usable On Code
85-	22E4002-1	HEATING SYSTEM INSTALLATION	1	J
	22E4002-2	HEATING SYSTEM INSTALLATION	1	AU
	22E4059-1	. LINE INSTALLATION, Cabin heater fuel	1	A
	22E4059-41	. LINE INSTALLATION, Cabin heater fuel	1	BP
	22E4059-42	. LINE INSTALLATION, Cabin heater fuel	1	BQ
	22E4059-2	. LINE INSTALLATION, Cabin heater fuel	1	HJ
	22E4059-46	. LINE INSTALLATION, Cabin heater fuel	1	HI
	AN833-3	. . ELBOW	1	
	MS29512-3	. . GASKET	1	
	AF934-190	. . PACKING, "O" ring	1	B
	AN929-3	. . CAP ASSEMBLY	1	B
	AN924-3	. . NUT	1	
-1	AN6264-3-35	. . HOSE ASSEMBLY	1	A,BP
	MS28741-3-0350	. . HOSE ASSEMBLY	1	BQ
	MS28741-3-0174	. . HOSE ASSEMBLY	1	HJ
■	MS28741-3-0120	. . HOSE ASSEMBLY	1	HI
	AN919-2D	. . REDUCER	1	HJ
	MS28741-4-0114	. . HOSE ASSEMBLY	1	HJ
	AN837-4D	. . ELBOW	1	HJ
	AN924-4D	. . NUT	1	HJ
	AN960D716	. . WASHER	2	HJ
	AN894D4-3	. . BUSHING	1	HI
	MS29512-4	. . GASKET	1	HI
	AN924-4D	. . NUT	2	HI
	AN833-4D	. . ELBOW	1	HI
	AN960D716	. . WASHER	1	HI
	MS28741-4-0076	. . HOSE ASSEMBLY	1	HJ
	22E4059-47	. . TUBE ASSEMBLY	1	HI
	AN816-3D	. . NIPPLE	1	J
	AN815-4D	. . UNION	1	AU
-2	40A31	. . VALVE, Solenoid (SUC)	1	J
	09C27	. . VALVE, Solenoid (SUC)	1	AU
	or			
	AV1B1474	. . VALVE, Solenoid (GCO)	1	AU
	22E4059-25	. . CABLE ASSEMBLY, Electrical	1	AU
	AN3100C-10SL-4P	. . RECEPTACLE	1	AU
	AN3108A-10SL-4S	. . PLUG	1	AU
	AF-21	. . FERRULE (SIE)	2	AU
	or			
	162-002	. . FERRULE (AMP)	2	AU
	AN3054-4	. . NUT	2	AU
	AN816-4D	. . NIPPLE	1	AU
-3	22E4059-6	. . TUBE ASSEMBLY	1	J
	AN824-4D	. . TEE	1	J
	AN938D4	. . TEE	1	AU
	AN815-4D	. . UNION	2	AU
	AN832-4D	. . UNION	1	AU
	AN924-4D	. . NUT	1	AU
	MS29512-4	. . GASKET	6	HJ
	MS29512-4	. . GASKET	5	HI
	AN929-4	. . CAP ASSEMBLY	1	J
	7101-1	. . VALVE, Drain (KOE)	1	AU
	AN742D18CB	. . CLAMP	1	HJ
■	MS21919F16	. . CLAMP	1	HI
	22E4059-16	. . TUBE ASSEMBLY, Drain (from valve)	1	HJ
	22E4059-50	. . HOSE ASSEMBLY, Drain	1	HI
	AN832-4D	. . UNION	1	AU
	AN924-4D	. . NUT	1	AU
	AN960D716	. . WASHER	1	AU
-4	22E4059-27	. . TUBE ASSEMBLY	1	A,BP
	MS28741-4-3180	. . HOSE ASSEMBLY	1	BQ
	22E4059-15	. . TUBE ASSEMBLY	1	HJ
■	MS28741-4-0210	. . HOSE ASSEMBLY	1	HI
	AN815-4D	. . UNION	1	A,BP

Figure and Index Number	Part Number	Description 1 2 3 4 5 6 7	Units per Assembly	Usable On Code
85-5	22E4059-4	. . TUBE ASSEMBLY	3	A
	22E4059-4	. . TUBE ASSEMBLY	1	BP
	22E4059-37	. . TUBE ASSEMBLY	1	BP
	22E4059-39	. . TUBE ASSEMBLY	1	BP
	AN815-4D	. . UNION	3	
-6	22E4059-3	. . TUBE ASSEMBLY	1	A,BP
	MS28741-4-3040	. . HOSE ASSEMBLY	1	HJ
	MS28741-4-3300	. . HOSE ASSEMBLY	1	HI
	AN837-4D	. . ELBOW	1	HJ
	AN832-4D	. . UNION	1	HI
	AN924-4D	. . NUT	1	AU
	AN960D716	. . WASHER	1	AU
	784-4	. CLAMP (AP)	3	
	22E4021-1	. HEATER INSTALLATION	1	J
	22E4021-20	. HEATER INSTALLATION	1	C
	22E4021-36	. HEATER INSTALLATION	1	D
-7	A06C03	. . CONTROL ASSEMBLY, Fuel (SUC)	1	J
	08C69	. . CONTROL ASSEMBLY, Fuel (SUC)	1	AU
		Attaching Parts		
	AN3-16A	. . BOLT	2	
	AN365-1032	. . NUT	2	
	AN960D10	. . WASHER	4	
	AN960D10L	. . WASHER	2	
		———*———		
-8	22E4021-7	. . TUBE ASSEMBLY	1	
-9	X702-68D	. . BLOWER, Aircraft (JOI)	1	
	or			
	M6921A-8A	. . BLOWER, Aircraft (DAE)	1	
		Attaching Parts		
	AN3-6A	. . BOLT	8	
	AN960D10L	. . WASHER	8	
		———*———		
	A81390	. . . FILTER, Radio noise (JOI)	1	
	22E4061-1	. . GASKET	2	
	CE31C751G	. . CAPACITOR (CLD)	2	D,EH
-10	22E4021-5	. . TUBE ASSEMBLY	1	
-11	100913	. . DUCT ASSEMBLY, Cabin heater exhaust (FAKB)	1	
	518-3.593-B	. . CLAMP (MAR)	2	
-11A	100912	. . DUCT ASSEMBLY. Cabin heater exhaust (FAKB)	1	
	22E4021-2	. . HEATER ASSEMBLY	1	J
	22E4021-23	. . HEATER ASSEMBLY	1	ED
	22E4021-39	. . HEATER ASSEMBLY	1	KB
	22E4021-42	. . HEATER ASSEMBLY	1	KA
-12	22E4021-6	. . . TUBE ASSEMBLY	1	J,JZ
	22E4021-40	. . . TUBE ASSEMBLY	1	KA
	AN823-6	. . . ELBOW	1	
-13	22E4044-1	. . . ADAPTER, Cabin heater lower	1	J
	22E4044-4	. . . ADAPTER, Cabin heater lower	1	DP
	22E4044-9	. . . ADAPTER, Cabin heater lower	1	KC
	22E4044-10	. . . ADAPTER, Cabin heater lower	1	KA
-14	01C71	. . . CLAMP (SUC)	1	
-15	D97A28	. . . HEATER, Combustion (SUC)	1	J
	E97A28	. . . HEATER, Combustion (SUC)	1	AU
	32A15	. . . . PLUG, Ignition spark (SUC)	1	
-16	100914	. . . DUCT ASSEMBLY, Combustion air (FAKB)	1	J
	101189	. . . DUCT ASSEMBLY, Combustion air (FAKB)	1	ED
	102789	. . . DUCT ASSEMBLY, Combustion air (FAKB)	1	DU
	22E4021-11	. . . HOSE, Combustion air duct	1	J
	22E4021-9	. . . HOSE, Combustion air duct	1	AU
	AN737RM82	. . . CLAMP	2	J
	AN737RM74	. . . CLAMP	2	AU
	518-2.593-B	. . . CLAMP (MAR)	1	
-17	01C70	. . CLAMP (SUC)	1	
-18	AN6270-6-13	. . HOSE ASSEMBLY	1	J
	22E4196-1	. . RESTRICTOR, Air pressure switch	1	J
	AN742D12C	. . CLAMP	2	AU
	AN919-6D	. . REDUCER	1	AU

Figure and Index Number	Part Number	1 2 3 4 5 6 7 Description	Units per Assembly	Usable On Code
85-	MS29512-4	. . GASKET	1	AU
	22E4021-21	. . PLUG	1	AU
-19	PG208-B5	. . SWITCH, Air pressure (MH)	1	J
	PE-904-5	. . SWITCH, Air pressure (AEO)	1	AU
	or			
	P-904-5	. . SWITCH, Air pressure (AEO)	1	AU
		Attaching Parts		
	AN530-8-8	. . SCREW	4	J
	AN365D1032	. . NUT	2	AU
	AN960D8L	. . WASHER	4	J
	AN960D10	. . WASHER	6	AU
		———*———		
-20	22E4021-3	. . ADAPTER ASSEMBLY	1	J
	22E4021-22	. . ADAPTER ASSEMBLY	1	AU
	22E4054-1	. . . DOME ASSEMBLY	1	A
	22E4054-22	. . . DOME ASSEMBLY	1	E,HJ
	22E4054-30	. . . DOME ASSEMBLY	1	HI
-21	17320-4-225	. . . SWITCH, Cycle (FEN)	1	A
	17320-19	. . . THERMOSWITCH (FEN)	1	B
		Attaching Parts		
	AN530-8-8	. . . SCREW	3	
	AN960D8L	. . . WASHER	3	
		———*———		
	22E4061-3	. . . GASKET	1	
-22	17321-2-120	. . . SWITCH, Blower (FEN)	1	J
	18423-0-120	. . . SWITCH, Blower (FEN)	1	AU
		Attaching Parts		
	AN530-8-8	. . . SCREW	3	
	AN960D8L	. . . WASHER	3	
		———*———		
	22E4061-3	. . . GASKET	1	
-23	17322-3-350	. . . SWITCH, Overheat (FEN)	1	J
	18422-0-350	. . . SWITCH, Overheat (FEN)	1	AU
		Attaching Parts		
	AN530-8-8	. . . SCREW	3	
	AN960D8L	. . . WASHER	3	
		———*———		
	22E4061-3	. . . GASKET	1	
	22E4021-4	. . DUCT ASSEMBLY, Heater to cabin	1	
-24	22E4055-1	. . . DUCT, Heater to cabin (3209105 (ARW) or CT-0676 (USR))	1	
		Attaching Parts		
	AN3C5A	. . . BOLT	1	
	AN3-6A	. . . BOLT	5	
	AN364-1032	. . . NUT	1	
	AN960D10	. . . WASHER	6	
	AN960D10L	. . . WASHER	1	
		———*———		
-25	18545	. . . CLAMP ASSEMBLY (MAR)	1	
	or			
	16531	. . . CLAMP ASSEMBLY (MAR)	1	
	or			
	22E4058-1	. . . CLAMP ASSEMBLY	1	
	or			
	22E4058-2	. . . CLAMP ASSEMBLY	1	
-26	B55A00	. . IGNITION ASSEMBLY (SUC)	1	
	or			
	A55A00	. . IGNITION ASSEMBLY (SUC)	1	
-27	J60A43	. . IGNITION LEAD (SUC)	1	
-28	22E4021-19	. . STRIP, Back-up	1	
	22E4061-2	. . GASKET	1	
	22E4003-1	. DUCTING, Cabin	1	

Figure and Index Number	Part Number	Description 1 2 3 4 5 6 7	Units per Assembly	Usable On Code
85-29	22E4003-73	. . DUCT ASSEMBLY, Fwd glass fabric	1	J,DB
	22E4003-108	. . DUCT ASSEMBLY, Fwd glass fabric	1	DC
	or			
	22E4003-102	. . DUCT ASSEMBLY, Fwd glass fabric	1	DC
-30	22E4003-59	. . . VALVE ASSEMBLY, Fwd transmission	1	G
	22E4182-5	. . . VALVE ASSEMBLY, Enclosure	1	X,AU
	22E4003-9	. . . . SHAFT ASSEMBLY	1	
	22E4074-1	. . . . SPRING	2	G
	22E4003-45	. . . . PLATE, Valve	2	X,AU
	22E4182-35	. . . . PLATE, Valve		
		Attaching Parts		
	AN520DD10-10	. . . . SCREW	2	G
	AN520DD10-12	. . . . SCREW	2	X,AU
	AN364D1032	. . . . NUT	2	
		*———		
	W7000-1D-4	. . . . LEVER (WTR)	1	
-31	80215-5	. . . ANEMOSTAT (ANE)	1	
	or			
	22E4003-101	. . . DIFFUSER (Made from 80215-4 (ANE))	1	
	NAS51-215	. . . RING, Snap	1	DC
	22E4003-94	. . . GASKET, Anemostat	1	
-32	22E4003-74	. . DUCT ASSEMBLY, Center glass fabric	1	J,DB
	22E4003-109	. . DUCT ASSEMBLY, Center glass fabric	1	DC
	or			
	22E4003-103	. . DUCT ASSEMBLY, Center glass fabric	1	DC
-33	22E4003-5	. . . VALVE ASSEMBLY, Shaft bearing	1	G
	22E4182-23	. . . SLEEVE, Nozzle	2	X,AU
	22E4003-51	. . . WASHER	2	
	AN3219-1	. . . KNOB	2	
	80215-5	. . . ANEMOSTAT (ANE)	2	
	or			
	22E4003-101	. . . DIFFUSER (Made from 80215-4 (ANE))	2	
	22E4003-94	. . . GASKET, Anemostat	2	DC
	NAS51-215	. . . RING, Snap	1	J,DB
-34	22E4003-75	. . DUCT ASSEMBLY, Aft glass fabric	1	DC
	22E4003-110	. . DUCT ASSEMBLY, Aft glass fabric	1	DC
	or			
	22E4003-104	. . DUCT ASSEMBLY, Aft glass fabric	1	
	80215-5	. . . ANEMOSTAT (ANE)	1	
	or			
	22E4003-101	. . . DIFFUSER (Made from 80215-4 (ANE))	1	
	22E4003-94	. . . GASKET, Anemostat	1	DC
	NAS51-215	. . . RING, Snap	1	
-35	L-5M-1	. . . VALVE, Iris (LUN)	1	
	or			
	IV-40-570	. . . VALVE, Iris (INDL)	1	
-36	L-5M-2	. . . VALVE, Iris (LUN)	1	
	or			
	IV-40-571	. . . VALVE, Iris (INDL)	1	
	22E4003-93	. . . GASKET, Iris valve	2	J,DB
	22S4057-1	. . SEAL INSTALLATION, Aft heater duct	1	J
	22S4057-13	. . SEAL INSTALLATION, Aft heater duct	1	EM
	42S4060-1	. . SEAL INSTALLATION, Aft heater duct	1	EI,EH
	22S4057-8	. . . SEAL, Shaft rubber	1	
	22S4057-7	. . . SEAL, Valve rubber	2	J,EM
	42S4060-5	. . . SEAL, Valve rubber	2	EI,EH
	22E4008-1	. DUCTING, Cockpit	1	S
	22E4008-66	. DUCTING, Cockpit	1	AT
	22E4193-1	. DUCTING, Cockpit	1	X,AU
-37	22E4008-46	. . COUPLING	1	G
-38	22E4008-8	. . DUCT ASSEMBLY	1	G

Figure and Index Number	Part Number	1 2 3 4 5 6 7 Description	Units per Assembly	Usable On Code
85-39	22E4008-7	. . DUCT ASSEMBLY	1	G
-40	22E4008-6	. . DUCT ASSEMBLY	1	G
-41	22E4008-5	. . DUCT ASSEMBLY	1	S
	22E4008-67	. . DUCT ASSEMBLY	1	AT
-42	80967	. . . ANEMOSTAT (ANE)	1	G
-43	22E4008-45	. . COUPLING	1	G
	AN742D42	. . CLAMP	1	G
-44	22E4008-2	. . DUCT ASSEMBLY	1	S
	22E4008-70	. . DUCT ASSEMBLY	1	AT
-45	22E4008-3	. . DUCT ASSEMBLY, LH	1	G
-46	22E4008-4	. . DUCT ASSEMBLY, RH	1	G
-47	22E4008-35	. . NOZZLE, LH	1	G
-48	22E4008-36	. . NOZZLE, RH	1	G
	V-013	. . BLANKET, Insulation (TMH)	AR	G
-49	E24-G14-4180-A1	. . DUCTING ASSEMBLY (Proctor Electric Co, Phila, Pa)	1	X,AU
	22E4022-1	. DUCTING INSTALLATION, Fwd transmission	1	A
-50	22E4022-2	. . DUCTING ASSEMBLY, Fwd transmission	1	

Equipment

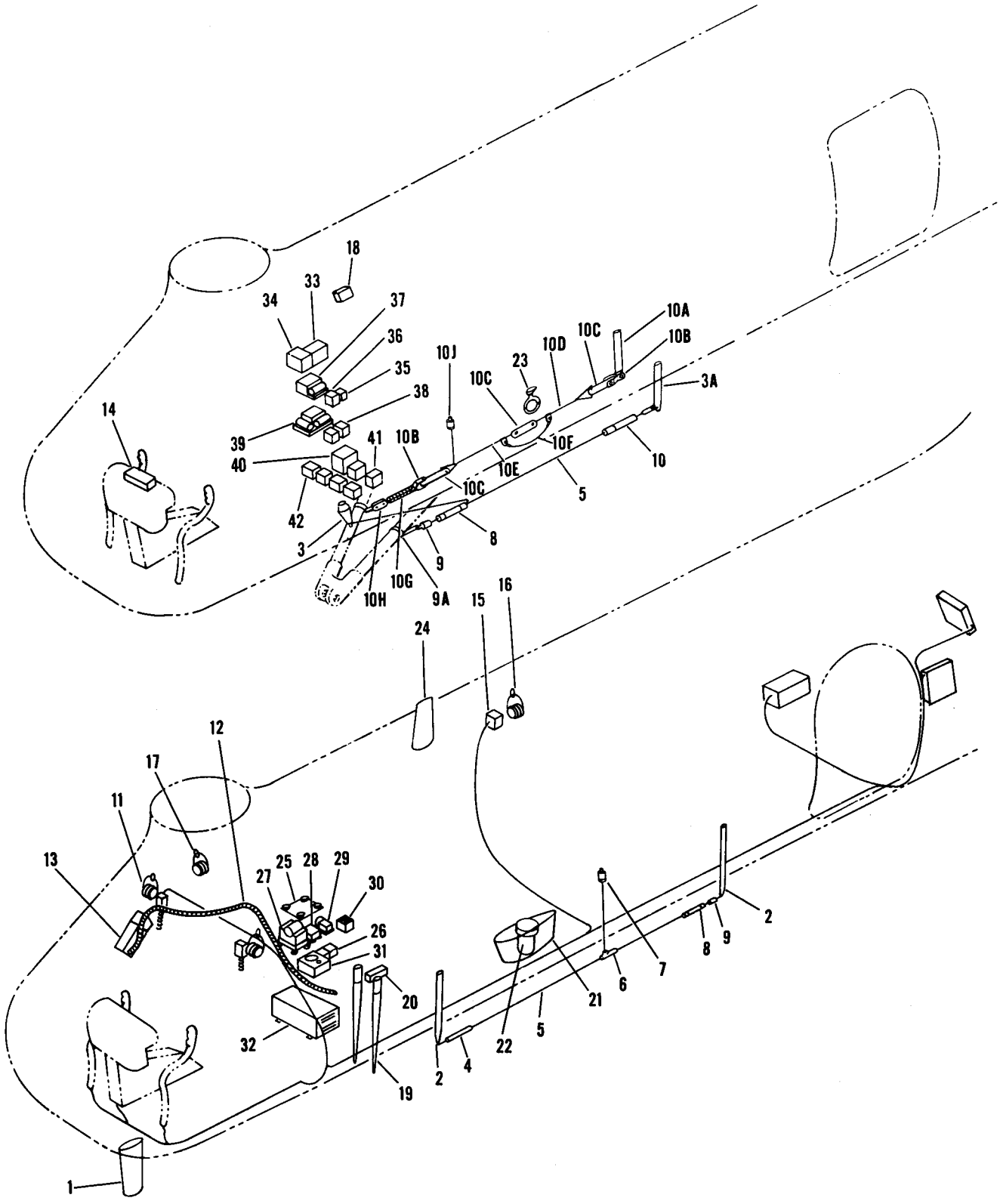

Figure 86. Radio and Interphone (Sheet 1 of 2)

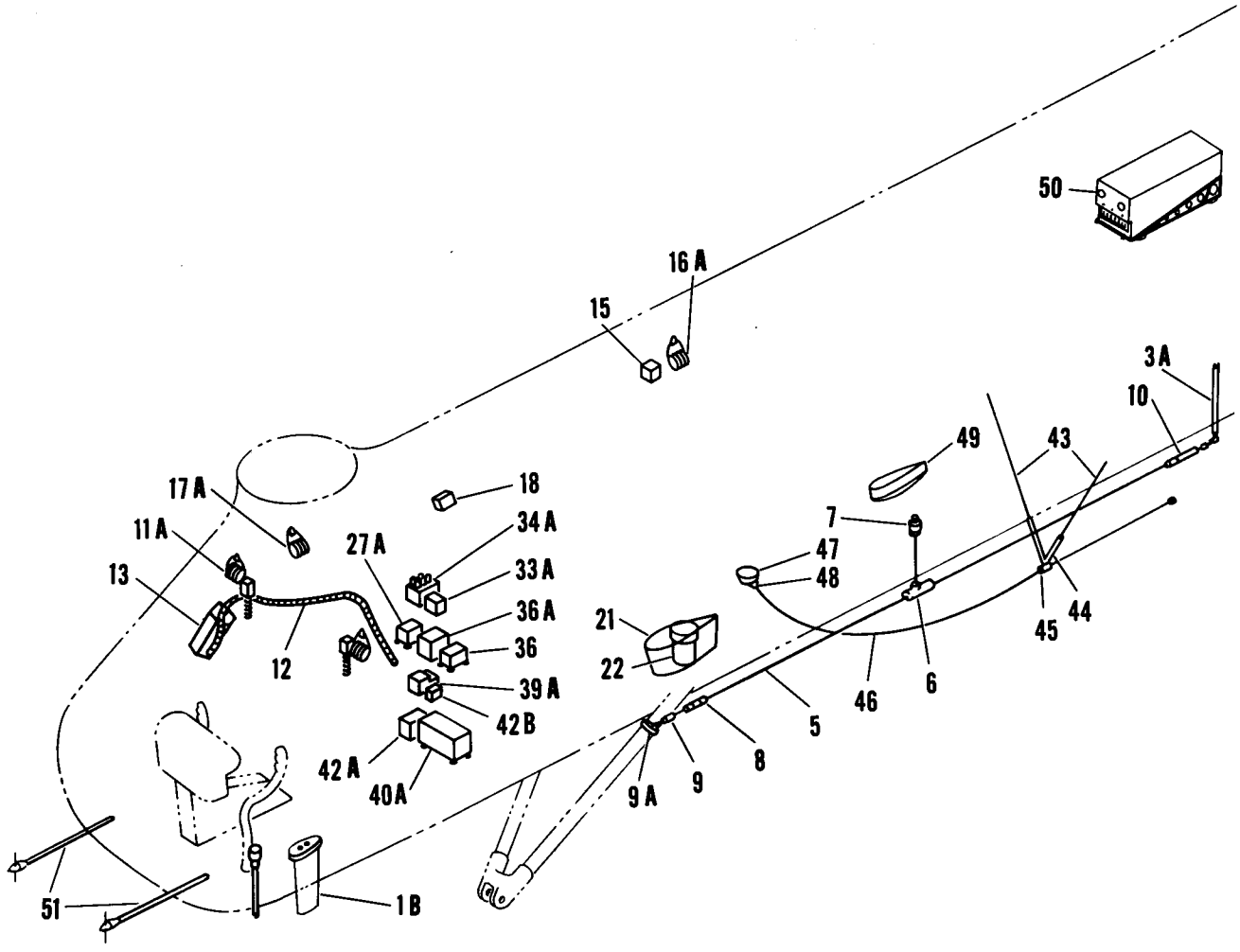

Figure 86. Radio and Interphone (Sheet 2 of 2)

Figure and Index Number	Part Number	Description 1 2 3 4 5 6 7	Units per Assembly	Usable On Code
86-	22E3001-1	RADIO AND INTERPHONE SYSTEM INSTALLATION	1	J
	43E3001-1	RADIO AND INTERPHONE SYSTEM INSTALLATION	1	C
	42E3001-1	RADIO AND INTERPHONE SYSTEM INSTALLATION	1	D
	22E3010-1	. ANTENNA INSTALLATION, AN/ARC-3	1	J
	43E3006-1	. ANTENNA INSTALLATION, ARC Type 12	1	C
	43E3066-1	. ANTENNA INSTALLATION, ARC-55	1	HI
	43E3006-2	. BUTTON, Plug	1	D,HI
	43E3066-3	. PLATE INSTALLATION, ARC-55 cover	1	JA
-1	AT-145B/A	. . ANTENNA (BIEL)	1	J
-1A	ARC TYPE A-12	. . ANTENNA (ARC)	1	IS
-1B	AT-256/ARC	. . ANTENNA (GFAE)	1	HI
		Attaching Parts		
	AN6DD14A	. . BOLT	4	J
	AN520DD10-8	. . SCREW	12	J
	AN364D624	. . NUT	4	J
	AN960D616L	. . WASHER	8	J
		———*———		
	22E3007-1	. ANTENNA INSTALLATION, AN/ARN-6 sens	1	J
	43E3007-1	. ANTENNA INSTALLATION, AN/ARN-6 sens	1	EH
	A6913-1024-24A	. PLATE, Patch (TIN)	1	EG
	48152K2215	. BUTTON, Plug (UC)	1	EH
	42E3071-1	. ANTENNA INSTALLATION, Ground liaison (R-11A)	1	FJ
-2	22E3007-5	. . MAST	2	J
		Attaching Parts		
	AN3DD4A	. . BOLT	2	J
	AN3DD6A	. . BOLT	1	J
	AN365D1032	. . NUT	3	J
	AN960D10	. . WASHER	5	J
	NAS43DD3-16	. . SPACER	1	J
		———*———		
-3	IS-1074	. . INSULATOR (AA)	1	ED
-3A	42S4693-1	. . MAST	1	AU
-4	IL-5/U	. . INSULATOR	1	J
		Attaching Parts		
	AN115-16	. . SHACKLE	1	J
	AN23-10A	. . BOLT	1	J
	AN365-1032	. . NUT	1	J
	AN960-10L	. . WASHER	2	J
		———*———		
-5	WS-5C/U	. . WIRE, Antenna	1	
-6	MX-276/AR	. . SHIELD, Corona	1	J,EH
-7	CU-65/ARN-6	. . COUPLING UNIT (GFAE)	1	J,EH
		Attaching Parts		
	AN515-6-14	. . SCREW	4	J
	AN515-6R14	. . SCREW	4	EH
	AN520-10R10	. . SCREW	1	EH
	AN365-632	. . NUT	4	J
	AN960D6L	. . WASHER	8	J
		———*———		
-8	MX-273/AR	. . INSULATOR, Strain	1	
-9	MX-311/AR	. . FITTING, Guy	1	
		Attaching Parts		
	AN115-16	. . SHACKLE	1	
	AN23-10A	. . BOLT	1	J
	AN520DD10-8	. . SCREW	1	FJ
-9A	AN735-40	. . CLAMP (Used on tapered tube v-brace)	1	
	AN735-36	. . CLAMP (Used on straight tube v-brace)	1	
	AN960-6L	. . WASHER	4	EH
	AN365-1032	. . NUT	1	
	AN960-10L	. . WASHER	2	
		———*———		
-10	IL-5/U	. . INSULATOR	1	AU
		Attaching Parts		
	AN115-16	. . SHACKLE	1	AU
	AN23-8	. . BOLT	1	AU

Figure and Index Number	Part Number	1 2 3 4 5 6 7 Description	Units per Assembly	Usable On Code
86-	AN365-1032	. . NUT	1	AU
		———*———		
	42E3070-5	. ANTENNA INSTALLATION, Ground liaison	1	CW
	42E3070-11	. ANTENNA INSTALLATION, Ground liaison	1	BY
-10A	42S4680-4	. . MAST	1	D
	42E3070-7	. . PLATE, Patch	1	C
		Attaching Parts		
	AN23-14	. . BOLT, Clevis	2	AU
	AN365-1032	. . NUT	2	AU
	AN960D10L	. . WASHER	4	AU
		———*———		
	42E3070-2	. . ANTENNA ASSEMBLY	1	D
-10B	42E3049-2	. . . LINK, Insulator	4	D
		Attaching Parts		
	AN392-7	. . . PIN, Clevis	1	D
	AN381-2-7	. . . PIN, Cotter	1	D
	AN960D4	. . . WASHER	2	D
		———*———		
-10C	IN-88	. . . INSULATOR	3	D
		Attaching Parts		
	AN392-21	. . . PIN, Clevis	1	D
	AN381-2-7	. . . PIN, Cotter	1	D
	AN960D4L	. . . WASHER	2	D
		———*———		
-10D	42E3070-10	. . . WIRE, Antenna	1	D
-10E	42E3070-9	. . . WIRE, Antenna	1	D
-10F	42E3070-8	. . . JUMPER	1	D
-10G	NAF1086-4	. . . SPRING ASSEMBLY	1	D
-10H	42E3049-1	. . . LINK, Spring	3	D
-10J	CU-65/ARN-6	. . . COUPLING UNIT	1	D
	A6913-1024	. . . PLATE, Patch (TIN)	1	DV
	A6913-1024-24A	. . . PLATE, Patch (TIN)	1	EH
		Attaching Parts		
	AN515-6-14	. . . SCREW	4	AU
	AN960D6	. . . WASHER	4	AU
		———*———		
	22E3011-3	. INTERPHONE INSTALLATION, Cockpit LH	1	S
	22E3011-4	. INTERPHONE INSTALLATION, Cockpit RH	1	S
	22E3011-1	. INTERPHONE INSTALLATION, Cockpit LH	1	T,E
	22E3011-2	. INTERPHONE INSTALLATION, Cockpit RH	1	T,E
	43E3011-1	. INTERPHONE INSTALLATION, Cockpit LH	1	DV
	43E3011-2	. INTERPHONE INSTALLATION, Cockpit RH	1	DV
	42E3011-1	. INTERPHONE INSTALLATION, Cockpit LH	1	D
	42E3011-2	. INTERPHONE INSTALLATION, Cockpit RH	1	D
	42E3011-8	. INTERPHONE INSTALLATION, Cockpit LH	1	EH
	42E3011-9	. INTERPHONE INSTALLATION, Cockpit RH	1	EH
-11	H-46/UR	. . HEADSET AND MICROPHONE (GFAE)	1	J,DV
	H-78/AIC-10	. . HEADSET AND MICROPHONE (GFAE)	1	D
-11A	H-101/U	. . HEADSET AND MICROPHONE (GFAE)	1	EH
	CX1301/AR	. . CORDAGE (5 ft)	1	S
	WF-5/U	. . CORDAGE	AR	T,E
	43E3011-3	. . CORDAGE (4 ft)	1	DV
	WF-14/U	. . CORDAGE	AR	D,EH
	U-61/U	. . JACK	1	FN,DV
	U-92/U	. . JACK	1	D,EH
	J-193/AR	. . BOX, Junction	1	T,B
	CP29AIDF103M	. . CAPACITOR (CLD)	1	J
	22E3003-1	. CABLING INSTALLATION, Radio and interphone	1	S
	22E3003-5	. CABLING INSTALLATION, Radio and interphone	1	T
	22E3003-7	. CABLING INSTALLATION, Radio and interphone	1	E
	43E3004-1	. CABLING INSTALLATION, Radio and interphone	1	AL
	43E3004-2	. CABLING INSTALLATION, Radio and interphone	1	FM
	42E3004-1	. CABLING INSTALLATION, Radio and interphone	1	D

Figure and Index Number	Part Number	1 2 3 4 5 6 7 Description	Units per Assembly	Usable On Code
86-	43E3232-1	. CABLING INSTALLATION, Radio and interphone	1	EH
	43E3107-1	. CABLING INSTALLATION, Radio and interphone	1	EH
-12	MC-124	. . SHAFT, Tuning (US Army dwg No. SC-D-2035)	1	J
	MC-136	. . COUPLING	1	J
	ARC 6357	. . ADAPTER (ARC)	3	AU
-13	22E2040-1	. PANEL INSTALLATION, Overhead, see fig. 78	Ref	
	42E2040-1	. PANEL INSTALLATION, Overhead, see fig. 78	Ref	
	42E2040-5	. PANEL INSTALLATION, Overhead, see fig. 78A	Ref	
	42E2040-6	. PANEL INSTALLATION, Overhead, see fig. 78B	Ref	
	43E3047-1	. RADIO SET INSTALLATION, AN/PRC-9	1	D
-14	RT-175/PRC-9	. . TRANSMITTER-RECEIVER (GFAE)	1	D
		Attaching Parts		
	AN515-8R8	. . SCREW	2	D
	AN365-832	. . NUT	2	D
	AN960PD8	. . WASHER	4	D
		***		
	22E3012-2	. INTERPHONE INSTALLATION, Litter sta	1	J
	43E3017-1	. INTERPHONE INSTALLATION, Cabin aft	1	AL
	43E3101-1	. INTERPHONE INSTALLATION, Cabin aft	1	FM
	42E3017-1	. INTERPHONE INSTALLATION, Cabin aft	1	D
	42E3017-3	. INTERPHONE INSTALLATION, Cabin aft	1	EH
-15	22E3050-1	. . BOX ASSEMBLY, Interphone junction	1	Q
	22E3050-6	. . BOX ASSEMBLY, Interphone junction	1	R
	CP29AIDF103M	. . . CAPACITOR (CLD)	1	J
	42E3218-1	. . BOX ASSEMBLY, Interphone junction	1	AU
	C-823/AIC-10	. . CONTROL, Interphone (GFAE)	1	D
-16	H-46/UR	. . HEADSET AND MICROPHONE (GFAE)	1	J,DV
	H-78/AIC-10	. . HEADSET AND MICROPHONE (GFAE)	1	D
-16A	H-101/U	. . HEADSET AND MICROPHONE (GFAE)	1	EH
	U-82/U	. . JACK	1	J,DV
	U-94/U	. . JACK	1	D,EH
	WF-5/U	. . CORDAGE	AR	J
	43E3017-2	. . CORDAGE	1	DV
	43E3101-4	. . CORDAGE	1	DV
	42E3017-2	. . CORDAGE	1	D,EH
	22E3012-3	. INTERPHONE INSTALLATION, Hoist sta	1	J
	43E3012-1	. INTERPHONE INSTALLATION, Cabin fwd	1	DV
	42E3012-1	. INTERPHONE INSTALLATION, Cabin fwd	1	D
	43E3025-1	. INTERPHONE INSTALLATION, Cabin fwd	1	EH
-17	H-46/UR	. . HEADSET AND MICROPHONE (GFAE)	1	J,DV
	H-78/AIC-10	. . HEADSET AND MICROPHONE (GFAE)	1	D
-17A	H-101/U	. . HEADSET AND MICROPHONE (GFAE)	1	EH
	U-82/U	. . JACK	1	J
	U-61/U	. . JACK	1	DV
	U-94/U	. . JACK	1	D,EH
	WF-5/U	. . CORDAGE	AR	J
	A6056	. . CORDAGE (TEL)	1	DV
	42E3012-3	. . CORDAGE	1	D
	43E3100-1	. PANEL INSTALLATION, Interphone control	1	C
	42E3012-2	. CONTROL INSTALLATION, Interphone	1	D
-18	C-695/AIC	. . PANEL, Interphone control (GFAE)	1	C
	C-823/AIC-10	. . CONTROL, Interphone (GFAE)	1	D
	SB-329/AR	. . CONTROL, Interphone (GFAE)	1	EH
	22E3015-1	. ANTENNA AND MODULATOR INSTALLATION, AN/ARA-8A	1	J
-19	AS-148/ARA-8	. . ANTENNA ASSEMBLY (GFAE)	2	J
		Attaching Parts		
	AN3-5A	. . BOLT	4	J
	AN526C632-8	. . SCREW	8	J
	AN526C832R9	. . SCREW	6	J
	AN365-1032	. . NUT	4	J
	AN365-632	. . NUT	8	J

Figure and Index Number	Part Number	1 2 3 4 5 6 7 Description	Units per Assembly	Usable On Code
86-	AN365-832	. . NUT	6	J
	AN960D10	. . WASHER	4	J
	AN960D10L	. . WASHER	8	J
	AN960D6L	. . WASHER	16	J
	AN960D8L	. . WASHER	12	J
	22E3006-4	. . STRAP	2	J
		———*———		
-20	MD34/ARA-8	. . MODULATOR (GFAE)	1	J
	MT-282/ARA-8	. . BRACKET, Mounting (GFAE)	1	J
	22E3008-1	. ANTENNA INSTALLATION, AN/ARN-6 loop	1	J
	22E3008-3	. ANTENNA INSTALLATION, AN/ARN-6 loop	1	EH
	22E3008-5	. . PLATE, Close-off	1	EG
	42E3063-1	. ANTENNA INSTALLATION, L-10 loop	1	FJ
	42E3063-2	. COVER INSTALLATION, L-10 loop	1	EG
	50834K2215	. . BUTTON, Plug (UC)	1	EH
	22E3008-2	. . PLATE, Close-off	1	J
-21	CW-141/ARN	. . COVER, Antenna (GFAE)	1	J,EH
		Attaching Parts		
	AN520DD10-10	. . SCREW	4	J,EH
	AN365D1032	. . NUT	4	J,EH
	AN960D10L	. . WASHER	4	J,EH
		———*———		
-22	AS-313A/ARN-6	. . LOOP ASSEMBLY (GFAE)	1	J,EH
-23	12706	. . LOOP ASSEMBLY (ARC) (GFAE)	1	FJ
		Attaching Parts		
	AN520DD10-12	. . SCREW	10	
	AN960D10L	. . WASHER	10	
		———*———		
	22E3005-1	. ANTENNA INSTALLATION, AN/ARC-27	1	J,D
	42E3065-1	. PLATE INSTALLATION, Cover	1	C
-24	AT-256/ARC	. . ANTENNA (GFAE)	1	J,D
	43E3065-2	. . PLATE	1	C
		Attaching Parts		
	AN510DD10-10	. . SCREW	8	J,D
	AN515DD10-10	. . SCREW	4	C
	AN365D1032	. . NUT	2	
	AN960D10L	. . WASHER	2	
		———*———		
	42E3009-2	. PLATE INSTALLATION, Cover	1	
	42E3009-3	. . PLATE, Cover	1	
		Attaching Parts		
	AN520DD10-8	. . SCREW	6	
	AN365D1032	. . NUT	6	
	AN960D10L	. . WASHER	6	
		———*———		
	22E3014-23	. EQUIPMENT INSTALLATION, Radio sta 97.500 to sta 119.500	1	S
	22E3014-13	. EQUIPMENT INSTALLATION, Radio sta 97.500 to sta 119.500	1	T,AX
	22E3014-24	. EQUIPMENT INSTALLATION, Radio sta 97.500 to sta 119.500	1	AY
	43E3014-1	. EQUIPMENT INSTALLATION, Radio sta 97.500 to sta 119.500	1	AL
	43E3014-3	. EQUIPMENT INSTALLATION, Radio sta 97.500 to sta 119.500	1	FJ
	42E3014-1	. EQUIPMENT INSTALLATION, Radio sta 97.500 to sta 119.500	1	D
	43E3027-1	. EQUIPMENT INSTALLATION, Radio sta 97.360 to sta 119.500	1	HQ
	43E3027-3	. EQUIPMENT INSTALLATION, Radio sta 97.360 to sta 119.500	1	IO
■	43E3027-4	. EQUIPMENT INSTALLATION, Radio sta 97.360 to sta 119.500	1	IP
-25	MT-274A/ARN-6	. . MOUNT (Stowed position) (GFAE)	1	J
		Attaching Parts		
	AN520C10-10	. . SCREW	16	J
	AN364-1032	. . NUT	16	J
	AN960D10L	. . WASHER	32	J
		———*———		
-26	AN3311-1	. . RELAY	5	J
-27	AM-300/AIC	. . AMPLIFIER, AF (GFAE)	1	J,FM
-27A	R-122/ARN-12	. . RECEIVER (GFAE)	1	EH
	MT-589/ARN-12	. . MOUNT (GFAE)	1	EH

Figure and Index Number	Part Number	1 2 3 4 5 6 7 Description	Units per Assembly	Usable On Code
86-	MT-677/AIC	. . MOUNT (GFAE)	1	J
		Attaching Parts		
	AN515-6-8	. . SCREW	16	J
	AN515-8R7	. . SCREW	8	EH
	AN365-632	. . NUT	16	J
	AN364-832	. . NUT	8	EH
	AN960D6L	. . WASHER	32	J
	AN960D8L	. . WASHER	16	EH
		———*———		
-28	C-301/ARA-8A	. . CONTROL, Automatic volume (GFAE)	1	J
	MT-473/U	. . MOUNT (GFAE)	1	J
		Attaching Parts		
	AN515DD8-8	. . SCREW	8	J
	AN365D832	. . NUT	8	J
	AN960D8L	. . WASHER	16	J
		———*———		
-29	TF-127/U	. . TRANSFORMER, Power (GFAE)	1	J
		Attaching Parts		
	AN520C10-8	. . SCREW	3	J
	AN364-1032	. . NUT	3	J
	AN960D10L	. . WASHER	6	J
		———*———		
-30	RE-13/ARA-8	. . RELAY, Antenna (GFAE)	1	J
	MT-288/ARA-8	. . MOUNT (GFAE)	1	J
		Attaching Parts		
	AN515DD8-8	. . SCREW	4	J
	AN365D832	. . NUT	4	J
	AN960D8L	. . WASHER	8	J
		———*———		
-31	C-626/ARC-27	. . CONTROL, Radio set (GFAE)	1	J
	MT-821/ARC-27	. . MOUNT (GFAE)	1	J
		Attaching Parts		
	AN520C10-8	. . SCREW	6	J
	AN364-1032	. . NUT	6	J
	AN960D10L	. . WASHER	12	J
		———*———		
	T-67/ARC-3	. . TRANSMITTER (GFAE)	1	J
	MT-238B/ARC-3	. . MOUNT (GFAE)	1	J
	R-101A/ARN-6	. . COMPASS UNIT, Radio (alternate equipment)	1	J
-32	R-77A/ARC-3	. . RECEIVER (GFAE)	1	J
	MT-237B/ARC-3	. . MOUNT (GFAE)	1	J
		Attaching Parts		
	AN520C10-8	. . SCREW	8	J
	AN960D10L	. . WASHER	8	J
		———*———		
	J-68/ARC-3	. . BOX, Power junction (GFAE)	1	J
	MT-236A/ARC-3	. . MOUNT (GFAE)	1	J
		Attaching Parts		
	AN520C10-10	. . SCREW	8	J
	AN960D10L	. . WASHER	8	J
		———*———		
	RT-178/ARC-27	. . TRANSMITTER-RECEIVER (Alternate equipment) (GFAE)	1	J
	MT-822/ARC-27	. . MOUNT (Alternate equipment) (GFAE)	1	J
-33	T-11B	. . TRANSMITTER, VHF command set (ARC) (GFAE)	1	DV
-33A	15840	. . TRANSMITTER, VHF command set (ARC) (GFAE)	1	HQ
	C-626/ARC-27	. . CONTROL, UHF radio set (GFAE)	1	D
	XTL-40A	. . CAPACITOR (MAL)	1	D
	or			
	BULLETIN 350A	. . CAPACITOR, Type 100D (SPR)	1	D
	12501	. . MOUNT, ARC type M-11A (ARC) (GFAE)	1	IS
	MT-821/ARC-27	. . MOUNT (GFAE)	1	D

Figure and Index Number	Part Number	1 2 3 4 5 6 7 Description	Units per Assembly	Usable On Code
86-		*Attaching Parts*		
	AN515-8R22	. . SCREW	4	IS
	AN515-8R14	. . SCREW	6	D
	AN364-832	. . NUT	4	IS
	AN364-832	. . NUT	6	D
	AN960D8L	. . WASHER	8	IS
	AN960D8L	. . WASHER	12	D
		———*———		
	14958-121-5MC	. . CRYSTAL UNIT (ARC) (GFAE)	1	IS
	14958-121-7MC	. . CRYSTAL UNIT (ARC) (GFAE)	1	IS
	14958-121-9MC	. . CRYSTAL UNIT (ARC) (GFAE)	1	IS
	14858-122-1MC	. . CRYSTAL UNIT (ARC) (GFAE)	1	IS
	14958-122-5MC	. . CRYSTAL UNIT (ARC) (GFAE)	1	IS
-34	43E3093-1	. . BOX INSTALLATION, Radio control	1	AL
	43E3093-2	. . BOX INSTALLATION, Radio control	1	FM
-34A	43E3233-1	. . BOX INSTALLATION, Radio control	1	EH
		Attaching Parts		
	AN515DD10-14	. . SCREW	4	C
	AN365D1032	. . NUT	4	C
	AN960D10	. . WASHER	4	C
		———*———		
-35	15002	. . RECEIVER, AN/ARC R-19 VHF command set (ARC) (GFAE)	1	DV
	RE94(XA)/AIC-10	. . RELAY ASSEMBLY, Interphone (GFAE)	1	D
	12502	. . MOUNT, Type M-12A (ARC) (GFAE)	1	DV
		Attaching Parts		
	AN515-8R16	. . SCREW	4	DV
	AN515-8R6	. . SCREW	4	D
	AN364-832	. . NUT	4	D,DV
	AN960D8L	. . WASHER	8	D,DV
		———*———		
	14589	. . CAP, Receptacle (ARC) (GFAE)	1	IS
	14402	. . DYNAMOTOR, Type D-10A (ARC) (GFAE)	1	HJ
-36	T-13A	. . TRANSMITTER, VHF command set (ARC) (GFAE)	1	IS
-36A	RT-294/ARC-44	. . TRANSMITTER-RECEIVER (GFAE)	1	EH
	MT-1268/AR	. . MOUNT (GFAE)	1	EH
	DY-77(XA)/A13-10	. . DYNAMOTOR, Interphone (GFAE)	1	D
	12501	. . MOUNT, Type M-11A (ARC) (GFAE)	1	IS
	MT-1060/U	. . MOUNT (RCA) (GFAE)	1	DI,DZ
	MT-1060/U	. . MOUNT (RCA)	1	DU
		Attaching Parts		
	AN515-8R16	. . SCREW	4	DV
	AN515-8R6	. . SCREW	4	D
	AN515-6R7	. . SCREW	8	EH
	AN364-832	. . NUT	4	ED
	AN364-632	. . NUT	8	EH
	AN960D8L	. . WASHER	8	ED
	AN960D6L	. . WASHER	16	EH
		———*———		
	14958-126-18MC	. . CRYSTAL UNIT (ARC) (GFAE)	1	IS
	14958-126-3MC	. . CRYSTAL UNIT (ARC) (GFAE)	1	IS
	14958-126-7MC	. . CRYSTAL UNIT (ARC) (GFAE)	1	DV
-37	AM-300/AIC	. . AMPLIFIER, AF (GFAE)	1	J,FM
		Attaching Parts		
	AN515-6R8	. . SCREW	16	J,FM
	AN364-632	. . NUT	16	J,FM
	AN960D6L	. . WASHER	16	J,FM
		———*———		
-38	ARC-15C	. . OMNIRANGE SET, VHF receiver (ARC) (GFAE)	1	DV
	RT-178/ARC-27	. . RECEIVER-TRANSMITTER (GFAE)	1	D
	15640	. . MOUNT, Type M-22 (ARC) (GFAE)	1	DV
	MT-822/ARC-27	. . MOUNT (GFAE)	1	D

Figure and Index Number	Part Number	1 2 3 4 5 6 7 Description	Units per Assembly	Usable On Code
86-		*Attaching Parts*		
	AN515-8R6	. . SCREW	8	DV
	AN520DD10R8	. . SCREW	16	D
	AN364-632	. . NUT	8	DV
	AN960D8L	. . WASHER	8	DV
		————*————		
-39	12404	. . RECEIVER, Type R-11A (ARC) (GFAE)	1	ED
-39A	15002	. . RECEIVER, VHF command set (ARC) (GFAE)	1	HQ
	12502	. . MOUNT, Type M-12A (ARC) (GFAE)	1	AU
		Attaching Parts		
	AN515-8R16	. . SCREW	4	IQ
	AN515-8R7	. . SCREW	4	D
	AN364-832	. . NUT	4	HJ
	AN960D8L	. . WASHER	8	HJ
		————*————		
	12504	. . DYNAMOTOR, Type D-10 (ARC) (GFAE)	1	DV
-40	AM-142/AIC	. . AMPLIFIER, Mixer (GFAE)	4	FM
-40A	R101A/ARN-6	. . COMPASS, Radio (GFAE)	1	EH
	MT-274A/ARN-6	. . MOUNT (GFAE)	1	EH
		Attaching Parts		
	AN515-8R8	. . SCREW	16	FM
	AN520C10R10	. . SCREW	16	EH
	AN960D10L	. . WASHER	16	EH
		————*————		
-41	F-21/ARA-9	. . FILTER (GFAE)	2	FM
		Attaching Parts		
	AN515-8R8	. . SCREW	8	FM
		————*————		
-42	15519	. . AMPLIFIER, Type F-10A (ARC) (GFAE)	1	DV
	15600	. . MOUNT, Type M-21 (ARC) (GFAE)	1	DV
		Attaching Parts		
	AN515-8R14	. . SCREW	4	DV
		————*————		
-42A	DY-107/AR	. . DYNAMOTOR (GFAE)	1	EH
	MT-1267/AR	. . MOUNT (GFAE)	1	EH
		Attaching Parts		
	AN520DD10R8	. . SCREW	4	EH
	AN960D10L	. . WASHER	4	EH
		————*————		
-42B	KY-149/AR	. . KEYER, AN/ARA-31	1	IP
	MT-1620/AR	. . MOUNT, AN/ARA-31 keyer	1	IP
		Attaching Parts		
	AN515-6R7	. . SCREW	12	IP
	AN364-632	. . NUT	12	IP
	AN960D6L	. . WASHER	24	IP
		————*————		
	51286	. BUTTON, Plug (UC)	1	EG
	43E3023-3	. ANTENNA INSTALLATION, AN/ARC-44	1	EH
-43	43E3032-1	. . CABLE ASSEMBLY	2	EH
		Attaching Parts		
	AN42B4A	. . BOLT, Eye	2	EH
	AN365-1032	. . NUT	2	EH
	AN960D10	. . WASHER (Used under head)	2	EH
	AN960D10L	. . WASHER (Used under nut)	2	EH
	AN393-9	. . PIN, Flat head	2	EH
	AN393-17	. . PIN, Flat head	2	EH
	AN381-2-10	. . PIN, Cotter	4	EH
		————*————		
-44	43E3035-1	. . INSULATOR	2	EH
		Attaching Parts		
	AN393-17	. . PIN, Flat head	2	EH
	AN381-2-10	. . PIN, Cotter	2	EH
		————*————		

Figure and Index Number	Part Number	1 2 3 4 5 6 7 Description	Units per Assembly	Usable On Code
86-	43E3034-1	. . CLIP	2	EH
		Attaching Parts		
	AN520-10R12	. . SCREW	1	EH
	AN365-1032C	. . NUT	1	EH
	AN960-10	. . WASHER	2	EH
		———*———		
-45	735SS-4-2-8	. . CLAMP (HPP)	1	EH
	3	. . PLUG (PROX)	1	EH
-46	AT-455/ARC	. . ANTENNA (GFAE)	1	EH
-47	AB-340/ARC	. . BASE, Antenna (GFAE)	1	EH
		Attaching Parts		
	AN510-10R16	. . SCREW	6	EH
	AN365-1032	. . NUT	6	EH
	AN960D10	. . WASHER	6	EH
		———*———		
-48	43E3234-1	. . FITTING, Support	1	EH
		Attaching Parts		
	AN520-10R14	. . SCREW	2	EH
	AN520-10R18	. . SCREW	2	EH
	AN960D10L	. . WASHER (Used under head)	4	EH
		———*———		
	UG-201/U	. . ADAPTER (AMP)	1	EH
	CU-361/ARC	. . COUPLER (GFAE)	1	EH
		Attaching Parts		
	AN520-10R10	. . SCREW	4	EH
	AN365-632	. . NUT	4	EH
	AN960D6L	. . WASHER (Used under nut)	4	EH
		———*———		
	43E3024-1	. ANTENNA INSTALLATION, Marker beacon (AN/ARN-12)	1	EH
-49	AT-640/ARN	. . ANTENNA, Marker beacon (37X-1) (CR)	1	HQ
	AT-640/ARN	. . ANTENNA, Marker beacon (GFAE)	1	HI
		Attaching Parts		
	AN520-10R6	. . SCREW	8	EH
	AN935-10L	. . WASHER, Lock spring	8	EH
	AN960D10L	. . WASHER	8	EH
		———*———		
	51045K2215	. BUTTON, Plug (UC)	1	EG
-50	43E3013-1	. RADIO INSTALLATION, ARC-55	1	HI
	RT-349/ARC-55	. . RECEIVER-TRANSMITTER, ARC-55	1	HI
	MT-1536/ARC-55	. . MOUNT, ARC-55	1	HI
-51	43E3222-1	. ANTENNA INSTALLATION, AN/ARA-31	1	IP
	43E3222-3	. . ANTENNA ASSEMBLY, AN/ARA-31 LH	1	IP
	43E3222-4	. . ANTENNA ASSEMBLY, AN/ARA-31 RH	1	IP
	AT-624/AR	. . . ELEMENT (GFAE)	2	IP
	CU-459/AR	. . . IMPEDANCE NETWORK (GFAE)	1	IP

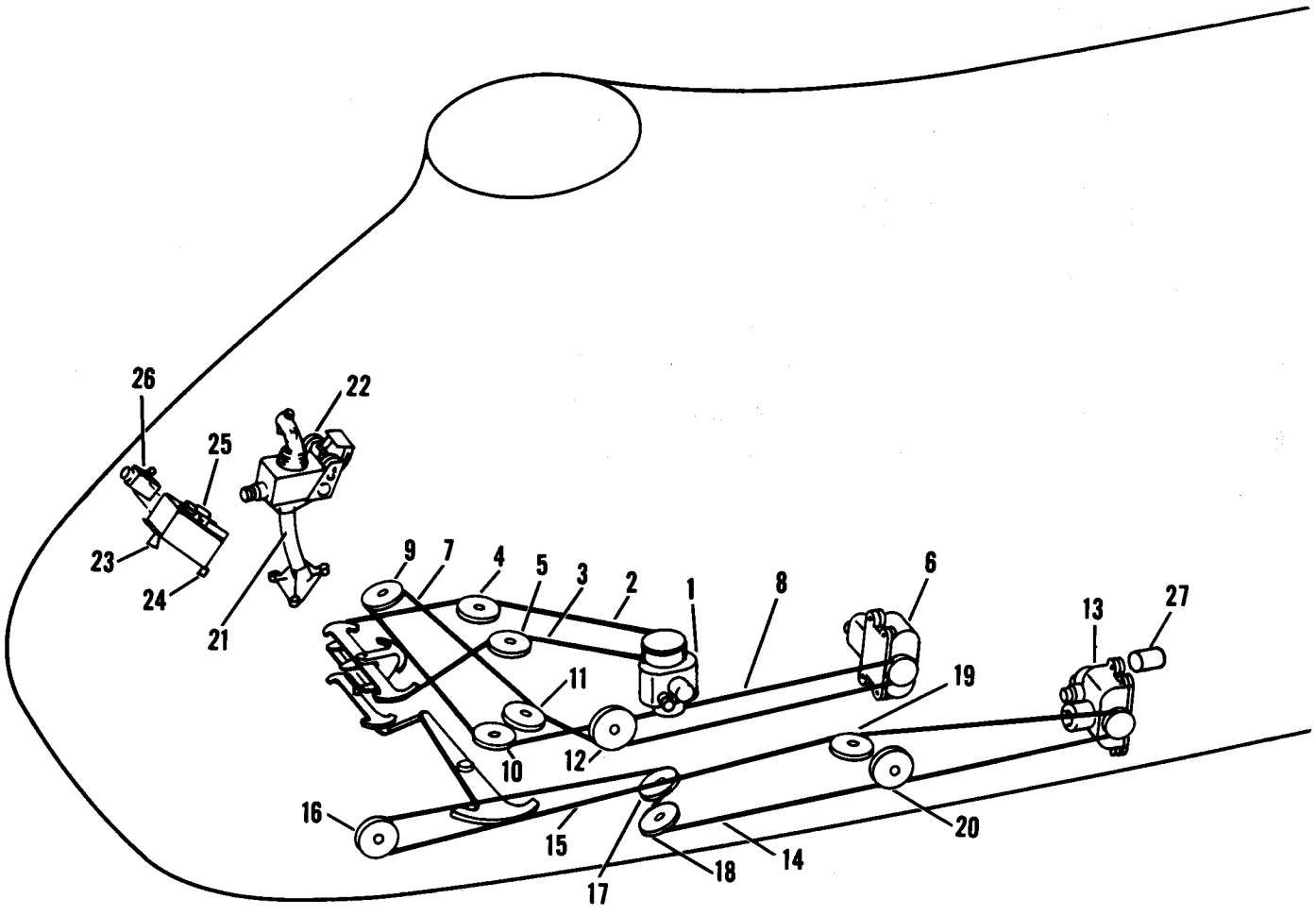

Figure 86A. Automatic Pilot (Sheet 1 of 2)

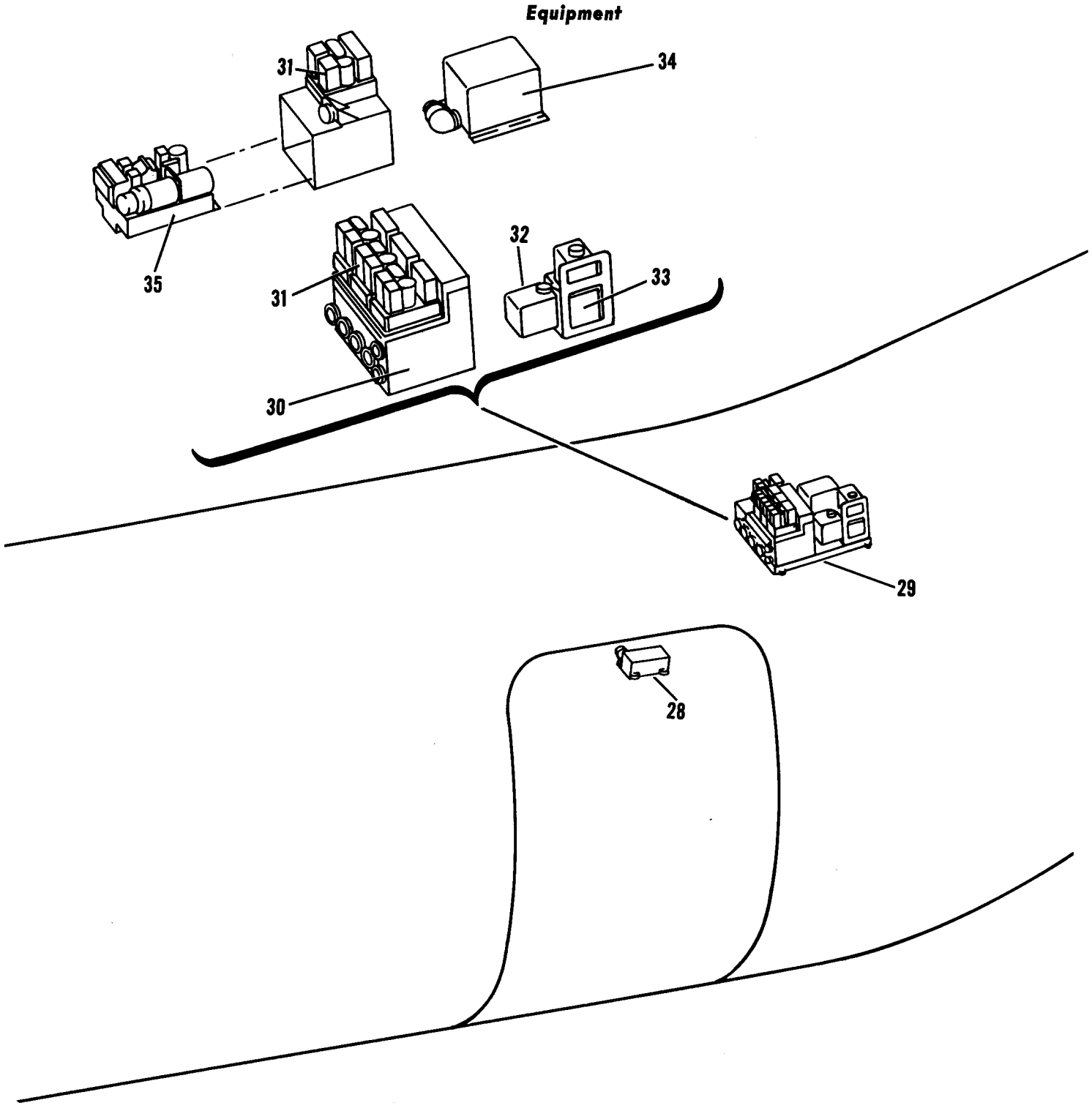

Figure 86A. Automatic Pilot (Sheet 2 of 2)

Figure and Index Number	Part Number	Description 1 2 3 4 5 6 7	Units per Assembly	Usable On Code
86A-	42E1094-1	AUTOMATIC PILOT INSTALLATION, E-12	1	AP,D
	42E1140-1	. CONTROLS, Automatic Pilot	1	AP,D
	42E1141-1	. . SERVO UNIT INSTALLATION, Lateral	1	AP,D
-1	MG7001A21	. . . DRIVE ASSEMBLY, Lateral servo (MH) (GFAE)	1	AP,D
		Attaching Parts		
	AN4-12A	. . . BOLT	4	AP,D
	AN365-428	. . . NUT	4	AP,D
	AN960D416L	. . . WASHER	4	AP,D
	AN960D416	. . . WASHER	4	AP,D
		———*———		
-2	42E1152-1	. . CABLE ASSEMBLY	1	AP,D
-3	42E1152-4	. . CABLE ASSEMBLY	1	AP,D
		Attaching Parts		
	AN364-1032	. . NUT	1	AP,D
	AN960-10L	. . WASHER	1	AP,D
		———*———		
	AN392-25	. . PIN, Flat hd	2	AL,D
	AN381-2-6	. . PIN, Cotter	2	AL,D
	AN960D4	. . WASHER	2	AL,D
-4	AN210-4B	. . PULLEY	1	AL,D
		Attaching Parts		
	AN24-19A	. . BOLT	1	AL,D
	AN364-428	. . NUT	1	AL,D
	AN960D416	. . WASHER	4	AL,D
		———*———		
	AN392-29	. . PIN, Flat hd	1	AL,D
	AN392-25	. . PIN, Flat hd	1	AL,D
	AN381-2-6	. . PIN, Cotter	2	AL,D
	AN960D4	. . WASHER	2	AL,D
-5	AN210-4B	. . PULLEY	1	AL,D
		Attaching Parts		
	AN24-20A	. . BOLT	1	AL,D
	AN364-428	. . NUT	1	AL,D
	AN960D416	. . WASHER	4	AL,D
		———*———		
	42E1142-1	. . SERVO UNIT INSTALLATION, Directional	1	AP,D
-6	MG7001A21	. . . DRIVE ASSEMBLY, Directional servo (MH) (GFAE)	1	AP,D
		Attaching Parts		
	AN4-14A	. . . BOLT	2	AP,D
	AN4-15A	. . . BOLT	2	AP,D
	AN4-22A	. . . BOLT	2	AP,D
	AN365-428	. . . NUT	6	AP,D
	AN960D416L	. . . WASHER	4	AP,D
	AN960D416	. . . WASHER	8	AP,D
		———*———		
	42E1149-1	. . . SPACER	2	AP,D
-7	42E1152-5	. . CABLE ASSEMBLY	1	AP,D
-8	42E1152-2	. . CABLE ASSEMBLY	1	AP,D
	42S2189-1	. . SUPPORT, Pulley	1	AL,D
		Attaching Parts		
	AN4-7A	. . BOLT	3	AL,D
	AN365-428	. . NUT	3	AL,D
	AN960A416L	. . WASHER	3	AL,D
	AN960D416	. . WASHER	9	AL,D
		———*———		
	AN392-39	. . PIN, Flat hd	1	AL,D
	AN392-25	. . PIN, Flat hd	1	AL,D
	AN381-2-5	. . PIN, Cotter	2	AL,D
	AN960D4	. . WASHER	2	AL,D
-9	AN210-4B	. . PULLEY	1	AL,D

Figure and Index Number	Part Number	1 2 3 4 5 6 7 Description	Units per Assembly	Usable On Code
86A-		*Attaching Parts*		
	AN24-25	. . BOLT	1	AL,D
	AN381-2-12	. . PIN, Cotter	1	AL,D
	AN320-4	. . NUT	1	AL,D
	AN960D416	. . WASHER	3	AL,D
		————*————		
	42S2191-1	. . STRAP	2	AL,D
	42S2187-1	. . SUPPORT, Pulley	1	AL,D
		Attaching Parts		
	AN525-10R14	. . SCREW	4	AL,D
	AN365-1032	. . NUT	4	AL,D
	AN960A10	. . WASHER	8	AL,D
		————*————		
	AN392-43	. . PIN, Flat hd	1	AL,D
	AN392-33	. . PIN, Flat hd	1	AL,D
	AN381-2-5	. . PIN, Cotter	2	AL,D
	AN960D4	. . WASHER	2	AL,D
-10	AN210-4B	. . PULLEY	1	AL,D
		Attaching Parts		
	AN24-23	. . BOLT	1	AL,D
	AN381-2-12	. . PIN, Cotter	1	AL,D
	AN320-4	. . NUT	1	AL,D
	AN960D416	. . WASHER	1	AL,D
	AN960D416L	. . WASHER	2	AL,D
		————*————		
	42S2207-1	. . GUIDE, Cable	1	AL,D
		Attaching Parts		
	AN507-832R16	. . SCREW	1	AL,D
	AN365-832	. . NUT	1	AL,D
	AN960D8	. . WASHER	1	AL,D
		————*————		
	AN392-31	. . PIN, Flat hd	1	AL,D
	AN381-2-5	. . PIN, Cotter	1	AL,D
	AN960D4	. . WASHER	1	AL,D
-11	AN210-4B	. . PULLEY	1	AL,D
		Attaching Parts		
	AN24-20	. . BOLT	1	AL,D
	AN381-2-12	. . PIN, Cotter	1	AL,D
	AN960D416	. . WASHER	3	AL,D
		————*————		
	AN392-49	. . PIN, Flat hd	1	AL,D
	AN381-2-6	. . PIN, Cotter	1	AL,D
	AN960D4	. . WASHER	1	AL,D
-12	AN210-4B	. . PULLEY	1	AL,D
		Attaching Parts		
	AN24-30A	. . BOLT	1	AL,D
	AN364-428	. . NUT	1	AL,D
	AN960D416	. . WASHER	2	AL,D
		————*————		
	NAS43DD4-12	. . SPACER	1	AL,D
	NAS43DD4-48	. . SPACER	1	AL,D
	42E1142-2	. . SERVO UNIT INSTALLATION, Longitudinal	1	AP,D
-13	MG7001A21	. . . DRIVE ASSEMBLY, Longitudinal servo (MH) (GFAE)	1	AP,D
		Attaching Parts		
	AN4-22A	. . . BOLT	4	AP,D
	AN365-428	. . . NUT	4	AP,D
	AN960D416	. . . WASHER	8	AP,D
		————*————		
	42E1149-2	. . . SPACER	2	AP,D
-14	42E1152-6	. . CABLE ASSEMBLY	1	AP,D
-15	42E1152-3	. . CABLE ASSEMBLY	1	AP,D
		Attaching Parts		
	AN364-1032	. . NUT	1	AP,D

Figure and Index Number	Part Number	Description 1 2 3 4 5 6 7	Units per Assembly	Usable On Code
86A-	AN960D10	. . WASHER	1	AP,D
		———*———		
	AN392-59	. . PIN, Flat hd	2	AL,D
	AN392-57	. . PIN, Flat hd	1	AL,D
	AN381-2-6	. . PIN, Cotter	3	AL,D
	AN960D4	. . WASHER	3	AL,D
-16	AN210-4B	. . PULLEY	1	AL,D
		Attaching Parts		
	AN23-34A	. . BOLT	1	AL,D
	AN364-428	. . NUT	1	AL,D
	AN960D416	. . WASHER	4	AL,D
		———*———		
	42S2279-1	. . FITTING	1	AU
		Attaching Parts		
	AN23-10A	. . BOLT	2	AU
	AN23-12A	. . BOLT	2	AU
	AN364-1032	. . NUT	4	AU
	AN960D10	. . WASHER	8	AU
		———*———		
	AN392-35	. . PIN, Flat hd	2	AL,D
	AN381-2-6	. . PIN, Cotter	2	AL,D
	AN960D4	. . WASHER	2	AL,D
-17	AN210-4B	. . PULLEY	1	AL,D
		Attaching Parts		
	AN24-24A	. . BOLT	1	AL,D
	AN364-428	. . NUT	1	AL,D
	AN960D416	. . WASHER	2	AL,D
		———*———		
	AN392-25	. . PIN, Flat hd	2	AL,D
	AN381-2-6	. . PIN, Cotter	2	AL,D
	AN960D4	. . WASHER	2	AL,D
-18	AN210-4B	. . PULLEY	1	AL,D
		Attaching Parts		
	AN24-17A	. . BOLT	1	AL,D
	AN364-428	. . NUT	1	AL,D
	AN960D416	. . WASHER	4	AL,D
		———*———		
	AN392-39	. . PIN, Flat hd	1	AL,D
	AN381-2-6	. . PIN, Cotter	1	AL,D
	AN960D4	. . WASHER	1	AL,D
-19	AN210-3B	. . PULLEY	1	AL,D
		Attaching Parts		
	AN24-25	. . BOLT	1	AL,D
	AN381-2-12	. . PIN, Cotter	1	AL,D
	AN320-4	. . NUT	1	AL,D
	AN960D416	. . WASHER	2	AL,D
		———*———		
	NAS43-4-13	. . SPACER	1	AL,D
	NAS43-4-23	. . SPACER	1	AL,D
	AN392-25	. . PIN, Flat hd	1	AL,D
	AN381-2-6	. . PIN, Cotter	1	AL,D
	AN960D4	. . WASHER	1	AL,D
-20	AN210-3B	. . PULLEY	1	AL,D
		Attaching Parts		
	AN24-18	. . BOLT	1	AL,D
	AN381-2-12	. . PIN, Cotter	1	AL,D
	AN320-4	. . NUT	1	AL,D
	AN960D416	. . WASHER	4	AL,D
		———*———		
	42E1146-1	. . CONTROLLER INSTALLATION, Automatic pilot	1	AP,D
-21	42E1146-2	. . . TUBE ASSEMBLY	1	AP,D
		Attaching Parts		
	AN4-13A	. . . BOLT	2	AP,D

Figure and Index Number	Part Number	1 2 3 4 5 6 7 Description	Units per Assembly	Usable On Code
86A-	AN4-15A	. . . BOLT	1	AP,D
	AN364-428	. . . NUT	2	AP,D
	AN960D416L	. . . WASHER	3	AP,D
	AN960D416	. . . WASHER	2	AP,D
		———*———		
	42E1154-1	. . . . TUBE	1	AP,D
	42E1148-1	. . . . SUPPORT, Lower	1	AP,D
	42E1156-1	. . . . SUPPORT, Upper	1	AP,D
		Attaching Parts		
	AN24-38A	. . . . BOLT	2	AP,D
	AN364-428	. . . . NUT	2	AP,D
	AN960D416	. . . . WASHER	3	AP,D
		———*———		
-22	CG1A1	. . . CONTROLLER, Flight (MH) (GFAE)	1	AP,D
		Attaching Parts		
	AN4H13A	. . . BOLT	3	AP,D
	AN960D416	. . . WASHER	3	AP,D
		———*———		
	42E1108-1	. CONTROLLER INSTALLATION, Turn and pitch	1	AP,D
-23	42E1108-2	. . BRACKET ASSEMBLY	1	AP,D
-24	42E1108-3	. . BRACKET ASSEMBLY	1	AP,D
		Attaching Parts		
	AN525-10R12	. . SCREW	3	AP,D
	AN365-1032	. . NUT	3	AP,D
	AN960D10L	. . WASHER	3	AP,D
	AN960D10	. . WASHER	3	AP,D
		———*———		
-25	WG182A2	. . CONTROLLER, Flight (MH) (GFAE)	1	AP,D
		Attaching Parts		
	AN525-832R8	. . SCREW	4	AP,D
	AN365-832	. . NUT	4	AP,D
	AN960D8L	. . WASHER	4	AP,D
	AN960D8	. . WASHER	4	AP,D
		———*———		
-26	SG2A1	. . SWITCH, Heading (MH) (GFAE)	1	AP,D
		Attaching Parts		
	AN515DD8-6	. . SCREW	2	AP,D
	AN935B8L	. . WASHER, Lock	2	AP,D
		———*———		
	42E1204-1	. RELAY INSTALLATION, Automatic pilot	1	AP,D
-27	AN3303-1	. . RELAY	1	AP,D
	42E1203-1	. TRIM ADAPTER UNIT INSTALLATION, Automatic pilot	1	AP,D
-28	SG4A-1	. . INTERRUPTER (MH) (GFAE)	1	AP,D
		Attaching Parts		
	AN515-8R14	. . SCREW	4	AP,D
	AN364-832	. . NUT	4	AP,D
	AN960D8	. . WASHER	8	AP,D
		———*———		
	42E1200-1	. EQUIPMENT INSTALLATION, Automatic pilot	1	AP,D
	42E1200-2	. . EQUIPMENT ASSEMBLY, Automatic pilot	1	AP,D
-29	QG5A1	. . . CHASSIS, Mounting (MH) (GFAE)	1	AP,D
		Attaching Parts		
	AN4-11A	. . . BOLT	4	AP,D
	AN960D416L	. . . WASHER	4	AP,D
		———*———		
-30	BG1A1	. . . CALIBRATOR (MH) (GFAE)	1	AP,D
-31	RG7064B1	. . . AMPLIFIER (MH) (GFAE)	4	AP,D
-32	JG7005A24	. . . GYRO, Roll rate (MH) (GFAE)	1	AP,D
	JG7005A24	. . . GYRO, Pitch rate (MH) (GFAE)	1	AP,D
-33	JG7005A25	. . . GYRO, Yaw rate (MH) (GFAE)	1	AP,D
-34	JG7001A21	. . . GYRO, Vertical (MH) GFAE)	1	AP,D
-35	RG7042A1	. . . COUPLER, Compass (MH) (GFAE)	1	AP,D

Equipment

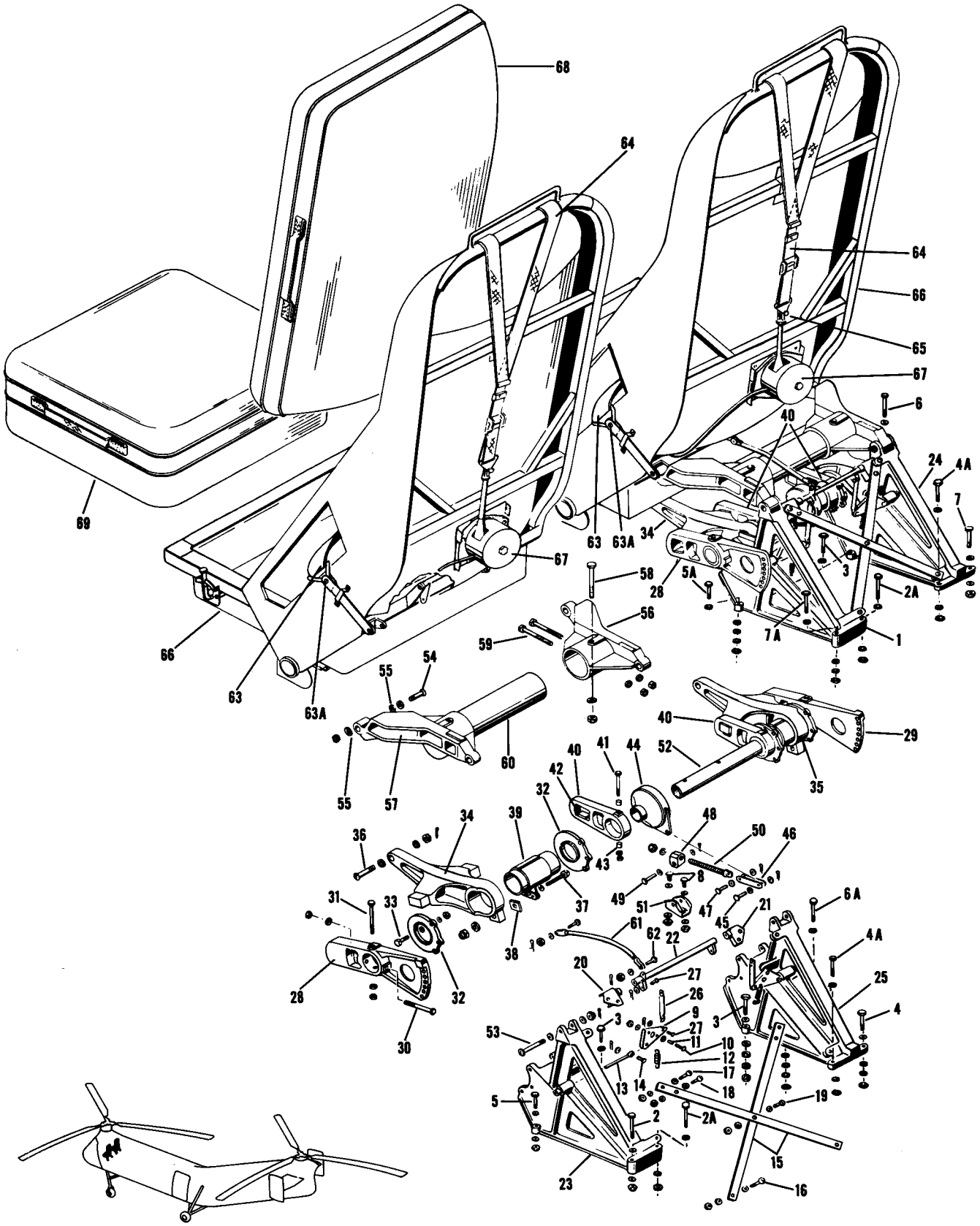

Figure 87. Pilot's and Co-Pilot's Seats

Figure and Index Number	Part Number	Description 1 2 3 4 5 6 7	Units per Assembly	Usable On Code
87-	22E4001-7	SUPPORT INSTALLATION, Co-pilot's seat	1	
	22E4001-8	SUPPORT INSTALLATION, Pilot's seat	1	
	22E4001-9	. SUPPORT ASSEMBLY	1	
-1	22E4001-10	. SUPPORT ASSEMBLY	1	
		Attaching Parts		
-2	AN4-23A	. BOLT	1	
	AN365-428	. NUT	1	
	AN960D416	. WASHER (Used under nut)	1	
	AN960D416L	. WASHER (Used under head)	1	
-2A	AN4-22A	. BOLT	2	
	AN365-428	. NUT	2	
	AN960D416	. WASHER (Used under nut)	2	
	AN960D416L	. WASHER (Used under head)	2	
-3	AN4-13A	. BOLT	4	
	AN365-428	. NUT	4	
	AN960D416	. WASHER (Used under nut)	12	
	AN960D416L	. WASHER (Used under head)	4	
-4	AN4-17A	. BOLT	1	
	AN365-428	. NUT	1	
	AN960D416	. WASHER (Used under nut)	2	
	AN960D416L	. WASHER (Used under head)	1	
-4A	AN4-17A	. BOLT	2	
	AN365-428	. NUT	2	
	AN960D416	. WASHER (Used under nut)	2	
	AN960D416L	. WASHER (Used under head)	2	
-5	AN4-13A	. BOLT	1	
	AN365-428	. NUT	1	
	AN960D416	. WASHER (Used under nut)	1	
	AN960D416L	. WASHER (Used under head)	1	
-5A	AN4-13A	. BOLT	1	
	AN365-428	. NUT	1	
	AN960D416	. WASHER (Used under nut)	3	
	AN960D416L	. WASHER (Used under head)	1	
-6	AN4-11A	. BOLT	1	
	AN365-428	. NUT	1	
	AN960D416	. WASHER (Used under nut)	1	
	AN960D416L	. WASHER (Used under head)	1	
-6A	AN4-13A	. BOLT	1	
	AN365-428	. NUT	1	
	AN960D416	. WASHER (Used under nut)	3	
	AN960D416L	. WASHER (Used under head)	1	
-7	AN4-20A	. BOLT	1	
	AN365-428	. NUT	1	
	AN960D416	. WASHER (Used under nut)	1	
	AN960D416L	. WASHER (Used under head)	1	
-7A	AN4-22A	. BOLT	1	
	AN365-428	. NUT	1	
	AN960D416	. WASHER (Used under nut)	2	
	AN960D416L	. WASHER (Used under head)	1	
-8	AN3-5A	. BOLT	4	
	AN365-1032	. NUT	4	
	AN960D10	. WASHER (One under head one under nut)	8	
		*		
	22E4086-1	. . SUPPORT ASSEMBLY, Co-pilot's seat	1	
	22E4086-2	. . SUPPORT ASSEMBLY, Pilot's seat	1	
-9	22E4040-33	. . . BELLCRANK	2	
	or			
	22E4086-5	. . . BELLCRANK	4	
		Attaching Parts		
-10	AN3-10A	. . . BOLT	1	
	AN365-1032	. . . NUT	1	

Figure and Index Number	Part Number	1 2 3 4 5 6 7 Description	Units per Assembly	Usable On Code
87-	AN960D10	. . . WASHER	2	
		———*———		
-11	22E4086-3	. . . BUSHING	2	
-12	22E4153-1	. . . SPRING	2	
-13	22E4040-35	. . . PIN	2	
		Attaching Parts		
-14	AN392-11	. . . PIN, Flat hd	1	
	AN381-2-8	. . . PIN, Cotter	1	
	AN960-4	. . . WASHER	1	
		———*———		
-15	22E4086-4	. . . STRAP	2	
		Attaching Parts		
-16	AN24-14A	. . . BOLT	2	
-17	AN24-16A	. . . BOLT	2	
-18	AN525-10-10	. . . SCREW	2	
-19	AN525-10-11	. . . SCREW	1	
	AN364-428	. . . NUT	4	
	AN364-1032	. . . NUT	3	
	AN960D416	. . . WASHER	4	
	AN960D416L	. . . WASHER	4	
	AN960D10	. . . WASHER	3	
	AN960D10L	. . . WASHER	3	
		———*———		
-20	22E4157-11	. . . CLIP ASSEMBLY, LH	1	S
	22E4204-2	. . . FITTING, LH	1	T,B
	or			
	22E4157-15	. . . CLIP ASSEMBLY, LH	1	T,B
-21	22E4157-12	. . . CLIP ASSEMBLY, RH	1	S
	22E4205-2	. . . FITTING, RH	1	T,B
	or			
	22E4157-16	. . . CLIP ASSEMBLY, RH	1	T,B
-22	22E4157-1	. . . TUBE, Torque	1	
-23	22E4087-1	. . . BRACKET ASSEMBLY, LH	2	
-24	22E4087-2	. . . BRACKET ASSEMBLY, RH	1	
-25	22E4087-4	. . . BRACKET ASSEMBLY, RH	1	
-26	22E4051-10	. . STRAP	2	
		Attaching Parts		
-27	AN392-9	. . PIN	2	
	AN380-2-1	. . PIN, Cotter	2	
	AN960-6	. . WASHER	2	
		———*———		
-28	22E4046-1	. . SECTOR ASSEMBLY, LH	1	
-29	22E4046-2	. . SECTOR ASSEMBLY, RH	1	
		Attaching Parts		
-30	AN24-48A	. . BOLT	1	
-31	AN24-50A	. . BOLT	1	
	AN365-428	. . NUT	2	
	AN960D416	. . WASHER	2	
		———*———		
	22E4051-6	. . . PAD	1	
-32	22E4045-1	. . BEARING ASSEMBLY	4	
		Attaching Parts		
-33	AN4-11A	. . BOLT	3	
	AN364-428	. . NUT	3	
	AN960D416	. . WASHER	3	
	AN960D416L	. . WASHER	3	
		———*———		
	22E4045-2	. . . HOUSING	1	
	22E4045-3	. . . BUSHING	1	
-34	22E4158-1	. . ARM ASSEMBLY, Seat support LH	1	
-35	22E4158-2	. . ARM ASSEMBLY, Seat support RH	1	

Figure and Index Number	Part Number	1 2 3 4 5 6 7 Description	Units per Assembly	Usable On Code
87-		*Attaching Parts*		
-36	AN25-31	. . BOLT	1	
-37	AN4-11A	. . BOLT	1	
	AN381-2-12	. . PIN, Cotter	1	
	AN320-5	. . NUT	1	
	AN365-428	. . NUT	1	
	AN960D416	. . WASHER	2	
	AN960D516	. . WASHER	2	
		———*———		
	22E4158-3	. . . ARM, LH	1	
	22E4158-4	. . . ARM, RH	1	
	22E4177-1	. . . BUSHING	2	
-38	22E4202-4	. . LUG, Serrated	2	
	or			
	22E4202-2	. . LUG, Serrated	2	
-39	22E4042-1	. . SPRING ASSEMBLY	2	J,C,CW
	22E4042-4	. . SPRING ASSEMBLY	2	BY
-40	22E4047-1	. . STOP ASSEMBLY	2	
		Attaching Parts		
-41	AN24-46A	. . BOLT	1	
	AN365-428	. . NUT	1	
	AN960D416	. . WASHER	1	
		———*———		
	22E4047-2	. . . STOP	1	
-42	22E4051-6	. . . PAD	1	
-43	NAS43DD4-15	. . SPACER	2	
-44	22E4179-1	. . SPRING ASSEMBLY	1	A
	22E4197-3	. . SPRING ASSEMBLY	1	B
		Attaching Parts		
-45	AN393-7	. . PIN, Flat hd	1	A
	AN393-11	. . PIN, Flat hd	1	B
	AN23-29A	. . BOLT	2	
	AN364-1032	. . NUT	2	
	AN381-2-8	. . PIN, Cotter	1	
	AN960D10L	. . WASHER	1	A
	AN960-416	. . WASHER	1	B
		———*———		
	22E4043-1	. . . SPRING	1	A
	22E4195-1	. . . SPRING	1	B
	or			
	22E4195-3	. . . SPRING	1	B
-46	22E4179-4	. . . LINK	2	A
	22E4197-5	. . . LINK	2	B
		Attaching Parts		
-47	AN393-7	. . . PIN, Flat hd	1	A
	AN394-11	. . . PIN, Flat hd	1	B
	AN381-2-8	. . . PIN, Cotter	1	
	AN960D10L	. . . WASHER	2	A
	AN960-416	. . . WASHER	2	B
		———*———		
-48	22E4179-5	. . . BLOCK, Pivot	1	A
	22E4197-6	. . . BLOCK, Pivot	1	B
		Attaching Parts		
-49	AN393-33	. . . PIN, Flat hd	1	A
	AN394-33	. . . PIN, Flat hd	1	B
	AN381-2-8	. . . PIN, Cotter	1	
	AN960D10	. . . WASHER	1	A
	AN960D10L	. . . WASHER	1	A
	AN960D416	. . . WASHER	1	B
	AN960D416L	. . . WASHER	1	B
	AN365-524	. . . NUT	1	A

Figure and Index Number	Part Number	Description 1 2 3 4 5 6 7	Units per Assembly	Usable On Code
87-	AN365-624	. . . NUT	1	B
	AN960D516	. . . WASHER	1	A
	AN960D616L	. . . WASHER	1	B
		———*———		
-50	22E4179-6	. . . BOLT	1	A
	22E4197-4	. . . BOLT	1	B
-51	22E4179-3	. . . BRACKET	1	A
	22E4197-7	. . . BRACKET	1	B
-52	22E4051-3	. . TUBE	1	J,AK
	22E4051-12	. . TUBE	1	EN
	22E4051-13	. . TUBE	1	EO
	22E4100-1	. LINK ASSEMBLY, Seat support	1	
		Attaching Parts		
-53	AN25-42	. BOLT	2	
-54	AN25-38	. BOLT	2	
	AN381-2-12	. PIN, Cotter	2	
	AN320-5	. NUT	2	
	AN364-524A	. NUT	2	
	AN960-516L	. WASHER	2	
	AN960D516	. WASHER	2	
	AN960D516L	. WASHER	4	
-55	22E4156-1	. WASHER, Laminated	12	
		———*———		
-56	22E4152-3	. . LINK ASSEMBLY	1	
-57	22E4152-4	. . LINK ASSEMBLY	1	
		Attaching Parts		
-58	AN5DD36A	. . BOLT	2	
-59	AN6DD37A	. . BOLT	4	
	AN365D524	. . NUT	2	
	AN365D624	. . NUT	4	
	AN960D516	. . WASHER	2	
	AN960D616	. . WASHER	4	
		———*———		
	22E4152-1	. . . LINK	1	
	22E4152-2	. . . LINK	1	
	22E4177-1	. . . BUSHING	4	
-60	22E4100-2	. . TUBE	1	
-61	22E4157-3	. ROD ASSEMBLY	1	
		Attaching Parts		
-62	AN23-10	. BOLT	2	
	AN381-2-10	. PIN, Cotter	2	
	AN320-3	. NUT	2	
	AN960-10L	. WASHER	2	
		———*———		
-63	54H19651	. BELT, Safety (IR) GFAE)	1	
		Attaching Parts		
-63A	AN24-13A	. BOLT	2	
	AN364-428	. NUT	2	
	AN960D16	. WASHER	2	
		———*———		
-64	50D3770	. HARNESS, Shoulder (AHT) (GFAE)	1	J.ED
	53D20961	. HARNESS, Shoulder (AHT) (GFAE)	1	DU
		Attaching Parts		
-65	AN393-15	. PIN, Flat hd	1	
	AN381-2-6	. PIN, Cotter	1	
	AN960-10L	. WASHER	2	
		———*———		
-66	439	. SEAT ASSEMBLY, Pilot's and co-pilot's (MWC)	2	J.EM
	439A	. SEAT ASSEMBLY, Pilot's and co-pilot's (MWC)	2	EI,HQ
	539	. SEAT ASSEMBLY, Pilot's and co-pilot's (AFJ)	2	HI
-67	0-3903-0-4055	. . REEL, Inertia (ASE)	1	J,EM

Figure and Index Number	Part Number	1 2 3 4 5 6 7 Description	Units per Assembly	Usable On Code
87-	0-3903NN-157	. . REEL, Inertia (ASE)	1	EI,EH
-68	22E4050-1	CUSHION ASSEMBLY, Back	2	
-69	22E4050-2	CUSHION ASSEMBLY, Seat	2	

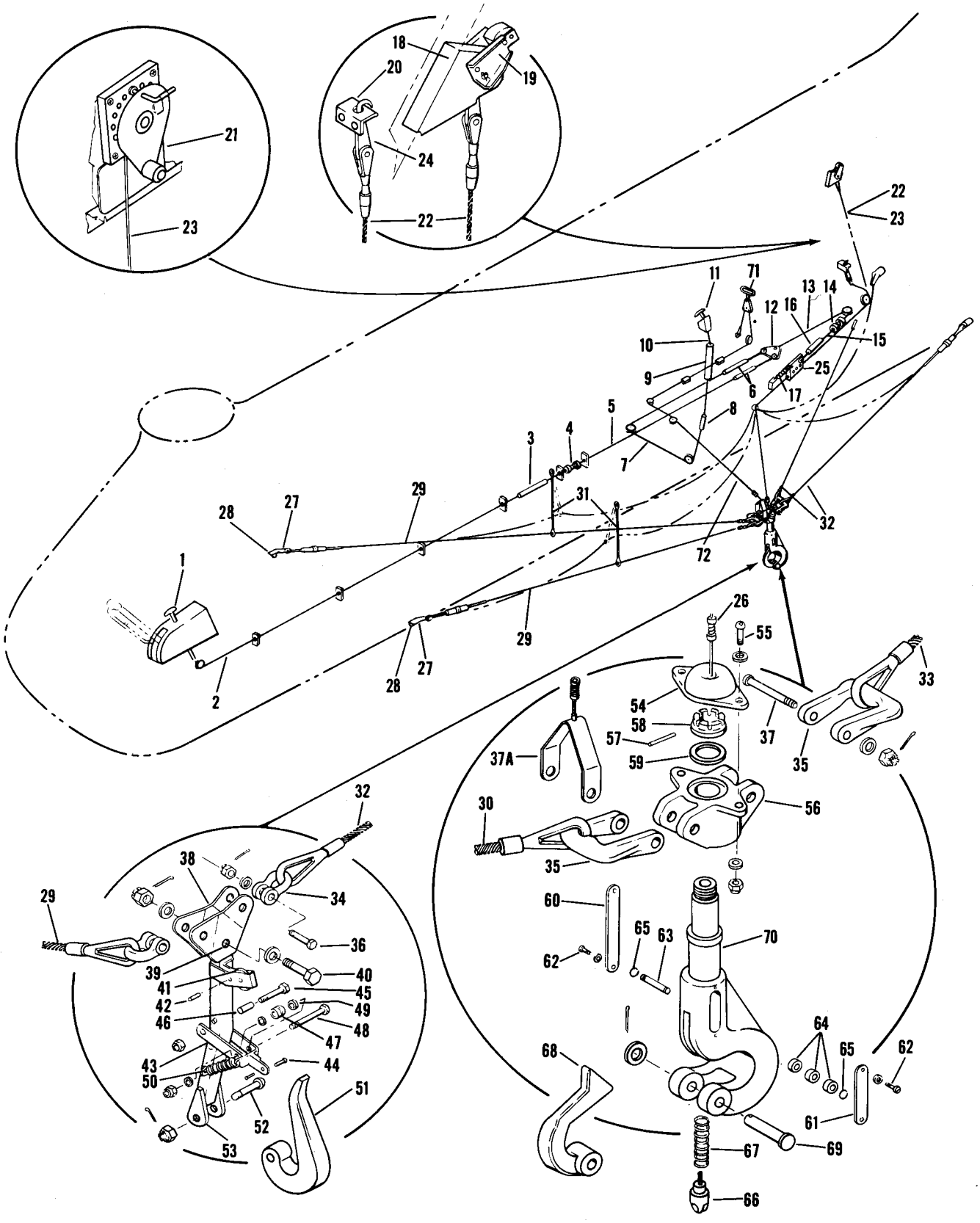

Figure 88. Cargo Sling

Figure and Index Number	Part Number	Description 1 2 3 4 5 6 7	Units per Assembly	Usable On Code
88-	22E5095-1	SLING INSTALLATION, Cargo	1	A
	22E5134-1	SLING INSTALLATION, Cargo	1	E
	42E5525-1	SLING INSTALLATION, Cargo	1	AU
-1	42E5526-1	. HANDLE ASSEMBLY, Cargo sling release	1	J,EU
	42E5534-3	. CABLE ASSEMBLY, Cargo sling release	1	EV
	42E5527-2	. . HANDLE	1	EV
-2	22E5126-1	. CABLE ASSEMBLY, Cargo sling release	1	J
	42E5528-1	. CABLE ASSEMBLY, Cargo sling release	1	EU
		Attaching Parts		
	AN393-17	. PIN, Flat hd	1	
	AN381-2-6	. PIN, Cotter	1	
	AN960D10	. WASHER	1	
	AN960D10L	. WASHER	1	
		———*———		
-3	42E5561-1	. REGULATOR ASSEMBLY, Cargo sling release	1	A
	42E5561-2	. REGULATOR ASSEMBLY, Cargo sling release	1	B
		Attaching Parts		
	AN393-31	. PIN, Flat hd	1	
	AN381-2-6	. PIN, Cotter	1	
	AN960D10	. WASHER	1	
	AN960D10L	. WASHER	1	
		———*———		
	42E5564-1	. . FITTING, End	1	
	42E5569-1	. . CABLE ASSEMBLY	1	A
	42E5569-3	. . CABLE ASSEMBLY	1	B
	42E5562-1	. . TUBE	1	
-4	RA-2258-3	. QUICK DISCONNECT (ACA)	1	
	42E7137-1	. ACTUATOR INSTALLATION, Rotary	1	AU
	AYLC-4956-1	. . ACTUATOR, Rotary (BCC)	1	AU
	or			
	AYLC-4956	. . ACTUATOR, Rotary (BCC)	1	AU
		Attaching Parts		
	AN4-6A	. . BOLT	4	AU
	AN3-10A	. . BOLT	2	AU
	AN365-428	. . NUT	4	AU
	AN365-1032	. . NUT	2	AU
	AN960D10	. . WASHER	2	AU
	AN960D10L	. . WASHER	2	AU
	AN960D416	. . WASHER	4	AU
	AN960D416L	. . WASHER	4	AU
		———*———		
	42E7078-1	. . FAIRLEAD	1	DN
	42E7078-3	. . FAIRLEAD	1	DO
		Attaching Parts		
	AN23-13	. . BOLT	1	AU
	AN509-10-16	. . SCREW	1	AU
	AN365-1032	. . NUT	2	AU
	AN960-10L	. . WASHER	3	AU
		———*———		
	42E7078-2	. . STRIP, Rubbing	1	AU
	2182-2	. . RECEPTACLE, Stowage (CED)	1	AU
-5	22E5126-3	. CABLE ASSEMBLY, Cargo sling release	1	J
	42E5567-7	. CABLE ASSEMBLY, Cargo sling release	1	AU
	or			
	42E5567-1	. CABLE ASSEMBLY, Cargo sling release	1	AU
	AN155-16L	. . BARREL, Turnbuckle (used with 42E5567-7)	2	AU
	AN155-16L	. . BARREL, Turnbuckle (used with 42E5567-1)	1	AU
	AN161-16RL	. . FORK, Turnbuckle	1	AU
-6	AN155-16L	. BARREL, Turnbuckle	2	J
	AN161-16RL	. FORK, Turnbuckle	2	J

Figure and Index Number	Part Number	Description 1 2 3 4 5 6 7	Units per Assembly	Usable On Code
88-7	22E5126-2	. CABLE ASSEMBLY, Cargo sling release	1	J
	42E5567-2	. CABLE ASSEMBLY, Cargo sling release	1	AU
-8	RA-2258-3	. QUICK DISCONNECT (ACA)	1	
-9	42E5561-1	. REGULATOR ASSEMBLY, Cargo sling release	1	A
	42E5561-2	. REGULATOR ASSEMBLY, Cargo sling release	1	B
		Attaching Parts		
	AN393-31	. PIN, Flat hd	1	
	AN381-2-6	. PIN, Cotter	1	
	AN960D10	. WASHER	1	
	AN960D10L	. WASHER	1	
		———*———		
-10	22E5126-6	. CABLE ASSEMBLY, Cargo sling release	1	J
	42E5534-5	. CABLE ASSEMBLY, Cargo sling release	1	AU
	or			
	42E5534-1	. CABLE ASSEMBLY, Cargo sling release	1	AU
-11	42E5527-2	. . HANDLE	1	
	28-2-G	. . SLEEVE, Nicopress (NTS) (used with 42E5534-5)	1	
-12	42E5532-1	. PLATE, Cargo sling release junction	1	
		Attaching Parts		
	AN393-11	. PIN, Flat hd	3	
	AN381-2-6	. PIN, Cotter	3	
	AN960-10	. WASHER	3	
		———*———		
-13	22E5126-5	. CABLE ASSEMBLY, Cargo sling release	1	J
	42E5570-2	. CABLE ASSEMBLY, Cargo sling release	1	AU
-14	RA-2258-3	. QUICK DISCONNECT (ACA)	1	
-15	22E5126-4	. CABLE ASSEMBLY, Cargo sling release	1	J
	42E5570-1	. CABLE ASSEMBLY, Cargo sling release	1	BW
	42E5570-8	. CABLE ASSEMBLY, Cargo sling release	1	D,BX
	42E5570-3	. . CABLE SUBASSEMBLY	1	BW
	42E5570-9	. . CABLE SUBASSEMBLY	1	D,BX
	42E5570-4	. . CABLE SUBASSEMBLY	1	BW
	42E5570-10	. . CABLE SUBASSEMBLY	1	D,BX
	AN155-16L	. . BARREL, Turnbuckle	1	AU
-16	AN155-16S	. BARREL, Turnbuckle	1	J
	AN161-16RS	. FORK, Turnbuckle	1	J
		Attaching Parts		
	AN525-10-12	. SCREW	1	
	AN365-1032	. NUT	1	
	AN960-10	. WASHER	1	
		———*———		
-17	22E5140-1	. SPRING	1	J
	22E5138-1	. CLIP	1	J
	22E5124-1	. BRACKETS INSTALLATION, Cargo hook stowage cable	1	A
-18	22E5124-2	. . BRACKET ASSEMBLY	1	A
		Attaching Parts		
	AN525-10-8	. . SCREW	3	A
	AN365-1032	. . NUT	3	A
	AN960D10	. . WASHER	6	A
		———*———		
-19	22E5123-1	. . . HANDLE ASSEMBLY	1	A
		Attaching Parts		
	AN393-11	. . . PIN, Flat hd	2	A
	AN392-35	. . . PIN, Flat hd	1	A
	AN381-2-8	. . . PIN, Cotter	3	A
	AN960D10	. . . WASHER	2	A
	AN960D8	. . . WASHER	1	A
		———*———		
	NAS43-3-55	. . . SPACER	1	A
-20	22E5124-3	. . ANGLE	1	A
		Attaching Parts		
	AN525-10-8	. . SCREW	2	A
	AN365-1032	. . NUT	2	A

Figure and Index Number	Part Number	1 2 3 4 5 6 7 Description	Units per Assembly	Usable On Code
88-	AN960D10	. . WASHER	4	A
		———*———		
	22E5136-1	. REEL INSTALLATION, Cargo sling stowage	1	E
-21	22E5136-2	. . REEL ASSEMBLY, Cargo sling stowage	1	E
		Attaching Parts		
	AN509DD10R12	. . SCREW	4	E
	AN364D1032	. . NUT	4	E
	AN960D10	. . WASHER	4	E
		———*———		
-22	22E5120-1	. CABLE ASSEMBLY, Release and stowage cargo hook	1	A
-23	22E5137-5	. CABLE ASSEMBLY, Release and stowage cargo hook	1	E
-24	22E5121-1	. . HOOK	1	A
		Attaching Parts		
	AN393-13	. . PIN, Flat hd	1	A
	AN381-2-8	. . PIN, Cotter	1	A
	AN960D10	. . WASHER	1	A
		———*———		
	AN161-16RS	. . FORK, Turnbuckle	1	A
	AN155-16S	. . BARREL, Turnbuckle	1	A
-25	22E5120-5	. . COLLAR, Guide	1	
-26	RA-2258-3	. . QUICK DISCONNECT (ACA)	1	E
	22E5094-1	. SLING ASSEMBLY, Exterior cargo	1	A
▌	42E5501-4	. SLING ASSEMBLY, Exterior cargo	1	IZ,IX
▌	42E5501-5	. SLING ASSEMBLY, Exterior cargo	1	IY
		Attaching Parts		
	AN398-29	. PIN, Flat hd	4	
	AN381-3-16	. PIN, Cotter	4	A
	AN381-3-14	. PIN, Cotter	4	B
	AN960-816	. WASHER	4	A
	AN960C816	. WASHER	4	B
		———*———		
	22E5142-2	. . LINK	4	A
	or			
	22E5142-1	. . LINK	4	A
	22E5142-2	. . LINK	2	B
	or			
	22E5142-1	. . LINK	2	B
		Attaching Parts		
▌	AN398-37	. . PIN	1	
	AN381-3-16	. . PIN, Cotter	1	A
	AN381-3-14	. . PIN, Cotter	1	B
	AN960-816	. . WASHER	1	A
	AN960C816	. . WASHER	1	B
		———*———		
-27	22E5098-2	. . FITTING, Fwd	2	A
	42S5175-1	. . FITTING, Fwd	2	B
		Attaching Parts		
-28	22S4053-5	. . BOLT, See fig. 12	Ref	J
	42S4453-1	. . BOLT, See fig. 12	Ref	AU
		———*———		
	PHS80803-1.500	. . TUBING (PHL)	2	B
-29	22E5097-1	. . CABLE ASSEMBLY, Exterior cargo sling	2	A
-30	42E5502-7	. . CABLE ASSEMBLY, Exterior cargo sling	1	B
	or			
	42E5502-1	. . CABLE ASSEMBLY, Exterior cargo sling	1	B
-31	22E5125-1	. . CORD ASSEMBLY, Elastic	2	A
	42E5514-1	. . CORD ASSEMBLY, Elastic	2	B
	22E5125-3	. . CLAMP	1	
-32	22E5097-2	. . CABLE ASSEMBLY, Exterior cargo sling	2	A
-33	42E5502-3	. . CABLE ASSEMBLY, Exterior cargo sling	2	B
-34	AN115-80	. . SHACKLE	4	A
-35	42E5509-1	. . SHACKLE	2	B
	22E5096-1	. . HOOK ASSEMBLY, Cargo sling	1	A

Figure and Index Number	Part Number	Description	Units per Assembly	Usable On Code
88-	42E5503-3	. . HOOK ASSEMBLY, Cargo sling	1	B
		Attaching Parts		
-36	AN6-11	. . BOLT	4	A
-37	AN30-54	. . BOLT	2	IZ,IX
	AN30-54	. . BOLT	1	IY
	AN30-56	. . BOLT	1	IY
	AN381-3-16	. . PIN, Cotter	4	A
	AN381-4-18	. . PIN, Cotter	2	B
	AN310-6	. . NUT	4	A
	AN320C10	. . NUT	2	B
	AN960-616	. . WASHER	4	A
	AN960C1016	. . WASHER	4	IZ,IX
	AN960C1016	. . WASHER	2	IY
	AN960C1016L	. . WASHER	2	IY
		———*———		
-37A	42E5585-1	. . . YOKE ASSEMBLY	1	IY
-38	22E5096-19	. . . TIEPLATE, LH	1	A
-39	22E5096-20	. . . TIEPLATE, RH	1	A
		Attaching Parts		
-40	AN8-22	. . . BOLT	1	A
	AN381-3-20	. . . PIN, Cotter	1	A
	AN310-8	. . . NUT	1	A
	AN960-816	. . . WASHER	1	A
		———*———		
-41	AN210-1B	. . . PULLEY	1	A
		Attaching Parts		
	AN23-12A	. . . BOLT	1	A
	AN364-1032	. . . NUT	1	A
	AN960-10L	. . . WASHER	1	A
		———*———		
-42	NAS427K8	. . . PIN, Pulley guard	1	A
-43	22E5096-3	. . . WELD ASSEMBLY	1	A
		Attaching Parts		
-44	AN393-11	. . . PIN, Flat hd	1	A
-45	AN4-14A	. . . BOLT	1	A
	AN381-2-6	. . . PIN, Cotter	1	A
	AN960-10	. . . WASHER	1	A
		———*———		
-46	22E5096-14	. . . SPACER	1	A
-47	CYR-¾	. . . BEARING (MGLA)	1	A
		Attaching Parts		
-48	AN4-14A	. . . BOLT	1	A
	AN365-428	. . . NUT	1	A
		———*———		
-49	22E5096-13	. . . SPACER	2	A
-50	42E5544-1	. . . SPRING	1	A
-51	42E5541-1	. . . HOOK	1	A
		Attaching Parts		
-52	AN28-25	. . . BOLT	1	A
	AN381-3-20	. . . PIN, Cotter	1	A
	AN320-8	. . . NUT	1	A
		———*———		
-53	22E5096-2	. . . WELD ASSEMBLY	1	A
-54	42E5513-1	. . . FAIRLEAD	1	B
		Attaching Parts		
-55	AN502C10R14	. . . SCREW	2	B
	AN363-1032	. . . NUT	2	B
	AN960-10L	. . . WASHER	2	B
		———*———		
-56	42E5512-1	. . . FITTING ASSEMBLY, Upper	1	B
		Attaching Parts		
-57	79-028-125-0625	. . . PIN, Roll (EN)	1	B
-58	42E5516-3	. . . NUT	1	B
-59	42E5516-1	. . . WASHER	1	B
		———*———		

Figure and Index Number	Part Number	Description 1 2 3 4 5 6 7	Units per Assembly	Usable On Code
88-60	42E5519-1	. . . PLATE, Cover	1	B
-61	42E5519-2	. . . PLATE, Cover	1	B
		Attaching Parts		
-62	AN515-8R4	. . . SCREW	2	B
	AN936A8	. . . WASHER, Lock	2	B
		———*———		
-63	42E5516-4	. . . PIN	1	B
	42E5516-2	. . . PIN (Alternate)	1	B
-64	HSBG6CR	. . . BEARING (HLF)	3	B
		Attaching Parts		
-65	NAS51-37	. . . RING, Retainer	2	B
		———*———		
-66	42E5511-4	. . . PLUNGER ASSEMBLY	1	B
-67	42E5571-1	. . . SPRING, Compression	1	B
-68	42E5504-1	. . . HOOK	1	B
		Attaching Parts		
-69	AN402-73	. . . PIN, Flat hd	1	B
	AN381-4-20	. . . PIN, Cotter	1	B
	AN960-1216L	. . . WASHER	1	B
		———*———		
-70	42E5507-4	. . . ARM ASSEMBLY	1	B
	42E5579-1	. CABLE INSTALLATION, External cargo sling retracting	1	HI
-71	42E5581-1	. . HANDLE ASSEMBLY	1	HI
	AN219-2	. . . PULLEY	1	HI
		Attaching Parts		
	AN24-14A	. . . BOLT	1	HI
	AN364-428	. . . NUT	1	HI
	AN960D416L	. . . WASHER	2	HI
		———*———		
	42E5581-2	. . . HANDLE	1	HI
	42E5582-1	. . . BUNGEE	1	HI
	AN219-2	. . . PULLEY	2	HI
		Attaching Parts		
	AN4-10A	. . BOLT	2	HI
	AN365-428	. . NUT	2	HI
	AN960D416	. . WASHER	2	HI
	AN960D416L	. . WASHER	2	HI
		———*———		
	AN219-4	. . PULLEY	1	HI
		Attaching Parts		
	AN24-28A	. . BOLT	1	HI
	AN364-428	. . NUT	1	HI
	AN960D416L	. . WASHER	1	HI
	NAS43DD4-74	. . SPACER	1	HI
		———*———		
-72	42E5580-1	. . CABLE ASSEMBLY	1	HI
		Attaching Parts		
	AN42B12A	. . BOLT, Eye	1	HI
	AN365-1032	. . NUT	1	HI
	AN960D10	. . WASHER	2	HI
	42S7179-4	. . SPACER	1	HI
		———*———		
	TA778-D4	. . CLAMP ASSEMBLY (THAS)	2	HI
		Attaching Parts		
	AN525-10R9	. . SCREW	2	HI
	AN364-1032	. . NUT	2	HI
	AN960D8	. . WASHER	2	HI
	AN960D8L	. . WASHER	2	HI
		———*———		
	42S4676-1	BRACKET, Cargo sling stowage	1	
		Attaching Parts		
	AN525-10R9	SCREW	3	
	AN960D10	WASHER	3	
		———*———		

Equipment

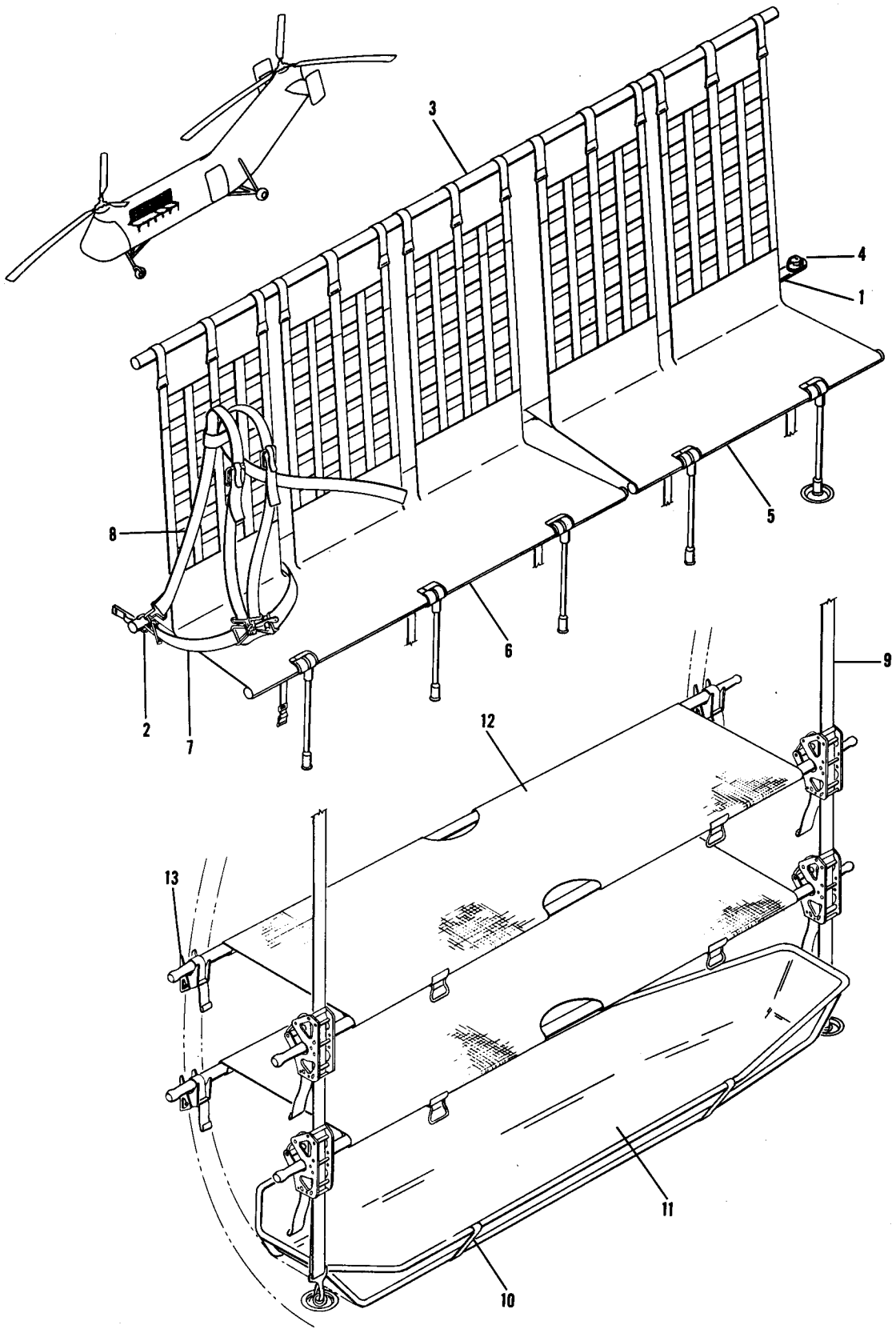

Figure 89. Troop Seats and Litters

Figure and Index Number	Part Number	1 2 3 4 5 6 7 Description	Units per Assembly	Usable On Code
89-	22E4020-100	SEAT, BELT AND HARNESS INSTALLATION, Troop	1	J
	42E4020-1	SEAT AND BELT INSTALLATION, Troop	1	D
	42E4020-29	SEAT AND BELT INSTALLATION, Troop	1	C
		Attaching Parts		
	AN4-21	BOLT	25	J
	AN24-30	BOLT	2	D
	AN24-30	BOLT	3	C
	AN24-31A	BOLT	33	AU
	AN381-2-8	PIN, Cotter	25	J
	AN310-4	NUT	25	J
	AN364-428	NUT	35	D
	AN364-428	NUT	36	C
	AN960D416	WASHER	25	J
	AN960D416	WASHER	70	D
	AN960D416	WASHER	72	C
	AN960D416L	WASHER	25	J
	AN960D416L	WASHER	35	D
	AN960D416L	WASHER	36	C
		———*———		
-1	22E4020-2	. SUPPORT ASSEMBLY, RH	1	J
	22E4020-22	. SUPPORT ASSEMBLY, RH	1	J
	42E4020-5	. TUBE ASSEMBLY, Support RH	1	HZ
	42E4020-55	. TUBE ASSEMBLY, Support RH	1	IA
	42E4020-33	. TUBE ASSEMBLY, Support RH	1	IB
	42E4020-54	. TUBE ASSEMBLY, Support RH	1	IC
	42E4020-6	. TUBE ASSEMBLY, Support RH	1	HZ
	42E4020-57	. TUBE ASSEMBLY, Support RH	1	IA
	42E4020-34	. TUBE ASSEMBLY, Support RH	1	IB
	42E4020-56	. TUBE ASSEMBLY, Support RH	1	IC
	22E4020-3	. SUPPORT ASSEMBLY, LH	1	J
	22E4020-21	. SUPPORT ASSEMBLY, LH	1	J
	42E4020-2	. TUBE ASSEMBLY, Support LH	1	HZ
	42E4020-48	. TUBE ASSEMBLY, Support LH	1	IA
	42E4020-30	. TUBE ASSEMBLY, Support LH	1	IB
	42E4020-49	. TUBE ASSEMBLY, Support LH	1	IC
	42E4020-3	. TUBE ASSEMBLY, Support LH	1	HZ
	42E4020-51	. TUBE ASSEMBLY, Support LH	1	IA
	42E4020-31	. TUBE ASSEMBLY, Support LH	1	IB
	42E4020-50	. TUBE ASSEMBLY, Support LH	1	IC
	42E4020-4	. TUBE ASSEMBLY, Support LH	1	HZ
	42E4020-53	. TUBE ASSEMBLY, Support LH	1	IA
	42E4020-32	. TUBE ASSEMBLY, Support LH	1	IB
	42E4020-52	. TUBE ASSEMBLY, Support LH	1	IC
	42E4020-9	. TUBE ASSEMBLY, Support aft (2-man seat sta 359.975)	1	AU
-2	22E4020-12	. . FITTING (Used with 22E4020-2 and 42E4020-33)	6	J,AL
	22E4020-12	. . FITTING (Used with 22E4020-3, 42E4020-30, and -34)	4	J,AL
	22E4020-12	. . FITTING (Used with 22E4020-21, -22, 42E4020-9, -31, and -32)	3	J,AL
	22E4020-29	. . FITTING (Used with 42E4020-5, -33, and -54)	6	IE,FM
	22E4020-29	. . FITTING (Used with 42E4020-2, -6, -30, -34, -48, -56, and -57)	4	IE,FM
	22E4020-29	. . FITTING (Used with 42E4020-3, -4, -9, -31, -32, -50, -51, -52, and -53)	3	IE,FM
	22E4020-31R	. . FITTING (Used with 42E4020-55)	7	IF,HQ
	22E4020-31R	. . FITTING (Used with 42E4020-54)	6	IF,HQ
	22E4020-31R	. . FITTING (Used with 42E4020-48, -49, -56, and -57)	4	IF,HQ
	22E4020-31R	. . FITTING (Used with 42E4020-9, -50, -51, -52, and -53)	3	IF,HQ
	42E4144-1	. . FITTING (Used with 42E4020-54)	6	HI
	42E4144-1	. . FITTING (Used with 42E4020-49 and -56)	4	HI
	42E4144-1	. . FITTING (Used with 42E4020-9, -50, and -52)	3	HI
		Attaching Parts		
	AN4-20	. . BOLT	1	
	AN364-428	. . NUT	1	

Figure and Index Number	Part Number	Description 1 2 3 4 5 6 7	Units per Assembly	Usable On Code
89-	AN960C416	. . WASHER	1	
	AN960C416L	. . WASHER	1	
	AN960D416L	. . WASHER	2	
		*—		
	22E4020-14	. . RING, Round (used with 22E4020-2, 42E4020-5, and -55)	6	J,IE
	22E4020-14	. . RING, Round (used with 22E4020-3, 42E4020-2, -6, -48, and -57)	4	J,IE
	22E4020-14	. . RING, Round (used with 22E4020-21, -22, 42E4020-3, -4, -51, and -53)	3	J,IE
	22E4020-30R	. . RING (Used with 42E4020-55)	6	IF
	22E4020-30R	. . RING (Used with 42E4020-48 and -57)	4	IF
	22E4020-30R	. . RING (Used with 42E4020-51 and -53)	3	IF
-3	22E4020-9	. TUBE, Upper RH	1	J
	22E4020-20	. TUBE ASSEMBLY, Upper RH	1	J
	42E4020-37	. TUBE ASSEMBLY, Upper RH	1	AU
	42E4020-41	. TUBE ASSEMBLY, Upper RH	1	AU
	22E4020-10	. TUBE, Upper LH	1	J
	22E4020-20	. TUBE ASSEMBLY, Upper LH	1	J
	42E4020-7	. TUBE ASSEMBLY, Upper LH	1	AU
	42E4020-8	. TUBE ASSEMBLY, Upper LH	1	AU
	42E4020-40	. TUBE ASSEMBLY, Upper aft (2-man seat sta 359.975)	1	AU
	48133	. BUTTON, Plug (UC)	4	J
	48133	. BUTTON, Plug (UC)	8	AU
	51167	. BUTTON, Plug (UC)	3	J
-4	22E4020-6	. BOLT ASSEMBLY	1	J,D
		Attaching Parts		
	AN364-428	. . NUT	1	
	AN960D416	. WASHER	1	
	AN960D416L	. WASHER	1	
		*—		
-5	ACA1382	. SEAT, 2-man troop (ORO)	1	J
	ACA1142-12	. SEAT, 2-man troop (ORO)	1	AU
	or			
	5200-H21	. SEAT, 2-man troop (Mercury Aircraft Products, Inc, Fairmount, W Va)	1	AU
-6	ACA1383	. SEAT, 3-man troop (ORO)	4	J
	ACA1143-12	. SEAT, 3-man troop (ORO)	6	AU
	or			
	5300-H21	. SEAT, 3-man troop (Mercury Aircraft Products, Inc, Fairmount, W Va)	6	AU
-7	49F6550-1	. BELT, Type C-3 safety (ACB) (GFAE)	8	J
	49F6550-1	. BELT, Type C-3 safety (ACB) (GFAE)	20	HJ
	FDC-1650-27	. BELT ASSEMBLY, Seat (DAPI)	20	HI
-8	49D7079	. HARNESS, Type D-2 shoulder (AHT) (GFAE)	8	J
	49D7079	. HARNESS, Type D-2 shoulder (AHT) (GFAE)	18	AU
	50D3772	. HARNESS, Type G-3 shoulder (AHT) (GFAE)	2	ED,EH
	53D20961	. HARNESS, Type MB-2 shoulder (AHT) (GFAE)	2	EG
	42E4082-1	. ADAPTER, Troop seat leg	20	AU
	22E4030-2	LITTER INSTALLATION	1	A
	22E4030-3	LITTER INSTALLATION	1	E
	42E4030-1	LITTER INSTALLATION	1	AU
-9	WB10249	. STRAP ASSEMBLY (BGDA)	8	J,HJ
	or			
	B1320-2	. STRAP ASSEMBLY (General Logistics, Pasadena, Calif)	8	HJ
	or			
	AT900-90-1	. STRAP ASSEMBLY (DAA)	8	HJ
	B1320-4	. STRAP ASSEMBLY (General Logistics, Pasadena, Calif)	8	HI
	or			
	AT900-90-2	. STRAP ASSEMBLY (DAA)	8	HI
	44D9467	. CONTAINER ASSEMBLY (USAF dwg No.)	8	J,HJ
	42E6065-10	. CONTAINER ASSEMBLY	8	HI
-10	18E4010-2	. STRAP ASSEMBLY	8	J
-11	7-837-810	LITTER, Stokes metal (Army Medical Dept) (to be furnished by Tactical Organization)	AR	J

Figure and Index Number	Part Number	1 2 3 4 5 6 7 Description	Units per Assembly	Usable On Code
89-12	7-837-205	LITTER, Aluminum pole folding (Army Medical Dept) (to be furnished by Tactical Organization)	AR	
	22S4012-1	SUPPORTS INSTALLATION, Litter	1	J
	42S4012-1	SUPPORTS INSTALLATION, Litter	1	AV
	42S4012-2	SUPPORTS INSTALLATION, Litter	1	I
	22S4012-2	. SUPPORTS INSTALLATION, Litter RH	1	J
	22S4089-1	. SUPPORTS INSTALLATION, Litter LH	1	J
-13	43B2330	. . BRACKET ASSEMBLY (USAF dwg No.)	12	J
	WB10265	. . BRACKET ASSEMBLY (BGDA)	12	J
	22S4087-1	. . FITTING, Litter strap support	4	J
	WB10265	. BRACKET ASSEMBLY (BGDA)	24	HJ
	or			
	B1328-2	. LITTER SUPPORT, Outboard (General Logistics, Pasadena, Calif)	24	HJ
	B1328-4	. LITTER SUPPORT, Outboard (General Logistics, Pasadena, Calif)	24	HI
	22S4087-2	. FITTING, Litter strap support	8	AU

Equipment

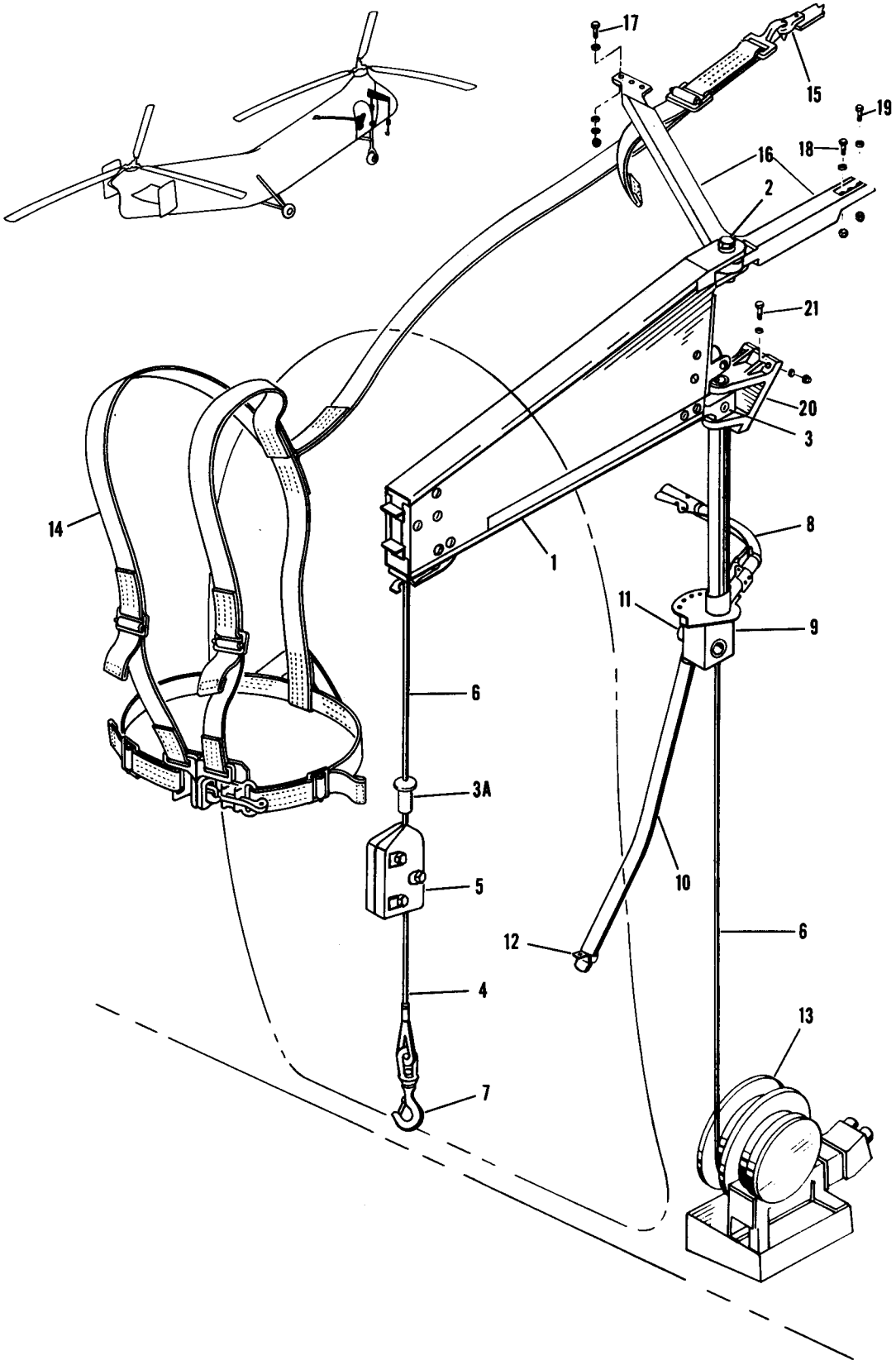

Figure 90. Rescue Hoist

Figure and Index Number	Part Number	Description 1 2 3 4 5 6 7	Units per Assembly	Usable On Code
90-	22E6001-1	HOIST INSTALLATION, Rescue	1	A
	22E6001-2	HOIST INSTALLATION, Rescue	1	E
	42E6001-3	HOIST INSTALLATION, Rescue	1	AU
	42E6001-2	HOIST INSTALLATION, Rescue (kit)	1	CX
	42E6001-4	HOIST INSTALLATION, Rescue (kit)	1	AO,DA
	42E6001-5	HOIST INSTALLATION, Rescue (kit)	1	JT
	42E6001-8	HOIST INSTALLATION, Rescue (kit)	1	JU
-1	22E6030-34	. BOOM ASSEMBLY	1	A
	22E6030-1	. BOOM ASSEMBLY	1	AV
		Attaching Parts		
-2	AN26-29	. BOLT	1	J
	AN396-49	. PIN, Flat hd	1	AU
	AN381-3-16	. PIN, Cotter	1	J
	AN320-6	. NUT	1	J
	AN415-2	. PIN, Lock	1	AU
	AN960D616L	. WASHER	1	
	AN960D616	. WASHER	1	
-3	AN397-69	. PIN, Flat hd	1	J
	AN386-5-16A	. PIN, Taper	1	AU
	AN415-2	. PIN, Lock	1	J
	AN364-624	. NUT	1	AU
	AN960D616L	. WASHER	1	
	AN960D616	. WASHER	1	
		————*————		
	22E6030-11	. . TRIGGER	1	A
	22E6030-33	. . TRIGGER	1	B
	22E6072-1	. RAINSHIELD ASSEMBLY	1	B
	or			
	22E6001-3	. RAINSHIELD ASSEMBLY	1	B
	22E6001-4	. PLATE, Cover	1	B
	22E6010-1	. CABLE AND HOOK ASSEMBLY	1	J,CX
	22E6010-21	. CABLE AND HOOK ASSEMBLY	1	AO,DA
	22E6010-22	. CABLE AND HOOK ASSEMBLY	1	I
-3A	42E6062-1	. . QUICK DISCONNECT	1	J,CX
	RA-2258-4	. . QUICK DISCONNCET (ACA)	1	D,EY
-4	22E6010-2	. . CABLE ASSEMBLY	1	
-5	22E6057-5	. . WEIGHT ASSEMBLY, LH	1	
	22E6057-2	. . WEIGHT ASSEMBLY, RH	1	
-6	22E6010-10	. . CABLE ASSEMBLY	1	J,CX
	22E6010-20	. . CABLE ASSEMBLY	1	D,EY
-7	22E6010-4	. . HOOK ASSEMBLY	1	
	2722-2	. . . HOOK, Swivel safety (LAT)	1	
	or			
	3103	. . . HOOK, Swivel safety (RAPT)	1	
	22E6050-1	. HANDLE INSTALLATION	1	J
	42E6050-4	. HANDLE INSTALLATION	1	AV
	42E6050-6	. BOOM AND HANDLE INSTALLATION, Rescue hoist	1	GG,JV
	42E6050-8	. BOOM AND HANDLE INSTALLATION, Rescue hoist	1	EH,JW
	22E6061-1	. . BOOM ASSEMBLY	1	I
	or			
	22E6030-39	. . BOOM ASSEMBLY	1	I
-8	22E6050-2	. . HANDLE ASSEMBLY	1	J
	42E6050-2	. . HANDLE ASSEMBLY	1	AV
	42E6050-7	. . HANDLE ASSEMBLY	1	GG,JV
	42E6050-9	. . HANDLE ASSEMBLY	1	EH,JW
	22E6052-6	. . SECTOR ASSEMBLY	1	
-9	22E6036-1	. CUTTER INSTALLATION, Cable	1	
-10	22E6036-2	. . HANDLE ASSEMBLY	1	
	22E6037-1	. . BLOCK	1	
	22E6038-1	. . KNIFE	1	
-11	42E6068-1	. . SWITCH ASSEMBLY, Down-limit	1	E,JX
	JV-5	. . . ACTUATOR (MCS)	1	E,JX
	AN3234-1	. . . SWITCH, Micro	1	E,JX
-12	22E6036-5	. . CLAMP	1	
	22E6032-1	. WINCH AND CABLE ATTACHMENT	1	J

Figure and Index Number	Part Number	Description 1 2 3 4 5 6 7	Units per Assembly	Usable On Code
90-	42E7071-2	. WINCH INSTALLATION	1	AV,JT
	42E7071-4	. WINCH INSTALLATION	1	JU
	42E7071-1	. COUPLING INSTALLATION	1	AU
-13	AA-40000	. . WINCH (VI)	1	
		Attaching Parts		
	AN4-7A	. . BOLT	4	
	AN970D416L	. . WASHER	4	
		———*———		
	22E6032-3	. . WASHER, Cable attachment	2	
	22E6032-4	. . BOLT, Cable attachment	1	
	22E6032-5	. . WASHER, Cable attachment	1	
	AN365-624	. . NUT	1	
	TB155-S4-8D	. . COUPLING HALF (AQ)	2	AU
	T150-S1-8D	. . COUPLING HALF (AQ)	2	AU
	C-155-25-8D	. . NUT (AQ)	2	AU
	22E6035-1	. BELT INSTALLATION, Hoist operator's safety	1	A
	22E6035-7	. HARNESS INSTALLATION, Cargo and hoist operator's safety	1	E
	22E6035-8	. HARNESS INSTALLATION, Cargo and hoist operator's safety	1	AU
	AN7508-1A	. . BELT, Gunner's safety (GFAE)	1	A
	22E6040-1	. . CABLE ASSEMBLY, Safety belt	1	A
-14	51J3817	. . HARNESS ASSEMBLY (GFAE)	1	B
		Attaching Parts		
-15	AN115-32	. . SHACKLE	1	
	AN24-12A	. . BOLT	1	
	AN364-428	. . NUT	1	
	AN960-416	. . WASHER	1	
		———*———		
-16	22S4052-1	. FITTING ASSEMBLY, Upper	1	J
	42S4052-1	. FITTING ASSEMBLY, Upper (kit)	1	AU
	or			
	22S4052-3	. FITTING ASSEMBLY, Upper (kit)	1	AU
		Attaching Parts		
-17	AN3-10A	. BOLT	3	
	AN365-1032	. NUT	3	
	AN960D10	. WASHER (Used under nut)	6	
	AN960D10L	. WASHER (Used under head)	3	
-18	AN3-10A	. BOLT	1	
-19	AN3-6A	. BOLT	2	
	AN960D10	. WASHER	3	
		———*———		
-20	22S4051-1	. FITTING ASSEMBLY, Lower	1	J,AV
	or			
	22S4051-101	. FITTING ASSEMBLY, Lower	1	J,AV
	22S4051-201	. FITTING ASSEMBLY, Lower	1	AW,AM
		Attaching Parts		
-21	AN4-12A	. BOLT	4	
	AN365-428	. NUT	4	
	AN960D416L	. WASHER	8	
		———*———		

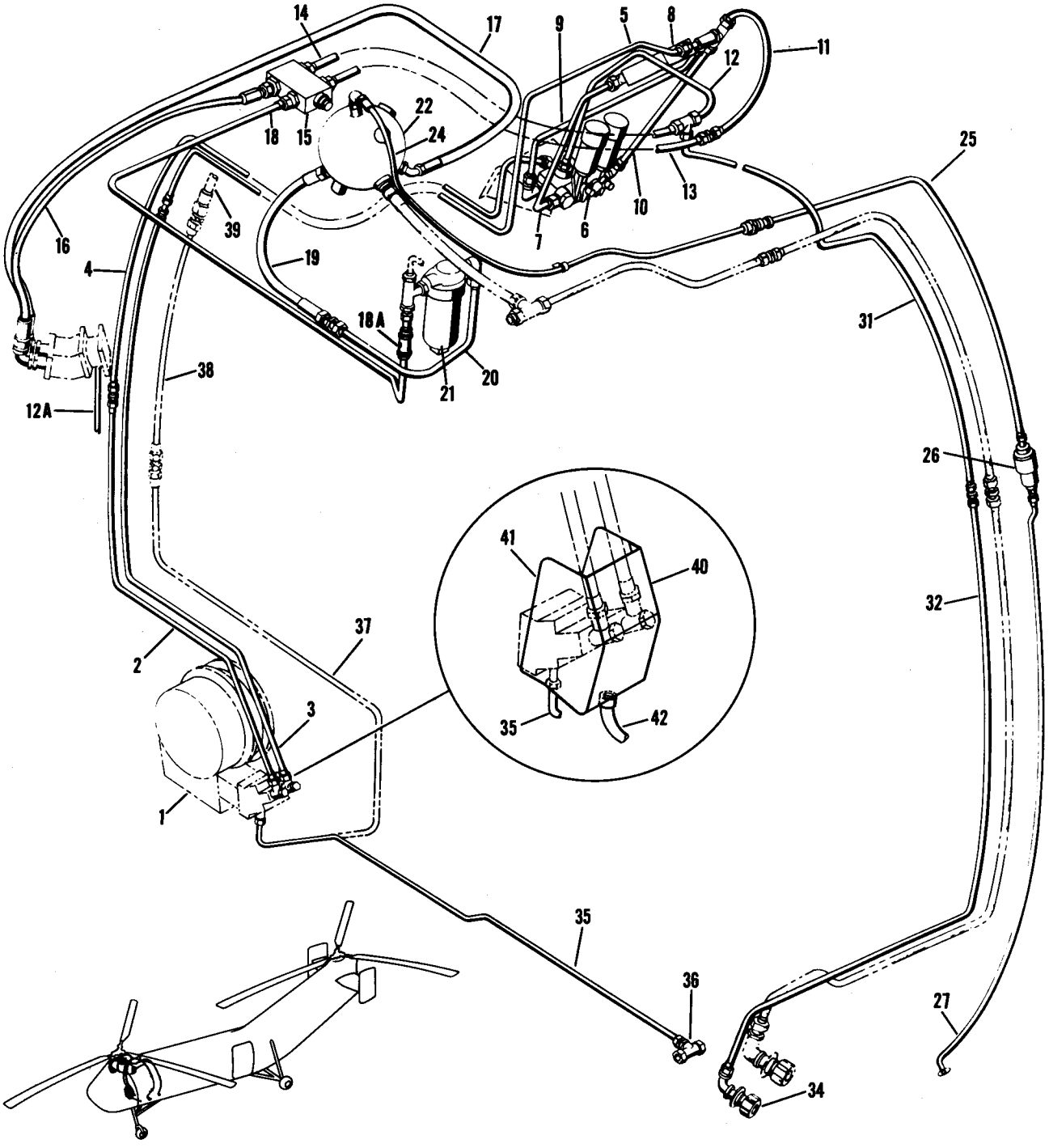

Figure 91. Hydraulic Rescue Hoist System

Figure and Index Number	Part Number	Description 1 2 3 4 5 6 7	Units per Assembly	Usable On Code
91-1	22E6001-1	HOIST INSTALLATION, Rescue, see fig. 90	Ref	A
	22E6001-2	HOIST INSTALLATION, Rescue, see fig. 90	Ref	E
	42E6001-2	HOIST INSTALLATION, Rescue (kit), see fig. 90	Ref	AU
	42E6001-3	HOIST INSTALLATION, Rescue, see fig. 90	Ref	AU
	22E7001-80	CONTROLS SYSTEM INSTALLATION, Hydraulic	1	J
	42E7001-1	CONTROLS SYSTEM INSTALLATION, Hydraulic	1	AK,CU
■	42E7001-150	CONTROLS SYSTEM INSTALLATION, Hydraulic	1	IJ
	42E7001-151	CONTROLS SYSTEM INSTALLATION, Hydraulic	1	EB
■	43E7001-1	CONTROLS SYSTEM INSTALLATION, Hydraulic	1	HI
-2	22E7001-62	. TUBE ASSEMBLY	1	J
	42E7001-3	. TUBE ASSEMBLY	1	AK,CU
	42E7001-93	. TUBE ASSEMBLY	1	AM,CV
-3	22E7001-63	. TUBE ASSEMBLY	1	J
	42E7001-2	. TUBE ASSEMBLY	1	AK,CU
	42E7001-91	. TUBE ASSEMBLY	1	AM,CV
	AN815-8D	. UNION	2	
-4	22E7001-17	. TUBE ASSEMBLY	1	J
	42E7001-71	. TUBE ASSEMBLY	1	AK,CU
	42E7001-97	. TUBE ASSEMBLY	1	AM,CV
-5	22E7001-18	. TUBE ASSEMBLY	1	J
	42E7001-70	. TUBE ASSEMBLY	1	AK,CU
	42E7001-95	. TUBE ASSEMBLY	1	AM,CV
	22E6020-1	. VALVE INSTALLATION	1	J
	22E6020-18	. VALVE INSTALLATION	1	AK,CU
	22E6020-22	. VALVE INSTALLATION	1	AM,CV
-6	AA40101A	. . VALVE, 4-way (VI)	1	
	or			
	AA40101	. . VALVE, 4-way (VI)	1	
	AN776-8D	. . FITTING, Universal	2	
	AN775-8	. . BOLT	2	
	AN901-8A	. . GASKET	4	
-7	22E6020-7	. . TUBE ASSEMBLY, Pressure	1	
	AN833-8D	. . ELBOW	1	
	AN6289D8	. . NUT	1	
	AN6291-8	. . RING	1	
	AN6290-8	. . GASKET	1	
■ -8	AA40301	. . VALVE, 2-speed (VI)	1	
	or			
	AA40300	. . VALVE, 2-speed (VI)	1	
	AN833-8D	. . ELBOW	1	
	AN6289D8	. . NUT	1	
	AN6291-8	. . RING	1	
	AN6290-8	. . GASKET	1	
	22E6020-2	. . ELBOW	1	J
	22E6020-19	. . TEE	1	AU
	AN6289D8	. . NUT	1	
	AN6291-8	. . RING	1	
	AN6290-8	. . GASKET	1	
-9	22E6020-6	. . TUBE ASSEMBLY, Return	1	
	AN784D8	. . TEE	1	
	AN6289D8	. . NUT	1	
	AN6291-8	. . RING	1	
	AN6290-8	. . GASKET	1	
	22E6020-2	. . ELBOW	1	
	AN6289D8	. . NUT	1	
	AN6291-8	. . RING	1	
	AN6290-8	. . GASKET	1	
-10	22E6020-9	. . TUBE ASSEMBLY, Return	1	
	AN834-8D	. . TEE	1	
	AN6289D8	. . NUT	1	
	AN6291-8	. . RING	1	
	AN6290-8	. . GASKET	1	
■ -11	22E6020-4	. . TUBE ASSEMBLY, Return	1	J,HJ
-12	22E6020-20	. . TUBE ASSEMBLY, Pressure (used with 22E6020-22)	1	

Figure and Index Number	Part Number	Description 1 2 3 4 5 6 7	Units per Assembly	Usable On Code
91-	22E6020-3	. . TUBE ASSEMBLY, Pressure (used with 22E6020-1 and -18)	1	
	AN837-8D	. . ELBOW (Used with 22E6020-20)	1	
	AN6289D8	. . NUT (Used with 22E6020-20)	1	
	AN6291-8	. . RING (Used with 22E6020-20)	1	
	AN815-8D	. . UNION (Used with 22E6020-3)	1	
	AN6290-8	. . GASKET (Used with 22E6020-3 and -20)	1	
	22E7002-25	. EQUIPMENT INSTALLATION, Fwd transmission area hydraulic ...	1	A
	22E7002-26	. EQUIPMENT INSTALLATION, Fwd transmission area hydraulic ...	1	E
	22E7002-2	. EQUIPMENT INSTALLATION, Fwd transmission area hydraulic ...	1	IH
	42E7002-1	. EQUIPMENT INSTALLATION, Fwd transmission area hydraulic ...	1	II
-12A	42E7001-77	. . TUBE ASSEMBLY	1	HI
	AN832-8D	. . UNION	1	
	AN804D8	. . TEE	1	
	AN924-8D	. . NUT	2	
-13	22E7002-8	. . TUBE ASSEMBLY	1	
-14	22E7002-9	. . TUBE ASSEMBLY	1	
	AN837-8D	. . ELBOW	2	
	AN6289D8	. . NUT	2	
	AN6291-8	. . RING	2	
	AN6290-8	. . GASKET	2	
-15	AN6200-8AB	. . VALVE, Relief	1	
	AN815-8D	. . UNION	2	
	AN6290-8	. . GASKET	2	
-16	AN6271-8-35¾	. . HOSE ASSEMBLY	1	
	MS28741-8-0356	. . HOSE ASSEMBLY	1	II
	AN777-8D	. . FITTING, Universal	1	
	AN775-8D	. . BOLT	1	
	AN901-8A	. . GASKET	2	
-17	AN6271-12-61¼	. . HOSE ASSEMBLY	1	
	AN832-8D	. . UNION	1	
	AN6290-8	. . GASKET	3	
	AN927-8D	. . ELBOW	1	J,IH
	AN939D8	. . ELBOW	1	II
	AN6291-8	. . RING	1	
	AN6289D8	. . NUT	1	
	AN919-19D	. . REDUCER	1	
-18	22E7002-23	. . TUBE ASSEMBLY	1	J
	22E7002-27	. . TUBE ASSEMBLY	1	J,IH
	22E7002-29	. . TUBE ASSEMBLY	1	J,IH
	42E7002-7	. . TUBE ASSEMBLY	1	II
	AN815-8D	. . UNION	1	J,IH
-18A	AN6207-8	. . VALVE, Check	1	
	AN6290-8	. . GASKET	1	
	AN6290-12	. . GASKET	1	
	AN893-16D	. . BUSHING	1	
	AN926-12D	. . TEE	1	J,IH
	AN804D8	. . TEE	1	II
	AN919-18D	. . REDUCER	1	J,IH
	AN6290-12	. . GASKET	1	
	AN6289D8	. . NUT	1	II
	AN6291-8	. . RING	1	II
-19	AN6271-12-17¾	. . HOSE ASSEMBLY	1	J,IH
	MS28741-12-0080	. . HOSE ASSEMBLY	1	II
	AN919-19D	. . REDUCER	1	J,IH
	AN6290-8	. . GASKET	1	J,IH
	AN815-12D	. . UNION	1	J,IH
	AN894D12-8	. . BUSHING	1	II
	AN837-12D	. . ELBOW	1	II
	AN6289D12	. . NUT	1	II
	AN6290-12	. . GASKET	1	II
	AN6291-8	. . RING	1	II
	AN6290-8	. . GASKET	1	II

Figure and Index Number	Part Number	1 2 3 4 5 6 7 Description	Units per Assembly	Usable On Code
91-20	22E7002-21	. . TUBE ASSEMBLY	1	J,IH
	42E7002-5	. . TUBE ASSEMBLY	1	II
	AN833-12D	. . ELBOW	1	
	AN6289D12	. . NUT	1	
	AN6291-12	. . RING	1	
	AN6290-12	. . GASKET	1	
-21	AN6234-4	. . FILTER	1	
		Attaching Parts		
	AN24-48A	. . BOLT	2	
	AN365-428	. . NUT	2	
	AN960D416	. . WASHER	2	
	AN960D416L	. . WASHER	2	
	AN23-8A	. . BOLT	1	II
	AN364-1032	. . NUT	1	II
	AN960D10	. . WASHER	1	II
	AN960D10L	. . WASHER	1	II
		———*———		
	MS21919DG35	. . CLAMP	1	II
-22	3001-2	. . RESERVOIR (BAAP)	1	
		Attaching Parts		
	AN23-32A	. . BOLT	4	
	AN23-29A	. . BOLT	4	DU
	AN365-1032	. . NUT	4	
	AN960D10	. . WASHER	4	
	AN960D10L	. . WASHER	4	
		———*———		
	18C1434-1	. . CLAMP	4	J,EM
	18C1434-1	. . CLAMP	2	EI,EH
	18C1434-3	. . CLAMP	1	EI,EH
	18C1434-4	. . CLAMP	1	EI,EH
	22E7051-1	. . YOKE ASSEMBLY, Reservoir support	1	J,AL
	22E7051-8	. . YOKE ASSEMBLY, Reservoir support	1	EM,FM
	22E7051-10	. . YOKE ASSEMBLY, Reservoir support	1	EI,EH
		Attaching Parts		
	AN4-5A	. . BOLT (Used with 22E7051-1 and -8)	4	
	AN365-428	. . NUT (Used with 22E7051-1 and -8)	4	
	AN960D416	. . WASHER (Used with 22E7051-1 and -8)	8	
		———*———		
	AN837-12D	. . ELBOW	1	
	AN6289D12	. . NUT	1	
	AN6291-12	. . RING	1	
	AN6290-12	. . GASKET	1	
-23	Deleted			
-24	AN6270-4-29	. . HOSE ASSEMBLY	1	J
	AN6270-4-41½	. . HOSE ASSEMBLY	1	AU
	AN832-4D	. . UNION	1	J
	AN924-4D	. . NUT	1	J
	AN960D6L	. . WASHER	1	J
-25	22E7001-82	. TUBE ASSEMBLY	1	J
	AN919-6D	. REDUCER	2	
	AN6290-6	. GASKET	2	
-26	AN6240-1	. FILTER	1	
-27	22E7001-81	. TUBE ASSEMBLY	1	
-28	Deleted			
-29	Deleted			
-30	Deleted			
-31	22E7001-93	. TUBE ASSEMBLY	1	J
	42E7001-57	. TUBE ASSEMBLY	1	AK,CU
	42E7001-117	. TUBE ASSEMBLY	1	CV,AM
	AN815-8D	. UNION	1	
-32	22E7001-92	. TUBE ASSEMBLY	1	J

Figure and Index Number	Part Number	1 2 3 4 5 6 7 Description	Units per Assembly	Usable On Code
91-	42E7001-8	. TUBE ASSEMBLY	1	AK,CU
	42E7001-105	. TUBE ASSEMBLY	1	CV,AM
	AN815-8D	. UNION	1	
	AN6290-8	. GASKET	1	
	22E7007-1	. OUTLET INSTALLATION, Hydraulic test	1	J
	42E7007-1	. OUTLET INSTALLATION, Hydraulic test	1	AU
-33	Deleted			
■ -34	TB155-S4-8D	. . COUPLING HALF (AQ)	1	
	155-S6-8	. . CAP, Dust (AQ)	1	
	AN927-8D	. . ELBOW	1	
	AN6289D8	. . NUT	1	
	AN6291-8	. . RING	1	
	AN6290-8	. . GASKET	1	
-35	22E7001-107	. TUBE ASSEMBLY	1	J
	AN832-4D	. UNION	1	J
	AN6290-4	. GASKET	1	J
-36	AN783D6	. TEE, See fig. 92	Ref	J
	AN919-6D	. REDUCER	1	J
	AN6290-6	. GASKET	1	J
■	TB155-S2-4D	. COUPLING HALF (At winch) (AQ)	1	AU
-37	42E7001-72	. TUBE ASSEMBLY	1	AK,CU
	42E7001-99	. TUBE ASSEMBLY	1	AM,CV
	AN821-4D	. ELBOW	1	AM,CV
	42E7001-133	. TUBE ASSEMBLY	1	IM
	42E7001-163	. TUBE ASSEMBLY	1	IN
	AN815-4D	. UNION	1	AU
-38	42E7001-25	. TUBE ASSEMBLY	1	AK,CU
	42E7001-121	. TUBE ASSEMBLY	1	AM,CV
	AN919-10D	. REDUCER	1	AU
-39	42E7001-59	. TUBE ASSEMBLY	1	AK,CU
	42E7001-119	. TUBE ASSEMBLY	1	AM,CV
	22E6060-1	. GUARD INSTALLATION, Hoist winch	1	J
-40	22E6060-3	. . COVER ASSEMBLY	1	J
		Attaching Parts		
	AN530-8R6	. . SCREW	2	J
	AN960D8L	. . WASHER	2	J
		———*———		
-41	22E6060-2	. . GUARD ASSEMBLY	1	J
-42	22E6060-7	. . HOSE	1	J

Equipment

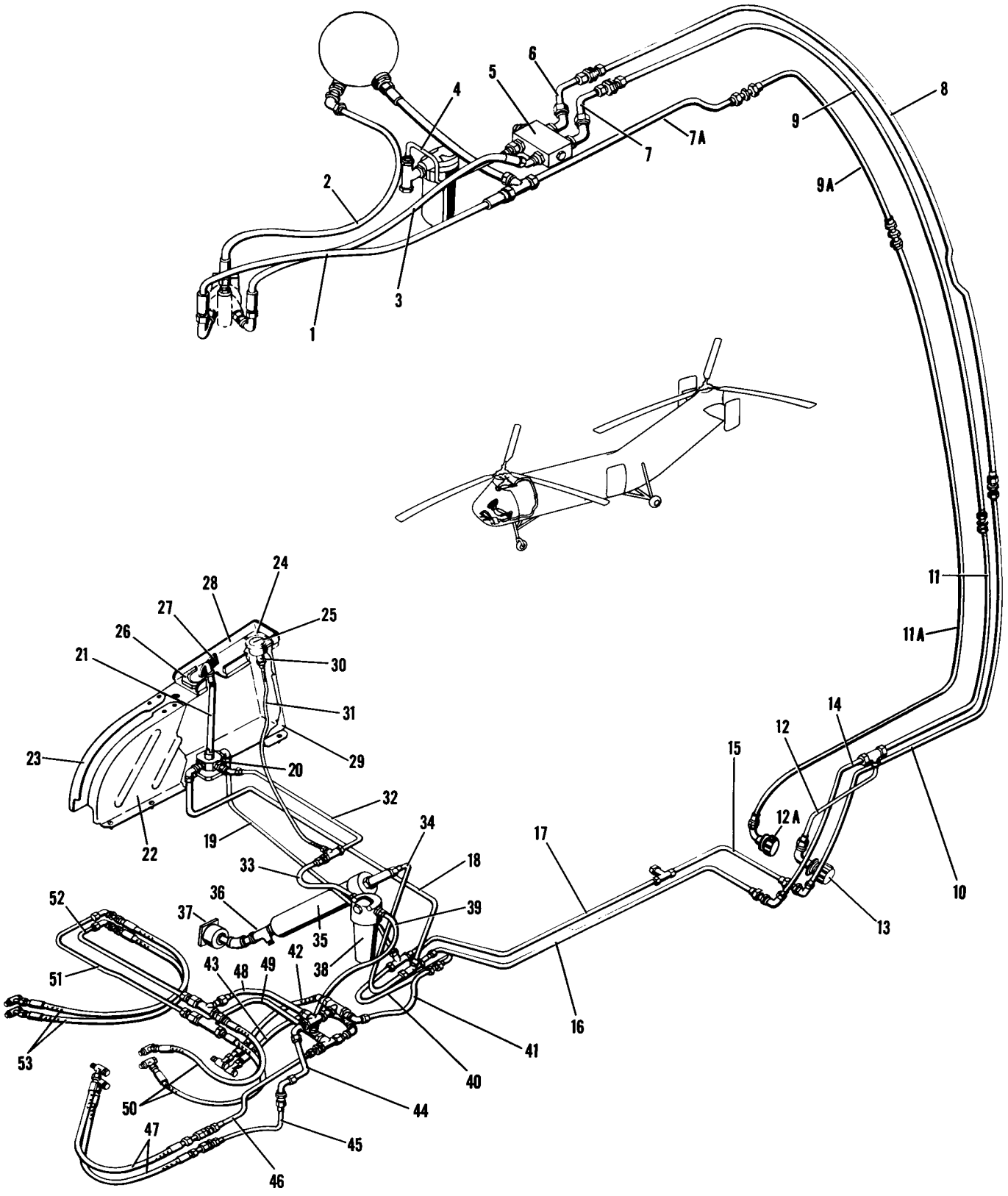

Figure 92. Hydraulic Controls, YH-21 and H-21A

Figure and Index Number	Part Number	Description 1 2 3 4 5 6 7	Units per Assembly	Usable On Code
92-	22E7001-80	CONTROLS SYSTEMS INSTALLATION, Hydraulic, see fig. 91	Ref	
	22E7002-25	. HYDRAULIC SYSTEM, Fwd transmission area, see fig. 91	Ref	
	22E7002-26	. HYDRAULIC SYSTEM, Fwd transmission area, see fig. 91	Ref	
	AN833-12D	. . ELBOW	1	
	AN6289D12	. . NUT	1	
	AN6291-12	. . RING	1	
	AN6290-12	. . GASKET	1	
-1	AN6271-12-33	. . HOSE ASSEMBLY	1	
	AN815-6D	. . UNION	1	
	AN6290-6	. . GASKET	1	
-2	AN6271-6-37	. . HOSE ASSEMBLY	1	
	AN939D8	. . ELBOW	1	
	AN919-12D	. . REDUCER	1	
	AN6290-8	. . GASKET	1	
	AN833-6D	. . ELBOW	1	
	AN6289D6	. . NUT	1	
	AN6291-6	. . RING	1	
	AN893-12D	. . BUSHING	1	
	AN6290-6	. . GASKET	1	
	AN6290-8	. . GASKET	1	
-3	AN6271-6-38½	. . HOSE ASSEMBLY	1	
	AN837-6D	. . ELBOW	1	
	AN6289D6	. . NUT	1	
	AN6291-6	. . RING	1	
	AN6290-6	. . GASKET	1	
-4	22E7002-5	. . TUBE ASSEMBLY	1	
	AN815-6D	. . UNION	1	
	AN6290-6	. . GASKET	1	
-4A	AN6271-12-8¾	. . HOSE ASSEMBLY	1	
	AN832-8D	. . UNION	1	
	AN824-12D	. . TEE	1	
	AN6291-8D	. . NUT	1	
	AN6291-8	. . RING	1	
	AN6290-8	. . GASKET	2	
-5	AN6200-6AB	. . VALVE, Relief	1	
		Attaching Parts		
	AN23-21A	. . BOLT	3	
	AN365-1032	. . NUT	3	
	NAS43DD3-44	. . SPACER	3	
	AN960D10	. . WASHER	3	
	AN960D10L	. . WASHER	3	
		————*————		
	AN837-6D	. . ELBOW	2	
	AN6289D6	. . NUT	2	
	AN6291-6	. . RING	2	
	AN6290-6	. . GASKET	2	
-6	22E7002-3	. . TUBE ASSEMBLY	1	
-7	22E7002-4	. . TUBE ASSEMBLY	1	
	AN832-6D	. . UNION	2	
	AN924-6D	. . NUT	2	
-7A	22E7001-91	. TUBE ASSEMBLY	1	J
	AN815-12D	. UNION	1	
-8	22E7001-86	. TUBE ASSEMBLY	1	J
	AN815-6D	. UNION	1	
-9	22E7001-88	. TUBE ASSEMBLY	1	J
	AN815-6D	. UNION	1	
-9A	22E7001-90	. TUBE ASSEMBLY	1	J
	AN815-12D	. UNION	1	
-10	22E7001-83	. TUBE ASSEMBLY	1	J
-11	22E7001-85	. TUBE ASSEMBLY	1	J
	AN824-6D	. TEE	1	
-11A	22E7001-89	. TUBE ASSEMBLY	1	J

Figure and Index Number	Part Number	Description 1 2 3 4 5 6 7	Units per Assembly	Usable On Code
92-12	22E7001-84	. TUBE ASSEMBLY	1	J
	22E7007-1	. OUTLET INSTALLATION, Hydraulic test, see fig. 91	Ref	
▌ -12A	TA155-S4-12D	. . COUPLING HALF (AQ)	1	
	155-S6-12	. . CAP, Dust (AQ)	1	
	AN927-12D	. . ELBOW	1	
	AN6289D12	. . NUT	1	
	AN6291-12	. . RING	1	
	AN6290-12	. . GASKET	1	
▌ -13	TB155-S4-8D	. . COUPLING HALF (AQ)	1	
	155-S6-8	. . CAP, Dust (AQ)	1	
	AN927-8D	. . ELBOW	1	
	AN6289D8	. . NUT	1	
	AN6291-8	. . RING	1	
	AN6290-8	. . GASKET	1	
-14	22E7001-87	. TUBE ASSEMBLY	1	J
	AN837-6D	. ELBOW	2	J
	AN924-6D	. NUT	2	
	AN960D916	. WASHER	2	
-15	22E7001-6	. TUBE ASSEMBLY	1	J
	AN783D6	. TEE	1	J
-16	22E7001-20	. TUBE ASSEMBLY	1	J
-17	22E7001-58	. TUBE ASSEMBLY	1	J
	AN804D6	. TEE	2	
	AN924-6D	. NUT	2	
	AN960D916	. WASHER	2	
-18	22E7001-12	. TUBE ASSEMBLY	1	J
-19	22E7001-75	. TUBE ASSEMBLY	1	J
	AN833-6D	. ELBOW	2	J
	AN6289D6	. NUT	2	
	AN6291-6	. RING	2	
	AN6290-6	. GASKET	2	
-20	3278-5	. VALVE (WTR)	1	J
		Attaching Parts		
	AN501A10-8	. SCREW	4	J
	AN960D10	. WASHER	4	
	AN995F41	. WIRE, Lock	AR	
		———*———		
	22E7069-1	. ADAPTER, Hydraulic control valve stem	1	
-21	22E7070-1	. TUBE, Hydraulic control valve torque	1	J
	22E7067-6	. SUPPORT INSTALLATION, Hydraulic gage and valve	1	J
	22E7067-7	. . SUPPORT ASSEMBLY, Hydraulic gage and valve	1	J
-22	22E7061-1	. . . COVER, LH	1	J
		Attaching Parts		
	2-0-80	. . . STUD (LFK)	5	
	2-0-140	. . . STUD (LFK)	1	J
	2-0-160	. . . STUD (LFK)	2	J
	GOS-2-93	. . . GROMMET (LFK)	8	
	22E7063-10	. . . SPACER	5	J
		———*———		
-23	22E7062-1	. . . COVER, RH	1	J
		Attaching Parts		
	2-0-80	. . . STUD (LFK)	5	
	2-0-160	. . . STUD (LFK)	2	J
	2-0-180	. . . STUD (LFK)	1	J
	GOS-2-93	. . . GROMMET (LFK)	8	
	22E7063-10	. . . SPACER	5	J
		———*———		
-24	4850-1	. . . FIXTURE, Light (GMC)	1	
		Attaching Parts		
	AN515B6R10	. . . SCREW	2	J
	AN960D6L	. . . WASHER	2	J
		———*———		

Figure and Index Number	Part Number	1 2 3 4 5 6 7 Description	Units per Assembly	Usable On Code
92-25	AW1-⅞CN13	. . . GAGE (UG) (GFAE)	1	
		Attaching Parts		
	AN515B6R10	. . . SCREW	2	J
	AN960D6L	. . . WASHER	2	J
		———*———		
-26	4850-1	. . . FIXTURE, Light (GMC)	1	
		Attaching Parts		
	AN526-632R8	. . . SCREW	2	J
	AN365-632	. . . NUT	2	
	AN960D6	. . . WASHER	2	
	AN960D6L	. . . WASHER	2	
		———*———		
-27	066654	. . . HANDLE (AS)	1	
	22E7065-1	. . . PLATE	1	J
		Attaching Parts		
	AN526-1032R8	. . . SCREW	2	J
	AN365-1032	. . . NUT	2	
	AN960D10	. . . WASHER	2	
	AN960D10L	. . . WASHER	2	
		———*———		
-28	22E7064-1	. . . GUARD	1	
		Attaching Parts		
	AN526-1032R7	. . . SCREW	1	
	AN364-1032	. . . NUT	1	
	AN960D10	. . . WASHER	1	
	AN960D10L	. . . WASHER	1	
		———*———		
	22E7066-1	. . . SHAFT	1	
	AN270B8	. . . JOINT, Universal	1	
		Attaching Parts		
	AN525-832-14	. . . SCREW	1	J
	AN364-832	. . . NUT	1	J
	AN960-8L	. . . WASHER	1	J
		———*———		
-29	22E7063-2	. . . HOUSING ASSEMBLY	1	J
		Attaching Parts		
	2-0-120	. . . STUD (LFK)	2	J
	2-0-160	. . . STUD (LFK)	2	J
	GOS-2-93	. . . GROMMET (LFK)	4	J
		———*———		
-30	11D-2	. SNUBBER (RPS)	1	J
	AN6290-4	. GASKET	1	J
-31	MS28741-4-0300	. HOSE ASSEMBLY	1	J
	AN837-6D	. ELBOW	1	J
	AN6289D6	. NUT	1	J
	AN6291-6	. RING	1	J
	AN6290-6	. GASKET	1	J
-32	22E7001-109	. TUBE ASSEMBLY	1	J
	AN783D6	. TEE	1	J
	AN919-6D	. REDUCER	1	J
	AN6290-6	. GASKET	1	J
-33	22E7001-16	. TUBE ASSEMBLY	1	J
	AN815-6D	. UNION	1	J
	AN6290-6	. GASKET	1	J
-34	22E7001-21	. TUBE ASSEMBLY	1	J
	AN833-6D	. ELBOW	1	J
	AN815-6D	. UNION	1	J
	AN893-12D	. REDUCER	1	J
	AN6289D6	. NUT	1	J
	AN6291-6	. RING	1	J
	AN6290-6	. GASKET	1	J
	AN6290-8	. GASKET	1	J

Figure and Index Number	Part Number	Description 1 2 3 4 5 6 7	Units per Assembly	Usable On Code
92-	22E7003-1	. FILTER AND ACCUMULATOR INSTALLATION, Hydraulic	1	J
-35	548025-5	. . ACCUMULATOR (BX)	1	J
	or			
	548025	. . ACCUMULATOR (BX)	1	J
		Attaching Parts		
	AN4-23A	. . BOLT	4	J
	AN364-428	. . NUT	4	J
	AN960D416	. . WASHER	8	J
		———*———		
	22E7041-1	. . BLOCK Accumulator support	2	J
	22E7044-1	. . CLAMP, Half	2	J
-36	AN6287-1	. . VALVE	1	
	AN6289D4	. . NUT	1	
	AN6291-4	. . RING	1	
	AN6290-4	. . GASKET	1	
	AN6285D1	. . BODY	1	
	AN6285D2	. . BOLT	1	
	47A1562	. . GASKET, "O" ring (USAF dwg No.)	2	
	AN941D4	. . ELBOW	1	J
	AN832-4D	. . UNION	1	J
	AN6289D4	. . NUT	2	J
	AN6291-4	. . RING	2	J
	AN6290-4	. . GASKET	3	J
-37	AN5771-4B	. . GAGE	1	J
-38	AN6234-2	. . FILTER	1	
		Attaching Parts		
	AN24-42A	. . BOLT	2	
	AN364-428	. . NUT	2	
	AN960D416	. . WASHER	2	
	AN960D416L	. . WASHER	2	
		———*———		
	AN815-6D	. UNION	1	J
	AN6290-6	. GASKET	1	
-39	22E7001-9	. TUBE ASSEMBLY	1	J
-40	22E7001-10	. TUBE ASSEMBLY	1	J
	AN832-6D	. UNION	1	J
	AN924-6D	. NUT	1	
	AN960D916	. WASHER	1	
-41	22E7001-11	. TUBE ASSEMBLY	1	J
	22E7005-1	. LINES INSTALLATION, Boost actuator	1	J
	AN784D6	. . TEE	1	
	AN938D6	. . TEE	1	
	AN833-6D	. . ELBOW	1	
	AN837-4D	. . ELBOW	1	J
	AN837-6D	. . ELBOW	1	
	AN6289D4	. . NUT	1	
	AN6289D6	. . NUT	1	
	42E7082-1	. . NUT	1	
	AN893-2D	. . BUSHING	1	
	AN6291-4	. . RING	1	
	AN6291-6	. . RING	1	
	AN960D916L	. . WASHER	1	
	AN6290-4	. . GASKET	1	
	AN6290-6	. . GASKET	1	
-42	AN6271-4-13⅝	. . HOSE ASSEMBLY	1	J
	AN775-4	. . BOLT	1	
	AN776-4D	. . ELBOW	1	
	AN901-4A	. . GASKET	1	
	AN938D6	. . TEE	1	J
	AN804D6	. . TEE	1	J
	AN837-4D	. . ELBOW	1	J
	AN832-6D	. . UNION	1	

Figure and Index Number	Part Number	1 2 3 4 5 6 7 Description	Units per Assembly	Usable On Code
92-	AN6289D4	. . NUT	1	
	AN6289D6	. . NUT	1	
	AN924-6D	. . NUT	1	
	AN893-2D	. . BUSHING	1	J
	AN6291-4	. . RING	1	J
	AN6291-6	. . RING	1	
	AN960D916	. . WASHER	1	
	AN6290-4	. . GASKET	1	J
	AN6290-6	. . GASKET	1	
-43	AN6271-4-17	. . HOSE ASSEMBLY	1	J
	AN775-4	. . BOLT	1	
	AN776-4D	. . ELBOW	1	
	AN901-4A	. . GASKET	1	
-44	22E7005-3	. . TUBE ASSEMBLY	1	
	AN833-6D	. . ELBOW	1	
	AN924-6D	. . NUT	1	J
	AN960D916	. . WASHER	1	J
-45	22E7005-2	. . TUBE ASSEMBLY	1	
-46	22E7005-4	. . TUBE ASSEMBLY	1	J
	AN832-6D	. . UNION	2	
	AN924-6D	. . NUT	2	
	AN894D6-4	. . BUSHING	2	
	PHS15303-9-13D	. . WASHER (PHL)	2	
	AN6290-6	. . GASKET	2	
-47	AN6271-4-16	. . HOSE ASSEMBLY	2	J
	AN775-4	. . BOLT	2	
	AN778-4D	. . ELBOW	2	
	AN901-4A	. . GASKET	2	
-48	22E7005-6	. . TUBE ASSEMBLY	1	J
-49	22E7005-23	. . TUBE ASSEMBLY	1	
	AN784D6	. . TEE	2	
	AN919-6D	. . REDUCER	2	
	AN6289D6	. . NUT	2	
	42E7082-1	. . NUT	2	
	AN960D916L	. . WASHER	2	
	AN894D6-4	. . BUSHING	2	
	AN6291-6	. . RING	2	
	AN6290-6	. . GASKET	2	
-50	AN6271-4-18½	. . HOSE ASSEMBLY	2	
	AN775-4	. . BOLT	2	
	AN776-4D	. . ELBOW	2	
	AN901-4A	. . GASKET	2	
-51	22E7005-7	. . TUBE ASSEMBLY	1	
-52	22E7005-8	. . TUBE ASSEMBLY	1	
	AN833-4D	. . ELBOW	2	
	AN924-4D	. . NUT	2	
	AN960D716	. . WASHER	2	J
-53	AN6271-4-18	. . HOSE ASSEMBLY	2	
	AN775-4	. . BOLT	2	
	AN778-4D	. . ELBOW	2	
	AN901-4A	. . GASKET	2	
	22E7071-3	. . SPRING ASSEMBLY, Flex. hose support tension	1	
		Attaching Parts		
	AN365-1032	. . NUT	2	
	AN960D10	. . WASHER	2	
	AN960-10	. . WASHER	2	
		———*———		
	22E7071-2	. . . SPRING	1	
	AN42-5A	. . . BOLT, Eye	1	
	AN42-13A	. . . BOLT, Eye	1	
	22C1753-84	. . SPACER	1	

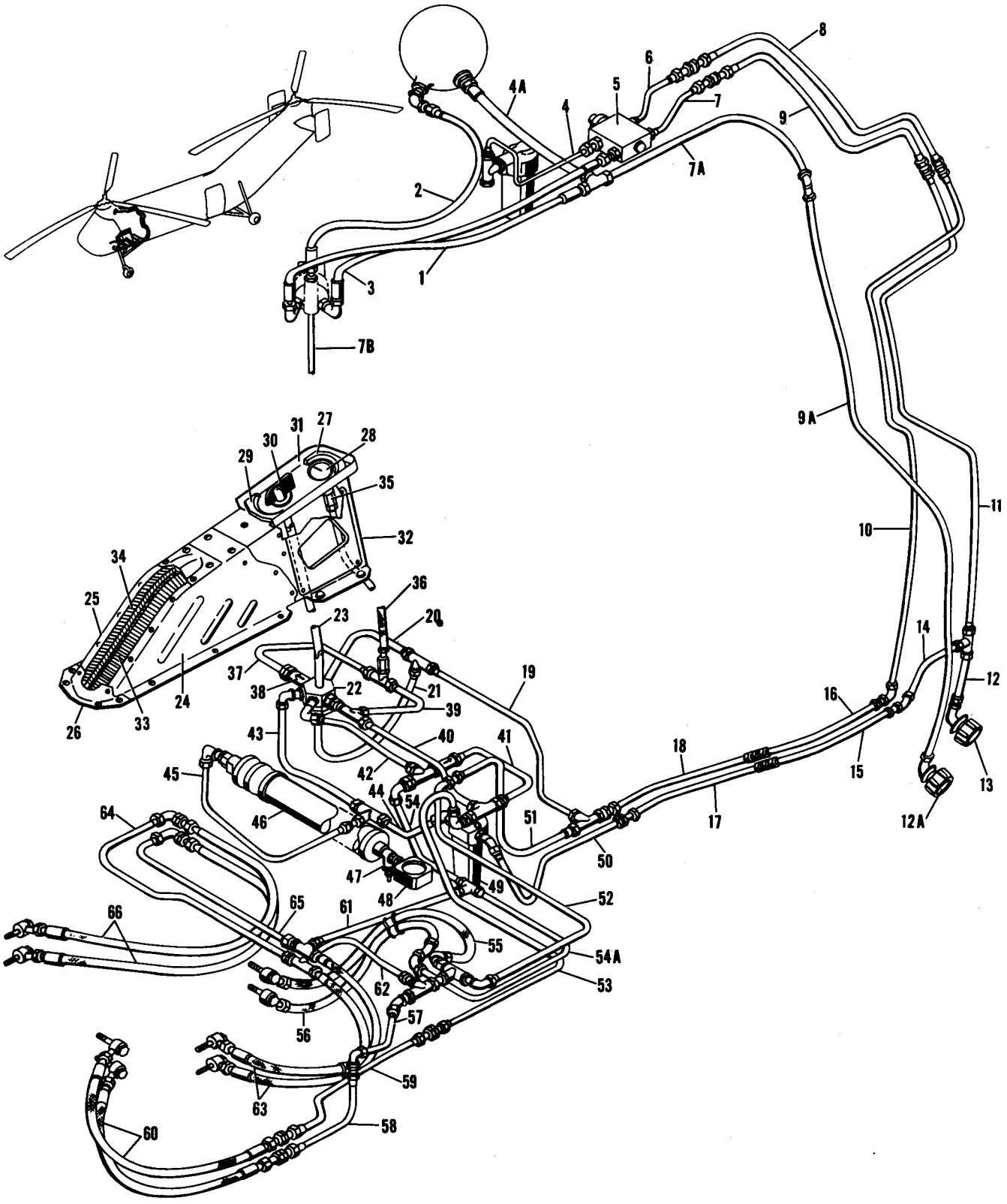

Figure 93. Hydraulic Controls, H-21B 51-15854 thru 51-15880, 52-8665 thru 52-8679, and H-21C (Sheet 1 of 2)

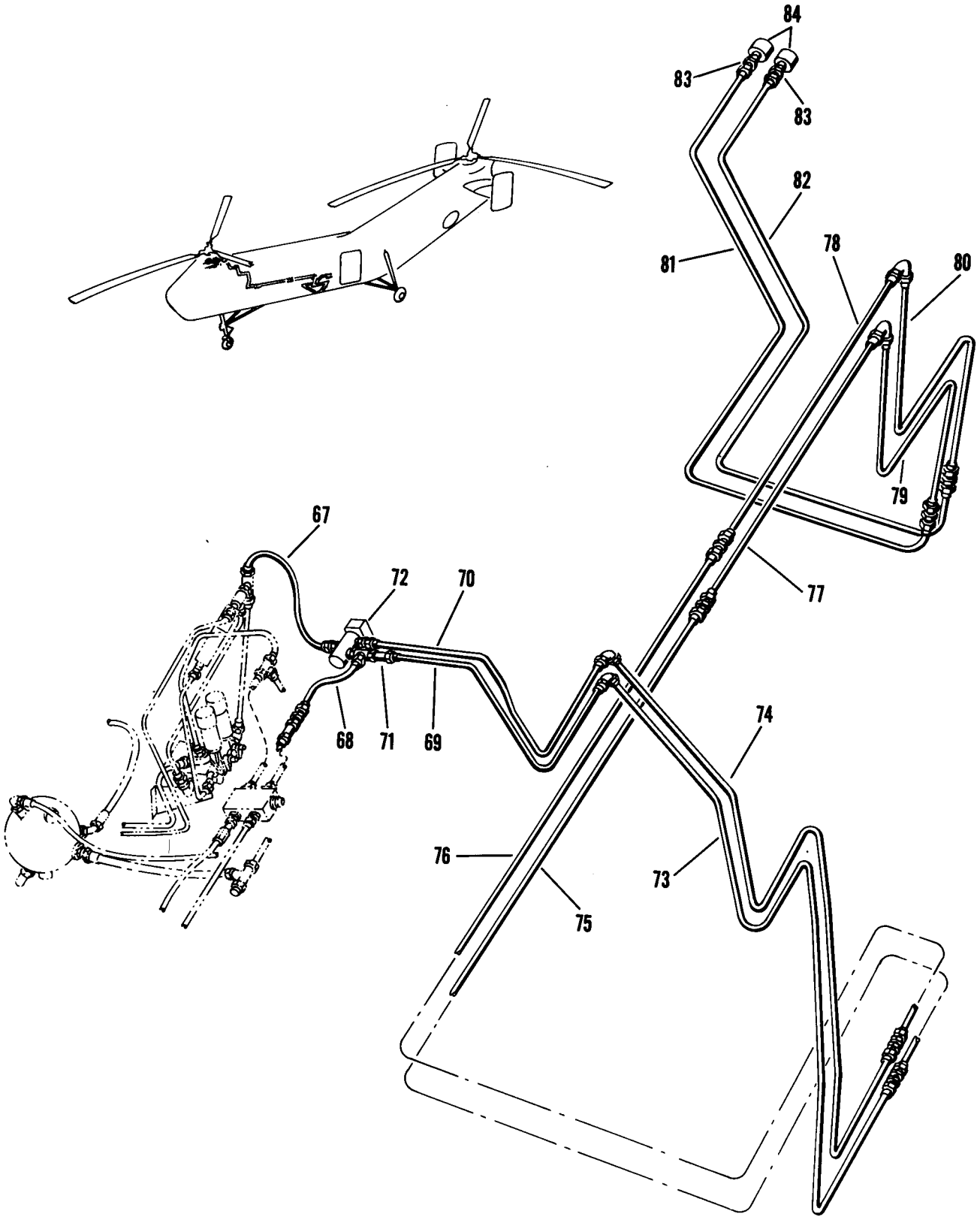

Figure 93. Hydraulic Controls, H-21B 51-15854 thru 51-15880, 52-8665 thru 52-8679, and H-21C (Sheet 2 of 2)

Figure and Index Number	Part Number	Description 1 2 3 4 5 6 7	Units per Assembly	Usable On Code
93-	42E7001-1	CONTROLS SYSTEM INSTALLATION, Hydraulic, see fig. 91*	Ref	
	42E7001-150	CONTROLS SYSTEM INSTALLATION, Hydraulic, see fig. 91*	Ref	
	43E7001-1	CONTROLS SYSTEM INSTALLATION, Hydraulic, see fig. 91*	Ref	
	22E7002-2	. HYDRAULIC SYSTEM, Fwd transmission area, see fig. 91*	Ref	
	42E7002-1	. HYDRAULIC EQUIPMENT INSTALLATION, Fwd transmission area, see fig. 91*	Ref	
	AN833-12D	. . ELBOW	1	
	AN6289D12	. . NUT	1	
	AN6291-12	. . RING	1	
	AN6290-12	. . GASKET	1	
-1	AN6271-12-33	. . HOSE ASSEMBLY	1	
	AN815-6D	. . UNION	1	
	AN6290-6	. . GASKET	1	
-2	AN6271-6-37	. . HOSE ASSEMBLY	1	
	AN939D8	. . ELBOW	1	
	AN919-12D	. . REDUCER	1	
	AN6290-8	. . GASKET	1	
	AN833-6D	. . ELBOW	1	
	AN6289D6	. . NUT	1	
	AN6291-6	. . RING	1	
	AN893-12D	. . BUSHING	1	
	AN6290-6	. . GASKET	1	
	AN6290-8	. . GASKET	1	
-3	AN6271-6-38½	. . HOSE ASSEMBLY	1	
	AN837-6D	. . ELBOW	1	
	AN6289D6	. . NUT	1	
	AN6291-6	. . RING	1	
	AN6290-6	. . GASKET	1	
-4	22E7002-5	. . TUBE ASSEMBLY	1	
	42E7002-6	. . TUBE ASSEMBLY	1	Il
	AN815-6D	. . UNION	1	
	AN6290-6	. . GASKET	1	
-4A	AN6271-12-8¾	. . HOSE ASSEMBLY	1	
	AN832-8D	. . UNION	1	
	AN824-12D	. . TEE	1	
	AN6291-8D	. . NUT	1	
	AN6291-8	. . RING	1	
	AN6290-8	. . GASKET	2	
-5	AN6200-6AB	. . VALVE, Relief	1	
		Attaching Parts		
	AN23-21A	. . BOLT	3	
	AN365-1032	. . NUT	3	
	NAS43DD3-44	. . SPACER	3	
	AN960D10	. . WASHER	3	
	AN960D10L	. . WASHER	3	
		———*———		
	AN837-6D	. . ELBOW	2	
	AN6289D6	. . NUT	2	
	AN6291-6	. . RING	2	
	AN6290-6	. . GASKET	2	
-6	22E7002-3	. . TUBE ASSEMBLY	1	
-7	22E7002-4	. . TUBE ASSEMBLY	1	
	AN832-6D	. . UNION	2	
	AN924-6D	. . NUT	2	
-7A	42E7001-58	. TUBE ASSEMBLY	1	AK,CU
	42E7001-131	. TUBE ASSEMBLY	1	AM,CV
	AN837-12D	. ELBOW	1	AK,CU
	AN815-12D	. UNION	1	AM,CV
-7B	42E7002-76	. TUBE ASSEMBLY	1	HI
-8	42E7001-56	. TUBE ASSEMBLY	1	AK,CU
	42E7001-115	. TUBE ASSEMBLY	1	AM,CV
	AN815-6D	. UNION	1	

*For proper usable on codes and complete breakdown, see figure number as indicated.

Figure and Index Number	Part Number	1 2 3 4 5 6 7 Description	Units per Assembly	Usable On Code
93-9	42E7001-55	. TUBE ASSEMBLY	1	AK,CU
	42E7001-113	. TUBE ASSEMBLY	1	AM,CV
	AN815-6D	. UNION	1	
-9A	42E7001-4	. TUBE ASSEMBLY	1	AK,CU
	42E7001-101	. TUBE ASSEMBLY	1	AM,CV
-10	42E7001-54	. TUBE ASSEMBLY	1	AK,CU
	42E7001-111	. TUBE ASSEMBLY	1	AM,CV
-11	42E7001-53	. TUBE ASSEMBLY	1	AK,CU
	42E7001-109	. TUBE ASSEMBLY	1	AM,CV
	AN824-6D	. TEE	1	
-12	42E7001-6	. TUBE ASSEMBLY	1	AK,CU
	42E7001-103	. TUBE ASSEMBLY	1	AM,CV
	42E7007-1	. OUTLET INSTALLATION, Hydraulic test, see fig. 91	Ref	
▌ -12A	TA155-S4-12D	. . COUPLING HALF (AQ)	1	
	155-S6-12D	. . CAP, Dust (AQ)	1	
	AN927-12D	. . ELBOW	1	
	AN6289D12	. . NUT	1	
	AN6291-12	. . RING	1	
	AN6290-12	. . GASKET	1	
▌ -13	TB155-S4-8D	. . COUPLING HALF (AQ)	1	
	155-S6-8D	. . CAP, Dust (AQ)	1	
	AN927-8D	. . ELBOW	1	
	AN6289D8	. . NUT	1	
	AN6291-8	. . RING	1	
	AN6290-8	. . GASKET	1	
-14	42E7001-8	. TUBE ASSEMBLY	1	AK,CU
	42E7001-107	. TUBE ASSEMBLY	1	AM,CV
	AN834-6D	. ELBOW	1	AU
	AN833-6D	. ELBOW	1	AU
	AN960D916	. WASHER	2	
	AN924-6D	. NUT	2	
-15	42E7001-5	. TUBE ASSEMBLY	1	AK,CU
	42E7001-123	. TUBE ASSEMBLY	1	AM,CV
-16	42E7001-52	. TUBE ASSEMBLY	1	AK,CU
	42E7001-129	. TUBE ASSEMBLY	1	AM,CV
	AN815-6D	. UNION	2	AU
-17	42E7001-51	. TUBE ASSEMBLY	1	AK,CU
	42E7001-127	. TUBE ASSEMBLY	1	AM,CV
-18	42E7001-50	. TUBE ASSEMBLY	1	AK,CU
	42E7001-125	. TUBE ASSEMBLY	1	AM,CV
	AN832-6D	. UNION	1	AU
	AN804D6	. TEE	1	
	AN924-6D	. NUT	2	
	AN960D916	. WASHER	2	
-19	42E7001-13	. TUBE ASSEMBLY	1	EA,C
	AN824-6D	. TEE	1	
-20	42E7001-10	. TUBE ASSEMBLY	1	EA,C
	AN919-12D	. REDUCER	1	
	AN6290-8	. GASKET	1	
-21	42E7001-9	. TUBE ASSEMBLY	1	EA,C
	AN837-6D	. ELBOW	1	
	AN6289-6	. NUT	1	
	AN6291-6	. RING	1	
	AN6290-6	. GASKET	1	
-22	100279	. VALVE (WTR)	1	EA,C
		Attaching Parts		
	AN501A10-6	. SCREW	3	AU
	AN960D10	. WASHER	3	
	AN960D10L	. WASHER	3	AU
	AN995F41	. WIRE, Lock	AR	
		———*———		
-23	42E7001-80	. SHAFT ASSEMBLY	1	EA,C
	22E7069-1	. . ADAPTER, Hydraulic control valve stem	1	
	AN270B8	. . JOINT, Universal	1	AU

Figure and Index Number	Part Number	1 2 3 4 5 6 7 Description	Units per Assembly	Usable On Code
93-	22E7070-2	. . TUBE, Hydraulic control valve torque	1	EA,C
	42E7067-1	. SUPPORT INSTALLATION, Hydraulic gage and valve	1	AU
	42E7067-2	. . SUPPORT ASSEMBLY, Hydraulic gage and valve	1	EA,DV
	42E7067-6	. . SUPPORT ASSEMBLY, Hydraulic gage and valve	1	EH
-24	22E7013-1	. . . COVER, LH	1	AU
		Attaching Parts		
	AN3-4A	. . . BOLT	3	AU
	AN960D10L	. . . WASHER	3	AU
	2-0-80	. . . STUD (LFK)	4	EA,DV
	2600-1	. . . STUD (CLC)	4	EH
	2-0-100	. . . STUD (LFK)	1	EA,DV
	2600-2	. . . STUD (CLC)	1	EH
	GOS-2-93	. . . GROMMET (LFK)	5	EA,DV
	212-12ND	. . . RECEPTACLE (CLC)	5	EH
	22E7063-20	. . . SPACER	5	EA,DV
	2600-SW	. . . WASHER (CLC)	5	EH
		———*———		
-25	22E7012-1	. . . COVER, RH	1	EA,FW
	22E7012-4	. . . COVER, RH	1	DD
		Attaching Parts		
	AN3-4A	. . . BOLT	2	AU
	AN3-5A	. . . BOLT	1	AU
	AN960D10	. . . WASHER	1	AU
	AN960D10L	. . . WASHER	2	AU
	2-0-80	. . . STUD (LFK)	4	EA,DV
	2600-1	. . . STUD (CLC)	4	EH
	2-0-100	. . . STUD (LFK)	1	EA,DV
	2600-2	. . . STUD (CLC)	1	EH
	GOS-2-93	. . . GROMMET (LFK)	5	EA,DV
	212-12ND	. . . RECEPTACLE (CLC)	5	EH
	22E7063-20	. . . SPACER	5	EA,DV
	2600-SW	. . . WASHER (CLC)	5	EH
		———*———		
-26	22E7073-1	. . . COVER	1	AU
		Attaching Parts		
	AN3-4A	. . . BOLT	4	
	AN530-4R8	. . . SCREW	2	
	AN960D10	. . . WASHER	3	
	AN960D10L	. . . WASHER	1	
	AN960D4	. . . WASHER	2	
		———*———		
	22E7014-1	. . . COVER	1	AU
-27	4850-1	. . . FIXTURE, Light (GMC)	1	
		Attaching Parts		
	AN515B6R12	. . . SCREW	2	AU
	A8943-632	. . . NUT (TIN)	2	
	AN960D6L	. . . WASHER	2	
		———*———		
-28	AW1-⅞CN13	. . . GAGE (UG) (GFAE)	1	
		Attaching Parts		
	AN515B6R14	. . . SCREW	2	AU
	A8943-632	. . . NUT (TIN)	2	
	AN960D6L	. . . WASHER	2	
		———*———		
-29	4850-1	. . . FIXTURE, Light (GMC)	1	
		Attaching Parts		
	AN515B6R8	. . . SCREW	2	AU
	AN365B632	. . . NUT	2	
	AN960D6	. . . WASHER (Under nut)	2	
	AN960D6L	. . . WASHER (Under hd)	2	
		———*———		

Figure and Index Number	Part Number	Description (1 2 3 4 5 6 7)	Units per Assembly	Usable On Code
93-30	066654	. . . HANDLE (AS)	1	
		Attaching Parts		
	AN525-832R16	. . . SCREW	1	AU
	AN365-832	. . . NUT	1	AU
	AN960D8	. . . WASHER	1	AU
		———*———		
	22E7065-2	. . . PLATE	1	EA,C
		Attaching Parts		
	AN526-1032R10	. . . SCREW	2	AU
	AN365-1032	. . . NUT	2	AU
	AN960D10	. . . WASHER (Under nut)	2	AU
	AN960D10L	. . . WASHER (Under hd)	2	AU
		———*———		
-31	22E7064-1	. . . GUARD	1	
		Attaching Parts		
	AN526-1032R7	. . . SCREW	1	
	AN364-1032	. . . NUT	1	
	AN960D10	. . . WASHER (Under nut)	1	
	AN960D10L	. . . WASHER (Under hd)	1	
		———*———		
	BZ-2RQ1T04	. . . SWITCH (MCS)	1	FJ
		Attaching Parts		
	AN500A6-18	. . . SCREW	2	FJ
	AN365-632	. . . NUT	2	FJ
	AN960D6	. . . WASHER	2	FJ
	AN960D6L	. . . WASHER	2	FJ
		———*———		
	42E7067-4	. . . PLATE	1	FJ
	42E7073-1	. . . COVER	1	FJ
	42E7067-3	. . . ANGLE	1	FJ
	42E7072-1	. . . CAM	1	EA,DV
	22E7066-1	. . . SHAFT	1	
	AN270B8	. . . JOINT, Universal	1	
		Attaching Parts		
	AN525-832R14	. . . SCREW	1	AU
	AN365-832	. . . NUT	1	AU
	AN960-10L	. . . WASHER	1	AU
		———*———		
-32	22E7063-11	. . . HOUSING ASSEMBLY	1	EA,DV
	22E7063-23	. . . HOUSING ASSEMBLY	1	EH
		Attaching Parts		
	AN3-4A	. . . BOLT	4	AU
	AN960D10L	. . . WASHER	8	AU
		———*———		
-33	22E7072-1	. . . BRUSH, Seal LH	1	AU
-34	22E7072-2	. . . BRUSH, Seal RH	1	AU
		Attaching Parts		
	AN530-4R8	. . . SCREW	3	AU
	AN960D4	. . . WASHER	3	AU
		———*———		
-35	11D-2	. SNUBBER (RPS)	1	
	AN6290-4	. GASKET	1	
-36	MS28741-4-0060	. HOSE ASSEMBLY	1	EA,C
	AN894D6-4	. BUSHING	1	AU
	AN6290-4	. GASKET	1	AU
	AN834-6D	. TEE	1	AU
	AN6289D6	. NUT	1	AU
	AN6291-6	. RING	1	AU
	AN894D6-4	. BUSHING	1	AU
	AN6290-6	. GASKET	1	AU
-37	42E7001-17	. TUBE ASSEMBLY	1	AU
-38	AN6207-6	. VALVE	1	AU

Figure and Index Number	Part Number	1 2 3 4 5 6 7 Description	Units per Assembly	Usable On Code
93-	AN6290-6	. GASKET	1	
-39	42E7001-18	. TUBE ASSEMBLY	1	AU
	AN804D6	. TEE	1	AU
	AN6289D6	. NUT	1	AU
	AN893-12D	. BUSHING	1	AU
	AN6291-6	. RING	1	AU
	AN6290-6	. GASKET	1	AU
	AN6290-8	. GASKET	1	AU
-40	42E7001-19	. TUBE ASSEMBLY	1	AU
	AN926-6D	. TEE	1	AU
	AN833-6D	. ELBOW	1	AU
	42E7082-1	. NUT	1	AU
	AN6289D6	. NUT	1	AU
	AN924-6D	. NUT	1	AU
	AN815-6D	. UNION	1	AU
	AN6291-6	. RING	1	AU
	AN960D916L	. WASHER	1	AU
	AN6290-6	. GASKET	1	AU
-41	42E7001-21	. TUBE ASSEMBLY	1	AU
	AN926-6D	. TEE	1	AU
	AN6207-6	. VALVE	1	AU
	AN837-6D	. ELBOW	1	AU
	42E7082-1	. NUT	1	AU
	AN6289D6	. NUT	1	AU
	AN815-6D	. UNION	1	AU
	AN6291-6	. RING	1	AU
	AN960D916L	. WASHER	1	AU
	AN6290-6	. GASKET	1	AU
-42	42E7001-20	. TUBE ASSEMBLY	1	AU
	AN833-6D	ELBOW	1	AU
	AN6289D6	NUT	1	AU
	AN6291-6	. RING	1	AU
	AN6290-6	. GASKET	1	AU
	AN833-6D	. ELBOW	1	AU
	AN6289-6	. NUT	1	AU
	AN6291-6	. RING	1	AU
	AN6290-6	. GASKET	1	AU
-43	42E7001-16	. TUBE ASSEMBLY	1	AU
	AN834-6D	. TEE	1	AU
	AN924-6D	. NUT	1	AU
	AN960D916	. WASHER	1	AU
-44	42E7001-14	. TUBE ASSEMBLY	1	AU
	AN837-6D	. ELBOW	1	AU
	AN6289D6	. NUT	1	AU
	AN6291-6	. RING	1	AU
	AN6290-6	. GASKET	1	AU
-45	42E7001-15	. TUBE ASSEMBLY	1	AU
	42E7003-1	. FILTER AND ACCUMULATOR INSTALLATION, Hydraulic	1	AU
	AN833-6D	. . ELBOW	1	AU
	AN6289D6	. . NUT	1	AU
	AN6291-6	. . RING	1	AU
	AN893-12D	. . BUSHING	1	AU
	AN6290-6	. . GASKET	1	AU
	AN6290-8	. . GASKET	1	AU
-46	MS28700-1	. . ACCUMULATOR	1	AU
		Attaching Parts		
	AN4-6A	. . BOLT	4	AU
	AN365-428	. . NUT	4	AU
	AN960-416	. . WASHER	4	AU
	AN960D416	. . WASHER	4	AU
	AN960D416L	. . WASHER	4	AU

———*———

Figure and Index Number	Part Number	Description 1 2 3 4 5 6 7	Units per Assembly	Usable On Code
93-	42E7041-1	. . BLOCK, Accumulator support	2	AU
	42E7044-1	. . CLAMP, Half	2	AU
-47	AN6287-1	. . VALVE	1	
	AN6289D4	. . NUT	1	
	AN6291-4	. . RING	1	
	AN6290-4	. . GASKET	1	
	AN6285D1	. . BODY	1	
	AN6285D2	. . BOLT	1	
	47A1562	. . GASKET, "O" ring (USAF dwg No.)	1	AU
-48	AN5769-1B	. . GAGE	1	AU
-49	AN6234-2	. . FILTER	1	
		Attaching Parts		
	AN24-42A	. . BOLT	2	
	AN364-428	. . NUT	2	
	AN960D416	. . WASHER (Under nut)	2	
	AN960D416L	. . WASHER (Under hd)	2	
		———*———		
	AN833-6D	. ELBOW	1	AU
	AN6289D6	. NUT	1	AU
	AN6291-6	. RING	1	AU
	AN6290-6	. GASKET	1	AU
-50	42E7001-11	. TUBE ASSEMBLY	1	CK
	42E7001-85	. TUBE ASSEMBLY	1	D,CL
-51	42E7001-12	. TUBE ASSEMBLY	1	AU
	AN837-6D	. ELBOW	1	AU
	AN924-6D	. NUT	1	
	AN960D916	. WASHER	1	
-52	42E7001-22	. TUBE ASSEMBLY	1	AU
-53	42E7001-24	. TUBE ASSEMBLY	1	AU
-54	42E7001-87	. TUBE ASSEMBLY	1	AU
	AN824-6D	. TEE	1	AU
-54A	42E7001-89	. TUBE ASSEMBLY	1	AU
	22E7005-21	. LINES INSTALLATION, Boost actuator	1	AU
	AN784D6	. . TEE	1	
	AN938D6	. . TEE	1	
■	AN837-4D	. . ELBOW	1	AU
	AN833-6D	. . ELBOW	1	
	AN837-6D	. . ELBOW	1	
	AN6289D4	. . NUT	1	
	AN6289D6	. . NUT	1	
	AN6291-4	. . RING	1	
	AN6291-6	. . RING	1	
	42E7082-1	. . NUT	1	
	AN924-6D	. . NUT	1	
	AN960D916	. . WASHER	1	
	AN893-2D	. . BUSHING	1	
	AN960D916L	. . WASHER	1	
	AN6290-4	. . GASKET	1	
	AN6290-6	. . GASKET	1	
■ -55	MS28741-4-0176	. . HOSE ASSEMBLY	1	AU
	AN775-4	. . BOLT	1	
	AN776-4D	. . ELBOW	1	
	AN901-4A	. . GASKET	1	
	AN834-6D	. . TEE	1	AU
	AN928-6D	. . ELBOW	1	AU
	AN919-6D	. . REDUCER	1	AU
	AN6289D6	. . NUT	1	
	AN6291-6	. . RING	1	
	AN6290-6	. . GASKET	1	
■ -56	MS28741-4-0152	. . HOSE ASSEMBLY	1	AU
	AN775-4	. . BOLT	1	
	AN776-4D	. . ELBOW	1	

Figure and Index Number	Part Number	1 2 3 4 5 6 7 Description	Units per Assembly	Usable On Code
93-	AN901-4A	. . GASKET	1	
-57	22E7005-3	. . TUBE ASSEMBLY	1	
	AN833-6D	. . ELBOW	1	
	AN960D916L	. . WASHER	1	
	42E7082-1	. . NUT	1	
	AN832-6D	. . UNION	1	AU
	AN924-6D	. . NUT	1	AU
-58	22E7005-2	. . TUBE ASSEMBLY	1	
-59	22E7005-9	. . TUBE ASSEMBLY	1	AU
	AN832-6D	. . UNION	2	
	AN924-6D	. . NUT	2	
	PHS15303-9-13D	. . WASHER (PHL)	2	
	AN894D6-4	. . BUSHING	2	
	AN6290-6	. . GASKET	2	
-60	MS28741-4-0144	. . HOSE ASSEMBLY	2	AU
	AN775-4	. . BOLT	2	
	AN778-4D	. . ELBOW	2	
	AN901-4A	. . GASKET	2	
-61	22E7005-25	. . TUBE ASSEMBLY	1	AU
-62	22E7005-23	. . TUBE ASSEMBLY	1	
	AN784D6	. . TEE	2	
	AN919-6D	. . REDUCER	2	
	AN6289D6	. . NUT	2	
	AN924-6D	. . NUT	2	
	AN894D6-4	. . BUSHING	2	
	AN960D916L	. . WASHER	2	
	AN6291-6	. . RING	2	
	AN6290-6	. . GASKET	2	
-63	AN6271-4-18½	. . HOSE ASSEMBLY	2	
	AN775-4	. . BOLT	2	
	AN776-4D	. . ELBOW	2	
	AN901-4A	. . GASKET	2	
-64	22E7005-7	. . TUBE ASSEMBLY	1	
-65	22E7005-8	. . TUBE ASSEMBLY	1	
	AN833-4D	. . ELBOW	2	
	AN924-4D	. . NUT	2	
	AN960D716	. . WASHER	4	AU
-66	AN6271-4-17	. . HOSE ASSEMBLY	2	
	AN775-4	. . BOLT	2	
	AN778-4D	. . ELBOW	2	
	AN901-4A	. . GASKET	2	
	22E7071-3	. . SPRING ASSEMBLY, Flex. hose support tension	1	
		Attaching Parts		
	AN365-1032	. . NUT	2	
	AN960D10	. . WASHER	2	
	AN960-10	. . WASHER	2	
		———*———		
	22E7071-2	. . . SPRING	1	
	AN42-5A	. . . BOLT, Eye	1	
	AN42-13A	. . . BOLT, Eye	1	
	22C1753-84	. . SPACER	1	
-67	43E7001-17	. TUBE ASSEMBLY	1	HI
-68	43E7001-16	. TUBE ASSEMBLY	1	HI
-69	43E7001-2	. TUBE ASSEMBLY	1	HI
-70	43E7001-3	. TUBE ASSEMBLY	1	HI
■	AN821-8D	. ELBOW	2	HI
-71	AN6207-8	. VALVE, Check	1	HI
	AN734D8	. TEE	1	HI
	AN6289D8	. NUT	1	HI
	AN6291-8	. RING	1	HI
	AN6290-8	. GASKET	2	HI

Figure and Index Number	Part Number	Description 1 2 3 4 5 6 7	Units per Assembly	Usable On Code
93-72	1701	. VALVE (Lyndon Aircraft Corp, Newark, N J)	1	HI
		Attaching Parts		
	AN3-6A	. BOLT	3	HI
	AN960D10	. WASHER	3	HI
		———*———		
-73	43E7001-4	. TUBE ASSEMBLY	1	HI
-74	43E7001-5	. TUBE ASSEMBLY	1	HI
-75	43E7001-6	. TUBE ASSEMBLY	1	HI
-76	43E7001-7	. TUBE ASSEMBLY	1	HI
	AN815-8D	. UNION	2	HI
	AN924-8D	. NUT	2	HI
	AN960D1216	. WASHER	2	HI
	AN832-8D	. UNION	2	HI
-77	43E7001-8	. TUBE ASSEMBLY	1	HI
-78	43E7001-9	. TUBE ASSEMBLY	1	HI
	AN821-8D	. ELBOW	2	HI
-79	43E7001-10	. TUBE ASSEMBLY	1	HI
-80	43E7001-11	. TUBE ASSEMBLY	1	HI
	AN832-8D	. UNION	2	HI
	AN924-8D	. NUT	2	HI
	AN960D1216	. WASHER	2	HI
-81	43E7001-12	. TUBE ASSEMBLY	1	HI
-82	43E7001-13	. TUBE ASSEMBLY	1	HI
	AN924-8D	. NUT	2	HI
	AN960D1216	. WASHER	2	HI
-83	TB155-S2-8D	. COUPLING, Half (AQ)	2	HI
-84	155-S7-8D	. CAP, Dust ((AQ)	2	HI

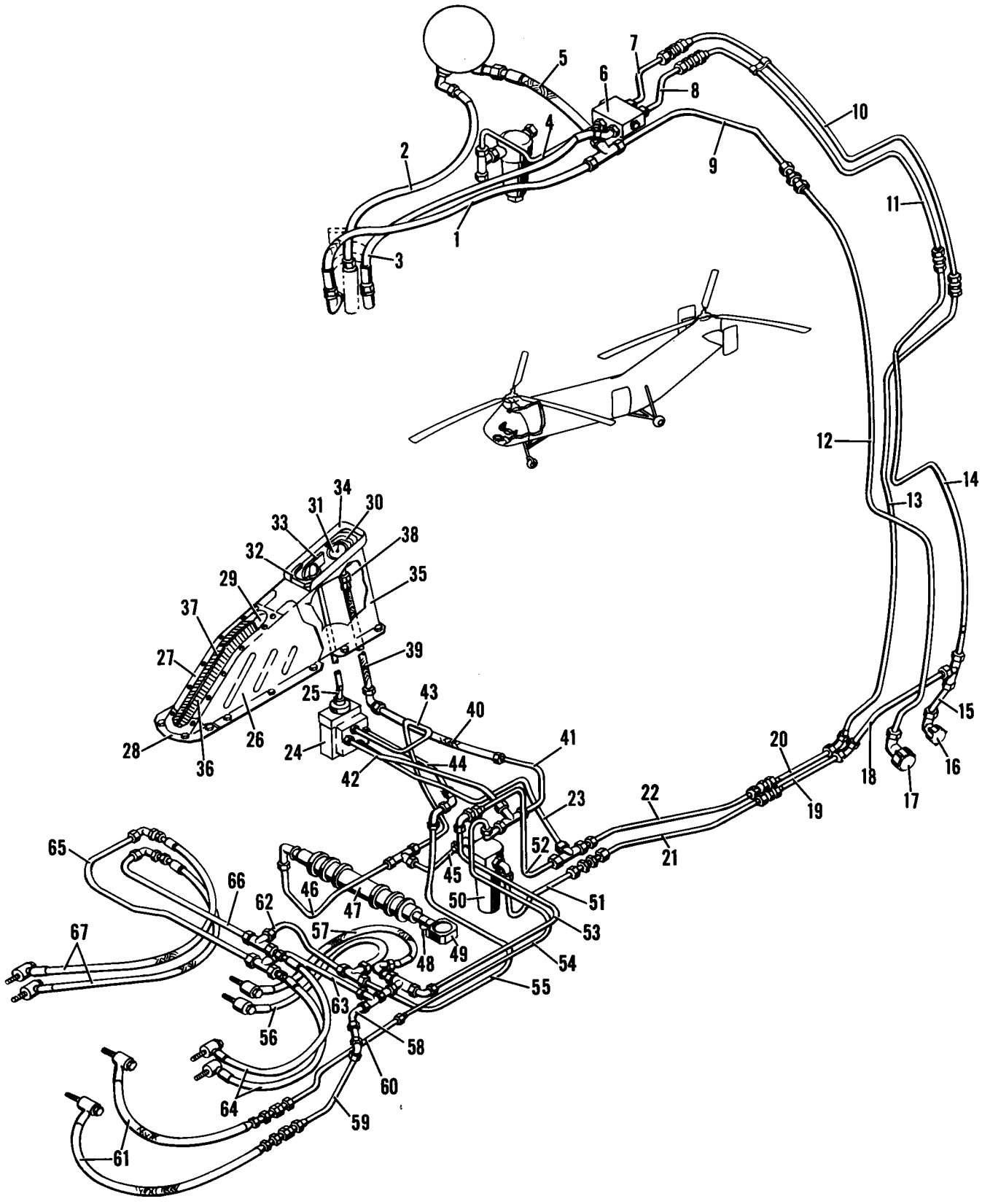

Figure 93A. Hydraulic Controls, H-21B 52-8681 thru 52-8709, 53-4322 thru 53-4402, 54-4000 thru 54-4008, and 55-5127 thru 55-5131

Figure and Index Number	Part Number	Description 1 2 3 4 5 6 7	Units per Assembly	Usable On Code
93A-	42E7001-151	CONTROLS SYSTEM INSTALLATION, Hydraulic, see fig. 91	Ref	
	22E7002-2	. HYDRAULIC SYSTEM, Fwd transmission area, see fig. 91	Ref	
	AN833-12D	. . ELBOW	1	
	AN6289D12	. . NUT	1	
	AN6291-12	. . RING	1	
	AN6290-12	. . GASKET	1	
-1	AN6271-12-33	. . HOSE ASSEMBLY	1	
	AN815-6D	. . UNION	1	
	AN6290-6	. . GASKET	1	
-2	AN6271-6-37	. . HOSE ASSEMBLY	1	
	AN939D8	. . ELBOW	1	
	AN919-12D	. . REDUCER	1	
	AN6290-8	. . GASKET	1	
	AN833-6D	. . ELBOW	1	
	AN6289D6	. . NUT	1	
	AN6291-6	. . RING	1	
	AN893-12D	. . BUSHING	1	
	AN6290-6	. . GASKET	1	
	AN6290-8	. . GASKET	1	
-3	AN6271-6-38½	. . HOSE ASSEMBLY	1	
	AN837-6D	. . ELBOW	1	
	AN6289D6	. . NUT	1	
	AN6291-6	. . RING	1	
	AN6290-6	. . GASKET	1	
-4	22E7002-5	. . TUBE ASSEMBLY	1	
	AN815-6D	. . UNION	1	
	AN6290-6	. . GASKET	1	
-5	AN6271-12-8¾	. . HOSE ASSEMBLY	1	
	AN832-8D	. . UNION	1	
	AN6290-8	. . GASKET	2	
	AN6291-8	. . RING	1	
	AN6289D8	. . NUT	1	
	AN824-12D	. . TEE	1	
-6	AN6200-6AB	. . VALVE, Relief	1	
		Attaching Parts		
	AN23-21A	. . BOLT	3	
	AN365-1032	. . NUT	3	
	NAS43DD3-44	. . SPACER	3	
	AN960D10	. . WASHER	3	
	AN960D10L	. . WASHER	3	
		———*———		
	AN837-6D	. . ELBOW	2	
	AN6289D6	. . NUT	2	
	AN6291-6	. . RING	2	
	AN6290-6	. . GASKET	2	
-7	22E7002-3	. . TUBE ASSEMBLY	1	
-8	22E7002-4	. . TUBE ASSEMBLY	1	
	AN832-6D	. . UNION	2	
	AN924-6D	. . NUT	2	
-9	42E7001-131	. TUBE ASSEMBLY	1	
	AN815-12D	. UNION	1	
-10	42E7001-115	. TUBE ASSEMBLY	1	
-11	42E7001-113	. TUBE ASSEMBLY	1	
	AN815-6D	. UNION	2	
-12	42E7001-101	. TUBE ASSEMBLY	1	
-13	42E7001-111	. TUBE ASSEMBLY	1	
-14	42E7001-109	. TUBE ASSEMBLY	1	
	AN824-6D	. TEE	1	
-15	42E7001-103	. TUBE ASSEMBLY	1	

Figure and Index Number	Part Number	Description 1 2 3 4 5 6 7	Units per Assembly	Usable On Code
93A-	42E7007-1	. OUTLET INSTALLATION, Hydraulic test, see fig. 91	Ref	
-16	155-S4-12D	. . COUPLING HALF (AQ)	1	
	155-S6-12D	. . CAP, Dust (AQ)	1	
	AN927-12D	. . ELBOW	1	
	AN6289D12	. . NUT	1	
	AN6291-12	. . RING	1	
	AN6290-12	. . GASKET	1	
-17	155-S4-8D	. . COUPLING HALF (AQ)	1	
	155-S6-8D	. . CAP, Dust (AQ)	1	
	AN927-8D	. . ELBOW	1	
	AN6289D8	. . NUT	1	
	AN6291-8	. . RING	1	
	AN6290-8	. . GASKET	1	
-18	42E7001-107	. TUBE ASSEMBLY	1	
	AN834-6D	. ELBOW	1	
	AN833-6D	. ELBOW	1	
	AN960D916	. WASHER	2	
	AN924-6D	. NUT	2	
-19	42E7001-123	. TUBE ASSEMBLY	1	
-20	42E7001-129	. TUBE ASSEMBLY	1	
	AN815-6D	. UNION	2	
-21	42E7001-127	. TUBE ASSEMBLY	1	
-22	42E7001-125	. TUBE ASSEMBLY	1	
	AN832-6D	. UNION	1	
	AN804D6	. TEE	1	
	AN924-6D	. NUT	2	
	AN960D916	. WASHER	2	
-23	42E7001-135	. TUBE ASSEMBLY	1	EB
	AN815-6D	. UNION	1	
	AN6290-6	. GASKET	1	
-24	903	. VALVE (ELE)	1	EB
		Attaching Parts		
	AN501A10-6	. SCREW	4	
	AN960D10	. WASHER	4	
	AN995F41	. WIRE, Lock	4	
		———*———		
-25	42E7001-152	. SHAFT ASSEMBLY	1	EB
	22E7069-1	. . ADAPTER	1	AU
	AN270B8	. . JOINT, Universal	1	AU
	22E7070-3	. . TUBE, Hydraulic control valve torque	1	EB
	42E7067-1	. SUPPORT INSTALLATION, Hydraulic gage and valve	1	AU
	42E7067-2	. . SUPPORT ASSEMBLY, Hydraulic gage and valve	1	FT
	42E7067-6	. . SUPPORT ASSEMBLY, Hydraulic gage and valve	1	EI
-26	22E7013-1	. . . COVER, LH	1	AU
		Attaching Parts		
	AN3-4A	. . . BOLT	3	
	AN960D10L	. . . WASHER	3	
	2-0-80	. . . STUD (LFK)	4	FT
	2600-1	. . . STUD (CLC)	4	EI
	2-0-100	. . . STUD (LFK)	1	FT
	2600-2	. . . STUD (CLC)	1	EI
	GOS-2-93	. . . GROMMET (LFK)	5	FT
	212-12ND	. . . RECEPTACLE (CLC)	5	EI
	22E7063-20	. . . SPACER	5	FT
	2600-SW	. . . WASHER (CLC)	5	EI
		———*———		
-27	22E7012-1	. . . COVER, RH	1	FU
	22E7012-4	. . . COVER, RH	1	FV
		Attaching Parts		
	AN3-4A	. . . BOLT	2	
	AN3-5A	. . . BOLT	1	

Figure and Index Number	Part Number	1 2 3 4 5 6 7 Description	Units per Assembly	Usable On Code
93A-	AN960D10	. . . WASHER	1	
	AN960D10L	. . . WASHER	2	
	2-0-80	. . . STUD (LFK)	4	FT
	2600-1	. . . STUD (CLC)	4	EI
	2-0-100	. . . STUD (LFK)	1	FT
	2600-2	. . . STUD (CLC)	1	EI
	GOS-2-93	. . . GROMMET (LFK)	5	FT
	212-12ND	. . . RECEPTACLE (CLC)	5	EI
	22E7063-20	. . . SPACER	5	FT
	2600-SW	. . . WASHER (CLC)	5	EI
		———*———		
-28	22E7073-1	. . . COVER	1	AU
		Attaching Parts		
	AN3-4A	. . . BOLT	4	
	AN530-4R8	. . . SCREW	2	
	AN960D10	. . . WASHER	3	
	AN960D10L	. . . WASHER	1	
	AN960D4	. . . WASHER	2	
		———*———		
-29	22E7014-1	. . . COVER	1	AU
-30	4850-1	. . . FIXTURE, Light (GMC)	1	
		Attaching Parts		
	AN515B6R12	. . . SCREW	2	AU
	A8943-632	. . . NUT (TIN)	2	
	AN960D6L	. . . WASHER	2	
		———*———		
-31	AW1-⅞CN13	. . . GAGE (UG) (GFAE)	1	
		Attaching Parts		
	AN515B6R14	. . . SCREW	2	
	A8943-632	. . . NUT (TIN)	2	
	AN960D6L	. . . WASHER	2	
		———*———		
-32	4850-1	. . . FIXTURE, Light (GMC)	1	
		Attaching Parts		
	AN515B6R8	. . . SCREW	2	
	AN365B632	. . . NUT	2	
	AN960D6	. . . WASHER (Under nut)	2	
	AN960D6L	. . . WASHER (Under hd)	2	
		———*———		
-33	066654	. . . HANDLE (AS)	1	
		Attaching Parts		
	AN525-832R16	. . . SCREW	1	
	AN365-832	. . . NUT	1	
	AN960D8	. . . WASHER	1	
		———*———		
	22E7065-3	. . . PLATE	1	EB
		Attaching Parts		
	AN526-1032R10	. . . SCREW	2	
	AN365-1032	. . . NUT	2	
	AN960D10	. . . WASHER (Under nut)	2	
	AN960D10L	. . . WASHER (Under hd)	2	
		———*———		
-34	22E7064-1	. . . GUARD	1	
		Attaching Parts		
	AN526-1032R7	. . . SCREW	1	
	AN364-1032	. . . NUT	1	
	AN960D10	. . . WASHER (Under nut)	1	
	AN960D10L	. . . WASHER (Under hd)	1	
		———*———		
	BZ-2RQ1T04	. . . SWITCH (MCS)	1	

Figure and Index Number	Part Number	1 2 3 4 5 6 7 Description	Units per Assembly	Usable On Code
93A-		*Attaching Parts*		
	AN500A6-18	. . . SCREW	2	
	AN365-632	. . . NUT	2	
	AN960D6	. . . WASHER (Under nut)	2	
	AN960D6L	. . . WASHER (Under hd)	2	
		———*———		
	42E7067-4	. . . PLATE	1	FT
	42E7073-1	. . . COVER	1	
	42E7067-3	. . . ANGLE	1	
	42E7081-2	. . . CAM	1	EB
	22E7066-1	. . . SHAFT	1	
	AN207B8	. . . JOINT, Universal	1	
		Attaching Parts		
	AN525-832R14	. . . SCREW	1	
	AN365-832	. . . NUT	1	
	AN960-10L	. . . WASHER	1	
		———*———		
-35	22E7063-11	. . . HOUSING ASSEMBLY	1	FT
	22E7063-23	. . . HOUSING ASSEMBLY	1	EI
		Attaching Parts		
	AN3-4A	. . . BOLT	4	
	AN960D10L	. . . WASHER	8	
		———*———		
-36	22E7072-1	. . . BRUSH, Seal LH	1	
-37	22E7072-2	. . . BRUSH, Seal RH	1	
		Attaching Parts		
	AN530-4R8	. . . SCREW	5	
	AN960D4	. . . WASHER	5	
		———*———		
-38	11D-2	. SNUBBER (RPS)	1	
	AN6290-4	. GASKET	1	
-39	MS28741-4-0060	. HOSE ASSEMBLY	1	EB
	AN821-4D	. ELBOW	1	
	MS21919G8	. CLAMP	1	EB
-40	MS28741-4-0130	. HOSE ASSEMBLY	1	EB
	AN815-4D	. UNION	1	
-41	42E7001-145	. TUBE ASSEMBLY	1	EB
	AN926-6D	. TEE	1	
	AN833-6D	. ELBOW	1	
	42E7082-1	. NUT	1	
	AN919-6D	. REDUCER	1	
	AN6290-6	. GASKET	3	
	AN6291-6	. RING	1	
	AN960D916	. WASHER	1	
	AN960D916L	. WASHER	1	
-42	42E7001-143	. TUBE ASSEMBLY	1	EB
	AN815-6D	. UNION	1	
	AN6290-6	. GASKET	1	
-43	42E7001-137	. TUBE ASSEMBLY	1	EB
	AN815-6D	. UNION	1	
	AN6290-6	. GASKET	1	
	AN804D6	. TEE	1	
	AN924-6D	. NUT	1	
	AN960D916	. WASHER	1	
-44	42E7001-139	. TUBE ASSEMBLY	1	EB
	AN815-6D	. UNION	1	
	AN6290-6	. GASKET	1	
	AN837-6D	. ELBOW	1	
	AN924-6D	. NUT	1	
	AN960D916	. WASHER	1	
	AN960D916L	. WASHER	1	

Figure and Index Number	Part Number	Description 1 2 3 4 5 6 7	Units per Assembly	Usable On Code
93A-45	42E7001-14	. TUBE ASSEMBLY	1	
	AN837-6D	. ELBOW	1	
	AN6289D6	. NUT	1	EB
	AN6290-6	. GASKET	1	
	AN6291-6	. RING	1	
-46	42E7001-15	. TUBE ASSEMBLY	1	
	42E7003-1	. FILTER AND ACCUMULATOR INSTALLATION, Hydraulic	1	AU
	AN833-6D	. . ELBOW	1	
	AN6289D	. . NUT	1	
	AN6291-6	. . RING	1	
	AN893-12D	. . BUSHING	1	
	AN6290-6	. . GASKET	1	
	AN6290-8	. . GASKET	1	
-47	MS28700-1	. . ACCUMULATOR	1	AU
		Attaching Parts		
	AN4-6A	. . BOLT	4	
	AN365-428	. . NUT	4	
	AN960-416	. . WASHER	4	
	AN960D416	. . WASHER	4	
	AN960D416L	. . WASHER	4	
		———*———		
	42E7041-1	. . BLOCK, Accumulator support	2	
	42E7044-1	. . CLAMP, Half	2	AU
-48	AN6287-1	. . VALVE	1	
	AN6289D4	. . NUT	1	
	AN6291-4	. . RING	1	
	AN6290-4	. . GASKET	1	
	AN6285D1	. . BODY	1	
	AN6285D2	. . BOLT	1	
	47A1562	. . GASKET, "O" ring (USAF dwg No.)	1	AU
-49	AN5769-1B	. . GAGE	1	AU
-50	AN6234-2	. . FILTER	1	
		Attaching Parts		
	AN24-42A	. . BOLT	2	
	AN364-428	. . NUT	2	
	AN960D416	. . WASHER (Under nut)	2	
	AN960D416L	. . WASHER (Under hd)	2	
		———*———		
	AN833-6D	. ELBOW	1	
	AN6289D6	. NUT	1	
	AN6291-6	. RING	1	
	AN6290-6	. GASKET	1	
-51	42E7001-85	. TUBE ASSEMBLY	1	EB
-52	42E7001-12	. TUBE ASSEMBLY	1	AU
	AN837-6D	. ELBOW	1	
	AN924-6D	. NUT	1	
	AN960D916	. WASHER	1	
-53	42E7001-22	. TUBE ASSEMBLY	1	AU
-54	42E7001-24	. TUBE ASSEMBLY	1	AU
-55	42E7001-89	. TUBE ASSEMBLY	1	AU
	22E7005-21	. LINES INSTALLATION, Boost actuator	1	AU
	AN784D6	. . TEE	1	
	AN938D6	. . TEE	1	
	AN833-4D	. . ELBOW	1	
	AN833-6D	. . ELBOW	1	
	AN837-6D	. . ELBOW	1	
	AN6289D4	. . NUT	1	
	AN6289D6	. . NUT	1	
	AN6291-4	. . RING	1	
	AN6291-6	. . RING	1	
	42E7082-1	. . NUT	1	

Figure and Index Number	Part Number	1 2 3 4 5 6 7 Description	Units per Assembly	Usable On Code
93A-	AN924-6D	. . NUT	1	
	AN893-2D	. . BUSHING	1	
	AN960D916	. . WASHER	1	
	AN960D916L	. . WASHER	1	
	AN6290-4	. . GASKET	1	
	AN6290-6	. . GASKET	1	
-56	MS28741-4-0152	. . HOSE ASSEMBLY	1	
	AN775-4	. . BOLT	1	
	AN776-4D	. . ELBOW	1	
	AN901-4A	. . GASKET	1	
	AN834-6D	. . TEE	1	
	AN928-6D	. . ELBOW	1	
	AN919-6D	. . REDUCER	1	
	AN6289D6	. . NUT	1	
	AN6291-6	. . RING	1	
	AN6290-6	. . GASKET	1	
-57	MS28741-4-0176	. . HOSE ASSEMBLY	1	
	AN775-4	. . BOLT	1	
	AN776-4D	. . ELBOW	1	
	AN901-4A	. . GASKET	1	
-58	22E7002-3	. . TUBE ASSEMBLY	1	
	AN833-6D	. . ELBOW	1	
	42E7082-1	. . NUT	1	
	AN924-6D	. . NUT	2	
	AN832-6D	. . UNION	1	
	AN960D916L	. . WASHER	2	
-59	22E7005-2	. . TUBE ASSEMBLY	1	
-60	22E7005-9	. . TUBE ASSEMBLY	1	
	AN832-6D	. . UNION	2	
	AN924-6D	. . NUT	2	
	AN894D6-4	. . BUSHING	2	
	PHS15303-9-13D	. . WASHER (PHL)	2	
	AN6290-6	. . GASKET	2	
-61	MS28741-4-0144	. . HOSE ASSEMBLY	2	
	AN775-4	. . BOLT	2	
	AN778-4D	. . ELBOW	2	
	AN901-4A	. . GASKET	2	
-62	22E7005-25	. . TUBE ASSEMBLY	1	
-63	22E7005-23	. . TUBE ASSEMBLY	1	
	AN784D6	. . TEE	2	
	AN919-6D	. . REDUCER	2	
	AN6289D6	. . NUT	2	
	AN924-6D	. . NUT	2	
	AN894D6-4	. . BUSHING	2	
	AN6291-6	. . RING	2	
	AN960D916	. . WASHER	2	
	AN6290-6	. . GASKET	2	
-64	AN6271-4-18½	. . HOSE ASSEMBLY	2	
	AN775-4	. . BOLT	2	
	AN776-4D	. . ELBOW	2	
	AN901-4A	. . GASKET	2	
-65	22E7005-7	. . TUBE ASSEMBLY	1	
-66	22E7005-8	. . TUBE ASSEMBLY	1	
	AN833-4D	. . ELBOW	2	
	AN924-4D	. . NUT	2	
	AN960D716	. . WASHER	4	
-67	AN6271-4-17	. . HOSE ASSEMBLY	2	
	AN775-4	. . BOLT	2	
	AN778-4D	. . ELBOW	2	
	AN901-4A	. . GASKET	2	

Figure and Index Number	Part Number	1 2 3 4 5 6 7 Description	Units per Assembly	Usable On Code
93A-	22E7071-3	. . SPRING ASSEMBLY, Flex. hose support tension	1	
		Attaching Parts		
	AN365-1032	. . NUT	2	
	AN960D10	. . WASHER	2	
	AN960-10	. . WASHER	2	
		————*————		
	22E7071-2	. . . SPRING	1	
	AN42-5A	. . . BOLT, Eye	1	
	AN42-13A	. . . BOLT, Eye	1	
	22C1753-84	. . SPACER	1	

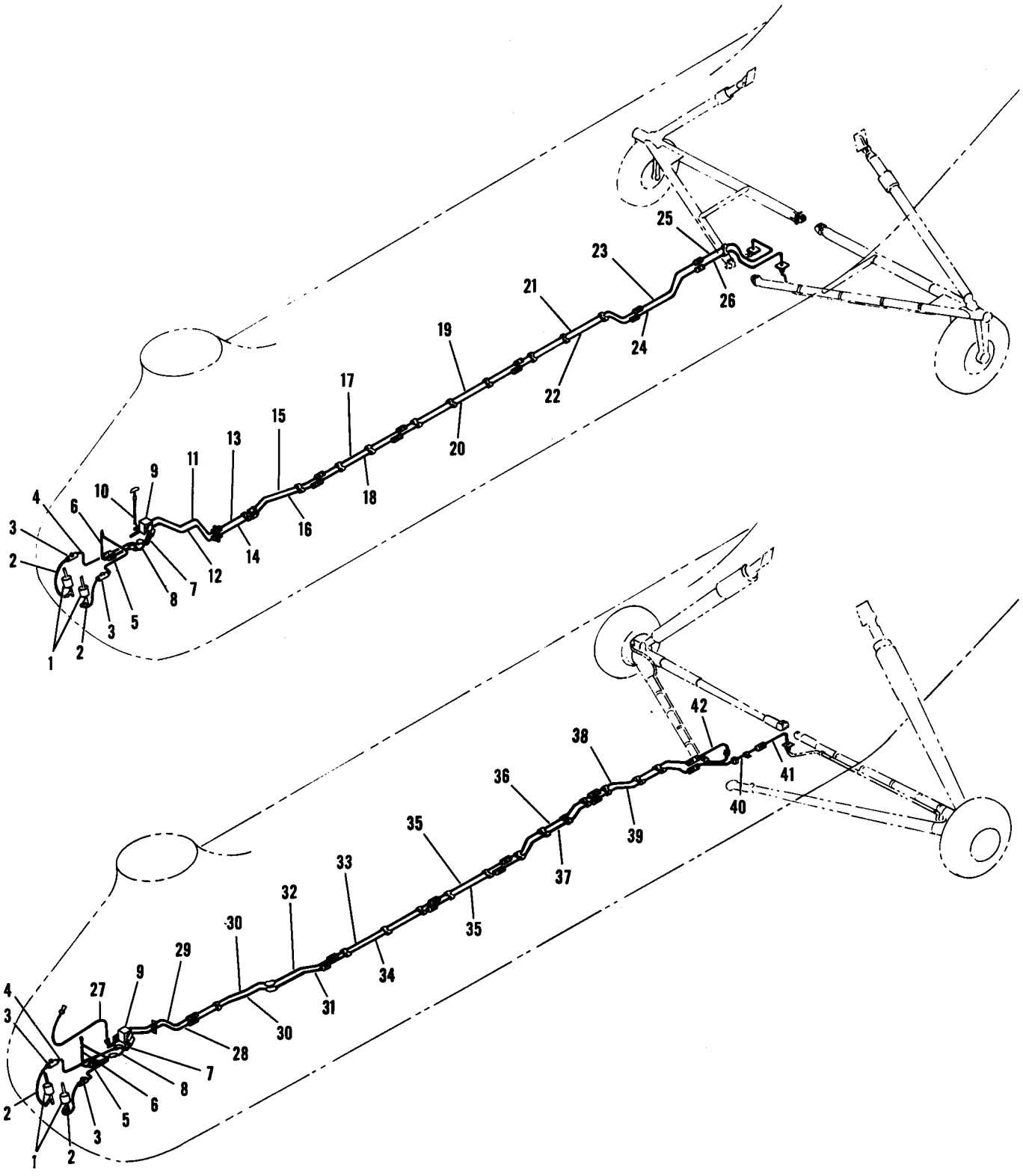

Figure 94. Hydraulic Brakes

Figure and Index Number	Part Number	Description 1 2 3 4 5 6 7	Units per Assembly	Usable On Code
94-	22E7010-1	BRAKE SYSTEM INSTALLATION, Hydraulic	1	A
	22E7010-51	BRAKE SYSTEM INSTALLATION, Hydraulic	1	E
	22E7010-46	BRAKE SYSTEM INSTALLATION, Hydraulic	1	D,IS
	22E7010-101	BRAKE SYSTEM INSTALLATION, Hydraulic	1	HI
-1	24963	. CONTROL UNIT, Master (AP)	2	
		Attaching Parts		
	AN23-13	. BOLT	1	
	AN23-17	. BOLT	1	
	AN381-2-3	. PIN, Cotter	1	
	AN381-2-8	. PIN, Cotter	1	
	AN320-3	. NUT	2	
	AN960-10L	. WASHER	1	
	AN960D10	. WASHER	1	
	AN960D10L	. WASHER	1	
		———*———		
-2	MS28741-4-0134	. HOSE ASSEMBLY	2	
	AN6289D4	. NUT	2	
	MS29512-4	. GASKET	2	
	AN6291-4	. RING	2	
	AN837-4D	. ELBOW	2	
-3	AN784D4	. TEE	2	
	AN929-4	. CAP ASSEMBLY	2	
	AN924-4D	. NUT	2	
	AN960D716	. WASHER	4	
-4	22E7010-20	. TUBE ASSEMBLY	1	
	AN833-4D	. ELBOW	1	
	AN924-4D	. NUT	1	
	AN960D716	. WASHER	1	
-5	22E7010-47	. TUBE ASSEMBLY	1	
	AN837-4D	. ELBOW	1	
	AN924-4D	. NUT	1	
	AN960D716	. WASHER	1	
-6	22E7010-49	. TUBE ASSEMBLY	1	
	AN833-4D	. ELBOW	1	
	AN924-4D	. NUT	1	
	AN960D716	. WASHER	1	
-7	22E7010-18	. TUBE ASSEMBLY	1	
-8	22E7010-19	. TUBE ASSEMBLY	1	
	AN825-4D	. TEE	2	
	AN929-4	. CAP	2	
-9	450	. VALVE, On-off (ELE)	1	
		Attaching Parts		
	AN3-17A	. BOLT	2	
	AN365-1032	. NUT	2	
	AN960D10L	. WASHER	4	
		———*———		
-10	B70771-1	. CONTROL, Parking brake (ARN)	1	J
		Attaching Parts		
	AN316-8R	. NUT, Check	1	J
	AN936A816	. WASHER	2	J
		———*———		
	22E7049-2	. BOLT, Eye	1	J
		Attaching Parts		
	AN316-4R	. NUT	2	J
		———*———		
	22E7049-1	. LINK	2	J
		Attaching Parts		
	AN393-9	. PIN, Flat hd	2	J
	AN393-13	. PIN, Flat hd	1	J
	AN381-2-5	. PIN, Cotter	3	J
	AN960D10L	. WASHER	3	J
		———*———		
-11	22E7010-16	. TUBE ASSEMBLY	1	J

Figure and Index Number	Part Number	Description 1 2 3 4 5 6 7	Units per Assembly	Usable On Code
94-12	22E7010-17	. TUBE ASSEMBLY	1	J
	AN832-4D	. FITTING	2	
	AN924-4D	. NUT	2	
	AN960D716	. WASHER	2	
-13	22E7010-14	. TUBE ASSEMBLY	1	A
	22E7010-64	. TUBE ASSEMBLY	1	E
-14	22E7010-15	. TUBE ASSEMBLY	1	A
	22E7010-65	. TUBE ASSEMBLY	1	E
	AN833-4D	. FITTING	2	
	AN924-4D	. NUT	2	
	AN960D716	. WASHER	2	
-15	22E7010-12	. TUBE ASSEMBLY	1	J
-16	22E7010-13	. TUBE ASSEMBLY	1	J
	AN815-4D	. UNION	2	
-17	22E7010-10	. TUBE ASSEMBLY	1	J
-18	22E7010-11	. TUBE ASSEMBLY	1	J
	AN815-4D	. UNION	2	
-19	22E7010-8	. TUBE ASSEMBLY	1	J
-20	22E7010-9	. TUBE ASSEMBLY	1	J
	AN815-4D	. UNION	2	
-21	22E7010-58	. TUBE ASSEMBLY	1	J
-22	22E7010-59	. TUBE ASSEMBLY	1	J
	AN815-4D	. UNION	2	
-23	22E7010-56	. TUBE ASSEMBLY	1	J
-24	22E7010-57	. TUBE ASSEMBLY	1	J
	AN832-4D	. FITTING	1	J
	AN837-4D	. FITTING	1	J
	AN924-4D	. NUT	2	
	AN960D716	. WASHER	2	
-25	22E7010-52	. TUBE ASSEMBLY	1	A
	22E7010-44	. TUBE ASSEMBLY	1	E
-26	22E7010-53	. TUBE ASSEMBLY	1	A
	22E7010-45	. TUBE ASSEMBLY	1	E
	AN833-4D	. ELBOW	2	
	AN924-4D	. NUT	2	
	AN960D716	. WASHER	2	
-27	F118103-3	. CONTROL, Flexible (ARN)	1	AU
		Attaching Parts		
	AN520DD10-8	. SCREW	3	
	AN530-10-8	. SCREW	1	
	AN364D1032	. NUT	3	
	AN316-10R	. NUT	1	
	A7863-10Z	. NUT, Speed (TIN)	1	
	AN960D10	. WASHER	3	
	AN960D10L	. WASHER	1	
	AN936A1016	. WASHER	1	
		———*———		
	42E7012-1	. BLOCK	1	AU
		Attaching Parts		
	AN23-10A	. BOLT	1	
	AN23-31A	. BOLT	2	
	AN364-1032	. NUT	3	
	AN960-10L	. WASHER	3	
	AN960D10	. WASHER	3	
		———*———		
	18E7002-27	. LINK	1	AU
		Attaching Parts		
	FT319	. FITTING, End (ARN)	1	AU
		———*———		
-28	22E7010-91	. TUBE ASSEMBLY	1	AU
-29	22E7010-74	. TUBE ASSEMBLY	1	AU
	AN832-4D	. FITTING	2	

Figure and Index Number	Part Number	1 2 3 4 5 6 7 Description	Units per Assembly	Usable On Code
94-	AN924-4D	. NUT	2	
	AN960D716	. WASHER	2	
-30	22E7010-93	. TUBE ASSEMBLY	2	AU
	AN833-4D	. FITTING	2	
	AN924-4D	. NUT	2	
	AN960D716	. WASHER	2	
-31	22E7010-89	. TUBE ASSEMBLY	1	D,IS
	22E7010-109	. TUBE ASSEMBLY	1	HI
-32	22E7010-90	. TUBE ASSEMBLY	1	D,IS
	22E7010-107	. TUBE ASSEMBLY	1	HI
	AN815-4D	. UNION	2	
-33	22E7010-77	. TUBE ASSEMBLY	1	D,IS
	22E7010-108	. TUBE ASSEMBLY	1	HI
-34	22E7010-75	. TUBE ASSEMBLY	1	D,IS
	22E7010-110	. TUBE ASSEMBLY	1	HI
	AN815-4D	. UNION	2	
-35	22E7010-10	. TUBE ASSEMBLY	2	AU
	AN815-4D	. UNION	2	
-36	22E7010-73	. TUBE ASSEMBLY	1	AU
-37	22E7010-72	. TUBE ASSEMBLY	1	AU
	AN815-4D	. UNION	2	
-38	22E7010-70	. TUBE ASSEMBLY	1	AU
-39	22E7010-71	. TUBE ASSEMBLY	1	AU
	AN832-4D	. FITTING	2	AU
	AN924-4D	. NUT	2	
	AN960D716	. WASHER	2	
-40	22E7010-98	. TUBE ASSEMBLY	1	AU
	AN815-4D	. UNION	1	
-41	22E7010-78	. TUBE ASSEMBLY	1	AU
-42	22E7010-99	. TUBE ASSEMBLY	1	AU
	AN833-4D	. ELBOW	2	
	AN924-4D	. NUT	2	
	AN960D716	. WASHER	2	

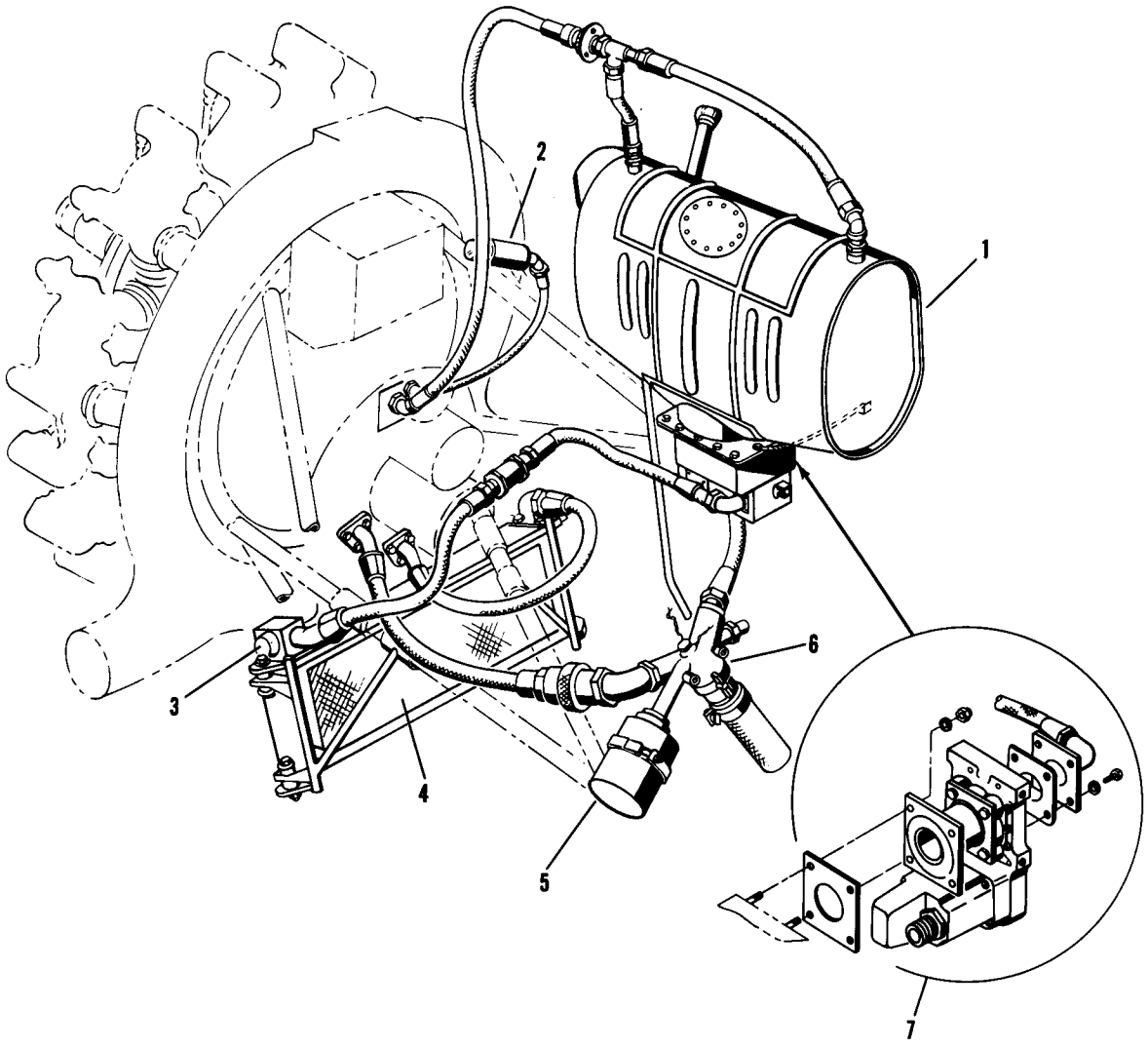

Index No.	Description	Fig. No.
1	Oil Tank	30
2	Oil Pressure Transmitter	76
3	Valve and Body	29
4	Oil Cooler	29
5	Thermostat	29
6	Y-Drain Valve	29
7	Shut-Off Valve	29

Figure 95. Power Plant Oil System

Systems

Index No.	Description	Fig. No.
1	Fuel Pump	28
2	Fuel Transmitter	76
3	Oil Dilution Solenoid	31
4	Fuel System Quick Disconnect	32
5	Fuel Strainer	32
6	Slide Valve (Shut-Off)	32
7	Booster Pump	32
8	Tank Drain Valve	32
9	Fuel Quantity Tank Unit	32
10	Vent System	32
11	Fuel Cell	32
12	Filler Neck	32
13	Fuel Cell Door	32

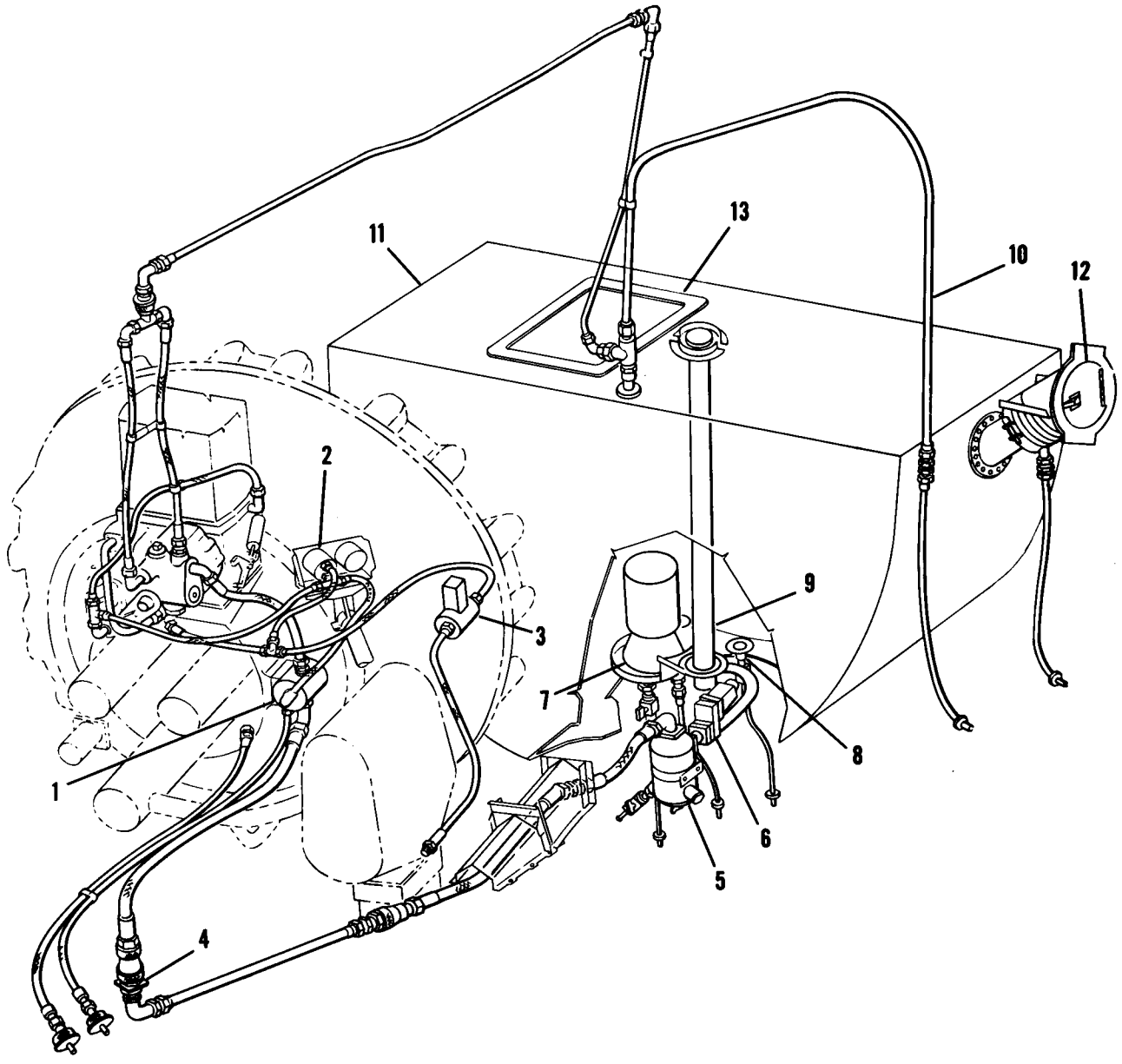

Figure 96. Power Plant Fuel System

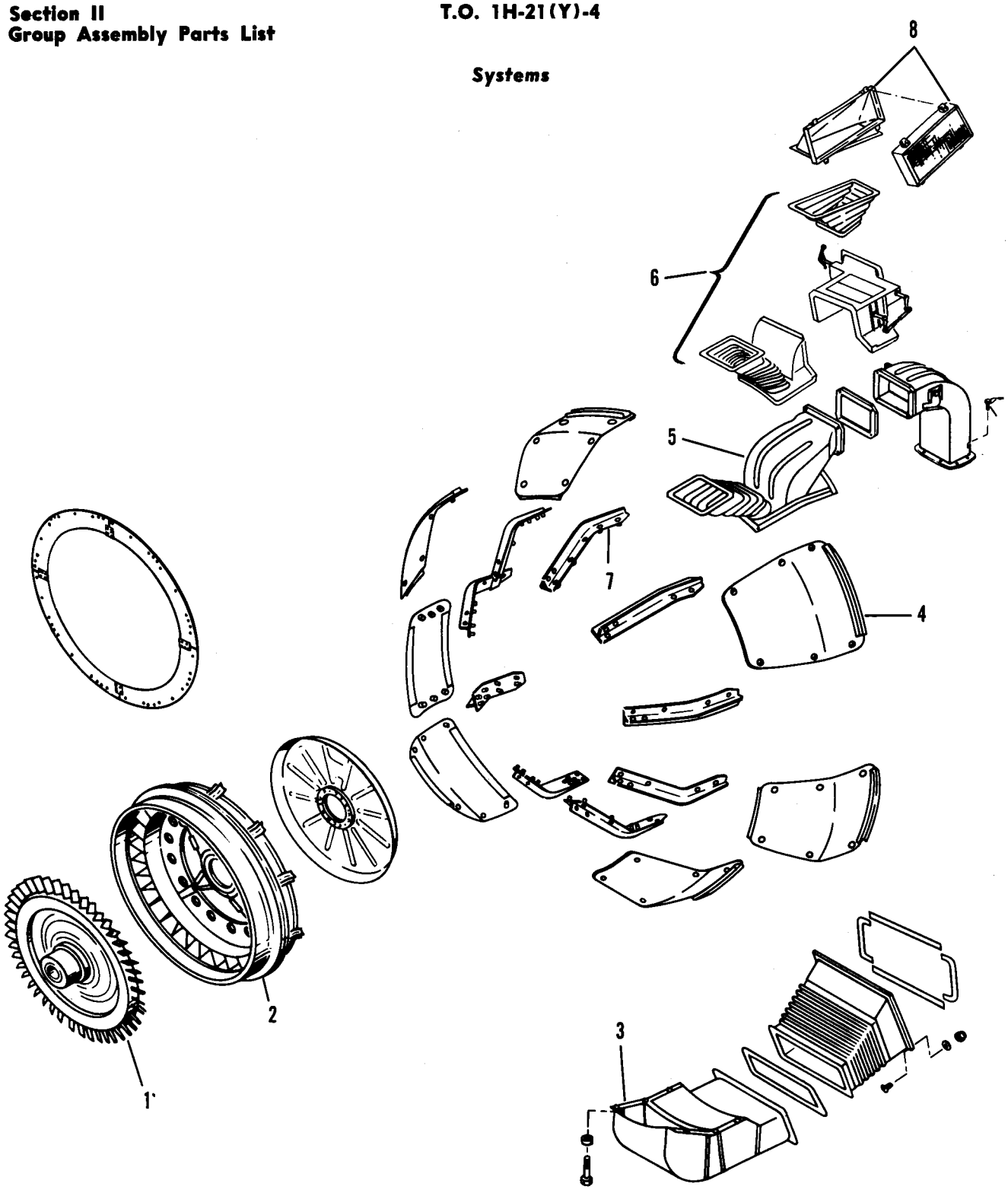

Index No.	Description	Fig. No.
1	Engine Cooling Fan	34
2	Stator	33
3	Oil Cooler Duct	33
4	Engine Cowl Panels	33
5	Transmission and Carburetor Duct, YH-21 and H-21A	33
6	Transmission and Carburetor Duct, H-21B and H-21C	33
7	Cowl Supports	33
8	Corburetor Air Filter	33

Figure 97. Power Plant Cooling System

Systems

Index No.	Description	Fig. No.
1	Fwd Trans Oil Press. Transmitter and Warning Unit	75
2	Forward Transmission	42
3	Forward Transmission Lubrication Piping	46
4	Transmission to Cooler Lubrication Piping	49
5	Central Trans Oil Press. Transmitter and Warning Unit	75
6	Central Transmission and Clutch	41
7	Central Transmission Lubrication Piping	47
8	Transmission Oil Cooler	49
9	Aft Transmission	43
10	Aft Transmission Lubrication Piping	48
11	Aft Trans Oil Press. Transmitter and Warning Unit	75
12	Transmission Lubrication Piping, H-21B and H-21C	49
13	Transmission to Cooler Lubrication Piping, YH-21, H-21A, H-21B, and H-21C	49
14	Transmission to Cooler Lubrication Piping, H-21B and H-21C	49

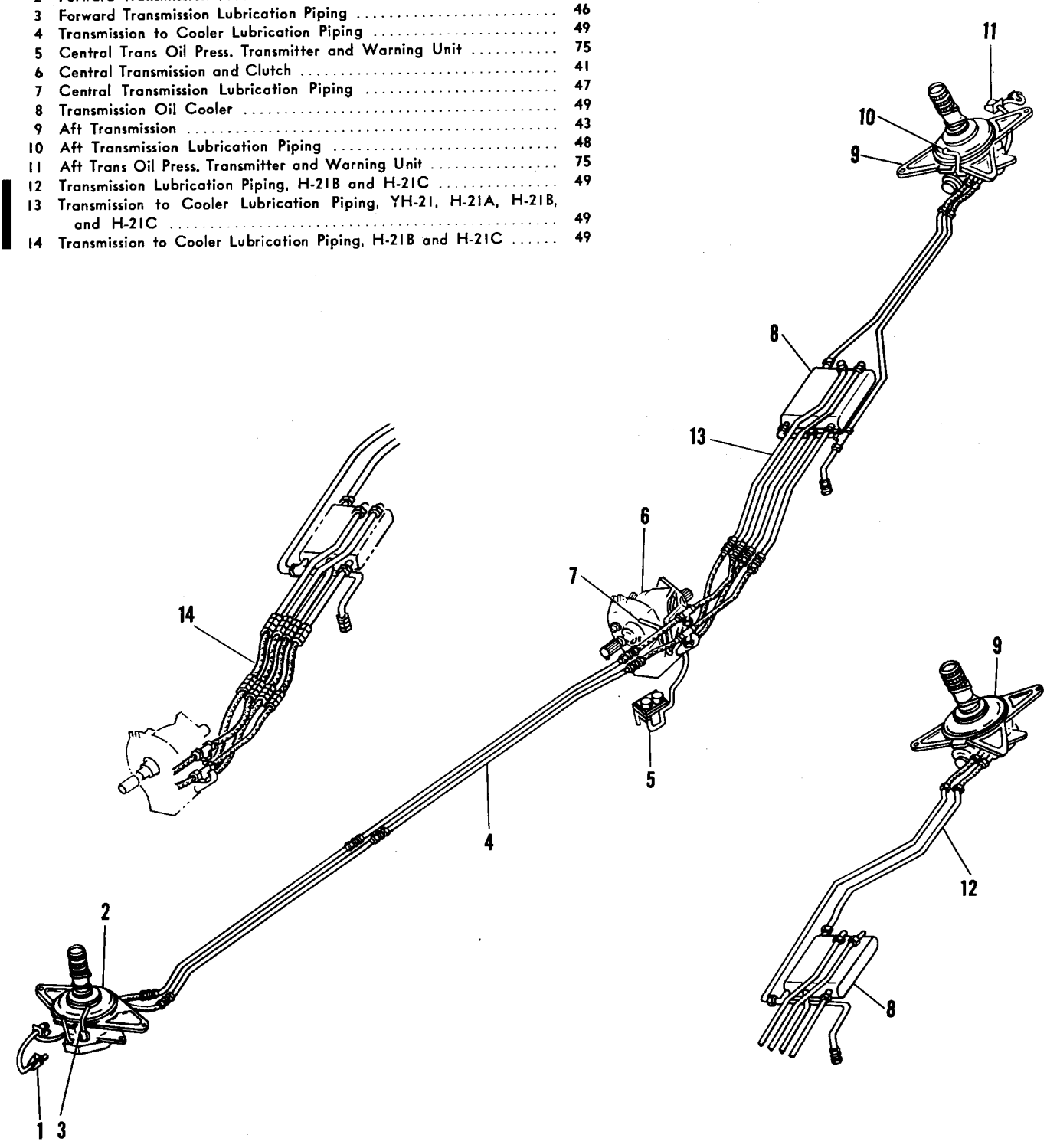

Figure 98. Transmission Lubrication System

Systems

Index No.	Description	Fig. No.
1	Cockpit Controls	51
2	Longitudinal Bungee	69
3	Fwd Upper Flight Control Bellcranks	65
4	Fwd Upper Flight Control Quadrants	64A
5	Fwd Collective Pitch Bungee	67
6	Flight Controls	50
7	Aft Collective Pitch Bungee	68
8	Aft Upper Flight Control Quadrants	66A
9	Aft Upper Flight Control Bellcranks	66B

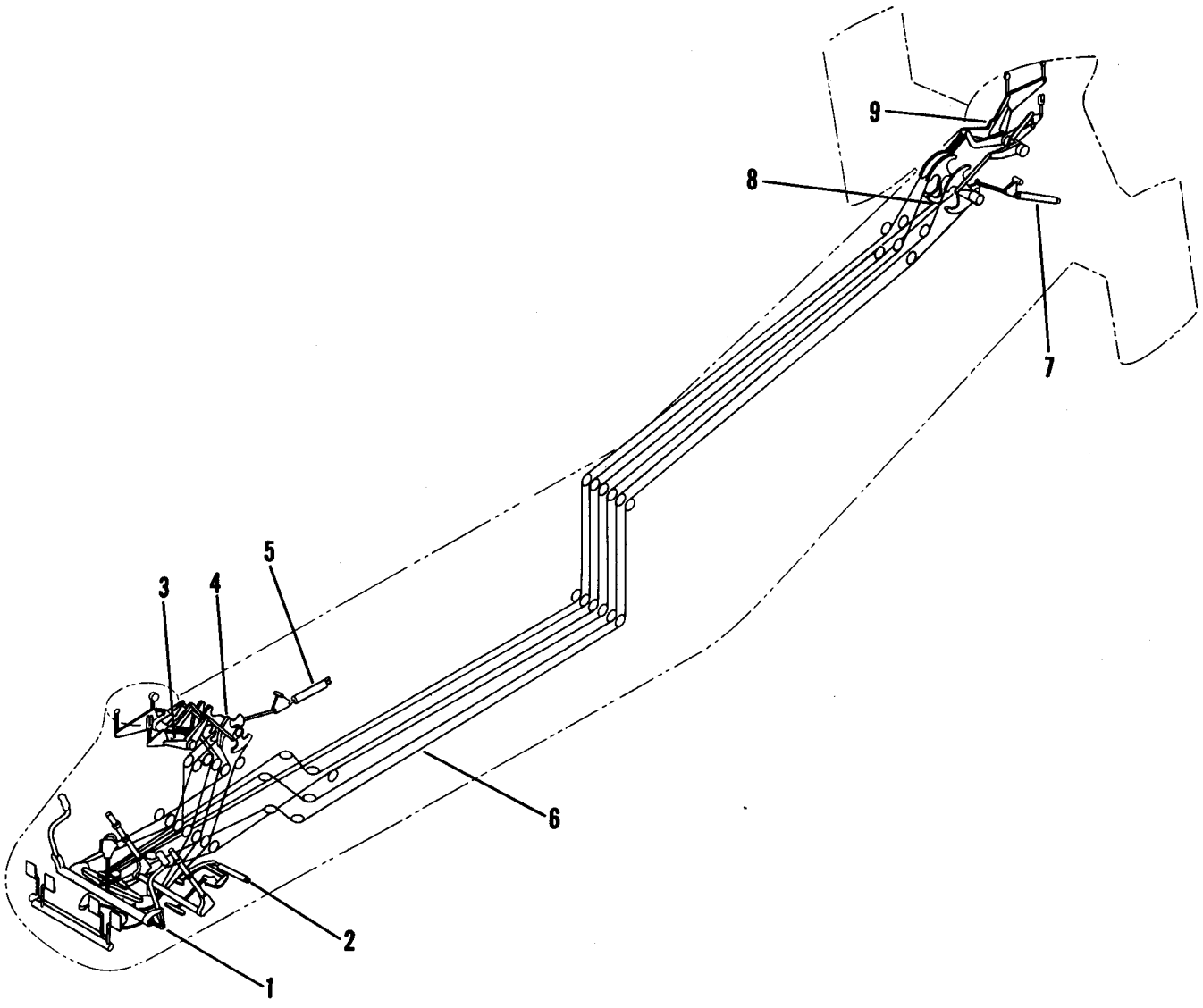

Figure 99. Flight Controls System

Systems

Index No.	Description	Fig. No.
1	Cockpit Engine Controls	72
2	Engine Section Controls	73
3	Throttle Lower Cables	71
4	Throttle Upper Cables	71
5	Mixture Lower Cables	71
6	Mixture Upper Cables	71
7	Carburetor Heat Lower Cables	71
8	Carburetor Heat Upper Cables	71

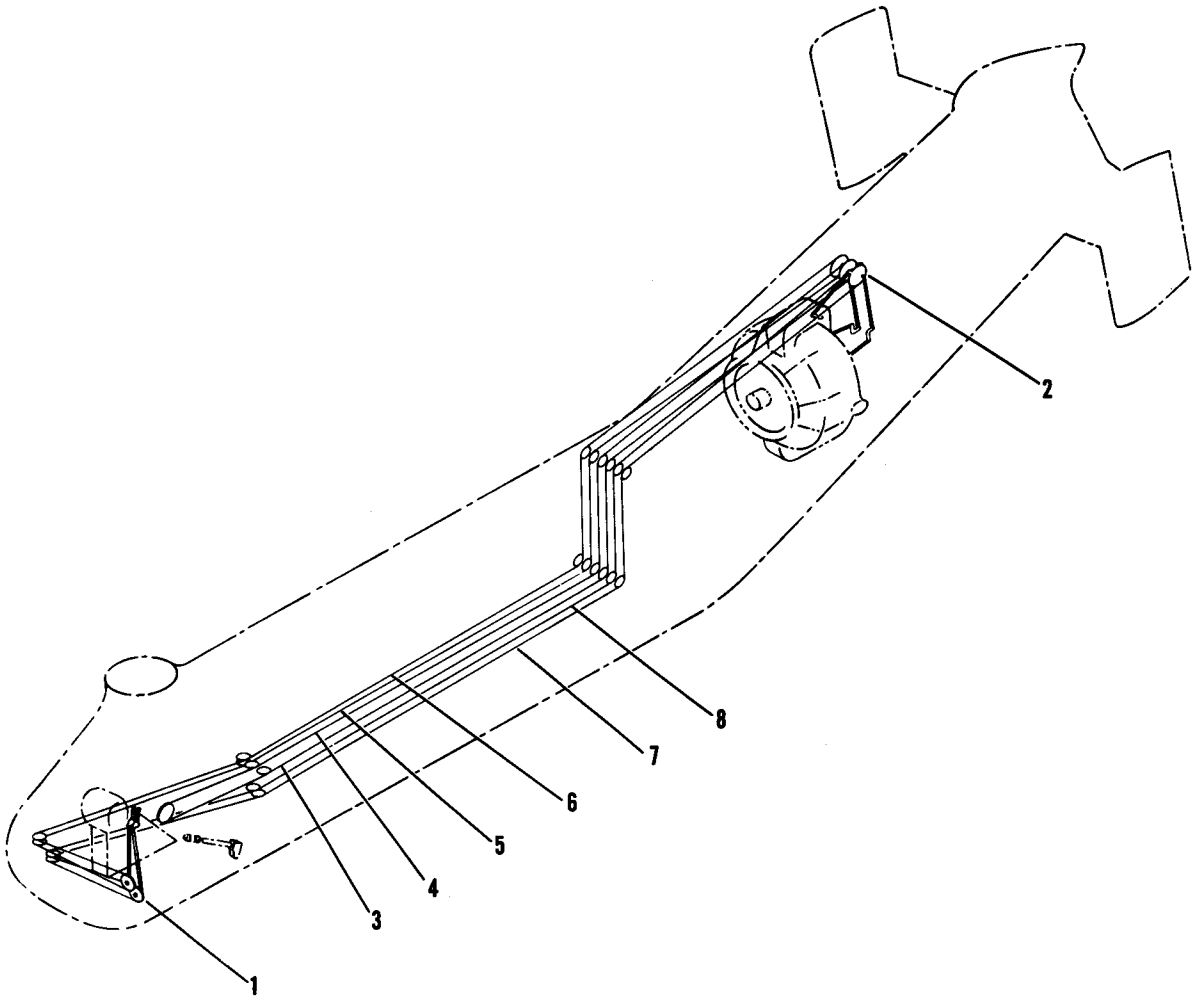

Figure 100. Engine Controls System

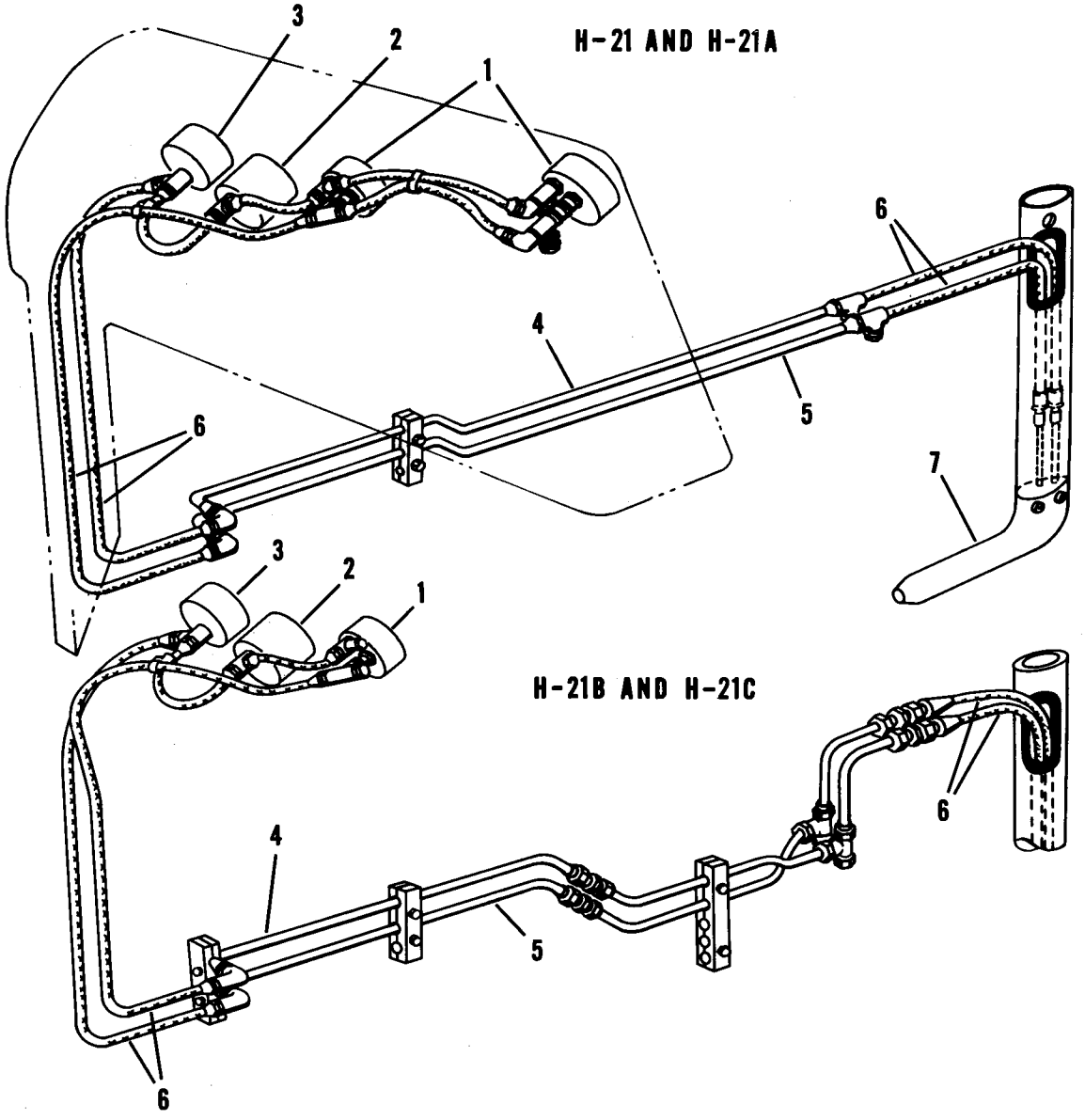

Index No.	Description	Fig. No.
1	Airspeed Indicator	82
2	Rate of Climb Indicator	82
3	Altimeter Indicator	82
4	Static Tube Assembly	83
5	Pitot Tube Assembly	83
6	Hose Assemblies	83
7	Pitot Tube	83

Figure 101. Pitot-Static System

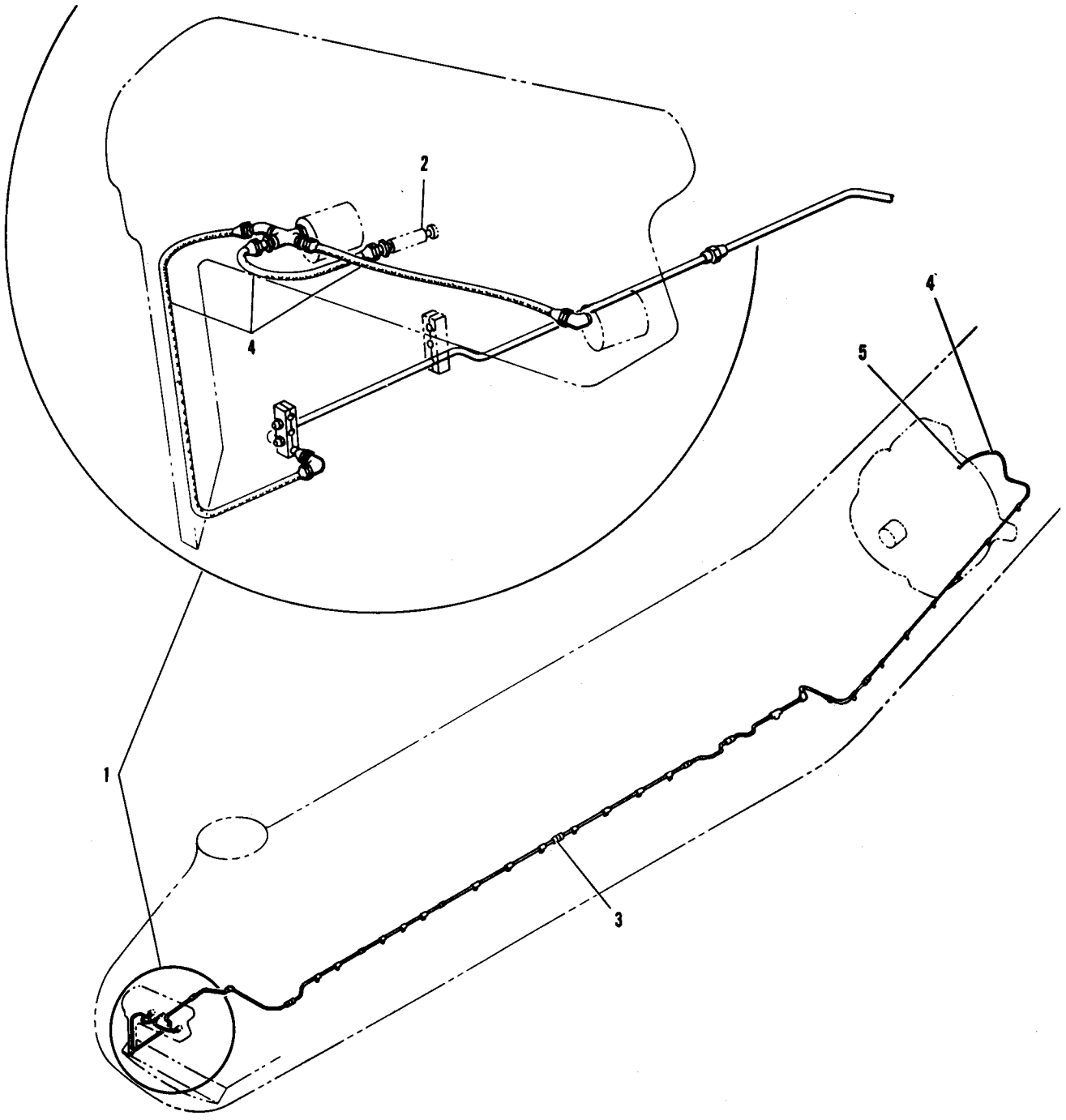

Index No.	Description	Fig. No.
1	Flight Instrument Panel	82
2	Purge Valve	82
3	Manifold Pressure Tube Assembly	84
4	Hose Assemblies	84
5	Restrictor	84

Figure 102. Manifold Pressure System

Systems

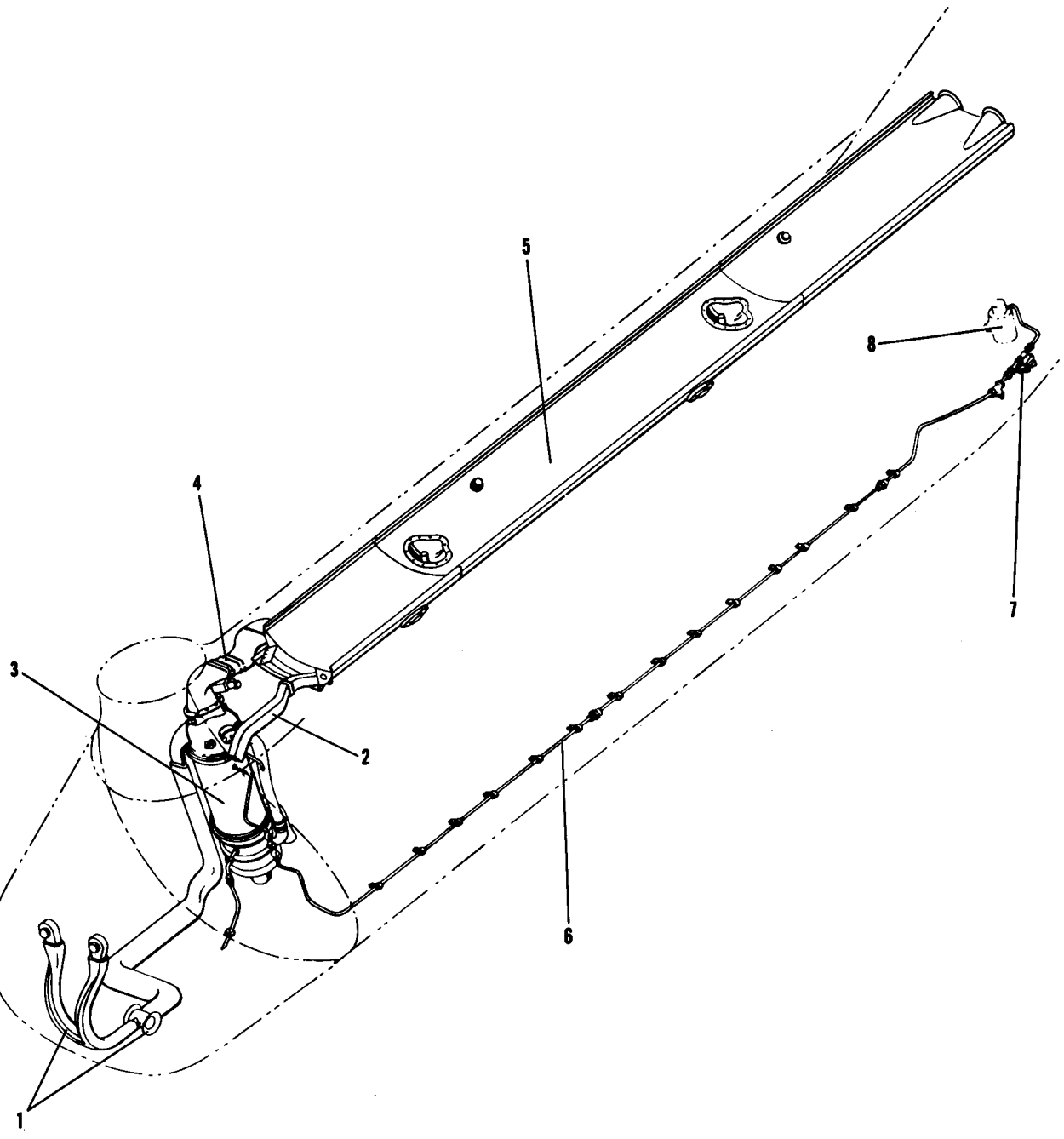

Index No.	Description	Fig. No.
1	Cockpit Ducting	85
2	Fwd Transmission Ducting	85
3	Heater	85
4	Heater to Cabin Ducting	85
5	Cabin Ducting	85
6	Heater Fuel Line	85
7	Solenoid Valve	85
8	Fuel Strainer	32

Figure 103. Heating System

Systems

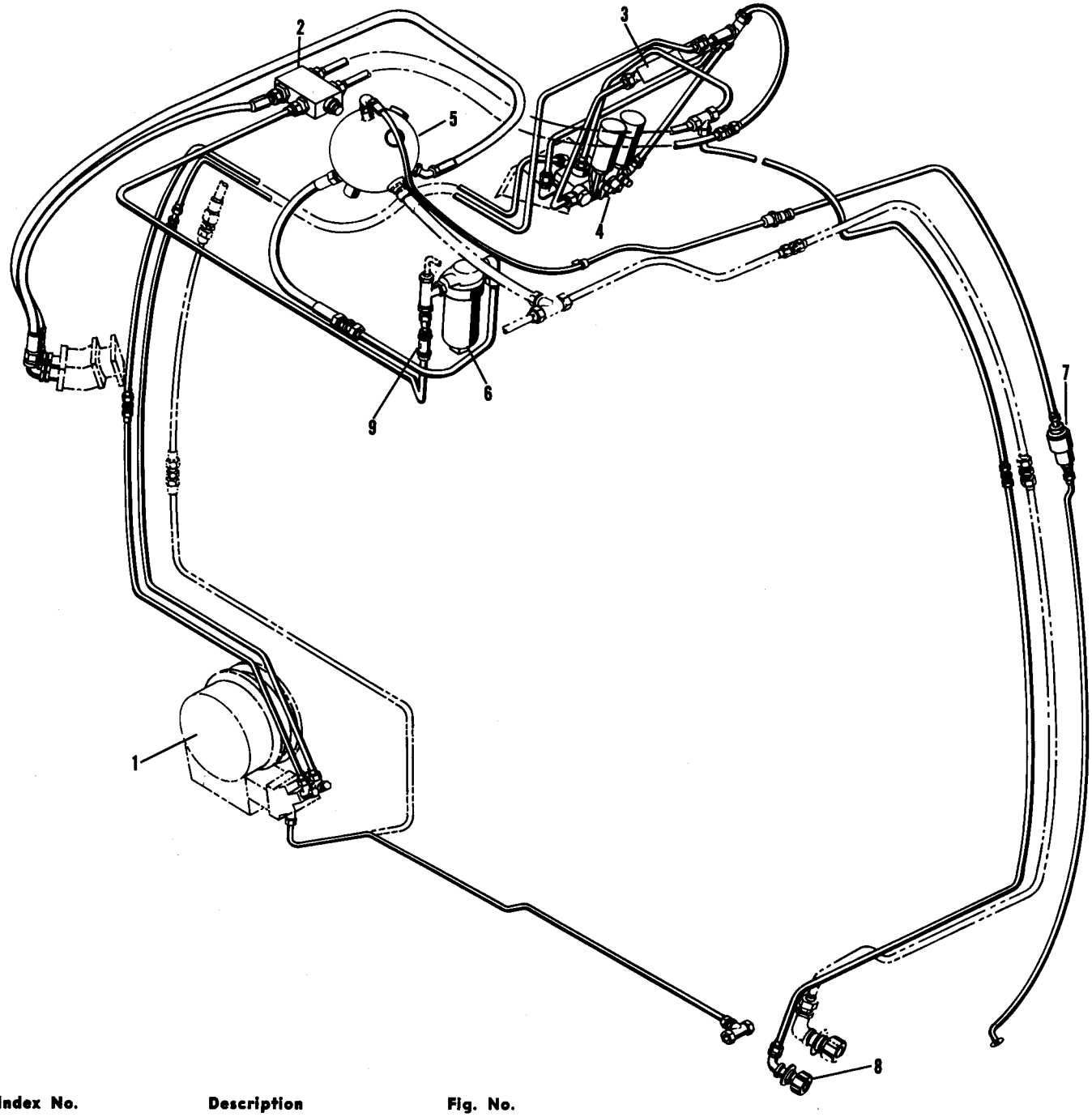

Index No.	Description	Fig. No.
1	Winch	90
2	Relief Valve	91
3	2-Speed Valve	91
4	4-Way Valve	91
5	Reservoir	91
6	Filter	91
7	Filter	91
8	Coupling Half	91
9	Check Valve	91

Figure 104. Hydraulic Hoist System

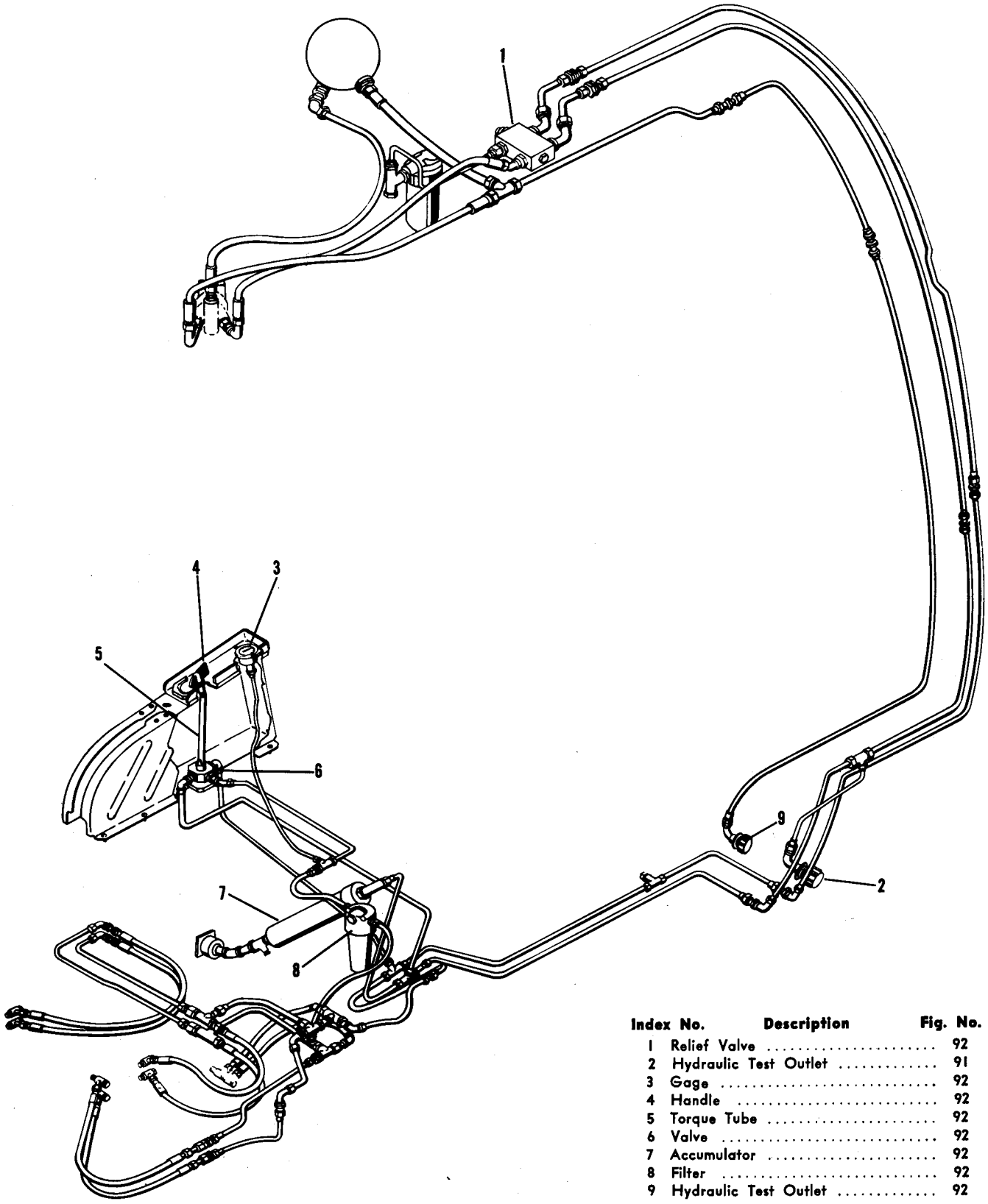

Index No.	Description	Fig. No.
1	Relief Valve	92
2	Hydraulic Test Outlet	91
3	Gage	92
4	Handle	92
5	Torque Tube	92
6	Valve	92
7	Accumulator	92
8	Filter	92
9	Hydraulic Test Outlet	92

Figure 105. Hydraulic Control System, YH-21 and H-21A

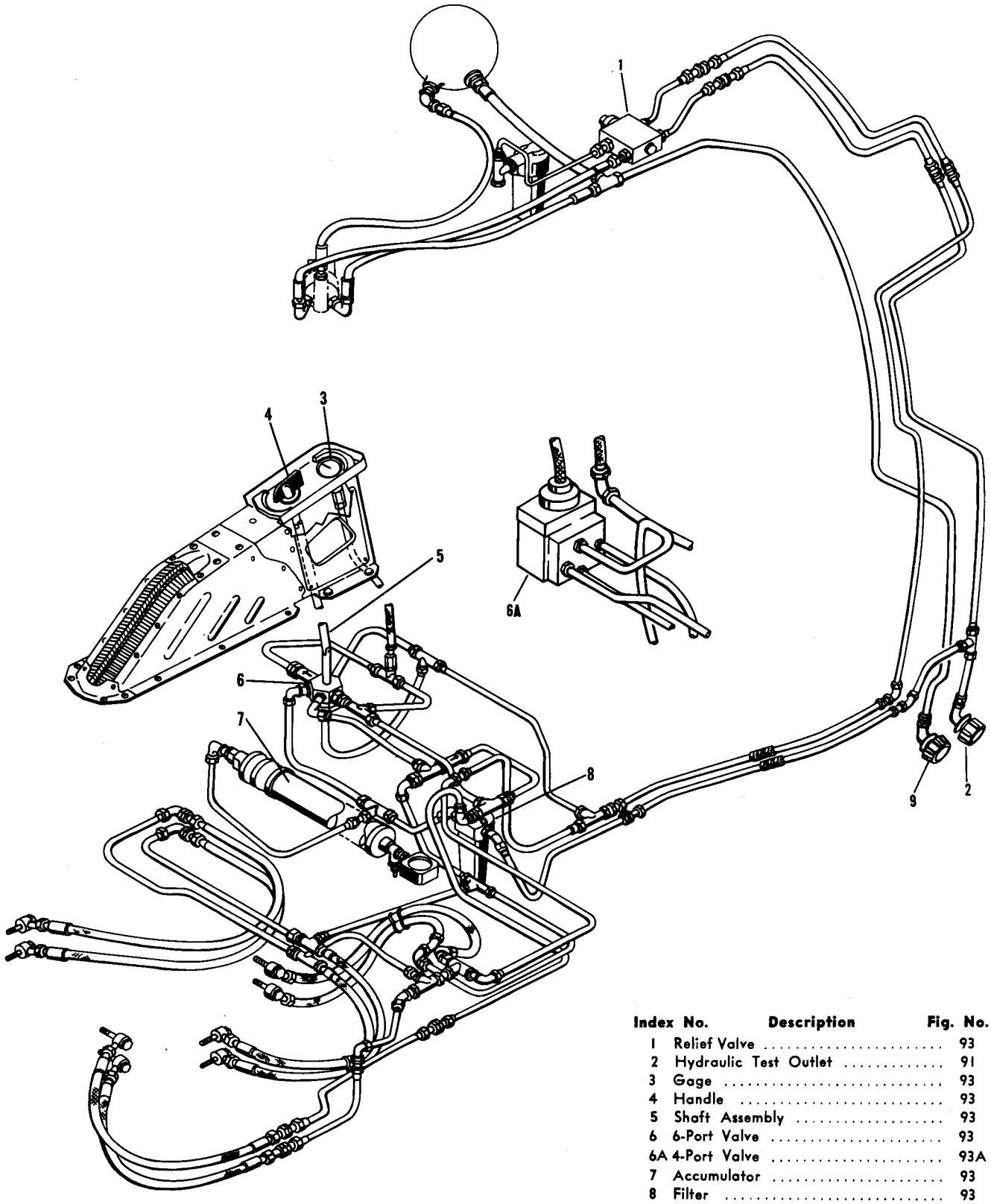

Index No.	Description	Fig. No.
1	Relief Valve	93
2	Hydraulic Test Outlet	91
3	Gage	93
4	Handle	93
5	Shaft Assembly	93
6	6-Port Valve	93
6A	4-Port Valve	93A
7	Accumulator	93
8	Filter	93
9	Hydraulic Test Outlet	93

Figure 105A. Hydraulic Control System, H-21B and H-21C

Index No.	Description	Fig. No.
1	Master Cylinders	94
2	Parking Brake Control	94
3	On-Off Valve	94
4	Tube Assembly	94
5	Hydraulic Brake Lines, YH-21	23 & 94
6	Hydroulic Brake Lines, H-21A, H-21B, and H-21C	24 & 94

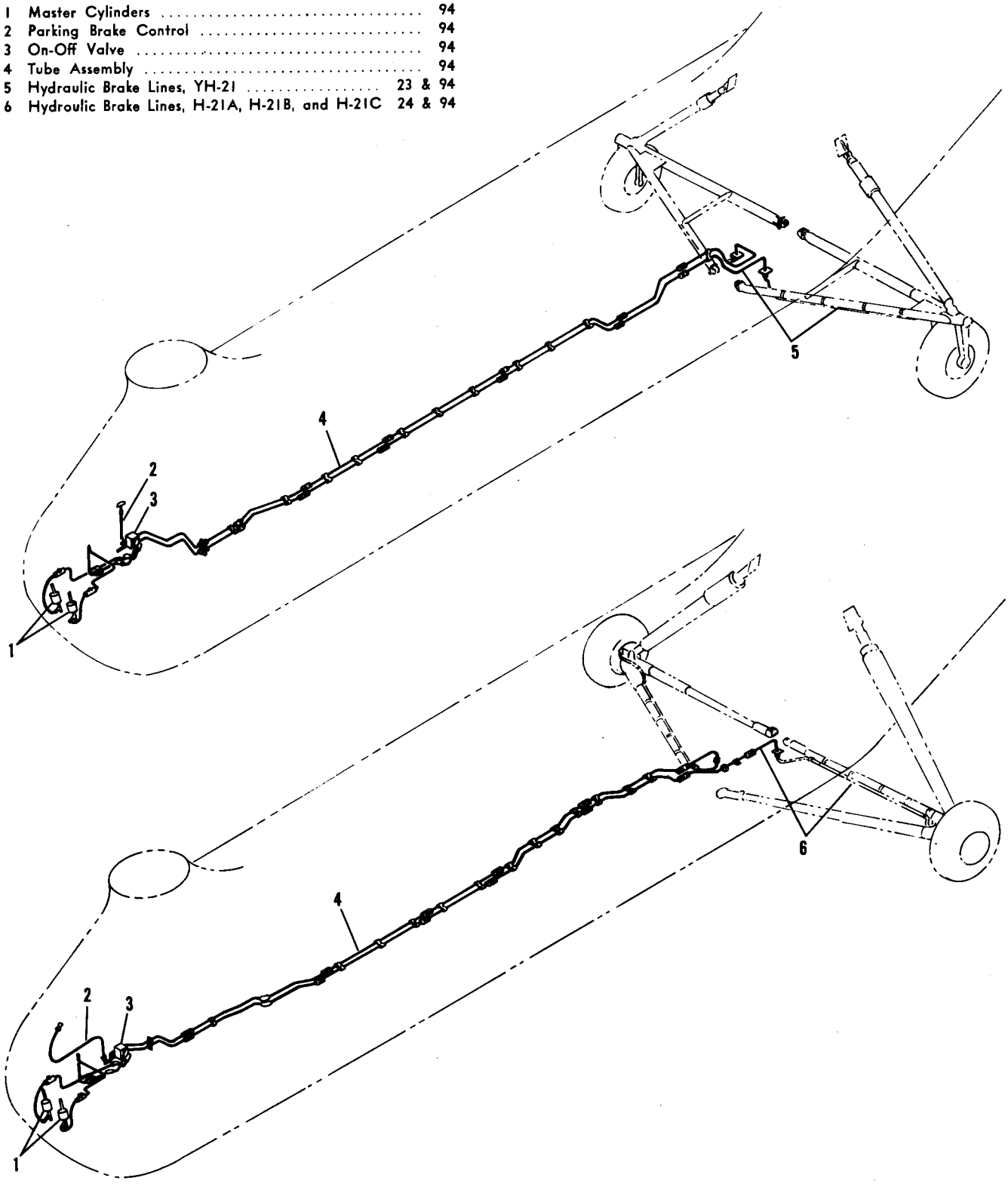

Figure 106. Hydraulic Brakes System

Systems

Index No.	Description	Fig. No.
1	Demountable Fire Detector	39
2	Fuselage Fire Detector	39
3	Fire Detector Control	39

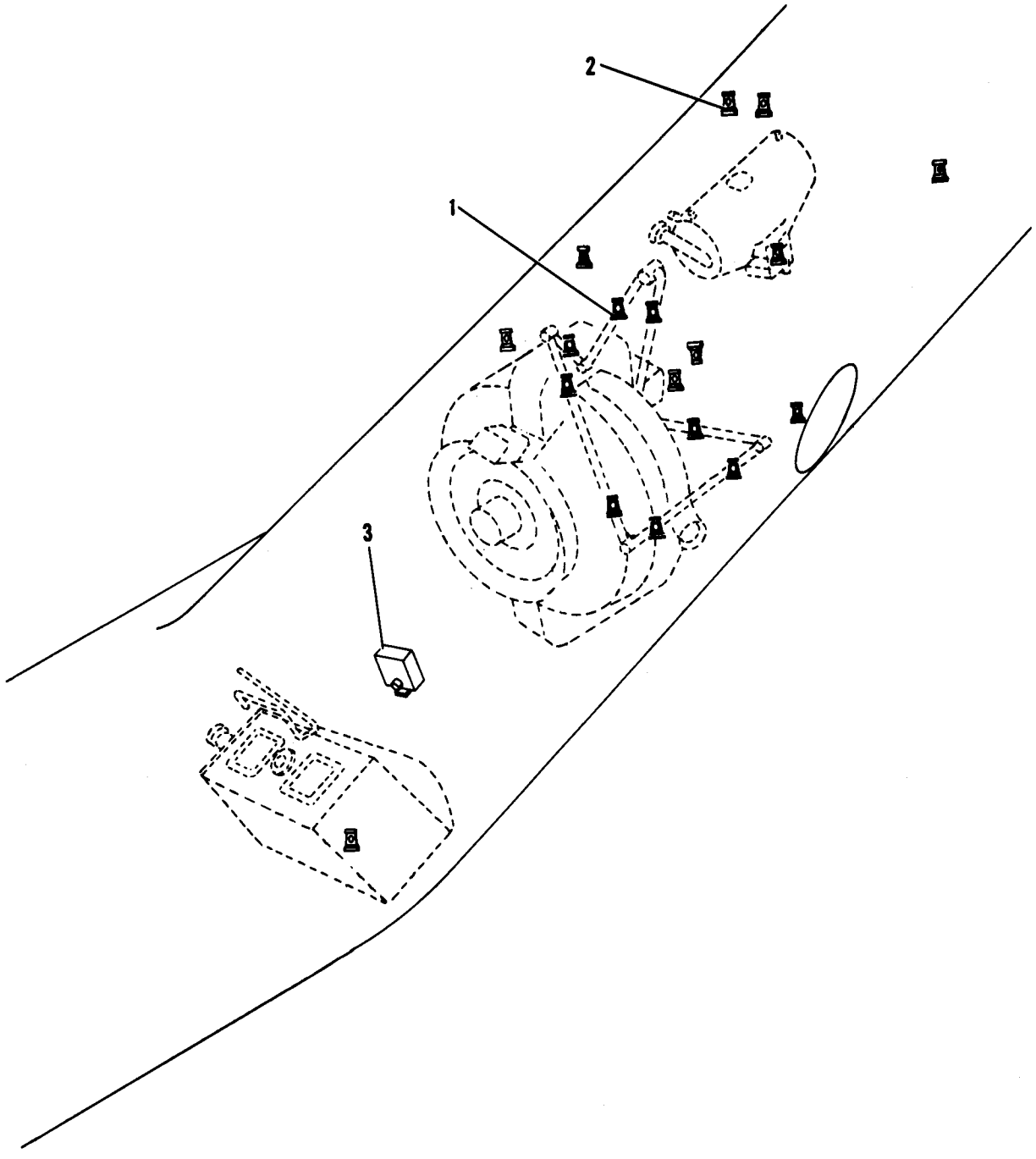

Figure 107. Fire Detection System

SECTION III
NUMERICAL INDEX

AF Class Code or Stock No.	Part Number	Army Source Code	Figure and Index No.	Qty per Article
	No Number		77	1
4606	A-16928		25-13	1
4519	A-2953		80-23	2
	A-6056		86	1
4519	AA-40000		90-13	1
4841	AA-40101		91	1
4841	AA-40101A		91-6	1
4841	AA-40300		91-8	1
	AA40301		91-8	1
	AB-340/ARC		86-47	1
4519	ACA1142-12		89	1
4519	ACA1143-12		89	6
4519	ACA1382		89-5	1
4519	ACA1383		89-6	6
8870	AC0-1		77	8
6001	AC102		82-2	2
6500	AF-21		85	2
	AF216C2-20		26A	3
	AF750-8		58	1
6500	AJ-40		19	12
	AJ3-25		16	6
6500	AJ4-120		15	43
6500	AJ5-100		15-18B	15
6500	AJ5-110		15	8
6500	AJ5-120		15	7
6500	AJ5-35		19	2
6500	AJ5-40		19	6
6500	AJ5-45		19	2
6500	AJ5-50		16	54
6500	AJ5-60		19	10
6580	ALP-509-H-E8-3		6	20
	ALPPH-E8-3		6	12
6580	ALPPH-T6-3		11	8
6580	ALPPH-T6-4		11	2
6580	ALPPH-T6-5		11	2
6580	ALPPH-T8-4		11	6
6580	ALPPH-T8-6		11	6
4508	AL2385		53-41	1
	AM-142/AIC		86-40	4
	AM-300/AIC		86-27	2
6500	AN10-15		25-15	2
6500	AN10-23			8
6500	AN10-24A		43-2	4
6500	AN10-26A		43	4
6500	AN10-27A		43	4
6500	AN10-34		11	2
6590	AN115-16		86	2
6590	AN115-32		90-15	4
6590	AN115-80		88-34	4
	AN1181-6Z-3			184
	AN122987		26A-39	6
6600	AN123878		30A-23	2
6600	AN123892		30-18	1
6600	AN123977		32	2
6500	AN150407		3-93A	12
6500	AN150520		55-23	10
6500	AN150521		55	AR
6590	AN155-16L		71-8	8
6590	AN155-16S		63-30	3
6590	AN155-32L		50-10	12
6590	AN161-16RL		88	2
6590	AN161-16RS		88	2
6590	AN161-32RL		50-11	6
6500	AN165-16S		63-29	1
6500	AN173-10		57-10	1
6500	AN173-10A		8	6
6500	AN173-12A		8	1
6500	AN173-5A		6-15	15
6500	AN173-6A		6-14	5
6500	AN173-7		57-9	1
6500	AN173-7A		8	8
6500	AN174-10A		6A-5	2
6500	AN174-11A		11	18
6500	AN174-13		2-11	19

AF Class Code or Stock No.	Part Number	Army Source Code	Figure and Index No.	Qty per Article
6500	AN174-13A		56-63	2
6500	AN174-14		62-33	6
6500	AN174-14A		56-49	2
6500	AN174-15		54-7	16
6500	AN174-15A		55-14	3
6500	AN174-16		62	6
6500	AN174-17		52	8
6500	AN174-17A		56-50	2
6500	AN174-20		55-63	4
6500	AN174-21		19	81
6500	AN174-21A		57-47	1
6500	AN174-22		54-3	1
6500	AN174-25		57-2	1
6500	AN174-26		4-11	2
6500	AN174-30		64A-15	2
6500	AN174-35A		62-23	1
6500	AN174-41A		61-12	4
6500	AN174-43A		61-1	6
6500	AN174-57		62	1
6500	AN174-6A		6A-12	16
6500	AN174-7A		61-15	4
6500	AN174C10A		6-2	1
6500	AN174H33A		62	1
6500	AN175-10A		6-6	16
6500	AN175-11A		6-7	4
6500	AN175-15		59-13	1
6500	AN175-20		65-69	2
6500	AN175-21		4-36	2
6500	AN175-23A		24-20	1
	AN175-24		64	2
	AN175-25		65	2
	AN175-31		66	1
6500	AN175-32A		62-7	1
6500	AN175-6A		6A-3	4
6500	AN175-7A		6-5	32
6500	AN175C21		4-36	6
	AN175C22		4	1
6500	AN175H33A		62-6	1
6500	AN176-11A		54-8	8
6500	AN176-22		25-8D	1
6500	AN176-23		24-11	8
	AN176-26		65	2
6500	AN176-27		4-3	8
6500	AN176-30		4-13	2
6500	AN176-42		54-18	2
6500	AN176-60		62-48	1
6500	AN176-67A		62-35	1
6500	AN177-11A		26-35	2
6500	AN177-26A		34-10	2
6500	AN177-34		24-17	6
6500	AN177-36		26B-10	2
6500	AN177C16A		6-3	4
6500	AN178-17		25	2
6500	AN178-24		25-1	4
6500	AN179-24		25-2	2
6500	AN180-21A		26-36	2
6500	AN182-54A		25-8C	1
3400	AN200KP4		62	15
3400	AN200KP6		54-25	4
3400	AN200KS3L		57-15	9
3400	AN200KS4		64A-17	8
3400	AN201KP10A		4-28	12
3400	AN201KP12A		4-61	8
3400	AN201KP4A		55-53	23
3400	AN201KP5A		4-8	16
3400	AN201KP6A		4-6	22
3400	AN201KP8A		33	8
3400	AN202KP21B		55-8	2
3400	AN202KP29B		65-7	4
3400	AN207DP4		65-14	14
6500	AN21-10		53-24	4
6500	AN21-12A		52-29	8
6500	AN210-1B		20-2	45
6560	AN210-2B		20-1	37

AF Class Code or Stock No.	Part Number	Army Source Code	Figure and Index No.	Qty per Article
6560	AN210-3B		20-4	26
6560	AN210-4B		20-3	14
6560	AN210-5B		20-14	56
3400	AN218P4		57	4
3400	AN218P5		73	3
	AN219-2		88	3
	AN219-4		88	1
6500	AN22-22		60-10	6
6500	AN22-24A			1
6560	AN220-1		20-41	3
6560	AN220-3		21	1
6700	AN227-1B			13
6700	AN227-10B6			4
6700	AN227-15BS			22
6700	AN227-16B			22
6700	AN227-2B			13
6700	AN227-22BL			6
6700	AN227-25			8
6700	AN227-25BL			16
6700	AN227-4BL			13
6700	AN227-6		18	10
6700	AN227-6B			4
6700	AN227-7		18	8
6700	AN227-7B			4
6700	AN227-8		27	14
6500	AN23-10		63-10	17
6500	AN23-10A		6-10	18
6500	AN23-11A		11-16	19
6500	AN23-12		72-3	1
6500	AN23-12A		6	36
6500	AN23-13		63-8	11
6500	AN23-13A		11-19	30
6500	AN23-14		18	7
6500	AN23-14A		20	17
6500	AN23-15			4
6500	AN23-15A		18	21
6500	AN23-16		18	6
6500	AN23-16A		21	8
6500	AN23-17		52-6	2
6500	AN23-17A		21	5
6500	AN23-18A		21	13
6500	AN23-19A		55-86	6
6500	AN23-20		70-6	1
6500	AN23-20A		53-19	8
6500	AN23-21A		92	4
6500	AN23-22		62	2
6500	AN23-22A		20	1
6500	AN23-23		73-14	2
6700	AN23-23A		62	1
6500	AN23-24		18-7	4
6500	AN23-24A		20	6
6500	AN23-26A		16	4
6500	AN23-27A		20	2
6500	AN23-28A		16	2
6500	AN23-29A		87	8
6500	AN23-30A		52-16A	4
6500	AN23-31A		94	2
6500	AN23-32A		91	4
6500	AN23-34A		20	5
6500	AN23-8		86	1
6500	AN23-8A		11-18	162
6500	AN23-9		63	1
6500	AN23-9A		11-2	86
6700	AN230B10		30A	2
6500	AN24-10A		6-11	22
6500	AN24-11A		11-4	8
6500	AN24-12A		6	48
6500	AN24-13		50	24
6500	AN24-13A		11-6	160
6500	AN24-14A		6-8	8
6500	AN24-15A		11-7	4
6500	AN24-16		11	3
6500	AN24-16A		11-8	15
6500	AN24-17A		20	6
6500	AN24-18		20	4

AF Class Code or Stock No.	Part Number	Army Source Code	Figure and Index No.	Qty per Article
6500	AN24-18A		20	5
6500	AN24-19A		20	4
6500	AN24-20A		21	1
6500	AN24-21		52-27	5
6500	AN24-21A		20	1
6500	AN24-22A		20	3
6500	AN24-24A		26A	12
6500	AN24-25		64A-58	2
6500	AN24-25A		20	2
6500	AN24-26A		69-4	2
6500	AN24-27		66A-64	2
6500	AN24-28		66A-66	5
6500	AN24-28A		20	6
6500	AN24-29		66A	4
6500	AN24-29A		70	3
6500	AN24-30		89	3
6500	AN24-31A		89	33
6500	AN24-46A		87-41	10
6500	AN24-48		64A-19	2
6500	AN24-48A		21	4
6500	AN24-50A		87-31	10
6500	AN24-8A		18	8
6500	AN24-9		13-2	4
6500	AN25-13A			8
6500	AN25-17A		21	1
6500	AN25-21		32B-18	1
8850	AN25-23A		91	1
6500	AN25-24		32B-16	2
6500	AN25-28A			2
	AN25-30		64	1
6500	AN25-31		87-36	4
8850	AN25-34A		91	1
6500	AN25-38		87-54	4
6500	AN25-42		87-53	4
	AN25-48		64	1
	AN253-2-200		13	3
	AN253-2-250		13	1
	AN253-2-3300		19	2
	AN253-2-400		15	14
8850	AN2552-3A		77	1
	AN256F10		32A	9
	AN257HP4-394			2
	AN257HP4-400		15-14	11
	AN257HP5-200			3
	AN257H2-550			1
6500	AN26-18A		21	2
6500	AN26-19A		20	5
6500	AN26-20A		20	2
6500	AN26-21A		20	3
6500	AN26-22A		20	2
6500	AN26-29		90-2	1
6500	AN26-32A		22-41	1
6500	AN26-34A		22-23	1
6500	AN26-36A		20-38	2
6500	AN26-38A		20-39	3
6500	AN26-42A		44	2
6500	AN26-50A		20-15	1
6500	AN26-52A		20-16	2
6500	AN27-58		24A-22	4
6500	AN27-68		12	1
6560	AN270B8		92	1
6560	AN271B10		53-39	2
6500	AN28-25		88-52	1
6530	AN280H204		53-33	1
6530	AN280H304		58-63	1
6500	AN3-10A		20	23
6500	AN3-11A		4-59	22
6500	AN3-13A		60-30	2
6500	AN3-14A		60-22	13
6500	AN3-16A		29	8
6500	AN3-17A		53-6	4
6500	AN3-20			1
6500	AN3-20A		29	6
6500	AN3-21A		52-60	3
6500	AN3-22A			2

AF Class Code or Stock No.	Part Number	Army Source Code	Figure and Index No.	Qty per Article
6500	AN3-23A		83-29	1
6500	AN3-25A			2
6500	AN3-26A		49	8
6500	AN3-3A		5	13
6500	AN3-32A		60-3	1
6500	AN3-4A		10	33
6500	AN3-5			2
6500	AN3-5A		11-29	99
6500	AN3-6A		20-45	59
6500	AN3-60A		20-68	3
6500	AN3-64		20-57	2
6500	AN3-66A		20-63	1
6500	AN3-7A		20-44	18
6500	AN3C3A			21
6500	AN3C4A			68
6500	AN3C5A		85	8
6500	AN3DD10A		83	2
6500	AN3DD12A		83-21	2
6500	AN3DD3A		39	16
6500	AN3DD4A		86	18
6500	AN3DD5A		32A	2
6500	AN3DD6A		86	1
6500	AN3H3A		30-24	20
6500	AN3H4A		32	4
6500	AN3H5		18-11	8
6500	AN3H6		18	8
6500	AN30-54		88-37	2
	AN30-56		88	1
3360	AN3021-1		78-16	9
3360	AN3021-10		78C-39	9
3360	AN3021-11		78C-42	1
3360	AN3021-2		77	6
3360	AN3021-3		78-11	5
3360	AN3021-7		77	2
3360	AN3021-8		80-43	6
3360	AN3022-2		77	2
3360	AN3022-3		80-45	1
3360	AN3023-5		78-39	1
4202	AN3025-2		77	1
3360	AN3027-1		78-37	1
3360	AN3027-2		78-14	1
3360	AN3027-3		78-20	1
4202	AN3027-8		77	1
3360	AN3027-9		78C-41	1
3360	AN3028-1		78-53	11
3360	AN3028-4		78-21	4
4202	AN3030-5A		77-14	8
4202	AN3030-7A		77-15	1
4202	AN3030-8A		77-13	1
4202	AN3033-10		77	2
4202	AN3033-7		77	1
4202	AN3033-8		77	1
4202	AN3037-7A		77	3
4202	AN3040-1B		77	5
4202	AN3040-3B		77	1
4202	AN3040-4B		77	1
4202	AN3042-3		77	1
4202	AN3042-4		77	1
6700	AN3054-4		85	2
8850	AN3057-12		81	1
8850	AN3057-16		81	16
8850	AN3057-20		81	4
8850	AN3057-6A		81	1
6500	AN310-10		4	14
6500	AN310-18		25	2
6500	AN310-3		20	9
6500	AN310-34		12	1
6500	AN310-4		2	193
6500	AN310-5		4	16
6500	AN310-6		3	112
6500	AN310-7		24	116
6500	AN310-8		3	61
6500	AN310-9		25	14
6500	AN310C6		18	1
8850	AN3100A-20-16S		80-27	3
8850	AN3100A-20-18S		80	1
8850	AN3100A-20-27S		80	1
8850	AN3100A-24-28P		81	1
8850	AN3100A-24-28S		81-27	2
8850	AN3100A-28-15S		80	2
8850	AN3100A-28-21S		80	1
8850	AN3100A-32-7S		80	1
8850	AN3100C-10SL-4P		85	1
8850	AN3108A-10SL-4S		85	1
8870	AN3120-1047		77	2
8870	AN3121-313		77	24
4202	AN3122-1524		77	2
8870	AN3124-307		77	2
8870	AN3130-4560		77	2
8870	AN3140-327		80	15
3360	AN3148-1		77	1
6500	AN315-5R		60-8	3
4904	AN3150-2		77-28	1
3350	AN3155-25-100			2
3350	AN3155-25-50		78-62	1
3350	AN3155-25-75		78-57	1
3350	AN3155-50-25		78-44	1
3350	AN3155-50-50		78-56	1
4202	AN3157-6		78-8	10
4202	AN3157-8		78-34	9
4202	AN3158-1			1
6500	AN316-10R		94	3
6500	AN316-12R		26A	6
6500	AN316-4R		17	21
6500	AN316-5R		53	26
6500	AN316-6R		26B-27	18
6500	AN316-8R		64	3
6500	AN316-9R		26A-5	5
6500	AN316C5R		91	1
3360	AN3161P10		80	7
3360	AN3161P15		80	2
3360	AN3161P20		77	2
3360	AN3161P25		77	6
3360	AN3161P35		77	6
3360	AN3161P5		77	31
3360	AN3161P50		77	3
	AN3167-1		77	1
4202	AN3177-1		77	1
4202	AN3177-3		77	1
4202	AN3177-9		77	2
6500	AN320-1		53	4
6500	AN320-10		24A	8
6500	AN320-12		24-22	14
6500	AN320-2		58-70	6
6500	AN320-3		18	70
6500	AN320-4		4	60
6500	AN320-5		32B	22
6500	AN320-6		90	3
6500	AN320-7		12	12
6500	AN320-8		4	17
6500	AN320-9		26	2
6500	AN320C10		88	2
6500	AN320D8		57-25	1
2303	AN3203-V30		78-5	1
3360	AN3211-2		78-54	1
3360	AN3212-1		80-49	1
3320	AN3219-1		78	10
3320	AN3220-3		78	2
3360	AN3226-3		78-18	1
3360	AN3227-1		78-17	1
3360	AN3229-1		80	1
3360	AN3234-1		90	1
4202	AN3303-1		86A-27	1
4202	AN3306-1		77	2
3380	AN3307-1		77	1
3380	AN3311-1		77	7
3380	AN3314-1		81	1
3380	AN3316-1		77	2
4202	AN3324-1		77	1

AF Class Code or Stock No.	Part Number	Army Source Code	Figure and Index No.	Qty per Article
4202	AN3350-2		77	5
3380	AN3370-2		77	2
3380	AN3371-2		77	1
4202	AN3400-2		77	1
4202	AN3400-4		77	3
8880	AN3433-2-2		81	3
8880	AN3434-2		81	2
8880	AN3436-6			2
	AN345-10		3	1
4202	AN3502-1A		81-7	1
6500	AN363-1032		24	24
6500	AN363-428		3A	24
6500	AN363-524		24	24
6500	AN363-632		53	2
6500	AN363C524		29	8
6500	AN364-1016		26	1
6500	AN364-1018		33	2
6500	AN364-1032		3	684
6500	AN364-1032A		11	2
6500	AN364-1216		26B	2
6500	AN364-428		6	188
6500	AN364-428A		11	19
6500	AN364-524		8	11
6500	AN364-524C		73	1
6500	AN364-624		20	31
6500	AN364-632			47
6500	AN364-640		52	8
6500	AN364-720		6	3
6500	AN364-820		12	2
6500	AN364-832		39-7	46
6500	AN364D1032		85	45
6500	AN364D428		74	2
6500	AN364D624		86	8
6500	AN364D832			50
6500	AN365-1018		26	10
6500	AN365-1018A		91	1
6500	AN365-1032		4	893
6500	AN365-1032C		10	1
6500	AN365-1216		25	1
6500	AN365-428		6A	515
6500	AN365-428C		30A	2
6500	AN365-440		80	65
6500	AN365-524		3A	56
6500	AN365-624		9	63
6500	AN365-632		22	175
6500	AN365-720		9	70
6500	AN365-820		11	10
6500	AN365-832		17	208
6500	AN365-918		45	24
6500	AN365B632		81	25
6500	AN365D1032		62	208
6500	AN365D440			62
6500	AN365D524		87	2
6500	AN365D624		74	14
6500	AN365D632		82	16
6500	AN365D832			28
6500	AN365E1032HG3		63	4
6530	AN380-1-2			5
6530	AN380-2-1		87	12
6530	AN380-2-2		13	4
6530	AN380-2-3		22	64
6530	AN380-4-5		19	4
6530	AN381-1-16A		66	1
6530	AN381-1-8		21	4
6530	AN381-2-10		12	59
6530	AN381-2-11		52	1
6530	AN381-2-12		4	135
6530	AN381-2-14		18	9
6530	AN381-2-16		73	2
6530	AN381-2-3		52	1
6530	AN381-2-32		3	6
6530	AN381-2-5		20	29
6530	AN381-2-6		4	60
6530	AN381-2-7		4	20
6530	AN381-2-8		2	192
6530	AN381-3-10		26A	10
6530	AN381-3-12		3	154
6530	AN381-3-14		12	10
6530	AN381-3-16		3	27
6530	AN381-3-18		23	5
6530	AN381-3-20		88	2
6530	AN381-3-8		57	1
6530	AN381-4-14		25	2
6530	AN381-4-16		4	14
6530	AN381-4-18		25	2
6530	AN381-4-20		12	3
6530	AN381-4-22		23	11
6530	AN381-4-24		24	16
6530	AN381-4-32		24	2
6530	AN381-4-36		23	4
6530	AN381C3-12			1
6530	AN386-1-10A		33	2
6530	AN386-1-16A		64A-3	3
6530	AN386-1-20A		66A-4	2
6530	AN386-1-6A		33	9
6530	AN386-1-7A		33	11
6530	AN386-1-8A		33	4
6530	AN386-12		52-10	3
6530	AN386-2-14		52-35	4
6530	AN386-2-16A		65-49	4
6530	AN386-2-17A		55-67	2
	AN386-2-19A		55A-3	2
6500	AN386-2-21A		56-69	2
6530	AN386-3-16A		65	4
6530	AN386-3-21A		65	8
6530	AN386-4-17A		65-41	4
6530	AN386-4-22A		65-26	8
6530	AN392-11		87-14	4
6530	AN392-13		21	4
6530	AN392-17		20	7
6530	AN392-19		20	16
6530	AN392-21		18	5
6530	AN392-23		19-36	10
6530	AN392-25		18	11
6530	AN392-27		20	4
6530	AN392-29		20	4
6530	AN392-31		20	12
6530	AN392-33		20	2
6530	AN392-35		20	6
6530	AN392-37		20	3
6530	AN392-39		20	1
6530	AN392-41		20	2
6530	AN392-43		21	3
6530	AN392-45		20	5
6530	AN392-47		20	4
6530	AN392-49		22-31	4
6530	AN392-51		20	2
6530	AN392-55		22-32	2
6530	AN392-57		20	2
6530	AN392-59		22-34	3
6530	AN392-61		20-6	1
6530	AN392-67		22-33	1
6530	AN392-7		86	5
6530	AN392-9		87-27	5
6530	AN393-11		18	18
6530	AN393-13		88	3
6530	AN393-15		14-4	7
6530	AN393-17		26A	15
6530	AN393-25		64A-31	1
6530	AN393-31		88	2
6530	AN393-33		32B-11	9
6530	AN393-43		32B	8
6530	AN393-47		52-9	2
6530	AN393-53		22-19	3
6530	AN393-55		22-20	2
6530	AN393-65		21	1
6530	AN393-7		87-45	2
6530	AN393-75		22-6	3
6530	AN393-87		20-7	3
6530	AN393-9		32B	5
6530	AN394-11		87	4

AF Class Code or Stock No.	Part Number	Army Source Code	Figure and Index No.	Qty per Article
6530	AN394-33		87	2
6530	AN394-39		30	1
6530	AN394-41		30	1
6530	AN394-43		19-4	12
6530	AN394-53		68	1
6530	AN395-19		57	1
6530	AN395-31		32B-11	1
	AN397-111		30A	2
6530	AN397-69		90-3	1
6530	AN398-29		88	4
	AN398-37		88	1
6500	AN4-10A		9-7	112
6500	AN4-11			4
6500	AN4-11A		9-8	50
6500	AN4-12		11	4
6500	AN4-12A		8	56
6500	AN4-13A		9	31
6500	AN4-14		11	8
6500	AN4-14A		66B-2	8
6500	AN4-15		68-15	6
6500	AN4-15A		19-16	13
6500	AN4-16		69-8	2
6500	AN4-16A		44	6
6500	AN4-17A		23-21	16
6500	AN4-19A		21	1
6500	AN4-20		89	31
6500	AN4-20A		21	1
6500	AN4-21		18	27
6500	AN4-21A		11	14
6500	AN4-22A		87-2	8
6500	AN4-23		21	2
6500	AN4-23A		9	8
6500	AN4-24A		60-24	9
6500	AN4-25A		60-19	7
6500	AN4-27A		34-17	45
6500	AN4-30A		34	43
6500	AN4-31		18A	1
6500	AN4-31A		72-14	1
6500	AN4-32		18	2
6500	AN4-32A		68-10	2
6500	AN4-33A		69	1
6500	AN4-36A		67-17	3
6500	AN4-4A		76-2	4
6500	AN4-5A		30A	12
6500	AN4-53		73-18	1
	AN4-6		11	20
6500	AN4-6A		6-12	113
6500	AN4-62A		80-11	3
6500	AN4-64A		81-12A	2
6500	AN4-7		11	9
6500	AN4-7A		6	22
6500	AN4DD11A		34	36
6500	AN4H10A		22-17	2
6500	AN4H11A		22-18	2
6500	AN4H3A		5	28
6500	AN4H5A		29-26	30
6530	AN402-73		88-69	2
4804	AN4100-1		28-6	1
	AN4114-1		77	1
4502	AN4123-2		30-2	1
6530	AN415-2		90	1
4804	AN4171-20		29	1
4804	AN4171-24		29	1
	AN4181-1		77	1
6500	AN42-13A		92	1
6500	AN42-5A		92	1
	AN42B12A		88	1
6500	AN42B14A		52-16B	4
6500	AN42B4A		86	2
6500	AN43-7A		14-8	4
6580	AN470DD10-12		45	AR
6580	AN470DD8		44	AR
6500	AN5-10A		9-10	18
6500	AN5-11A		9-11	7
6500	AN5-12A		9-12	12

AF Class Code or Stock No.	Part Number	Army Source Code	Figure and Index No.	Qty per Article
6500	AN5-13A		9-13	7
6500	AN5-14A		26D	1
6500	AN5-16A		21	1
6500	AN5-17A		26A-3	5
6500	AN5-20A		32B	2
6500	AN5-22A		65-1	2
6500	AN5-24A		65-2	4
6500	AN5-25A		34-9	6
6500	AN5-26A			8
6500	AN5-27A		44-15	8
6500	AN5-31A		32B-29	2
6500	AN5-37A		32B-30	2
6500	AN5-43		12	1
6500	AN5-46		73-2	1
6500	AN5-47		73	1
6500	AN5-53A		73	1
6500	AN5-6A		33-32A	12
6500	AN5-7A		9-14	12
6500	AN5C15		32B	4
6500	AN5C17		32B	4
6500	AN5DD11A			4
6500	AN5DD36A		87-58	4
6500	AN5H10A		28	2
6500	AN5H36A		30A-13	2
6500	AN5H42A		30-7	2
6500	AN5H43A		30A-14	4
6500	AN5H47		30-8	4
6700	AN500A6-12		75	4
6700	AN500A6-18		93	2
6700	AN500A6-3		4-72	18
6700	AN500A8-5		6	8
4004	AN5008-50A		34-7	1
4004	AN5009-50		34-3	1
6500	AN501-10-12		32	6
6700	AN501A10-4		83-36	4
6700	AN501A10-5		67-13	8
6700	AN501A10-6		93	4
6700	AN501A10-8		92	4
6700	AN501C10-12		82A	4
6700	AN501C10-14		82	2
6700	AN501C10-16		82	2
6700	AN501C10-22		82	2
6700	AN501C10-24		82	2
6700	AN501C10-26		82A	2
6700	AN501C10-28		82A	2
6500	AN502-416-8		30A	52
6700	AN502C10R14		88-55	2
6700	AN505-6-6			16
6700	AN505-6R7		77	6
6700	AN505CR8-10		18	2
6700	AN505C4-10		77	5
6700	AN505C440-10		77	5
6700	AN505C8R		77	1
6700	AN507-1024R6		32	20
6700	AN507-1032-10		27	3
6700	AN507-1032R6		32	3
6700	AN507-440R5		80-2	5
6700	AN507-632-7			4
6700	AN507-632R12		77	6
6700	AN507B632R14		82A	2
6700	AN507B632R16		82	2
6700	AN507C632R10		3	24
6700	AN507C632R6		3	12
6700	AN509-10-16		88	1
6700	AN509-10-4		53-5	2
6700	AN509-10-40			2
6700	AN509-10R11		14	5
6700	AN509-10R12		13	33
6700	AN509-10R15		18-7	6
6700	AN509-10R23		18-8	2
6700	AN509-10R8		3A-6	54
6700	AN509-416R11		18	1
6700	AN509-416R22		15	42
6700	AN509-616-30		12-3	1
6700	AN509-616-32		12-4	1

AF Class Code or Stock No.	Part Number	Army Source Code	Figure and Index No.	Qty per Article
6700	AN509-616R26		12	2
6700	AN509-8R10		18-4	4
6700	AN509DD10R12		88	4
6700	AN510-10-15			2
6700	AN510-10R16		86	6
6700	AN510DD10-10		86	8
	AN510DD10-11			6
	AN510DD10-13			2
	AN510DD10-14			20
6700	AN515-4-10			4
6700	AN515-4-5			44
6700	AN515-6-10		72-7	8
6700	AN515-6-14		86	4
6700	AN515-6-20			4
6700	AN515-6-22		58-11	2
6700	AN515-6-6		53-1B	2
6700	AN515-6-8			14
6700	AN515-6R10		22-15	2
6700	AN515-6R4			99
6700	AN515-6R5		18	11
6700	AN515-6R6		18A	18
6700	AN515-6R7		86	8
6700	AN515-6R8		22-15	22
6700	AN515-8-10		62	35
6700	AN515-8-6		39-6	20
6700	AN515-8-8		39	32
6700	AN515-8R14		86	4
6700	AN515-8R16		86	12
6700	AN515-8R22		86	4
6700	AN515-8R4		88-62	4
6700	AN515-8R5		86	2
6700	AN515-8R6		86	8
6700	AN515-8R7		86	216
6700	AN515-8R8		86	26
6700	AN515B6-12		78	6
6700	AN515B6R10		92	4
6700	AN515B6R12		93	7
6700	AN515B6R14		82A	12
6700	AN515B6R16		81	16
6700	AN515B6R18		82-41	4
6700	AN515B6R20		82	10
6700	AN515B6R22		82A	10
6700	AN515B6R28		82A	6
6700	AN515B6R36		82A	6
6700	AN515B6R8		93	42
6700	AN515DD10-10		86	4
6700	AN515DD10-14		86	4
6700	AN515DD4-4			12
6700	AN515DD6-8		82	12
6700	AN515DD8-6		18-13	14
6700	AN515DD8-8		86	32
6700	AN520-10R10		32A	13
6700	AN520-10R12		86	1
6700	AN520-10R14		86	2
6700	AN520-10R18		86	2
6700	AN520-10R6		86	8
6700	AN520-10R8		86	8
6700	AN520C10-10		86	16
6700	AN520C10-8		86	4
6700	AN520C10R10		86	16
6700	AN520DD10-10		85	68
6700	AN520DD10-11		85	6
6700	AN520DD10-12		86	247
6700	AN520DD10-8		86	12
6700	AN520DD10R8		86	64
	AN520DD832-7			32
	AN520R10-8		26A	3
6700	AN525-10-10		10-4	32
6700	AN525-10-11		11-41	10
6700	AN525-10-12		11-42	29
6700	AN525-10-16			4
6700	AN525-10-18		10-3	12
6700	AN525-10-6		5	6
6700	AN525-10-8		16	32
6700	AN525-10-9		5	48
6700	AN525-10R10		8	176

AF Class Code or Stock No.	Part Number	Army Source Code	Figure and Index No.	Qty per Article
6700	AN525-10R11		8	19
6700	AN525-10R12		10-14	257
6700	AN525-10R13		13	8
6700	AN525-10R14		8	39
6700	AN525-10R16		18A	5
6700	AN525-10R18		15	14
6700	AN525-10R20		15	366
6700	AN525-10R22		15	107
6700	AN525-10R24		15	52
6700	AN525-10R26			8
6700	AN525-10R32		32B	2
6700	AN525-10R44		20	1
6700	AN525-10R8		8	61
6700	AN525-10R9		8	954
6700	AN525-416-10			18
6700	AN525-416-11		11	36
6700	AN525-416-12		11	20
6700	AN525-416-14		11	12
6700	AN525-416R10		18-18	4
6700	AN525-416R11		18-17	2
6700	AN525-416R12		10-5	8
6700	AN525-416R20		15	49
6700	AN525-416R9		18A-18	4
6700	AN525-832R10		17	140
6700	AN525-832R11		17	2
6700	AN525-832R12		17	10
6700	AN525-832R16		93	1
6700	AN525-832R8		16	47
6700	AN525-832R9		17	12
6700	AN525D10-10		33-34	14
6700	AN525D10-14			4
6700	AN525D10-8		32A	2
6700	AN525D10R18			2
	AN525D10R8		16	47
6700	AN525D832-6			8
6700	AN526-1032-12		52-3	4
6700	AN526-1032R22		15	43
6700	AN526-1032R7		92	1
6700	AN526-1032R8		26A	18
6700	AN526-632-10		52-12	3
6700	AN526-632-6		58-21	2
6700	AN526-632-9		52-63	3
6700	AN526-632R6		77	31
6700	AN526-632R7		77	16
6700	AN526-632R8		92	2
6700	AN526-832R8		6	36
6700	AN526C632-8		86	16
6700	AN526C832R9		86	64
6700	AN530-10-8		94	16
6700	AN530-4R8		77	9
6700	AN530-6-6			141
6700	AN530-6-8			4
6700	AN530-8-6		16	207
6700	AN530-8-8		85	81
6700	AN530-8R6			24
6700	AN530-8R8		16	12
6700	AN531-8R10		32	3
6700	AN531-8R14		32-31	4
	AN543-3-6		3-87	4
6700	AN545-3-6		3-87	24
6700	AN545-6-10		3	AR
6700	AN545-6-5		3	AR
6700	AN545-8-10		3	36
6700	AN550-8R5		15	84
	AN5525-1		29-23	1
6700	AN565A8-3		58-29	1
2303	AN5769-1B		93-48	1
2303	AN5771-4B		92-37	3
4502	AN5800-1			1
6103	AN5832-1		26A-6	3
6103	AN5832-2		29	4
6500	AN6-11		88-36	4
6500	AN6-11A		9-20	2
	AN6-12A		9-2	8
	AN6-14A		9	6
6500	AN6-15A		24-49	8

AF Class Code or Stock No.	Part Number	Army Source Code	Figure and Index No.	Qty per Article
	AN6-16A		26B	3
	AN6-17A			1
6500	AN6-22A		22-22	2
6500	AN6-23		41-2	4
6500	AN6-23A		22-23	1
	AN6-30A		26	4
6500	AN6-35A		22-9	1
	AN6-36A		26	4
6500	AN6-44		3-11	2
6500	AN6-45		3-2	2
6500	AN6-51A		20-17	1
6500	AN6-52		3	2
6500	AN6-53		3	2
6500	AN6-55A		22-8	1
6500	AN6-64A		20-65	2
	AN6DD14A		86	4
	AN6DD16A		82	1
	AN6DD17A		82	3
	AN6DD23A		82	3
6500	AN6DD25A		82	1
6500	AN6DD37A		87-59	8
6500	AN6H11A		28	2
	AN6H13A		20	6
4804	AN6200-6AB		92-5	1
4804	AN6200-8AB		91-15	1
4804	AN6207-6		93-38	2
4804	AN6207-8		91-18A	1
6600	AN6227-6		29	4
6600	AN6227B10		26A	6
6600	AN6227B11		26A	3
6600	AN6227B12		26A	3
6600	AN6227B13		26A	3
6600	AN6227B15		26A	6
6600	AN6227B19		26A	3
6600	AN6227B22		46	2
6600	AN6227B25		26A	3
6600	AN6227B40		26A	3
6600	AN6227B8		26A	3
4608	AN6231A3		26A	3
4608	AN6232C2		26A	3
4804	AN6234-2		92-38	1
4804	AN6234-4		91-21	1
4804	AN6240-1		91-26	1
6500	AN6246-25		26A	6
6500	AN6246-8		26A	6
	AN6264-3-35		85-1	1
6600	AN6270-4-13		84-2	1
6600	AN6270-4-14		84-6A	1
6600	AN6270-4-15		83-5	1
6600	AN6270-4-16		83-9D	1
	AN6270-4-16⅝		83-4	1
6600	AN6270-4-18		47	1
6600	AN6270-4-22		83-33	2
	AN6270-4-29		91-24	1
	AN6270-4-30¼		83-27	1
	AN6270-4-30¾		83-10	1
	AN6270-4-31½		83-18	1
	AN6270-4-33		91	2
	AN6270-4-33½		83-21	1
	AN6270-4-33⅜		84-6	1
	AN6270-4-35½		84	1
	AN6270-4-40		83-11	1
	AN6270-4-41½		83-20	2
	AN6270-4-6¼		83-9A	1
	AN6270-4-6½		84-3A	1
	AN6270-4-8¾		83-9	1
	AN6270-4-9½		83-9B	1
	AN6270-4-9¾		84-3	1
	AN6270-4-9⅜		83-8	2
6600	AN6270-6-13		85-18	1
	AN6271-12-17¾		91-19	1
	AN6271-12-33		92-1	1
	AN6271-12-61¼		91-17	1
	AN6271-12-8¾		92-4A	1
6600	AN6271-4-11½		23-22	1
6600	AN6271-4-13⅝		92-42	1
6600	AN6271-4-16		92-47	3
6600	AN6271-4-17		92-43	2
6600	AN6271-4-18		92-53	1
6600	AN6271-4-18½		92-50	2
6600	AN6271-4-9		23-28	2
	AN6271-6-37		92-2	2
	AN6271-6-38½		92-3	1
	AN6271-8-35¾		91-16	1
4804	AN6285D1		92	1
4804	AN6285D2		92	2
4804	AN6287-1		26A-7	4
6500	AN6289-6		93	9
6500	AN6289D12		91	5
6500	AN6289D4		23	9
6500	AN6289D6		92	16
6500	AN6289D8		91	12
6600	AN6290-12		29	15
6600	AN6290-24		29	2
6600	AN6290-3		26A-42	6
6600	AN6290-4		23	28
6600	AN6290-6		26C	17
6600	AN6290-8		26A-40	14
6500	AN6291-12		91	6
6500	AN6291-4		23	10
6500	AN6291-6		92	13
6500	AN6291-8		91	12
6500	AN6291-8D		92	1
6500	AN7-10		25-14	2
	AN7-15A		9-38	8
6500	AN7-16A		9-39	24
6500	AN7-36		24A-12	12
6500	AN7-37		24A-23	2
	AN7C25		32B-23	2
	AN7C54		32B-22	2
	AN734D8		93	1
6500	AN735-36		86	1
6500	AN735-40		86-9A	1
6500	AN735-6		32	4
6500	AN735D6		32	3
6500	AN737-38		32A	4
6500	AN737-44		29	1
6500	AN737-46		32A	4
6500	AN737-74		85	2
6500	AN737-82		85	2
6500	AN737RM22		32	1
	AN737RM74		28	4
6500	AN737RM82		85	2
6500	AN737TW74		28	1
6500	AN74-10		32	1
6500	AN74-4		32	16
6500	AN74-5		32	54
6500	AN74-6		32	18
6500	AN74-7		32	60
6500	AN74A6		33-2	24
6500	AN741HTD-19		54-65	1
6500	AN741TD16		28	4
6500	AN742-10C		28	6
6500	AN742D10C		83	76
6500	AN742D11C		38	21
6500	AN742D12C		47-5	42
6500	AN742D13C		31	7
6500	AN742D14		48	1
6500	AN742D14C		46-8	19
6500	AN742D16			6
6500	AN742D17C		27	2
6500	AN742D18C		46	1
6500	AN742D18CB		85	1
6500	AN742D22C		32A	20
6500	AN742D30C		27	5
6500	AN742D34C		28	4
6500	AN742D36C		28	4
6500	AN742D42		85	4
6500	AN742D46C		28	2

AF Class Code or Stock No.	Part Number	Army Source Code	Figure and Index No.	Qty per Article
6500	AN742D54C		28	1
6500	AN742D6CB		83	106
6500	AN742D8		32	1
6500	AN742D8C			29
6500	AN742D8CB			110
8800	AN749-3-3		31	7
8800	AN749-3-5		32	6
8800	AN749-3-8		29	1
4608	AN7502-23		24-35	2
4608	AN7503-23		24-36	2
4502	AN7508-1A		90	1
4502	AN7516-1		15-11	28
8800	AN752-1-6		41	1
6500	AN756D12		30A	2
6500	AN756D16		32	2
6500	AN759-12		32A	2
6500	AN759-16		32A	2
6500	AN760D16		32-12	1
6500	AN760D24		32A	1
6500	AN761D12		30A-4	2
6500	AN762D12		32	2
6500	AN762D16		32	2
	AN763-12		32A	2
6500	AN763-16		32	4
6500	AN763-20		29	2
6500	AN763-24		29	3
6500	AN763-32		29-30	1
6500	AN775-10D		46	3
6500	AN775-4		92	10
6500	AN775-8		91	2
6500	AN775-8D		47	3
6500	AN776-10D		48	2
6500	AN776-4D		92	4
6500	AN776-8D		91	2
6500	AN777-10D		46-9	3
6500	AN777-8D		47-9	1
6500	AN778-4D		92	4
6500	AN778-8D		48-13	1
6500	AN783D3		32-59	1
6500	AN783D6		91-36	2
6500	AN783D8		32A	1
6500	AN784D12		29-32	1
6500	AN784D4		24-32	7
6500	AN784D6		92	3
6500	AN784D8		91	1
6500	AN8-22		88-40	1
6500	AN8-22A		27	3
6500	AN8-23A		27-1	2
6500	AN8-24A		27	1
6500	AN8-26		3-7	6
6500	AN8-26A			2
6500	AN8-31		3-6	4
6500	AN8-36A		41	2
4502	AN8011-1		74	1
4502	AN8018-1		74	8
4502	AN8019-1		74	1
4502	AN8020-1		74	1
4502	AN8021-1		74	3
6500	AN804-10D		49	2
6500	AN804-4		31	1
6500	AN804-8D		48-6	1
6500	AN804D4		84-4A	1
6500	AN804D6		92	3
	AN804D8		91	1
6500	AN806D10		49-21	2
6500	AN814-4D		32	1
6500	AN814-4DL		32	3
6500	AN815-10D		47-14	15
6500	AN815-12D		91	4
6500	AN815-16D		32	2
6500	AN815-4D		23-23	29
6500	AN815-6		32	1
6500	AN815-6D		92	11
6500	AN815-8		32-39	1

AF Class Code or Stock No.	Part Number	Army Source Code	Figure and Index No.	Qty per Article
6500	AN815-8D		48	12
6500	AN816-16-12		31	1
6500	AN816-3D		85	1
6500	AN816-4		31	4
6500	AN816-4D		29	10
6500	AN816-6		31-5	2
6500	AN816-6-2		31	1
6500	AN818-10D		49	2
6500	AN818-16D		26A	3
6500	AN818-2D		26A	3
6500	AN818-4		28	1
6500	AN818-5		28	1
6500	AN818-6		28	1
6500	AN819-10D		49	2
6500	AN819-2Z		26A	3
6500	AN819-4		28	1
6500	AN819-5		28	1
6500	AN819-6		28	1
6500	AN821-4D		83-12	3
6500	AN821-8D		93	2
6500	AN822-16-12		31	1
6500	AN822-4		28-14	3
6500	AN822-4D		75-6	4
6500	AN822-6-2		31	1
6500	AN823-12D		29	1
6500	AN823-16-12		31	1
6500	AN823-4		28	4
6500	AN823-4D		83	1
6500	AN823-6		85	1
6500	AN824-10D		49-8	3
6500	AN824-12D		91	1
6500	AN824-16D		32-13B	1
6500	AN824-4		28-11	2
6500	AN824-4D		26B-43	4
6500	AN824-6D		92	3
6500	AN824-8D		32A-15	1
6500	AN825-4		28-17	1
6500	AN825-4D		83	4
6500	AN826-4		31-15	3
6500	AN826-4D		75	3
6500	AN832-10D		49	6
6500	AN832-12D		30-21	3
6500	AN832-16D		32-24	2
6500	AN832-4		28	1
6500	AN832-4D		84	8
6500	AN832-5		28	1
6500	AN832-6		28	8
6500	AN832-6D		32A	6
6502	AN832-8		32-55	1
6500	AN832-8D		32-63	6
6500	AN833-10D		49-12	3
6500	AN833-12D		49-16	2
6500	AN833-16D		32-6D	1
6500	AN833-3		85	1
6500	AN833-4		28-9	5
6500	AN833-4D		26A	18
6500	AN833-5		28	1
6500	AN833-6		28	3
6500	AN833-6D		47-1	16
6500	AN833-8		32-55	1
6500	AN833-8D		32A-17	8
6500	AN834-10D		49-26	1
6500	AN834-4		31-17	1
6500	AN834-4D		26A-19	4
6500	AN834-6D		47-3	6
6500	AN834-8D		47-12	2
6500	AN837-10D		46-15	9
6500	AN837-12D		30-22	3
6500	AN837-4		31	6
6500	AN837-4D		23-27	9
6500	AN837-6D		92	9
6500	AN837-8D		46-1	14
6500	AN893-12D		92	2

AF Class Code or Stock No.	Part Number	Army Source Code	Figure and Index No.	Qty per Article
6500	AN893-14D		32	1
6500	AN893-16D		91	1
6500	AN893-19D		46	4
6500	AN893-2D		92	4
6500	AN893-20D		46	2
6500	AN893-3D		48	1
6500	AN893-5D		32	1
6500	AN894-12-10D		49	4
	AN894-4D4-3		85	1
	AN894D12-8		91	1
6500	AN894D6-4		92	4
6500	AN894D8-6		32A	1
6700	AN900-10		29	1
6700	AN900-16		29	1
6700	AN900-7		28	2
6700	AN901-10C		46	8
6700	AN901-4A		92	20
6700	AN901-8A		91	10
6700	AN901-8C		47	2
6600	AN902B10		46	12
6600	AN902B12		48	11
6600	AN902B4		47	2
6600	AN902B6		47	4
6600	AN902B8		46	31
	AN906-16		29	1
6500	AN910-1D		83-1	5
6500	AN911-1D		82	9
6500	AN912-3		35	2
6500	AN916-1D		29	4
6500	AN917-1D		75	2
6500	AN918-1D		84-4	1
6500	AN919-1		31	1
6500	AN919-10D		91	1
6500	AN919-12D		92	2
6500	AN919-18D		91	1
6500	AN919-19D		91	3
6500	AN919-2		26A-41	6
6500	AN919-2D		26B-24	1
6500	AN919-20D		46-16	7
6500	AN919-27D		32A	1
6500	AN919-3		28	2
6500	AN919-6		28	2
6500	AN919-6D		85	5
6500	AN924-10D		46	16
6500	AN924-12D		29	5
6500	AN924-16D		32	8
6500	AN924-24D		27	2
6500	AN924-3		85	1
6500	AN924-4		28	9
6500	AN924-4D		23	28
6500	AN924-5		28	2
6500	AN924-6		28	5
6500	AN924-6D		32A	24
6500	AN924-8		32	1
6500	AN924-8D		32A	13
6500	AN926-12D		91	1
6500	AN926-6		28-20	1
6500	AN926-6D		93	2
6500	AN926-8D		48-8	1
6500	AN927-12D		91	1
6500	AN927-16D		32	1
6500	AN927-6D		32A-12	1
6500	AN927-8D		91	2
6500	AN928-6D		93	1
6500	AN929-10		49	4
6500	AN929-10D		49	2
6500	AN929-16		32	1
6500	AN929-2		29	4
6500	AN929-3		85	1
6500	AN929-4		83	10
6500	AN929-8D		32-64	1
	AN931-16S22		32-26	1
	AN931-20S30		32A	2

AF Class Code or Stock No.	Part Number	Army Source Code	Figure and Index No.	Qty per Article
6600	AN931-4-7		28-27	13
6600	AN931-5-9		28	5
6600	AN931-6-10		28-28	7
6600	AN931-8-13		32-41	2
6600	AN931-8S20		32A	1
6600	AN931A7S11			1
6600	AN931A8-13		54-30	2
6600	AN931B4-7		79-8	1
6600	AN931B9S13		79-7	1
	AN933D6		92	1
6700	AN935-10L		86	8
6700	AN935-416		17	1
6700	AN935-716L		26A	6
6700	AN936A1016			2
6700	AN936A6		58	2
6700	AN936A8		88	6
6700	AN936A816		94	2
6700	AN936B10		86	4
	AN937-8D		46	1
6500	AN938-5		28	1
6500	AN938-6		31-20	1
6500	AN938D16		32-6C	1
6500	AN938D4		85	1
6500	AN938D6		92	1
6500	AN939-6		32-48	1
	AN939-8D		32A	2
6500	AN939D8		91	2
6500	AN941D4		92	1
	AN945-6P		18	1
	AN955-3		55-5	2
6500	AN960-10		4	273
6500	AN960-10L		13	161
6500	AN960-1016		23	21
6500	AN960-1016L		24A-3	12
6500	AN960-1216		24	36
6500	AN960-1216L		88	2
6500	AN960-1616			2
6500	AN960-1816			1
6500	AN960-4		87	51
6500	AN960-416		2	280
6500	AN960-416L		3	79
6500	AN960-516		6A	192
6500	AN960-516L		4	26
6500	AN960-6		52	20
6500	AN960-6L		53	8
6500	AN960-616		3	69
6500	AN960-616L		41	1
6500	AN960-716		6	35
6500	AN960-716L		6	AR
6500	AN960-8			17
6500	AN960-8L			18
6500	AN960-816		3	68
6500	AN960-816L		28	9
6500	AN960-916		25	21
6500	AN960-916L			18
6500	AN960A416L		26A	32
6500	AN960A716L		26A	6
6500	AN960C10		16	53
6500	AN960C10L		18	39
6500	AN960C1016		88	4
	AN960C1016L		88	2
6500	AN960C1216		25	1
6500	AN960C4		18	8
6500	AN960C416		89	20
6500	AN960C416L		18	16
6500	AN960C516		36	36
6500	AN960C616		18-13	2
6500	AN960C716		53-30	3
6500	AN960C816		88	10
6500	AN960D10		6-18	1352
6500	AN960D10L		4	3010
6500	AN960D1016		4	25
6500	AN960D1016L		12	2

AF Class Code or Stock No.	Part Number	Army Source Code	Figure and Index No.	Qty per Article
6500	AN960D1216		32	2
6500	AN960D1416		49	15
6500	AN960D1716		49	1
6500	AN960D4		20	139
6500	AN960D4L		20	18
6500	AN960D416		4	1276
6500	AN960D416L		9	459
6500	AN960D516		6	212
6500	AN960D516L		6	4
6500	AN960D6		20	234
6500	AN960D6L		20	143
6500	AN960D616		4	211
6500	AN960D616L		4	25
6500	AN960D716		9	33
6500	AN960D716L		9	4
6500	AN960D8		16	124
6500	AN960D8L		6	664
6500	AN960D816		6	21
6500	AN960D816L		26	4
6500	AN960D916		26	18
6500	AN960D916L		93	2
6500	AN960PD10		21	15
6500	AN960PD10L		21	21
6500	AN960PD1016		26B	2
6500	AN960PD1216		26B	2
6500	AN960PD2116		26A	7
	AN960PD2116L		30	1
	AN960PD2616		26A	6
6500	AN960PD4L		21	6
6500	AN960PD416		21	162
6500	AN960PD416L		21	2
6500	AN960PD516		26A	10
6500	AN960PD516L		26A	10
6500	AN960PD6L		82	16
6500	AN960PD616		82	10
6500	AN960PD616L		26B	2
6500	AN960PD716		26A	6
6500	AN960PD8		86	4
6500	AN960PD816		12	4
6500	AN960PD816L		26	2
6500	AN970-3		66	21
6500	AN970-4		3	12
	AN970-6		41-15	2
6500	AN975-3		33	41
6500	AN975-4		65	4
	AN975-5		65	4
	AN975-8		2-9	12
	AN995B32		18	AR
	AN995CU20		6	AR
	AN995C41		3	AR
	AN995F32		6	AR
	AN995F41		29	AR
	AN995F47		71	AR
	AN995F62			AR
	AN995NC32		4	AR
	AN995NC40		33	AR
	AN995N40		58	AR
6500	AN996-30		65-3	2
6500	AN996-32		57-65	1
	AR-200-3		77	1
1600	ARC TYPE A-12		86	1
1600	ARC-15C		86-38	1
	ARC6357		86	4
	AS-148/ARA-8		86-19	2
	AS-313A/ARN-6		86-22	1
	AT-145B/A		86-1	1
	AT-256/ARC		86-1B	1
	AT-455/ARC		86-46	1
	AT-624/AR		86	2
	AT-640/ARN		86-49	1
4500	AT900-90-1		89	8
4500	AT900-90-2		89	8
4860	AV1B1474	V1	85	1
4860	AV16B-1229		32-13H	1
4860	AV16B-1229B		32-11A	1

AF Class Code or Stock No.	Part Number	Army Source Code	Figure and Index No.	Qty per Article
2343	AW1-7/8-CN13		92-25	1
6143	AW2-3/4-25L		82-31	1
6143	AW3-10A		82	2
4259	AYLC-4956		88	2
4259	AYLC-4956-1		88	2
4516	A06C03		85-7	1
	A100D		77	1
6500	A1778-8Z-1			113
6500	A1804-8Z			6
4586	A20-0-51		74-4	2
	A20-50T-55		74	2
6500	A3-20		16	6
6500	A3-25		16	11
6500	A3-35		16	2
6500	A3-40		16	1
6500	A415		89	4
3400	A41665		4-16	2
6500	A417		19-29	3
6500	A5-30		16	40
6500	A5-35		16	34
6500	A5-40		16	12
	A55-40		16	38
	A55-50		16	49
4516	A55A00		85	1
6500	A5934-51		77	2
6500	A6191-8Z3			50
	A6913-1024		86	1
6500	A6913-1024-24A		86	1
6500	A6939-1032-24		82	4
6500	A6939-1032-24A		82A	8
6500	A6939-1032-24G		82	4
3380	A7701-1		77	1
	A7863-10Z		94	1
	A81390		85	1
	A8938-632-24G		78	8
	A8943-632		93	4
2232	BG1A1		86A-30	1
3400	BHM-6AG		26B-26	2
	BRE-5030		91	1
	BRE-5170		91	1
	BULLETIN 138		80-25	3
3330	BULLETIN 350A		86	1
3360	BZ-2RQ1T04		93	1
4500	B1320-2		89	8
4500	B1320-4		89	8
4500	B1328-2		89	24
4500	B1328-4		89	24
3400	B539		57-28	2
3400	B540		52-19	4
3400	B541		57-20	2
3400	B542		52-46	14
3400	B544		57-71	22
3400	B546		54-56	2
	B55A00		85-26	1
4531	B70771-1		94-10	1
	C-155-25-8D		90	2
	C-1827/ARC-55		81	1
	C-301/ARA-8A		86-28	1
	C-4A		77	1
	C-402A/A		80-28	1
	C-403A/A		78-27	1
	C-404A/A		80-30	1
	C-626/ARC-27		86-31	1
	C-628/ARC-27		80	1
	C-695/AIC		81-29	2
	C-700/AIC		78-28	1
	C-790/ARA-26		78-29	1
	C-823/AIC-10		86	1
	C-824/AIC-10		81	1
4564	CA3251		17-5	11
	CE31C751G		85	2
2232	CG1A1		86A-22	1
	CKL-P5G		44	AR
	CKL-P5J		45	2
3350	CM-808		78-12	3

AF Class Code or Stock No.	Part Number	Army Source Code	Figure and Index No.	Qty per Article
3350	CM-814		78-13	2
3330	CP29AIDF103M		77	4
3330	CP53B2DE105K		77	1
3400	CR-24		26-36A	1
	CT-6076		85	1
	CU-361/ARC		86	1
	CU-459/AR		86	1
1600	CU-65/ARN-6		86-10J	1
	CW-141/ARN		86-21	1
1790	CX1301/AR		86	2
	CYR-¾		88-47	1
7700	C1006		58-3	2
8800	C6914-1024		81	1
	C8104-832-1		6	8
	DSRP5		11	5
	DV-8		29	1
3400	DW8		4-38	7
	DY-107/AR		86-42A	1
	DY-77(XA)/A13-10		86	1
4224	D106		60	2
4224	D106-2		60	1
	D1125		61-6	4
6590	D6-1001-3L-3A		71	6
6590	D6-1001-5L		50	6
4516	D97A28		85-15	1
	EB-070		8	2
	EB-080		6-23	8
	EB-126		42-4	4
	ED206		78B	2
1AGJ	E24-G14-4180-A1		85	1
4516	E97A28		85	1
	F-21/ARA-9		86-41	2
	F-21017-26		74-16	1
4903	F-21025-1		74	1
6700	F-835		18	2
4500	FDC-1650-27		89	20
2332	FG102B-13		32	1
	FJ5-100		15-22	4
	FJ5-110		15	8
	FJ5-120		15	4
3400	FR-4		51	2
3400	FR4-5	V	73	10
4903	FT319		94	1
4903	F118103-3		94-27	1
4224	F16-4		77-39	2
4224	F20-4		77	1
4221	G-5055		77	1
4221	G-5055A		77	1
	G-55961		54	2
3360	G-56052		54-31	2
4221	G-7740-8-24		77	2
6500	GA3-175		16	33
6500	GA4-250		19	13
6500	GA5-312		16	167
3400	GDW6		4-17	2
	GSA-4-T813		15	43
6500	GSF5-T-600		15	23
6500	GSF5-120		15	4
	G0S-2-93		16	121
6500	G0S-5-93		16	354
	G334		81	5
	G633		53-15	1
	H-101/U		86	3
	H-46/UR		86-11	4
	H-5000-032-250		16	8
	H-78/AIC-10		86	1
3400	HMX-5G		26A-4	3
3400	HSBG6CR		88-64	3
	ID-351A/ARN		82	1
3320	IL-5/U		86-4	1
3320	IN-88		86-10C	5
	IS-1074		86-3	1
4846	IV-40-570		85	1
4846	IV-40-571		85	1

AF Class Code or Stock No.	Part Number	Army Source Code	Figure and Index No.	Qty per Article
4248	J-138		77	2
1600	J-193/AR		86	1
4911	J-2049-3D		82	6
	J-68/ARC-3		86	1
2332	JG130A-43		82B	1
2232	JG7001A21		86A-34	1
2232	JG7005A24		86A-32	2
2232	JG7005A25		86A-33	1
3360	JV-5		90	1
4516	J60A43		85-27	1
	K-130-13		74	1
	K-130-9		74	1
3400	KP3AR11-2		18	24
3400	KS3L		60-12	3
3400	KS6A		4-54	8
	KY-149/AR		86-42B	1
3400	K3L3		57-42	1
4519	L-5M-1		85-35	1
4519	L-5M-2		85-36	1
	LC-F8		6	36
4248	LQ13-116		78C-26D	1
	M-102		26A	6
	M-3253-2		77-30	1
	MC-124		86-12	AR
3300	MC-136		86	1
	MD34/ARA-8		86-20	1
	MF9-713-30A		32A	1
	MG7001A21		86A-1	3
3400	MR-4		51	4
3400	MR-5		65	2
6700	MS15001-1		9-22	2
6700	MS15001-4		4-76A	6
	MS15002-1		4-18	9
	MS15002-3		4-49	2
6900	MS15006-1		44	4
	MS15006-4		44	4
6700	MS21919DF9		31	1
	MS21919DG10		32A	8
	MS21919DG18		32A	3
	MS21919DG35		85	1
	MS21919F16		85	1
6700	MS21919G8		93A	1
3360	MS25005-5		77	1
7700	MS25010-1		78	26
3360	MS25017-10		77	1
3360	MS25017-15		77	1
3360	MS25017-20		77	1
3360	MS25017-25		77	1
3360	MS25017-35	VI	77	4
3360	MS25017-5		77	34
3360	MS25017-50	VI	77	1
	MS25026		77	1
	MS28034-1		29	1
	MS28045W1		82A	1
4808	MS28700-1		93-46	1
6500	MS28740-20		29	1
6600	MS28741-10-0140		49-7	1
6600	MS28741-10-0150		49-6	2
	MS28741-10-0154		49-1	2
6600	MS28741-10-0164		49-10A	2
6600	MS28741-10-0166		49-13A	1
6600	MS28741-10-0170		49-9A	2
6600	MS28741-10-0174		49-10	1
6600	MS28741-10-0180		49-9	1
6600	MS28741-10-0244		48-15	1
6600	MS28741-10-0250		49-14	2
6600	MS28741-10-0280		46-10	1
6600	MS28741-10-0340		49-25	2
6600	MS28741-10-0370		48-16	1
6600	MS28741-12-0074		29-34	1
	MS28741-12-0080		91	1
6600	MS28741-12-0124		29	1
6600	MS28741-12-0250		29	2
6600	MS28741-12-0317		29-35	1

AF Class Code or Stock No.	Part Number	Army Source Code	Figure and Index No.	Qty per Article
6600	MS28741-12-0450		29-17	1
6600	MS28741-16-0112		32-7	2
6600	MS28741-16-0120		32-13	1
6600	MS28741-16-0144		32A-27	1
6600	MS28741-16-0146		32A-23	1
6600	MS28741-16-0194		31-7	1
6600	MS28741-16-0230		32A-8	1
6600	MS28741-16-0276		31-6	1
6600	MS28741-16-0374		32	1
6600	MS28741-16-0380		32-5	1
6600	MS28741-16-0644		32A-9	1
6600	MS28741-24-0410		32A-2	1
	MS28741-3-0120		85	1
6600	MS28741-3-0174		85	1
6600	MS28741-4-0040		28-12	2
6600	MS28741-4-0060		93-36	1
6600	MS28741-4-0070		31-10	1
6600	MS28741-4-0076		85	1
6600	MS28741-4-0100		75-1	1
6600	MS28741-4-0110		75-19	1
6600	MS28741-4-0112		24-24	4
6600	MS28741-4-0114		28-13	3
6600	MS28741-4-0120		75-5	1
6600	MS28741-4-0126		31-9	1
6600	MS28741-4-0130		93A-40	1
6600	MS28741-4-0135		35-1	1
6600	MS28741-4-0136		24	2
6600	MS28741-4-0140		28-21	1
6600	MS28741-4-0144		93A-61	1
6600	MS28741-4-0160		28-10	1
6600	MS28741-4-0166		28-15	1
6600	MS28741-4-0174		31	1
6600	MS28741-4-0176		75-13	2
6600	MS28741-4-0180		31-16	1
	MS28741-4-0194		31-25	1
6600	MS28741-4-0200		29-16	2
	MS28741-4-0210		85	1
	MS28741-4-0220		85	1
	MS28741-4-0224		31	1
6600	MS28741-4-0274		26B-42	2
6600	MS28741-4-0275		35-2	1
6600	MS28741-4-0300		92-31	1
	MS28741-4-3040		85	1
	MS28741-4-3180		85	1
	MS28741-4-3300		85	1
6600	MS28741-4-0414		31-3	1
6600	MS28741-5-0140		28	1
6600	MS28741-6-0056		47-2	1
6600	MS28741-6-0140		28	1
6600	MS28741-6-0165		47-7	1
6600	MS28741-6-0182		47-4	1
6600	MS28741-6-0184		31-22	1
6600	MS28741-6-0200		31-19	1
6600	MS28741-6-0384		31-4	1
6600	MS28741-8-0114		46-4	1
6600	MS28741-8-0136		46-2	1
	MS28741-8-0150		85	1
6600	MS28741-8-0154		48-5	1
6600	MS28741-8-0162		47-13	1
6600	MS28741-8-0167		46-7	2
6600	MS28741-8-0174		48-7	1
	MS28741-8-0180		32A-40	1
	MS28741-8-0200		32A-41	1
6600	MS28741-8-0240		48-10	1
6600	MS28741-8-0284		48-2	1
6600	MS28741-8-0296		47-10	1
	MS28741-8-0356		91	1
6600	MS28749D20		29-12	1
6600	MS28750D20		29-3	1
6600	MS28782-12		26A	6
6600	MS28782-8		26A	6
6600	MS29512-10		49	6
6600	MS29512-12		29	14
6600	MS29512-16		32	3
6600	MS29512-24		29	2
6600	MS29512-3		85	1
6600	MS29512-4		30	23
6600	MS29512-5		32	2
6600	MS29512-6		30	23
6600	MS29512-8		32	8
6600	MS29513-11		29	2
6600	MS29513-113		30	2
6600	MS29513-212		32A	1
6600	MS29513-214		32A	1
6600	MS29513-215		32A	2
	MS33540		26A	AR
3360	MS35058-1		78C-30	2
	MS35059-4		78C-26C	1
	MS91587		77	1
	MT-1060/U		86	1
	MT-1267/AR		86	1
	MT-1268/AR		86	1
	MT-1536/ARC-55		86	1
	MT-1620/AR		86	1
	MT-236A/ARC-3		86	1
	MT-237B/ARC-3		86	1
	MT-238B/ARC-3		86	1
	MT-274A/ARN-6		86-25	1
	MT-288/ARA-8		86	1
	MT-473/U		86	1
	MT-589/ARN-12		86	1
	MT-677/AIC		86	1
	MT-821/ARC-27		86	1
	MT-822/ARC-27		86	1
3320	MX-273/AR		86-8	1
1600	MX-276/AR		86-6	1
1600	MX-311/AR		86-9	1
	M6921A-8A		85	1
	N-10		26B-4	2
1600	NAF1086-4		86-10G	1
6590	NAF1088-1A-5		16	1
6500	NAS143-10C		8	8
6500	NAS143-12C		8	4
6500	NAS143-16C		42-10	2
6500	NAS143-4C		26C	2
6500	NAS143-6		19-32	44
6500	NAS143-7		8	4
6500	NAS143-7C		8	6
6500	NAS143-8C		23	2
6500	NAS143-9		19	4
6500	NAS143-9C		19	36
	NAS143-9L		19	12
6500	NAS144DH11		26C	2
6500	NAS147-32		9-40	4
6500	NAS147-35		8-40	2
	NAS148A-45		23-1	2
	NAS148A-50		23	2
	NAS149-35		19-10	4
	NAS149-36		19	4
6500	NAS150-40		8-39	2
	NAS150A-127		91	1
6500	NAS150A-48		24-2	1
6500	NAS150A-49		23-2	10
	NAS150A-52		24-1	4
	NAS150A-54		23	2
6500	NAS152-46		8-38	2
6500	NAS152-50		8	2
	NAS152-66		43-3	2
6500	NAS152-69		42-2	2
	NAS156-73		42	2
6500	NAS156-78		42-3	2
6500	NAS183-3-5		58	3
6600	NAS188-3A-090		30-29	2
6600	NAS188-3A-142		30-28	2
6700	NAS221-11		6	28
6700	NAS221-12		11-24	18
6700	NAS221-13		11-25	6
	NAS225DD6		26A	3

AF Class Code or Stock No.	Part Number	Army Source Code	Figure and Index No.	Qty per Article
6700	NAS229-12			12
	NAS364-1AA1062		18A	2
	NAS364-1DD1062		18	2
	NAS364-1DD1188		18	2
	NAS364-1HH1548		18-34	2
	NAS364-1HH1792		18-35	2
6500	NAS365-7A1750		72-1	1
6500	NAS365-7A2100		72-2	1
6500	NAS395-14-1		16	9
	NAS398-60			8
6530	NAS427K8		88-42	1
6530	NAS427W96		20-61	2
6500	NAS427W99		22-73	1
6500	NAS43-3-11		21	2
6500	NAS43-3-16		81	4
6500	NAS43-3-21		21	1
6500	NAS43-3-27		21	2
6500	NAS43-3-28		21	2
6500	NAS43-3-37		21	2
6500	NAS43-3-408		22-74	1
	NAS43-3-55		88	1
6500	NAS43-3-59		21	1
6500	NAS43-4-10		73	1
	NAS43-4-7		51	2
6500	NAS43DD3-16		86	1
6500	NAS43DD3-20		20	5
6500	NAS43DD3-44		93A	3
6500	NAS43DD3-54		20	6
	NAS43DD3-58		32B	1
	NAS43DD4-102		18	2
6500	NAS43DD4-11		67	4
	NAS43DD4-15		87-43	8
	NAS43DD4-166		18	4
6500	NAS43DD4-21		20	1
6500	NAS43DD4-34		21	1
6500	NAS43DD4-42		21	1
	NAS43DD4-74		88	1
6500	NAS43DD8-17		18A	1
	NAS43DD8-37		18	2
6500	NAS43DD8-44		18A	1
	NAS443-16		42-5	2
	NAS443-9		19-11	4
	NAS451-17		24-9	4
	NAS451-18		6-30	2
	NAS451-21		16-5A	4
	NAS451-43		78	AR
6500	NAS464-10-29		24A-8	2
6500	NAS464-10-37		24A-2	2
6500	NAS464-10-45		24A-1	4
6500	NAS464-3A-23		4-81	48
6500	NAS464-3A-4		4-69	72
6500	NAS464-3A-5		4	72
6500	NAS464-3A-6		4-68	72
6500	NAS464-3A-7		4	72
6500	NAS464-3A8		18A	1
6500	NAS464-4-23		65	2
6500	NAS464-4-26		65	4
6500	NAS464-4-29		65	2
6500	NAS464-4A-17		55-48	2
6500	NAS464-4A-22		55-49	1
6500	NAS464-4A-7		6-22	7
6500	NAS464-4A-8		11	4
6500	NAS464-5A-8		26A	32
6500	NAS464-8-24		26-3	2
6500	NAS464-8-26		26A	24
6500	NAS464-8-30		26-1	1
6500	NAS464-9-31		26-2	2
6500	NAS485-4-5		23-25	8
6500	NAS487-13		82A	4
6500	NAS487-15		82	50
6500	NAS487-17		82A	2
6500	NAS487-20		82A	2
6500	NAS488-6			36
6700	NAS50-100		26A	12

AF Class Code or Stock No.	Part Number	Army Source Code	Figure and Index No.	Qty per Article
6700	NAS50-75		26A-38	6
6700	NAS50-75P		26B-19	6
6700	NAS51-100		26A	12
6700	NAS51-18		26A	6
6700	NAS51-215		85	4
6700	NAS51-25		23	2
6700	NAS51-37		88-65	2
6700	NAS51-87		52-18	4
6700	NAS514P-1032-22		15	48
	NAS514P-1032R22		15	24
	NAS548P4-6		18A	2
6500	NAS72-10-102		23-5	4
	NAS72-10-107		23-6	8
6500	NAS72-5-011		26A	2
	NAS72-8-012		26B	2
	NAS72-S-102		23-4	2
	NAS73-4-012		19-23	2
	NAS73-6-104		19-33	2
	NAS73-6-107		18	1
	NAS75-10-013		65-28	4
	NAS75-10-019		65	4
	NAS75-10-020		91	1
	NAS75-10-027		65-27	1
	NAS75-3-003		57	2
	NAS75-3-004		57	4
6500	NAS75-3-005		21	1
6500	NAS75-3-009		54-38	2
6500	NAS75-3-010		62	2
6500	NAS75-3-011		62	1
	NAS75-3-012		62-30	1
	NAS75-3-9		52-21A	1
6500	NAS75-4-007		55-56	26
6500	NAS75-4-008		6	2
6500	NAS75-4-009		55-56	32
6500	NAS75-4-010		55	34
6500	NAS75-4-011		54-9	16
	NAS75-4-012		54-19	23
6500	NAS75-4-013		55-80	16
6500	NAS75-4-014		56-72	11
	NAS75-4-015		62	8
	NAS75-4-016		56-78	5
	NAS75-4-017		21	9
	NAS75-4-018		62-49	10
	NAS75-4-019		65-52	2
	NAS75-4-020		62-9A	2
	NAS75-4-021		62-9	1
	NAS75-4-022		55-35	4
6500	NAS75-4-023		69	1
	NAS75-4-027		66B	1
	NAS75-4-028		52-30	1
	NAS75-4-029		64A	5
	NAS75-4-116		64A	1
6500	NAS75-4-118		64A-10	1
	NAS75-4-120		64A	1
	NAS75-4-123		64A-12	1
6500	NAS75-5-008		21	2
	NAS75-5-012		65	1
6500	NAS75-5-013		65	8
6500	NAS75-5-014		65	2
6500	NAS75-5-015		65-36	1
	NAS75-5-019		66B	1
	NAS75-5-020		64	2
	NAS75-5-025		65	2
	NAS75-5-029		65	1
6500	NAS75-5-219		25-6D	1
	NAS75-6-004		52-33	4
	NAS75-6-006		54-35	4
6500	NAS75-6-008		54-10	4
6500	NAS75-6-011		22-11	1
	NAS75-6-018		22-55	1
6500	NAS75-6-019		22-10	1
6500	NAS75-6-022		22-25	1
6500	NAS75-6-023		22-27	4
6500	NAS75-6-024		22-45	2

AF Class Code or Stock No.	Part Number	Army Source Code	Figure and Index No.	Qty per Article
	NAS75-6-025		54-11	2
	NAS75-6-026		65	2
6500	NAS75-6-123		22-12	2
6500	NAS75-6-125		22-12A	1
6500	NAS75-6-41		22-10A	1
	NAS75-7-011		6-8B	1
	NAS75-9-015		26A	12
6500	NAS75-9-018		9	3
6500	NAS75-9-020		9	1
	NAS76A-10-030		18	12
6500	NAS77-10-25		24A	8
6500	NAS77-10-35		24-5A	1
	NAS77-10-37		23	6
6500	NAS77-10-40		23	8
	NAS77-10-44		9	4
6500	NAS77-10-46		24A	4
6500	NAS77-10-54		24A-16	8
6500	NAS77-10-62		24A-17	4
6500	NAS77-11-44		9	8
6500	NAS77-14-44		9	16
6500	NAS77-14-59		9	12
6500	NAS77-3-17		52-21	1
6500	NAS77-3-18		62-29	1
6500	NAS77-3-55		58-50	1
6500	NAS77-3-8		57	1
6500	NAS77-4-100		54-37	1
6500	NAS77-4-12		68-11	8
6500	NAS77-4-122		54-22	2
6500	NAS77-4-14		64A-24	1
6500	NAS77-4-16		53	4
6500	NAS77-4-17		62-42	3
6500	NAS77-4-18		55-40A	4
6500	NAS77-4-19		54-19A	4
6500	NAS77-4-20		54-9A	4
6500	NAS77-4-21		55-92	4
6500	NAS77-4-22		69	4
6500	NAS77-4-23		64A-47	2
6500	NAS77-4-24		65	1
6500	NAS77-4-25		62	2
6500	NAS77-4-26		62-51	4
6500	NAS77-4-27		62-50	1
6500	NAS77-4-28		66A-53	2
6500	NAS77-4-30		66A-13	1
6500	NAS77-4-31		65-62	2
6500	NAS77-4-32		65-37	1
6500	NAS77-4-33		62-28A	2
6500	NAS77-4-34		64A-11	2
6500	NAS77-4-36		62	1
6500	NAS77-4-38		21	2
6500	NAS77-4-42		65-51	1
6500	NAS77-4-43		66B	1
6500	NAS77-4-48		66A-39	1
	NAS77-4-62		66B	1
6500	NAS77-4-78		64A-36	1
6500	NAS77-4-85		54-15	1
6500	NAS77-4-97		58-48	1
	NAS77-5-010		91	1
	NAS77-5-023		91	1
	NAS77-5-13		91	1
6500	NAS77-5-18		26A	8
	NAS77-5-20		58-13E	2
	NAS77-5-21		26A	8
6500	NAS77-5-219		12	2
6500	NAS77-5-28		26A	2
6500	NAS77-5-31		26A	5
	NAS77-5-34		66B	1
	NAS77-5-44		64	2
6500	NAS77-5-51		52-25A	2
6500	NAS77-5-53		12	2
	NAS77-5-59		65	1
	NAS77-5-70		65	2
6500	NAS77-6-22		26A	6
6500	NAS77-6-23		22-47	21
6500	NAS77-6-25		26A	6
6500	NAS77-6-35		22-13	2
6500	NAS77-6-38		19-21	4
6500	NAS77-6-41		22-26	4
6500	NAS77-6-42		22-46	8
6500	NAS77-6-43		22-42	1
	NAS77-6-44		58-13D	2
6500	NAS77-6-48		54-12	2
6500	NAS77-6-50		26	8
	NAS77-6-54		65	4
6500	NAS77-6-56		22-44	2
	NAS77-6-59		65	2
6500	NAS77-6-62		26	8
6500	NAS77-7-36		6-8A	4
6500	NAS77-8-17		9	4
	NAS77-8-22		26C	2
	NAS77-9-46		9	4
	NAS77-9-56		9	4
6500	NAS77A16-37P		26B	6
6500	NAS77A4-10P		63-25	2
6500	NAS77A4-18P		53	2
6500	NAS77A4-38P		63-22	2
6500	NAS77A6-38P		63-3	2
	NAS77A8-84		18	2
6500	NEC-GRA12X18-48T24		32	1
6500	NEC-GRA162-4T24		32	1
6500	NEC-GRA200-6T24		32	1
6500	NEC-GRA350-8T24		32	1
6500	NEC-GRA4X6-12T24		32	1
6500	NEC-GRA725-16T24		32	1
9428	P-904-5		85	1
6500	PC-3½		78-3	26
	PD12K19		28-1	1
	PE-904-5		85	1
6500	PF-3½-38		78	26
3360	PG208-B5		85-19	1
	PHS10105-8-1A		44-9	24
	PHS10105-8-2A		44-4	24
	PHS10105-8-3		44	24
1AGJ	PHS10105-8-4		44	24
	PHS10105-8-6		44	24
1AGQ	PHS-10106H12C15		32B-10	1
	PHS153-1-3-12D		18	2
	PHS153-1-7-16		26B	4
	PHS153-3-17-24DP		24-23	8
	PHS153-3-4-15		29-7	8
	PHS15303-9-13D		92	1
1AGQ	PHS204-1		52-32	4
	PHS256-1-.016-1A		12	2
	PHS406-1L-1-270		60	1
	PHS406-1L-2-360		60	1
	PHS406-1R-1-270		60	1
	PHS40701-1		44	AR
	PHS40701-2		44	AR
	PHS40701-3		44	AR
	PHS40701-4		44	AR
	PHS503-1		29	1
	PHS509-1-23-15½		29-20	1
	PHS509-1-23-18¼		29	1
	PHS509-1-23-20		29	1
	PHS80803-1.500		88	2
6500	PS-3½		78	26
2232	QG5A1		86A-29	1
	R-101A/ARN-6		86-40A	1
	R-122/ARN-12		86-27A	1
4238	R-270M2-4M1		41	1
4238	R-270M2-4M2		41	1
4238	R-270M2-4M3		41	1
1600	R-4001		78-60	2
1600	R-4002		78B-23	2
1600	R-4003		78-61	1
4238	R-420M20		60-18	2
4238	R-420M21		60-23	1
4238	R-446		41	1
	R-77A/ARC-3		86-32	1

AF Class Code or Stock No.	Part Number	Army Source Code	Figure and Index No.	Qty per Article
6590	RA-2258-3		88-4	4
6590	RA-2258-4		90	1
4911	RC-27-10		38	8
4911	RC-27-11		38-4	8
4911	RC-27-14		38-11	1
4911	RC-27-15		38	2
4911	RC-27-16		38	36
4911	RC-27-17		38-17	8
4911	RC-27-19		38-12	8
4911	RC-27-2		38-10	4
4911	RC-27-20		38-13	8
4911	RC-27-21		38-2	16
4911	RC-27-23		38	24
4911	RC-27-25		38-14	16
4911	RC-27-26		38-18	2
4911	RC-27-3		38-9	1
4911	RC-27-30		38-16	1
4911	RC-27-31		38	16
4911	RC-27-40		38-5	1
4911	RC-27-6		38-15	16
4911	RC-27-7		38-3	8
4911	RC-27-8		38	8
4911	RC-27-9		38	16
4911	RC-27K		38	1
4911	RC-27K-SA1		38-6	1
4911	RC-27K-SA2		38-7	3
4911	RC-27K-SA3		38-8	1
6053	RCA-2		82-25	1
6500	RD102SB-4L		58	4
	RE-13/ARA-8		86-30	1
4248	RE-200-1		77	1
3400	REB3N		57	2
3400	REB3N2		60-6	3
	REP4M6-4		64	2
	REP5M6-2		64	2
3400	RE4F5		54	55
3400	RE4H6		67	2
3400	RE4M6		51	18
	RE94(XA)/AIC-10		86	1
2232	RG7042A1		86A-35	1
2232	RG7064B1		86A-31	4
	RG9570-2		28	1
6500	RL16SB-5		58	4
6500	RL21SB-6		18	4
	RT-175/PRC-9		86-14	1
	RT-178/ARC-27		86	1
	RT-294/ARC-44		86-36A	1
	RT-349/ARC-55		86	1
3350	RW15J140		78	1
3350	RW15J250		78	1
3350	RW15J310		78	1
3350	RW20G140		81	1
3350	RW20G250		81	1
3350	RW20G251		81	6
3350	RW20G310		81	1
	R104SB-6L		18	4
6600	R1755		27-3	1
	R1820-103		27	1
3400	R4G		14	13
	S-11-8		26A	3
	S-1452-054		26A	32
	S-1452-108		8	2
	S-1452-126		8	2
4219	SA-4297-D-1			2
	SAE W-07		3A	13
	SB-327/ARC-44		81	1
	SB-329/AR		81	3
2232	SG2A1		86A-26	1
2232	SG4A-1		86A-28	1
1AGJ	SK3287-3		33-30B	1
	SP-2220		15-30	24
5612	SP4348112		32A-35	2
5612	SP434829		32A-36	4
5612	SP434892		32A-34	4
5612	SP434893		32A-33	4
	ST2-165-0000		32B-34	2
	ST42E		58	1
	S5A200		19	10
	S5A225		19	2
	S9LU-3		28-3	2
1600	T-11B		86-33	1
1600	T-13A		86-36	1
	T-67/ARC-3		86	1
	TA155-S4-12D		92-12A	1
	TA572D17		32A	2
	TA778-D4		88	2
	TB155-S2-4D		91	1
	TB155-S2-8D		93-83	2
	TB155-S4-8D		90	3
1600	TF-127/U		86-29	1
4839	TF51200-10		32-14	1
3360	T1002		58-6	1
	T150-S1-8D		32A	2
4840	U-512301		30-13	1
4840	U-512575		30A-16	1
4840	U-512661-1		30	1
4840	U-512829-2		30	1
4840	U-513600		30A-5	1
	U-513600-2		30A	1
4840	U-513738		30A	1
4840	U-5410-4D		30A-12	1
4840	U-5410-5D		30-6	1
8850	U-61/U		86	1
8850	U-82/U		86	1
1600	U-92/U		86	1
1600	U-94/U		86	1
4840	U-9500		31-24	1
4840	U-959		32-8	1
8850	UG-201/U		86	1
	US-104		54-32	2
	US-141		54-33	2
	V-013		85	AR
	W-065		26A-52	3
	W-07		23-40	2
6700	W-10		26B-5	2
4815	W-1700-⅛D		82-14	1
	WB10249		89-9	8
	WB10265		89	36
4815	WE4801-1½D		29-27	2
4815	WE484-1D		32-11	1
1600	WF-14/U		86	AR
8860	WF-5/U		86	AR
2232	WG182A2		86A-25	1
4502	WM-203		74	2
8860	WS-5C/U		86-5	AR
3360	W101W4		78-71	1
4556	W15770-14-3		79-6	1
4556	W2091-0-11		79	1
4556	W3778-6		79	1
4815	W7000-1D-4		85	1
	XTL-40A		86	1
4556	XW1300-A306BA		79-3	1
4556	XW20025-16-15		79	1
4248	XW20026-2		79	1
4556	XW20345-320-74		79	1
	XW20465-13		79	1
4202	X646		58	2
3360	X646A		58	2
	X702-68D		85-9	1
4844	X8-161		31	1
4529	0-3903-0-4055		87-67	2
	0-3903NN-157		87	2
4516	01C70		85-17	1
4516	01C71		85-14	1
3300	0317		78-10	2
	0524AK10		36	36
	066654		92-27	1

AF Class Code or Stock No.	Part Number	Army Source Code	Figure and Index No.	Qty per Article
	07100		23-44	3
4516	08C69		85	1
	09C27		85	1
	10-35370-1		28-5A	1
	10-50585-2		77	1
4815	100279		93-22	1
	100912		85-11A	1
	100913		85-11	1
9426	100914		85-16	1
	101189		85	1
	102789		85	1
4213	1042-17A		77-32	1
	107035		32	1
	11D-2		92-30	1
	11074-24D88		27	1
	111-312-631-20D19¼		27	1
	111-312-631-24D21		27	1
	111-568713		32	1
4831	1111-517703		32A-13	1
	1111-517706		32-45	2
4831	1111-517707		29-19	1
4937	115057-1		34-28	2
4937	115059-1		34-19	86
4937	115457-1		34-21	43
4937	115460-1		34-16	43
4937	115801-5		34	1
4937	115801-7		34-13	1
4937	115802-1		34-14	43
4937	115851-1		34-24	1
4937	115852-1		34-23	1
4937	115855-1		34-27	1
4937	115856-1		34-26	72
4937	115858-1		34-18	2
4937	115863-1		34-22	43
4937	115871-1		34	AR
4937	115871-2		34	AR
4937	115871-3		34	AR
4937	115871-4		34	AR
4937	115871-5		34	AR
4937	115871-7		34	AR
4937	115872-1		34-20	86
4937	115901-1		33-30	1
4937	115901-11		33	1
4937	115901-13		33	1
4937	115901-3		33	1
4937	115901-9		33-30A	1
8850	11749		77	1
8850	11751		77-29	1
	12B-064		19-35	2
4862	120604		33	1
	122637-200-02		32	1
3360	12280-1		29-24	1
1600	12404		86-39	1
1600	12501		86	2
1600	12502		86	1
1600	12504		86	1
4247	1251A		77-33	1
1600	12706		86-23	1
	128308		78	1
4506	13X-13261		74	2
	1311-522610		32A	1
	1311-532405		32A	1
4831	1311-563017		32-53	1
	1311-563038		32A-44	1
	1321-517307		32A	1
4831	1359-527896		35	1
4862	13741B		33-39	1
8860	14		3-90	6
4651	1405-4-00		61-5	2
4651	1405-4-90		61-12	2
4213	1416-122-J		28-4	2
1600	14402		86	1
	1452-048		52	2
8850	14589		86	1
6034	14602-1J-D1		82-16	1
6126	147B30A		82-10	1
6126	147B31A		82-11	4
6126	147B32A		82-9	1
	1473		74-13	2
	148-1-0250		77	1
	1483		15	25
	14958-116.1MC		86	1
	14958-118.1MC		86	1
	14958-121.5MC		86	1
	14958-121.7MC		86	1
	14958-121.9MC		86	1
	14958-122.1MC		86	1
	14958-122.5MC		86	1
	14958-126.18MC		86	1
	14958-126.3MC		86	1
	14958-126.7MC		86	1
1600	15002		81-38	1
	1511-4		32A	1
4868	155-S6-12		92	1
4868	155-S6-12D		93	1
4868	155-S6-8		91	4
4868	155-S6-8D		93	1
4868	155-S7-8D	V1	93-84	2
	15519		86-42	1
	15600		86	1
	15640		86	1
	15662		30-27	2
6145	156891		77	1
6263	15700		82-22	1
6500	15794		81	1
6500	15824		81	1
	15840		86-33A	1
2366	1613-02-1		77	1
2366	162-002		85	2
2366	162-09-140		82-7	1
2366	164-02		77	1
2366	164-02-1		77-34	1
6034	1645-6M-A1		82	2
2366	165-010-192		32-21	1
6700	16531		85	1
2366	166-02		77-35	1
3330	166-07-270		77	1
	1683		77	1
	1701		93-72	1
3360	17320-19		85	1
4248	17320-4-225		85-21	1
3360	17321-2-120		85-22	1
4248	17322-3-350		85-23	1
	18200		24-46	2
3360	18422-0-350		85	1
3360	18423-0-120		85	1
	18545		85-25	1
	19150		23-48	3
6700	2-0-100		93	19
6700	2-0-140		54	35
6700	2-0-160		92	13
6700	2-0-180		16	2
6700	2-0-240		16	6
6700	2-0-80		92	10
4220	2CM76C1		28	1
4220	2CM76C2		28	1
4220	2CM76C3		28	1
4220	2CM76C4		28-7	1
6119	2CM9AAA-3		28-5	1
	2C1565-90A		82-13	1
6263	2C1565-91A		82B-20	1
6600	2F1-1-14801		32	4
6600	2F1-1-14802		32	4
6600	2F1-2-12394		32	6
6600	2F1-2-13702		32	3
6600	2F1-2-14805		32	6
6600	2F1-3-14811		32	4
6600	2F1-3-14814		32	6

AF Class Code or Stock No.	Part Number	Army Source Code	Figure and Index No.	Qty per Article
6600	2F1-4-13343-1		32	3
6600	2F1-4-13343-11		32	3
6600	2F1-4-13343-14		32	4
6600	2F1-4-13343-2		32	3
6600	2F1-4-13343-5		32	3
1AGJ	2F1-6-13030		32-27	1
1AGJ	2F1-6-16048		32	1
1AGJ	2F1-6-16049		30A-24	1
	2F1-6-22720		30A	1
3360	2J56A4-4		78C-32	1
4804	2P-R400-BRD-5		28	2
1AGJ	2S	P1	18-3	2
6700	200-3/16		30A	8
4911	200PL-45		80-53	3
4911	200XPD90		80-54	3
6750	201551		26A	6
	203500		74	2
	206		58-23	1
	2071		74	1
3900	207946-4		23-52	2
3900	207983		26-32	1
3900	207992		25-35	1
	211-0000		32B	2
	212-12N		54	22
	214595		23-46	6
6215	2149		82-20	2
8850	2182-2		80	1
8850	2182-8		80	1
	21877-21		36-2	2
	21877-43		36-5	2
	21877-44		36-9	1
6500	22A5-02		30A	8
	22K1-048		14	4
	22NKM-62		18	164
4844	220-10		31	1
6244	22322-S-ET12		82A-15	1
6600	22741		85	4
4849	24342		29-22	1
4849	24342-1		29	1
4101	24963		94	2
6134	25101A2C1B1		82-12	8
6134	25200A15B1-1A1		82-8	2
4801	25460-5		26A-22	3
4237	25805		35-3	1
4237	25805-2		35	1
	2600-SW		54	16
	2600-1		93	8
	2600-2		93	2
6500	2600-4		54	6
6700	2722-2		90-10	1
6600	275-2		75	20
6600	275-4		75	4
6600	275-5		77	4
	2752-164		42-5A	2
	28-2-G		88	1
6700	3		86	1
	3-1821		28	1
4934	3L2376		80-8	1
4934	3L2492		81-9	1
4934	3L2912		81	1
3380	3QA95A		81	1
	3R1127		3	2
	3 x 5/8		3	AR
4846	3001-2		91-22	1
	3047A		26C	1
	3077-1		26C	1
	3077-2		26A	2
	3103		90	1
3360	3149-1-A		75-2	3
	31708		41	1
4280	31708-1	V	41	1
4280	31708-2		41	1
4280	31708-3		41-16	1
6136	31890		82-4	2

AF Class Code or Stock No.	Part Number	Army Source Code	Figure and Index No.	Qty per Article
	3194A		26A	2
	32		3-3	6
	32A15		85	1
6500	320-562-2.375S		32	1
	320C.625-4.125M		37-3	9
	320C.625-4.225M		37-4	2
	320C.750-5.625M		37-12	1
	3209093		28	1
	3209105		85	1
6500	321-63-187-S		24-28	2
6500	321-63-200-S		24-28A	2
6500	321-63-225-S		24-29	2
6500	321-63-250-S		24-29A	2
6500	321-63-275-S		24-30	2
6500	321-63-325-S		24A-33	10
6500	326-625-3.625-S		23-26	4
4821	3278-5		92-20	1
4203	34368-D		39-8	1
3360	355		78B	1
4203	35534-2		39-2	18
4849	35951-2		30-15	1
4502	36G2873		74-2	1
4203	36010		39	18
3400	37X-1		86-49	1
6025	373D02		83-41	1
	38162		41	1
4805	38162-2		41	1
4502	39B5435		30A-6	2
	3955		32B	4
	4 x 1/2		3	12
	40A31		85-2	1
	40G18		33	48
	40G6-1		33	4
	4002-N		13	112
	4002-0		14	9
	4002-10		33	18
	4002-11		33	28
	4002-12		33	8
	4002-13		33	14
	4002-14		14-9	3
	4002-4		13	9
	4002-6		33	14
	4002-7		33	6
	4002-8		33	60
	408		27	50
3360	4101-22B-44A		47-19	1
8800	4190		80	1
	42D22-080		9-15	1
8870	4208			6
8800	4224		80	5
4221	4265A		77	3
1AGJ	43A14984		29	4
4502	43B2330		89-13	24
	43453-3.110-1		36-3	2
	43453-4.301-1		36-6	2
	43453-4.961-1		36-10	1
	439		87-66	2
	439A		87	2
	44B18574		80-26	2
	44D9467		89	8
	45A7400-1		80-41	1
	45G25670		32B-28	2
4642	450		94-9	2
3320	46A42256		78C	1
3360	46A5122		58	2
3360	46B5106		58	1
4221	4613		78-41	2
4804	47A1562		92	2
	470097		78B-2	2
4221	4750		78-6	3
4221	4789		82-21	1
4221	4790		82-15	1
	48-4100		28-6	1
6700	48133		89	9

AF Class Code or Stock No.	Part Number	Army Source Code	Figure and Index No.	Qty per Article
6700	48152K2215		86	1
4221	4850-1		92-24	2
4221	4855		82-1	14
	49C1255-4		81	2
	49C12550		78	1
	49C12551		78	3
	49C12551-4		81	2
8800	49C6548-5		77	3
4502	49D7079		89-8	26
4502	49F6550-1		89-7	20
4804	49F9798-31		32-17	1
4804	49F9798-43		32-13E	3
4804	49F9798-55		32-6B	1
4804	49F9798-58		32-19	2
4804	49F9798-65		30A-15	1
6200	5		19	12
	5-F-780		15	1
	5-F-800		15	10
	5-F-820		15	3
	5-F-860		15	2
	5-F-900		15	3
	5-F-920		15	2
	5-F-960		15	1
	5-0-120		16	111
	5-0-140		16	102
	5-0-200		27	1
	5-0-240		16	2
	5-0-800		15	22
	5-0-820		15	5
	5-0-840		15	3
	5-0-900		15	11
	5-0-920		15	3
	5-0-940		15	3
4502	50D3770		87-64	2
4502	50D3772		89	2
4931	50037		81	1
6700	50834		13-24	4
6700	50834K2215		86	1
	51J3817		90-14	1
	51045K2215		86	1
	510525-6		23-47	3
	5107-62		23-35	2
	510779-12		23-45	3
	510779-2		24-44	2
	5108-56-MF		58	1
6700	51086		89	5
	511156-M		26-29	1
	511431-2		23-37B	2
	511627-M		26-30	1
6700	51167		89	3
	511705-1		23-42	3
	512104-4		24-45	2
	512156-M		24-47	2
	512157-M		24-48	2
	51286		86	1
3360	51669-F4		81	1
6500	517-3.593-B		85	1
6500	518-2.593-B		85	1
4221	5180-327		78-9	25
	52-040-187-0540		18	8
	52A4160		58-5	2
	52NE-080		2-10	12
	5200-H21		89	1
4221	5299-24		78-7	14
4502	53D20961		87	3
	5300-H21		89	6
	530751M		26-21	1
4109	531031M-1	V1	24-38	2
4512	539		87	2
5402	54H19651		87-63	2
4846	548025		92	1
4846	548025-5		92-35	1
4844	550-10A		32	2
4808	551050-3		93-46	1
	5527540		64	2
	5527541		64	2
3360	555-3740		47	1
6126	56B25		77	1
6600	561			4
3360	575-40		47	1
	5890-327		78A-4	11
4844	6-220-12		31	1
4844	6-270A		31-21	1
4844	6-272FL-A		32-47	1
4844	6-533A		32-1	3
4844	6-550-12A		32	2
4844	6-585A		32	2
4844	6-816A		29-15	1
4844	6-818		29-21	1
4844	6-850-12A		29	1
1AGJ	60123		36	1
1AGJ	60123-107		36	1
1AGJ	60123-109		36	1
1AGJ	60123-11		36-11	1
1AGJ	60123-111		36-7	1
1AGJ	60123-113		36-8	1
1AGJ	60123-13		36-14	1
1AGJ	60123-15		36-17	1
1AGJ	60123-3		36-1	1
1AGJ	60123-5		36-4	1
1AGJ	60123A		36	1
1AGJ	60211		37-7	1
	60211-10		37-19	1
6240	603654-21		82B-18	1
1AGJ	60500-100		37	1
1AGJ	60500-11		37	1
1AGJ	60500-13		37-8	1
1AGJ	60500-15		37	1
1AGJ	60500-200		37	1
1AGJ	60500-21		37-13	1
1AGJ	60500-23		37-14	1
1AGJ	60500-25		37-15	1
1AGJ	60500-27		37	1
	60500-272		37	1
	60500-279		37-2	1
	60500-281		37-5	1
	60500-283		37-6	1
	60500-285		37-9	1
	60500-287		37-11	1
	60500-289		37-16	1
1AGJ	60500-29		37-17	1
	60500-291		37-18	1
	60500-293		37-20	1
	60500-295		37-21	1
	60500-297		37-22	1
1AGJ	60500-3		37-1	1
	60500-300		37	1
1AGJ	60500-31		37	1
1AGJ	60500-317		37-10	1
1AGJ	60500-319		37	1
1AGJ	60500-33		37	1
	60500-333		37	1
1AGJ	60500-35		37	1
1AGJ	60500-39		37	1
	60500-400		37	1
1AGJ	60500-41		37-23	1
1AGJ	60500-5		37	1
1AGJ	60500-7		37	1
	6104		78	2
3900	611500		23-53	2
4815	6458		77	2
6240	653278		77-26	1
6240	653822D		77-27	1
6240	656767		74	1
6240	664543C		74	1
3380	666-154		77	1
6025	671BU010		82	2
6025	671BX-010D		82	2

AF Class Code or Stock No.	Part Number	Army Source Code	Figure and Index No.	Qty per Article
6025	671CPX4-037		82-23	2
6240	673447		77-24	1
	6815-24		82A-14	2
3900	690014		25-36	1
	690015		26	1
3400	6913		44-22	4
6201	6970-1		74-3	1
	7-750-85		32A-20	1
	7-837-205		89-12	AR
	7-837-810		89-11	AR
3340	70G175		77	1
	7005D8		32A-57	2
8870	7079-24		77	4
4849	7101-1		85	1
6025	716BU-4-052		82-18	1
3380	7264-404		77	1
	735-21-2-8		26A	3
6500	735SS-4-2-8		86-45	1
3360	74005-F3C		78C-33	1
4844	749-10A		29	1
4849	7501-1		32-17	1
8850	7526		77	6
	7526-1		77	1
6134	7601-2A5-1A		75-10	4
6134	7700-15A5-2		76-7	1
6134	7707-2A5-1		75	4
6500	784-4		85	15
4646	79-01		25-7	1
4646	79-0104		25-8A	2
4646	79-0105-3		25-8J	1
	79-0122		25-8	1
	79-0126-1		25-9	1
	79-0126-2		25-10	1
	79-0135-1		25-11	2
	79-0135-2		25-12	2
4646	79-0141		25-8B	1
4646	79-0142		25-8E	1
4646	79-0143		25-8F	1
4646	79-02		23-12	2
	79-028-125-0625		88-57	1
4849	7901-1		32-9	1
	7919-24		82A-9	12
	7942		77	2
	8 x ¾		3-8A	6
4844	8-101		84-22	1
4844	8-101-12A		31	3
4844	8-101A		31-1	2
4844	8-110		84	1
4844	8-110FL		31-23	1
	8-112		31	1
4844	8-151A		31-2	1
4844	8-201-12A		31	1
4844	8-301-12A		29	1
4844	8-301A		29-18	1
4844	8-310FL		29-31	1
4844	8-815-12		27	1
4844	8-842		27-5	1
4844	8-843		27-6	1
2319	8DJ51GAR-3			1
	8DJ67FAK-1		82	2
6700	8N-13			4
4593	80215-5		85-31	1
6062	80383C		77-25	1
4849	8051-2		30-10	2

AF Class Code or Stock No.	Part Number	Army Source Code	Figure and Index No.	Qty per Article
	80967		85-42	1
4849	8101-1		32-19	1
4516	82A15			1
4819	8504273		29	1
4849	8517882		29	2
	8517883		29	2
4819	8518498		29-5	1
4819	8518522		29-11	1
4819	8520326		49-18	1
4819	8521992		49	1
4219	86A75		77	1
3360	8749K11		80	1
	8802K10		58-7	1
4868	8844-16D		32	1
3360	8859K11		78C-28	1
4868	8890-16D		32	1
3360	8916K680		78	2
	9-196-650		74-5	3
	902-360-2		26A	3
	903		93A-24	1
2338	90702		78-4	2
4605	9097A-00		26	1
4605	9097A-30		26-12	2
4605	9097A-46		26-8A	2
4605	9097A-59		26-8	1
4605	9097A-61		26-18	1
4605	9097A-63		26-13	2
4605	9097A-64		26-8B	1
4605	9097A-65		26-17	1
4605	9097A-66		26-14	1
4605	9097A-69		26-15	1
4605	9097A-73		26-16	1
4605	9097A-85		26-19	1
4605	9097A-90		26-10	4
4605	9097C-00		26	1
4605	9217A-00		24	2
4605	9217B-00		24	2
4605	9217C-00		24-6	2
4605	9218-170		26	1
6500	9345-20S		29-1	1
6600	950544-24-88		27	1
6600	9510-K		74	32
	9510375		23-37A	10
	9510663		24-41	1
	9510708		24	2
	9510847		24-39	1
	9520362		23-43	3
4109	9520713		23-36	2
	9520963		23-50	2
	9520964		23-49	2
	9521634		24-40	1
	9521635		24-42	1
	9530486		25-32	1
	9530487		25-33	1
4109	9530531		25-21	1
4109	9530721		24-33	2
	9530727		24-34A	2
4109	9530791		23-38	2
6600	9550-24-23.5		29-14	1
	9555		77	4
6145	96862		74-6	1
	966129		26A-58	6
6125	981-BX-8-023-1		82-3	2

AF Class Code or Stock No.	Part Number	Army Source Code	Figure and Index No.	Qty Per Article	Micro-film Index
1AGJ	14C1106-1	P	52-44	8	G100
1AGJ	14C1106-3	P	52-23	4	G100
1AGJ	14C1106-5	P	52-20	4	G100
	14C1112-2	M		8	E077
1AGJ	14C1137-1	P	52-53	8	E078
1AGJ	14C2115-15	P	58-47, 59-10	8	H389
1AGJ	14C2115-28	M		1	H389
1AGJ	14C2115-44	P	57-74	1	H389
1AGJ	15C1458-6			6	H390
1AGJ	15D3085-2	P1	45	32	G202
1AGJ	15D3085-3	P1	45	30	G202
1AGJ	15D3085-4	A	45-1	2	G202
	15E2026-11	M1		1	L202
	15E2026-4	M1	81-23	1	L202
	15E2026-8	M1	81	1	L202
	15E2026-9	M1	81	1	L202
	15P3050-3		30-20	1	K074
	15P3050-6		30-25	2	K074
	15P3052-1		30-23	2	H020
	15P3053-1		30-19	2	F144
	15R3202-1	P	4-82	48	D424
1AGJ	17C1116-1	*	52-26	4	G233
1AGJ	17C1116-10	P1	52	2	
1AGJ	17C1116-11	P1	52	2	
1AGJ	17C1116-2	X1	52-31	4	G233
1AGJ	17C1116-20	X1	52	4	
1AGJ	17C1118-1	A	52-17	1	H391
1AGJ	17C1118-2	A	52	1	H391
1AGJ	17C1118-3	P2	52	1	H391
1AGJ	17C1118-4	P2	52-22	1	H391
1AGQ	17C1120-1	A	52	1	H393
1AGQ	17C1120-2	A	52-51	1	H393
1AGJ	17C1120-3	P2	52-54	1	H393
1AGJ	17C1120-4	P2	52	1	H393
1AGJ	17C1121-1	P	52-8	3	D303
1AGJ	17C1123-10	P2	52-67	1	H394
1AGJ	17C1123-11	P2	52-68	1	H394
	17C1123-12	X1		1	H394
	17C1123-13	X1		1	H394
	17C1123-14	X1		1	H394
	17C1123-15	M1		1	H394
	17C1123-16	M1		1	H394
	17C1123-3	X1		2	H394
	17C1123-4	X1		4	H394
	17C1125-1	M	52-28	4	E080
1AGJ	17C1128-1	P	52-41	4	E081
1AGJ	17C1130-5	A	52-45	1	H395
1AGJ	17C1130-6	A	52	1	H395
1AGJ	17C1130-7	P2	52	1	H395
1AGJ	17C1130-8	P2	52-48	1	H395
1AGJ	17C1131-1	P	52-42	2	E082
	17C1132-1	M		2	
	17C1132-2	X1		4	
	17C1132-3	X1		2	
	17C1132-4	X1		2	
1AGJ	17C1133-1	P	52-7	2	D304
1AGJ	17C1134-1	P	52-34	4	E083
	17C1136-3	M		4	G101
	17C1136-4	M		4	G101
1AGJ	17C1137-5	X1	52	2	H396
	17C1138-1	M	52-11	4	E084
	17C1142-1	M		1	E086
1AGJ	17C1142-2	P	52-66	1	E086
	17C1150-2		53-1	1	L002, H397
	17C1150-3	*	53	1	
1AGJ	17C1150-4	P1	53	1	
	17C1151-5	X1	53-3	1	
	17C1151-6	X1	53-4	1	H398, H399
	17C1151-7	X1		1	
	17C1151-8	X1		1	
1AGJ	17C1152-1	P	53-37	2	G102
1AGJ	17C1152-2	P	53-7	1	G102
1AGJ	17C1152-3	P	53-8	1	G102

AF Class Code or Stock No.	Port Number	Army Source Code	Figure and Index No.	Qty Per Article	Micro-film Index
1AGJ	17C1152-4	P	53-9	2	G102
1AGJ	17C1153-1	P	53-25	1	E087
	17C1154-1	X1	53	1	E088
1AGJ	17C1154-2	X1	53-38	1	E088
1AGJ	17C1155-1	P	53-29	1	G103, H400
	17C1156-1	M1		1	E089
1AGJ	17C1157-1	P	53-27	1	E090
	17C1158-1	M	53-10	3	D305
	17C1158-2	M	53-11	3	D305
1AGJ	17C1160-1	P1	53-26	1	H401
	17C1161-1	X2	53	1	G104
1AGJ	17C1161-2	X1	53-21	1	G104
1AGJ	17C1163-1	M1	53-16	1	E091
	17C1164-3	X1	53-13	1	L003, H402
1AGJ	17C1164-4	P1	53	1	
	17C1164-5	X1	53-14	1	
	17C1164-6	X1	53	1	
1AGJ	17C1165-1	P	53-34	1	E092
1AGJ	17C1166-1	P1	53-17	1	E093
1AGJ	17C1167-1	P1	53-31	1	E094
1AGJ	17C1168-1	P1	53-23	1	G105
1AGJ	17C1170-1	P1	53-22	1	G106
1AGJ	17C1176-1	X1		1	E095
	17C1176-2	X1		1	E095
1AGJ	17C1178-1	P		1	E096
1AGJ	17C1179-1	P	53-47	1	H403,
1AGJ	17C1179-2	X1		1	H404
1AGJ	17C1180-1	P		1	D306
1AGJ	17C1208-1	P	54-57	2	E097
1AGJ	17C1209-1	P	54-54	2	E098
	17C1222-15	X1	54-1	2	L004
1AGJ	17C1222-16	X1	54	2	L004
	17C1222-17	X1		2	L004
	17C1222-18	X1		4	L004
	17C1222-19	X1		4	L004
	17C1222-20	X1		2	L004
1AGJ	17C1222-25	P1	54	2	L004
	17C1222-3	X1		2	L004
	17C1222-4	X1		2	L004
1AGJ	17C1223-1	P	54-55	4	D308
1AGJ	17C1254-1	P	55-10, 56-11	10	E099
	17C1276-10	X1		1	L005
1AGJ	17C1276-11	P	54-63	1	L005
	17C1276-12	X1		1	L005
	17C1276-13		54	1	L005
1AGJ	17C1276-5	P	54-62	1	L005
	17C1276-6	X1		1	L005
	17C1276-8	A	54	1	L005
1AGJ	17C1276-9	P1	54-59	1	L005
1AGQ	17C1302-1	X1		2	E100
1AGQ	17C1304-1	X1		1	D309
	17C1308-1	*	58-19	1	E102
1AGQ	17C1308-2	P	58	1	E102
1AGJ	17C1311-1	M	58-13B	2	E103
1AGJ	17C1312-3	P1	58-53, 59-13	2	H405, H406, H407
1AGQ	17C1313-2	P	59-2	1	E104
1AGQ	17C1314-2	X1		1	G107
1AGQ	17C1315-1	X1	58	2	D310
	17C1316-1	X1	58	1	D311
	17C1316-2	X1		1	D311
	17C1320-1	M	58-59, 59-25	AR	E105
	17C1320-2	M	58-66, 59-27	AR	E105
1AGQ	17C1322-2	P	59-17	1	E106
1AGQ	17C1323-1	P1	58-62, 59-23	2	E107
1AGJ	17C1324-2	P1	58-55, 59-15	2	E108
1AGQ	17C1325-2	M	58-69	2	E109

AF Class Code or Stock No.	Part Number	Army Source Code	Figure and Index No.	Qty per Article	Micro-film Index
1AGJ	17C1326-2	P	59-11	1	G108
	17C1326-3	X1		1	G108
	17C1326-5	X1		1	G108
1AGQ	17C1328-1	P	58-42	1	E110
1AGJ	17C1329-1	P	58-41	1	E111
1AGQ	17C1329-2	P	58	1	E111
1AGJ	17C1330-2	*	58	1	G109
1AGJ	17C1331-2	P	58-35	1	E112
1AGQ	17C1332-1	P1	58-36	1	G110
1AGQ	17C1334-1	P	58-33	1	E113
1AGQ	17C1334-2	P	58-17	1	E113
1AGQ	17C1335-1	P1	58-25	1	G111, G112, H408
1AGQ	17C1336-1	P	58	1	E114
1AGQ	17C1337-1	*	58-28	1	G113
1AGQ	17C1338-1	P	58-31	1	E115
1AGQ	17C1338-2	P	58-26	1	E115
1AGJ	17C1340-2	P	58-18	1	E116
1AGQ	17C1341-2	*	58	1	G114, G115
1AGJ	17C1341-3	*	58-14	1	
1AGJ	17C1341-4	P1	58	1	
1AGQ	17C1347-1	P	58	2	E117
1AGJ	17C1348-1	P	58	2	D312
	17C1349-1		59-8	1	E118
	17C1350-2	X1		1	H409
	17C1350-3	X1		1	H409
	17C1350-4	X1		1	H409
	17C1350-8		57-64	1	H409
1AGJ	17C1353-2	X1		1	E119
1AGJ	17C1355-3	P1	57-73	1	G116
	17C1355-4	M	57-69	1	G116
1AGJ	17C1356-2	P1	57-17	1	H410, H411, H412
	17C1356-3	X1		1	
1AGJ	17C1357-1	P	57-24	4	E120
1AGJ	17C1358-1	P	57	1	E121
	17C1358-2	X1	57-16	1	E121
1AGQ	17C1358-4	P	57-53	1	E121
	17C1358-6	X1	57	1	E121
1AGJ	17C1359-1	P	57-66	1	E122
1AGQ	17C1360-1	*	58	1	G117
1AGQ	17C1366-1	P	58-22, 59-4	2	E123
1AGJ	17C1665-5	P	64A	2	E124
	17C1665-6	X1	64A-18	2	E124
	17C1775-3	X1	63	1	G118
	17C1777-1	X1	63-18	1	E125
1AGJ	17C1778-1	P1	63-17	1	E126
	17C1780-10	*	63	1	H413
	17C1780-11	X1		1	H413
	17C1780-5	M1		1	H413
	17C1780-7		63-4	1	H413
	17C1786-1	X1	63-14	1	E127
	17C1787-1	M1	63-13	1	E128
	17C1788-2	M1	63-11	1	E129
	17C1789-2	M1	63-16	1	E130
	17C1790-1	*	63-12	4	D013
	17C2221-1			2	
	17C2403-2	M	63-9	1	G119
1AGJ	17C2504-3	P	57-49	1	E131
	17C2504-5	X1	57	1	E131
	17C2504-6	M		1	E131
1AGJ	17D4060-1	P	49	3	E254
	17E2042-1	M		14	E369
	17E4011-3	*	74	1	J056
	17E4011-4	*		1	J056
	17E4011-5	*		1	J056
1AGJ	17P4040-1	P	29	4	
1AGQ	17R3065-12		64-5A	12	K145,
1AGQ	17R3065-2	P1	64	12	K146
1AGJ	17S8070-1		18-42, 18A	5	P073
	17S8070-10		18,18A	2	P073
	17S8070-3		18	5	P073
	17S8070-5		18,18A	24	P073
	17S8070-7	P1	18-22, 18A-22	5	P073
	17S8070-8	P1	18-23, 18A-13	2	P073
	17S8070-9		18,18A	5	P073
	18C1128-1	M	52-33	4	E132
1AGJ	18C1353-5	P	59-7	1	H414
	18C1385-1	X1	58	1	E133
1AGQ	18C1386-1	P	58-64, 59-26	2	E134
1AGQ	18C1388-1	P	58-60, 59-21	2	G120
1AGQ	18C1391-1	P	58	8	E135
1AGJ	18C1392-1	P	58-68, 59-29	2	E136
	18C1434-1		91	4	E137
	18C1434-3	M	91	1	E137
	18C1434-4	M	91	1	E137
1AGJ	18C1448-1	P		4	E138
	18C1458-2	X1	60	1	G121
	18C1458-3	X1	60-17	1	G121
	18C1458-5	X1	60	1	G121
	18C1458-6	X1	60-13	2	G121
	18C1458-7	X1	60	3	G121
	18C1458-8	X1	60	1	G121
1AGJ	18C1459-1	X1	60	3	E139
	18C1459-2	X1	60-11	3	E139
	18C1461-10	X1	60	1	H415
	18C1461-11	X1	60	1	H415
	18C1461-12	X1		1	H415
	18C1461-14	X1		1	H415
	18C1461-7	X1		3	H415
	18C1461-8	X1		3	H415
	18C1461-9	X1	60-14	1	H415
1AGJ	18C1462-4	X1		1	E140
1AGJ	18C1462-5	X1		1	E140
	18C1463-2	X1	60-15	2	G122
	18C1463-3	X1	60	2	G122
1AGQ	18C1464-1	X1	60	1	E141
1AGJ	18C1833-1	X1		10	E143
	18E1052-3		82	1	E371
	18E2028-6		74	1	J057
1AGQ	18E2078-1	P		1	E372
	18E4010-2		89-10	8	L206
	18E4059-25		85	1	
	18E7002-27		94	1	L208, L209, L210
	18S1810-20		17	11	P074
	22C0001-1		50	1	L006
	22C1001-1		50	1	L007
	22C1002-1		50-1	1	L008
	22C1003-1	*	50-2, 64	1	L009
	22C1004-1	*	50-3, 66	1	L010
	22C1005-3		51-15, 63	1	L011
	22C1005-4	M	63-6	1	L011
	22C1006-1	A	50	1	L012
	22C1006-10	A	50-34	1	L012
	22C1006-11	A	50-37	1	L012
	22C1006-12	A	50-40	1	L012
1AGJ	22C1006-13	P	50-7	1	L012
1AGJ	22C1006-14	P	50-8	1	L012
1AGJ	22C1006-15	P	50-12	1	L012
1AGJ	22C1006-16	P	50-13	1	L012
1AGJ	22C1006-17	P	50-14	1	L012
1AGJ	22C1006-18	P	50-15	1	L012
1AGJ	22C1006-19	P	50-16	1	L012
	22C1006-2	A	50	1	L012
1AGJ	22C1006-20	P	50-17	1	L012
1AGJ	22C1006-21	P	50-18	1	L012
1AGJ	22C1006-22	P	50-19	1	L012

AF Class Code or Stock No.	Part Number	Army Source Code	Figure and Index No.	Qty per Article	Micro-film Index
1AGJ	22C1006-23	P	50-20	1	L012
1AGJ	22C1006-24	P	50-21	1	L012
1AGJ	22C1006-25	P	50-23	1	L012
1AGJ	22C1006-26	P	50-24	1	L012
1AGJ	22C1006-27	P	50-29	1	L012
1AGJ	22C1006-28	P	50-30	1	L012
1AGJ	22C1006-29	P	50-32	1	L012
	22C1006-3	A	50	1	L012
1AGJ	22C1006-30	P	50-33	1	L012
1AGJ	22C1006-31	P	50-35	1	L012
1AGJ	22C1006-32	P	50-36	1	L012
1AGJ	22C1006-33	P	50-38	1	L012
1AGJ	22C1006-34	P	50-39	1	L012
1AGJ	22C1006-35	P	50-41	1	L012
1AGJ	22C1006-36	P	50-42	1	L012
	22C1006-37	X1		1	L012
	22C1006-38	M		1	L012
	22C1006-39	X1		1	L012
	22C1006-4	A	50	1	L012
	22C1006-40	X1		1	L012
	22C1006-41	X1		1	L012
	22C1006-42	X1		1	L012
	22C1006-43	X1		1	L012
	22C1006-44	X1		1	L012
	22C1006-45	X1		1	L012
	22C1006-46	X1		1	L012
	22C1006-47	X1		1	L012
	22C1006-48	X1		1	L012
	22C1006-49	X1		1	L012
	22C1006-5	A	50	1	L012
	22C1006-50	X1		1	L012
	22C1006-51	X1		1	L012
	22C1006-52	X1		1	L012
	22C1006-53	X1		1	L012
	22C1006-54	X1		1	L012
	22C1006-55	X1		1	L012
	22C1006-56	X1		1	L012
	22C1006-6	A	50	1	L012
	22C1006-61	A	50	1	L012
	22C1006-62	A	50	1	L012
	22C1006-63	A	50	1	L012
	22C1006-64	A	50	1	L012
	22C1006-65	A	50	1	L012
	22C1006-66	A	50	1	L012
	22C1006-7	A	50-22	1	L012
	22C1006-8	A	50-28	1	L012
	22C1006-9	A	50-31	1	L012
	22C1011-1	*	52	1	
	22C1011-2	*	51-1, 52	1	L013, L014
1AGJ	22C1011-4	A1	52	1	
	22C1012-1		53	1	
	22C1012-3	M		1	L015,
	22C1012-4		53	1	H417
	22C1012-5	*	53	1	
	22C1012-7	*	53	1	
	22C1013-1		54	1	L016
	22C1013-2		54	1	L016
	22C1013-3	*	54	1	L016
	22C1013-4	A1	54	1	L016
	22C1014-1		51-4, 55	1	
	22C1014-100		55A	1	T428,
	22C1014-2		55	1	T429
	22C1014-4		55	1	
	22C1014-5		55	1	
	22C1015-1		57	1	L017
	22C1015-10		57	1	L017
	22C1015-11		57	1	L017
	22C1015-12		57	1	L017
	22C1015-13		57	1	L017
	22C1015-14		57	1	L017
	22C1015-2		57	1	L017
	22C1015-5		57	1	L017
	22C1015-6		57	1	L017
	22C1015-7		57	1	L017
	22C1015-8		57	1	L017
	22C1015-9		57	1	L017
	22C1018-1		52	1	L018
	22C1018-2	A		1	L018
	22C1018-3	*	60	1	L018
1AGJ	22C1018-4	*	60	1	L018
	22C1018-5	*	60	1	L018
1AGJ	22C1018-6	*	60-1	1	L018
	22C1019-3	*	60	1	L019
	22C1019-4	A	60	1	L019
	22C1019-5	*	60	1	L019
	22C1019-6	*	60-28	1	L019
	22C1020-1	*	60	1	L020
	22C1020-2	*	60-20	1	L020
	22C1020-3	*	60	1	L020
	22C1020-4	A	60	1	L020
1AGJ	22C1023-1	P	51-9	1	
	22C1023-2	X1		1	
	22C1023-3	X1		1	T233,
	22C1023-4	X1		1	T234
	22C1023-5	X1		1	
1AGJ	22C1023-6	P	51	1	
	22C1024-1	A	51-10, 61	1	T430
	22C1024-2	A	61	1	T430
	22C1024-3	A	61	1	T430
	22C1024-4	A	61	1	T430
	22C1024-5	A	61	1	T430
	22C1024-6	A	61	1	T430
	22C1024-7	A	61	1	T430
	22C1024-8	A	61	1	T430
	22C1025-1		51-11, 62	1	L021
	22C1026-1	*	51-12, 62	1	L022
	22C1026-2	*	51-13, 62	1	L022
	22C1027-1	*	62	1	H418
	22C1027-2	*	62	1	H418
	22C1027-3	*	62	1	H418
1AGJ	22C1028-1	P	51-24	1	H419
	22C1028-10	X1		1	H419
	22C1028-11	X1		1	H419
	22C1028-12	X1		1	H419
	22C1028-13	P	33, 51-25	2	H419
1AGJ	22C1028-14	P	33	1	H419
1AGJ	22C1028-15	X1	33	1	H419
1AGJ	22C1028-16	P	51	1	H419
1AGJ	22C1028-2	P	51-28	1	H419
1AGJ	22C1028-21	P	73-26	1	H419
	22C1028-22	X1	73	1	H419
	22C1028-23	X1	73	1	H419
1AGJ	22C1028-3	P	51-26	1	H419
1AGJ	22C1028-4	A	51-27	1	H419
1AGJ	22C1028-5	P		1	H419
1AGJ	22C1028-6	X		1	H419
1AGJ	22C1028-7	P		1	H419
1AGJ	22C1028-8	P		1	H419
	22C1028-9	X1		1	H419
	22C1030-1	A	51-22	1	E144
	22C1030-2	A	51-23	1	E144
	22C1031-14	M		1	G123
	22C1031-18	M		1	G123
	22C1031-9	A		1	G123
1AGJ	22C1032-1	P	52	2	E145
1AGJ	22C1033-1	*	52	2	E146
	22C1033-3		52-24	2	E146
1AGJ	22C1034-3	P	52	1	H420
1AGJ	22C1034-4	P	52	1	H420
	22C1034-7		52	1	H420
	22C1034-8		52	1	H420
1AGJ	22C1035-1	P	57-22	2	D314
1AGJ	22C1035-2	P	57-23	6	D314

AF Class Code or Stock No.	Part Number	Army Source Code	Figure and Index No.	Qty per Article	Micro-film Index
	22C1037-1		55, 55A-2	1	H421
	22C1038-1		55, 55A-2	1	H422
	22C1038-2		55-89	1	H422
	22C1111-1	*	52	1	
	22C1111-2	*	52	1	
	22C1111-21	X1	52	4	
	22C1111-3	*	52	1	T235,
	22C1111-4	*	52	1	T145
	22C1111-5	X1		1	
	22C1111-6	X1		1	
	22C1111-7	X1		1	
	22C1111-8	X1		1	
1AGJ	22C1112-1	*	52-69	1	H424
	22C1113-1	M		1	E147
1AGJ	22C1114-1	P2	52-56	1	H425
1AGJ	22C1114-2	P2	52-57	1	H425
1AGJ	22C1114-3	P2	52	1	H425
1AGJ	22C1114-4	P2	52	1	H425
1AGJ	22C1115-1	*	52	1	T155
	22C1115-12		52	1	T155
	22C1115-2	X1	52-14	1	T155
	22C1115-3	X1		1	T155
	22C1116-1	X1	52-40	2	T236
	22C1116-2	X1	52	1	T236
	22C1116-3	X1	52-39	1	T236
1AGJ	22C1117-1	P	52-36	4	E148
1AGJ	22C1120-1	P2	52-59	1	G125
1AGJ	22C1150-1	P	53-42	2	E150
	22C1151-1	A	53-45	1	G126
1AGJ	22C1151-2	P		1	G126
	22C1151-4	X1		1	G126
	22C1152-1		53-40	1	E151
1AGJ	22C1160-1	P	53	1	E152
	22C1160-2	X1		1	E152
1AGJ	22C1178-1	P1	53-35	1	E153
1AGJ	22C1178-2	*		1	E153
1AGJ	22C1200-3	P2	54	1	L024
	22C1200-4	X1	54-41	1	L024
1AGJ	22C1201-1		54-52	2	H426
	22C1201-2		54-29	2	H426
1AGJ	22C1201-3	X1		1	H426
1AGJ	22C1203-1	P2	54-58	1	E154
1AGJ	22C1204-3	P2	54	1	L025
	22C1204-4	X1	54-16	1	L025
	22C1205-1		54	1	
	22C1205-2		54	1	
	22C1205-3		54	1	
	22C1205-4	*	54	1	L026,
1AGJ	22C1205-5	P2	54	1	L027,
1AGJ	22C1205-6	P2	54	1	L028
	22C1205-7	X1	54-27	1	
	22C1205-8		54-51	1	
	22C1206-1	*	54-17	4	E155
	22C1209-1	M	54-23	2	E157
1AGJ	22C1211-1	P	54	1	E158
	22C1211-2	X1	54-5	1	E158
	22C1211-3	X1		1	E158
1AGJ	22C1250-1	P2	55-27, 56-28	2	L029,
	22C1250-2	X1	55-39, 56-40	2	H428, H429
1AGJ	22C1251-1	*	55,56	1	
	22C1251-2	*	55,56	1	L030,
1AGJ	22C1251-3	P2	55,56	1	L031,
	22C1251-4	X1	55-44	2	L032
1AGJ	22C1252-1	*	55,56	1	L033,
	22C1252-2	X1	55,56	1	L034,
1AGJ	22C1252-3	P2	55,56	1	L035,
	22C1252-4	X1	55-26	2	L036
1AGJ	22C1253-1	P1	55,56	1	L037
	22C1253-2	X1	55, 56-60	1	L037
1AGJ	22C1253-3	P2	55,56	1	L037
	22C1253-4	X1	55-60, 56-60	2	L037
1AGJ	22C1254-1	P1	55	1	
	22C1254-2		55	1	L038,
1AGJ	22C1254-3		55	1	L039
	22C1254-4		55-84	1	
	22C1255-1		55	1	H430
	22C1255-2		55-69	1	H430
	22C1256-1		55	1	H431
	22C1256-2		55	1	H431
	22C1257-1		55	2	
	22C1257-2		55	2	
	22C1257-3		55	2	H432,
	22C1257-5		55-70	2	L040
	22C1257-6		55-79	2	
1AGJ	22C1258-1	P1	55-99, 56-100	1	H433, H434
1AGJ	22C1259-1	P	55-6	1	E159
	22C1260-1	*	55	1	
	22C1260-2	X1	55	1	
1AGJ	22C1260-3	*	55,56	1	H435,
	22C1260-4	X1	55,56	1	L041
1AGJ	22C1260-5	P2	55,56	1	
	22C1260-6	X1	55-96, 56-96	1	
1AGJ	22C1262-1	P	55-13, 56-14	2	G127
1AGJ	22C1263-1	P	55-101, 55-102	2	E160
	22C1264-1	M	55-36, 56-37	4	G128
	22C1264-2		55-77	2	G128
	22C1264-3	M	55-18, 56-19	2	G128
	22C1264-4		55-77A	2	G128
	22C1265-2		55-85	2	G129
	22C1265-3	M	55-22, 56-23	1	G129
	22C1265-4	M	55-17, 56-18	1	G129
1AGJ	22C1269-1	P	55-28, 56-29	4	E161
	22C1282-1	P	55-97, 56-98	1	E162
	22C1282-2	M	55-95, 56-97	1	E162
	22C1282-3	P	55-83	1	E162
1AGJ	22C1282-4	P	55-59	1	E162
1AGJ	22C1282-5	P	55-43	1	E162
1AGJ	22C1282-6	P	55-25	1	E162
	22C1282-7	P	55-9, 56-10	1	E162
	22C1282-8	P	55-3, 56-4	1	E162
1AGJ	22C1283-1	*	56, 56A-3	1	E163
	22C1283-2	P1	55-98, 55A-4	1	E163
1AGJ	22C1284-1	*	55,56	4	
	22C1284-2	X1	55,56	4	
1AGJ	22C1284-3	P1	55-47, 56-48	4	G130, G131
	22C1284-4		55-54, 56-55	4	
1AGJ	22C1288-1	P1	55,56	1	L044,
	22C1288-2	X1	55-7, 56-8	1	H436, L045
	22C1291-4	M		1	
	22C1300-1		58	1	L046
	22C1300-10		58	1	L046
	22C1300-11	A	58	1	L046
	22C1300-12	A	58	1	L046
1AGJ	22C1300-13	*	58	1	L046
1AGJ	22C1300-15	A	58	1	L046
	22C1300-2	A	57-21	1	L046

AF Class Code or Stock No.	Part Number	Army Source Code	Figure and Index No.	Qty per Article	Micro-film Index
	22C1300-3		58	1	L046
	22C1300-4	A	59	1	L046
1AGJ	22C1300-5		58	1	L046
1AGJ	22C1300-6	A	59	1	L046
	22C1300-7	A	58	1	L046
	22C1300-8		58	1	L046
	22C1300-9		58	1	L046
1AGJ	22C1301-1	P2	58-46	1	
1AGJ	22C1301-2	P2	59-9	1	L047,
	22C1301-3	X1		1	L048
	22C1301-4	X1		1	
1AGJ	22C1303-1	P	57-63	1	G132
	22C1303-2	X1		1	G132
1AGJ	22C1305-1	P1	57-72	1	G133
1AGJ	22C1306-1	P1	58-43	1	T237
	22C1306-2	*		1	T237
1AGJ	22C1309-1	X1		1	E164
1AGJ	22C1310-1	*	58-15	1	H438
1AGJ	22C1310-2	P	59-5	1	H438
	22C1310-3	X1		1	H438
	22C1310-4	X1		1	H438
	22C1310-7		58	1	H438
1AGJ	22C1310-8	P	58	1	H438
1AGJ	22C1311-1	P	58-57	1	E165
1AGJ	22C1312-1	*	58-34	1	G134,
1AGJ	22C1312-4	P1	58-34	1	H439,
					H440
1AGJ	22C1314-1	P	58-32	2	E166
	22C1318-1	M	57-67	1	E167
	22C1319-1	M	58-12	1	G135
1AGJ	22C1320-1	P1	58-9	1	H441
	22C1320-2	X1	58	1	H441
	22C1320-3	X1	58-10	1	H441
1AGJ	22C1321-1	*	58	1	T156,
1AGJ	22C1321-5	P1	58	1	T238
	22C1321-7		58-24	1	
1AGJ	22C1322-1	X1	58	1	E168
1AGJ	22C1323-1	P	58-20	1	E169
1AGJ	22C1324-1	*	58-36	1	G136
	22C1324-2	X1		1	G136
1AGJ	22C1325-2	A	57-59	1	H442
1AGJ	22C1326-3	X1		1	G137
	22C1328-1	M	58-44	1	E170
1AGJ	22C1331-2	P1	58-4	1	G138
1AGJ	22C1401-3	P1	60-21	1	L050
1AGJ	22C1401-4	P1	60-2	1	L050
1AGJ	22C1401-5	P1	60-29	1	L050
1AGJ	22C1500-1	X1	60	2	E171
1AGJ	22C1501-1	X1	60-16	2	E172
1AGJ	22C1600-1		62	1	N128
	22C1600-2		62	1	N128
	22C1600-3		62-1	1	
	22C1600-4		62	1	
1AGJ	22C1611-1	*	62	1	
1AGJ	22C1611-11	*	62	1	
	22C1611-12	X1	62	1	T239,
1AGJ	22C1611-13	P1	62-32	1	T240,
	22C1611-14	X1	62	1	T241,
	22C1611-2	X1	62	1	T242
	22C1611-6	M	62-45A	2	
	22C1611-7	M	62-40	2	
1AGJ	22C1612-1	*	62	1	
	22C1612-2	X1	62	1	L051,
1AGJ	22C1612-3	P1	62-19	1	L052,
	22C1612-4	X1	62	1	L053
1AGJ	22C1622-1	P	64A-21,	10	G139
			68-18		
1AGJ	22C1622-2	P	62	2	G139
1AGJ	22C1622-3	P	62,69	8	G139
1AGJ	22C1622-4	P	64A	24	G139
	22C1622-5		65-33	4	G139
1AGJ	22C1622-6	P	55-82	12	G139
	22C1622-7		73	4	G139
1AGJ	22C1622-8	P		1	G139

AF Class Code or Stock No.	Part Number	Army Source Code	Figure and Index No.	Qty per Article	Micro-film Index
	22C1650-1	A	64A	1	L055
1AGJ	22C1651-1	*	64A	1	T431,
	22C1651-2	X1	64A	1	T432,
1AGJ	22C1651-3	P1	64A	1	T433,
	22C1651-4	X1	64A-39	1	T434,
					T435
1AGJ	22C1652-1	*	64A	1	T436,
	22C1652-2	X1	64-6	1	T437,
1AGJ	22C1652-3	P1	64A	1	T438
1AGJ	22C1655-1	*	64A	2	
	22C1655-2	X1	64A	2	L061,
1AGJ	22C1655-3	P1	64A,66A	1	L062,
	22C1655-4	X1	64A-27,	1	L063
			66A-31		
1AGJ	22C1656-1	P1	64A-51	1	H447
1AGJ	22C1657-1	P1	64A-2	2	G140
1AGJ	22C1670-100	P1	65A	1	L064
1AGJ	22C1670-2	*	65	1	L064
	22C1670-3	A	65	1	L064
1AGJ	22C1670-4		65A	1	L064
1AGJ	22C1671-1	*	65,66B	2	
	22C1671-2	X1	65,66B	4	
1AGJ	22C1671-4	P1	65-10,	2	T157,
			66B-12		T158,
	22C1671-5	X1	65-15,	1	T159
			66B-16		
	22C1671-7	X1	65,66B	1	
1AGJ	22C1672-1	*	66B	1	
1AGJ	22C1672-10	P1	65	1	
	22C1672-11	X1	66B-36	1	
	22C1672-12	X1	65-66	1	
1AGJ	22C1672-2	*	65	1	T243,
	22C1672-3	X1	66B	1	T439,
	22C1672-4	X1	65	1	T244,
1AGJ	22C1672-5	*	66B	1	T440
1AGJ	22C1672-6	*	65	1	
1AGJ	22C1672-8	X1	65,	1	
			65A-3		
1AGJ	22C1672-9	P1	66B	1	
	22C1673-1	*	66B	1	
1AGJ	22C1673-2	*	65	1	
	22C1673-3	X1	66B	1	
	22C1673-4	X1	65	1	
1AGJ	22C1673-5	P1	66B	1	
1AGJ	22C1673-6	P1	65	1	
	22C1673-7	X1	66B-62	1	
	22C1673-8	X1	65-39	1	
1AGJ	22C1675-1	*	66B	1	T441
	22C1675-2	X1	66B	1	T441
1AGJ	22C1675-3	P1	66B	1	T441
1AGJ	22C1676-1	*	65	1	
	22C1676-2	X1	65	1	
1AGJ	22C1676-3	*	65,66B	2	T245,
1AGJ	22C1676-4	X1	65,66B	2	T246
1AGJ	22C1676-5		65,66B	1	
	22C1676-6		65,	1	
			66B-53		
1AGJ	22C1678-1	X1	65-67,	2	H450
			65A-5		
1AGJ	22C1679-1	P1	65	1	
1AGJ	22C1679-2	P1	65	1	L065,
1AGJ	22C1679-3	X1	65-8	1	H451,
	22C1679-4	X1	65-47	1	L066
1AGJ	22C1680-1	*	65	2	H452
1AGJ	22C1680-2	P	65-4	2	H452
1AGJ	22C1682-1	*	64,66	2	T160
	22C1682-2	X1	64	2	T160
1AGJ	22C1682-5	P	64,66	2	T160
	22C1682-6	X1	64	1	T160
	22C1682-7		64-7	1	T160
	22C1682-8		64	1	T160
1AGJ	22C1683-1	P1	65	1	T442
	22C1683-2		65	1	T442
1AGJ	22C1683-3	*	65	1	T442

AF Class Code or Stock No.	Part Number	Army Source Code	Figure and Index No.	Qty per Article	Micro-film Index
	22C1683-4	X1	65	1	T442
1AGJ	22C1683-5	P1	65	1	T442
	22C1683-6	X1	65-56	1	T442
	22C1684-1	M	64A-42, 66-9	10	E173
	22C1684-2	M	66A-33	2	E173
1AGJ	22C1685-1	*	65	4	E174
1AGJ	22C1685-2	P	65-30, 66B-27	4	E174
1AGJ	22C1688-1	P	65-31	4	D315
	22C1689-1	M	64A-29	2	E175
1AGJ	22C1692-1	*	66B	1	T443
1AGJ	22C1692-11	P1	66B-41, 66C	1	T443
1AGJ	22C1692-12	P1	65-40	1	T443
1AGJ	22C1692-2	*	65	1	T443
	22C1692-3	X1		1	T443
	22C1692-4	X1		1	T443
1AGJ	22C1692-7	*	66B,66C	1	T443
1AGJ	22C1692-8	*	65	1	T443
1AGJ	22C1693-1	*	65A-1, 66B	4	T248, T249
	22C1693-2	X1	66B	4	
1AGJ	22C1693-3	P1	65,65A	4	
	22C1693-4	X1	65-29, 66B-40	4	
	22C1694-1		62	1	E176
1AGJ	22C1695-1	M		5	E177
1AGJ	22C1695-2	M		1	E177
1AGJ	22C1696-1	P	64-4	1	G147
	22C1696-10	M		1	G147
1AGJ	22C1696-11	P	64-3	1	G147
1AGJ	22C1696-2	P	64-5	1	G147
1AGJ	22C1696-3	*	64	1	G147
1AGJ	22C1696-4	P	51-21	1	G147
	22C1696-5	P	54-6	1	G147
1AGJ	22C1696-6	X1		1	G147
	22C1696-7	X1		1	G147
1AGJ	22C1697-1	X1		6	E178
1AGJ	22C1697-2	X1		10	E178
1AGJ	22C1699-1	*	65-73	1	G148
1AGJ	22C1699-2	*	65-74	1	G148
1AGJ	22C1699-3	*	65-72	1	G148
	22C1699-4	X1		1	G148
	22C1699-5	X1		1	G148
	22C1699-6	X1		1	G148
1AGJ	22C1699-7	P	66	1	G148
1AGJ	22C1699-8	P	66	1	G148
	22C1699-9	P	66	1	G148
1AGJ	22C1700-1	*	66A	1	L068
1AGJ	22C1700-2	A	66A	1	L068
1AGJ	22C1701-1	*	66A	1	T444,
	22C1701-2	X1	66A	1	T445,
1AGJ	22C1701-3	P1	66A	1	T446,
	22C1701-4	X1	66A-43	1	T447
1AGJ	22C1702-1	*	66A	1	L073, L074, L075
	22C1702-2	X1	66A	1	
1AGJ	22C1702-3	P1	66A	1	
	22C1702-4	X1	66A-56	1	
1AGJ	22C1703-1	*	64A	1	
	22C1703-10	X1	66A-17	1	L076,
1AGJ	22C1703-2	*	66A	1	L077,
	22C1703-3	X1	64A	1	L078,
1AGJ	22C1703-5	P1	66A	1	L079,
1AGJ	22C1703-6	*	66A	1	L080,
	22C1703-7	X1	66A-49	1	L081,
	22C1703-8	X1	66A	1	L082,
1AGJ	22C1703-9	P1	66A	1	L083
1AGJ	22C1705-1	P	66A-58	1	H454
1AGJ	22C1706-1	P	66A-2	1	T448
1AGJ	22C1706-2	P	66A-60	1	T448
	22C1707-1	*	66B-6	2	U1,
	22C1707-3	X1	66B	1	T250,
	22C1707-4	X1	66B	1	T251,
1AGJ	22C1707-5	P1	66B	1	T252
1AGJ	22C1707-6	P1	66B	1	

AF Class Code or Stock No.	Part Number	Army Source Code	Figure and Index No.	Qty per Article	Micro-film Index
1AGJ	22C1708-1	M	65-5, 66B-7	2	G149
	22C1713-1	M	66A-67	1	G150
	22C1713-2	M	66A-68	1	G150
	22C1713-3		20-8	2	G150
	22C1713-4	M	73-7	1	G150
	22C1713-5	M	73-6	1	G150
	22C1713-6		20-9	1	G150
	22C1713-7	M	73	1	G150
1AGJ	22C1719-1	P	64-6	2	G152
1AGJ	22C1719-2	X1	64	2	G152
	22C1730-100	P1	66B,66C	1	L084
1AGJ	22C1730-2	*	66B	1	L084
	22C1730-3	A	66B	1	L084
1AGJ	22C1730-4	*	66B,66C	1	L084
1AGJ	22C1750-1	P1	61-21	1	T161
1AGJ	22C1751-1	P	61-4	3	G153
1AGJ	22C1752-1	P1	61-7	4	T162
1AGJ	22C1753-12	P	57-28	1	H455
1AGJ	22C1753-13	P	57-30	1	H455
1AGJ	22C1753-14	P	65-34	4	H455
1AGJ	22C1753-15	P	64A-7, 66A-12	5	H455
	22C1753-16		20,21	1	H455
	22C1753-17		20,21	4	H455
	22C1753-18	P	55-16, 56-17	5	H455
	22C1753-19		20,21	2	H455
	22C1753-2	M	62	2	H455
	22C1753-20	M1	20-66, 22-78	5	H455
	22C1753-21	M1	20-71, 22-83	3	H455
	22C1753-22	M1	20-62,	1	H455
	22C1753-23	M1	20, 22-79, 67	2	H455
	22C1753-25	M	65-9	2	H455
1AGJ	22C1753-28	P	64A-52	1	H455
	22C1753-3	M	62	1	H455
1AGJ	22C1753-31	P	57-40	1	H455
1AGJ	22C1753-32	P	66A-5	1	H455
1AGJ	22C1753-35	P	66A-58A	1	H455
	22C1753-36	M	65-48	2	H455
	22C1753-37		20,21	1	H455
	22C1753-38		20,21	1	H455
	22C1753-4	M	62, 66B-57A	1	H455
1AGJ	22C1753-40	P	55-33, 56-34	4	H455
	22C1753-42		20	1	H455
	22C1753-43	M	63-3A	1	H455
	22C1753-44	M1	20-58, 22-71	3	H455
	22C1753-47	M1	20-50, 22-64	3	H455
1AGJ	22C1753-48	P	64A-32	1	H455
1AGJ	22C1753-49	P	63-24	2	H455
1AGJ	22C1753-50	P	57-41	1	H455
	22C1753-51		20-21	1	H455
	22C1753-52		20-22	1	H455
	22C1753-53		20-25	1	H455
	22C1753-54		20-26	1	H455
	22C1753-55		20-20	1	H455
	22C1753-56		20-23	1	H455
	22C1753-57		20-19	1	H455
	22C1753-58		20-18	1	H455
	22C1753-59		20-24	1	H455
	22C1753-6	M	54-26	2	H455
	22C1753-60	M	73	1	H455
	22C1753-61	M	73	1	H455
	22C1753-62	M	73	1	H455
	22C1753-63	P		1	H455
1AGJ	22C1753-64	P	68-9	2	H455

AF Class Code or Stock No.	Part Number	Army Source Code	Figure and Index No.	Qty per Article	Micro-film Index
1AGJ	22C1753-65	P	66A-19	1	H455
1AGJ	22C1753-66	P	67-11	6	H455
	22C1753-67	M	73	1	H455
	22C1753-69	M	69	2	H455
1AGJ	22C1753-7	M	65-25	2	H455
1AGJ	22C1753-70	P	20,21, 68-19	2	H455
	22C1753-71	M	69	1	H455
	22C1753-72	M		2	H455
1AGJ	22C1753-73	P	56	12	H455
1AGJ	22C1753-74	P	62	1	H455
	22C1753-75	M1	20,21	1	H455
1AGJ	22C1753-76	P	58-58, 59-19	2	H455
1AGJ	22C1753-8	P	64A-22	2	H455
	22C1753-80		62	1	H455
	22C1753-83		19	2	H455
	22C1753-84		92	1	H455
	22C1753-86	M	62	1	H455
	22C1753-87		62	1	H455
1AGJ	22C1753-88	M	73	1	H455
1AGJ	22C1753-89	M	73	1	H455
	22C1763-16	M1		1	
	22C1763-17	M1		4	
	22C1763-18	M1		1	
	22C1763-19	M1		2	
1AGJ	22C1769-1	P	51-16	1	H456
	22C1769-10	X1		1	H456
	22C1769-2	A	51-17	1	H456
1AGJ	22C1769-4	P	51-20	1	H456
1AGJ	22C1769-5	X1		1	H456
	22C1769-6	X1		1	H456
	22C1769-8	X1		1	H456
	22C1769-9	P	51-18	1	H456
1AGJ	22C1770-1	X1		10	E179
	22C1772-1	*	62	1	T253, T254, T255
	22C1772-2	X1	62	1	
1AGJ	22C1772-3	*	62	1	
	22C1772-4	X1	62	1	
1AGJ	22C1772-5	P1	62-46	1	
	22C1772-6	X1	62	1	
1AGJ	22C1772-7	*	62	1	
1AGJ	22C1772-8	*	62	1	
	22C1772-9	X1	62	1	
1AGJ	22C1773-1	*	51	1	H461
1AGJ	22C1773-2	P	69-16	1	H461
1AGJ	22C1773-3	P	67,68	1	H461
1AGJ	22C1773-4	P	68	1	H461
1AGJ	22C1773-9	P	51-19	1	H461
	22C1800-1	P	50-9	12	E181
1AGJ	22C1801-1	X1	50	24	E182
1AGJ	22C1802-1	P	50-27	6	E183
1AGJ	22C1825-1	P1	63	1	H462
	22C1825-2	X1	63-2	1	H462
1AGJ	22C1827-1	P1	63	1	G154,
	22C1827-2	X1	63-23	1	L086
1AGJ	22C1829-8	A	63-7	1	H464
	22C1829-9	P	63	1	H464
	22C1831-1	A	63-26	1	G155
1AGJ	22C1831-2	P		1	G155
	22C1831-3	X1		1	G155
1AGJ	22C1851-1	X1		12	E184
	22C1851-2	X1		12	E184
	22C1851-3	X1		12	E184
1AGJ	22C1851-4	P		1	E184
	22C1851-5	X1		1	E184
	22C1852-1	M		1	E185
	22C1852-2	M		1	E185
	22C1852-3	M1	63-19	1	E185
	22C1900-1	*	50-4, 67	1	U2
1AGJ	22C1901-1	P1	67-1, 68-1	2	H465
	22C1901-2	M1	67-6	2	H465

AF Class Code or Stock No.	Part Number	Army Source Code	Figure and Index No.	Qty per Article	Micro-film Index
	22C1902-1	*	67-14, 68-5	2	G156
	22C1902-3	*		2	G156
	22C1903-1	X1	70-5	3	E186
1AGJ	22C1904-1	X1		8	E187
	22C1905-1	X1		2	G157
	22C1905-2	X1		2	G157
1AGJ	22C1907-1	P	67-9, 70-7	3	G158
	22C1908-1	X1	67-10, 70-10	3	E188
1AGJ	22C1909-1	P	67-7, 70-9	3	E189
1AGJ	22C1911-1	P1	67-70	3	G159
	22C1911-2	X1	67-5, 70-4	3	G159
1AGJ	22C1912-1	*	67-18, 68-13	2	H467
1AGJ	22C1912-2	*	68-23	1	H467
	22C1912-4	X1		2	H467
	22C1912-5	X1		1	H467
1AGJ	22C1914-1	*	67,68	2	
	22C1914-2	X1	68	2	H468,
1AGJ	22C1914-3	P1	67-16	2	L089,
	22C1914-4	X1	68-12	1	L090
1AGJ	22C1916-1	*	68	1	H469,
1AGJ	22C1916-3	P1	68	1	L093
1AGJ	22C1917-1	P	67-8	1	E190
1AGJ	22C1918-1	P	70-8	3	E191
	22C1920-1	*	50-5, 68	1	U3
	22C1925-1	*	69	1	L095
1AGJ	22C1925-3	*	50-6	1	L095
1AGJ	22C1926-1	P1	69-1	1	H470, G160, G161
	22C1926-2	X1	69	1	
1AGJ	22C1927-1	*	69	1	U4
	22C1927-2	X1	69	1	U4
1AGJ	22C1927-3	P1	69-5	1	U4
	22C1927-4	X1	69	1	U4
	22C1929-1	M	69-7	2	G162
	22C1929-2	M		2	G162
1AGJ	22C1930-1	*	69	1	H471
	22C1930-2	X1	69	1	H471
1AGJ	22C1930-3	P1	69-14	1	H471
	22C1930-4	X1	69	1	H471
1AGJ	22C1931-1	*	69-9	1	G163
	22C1931-3	X1		1	G163
	22C1931-4	X1		1	G163
1AGJ	22C1932-1	*	69	1	L097, L098
1AGJ	22C1932-3	P1	69-12	1	
	22C1932-4	X1	69	1	
1AGJ	22C1933-1	P1	69-2, 70	1	H472
1AGJ	22C1933-2	P	70-10	1	H472
	22C1933-3	M1	70-12	1	H472
	22C1933-4	M1		1	H472
	22C1954-1		67-12, 68-4	1	G165
1AGJ	22C1955-1	P	67,68	1	G166
	22C2001-1		50,71	1	L099
1AGJ	22C2103-1	P1	57	1	L101,
	22C2103-2	X1	57-30	1	L102
1AGJ	22C2104-1		57-46	1	G167
1AGJ	22C2105-1	P	57-35	2	G168
	22C2106-1		58	1	H473
	22C2106-2		58-52	1	H473
1AGJ	22C2107-1	*	57	1	T256
	22C2107-2	X1	57	1	T256
1AGJ	22C2107-3	P	57-51	1	T256
	22C2107-4	X1	57	1	T256
	22C2108-1	M	57-60	1	E192
	22C2108-2	M	57-31	1	E192
1AGJ	22C2109-1	P	57	1	G169

AF Class Code or Stock No.	Part Number	Army Source Code	Figure and Index No.	Qty per Article	Micro-film Index
1AGJ	22C2109-2	P	57-45	1	G169
	22C2111-1	M	57-39	2	E193
	22C2112-1		57-32	1	E194
	22C2114-1	A	58	1	H475,
1AGJ	22C2114-2	P1	58	1	H476,
					H477
	22C2115-1		57	1	C170
1AGJ	22C2116-1	P1	57	1	G171
	22C2116-2	X1		1	G171
	22C2200-1	*	71-1,	1	L103
			72		
	22C2201-1	M	72-19	1	E195
	22C2202-1	M	72-20	1	E196
1AGJ	22C2203-1	P	72-12	1	E197
	22C2204-1	M	72-8	1	G172
	22C2204-2	M	71-15	1	G172
	22C2204-3	M	71-17	1	G172
	22C2300-1		71-2,	1	L104
			73		
1AGJ	22C2301-1	P1	73-1	1	
	22C2301-10	X1	73	1	
1AGJ	22C2301-11	P1	72	1	
	22C2301-3		73-3	1	
	22C2301-4	X1	73-11	1	T257,
	22C2301-5	X1		2	U5
1AGJ	22C2301-6	P1	73-4	1	
1AGJ	22C2301-7	P1	72-13	1	
1AGJ	22C2301-8	P1	72-10	1	
1AGJ	22C2301-9	P1	73	1	
1AGJ	22C2302-3	P1	73-11	1	H480
	22C2307-1		73-19	1	H482
	22C2307-2		73	1	H482
	22C2308-1		73-17	1	G173
	22C2308-2		73	1	G173
	22C2309-1	X1	73	1	G174
	22C2309-2	X1		1	G174
	22C2311-3	P	73	1	G175
1AGJ	22C2312-1	X1	73	1	G176
	22C2313-1	X1	73	1	E199
	22C2314-1	M	72-6,	5	E200
			73-5		
	22C2315-1		73	1	E201
	22C2316-1	X1	73	2	E202
	22C2317-1	X1	73	1	E203
	22C2320-1	M1		1	E204
	22C2321-1	X1	73	1	E205
	22C2321-2	X1	73	1	E205
	22C2323-1	X1		1	E207
1AGJ	22C2327-1	P	73	1	E209
1AGJ	22C2327-2	P		1	E209
	22C2328-1		28-2	1	L106
	22C2328-14		28	1	L106
	22C2328-16		28	1	L106
	22C2328-2		28	1	L106
	22C2328-3		28	1	L106
	22C2328-4		28	1	L106
	22C2328-5		28	1	L106
	22C2330-6		19-37	1	H485
	22C2330-7		73-15	1	H485
	22C2330-8	P1	73	1	H485
	22C2331-3	X1	73	1	H486
	22C2338-1		73-20	1	H487
	22C2338-2		73-22	1	H487
	22C2338-3		73-8	1	H487
1AGJ	22C2338-4	P	73	1	H487
	22C2338-5	P	73	1	H487
1AGJ	22C2338-6	P	73	1	H487
	22C2400-1	A	71-3	1	L107
1AGJ	22C2400-10	P	71-11	1	L107
	22C2400-11	P	71-13	1	L107
	22C2400-12	P	71-14	1	L107
1AGJ	22C2400-13	P	71-16	1	L107
1AGJ	22C2400-14	P	71-17	1	L107

AF Class Code or Stock No.	Part Number	Army Source Code	Figure and Index No.	Qty per Article	Micro-film Index
1AGJ	22C2400-15	P	71-19	1	L107
	22C2400-16	M	71-20	1	L107
	22C2400-17	M	71-22	1	L107
1AGJ	22C2400-18	P	71-23	1	L107
	22C2400-19	X1		1	L107
	22C2400-2	A	71-9	1	L107
	22C2400-20	X1		1	L107
	22C2400-21	X1		1	L107
	22C2400-22	X1		1	L107
	22C2400-23	X1		1	L107
	22C2400-24	X1		1	L107
	22C2400-25	X1		1	L107
	22C2400-26	X1		1	L107
	22C2400-27	X1		1	L107
	22C2400-28	M		1	L107
	22C2400-29	M		1	L107
	22C2400-3	A	71-12	1	L107
	22C2400-30	X1		1	L107
	22C2400-31	A	71	1	L107
	22C2400-32		71	1	L107
	22C2400-33	A	71	1	L107
	22C2400-34	A	71	1	L107
	22C2400-35	A	71	1	L107
	22C2400-36	A	71	1	L107
1AGJ	22C2400-37	P	71	1	L107
1AGJ	22C2400-38	P	71	1	L107
	22C2400-40	X1	71	1	L107
	22C2400-5	A	71-18	1	L107
	22C2400-6	A	71-21	1	L107
1AGJ	22C2400-7	P	71-4	1	L107
1AGJ	22C2400-8	P	71-5	1	L107
1AGJ	22C2400-9	P	71-10	1	L107
1AGJ	22C2401-1	P	71-6	6	E210
1AGJ	22C2402-1	P	71-7	6	E211
	22C2610-1	*	35	1	L109
	22C2612-1	*		1	G178
	22D0001-1		40	1	L132,
					L133
	22D1001		40-2	1	
1AGJ	22D1001-1		41-1	1	
1AGJ	22D1001-11		41	1	
1AGJ	22D1001-13		41	1	L134,
1AGJ	22D1001-14		41	1	L135,
1AGJ	22D1001-16		41	1	L136
	22D1001-17		41	1	
	22D1001-18		41	1	
	22D1173-1	M	47-11	1	E300
	22D1174-10		49	1	G247
1AGJ	22D1174-11	P	46-7	2	G247
1AGJ	22D1174-12	P	46-4	1	G247
1AGJ	22D1174-13	P	46-2	1	G247
1AGJ	22D1174-14	P	46-10	1	G247
1AGJ	22D1174-15	P	48-7	1	G247
1AGJ	22D1174-16	P	48-5	1	G247
1AGJ	22D1174-17	P	48-10	1	G247
	22D1174-18	*	48-15	1	G247
1AGJ	22D1174-19	P	48-2	1	G247
	22D1174-2	P	47-2	1	G247
	22D1174-20		48-16	1	G247
	22D1174-21		49-10A	2	G247
	22D1174-23		49-6	2	G247
	22D1174-24		49-9A	2	G247
	22D1174-27		49-7	1	G247
	22D1174-28		49-13A	1	G247
	22D1174-29		49-9	1	G247
	22D1174-3	P	47-7	1	G247
	22D1174-30		49-10	1	G247
	22D1174-4	P	47-4	1	G247
	22D1174-5	P	47-13	1	G247
	22D1174-6	P	47-10	1	G247
	22D1174-7		49-1	2	G247
	22D1174-8		49-14	2	G247
	22D1174-9		49-25	2	G247

AF Class Code or Stock No.	Part Number	Army Source Code	Figure and Index No.	Qty per Article	Micro-film Index
	22D2001-1		42-1	1	
1AGJ	22D2001-12	P1	43	1	
	22D2001-2		43-1	1	L145,
1AGJ	22D2001-5		42	1	L146
1AGJ	22D2001-6		43	1	
1AGJ	22D2116-1	P	43-5	2	D321
1AGJ	22D2116-4	P	43	2	D321
1AGJ	22D2117-1	P	42-8	1	E322
1AGJ	22D2117-2	P	42	1	E322
1AGJ	22D2117-3	*	42	1	E322
1AGJ	22D2117-4	*	42	1	E322
1AGJ	22D2117-5	P	42	1	E322
1AGJ	22D2117-6	P	42	1	E322
1AGJ	22D2118-1	P	42-7	1	E323
	22D3001-1		40-4, 44-1	1	L168
	22D3001-2	*	40,44	1	L168
	22D3001-3	A	44	1	L168
1AGJ	22D3041-1	P1	44-3	4	J011
1AGJ	22D3043-1	P	44-2	4	E330
1AGJ	22D3044-1	A	44-6	8	G279
1AGJ	22D3044-2	P1	44	88	G279
1AGJ	22D3044-3	P1	44	80	G279
1AGJ	22D3045-1	P1	44-5	48	E331
1AGJ	22D3046-1	*	44	2	U37
1AGJ	22D3046-11	P1	44	2	U37
1AGJ	22D3046-12	P1	44	2	U37
1AGJ	22D3046-13	P1	44	2	U37
1AGJ	22D3046-14	P1	44	2	U37
1AGJ	22D3046-15	P1	44-7	2	U37
1AGJ	22D3046-16	P1	44-8	2	U37
1AGJ	22D3046-2	*	44	2	U37
1AGJ	22D3046-3	*	44	2	U37
1AGJ	22D3046-4	*	44	2	U37
1AGJ	22D3046-5	X1	44-25	2	U37
1AGJ	22D3046-6	X1	44	2	U37
1AGJ	22D3046-7	P	44-16	8	U37
1AGJ	22D3046-8	*	44	2	U37
1AGJ	22D3046-9	*	44	2	U37
1AGJ	22D3047-1	*	44	8	J012
1AGJ	22D3047-2	P1	44	8	J012
1AGJ	22D3047-3	X1	44-24	8	J012
1AGJ	22D3049-1	X1	44-23	4	J013
1AGJ	22D3050-1	P1	44-14	4	L171,
	22D3050-2	X1		4	J014, J015
1AGJ	22D3051-1	X1		4	E332
1AGJ	22D3052-1	*	44-18	4	G280
1AGJ	22D3052-2	*	44-19	4	G280
1AGJ	22D3053-1	*	44-21	8	G281
1AGJ	22D3054-1	P1	44-12	4	G282
1AGJ	22D3055-1	*	44	4	E333
1AGJ	22D3055-2	P1	44-13	4	E333
	22D3057-1		44	1	L172
1AGJ	22D3057-3	X1	44	1	L172
1AGJ	22D3057-4	*	44	1	L172
1AGJ	22D3066-1	*	44	1	J017
	22D3066-2	X1	44-30	1	J017
1AGJ	22D3066-3	P1	44-28	1	J017
1AGJ	22D3066-4	P1	44	1	J017
1AGJ	22D3068-1	P1	45-11	1	J018
1AGJ	22D3073-2			1	L173
1AGJ	22D3074-1			2	J019
	22D3076-16	*	34	1	
1AGJ	22D3076-17	*	34	1	U38,
	22D3076-23	A	33-31	1	U39
1AGJ	22D3076-24	P1	34	1	
1AGJ	22D3097-1	P1	34-4	1	G285, G286
1AGJ	22D3169-1	P	45-5	24	E341
1AGJ	22D3169-2	P	45-4	24	E341
1AGJ	22D3170-1	P	45-3	9	E342

AF Class Code or Stock No.	Part Number	Army Source Code	Figure and Index No.	Qty per Article	Micro-film Index
1AGJ	22D3171-1	P1	45-12	3	E343
1AGJ	22D3171-2	P1	45-2	9	E343
1AGJ	22D3172-1	*	44	1	U40
	22D3172-2	X1	44-27	1	U40
1AGJ	22D3172-3	P1	44-26	1	U40
1AGJ	22D3174-1	*	44	8	G289
1AGJ	22D3175-1	P	44	8	E344
1AGJ	22D3176-1	P	44	2	E345
1AGJ	22D3178-2	P1	34-8	1	J031
1AGJ	22D3181-1	X1	44-29	1	J034
	22D4001-22	*	46	1	U41, U42, T273
	22D4002-19	*	47	1	L177,
	22D4002-2	*	47	1	L178, L179, J035
	22D4003-18	*	48	1	L180,
	22D4003-19		48	1	L181, L182, J036, J037
	22D4004-1		49	1	
	22D4004-100		49-23	1	
	22D4004-107		49-20	1	
	22D4004-125	M		1	
	22D4004-128	M		1	
	22D4004-129	M		1	
	22D4004-130	M		1	
	22D4004-131	M		1	
	22D4004-136	M	49	1	
	22D4004-140		49	1	
	22D4004-141	*	49	1	
	22D4004-144	M	49	1	
	22D4004-146	M	49-30	1	
	22D4004-147	M	49-32	1	
	22D4004-154	*	49	1	
	22D4004-156	M	49-11B	1	
	22D4004-158	M	49-13B	1	
	22D4004-160	M	49-15B	1	
	22D4004-162	M	49-17B	1	
	22D4004-181		49	1	
	22D4004-2	M	49-2	1	U43,
	22D4004-29		49	1	U44,
	22D4004-3	M	49-3	1	U45,
	22D4004-4	M	49-4	1	U46,
	22D4004-41	M		1	U47,
	22D4004-42	M		2	T274,
	22D4004-43	M		1	U48,
	22D4004-44	M		3	U49
	22D4004-45	M		1	
	22D4004-46	M		1	
	22D4004-47	M		1	
	22D4004-48	M		1	
	22D4004-49	M		1	
	22D4004-5	M	49-5	1	
	22D4004-50	M		1	
	22D4004-51	M		1	
	22D4004-52	M		1	
	22D4004-53	M		1	
	22D4004-54	M		1	
	22D4004-55	M		1	
	22D4004-56	M		1	
	22D4004-57	M		1	
	22D4004-58	M		3	
	22D4004-59	M		1	
	22D4004-6	*	49-6	1	
	22D4004-60	M		1	
	22D4004-61	M		1	
	22D4004-62	M		1	
	22D4004-63	M		1	

AF Class Code or Stock No.	Part Number	Army Source Code	Figure and Index No.	Qty per Article	Micro-film Index
	22D4004-7	*	49-7	1	
	22D4004-80	*	49	1	
	22D4004-81	M	49-29	1	U43,
	22D4004-82	M	49-31	1	U44,
	22D4004-83	M	49-27	1	U45,
	22D4004-88	M		1	U46,
	22D4004-92	M		1	U47,
	22D4004-95	M	49-11B	1	T274,
	22D4004-96	M	49-13	1	U48,
	22D4004-97	M	49-15	1	U49
	22D4004-98	M	49-17	1	
	22D4004-99		49-22	1	
1AGJ	22D4058-1	P		1	A305, A306
	22D4062-1	M	48-3	1	D324
	22D4064-1	M	48-11	1	E350
	22D4064-2	M	48-12	2	E350
	22E0001-1		74	1	L211
	22E1003-1	*		1	E374
	22E1005-1	*	83	1	L212
	22E1005-10		83	2	
	22E1005-2	A	83-34	1	L212
	22E1005-3	M	83-39	2	L212
1AGJ	22E1005-4	P1		1	L212
	22E1005-5	M	83-37	1	L212
	22E1005-6	M	83-38	1	L212
	22E1005-7	M		1	L212
	22E1005-9	M	83-40	1	L212
	22E1053-1	M	80-12	3	E375
	22E1053-2	M	80-13	3	E375
	22E1054-1		80-1	1	E376
	22E1055-1		80-3	1	E377
	22E1055-2		80-4	1	E377
	22E1080-2		83-13	1	
	22E1080-3		83-14	1	L214
	22E1080-7	M	83-15	2	L215
	22E1080-9		83	1	J059
	22E1081-10		84-17	1	
	22E1081-11		84-21	1	
	22E1081-26		84-20	1	
	22E1081-3	M	84-19	1	
	22E1081-30		83-22	1	
	22E1081-31		84-12	1	
	22E1081-32		84-15	1	
	22E1081-37		84	1	
	22E1081-38		84-10	1	L216,
	22E1081-40		84-11	1	J060
	22E1081-43		84-16	1	
	22E1081-44		84	1	
	22E1081-46		84	1	
	22E1081-48		84	1	
	22E1081-5		84-22	1	
	22E1081-50		84	1	
	22E1081-6		81-8	1	
	22E1081-8		84-13	1	
	22E1081-9		84	1	
	22E1098-1	M1		1	G320
	22E1098-2	M1		1	G320
	22E1098-3	M1		1	G320
	22E1098-4	M1		1	G320
	22E1098-7	M1		1	G320
	22E1160-1	*	74-12	1	J062
	22E1175-1	*	46-17, 75	1	J064, J065
	22E1175-2	*	75	1	
	22E1176-1	*	47-16, 75	1	
	22E1176-2	M	75-15	1	J066,
	22E1176-3	M		1	J067,
	22E1176-4	M	75	1	J068
	22E1176-6	*	75	1	
	22E1177-1	*	48-20	1	L223
	22E1177-2	*	75	1	L223
	22E1178-1	M1	75-3	1	J069
	22E1178-2	M1	75-21	1	J069
	22E1178-3	M1	75-11	2	J069
	22E1178-5	M1		2	J069
	22E1178-6	M1		1	J069
	22E1178-7	M1		1	J069
	22E1178-8	M1		2	J069
	22E1178-9	M1		2	J069
	22E1179-1	*	76	1	U56
	22E1179-2	*	76	1	U56
	22E1180-1	M1	75-17	1	J070
	22E1183-1			1	
	22E1187-1		80	1	L225
	22E1187-2		80	1	L225
	22E1187-3		80	1	L225
	22E1188-1		80	1	
	22E1188-14		80	1	L226,
	22E1188-16		80	1	L227,
	22E1188-9		80	1	L228
	22E1189-1		82	1	L229
	22E1189-6		82	1	L229
	22E1190-1		82-27	1	L230
	22E1194-1	M1	82-17	1	E384
	22E2000-1		77	1	L231
	22E2000-3	M	74-21	1	L231
	22E2000-6		77	1	L231
	22E2008-2	*	77-8	1	J086
	22E2008-3	A	77	1	J086
	22E2009-1	*	77-18	1	J087
	22E2010-2		77-19	1	J088
	22E2010-3		77	1	J088
	22E2011-1		77-31	1	L236
	22E2011-2	M		1	L236
	22E2013-1		77	1	J089
	22E2017-1	*	77-21	1	J090
	22E2019-1		77	1	L237
	22E2023-1		77-2	1	J091
	22E2024-1		77-10	1	G322
	22E2024-2		77-11	1	G322
1AGJ	22E2025-3	M		1	G323
	22E2025-4	*	77-42	1	G323
	22E2027-1		77-4	1	J092
	22E2028-1		77	1	J093
	22E2028-2		77-12	2	J093
	22E2028-3		77	2	J093
	22E2030-1		77-38	1	L239
	22E2035-1	*	77-3	2	J094
	22E2036-1	*	77-41	1	L240
1AGJ	22E2036-2	M		1	L240
	22E2038-3		80	1	L241
	22E2038-5		80-29	1	L241
	22E2039-1		80-7	1	J095
	22E2040-1		78	1	L242
	22E2040-2		78	1	L242
	22E2040-3		78	1	L242
	22E2040-4		78	1	L242
	22E2040-5		78	1	L242
	22E2040-6		78	1	L242
	22E2041-1		80	1	J096
1AGJ	22E2042-1		80-5	1	J097
	22E2044-1	*	77	1	G324
	22E2044-101		77-16	1	G324
	22E2044-103		77-17	1	G324
	22E2044-3	*	77	1	G324
1AGJ	22E2044-5	P	77	2	G324
	22E2051-1		77-5	1	G325
	22E2053-14	M1		2	J098, J099
	22E2054-1	M1		1	G326
	22E2055-1	M1		1	G327
	22E2056-1		77-23	1	J100
	22E2056-2	A	77	1	J100
	22E2056-3	A	77	1	J100
	22E2056-5	A	77	1	J100
	22E2057-1	M1	77	1	J101
	22E2058-1	M1	77	1	G328
9285	22E2061-14	M1		1	J102

AF Class Code or Stock No.	Part Number	Army Source Code	Figure and Index No.	Qty Per Article	Micro-film Index
9285	22E2061-15	M1		1	J102
9285	22E2061-16	M1		1	J102
	22E2061-18	M1		1	J102
	22E2061-19	M1		1	J102
	22E2061-2	M1		1	J102
	22E2061-20	M1		1	J102
	22E2061-22	M1		1	J102
	22E2061-28	M1		1	J102
	22E2061-6	M1		1	J102
	22E2061-7	M1		1	J102
	22E2061-8	M1		1	J102
1AGJ	22E2062-1	*	77-43	1	J103
	22E2062-2	M		1	J103
	22E2064-1		80-22	1	J104
	22E2065-1		80-21	1	J105
	22E2068-1		78-23	1	G330
	22E2068-2		78-24	1	G330
	22E2068-3		78-25	1	G330
	22E2068-4		78	1	G330
	22E2069-1		78-2	1	J106
	22E2069-2		78	1	J106
	22E2071-1		78	1	J107
	22E2071-2		78	1	J107
	22E2071-3		78	1	J107
	22E2071-4		78	3	J107
	22E2071-5		78	1	J107
	22E2071-7		78	1	J107
	22E2071-8		78	1	J107
	22E2071-9		78	1	J107
	22E2072-1		78-1	1	L245
	22E2072-7		78	1	L245
	22E2074-1		77	1	J108
	22E2074-3		77	1	J108
	22E2075-1	M1		1	J109
1AGJ	22E2077-1		80-50	1	J110
1AGJ	22E2077-2		80-51	1	J110
1AGJ	22E2077-4		80-39	1	J110
	22E2078-4		80	1	L246
	22E2078-5		80	1	L246
	22E2078-6		80	1	L246
	22E2078-7		80	1	L246
	22E2078-8		80	1	L246
	22E2078-9		80	1	L246
	22E2079-2		80	1	J111
	22E2079-3		80	1	J111
1AGJ	22E2081-2	P		1	G331
	22E2082-1	M	77	2	E389
	22E2083-1		77-7	1	G332
	22E2084-1	*		1	G333
	22E2085-1	*	77-9	1	G334
	22E2088-1	M		2	E390
	22E2089-1	M1		32	E391
	22E2090-1	M		2	E392
	22E2092-1		80	2	E393
	22E2092-2		80	1	E393
	22E2093-1		77-20	1	G335
	22E2100-1		80-19	1	L249
	22E2100-11		81	1	L249
	22E2100-12		80	1	L249
	22E2100-3	M	80	64	L249
	22E2100-4	M	80	5	L249
	22E2100-5		80	1	L249
	22E2100-8		80	1	L249
	22E2101-1		80-20	1	L250
	22E2101-3		80	1	L250
	22E2101-4		80	1	L250
	22E2107-1	*	77-40	1	L253,
	22E2107-2	M		1	
	22E2107-3	M		AR	
	22E2107-4	*	77	1	L254
	22E2107-5	*	77	1	
	22E2110-1	A		1	J133
	22E2110-10	M		1	J133
	22E2110-11	M1		1	J133
	22E2110-12	M		1	J133
	22E2110-2	A		1	J133
	22E2110-3	A		1	J133
	22E2110-4	M		1	J133
	22E2110-5	M		1	J133
	22E2110-6	M		1	J133
	22E2110-7	M		1	J133
	22E2110-8	M		1	J133
	22E2110-9	M		1	J133
	22E2111-1	*		1	J134
	22E2113-1		77	2	E395
	22E2114-1		77	1	G336
	22E2160-1	M	77	1	E397
	22E2160-2	M	77	2	E397
	22E2160-3	M	77	1	E397
	22E2160-4		77	2	E397
	22E2166-1	P	77	1	E399
	22E3001-1		86	1	L266
	22E3003-1		86	1	L267,
	22E3003-5		86	1	L268
	22E3003-7		86	1	
	22E3004-1			1	L269, L270
	22E3005-1		86	1	J143
	22E3006-1		86	1	M001
	22E3006-4		86	4	M001
	22E3007-1		86	1	M002
	22E3007-2			1	M002
	22E3007-3			1	M002
	22E3007-5		86-2	2	M002
	22E3008-1		86	1	H512
	22E3008-2		86	1	H512
	22E3008-3	*	86	1	H512
	22E3008-5		86	1	H512
	22E3009-1		86	1	J144
	22E3010-1		86	1	J145
	22E3011-1		86	1	J146
	22E3011-2		86	1	J146
	22E3011-3		86	1	J146
	22E3011-4		86	1	J146
	22E3012-1		86	1	M003
	22E3012-2		86	1	M003
	22E3012-3		86	1	M003
	22E3012-6		86	1	M003
	22E3014-1			1	M004, M005
	22E3014-13		86	1	
	22E3014-23		86	1	
	22E3014-24		86	1	
	22E3015-1		86	1	M006
	22E3050-1		86-15	2	J147
	22E3050-6		86	1	J147
	22E3054-1		78-26	1	J149
	22E3054-2		78	1	J149
	22E3054-3		78	1	J149
	22E4001-10	A	87	1	M007
	22E4001-7	*	87	1	M007
	22E4001-8	*	87	1	M007
	22E4001-9	A	87	1	M007
	22E4002-1	*	85	1	J150
	22E4002-2	*	85	1	J150
	22E4003-1	*	85	1	M008
	22E4003-101		85	4	M008
1AGJ	22E4003-102	*	85	1	M008
	22E4003-103	*	85	1	M008
	22E4003-104	*	85	1	M008
	22E4003-108	A	85	1	M008
	22E4003-109	A	85	1	M008
	22E4003-110	A	85	1	M008
	22E4003-29	M1		2	M008
	22E4003-30	M		2	M008
	22E4003-44	M		1	M008
	22E4003-45		85	2	M008

AF Class Code or Stock No.	Part Number	Army Source Code	Figure and Index No.	Qty per Article	Micro-film Index
	22E4003-49	M	85	4	M008
	22E4003-5		85-33	2	M008
	22E4003-50	M	85	2	M008
	22E4003-51	M	85	2	M008
	22E4003-55	M		1	M008
	22E4003-59		85-30	1	M008
1AGJ	22E4003-73	*	85-29	1	M008
1AGJ	22E4003-74	M1	85-32	1	M008
1AGJ	22E4003-75	M	85-34	1	M008
	22E4003-93	M	85	2	M008
	22E4003-94	M	85	4	M008
	22E4003-9	M1	85	1	M008
	22E4004-1		74	1	J151
	22E4005-1			1	J152
	22E4005-2		74-1	1	J152
	22E4007-1		74-15	1	E402
	22E4008-1		85	1	
1AGJ	22E4008-2		85-44	1	
	22E4008-3		85-45	1	
	22E4008-35		85-47	1	
	22E4008-36		85-48	1	
	22E4008-4		85-46	1	
1AGJ	22E4008-45		85-43	1	
1AGJ	22E4008-46		85-37	1	
	22E4008-49	M		1	
1AGJ	22E4008-5		85-41	1	M009,
	22E4008-58	M		2	M010
	22E4008-59	M		2	
	22E4008-6		85-40	1	
	22E4008-61	M		1	
	22E4008-66		85	1	
	22E4008-67		85	1	
	22E4008-7		85-39	1	
	22E4008-70		85	1	
	22E4008-79	M		2	
	22E4008-8		85-38	1	
	22E4010-2		74A	1	J154
	22E4010-3		74A	1	J154
	22E4010-4		74A	1	J154
	22E4011-1	*	74-7	1	M011
	22E4011-2	M	74	1	M011
	22E4011-3	M	74	1	M011
	22E4011-4	M	74	1	M011
	22E4015-23		74-17	1	M013
	22E4015-3	M	74	1	M013
	22E4017-1		74	2	
	22E4017-12		74	2	
	22E4017-13	M1		2	M014,
	22E4017-14	M1		2	M015
	22E4017-2	*	74-19	7	
	22E4018-1			1	J155
	22E4018-2			1	J155
	22E4018-3			1	J155
	22E4018-4			1	J155
	22E4020-10		89	1	M016
	22E4020-100		89	1	M016
1AGJ	22E4020-12	P	89-2	59	M016
1AGJ	22E4020-14	P	89	29	M016
	22E4020-19	M		1	M016
	22E4020-2		89-1	1	M016
	22E4020-20	M	89	2	M016
	22E4020-21		89	1	M016
	22E4020-22		89	1	M016
	22E4020-29		89	14	M016
	22E4020-3		89	1	M016
	22E4020-30R		89	13	M016
	22E4020-31R		89	20	M016
	22E4020-6		89-4	1	M016
	22E4020-7		89	1	M016
	22E4020-8		89	1	M016
	22E4020-9		89-3	1	M016
	22E4021-1		85	1	
	22E4021-11	M	85	1	U58,
	22E4021-12	M1		1	T277
	22E4021-13	M1		1	
	22E4021-16	M		1	
	22E4021-17	M1		1	
	22E4021-18			1	
	22E4021-19	M	85-28	1	
	22E4021-2	M	85	1	
	22E4021-20	*	85	1	
	22E4021-21	M	85	1	
	22E4021-22	A	85	1	
	22E4021-23	A	85	1	U58,
	22E4021-3	A	85-20	1	T277
	22E4021-36		85	1	
	22E4021-39		85	1	
1AGJ	22E4021-4	A	85	1	
	22E4021-40		85	1	
	22E4021-42		85	1	
	22E4021-5	M1	85-10	1	
	22E4021-6	M1	85-12	1	
	22E4021-7	M1	85-8	1	
1AGJ	22E4021-9	P	85	1	
	22E4022-1	*	85	1	M017
	22E4022-10	M		2	M017
	22E4022-11	M		1	M017
	22E4022-12	M		1	M017
1AGJ	22E4022-2	A	85-49	1	M017
	22E4023-1	*		1	J156
	22E4023-5	M		1	J156
	22E4029-102		80	1	
	22E4029-105		80-18	1	
	22E4029-106		80	1	U216,
	22E4029-2		80-16	1	U217
	22E4029-200		80-14	1	
	22E4029-3		80-17	1	
	22E4030-2		89	1	M018
	22E4030-3		89	1	M018
	22E4031-1			8	J157
	22E4040-33	M1	87-9	4	M020
	22E4040-35	M1	87-13	4	M020
1AGJ	22E4042-1	*	87-39	4	G340
1AGJ	22E4042-2	X1		4	G340
	22E4042-3	X1		4	G340
	22E4042-4		87	2	G340
	22E4043-1		87	2	T166
1AGJ	22E4044-1		85	1	
1AGJ	22E4044-10	P	85	1	
	22E4044-2	X1		1	T278,
	22E4044-4	*	85	1	T279
	22E4044-5	X1		1	
1AGJ	22E4044-6	X1		1	
1AGJ	22E4044-9	P	85	1	
1AGJ	22E4045-1	P1	87-32	8	
	22E4045-2	X1	87	8	T280,
1AGJ	22E4045-3	X1	87	8	U59
1AGJ	22E4046-1	P1	87-28	2	U60
1AGJ	22E4046-2	P1	87-29	2	U60
	22E4046-3	X1		4	U60
	22E4046-4	X1		4	U60
1AGJ	22E4047-1	P1	87-40	4	M022,
	22E4047-2	X1	87	4	M023
1AGJ	22E4050-1	*	87-68	2	M024
1AGJ	22E4050-2	P	87-69	2	M024
	22E4051-10	M1	87-26	4	J159
	22E4051-12	*	87	1	J159
	22E4051-13	M1	87	2	J159
	22E4051-3	M1	87-52	2	J159
1AGJ	22E4051-6	M	87-42	16	J159
	22E4051-7	M1	87	2	J159
1AGJ	22E4054-1		85	1	U61
1AGJ	22E4054-16	P		1	U61
	22E4054-17	X1		1	U61
	22E4054-19	X1		1	U61
	22E4054-2	X1		1	U61
1AGJ	22E4054-22	P1	85	1	U61
	22E4054-30		85	1	U61
	22E4054-4	P		1	U61
	22E4055-1		85-24	1	U62

AF Class Code or Stock No.	Part Number	Army Source Code	Figure and Index No.	Qty per Article	Micro-film Index
1AGJ	22E4055-2	X1		1	U62
1AGJ	22E4055-3	X1		2	U62
	22E4055-4	X1		1	U62
	22E4058-1		85	1	G341
	22E4058-2		85	1	G341
	22E4059-1	X1	85	1	
	22E4059-12	M		1	
	22E4059-13	M		1	
	22E4059-15	M	85	1	
	22E4059-16	M	85	1	
	22E4059-17	M		1	
	22E4059-18	M		1	
	22E4059-19	M		1	
	22E4059-2	*	85	1	
	22E4059-20	M		1	
	22E4059-21	M		1	M029,
	22E4059-22	M		1	J160
	22E4059-25	M		1	
	22E4059-27		85-4	1	
	22E4059-3	M	85-6	1	
	22E4059-4	M	85-5	1	
	22E4059-41		85	1	
	22E4059-42		85	1	
	22E4059-46		85	1	
	22E4059-47		85	14	
	22E4059-50		85	1	
	22E4059-6	X1	85-3	1	
	22E4061-1	P	85	2	G342
	22E4061-2	P	85	1	G342
	22E4061-3	P	85	3	G342
	22E4063-1	M	76-4	2	J161
	22E4063-3	M	76	1	J161
	22E4064-1	A	76-3	1	J162,
	22E4064-2		76	1	J163
	22E4065-1	M1		1	G343
	22E4066-1	M1		1	G344
	22E4067-1	M	76-1	2	E403
	22E4067-2		76	2	E403
	22E4071-1	M		1	D331
	22E4073-1	*	74	1	
	22E4073-2	*	74	1	M030,
	22E4073-6	M1		1	J164
	22E4073-7	M1		1	
1AGJ	22E4074-1	P	85	1	E405
	22E4081-1			1	J165
	22E4083-3	M1		2	G345
	22E4084-1	*		1	M031
1AGJ	22E4084-2	*		1	M031
1AGJ	22E4084-3	*		1	M031
1AGJ	22E4084-4	*		2	M031
	22E4086-1	A	87	1	M033
	22E4086-2	A	87	1	M033
	22E4086-3	M	87-11	4	M033
	22E4086-4	M	87-15	4	M033
	22E4086-5		87	4	M033
1AGJ	22E4087-1	P1	87-23	2	M034
1AGJ	22E4087-2	P	87-24	2	M034
1AGJ	22E4087-4	P1	87-25	2	M034
	22E4087-5	X1		1	M034
1AGJ	22E4089-1	M1		3	E406
	22E4100-1	A1	87	2	J168
	22E4100-2	M1	87-60	2	J168
1AGJ	22E4152-1		87	1	X370
1AGJ	22E4152-2		87	1	X370
1AGJ	22E4152-3	P1	87-56	2	X370
1AGJ	22E4152-4	P1	87-57	2	X370
1AGJ	22E4153-1	P	87-12	4	G348
1AGJ	22E4156-1	P	87-55	24	D333
	22E4157-1	M1	87-22	2	M038
	22E4157-11		87-20	2	M038
	22E4157-12		87-21	2	M038
	22E4157-15	M1	87	2	M038
	22E4157-16	M1	87	2	M038
	22E4157-17	M1		2	M038
	22E4157-18	M1		1	M038
	22E4157-19	M1		2	M038
	22E4157-3	M1	87-61	2	M038
	22E4157-5	M1		4	M038
	22E4157-6	M1		2	M038
	22E4157-7	M1		2	M038
	22E4157-8	M1		2	M038
	22E4157-9	M1		8	M038
1AGJ	22E4158-1	P1	87-34	2	T281
1AGJ	22E4158-2	P1	87-35	2	T281
	22E4158-3	X1	87	2	T281
	22E4158-4	X1	87	2	T281
	22E4159-1	X1		4	J169
	22E4159-6	X1		4	J169
	22E4159-9	X1		4	J169
	22E4160-1		74	1	M039
	22E4164-1		74A	1	J170
	22E4164-2		74A-55	1	J170
	22E4166-1	*		1	M040
	22E4167-1	*		1	M041
	22E4168-1		74A	1	M042
	22E4168-10		74A-2	1	M042
	22E4168-2		74A	1	M042
	22E4168-4			1	M042
	22E4168-9		74A-1	1	M042
	22E4169-1	*	74A, 74B	1	M043
	22E4169-10		74B	1	M043
	22E4169-11		74B	1	M043
1AGJ	22E4169-2	P	74A-3, 74B-46	1	M043
1AGJ	22E4169-3	P	74A-4, 74B-47	1	M043
1AGJ	22E4169-4	P	74A-5, 74B-48	1	M043
	22E4169-9		74B	1	M043
	22E4170-1		74A	1	
	22E4170-10		74A-38	1	
	22E4170-102		74A-30	1	
	22E4170-104		74A-31	1	
	22E4170-106		74A-32	1	
	22E4170-11		74A-22	1	
	22E4170-12		74A-43	1	
	22E4170-13		74A-12	1	
	22E4170-138		74A-37	1	
	22E4170-139		74A-39	1	
	22E4170-14		74A-45	1	
	22E4170-140		74A-46	1	
	22E4170-141		74A-48	1	
	22E4170-142		74A-50	1	
	22E4170-143		74A-27	1	
	22E4170-144		74A-23	1	
	22E4170-145		74A-17	1	
	22E4170-146		74A-11	1	
	22E4170-147		74A-9	1	M044,
	22E4170-148		74A-19	1	M045,
	22E4170-15		74A-16	1	M046,
	22E4170-16		74A-47	1	M047,
	22E4170-17		74A-10	1	M048
	22E4170-18		74A-49	1	
	22E4170-19		74A-8	1	
	22E4170-2		74A	1	
	22E4170-20		74A-44	1	
	22E4170-201		74A	1	
	22E4170-202		74A-24	1	
	22E4170-203		74A-14	1	
	22E4170-204		74A-41	1	
	22E4170-205		74A	1	
	22E4170-206		74A	1	
	22E4170-207		74A	1	
	22E4170-208		74A	1	
	22E4170-209		74A	1	
	22E4170-210		74A	1	
	22E4170-211		74A	1	

AF Class Code or Stock No.	Part Number	Army Source Code	Figure and Index No.	Qty per Article	Micro-film Index
	22E4170-212		74A	1	
	22E4170-213		74A	1	
	22E4170-214		74A	1	
	22E4170-215		74A	1	
	22E4170-216		74A	1	
	22E4170-217		74A	1	
	22E4170-218		74A	1	
	22E4170-22		74A-34	1	
	22E4170-220		74A-20	1	M044,
	22E4170-226		74A-21	1	M045,
	22E4170-228		74A-42	1	M046,
	22E4170-229		74A-33	1	M047,
	22E4170-243		74A-15	1	M048
	22E4170-244		74A-25	1	
	22E4170-245		74A-35	1	
	22E4170-27		74A-28	1	
	22E4170-272		74A-29	1	
	22E4170-29		74A-18	1	
	22E4170-7		74A-13	1	
	22E4170-8		74A-36	1	
	22E4170-9		74A-26	1	
	22E4172-3			1	M049
	22E4172-6			1	M049
	22E4173-1			3	M050
	22E4173-2			4	M050
	22E4177-1	P	87	12	E407
	22E4178-1		74	1	
	22E4178-10		74B	1	
	22E4178-11		74B	1	
	22E4178-2		74A-54	1	J171,
	22E4178-6		74	1	J172
	22E4178-7		74A	1	
	22E4178-8		74B	1	
	22E4178-9		74B-44	1	
	22E4179-1		87-44	2	J173
	22E4179-3		87-51	2	J173
	22E4179-4		87-46	4	J173
	22E4179-5		87-48	2	J173
	22E4179-6		87	2	J173
1AGJ	22E4180-19	X1		1	U64, U65, U66, U67
	22E4181-1		74A	1	M055
	22E4181-10		74A	1	M055
	22E4181-11		74A	1	M055
	22E4181-12		74A	1	M055
	22E4181-14		74A	1	M055
	22E4181-2		74A-51	1	M055
	22E4181-3		74A-52	1	M055
	22E4181-6		74A-56	1	M055
	22E4182-10	X1		1	
	22E4182-11	*		1	
	22E4182-12	X1		1	
	22E4182-13	X1		8	
	22E4182-14	X1		6	
1AGJ	22E4182-2	*		1	
	22E4182-21	X1		22	
	22E4182-22	X1		2	
	22E4182-23	X1	85	2	
	22E4182-24	X1		2	M056,
	22E4182-26	M1		1	M057,
	22E4182-27	X1		1	M058
	22E4182-28	X1		1	
	22E4182-29	X1		1	
1AGJ	22E4182-3	*		1	
	22E4182-30	X1		1	
	22E4182-31	X1		1	
	22E4182-34	X1		1	
	22E4182-35	X1	85	2	
	22E4182-36	X1		1	
1AGJ	22E4182-4	*		1	

AF Class Code or Stock No.	Part Number	Army Source Code	Figure and Index No.	Qty per Article	Micro-film Index
	22E4182-5	X1	85	1	
	22E4182-6	X1		1	M056,
	22E4182-7	X1		1	M057,
	22E4182-8	X1		1	M058
	22E4182-9	X1		1	
	22E4193-1	*	85	1	M059
	22E4193-10	X2		1	M059
	22E4193-3	X2		1	M059
	22E4193-4	X2		1	M059
	22E4193-5	X2		1	M059
	22E4193-6	X2		1	M059
	22E4193-7	X2		1	M059
	22E4193-8	X2		1	M059
	22E4193-9	X2		1	M059
	22E4195-1	*	87	2	G353
	22E4195-3	*	87	1	G353
	22E4196-1		85	1	D334
	22E4197-1	*		1	J174
	22E4197-2	A		1	J174
	22E4197-3	A	87	2	J174
	22E4197-4	P	87	2	J174
	22E4197-5	M1	87	4	J174
	22E4197-6	M1	87	2	J174
	22E4197-7	M1	87	2	J174
	22E4198-1	*	74	1	J175
	22E4198-2	*	74	1	J175
1AGJ	22E4202-2	P	87	4	G354
	22E4202-4		87-38	4	G354
	22E4204-2		87	2	G356
	22E4205-2		87	2	G357
	22E4209-1		76	1	D282
	22E5094-1		88	1	J186
	22E5095-1		88	1	M072
1AGJ	22E5096-1		88	1	J187
	22E5096-13		88-49	2	J187
	22E5096-14		88-46	1	J187
	22E5096-19		88-38	1	J187
	22E5096-2		88-53	1	J187
	22E5096-20		88-39	1	J187
	22E5096-3		88-43	1	J187
	22E5097-1		88-29	2	G361
	22E5097-2		88-32	2	G361
	22E5098-2		88-27	2	E409
	22E5120-1		88-22	2	J194
	22E5120-5		88-25	1	J194
1AGJ	22E5121-1		88-24	1	D336
	22E5123-1		88-19	2	E411
	22E5124-1		88	1	J195
	22E5124-2		88-18	1	J195
	22E5124-3		88-20	1	J195
	22E5125-1		88-31	2	G366
	22E5125-3	M1	88	2	G366
	22E5126-1		88-2	1	J196
	22E5126-2		88-7	1	J196
	22E5126-3		88-5	1	J196
	22E5126-4		88-15	1	J196
	22E5126-5		88-13	1	J196
	22E5126-6		88-10	1	J196
	22E5134-1		88	1	M076
	22E5136-1		88	1	M077
	22E5136-2		88-21	1	M077
	22E5137-1		88-23	1	J201
	22E5138-1		88	1	D337
	22E5140-1		88-17	1	E415
	22E5142-1		88	4	E416,
1AGJ	22E5142-2	P	88	4	E417
	22E6001-1		90	1	M109
	22E6001-2		90-2	1	M109
	22E6001-3		90	1	M109
	22E6001-4	M1	90	1	M109
1AGJ	22E6010-1	*	90	1	J258
1AGJ	22E6010-10	*	90-6	1	J258
	22E6010-20	P	90	1	J258

AF Class Code or Stock No.	Part Number	Army Source Code	Figure and Index No.	Qty per Article	Micro-film Index
	22E6010-21	*	90	1	J258
	22E6010-22	A	90	1	J258
1AGJ	22E6010-4	P1	90-7	1	J258
1AGJ	22E6010-5	P		1	J258
	22E6010-6	M1		1	J258
1AGJ	22E6010-7	M		1	J258
1AGJ	22E6010-8	M		1	J258
	22E6020-1		91	1	
	22E6020-11	M		1	
	22E6020-12	M		1	
	22E6020-14	M		1	
	22E6020-15	M		1	
	22E6020-16	M		1	
	22E6020-17	M		1	
	22E6020-18	*	91	1	
	22E6020-19	M	91	1	U233,
	22E6020-2	M	91	2	T482
	22E6020-20	M	91	1	
	22E6020-22	*	91	1	
	22E6020-3	M	91	1	
	22E6020-4	M	91-11	1	
	22E6020-6	M	91-9	1	
	22E6020-7	M	91-7	1	
	22E6020-8	M		1	
	22E6020-9	M	91-10	1	
1AGJ	22E6030-1	*	90	1	M110
1AGJ	22E6030-11		90	1	M110
	22E6030-17	X1		1	M110
	22E6030-28	M		1	M110
	22E6030-33	*	90	1	M110
	22E6030-34		90-1	1	M110
	22E6030-39	*	90	1	M110
	22E6032-1		90	1	J259
1AGJ	22E6032-3	P	90	2	J259
1AGJ	22E6032-4	P	90	1	J259
1AGJ	22E6032-5	P	90	1	J259
	22E6035-1		90	1	M111
	22E6035-3	A		1	M111
	22E6035-4	A		1	M111
	22E6035-5			1	M111
	22E6035-7		90	1	M111
	22E6035-8	*	90	1	M111
	22E6036-1	*	90-9	1	M111
	22E6036-2	A1	90-10	1	M111
	22E6036-3	M		1	M111
1AGJ	22E6036-5	M1	90-12	1	M111
	22E6037-1	M1	90	1	E436
1AGJ	22E6038-1	M1	90	1	E437
1AGJ	22E6039-1	P		1	E438
	22E6040-1		90-2	1	E439
1AGJ	22E6040-2	P		1	E439
1AGJ	22E6041-1	X1		1	G406
1AGJ	22E6042-1	X1		1	J260
1AGJ	22E6043-1	P		2	E440
1AGJ	22E6047-1	*		1	D343
1AGJ	22E6048-1	P		1	D344
	22E6050-1		90	1	U74
	22E6050-10	M1		1	U74
	22E6050-11	M1		1	U74
	22E6050-12	X1		1	U74
	22E6050-13	M1		1	U74
	22E6050-14	M1		1	U74
	22E6050-16	M		1	U74
1AGJ	22E6050-2	A	90-8	1	U74
	22E6050-3	P		1	U74
	22E6050-4	M1		1	U74
	22E6050-5	M1		1	U74
1AGJ	22E6050-6	P	90	1	U74
	22E6050-7	M1		1	U74
	22E6050-8	M1		1	U74
	22E6050-9	X1		1	U74
	22E6052-1	X1		1	G407
	22E6052-2	M		1	G407
	22E6052-3	M		3	G407
	22E6052-5	X1		1	G407
1AGJ	22E6052-6	P1	90	1	G407
1AGJ	22E6054-1	P1		1	J262
	22E6054-2	X1		1	J262
1AGJ	22E6054-3	P		1	J262
1AGJ	22E6055-1	P		1	E441
	22E6057-1	X1	90	1	J263
1AGJ	22E6057-2	P	90	1	J263
	22E6057-3	X1		1	J263
	22E6057-5	M1	90-5	1	J263
	22E6059-1	A		1	U75
	22E6059-2	M1		1	U75
	22E6059-3	M1		1	U75
	22E6059-4	M1		1	U75
	22E6059-5	M1		1	U75
	22E6059-6	M1		1	U75
	22E6059-7	M1		2	U75
	22E6059-8	M1		1	U75
	22E6060-1			1	M116
	22E6060-2		91-41	1	M116
	22E6060-3	A	91-40	1	M116
	22E6060-7		91-42	1	M116
1AGJ	22E6061-1	X2	90	1	
	22E6061-10	X1		1	
	22E6061-11	M1		1	
1AGJ	22E6061-12	P1		1	
	22E6061-13	X1		1	
	22E6061-14	X1		1	
	22E6061-15	M		1	
	22E6061-18	X1		1	
	22E6061-19	X1		1	
	22E6061-2	X2		1	
	22E6061-20	X1		1	
	22E6061-21	X2		1	
	22E6061-22	X2		1	
	22E6061-23	X1		1	
	22E6061-24	X1		1	
	22E6061-3	X2		1	
	22E6061-4	X2		1	
	22E6061-5	X2		1	
	22E6061-6	X2		1	
	22E6061-7	X1		1	
	22E6061-8	X1		1	
	22E6061-9	X1		1	
1AGJ	22E6062-1	P		1	D345
	22E6063-1	M		1	E442
	22E6066-1	X2		1	G408
	22E6066-2	X1		1	G408
	22E6067-1	X1		1	G409
	22E6067-2	X1		1	G409
1AGJ	22E6072-1	M	90	1	
	22E7001-1			1	
	22E7001-10		92-40	1	
	22E7001-107		91-35	1	
	22E7001-109		92-32	1	
	22E7001-11		92-41	1	
	22E7001-12		91-18	1	
	22E7001-14			1	
	22E7001-16	M	92-33	1	
	22E7001-17		91-4	1	
	22E7001-18		91-5	1	M117,
	22E7001-2	M		1	M118,
	22E7001-20		92-16	1	J266
	22E7001-21		92-34	1	
	22E7001-22	M		1	
	22E7001-23	M		1	
	22E7001-4			1	
	22E7001-5	M		1	
	22E7001-52	M		1	
	22E7001-53	M		1	
	22E7001-58		92-17	1	
	22E7001-6	M	92-15	1	

AF Class Code or Stock No.	Part Number	Army Source Code	Figure and Index No.	Qty per Article	Micro-film Index
	22E7001-62		91-2	1	
	22E7001-63		91-3	1	
	22E7001-65			1	
	22E7001-67			1	
	22E7001-7	M		1	
	22E7001-74		92-31	1	
	22E7001-75		91-19	1	
	22E7001-76			1	
	22E7001-8			1	
	22E7001-80		91	1	
	22E7001-81		91-27	1	M117,
	22E7001-82		91-25	1	M118,
	22E7001-83		92-10	1	J266
	22E7001-84		92-12	1	
	22E7001-85		92-11	1	
	22E7001-86		92-8	1	
	22E7001-87		92-14	1	
	22E7001-88		92-9	1	
	22E7001-89		92-11A	1	
	22E7001-9		92-39	1	
	22E7001-90		92-9A	1	
	22E7001-91		92-7A	1	
	22E7001-92		91-32	1	
	22E7001-93		91-31	1	
	22E7002-1			1	
	22E7002-10	M		1	
	22E7002-2	*	91	1	
	22E7002-21	M	91-20	1	
	22E7002-23		91-18	1	
	22E7002-25		91	1	
	22E7002-26		91	1	M119,
	22E7002-3	M	92-6,	1	J267,
			93-6		J268
	22E7002-4	M	92-7,	1	
			93-7		
	22E7002-5	M	92-4,	1	
			93-4		
	22E7002-8	M	91-13	1	
	22E7002-9	M	91-14	1	
	22E7003-1		92	2	M120
	22E7005-1		92	2	
	22E7005-12	M		1	
	22E7005-13	M		1	
	22E7005-15	M		1	
	22E7005-17	M		1	
	22E7005-18	M		1	
	22E7005-19	M		1	
	22E7005-2	M	92-45,	1	
	22E7005-20		93-58	1	
	22E7005-21	M		1	
	22E7005-23	M	92-49,	1	M121,
			93-62		M122,
	22E7005-25	M	93-61	1	J269
	22E7005-3	M	92-44,	1	
			93-57		
	22E7005-4		92-46	1	
	22E7005-5	M		1	
	22E7005-6		92-48	1	
	22E7005-7	M	92-51,	1	
			93-64		
	22E7005-8	M	92-52,	1	
			93-65		
	22E7005-9	M	93-59	1	
	22E7007-1		91	1	M123
	22E7010-1		94	1	
	22E7010-10	M	94-17	3	
	22E7010-101		94	1	M124,
	22E7010-107		94	1	M125,
	22E7010-108		94	1	J271,
	22E7010-109		94	1	J272
	22E7010-11		94-18	1	
	22E7010-110		94	1	
	22E7010-12		94-15	1	
	22E7010-13		94-16	1	
	22E7010-14		94-13	1	
	22E7010-15		94-14	1	
	22E7010-16		94-11	1	
	22E7010-17		94-12	1	
	22E7010-18	M	94-7	1	
	22E7010-19	M	94-8	1	
	22E7010-20	M	94-4	1	
	22E7010-44		94	1	
	22E7010-45		94	1	
	22E7010-46	*	94	1	
	22E7010-47	M	94-5	1	
	22E7010-49	M	94-6	1	
	22E7010-51		94	1	
	22E7010-52		94-25	1	
	22E7010-53		94-26	1	
	22E7010-56		94-23	1	M124,
	22E7010-57		94-24	1	M125,
	22E7010-58		94-21	1	J271,
	22E7010-59		94-22	1	J272
	22E7010-64		94	1	
	22E7010-65		94	1	
	22E7010-70	M	94-38	1	
	22E7010-71	M	94-39	1	
	22E7010-72	M	94-37	1	
	22E7010-73	M	94-36	1	
	22E7010-74	M	94-29	1	
	22E7010-75	M	94-34	1	
	22E7010-76	M		2	
	22E7010-77	M	94-33	1	
	22E7010-78	M	94-41	2	
	22E7010-8		94-19	1	
	22E7010-89	M	94-31	2	
	22E7010-9		94-20	1	
	22E7010-90	M	94-32	1	
	22E7010-91	M	94-28	1	
	22E7010-93	M	94-30	1	
	22E7010-97	M		1	
	22E7010-98	M	94-40	1	
	22E7010-99	M	94-42	1	
	22E7012-1	*	93-25	1	J273,
	22E7012-4	P	93	1	J274
	22E7013-1	M1	93-24	1	J275
	22E7041-1		92	1	E443
	22E7042-1	M		1	E444
	22E7043-1	M1		1	G412
	22E7044-1		92	1	E445
	22E7046-1	M		1	G413
	22E7046-2	M		1	G413
	22E7046-3	M		1	G413
	22E7046-4	M		1	G413
	22E7046-5	M		1	G413
	22E7046-6	M		1	G413
	22E7049-1		94	2	G414
	22E7049-2		94	1	G414
	22E7051-1	*		1	M126
	22E7051-10		91	1	M126
	22E7051-2	M1		1	M126
	22E7051-3	M1		1	M126
	22E7051-4	M1		1	M126
	22E7051-5	M1		1	M126
	22E7051-6	M1		1	M126
	22E7051-7	M1		1	M126
	22E7051-8	X2	91	1	M126
	22E7052-1	*		1	J276, J277
1AGJ	22E7053-1	P		1	E446
1AGJ	22E7053-2	P		1	E446
	22E7058-1	M		1	E449
	22E7059-1	M1		1	E450
	22E7059-2	M1		1	E450
1AGJ	22E7060-1	P		2	E451
	22E7061-1	M1	92-22	2	J278

AF Class Code or Stock No.	Part Number	Army Source Code	Figure and Index No.	Qty per Article	Micro-film Index
	22E7062-1	M1	92-23	1	J279
	22E7062-2	M1		1	J279
	22E7062-3	M1		1	J279
	22E7063-10		92	10	M127
	22E7063-11	*	93-32	1	M127
	22E7063-12	M		1	M127
	22E7063-13	M		1	M127
	22E7063-14	M		1	M127
	22E7063-15	M		1	M127
	22E7063-16	M		1	M127
	22E7063-17	M		1	M127
	22E7063-18	M		1	M127
	22E7063-19	*		1	M127
	22E7063-2		92-29	1	M127
	22E7063-20	M	93	15	M127
	22E7063-23	M1	93	1	M127
	22E7064-1	M1	92-28, 93-31	1	G415
	22E7065-1	M1	92	1	J280
	22E7065-3		93A	1	J280
	22E7065-9	M1		1	J280
1AGJ	22E7066-1	P	92	1	E452
	22E7067-1			1	M128
	22E7067-2			1	M128
	22E7067-3			1	M128
	22E7067-4		93	1	M128
1AGJ	22E7067-5	P		1	M128
	22E7067-6		92	1	M128
	22E7067-7		92	1	M128
1AGJ	22E7068-1	P		1	E452
1AGJ	22E7069-1	P	92,93	1	E454
	22E7070-1		92-21	1	E455
	22E7070-2	M	93	1	E455
	22E7070-3		93A	1	E455
1AGJ	22E7071-2	P	92	1	E456
	22E7071-3	A	92	1	E456
1AGJ	22E7072-1	P	93-33	1	E457
1AGJ	22E7072-2	P	93-34	1	E457
	22E7073-1	X2	93-26	1	G416
	22E7956-1	M1		1	
	22E8001-1	*	74	1	G417
	22E8002-1	*	39	1	M130
	22E8002-10	M	39-5	1	M130
	22E8002-11	M	39-4	6	M130
	22E8002-12		39	1	M130
	22E8002-13		39	1	M130
	22E8002-14		39	1	M130
	22E8002-2	*	39	1	M130
	22E8002-3	M	39-1	1	M130
	22E8002-4	M	39	4	M130
	22E8002-5	M	39	4	M130
	22E8002-9	M	39	1	M130
	22L0001-2		23	1	N069
	22L0002-1		23	1	N070
	22L0002-2		23	1	N070
	22L0002-3		23	1	N070
	22L0002-4		23	1	N070
	22L0002-5		23	1	N070
	22L0002-6		23	1	N070
	22L0002-7		23	1	N070
	22L0002-8		23	1	N070
	22L0020-1		25	1	N076
	22L0020-2		25	1	N076
1AGJ	22L1003-1		23-7	1	N078
	22L1003-10		23-8	1	N078
	22L1003-11		23-9	1	N078
	22L1003-19		23	1	N078
1AGJ	22L1003-2		23	1	N078
	22L1003-20		23	1	N078
	22L1004-1		23	1	
	22L1004-2		23	1	N079,
	22L1004-3		23-24	1	J522
	22L1004-4		23	1	

AF Class Code or Stock No.	Part Number	Army Source Code	Figure and Index No.	Qty per Article	Micro-film Index
	22L1015-1		24-52	1	
1AGJ	22L1055-1		23-15	2	G500
	22L1055-2		23	2	G500
1AGJ	22L1058-1		23-20, 25-5	2	G501
	22L1058-2		23	1	G501
	22L1058-5		23	1	G501
1AGJ	22L1060-1		23-29, 25-16	3	G502
1AGJ	22L1061-1		23-33	1	G503
1AGJ	22L1061-2		23	1	G503
1AGJ	22L1062-1		23-32, 25-19	3	F013
1AGJ	22L1063-1		23-18	1	F014
	22L1064-1		23-30, 25-17	3	G504
1AGJ	22L1064-2		23-31, 25-18	3	G504
1AGJ	22L1064-3		23-39, 25-22	3	G504
1AGJ	22L1065-1		23-41, 25-24	3	F015
1AGJ	22L1069-1		23-34	1	F018
1AGJ	22L1070-1		23-10	2	F019
1AGJ	22L1070-2		23-11	2	F019
	22L1071-1		24-3	1	F020
	22L1071-2		24	1	F020
1AGJ	22L1071-5		23-3	1	F020
1AGJ	22L1071-6		23	1	F020
1AGJ	22L2003-1		25-3	1	N081
	22L2060-1		25-20	1	F022
	22L2064-1		26-37	1	J529
	22L3075-1		26A	6	F033
	22L3076-1		26A-50	6	F034
	22L3077-1		26A-49	6	F035
	22L3078-1		26A	6	F036
	22L3079-1		26A	6	F037
	22L3300-1		26A	1	N108
	22L3300-2		26A	1	N108
	22L3301-1		26A	1	N109
	22L3301-2		26A	1	N109
	22L3302-1		26A-29	2	U129, U130
	22L3302-2		26C-29	1	
	22L3302-28		26A-26	6	
	22L3302-29		26A-27	8	
	22L3302-30		26A-28	4	
	22L3303-1		26A-25	2	N110
	22L3304-1		26C	1	N111
	22L3304-11		26C-1	1	N111
	22L3304-12		26A-1	2	N111
	22L3304-13		26A	3	N111
1AGJ	22L3304-14		26D	1	N111
1AGJ	22L3304-15		26B	2	N111
	22L3304-2		26A	2	N111
	22L3304-3		26A	3	N111
1AGJ	22L3304-5		26B	2	N111
	22L3306-1		26A	1	N112, K019
	22L3306-10		26C-18	1	
	22L3306-2		26A	1	
	22L3306-26		26A-18	2	
	22L3306-27		26C-19	1	
	22L3306-3		26C	1	
	22L3306-5		26A-20	3	
	22L3306-6		26A-21	3	
	22L3306-7		26A-16	2	
	22L3306-8		26A-17	2	
	22L3306-9		26C-17	1	
1AGJ	22L3310-1		26A	3	N113
1AGJ	22L3311-1		26A	6	G538
1AGJ	22L3311-3		26A	3	G538
	22L3311-4		26A	3	G538
	22L3312-1		26A	3	G539
	22L3312-2		26A-8	3	G539

AF Class Code or Stock No.	Part Number	Army Source Code	Figure and Index No.	Qty per Article	Micro-film Index
1AGJ	22L3313-1		26A	3	F095
1AGJ	22L3313-2		26A-9	3	F095
	22L3314-1		26C	1	K020
	22L3314-2		26A	2	K020
1AGJ	22L3314-4		26B	2	K020
	22L3314-5		26C	1	K020
	22L3314-6		26A	2	K020
1AGJ	22L3314-7		26D	1	K020
1AGJ	22L3314-8		26B	2	K020
	22L3315-1		26A-14	3	F096
	22L3316-1		26A	3	F097
	22L3316-2		26A-13	3	F097
	22L3317-1		26A-11	3	G540
	22L3318-1		26A-12	3	G541
	22L3319-1		26A	3	F098
	22L3320-1		26C-16	1	K021
	22L3320-2		26A-15	2	K021
	22L3320-3		26D	1	K021
	22L3320-4		26B-31	2	K021
	22L3321-1		26A	12	F099
	22L3321-2		26A	30	F099
1AGJ	22L3322-1		26A	3	K022
1AGJ	22L3322-2		26A-10	3	K022
	22L3323-1		26A	3	F100
	22L3323-2		26A	3	F100
	22L3324-1		26A	3	G542
	22L3324-2		26A	3	G542
	22L3325-1		26A	3	K023
	22L3326-1		26A-31	2	G543
	22L3327-1		26A-55	2	F101
	22L3327-2		26A	2	F101
	22L3328-1		26A-45	6	N114, N115
	22L3330-1		26A-44	6	K024
	22L3330-2		26A	6	K024
	22L3330-3		26A-43	6	K024
	22L3330-4		26A	6	K024
	22L3330-5		26A-33	12	K024
	22L3330-6		26A-34	6	K024
	22L3330-7		26A-36	6	K024
	22L3330-8		26A-37	6	K024
	22L3330-9		26A-32	6	K024
	22L3331-1		26A-35	6	D402
	22L3332-1		26A-46	6	G544
	22L3333-1		26A	3	F102
	22L3334-1		26A	3	D403
	22L3335-1		26A	3	D404
	22L3336-1		26A	3	G545
	22L3337-1		26A-54	2	F103
	22L3338-11		26A	1	F104
	22L3338-12		26A	1	F104
	22L3341-1		26A-30	3	G546
	22L3342-1		26A	3	K025
	22L3342-2		26C	1	K025
	22L3342-3		26A	2	K025
	22L3346-1		26A-53	3	F106
	22L3347-1		26A-51	3	F107
	22L3350-1		26C	1	N117
	22L3351-1		26C	1	N118
	22L3352-1		26C-26	1	N119
1AGJ	22L3352-2		26D-47	1	N119
	22L3352-7		26C	1	N119
	22L3353-1		26D-24A	1	F108
	22L3353-2		26B-28A	2	F108
	22L3356-1		26C-56	1	F109
	22L3356-2		26C	1	F109
	22L3357-1		26C-55	1	F110
	22L3357-2		26C	1	F110
	22L3358-1		26C-31	1	G548
	22L3359-1		26A	3	F111
	22L3400-1		26B	1	N120
	22L3400-2		26B	1	N120
	22L3401-1		26B	1	N121
	22L3401-2		26B	1	N121
	22L3401-3		26D	1	N121
1AGJ	22L3402-1		26B-12	1	
1AGJ	22L3402-2		26B	1	
	22L3402-26		26B-51	8	N122,
	22L3402-27		26B-50	4	N123
1AGJ	22L3402-3		26D-8	1	
	22L3402-36		26B	6	
1AGJ	22L3403-1		26B	1	N124
1AGJ	22L3403-2		26B	1	N124
	22L3404-1		26B	2	K027
	22L3406-1		26B	1	
	22L3406-2		26B	1	
	22L3406-3		26D	1	N125,
	22L3406-5		26B-44	3	N126
	22L3406-6		26B-45	3	
	22L3406-7		26B-41	3	
	22L3409-1		26D	1	N127
1AGJ	22L3410-1		26B	3	N128
	22L3411-1		26B	6	F112
1AGJ	22L3412-1		26B-1	6	F113
	22L3412-2		26B	4	F113
1AGJ	22L3413-1		26B	2	F114
1AGJ	22L3414-1		26B-8	2	G549
	22L3414-2		26D	2	G549
1AGJ	22L3415-1		26B	4	F115
	22L3416-1		24-19	1	F116
	22L3417-1		26D-5	1	G550
	22L3418-1		26B-13	2	C259
	22L3419-1		26D-9	1	K028
	22L3424-1		26B-9	1	H002
	22L3424-2		26B	1	H002
	22L3425-1		26B	3	K030
	22L3425-2		26B	3	K030
	22L3426-1		26D-4	1	F117
	22L3427-1		26D-2	1	F118
	22L3428-1		26B-6	2	F119
	22L3429-1		26B-3	2	F120
	22L3430-1		26B-20	6	T379
	22L3430-2		26B-15	6	T379
	22L3431-1		26B-7	2	F121
	22L4067-1		26A	6	H007
	22L4068-1		26A-48	6	F127
	22L4069-1		26A	12	D409
	22L4070-1		26A-47	6	F128
	22L4102-1		26A-23	6	N137
	22L4102-13		26A	6	N137
	22L4104-1		26A-24	6	
	22L4105-1		26C-57	1	N138
	22L4105-2		26A-56	4	N138
	22L4106-1		26B-47	6	N139
	22L4109-1		26A-57	3	F140
	22P0001-1		27	1	N156
	22P0001-2		27	1	N156
	22P0001-3		29	1	N156
	22P0003-1		27	1	
	22P0003-51		27	1	
	22P1001-1		28	1	N158
	22P1001-10		28	1	N158
	22P1004-1	*	28	1	
	22P1004-17	*	27	1	
	22P1004-18	M	28-16	1	
	22P1004-2	*	28	1	
	22P1004-20	*	28	1	
	22P1004-21	*	28	1	N159,
	22P1004-22	M1	28	1	K076
	22P1004-25	P	28-18	1	
	22P1004-3	*	28	1	
	22P1004-4	*	28	1	
	22P1004-5	M1	28-25	1	
	22P1004-6	M	28-26	1	
	22P1012-1	*	28-8	1	U135
	22P1012-2	*	28	1	U135
	22P1016-1	P	28	1	H021
	22P1016-2		28	1	H021

AF Class Code or Stock No.	Part Number	Army Source Code	Figure and Index No.	Qty per Article	Micro-film Index
	22P1020-1	M1	28	1	F145
	22P1021-1	*	28	1	K078
1AGJ	22P1041-1	P	38-19	1	F146
	22P1043-1	M	38-22	4	F147
	22P1049-1	M	28	4	D419
	22P1050-1	M1	28	1	K079
	22P1051-1	*	28	1	
	22P1051-16	*	28	1	
	22P1051-17	*	28	1	
	22P1051-19	*	28	1	
	22P1051-2	*	28	1	
	22P1051-20		28	1	
	22P1051-21		28	1	
	22P1051-22		28	1	
	22P1051-23		28	1	
	22P1051-28		28	1	
	22P1051-29		28	1	N163,
	22P1051-3	*	28	1	N164,
	22P1051-30	*	28	1	N165
	22P1051-32	M	28	1	
	22P1051-33	M	28	1	
	22P1051-34	M	28	1	
	22P1051-35		28	1	
	22P1051-36	*	28	1	
	22P1051-37	*	28	1	
	22P1051-40		28	1	
	22P1051-5	*	28	1	
	22P1051-8	*	28	1	
	22P1051-9	*	28	1	
	22P1052-2	*	38	1	N166
	22P1053-1	A	38	7	N167
	22P1053-2	A	38	1	N167
	22P1053-6		38	1	N167
1AGJ	22P1053-7	P	38-20	8	N167
	22P1054-1		38	1	H024
	22P1054-2	P1	38-21	1	H024
	22P1055-1		38	7	K080
	22P1055-2	P1	38	7	K080
	22P1056-1		28	1	H025
1AGJ	22P1057-1	P1	27-4	1	H026
	22P1060-2	P1	28	1	F150
	22P1060-3	P1	28	1	F150
	22P1061-1	P1	28	1	F151
	22P3001-1	*	27,29	1	U136
	22P3001-10	M	29-13	1	U136
1AGJ	22P3001-11		29-19	1	U136
	22P3001-12	A	29	1	U136
	22P3001-13	A	29	1	U136
	22P3001-14		29-20	1	U136
	22P3001-15		29	1	U136
	22P3001-16		29-25	1	U136
	22P3001-17		29	1	U136
	22P3001-2		29	1	U136
	22P3001-4		29	1	U136
	22P3001-6		29	1	U136
	22P3001-8	M	29-2	1	U136
1AGJ	22P3003-126		30-25	1	N170,
1AGJ	22P3003-151		30	1	N171,
	22P3003-250		29,30	1	N172, N173
	22P3005-2		30	1	
	22P3005-74		30	1	
	22P3005-75		30	1	
	22P3011-1		30-5	1	H028
	22P3011-2		24	1	H028
	22P3012-1	*	29	1	
	22P3012-10	*	29	1	
	22P3012-11	M	29	1	N174,
	22P3012-12	M	29	1	N175
4849	22P3012-13	M	29	1	
	22P3012-5	*	29	1	
	22P3012-6	M	29	1	
	22P3030-1	*	29	1	N176

AF Class Code or Stock No.	Part Number	Army Source Code	Figure and Index No.	Qty per Article	Micro-film Index
	22P3031-1		29-4	1	N177
1AGJ	22P3031-30	P1	29	1	N177
	22P3031-31	X1		1	N177
1AGJ	22P3043-1	A	33-3	4	H030
1AGJ	22P3043-2	P1	33	4	H030
1AGJ	22P3045-1	P	29-8	1	F155
	22P3046-1	X2		1	K082
	22P3047-3	M	33-35	1	K083
	22P3047-4	M	33-36	2	K083
	22P3047-5	M	33-37	2	K083
1AGJ	22P3063-1	P	29-29	1	H032
	22P3070-1		30-1	1	K087
	22P3072-1	X1		1	N179,
	22P3072-2	*		1	N180
1AGJ	22P3073-1	P	33-33	1	N181,
	22P3073-2	*	33	1	K088
	22P3074-1	M1		1	K089
	22P3074-2	M1		1	K089
	22P3074-3	M		1	K089
1AGJ	22P3075-50	*	33	1	U137,
1AGJ	22P3075-51	*	33	1	U138,
1AGJ	22P3075-56	*	33	1	U139
	22P3081-1		30	1	K092
1AGJ	22P3083-1	P	35	1	F160
1AGJ	22P3087-1		30	1	F162
	22P3099-1		30-11	2	H034
	22P3100-1		30-12	1	H035
1AGJ	22P3501-1	P1	29-9	4	H036
1AGJ	22P3501-2	P1	29-10	4	H036
1AGJ	22P3501-3	P	29	1	H036
	22P4001-1	*	32	1	
	22P4001-11		32	1	N186,
	22P4001-12		32-13G	1	N187
	22P4001-3		32	1	
	22P4001-5	M	32-6A	1	
	22P4002-1	*	32	1	N188
	22P4002-2	*	32	1	N188
	22P4003-1	*	27-10	1	
	22P4003-101	*	27	1	
1AGJ	22P4003-103	*	27	1	
1AGJ	22P4003-104	P2	27	1	
1AGJ	22P4003-105	P2	27	1	
	22P4003-107		27	1	
	22P4003-109		27	1	
	22P4003-19	M		1	
	22P4003-20	M		1	N189,
	22P4003-21	M1	27	1	N190
	22P4003-22	M1	27	1	
1AGJ	22P4003-3	P	27	1	
1AGJ	22P4003-31	P2	27	1	
1AGJ	22P4003-32	P2	27	1	
1AGJ	22P4003-5	P	27	1	
1AGJ	22P4003-7	P	27	1	
1AGJ	22P4003-9	P	27	1	
1AGJ	22P4021-1	*	27-8, 31	1	
	22P4021-10	M1		1	
	22P4021-11	M	32	1	
	22P4021-13		32	1	
	22P4021-14		32-51	1	
	22P4021-15		32-52	1	
	22P4021-16		32-54	1	N192,
	22P4021-17		32-56	1	N193,
	22P4021-18		32-61	1	K093
	22P4021-2	*	32	1	
	22P4021-25		32-58	1	
	22P4021-26		32-62	1	
	22P4021-3	*	31	1	
	22P4021-4		32-49	1	
	22P4021-5	M	32-50	1	
	22P4021-6	M1	32	1	
	22P4021-7	M1	32	1	
1AGJ	22P4022-1	P	31	1	F163

AF Class Code or Stock No.	Part Number	Army Source Code	Figure and Index No.	Qty per Article	Micro-film Index
1AGJ	22P4022-2	P	31	1	F163
	22P4023-10		32	1	K094
1AGJ	22P4024-1	P	31-8	1	F164
	22P4040-1		32-22	1	H037
1AGJ	22P4041-1	P	32-16	1	F165
1AGJ	22P4042-1	P	32-10	1	F166
1AGJ	22P4043-1	P1	32-2	2	F167
	22P4044-1	M	32	2	F168
	22P4045-1	M1	32-23	1	T380
	22P4045-11	M	32	1	T380
	22P4045-13	M	32-18	1	T380
	22P4045-15	M		1	T380
	22P4045-19	M		1	T380
	22P4045-21		32-42	1	T380
	22P4045-401	M	32-20	1	T380
	22P4045-405	M1	32	1	T380
	22P4045-410		32	1	T380
	22P4045-412		32-13A	1	T380
	22P4045-414		32-13F	1	T380
	22P4045-416		32-15	1	T380
	22P4045-5	M1	32-25	1	T380
	22P4045-7		32-15	1	T380
	22P4045-9	M	32-3	1	T380
	22P4048-10	X2		1	C141
	22P4048-5	X2		2	C141
	22P4048-7	X2		1	C141
	22P4048-8	X2		1	C141
	22P4048-9	X2		1	C141
	22P5011-11	M		1	N194
1AGJ	22P5011-2		33	1	N194
1AGJ	22P5011-20		33	1	N194
	22P5011-21		33	1	N194
1AGJ	22P5011-30		33	1	N194
1AGJ	22P5011-31		33	1	N194
1AGJ	22P5011-32	*	33	1	N194
1AGJ	22P5011-33	*	33	1	N194
1AGJ	22P5012-1	P1	33-4	1	K096
1AGJ	22P5012-10		33	1	K096
	22P5012-2	X1		1	K096
	22P5012-5	X1		1	K096
	22P5012-6	X1		1	K096
	22P5012-7	X1		1	K096
	22P5012-8	X1		1	K096
	22P5012-9	X1		1	K096
1AGJ	22P5044-1	P	33	1	H038
	22P5046-12		33-5	1	H039
	22P5046-3	X1		1	H039
	22P5046-4	X1		1	H039
	22P5046-5	X1		1	H039
1AGJ	22P5047-1	X1		2	F171
	22P5052-1	*		1	
	22P5052-10	M		1	
	22P5052-11	M		1	
	22P5052-12	X1		1	
	22P5052-13	X1		1	
	22P5052-14	X1		10	
	22P5052-2	X1		1	
	22P5052-4	M		1	U140,
	22P5052-5	X1		1	U141
1AGJ	22P5052-50	*	33	1	
1AGJ	22P5052-59	*	33	1	
	22P5052-6	X1		1	
	22P5052-7	M		1	
	22P5052-8	M		1	
	22P5052-9	M		1	
	22P5053-17		33	1	N195, N196
	22P5058-1		33	1	N198, N199, N200
	22P5059-1		33-7	1	K097
	22P5064-1		73-7A	1	F173

AF Class Code or Stock No.	Part Number	Army Source Code	Figure and Index No.	Qty per Article	Micro-film Index
	22P6001-1		27,33	1	N201
1AGJ	22P6006-11		33	1	N202
	22P6007-1	*	33	1	N203
1AGJ	22P6007-3	*	33	1	N203
	22P6007-4		33	1	N203
1AGJ	22P6013-1	X1	33-8	2	N204
1AGJ	22P6013-3	X1		1	N204
1AGJ	22P6013-4	P1		1	N204
1AGJ	22P6040-10			7	N205
1AGJ	22P6040-3			7	N205
1AGJ	22P6040-4			7	N205
1AGJ	22P6040-5			7	N205
1AGJ	22P6040-6			7	N205
1AGJ	22P6040-7			7	N205
1AGJ	22P6040-8			14	N205
1AGJ	22P6040-9			7	N205
1AGJ	22P6041-1		33-16	5	
1AGJ	22P6041-10		33-20	1	
1AGJ	22P6041-11		33-19	1	
1AGJ	22P6041-4		33-18	1	
1AGJ	22P6041-5		33-17	1	
	22P6042-1	M		1	K098
	22P6042-2	X1		1	K098
	22P6043-4		33-28	9	H040
	22P6046-1	M		1	H042
	22P6046-3	M	33-6	1	H042
	22P6051-3		33-26	9	H043
1AGJ	22P6052-2	P	33	9	H044
1AGJ	22P6053-1	*	33	5	U142
1AGJ	22P6053-10	*	33	1	U142
1AGJ	22P6053-11	*	33	1	U142
1AGJ	22P6053-12	X1		1	U142
1AGJ	22P6053-13	X1		1	U142
1AGJ	22P6053-2	*	33	1	U142
1AGJ	22P6053-20	P	33	7	U142
1AGJ	22P6053-21	P	33	1	U142
1AGJ	22P6053-3	*	33	1	U142
1AGJ	22P6053-30	P	33	1	U142
1AGJ	22P6053-31	P	33	1	U142
1AGJ	22P6053-4	X1		1	U142
1AGJ	22P6053-5	X1		1	U142
1AGJ	22P6053-6	X1		1	U142
	22P6053-7	M		5	U142
	22P6054-1		33-24	9	H045
1AGJ	22P6054-2	P	33	9	H045
1AGJ	22P6055-2	P	33	9	H046
1AGJ	22P6056-1	*	33-15	7	
1AGJ	22P6056-13	M	33	14	
	22P6056-2	X1	33	14	N210,
	22P6056-4	M	33	7	N211
	22P6056-6	M	33	7	
1AGJ	22P6056-9	*	33	7	
1AGJ	22P7001-1	*	38	1	N212
1AGJ	22P7001-25	P1	38-1	1	N212
1AGJ	22P7001-50	*	38	1	N212
	22P9000-1		29-33	1	
	22R0001-3	*	2	1	P017
	22R0001-4	*	2	1	P017
	22R0001-5	*	2	1	P017
1AGJ	22R0001-7	X1	2	1	P017
	22R1003-10	X1	3-102	6	P018
	22R1003-11	X1	3-95	1	P018
	22R1003-12	X1	3	48	P018
	22R1003-13	X1	3	186	P018
	22R1003-14	X1	3	48	P018
	22R1003-141	X1	3	3	P018
	22R1003-142	X1	3	3	P018
	22R1003-15	X1	3-24	6	P018
	22R1003-16	X1	3	12	P018
	22R1003-17	X1	3	12	P018
	22R1003-20	X1	3-28	6	P018
	22R1003-22	X1	3	48	P018
	22R1003-23	X1	3	186	P018

AF Class Code or Stock No.	Part Number	Army Source Code	Figure and Index No.	Qty per Article	Micro-film Index
	22R1003-24	X1	3	48	P018
1AGJ	22R1003-241	X1	3	3	P018
1AGJ	22R1003-242	X1	3	3	P018
	22R1003-25	X1	3	48	P018
	22R1003-26	P	3-11	6	P018
	22R1003-27	X1	3	12	P018
	22R1003-29	X1	3-96	120	P018
1AGJ	22R1003-31	P	3-83	6	P018
	22R1003-33		3-14	6	P018
	22R1003-341	X1	3	3	P018
	22R1003-342	X1	3	3	P018
	22R1003-441	X1	3	3	P018
	22R1003-442		3	3	P018
	22R1003-45	X1	3	6	P018
	22R1003-46	X1	3	6	P018
	22R1003-47	X1	3-27	6	P018
	22R1003-49		3	1	P018
	22R1003-50		3	1	P018
	22R1003-7	X1	3-99	12	P018
	22R1003-8	X1	3-98	12	P018
	22R1003-9	X1	3-94	6	P018
	22R1088-1	X1		AR	F197
1AGJ	22R1089-1	P1	3A	6	T389
	22R1089-2	X1		6	T389
1AGJ	22R1091-1	*	3A-3	12	T122
1AGJ	22R1092-1	P1	3A-2	12	H091
	22R1100-1	X1		6	
	22R1101-1	X1	3A-18	6	T193
	22R1101-2	X1		6	T193
	22R1101-3	X1		6	T193
	22R1102-1	X1		6	T123
	22R1103-2	X1		6	H093
1AGJ	22R1104-1	*	3A-17	AR	T124
1AGJ	22R1105-1	P	3A	24	T125
1AGJ	22R1106-1	*	3A-14	AR	T126
	22R1107-1	X1		6	
	22R1108-1	X1		6	F201
	22R1109-1	X1		6	K147
1AGJ	22R1110-1	*		24	F202
	22R1120-1	X1		12	F203
1AGJ	22R1132-1	*	3A-13	12	T127
1AGJ	22R1148-1	*		12	T197
1AGJ	22R1148-2	*		12	T197
1AGJ	22R1149-1	*	3A-4	12	T128
	22R1159-1	M1		198	
	22R1180-10	X1	3A	6	U157
	22R1180-7	X1	3A	6	U157
	22R1180-8	X1	3A	6	U157
	22R1180-9	X1	3A	6	U157
1AGJ	22R1181-1	X1	3A	3	U158
	22R1181-2	X1	3A	3	U158
	22R1181-3	X1	3A	6	U158
	22R1181-4	X1	3A	6	U158
	22R1182-1	X1	3A	3	U159
	22R1182-2	X1	3A	3	U159
	22R1182-3	X1	3A-11	3	U159
	22R1182-4	X1	3A	3	U159
	22R1182-5	X1		3	U159
	22R1182-6	X1		3	U159
	22R1184-1	X1		12	T198
	22R1185-1	X1		6	T129
	22R1186-1	X1		6	U160
	22R1186-2	X1		6	U160
	22R1187-1	X1		6	T130
	22R1188-1	X1		6	T390
	22R1189-1	X1		6	T131
1AGJ	22R1190-1	P1	3A-7	6	K148
1AGJ	22R1191-3	*	3A	2	H098
1AGJ	22R1191-4	*	3A	2	H098
1AGJ	22R1192-1	P1		6	
	22R1192-2	M		6	
	22R1192-3	X1		6	
	22R1192-4	M1		12	
	22R1192-5	M1		12	
	22R1192-6	M1		48	
1AGJ	22R1193-1	P1		12	
	22R1193-2	X1		12	
	22R1193-3	X1		24	
	22R1193-4	M1		144	
	22R1193-5	M1		24	
	22R1193-7	M1		144	
1AGJ	22R1194-1	P1		78	
	22R1194-2	X1		78	
	22R1194-3	X1		78	
	22R1194-4	M1		780	
	22R1194-5	M1		156	
	22R1195-1	X1		294	
	22R1195-3	X1		186	
	22R1196-1	X1		78	
	22R1196-2	X1		78	
	22R1197-1	X1		6	
	22R1198-2	X1		12	
	22R1199-1	X1		6	F204
	22R1200-1	*	3	6	P022
	22R1200-2	*	3-5	6	P022
	22R1201-1	P1	3-4	6	H099
1AGJ	22R1202-1	P	3-1	6	H100
	22R1211-2	X1	3-104	6	P023
	22R1211-5		3	1	P023
1AGJ	22R1215-1	X1	3-101	6	F206
1AGJ	22R1215-2	X1	3-97	30	F206
1AGJ	22R1217-1	P	3-82	12	F207
1AGJ	22R1218-1	P	3-85B	6	H103
	22R1218-11		3-85	1	H103
	22R1218-4	X1	3-86	6	H103
1AGJ	22R1219-1	P	3-9	6	H104
1AGJ	22R1220-10	P	3-36	6	P024
1AGJ	22R1220-11	P	3-37	6	P024
1AGJ	22R1220-12	P	3-38	6	P024
1AGJ	22R1220-13	P	3-39	6	P024
1AGJ	22R1220-14	P	3-40	6	P024
1AGJ	22R1220-15	P	3-41	6	P024
1AGJ	22R1220-16	P	3-42	6	P024
1AGJ	22R1220-17	P	3-43	6	P024
1AGJ	22R1220-18	P	3-44	6	P024
1AGJ	22R1220-19	P	3-45	6	P024
1AGJ	22R1220-20	P	3-46	6	P024
1AGJ	22R1220-21	P	3-47	6	P024
1AGJ	22R1220-22	P	3-48	6	P024
1AGJ	22R1220-23	P	3-49	6	P024
1AGJ	22R1220-24	P	3-50	6	P024
1AGJ	22R1220-25	P	3-51	6	P024
1AGJ	22R1220-26	P	3-52	6	P024
1AGJ	22R1220-27	P	3-53	6	P024
1AGJ	22R1220-28	P	3-54	6	P024
1AGJ	22R1220-29	P	3-55	6	P024
1AGJ	22R1220-3	P	3-29	6	P024
1AGJ	22R1220-30	P	3-56	6	P024
1AGJ	22R1220-31	P	3-57	6	P024
1AGJ	22R1220-32	P	3-58	6	P024
1AGJ	22R1220-33	P	3-59	6	P024
1AGJ	22R1220-34	P	3-60	6	P024
1AGJ	22R1220-35	P	3-61	6	P024
1AGJ	22R1220-36	P	3-62	6	P024
1AGJ	22R1220-37	P	3-63	6	P024
1AGJ	22R1220-38	P	3-64	6	P024
1AGJ	22R1220-39	P	3-65	6	P024
1AGJ	22R1220-4	P	3-30	6	P024
1AGJ	22R1220-40	P	3-66	6	P024
1AGJ	22R1220-41	P	3-67	6	P024
1AGJ	22R1220-42	P	3-68	6	P024
1AGJ	22R1220-43	P	3-69	6	P024
1AGJ	22R1220-44	P	3-70	6	P024
1AGJ	22R1220-45	P	3-71	6	P024
1AGJ	22R1220-46	P	3-72	6	P024
1AGJ	22R1220-47	P	3-73	6	P024

AF Class Code or Stock No.	Part Number	Army Source Code	Figure and Index No.	Qty per Article	Micro-film Index
1AGJ	22R1220-48	P	3-74	6	P024
1AGJ	22R1220-49	P	3-75	6	P024
1AGJ	22R1220-5	P	3-31	6	P024
1AGJ	22R1220-50	P	3-76	6	P024
1AGJ	22R1220-51	P	3-77	6	P024
1AGJ	22R1220-52	P	3-78	6	P024
1AGJ	22R1220-53	P	3-79	6	P024
1AGJ	22R1220-6	P	3-32	6	P024
1AGJ	22R1220-7	P	3-33	6	P024
1AGJ	22R1220-8	P	3-34	6	P024
1AGJ	22R1220-9	P	3-35	6	P024
1AGJ	22R1228-1	P	3-81	6	H106
1AGJ	22R1228-2	P	3-80	6	H106
1AGJ	22R1230-1	P	3-85A	1	H107
1AGJ	22R1231-1	P	3	6	K151
	22R1231-2	X1	3-26	6	K151
	22R1231-3	X1	3-25	6	K151
1AGJ	22R1232-1	P	3-10	6	F208
	22R1235-1		3	6	P025
	22R1235-11	P	3	6	P025
	22R1235-12	P	3-13	6	P025
	22R1235-2		3	6	P025
	22R1236-1		3-12	6	H108
	22R1237-1	P	3-84	1	F209
	22R1238-1	P	3	6	D425
	22R1239-1	P	3	6	F210
	22R1241-1	*	3	6	H109
	22R1241-2	*	3-88	6	H109
1AGJ	22R1241-3	P	3-89	6	H109
	22R1241-4	P	3	6	H109
	22R1241-5	A1	3	6	H109
1AGJ	22R1242-1	P	3-8	6	H110
	22R1243-1	A	3	12	F211
1AGJ	22R1243-2	P	3-93	AR	F211
1AGJ	22R1243-4	P	3-91	12	F211
1AGJ	22R1243-5	P	3-92	12	F211
1AGJ	22R1244-1	P	3-19	6	H111
1AGJ	22R1245-1	P	3-22	30	H112
1AGJ	22R1246-1	P	3-20	12	F212
1AGJ	22R1247-1	P	3-21	12	F213
1AGJ	22R1248-1	P	3-23	AR	F214
1AGJ	22R1251-13	*	3	1	K152
1AGJ	22R1251-14	*	3	1	K152
1AGJ	22R1251-23	*	3	1	K152
1AGJ	22R1251-24	*	3	1	K152
1AGJ	22R1251-33	P1	3	1	K152
1AGJ	22R1251-34	P1	3	1	K152
	22R1251-35		3	1	K152
	22R1251-36		3	1	K152
1AGJ	22R1300-1	P1	3A-16	6	F215
	22R1302-1	X1		6	
	22R1302-2	X1		6	
	22R1303-1	X1		6	
	22R1311-1		3A-15	6	H116
1AGJ	22R1312-1	P1	3A-5	6	K153
1AGJ	22R1318-1	P1	3A-8	6	K155
1AGJ	22R1319-1	P1	3A	6	K156
1AGJ	22R1320-1	P1	3A-9	12	T391
	22R1326-1		3A	24	T133
1AGJ	22R1329-1	P1	3A-10	6	K157
1AGJ	22R1332-1		3A-12	24	F220
1AGJ	22R1358-1	P	3-17	6	
1AGJ	22R1358-2	P	3-18	6	
	22R1361-1		3-15	6	
1AGJ	22R1363-1	P	3-16	1	
1AGJ	22R1364-1	P1	3	6	U163
1AGJ	22R2001-10	*	2	1	P031
	22R2001-11		2	1	P031
	22R2001-12		2	1	P031
1AGJ	22R2001-13	*	2	1	P031
1AGJ	22R2001-14	*	2	1	P031
	22R2001-15	*	2	1	P031
	22R2001-16	*	2	1	P031

AF Class Code or Stock No.	Part Number	Army Source Code	Figure and Index No.	Qty per Article	Micro-film Index
1AGJ	22R2001-7	*	2	1	P031
1AGJ	22R2001-8	*	2	1	P031
1AGJ	22R2001-9	*	2	1	P031
1AGJ	22R2047-1	P1	2-4	2	H128
1AGJ	22R2048-1	P	2-5	2	H129
1AGJ	22R2049-1	P	2-3	1	H130
1AGJ	22R2078-1	P1	2-8	12	H136
1AGJ	22R2099-1	P	5-1	1	K168
1AGJ	22R2108-1	*	2	2	T204
1AGJ	22R2108-2	P1	2-2	2	T204
1AGJ	22R2111-1		2-7	1	F236
1AGJ	22R2115-1	P1	2	1	H147,
1AGJ	22R2115-2	P1	2-6	1	H148
	22R3001-1	*	4	1	P041
1AGJ	22R3001-2	*	4	1	P041
1AGJ	22R3001-4	*	4	1	P041
	22R3001-5	*	4	1	P041
	22R3001-6	A	4	1	P041
	22R3001-7	*	4	1	P041
	22R3002-1	*	4-1	1	P042
1AGJ	22R3002-2	*	4	1	P042
1AGJ	22R3002-4	*	4	1	P042
	22R3002-5	*	4	1	P042
	22R3002-6	A	4	1	P042
	22R3002-7	*	4	1	P042
1AGJ	22R3011-3	*	4	1	U164
1AGJ	22R3011-4	*	4	1	U164
	22R3011-5	A	4	1	U164
	22R3011-6	A	4	1	U164
	22R3013-1	*	4	1	P046
	22R3013-2	*	4	1	P046
1AGJ	22R3013-3	A	4	1	P046
1AGJ	22R3013-4	A	4	1	P046
1AGJ	22R3014-11	P1	4	2	P047
	22R3014-2	X1	4-74	2	P047
	22R3014-3	X1	4-75	2	P047
	22R3014-4	X1	4	AR	P047
	22R3014-5	P1	4-71	2	P047
	22R3014-6	P1	4-73	18	P047
	22R3014-7	P1	4-70	2	P047
	22R3014-8	P1	4	2	P047
1AGJ	22R3015-1	A	4	6	T396
	22R3015-2		4-33	3	T396
1AGJ	22R3017-1	A	4	2	H153
1AGJ	22R3041-2	P	4-31	4	H155, H156
1AGJ	22R3043-1	P1	4	2	
1AGJ	22R3043-2	P1	4	2	
	22R3043-3	X1	4	2	
	22R3043-4	X1	4	2	K170,
1AGJ	22R3043-5	X1	4-47	8	H157
	22R3043-7	X1	4-46	2	
	22R3043-8	X1	4	2	
1AGJ	22R3046-1	P1	4-62	2	K172
1AGJ	22R3048-1	*	4	1	
1AGJ	22R3048-10	P1	4-80	1	P049,
1AGJ	22R3048-2	*	4	1	P050
1AGJ	22R3048-9	P1	4-79	1	
1AGJ	22R3050-1	P1	4	1	K173
1AGJ	22R3050-2	P1	4	1	K173
	22R3050-3	X1	4-24	2	K173
1AGJ	22R3052-1	P1	4	2	P052
	22R3052-2	*	4	2	P052
	22R3052-3	*	4	2	P052
1AGJ	22R3052-4	X1	4-26	2	P052
1AGJ	22R3053-1	P1	4-67	2	K174
1AGJ	22R3056-1	P	4-14	2	F241
1AGJ	22R3057-1	*	4-27	4	F242
1AGJ	22R3063-1	P	4-29	2	F243
1AGJ	22R3064-1	P	4-23	2	F244
1AGJ	22R3065-1	P	4-22	2	F245
1AGJ	22R3066-1	P	4-25	2	F246
1AGJ	22R3068-1	A	4	1	T397

AF Class Code or Stock No.	Part Number	Army Source Code	Figure and Index No.	Qty per Article	Micro-film Index
1AGJ	22R3068-2	A	4	1	T397
1AGJ	22R3068-3	P1	4-19	1	T397
1AGJ	22R3068-4	P1	4	1	T397
1AGJ	22R3070-1	*	4	2	
	22R3070-2	*	4	2	
1AGJ	22R3070-3	P1	4	2	P057,
	22R3070-4	X1	4	1	P058
	22R3070-5	X1	4-66	1	
1AGJ	22R3072-1	P	4-56	4	F247
1AGJ	22R3079-1	P1	4-37	6	T399
	22R3079-2		4	1	T399
1AGJ	22R3080-1	P1	4-41	6	H163
1AGJ	22R3081-1	P1	4-43	6	T208
1AGJ	22R3082-1	P	4-39	6	F252
1AGJ	22R3083-1	P	4-44	6	F253
1AGJ	22R3084-1	P1	4-60	8	F254
1AGJ	22R3085-1	P	4-58	8	F255
1AGJ	22R3089-1	P	4-20	2	F258
1AGJ	22R3090-1	P	4-12	2	F259
1AGJ	22R3095-1	P1	4-52	4	H168
1AGJ	22R3096-1	A	4-2	8	T401
	22R3096-2		4	1	T401
1AGJ	22R3097-1	P	4-21	2	F260
1AGJ	22R3098-1	*	4	4	F261
1AGJ	22R3098-2	P	4-50	4	F261
1AGJ	22R3098-3	P	4-63	4	F261
1AGJ	22R3099-1	P	4-40	6	D433
1AGJ	22R3101-2	P1	4-15	2	F263
1AGJ	22R3102-1	P	4-64	2	F264
1AGJ	22R3103-1	*	4-65	8	D434
1AGJ	22R3105-1	P1	4-10	8	T209
1AGJ	22R3106-1	P	4-5	16	F265
1AGJ	22R3107-1	*	4	8	T210
1AGJ	22R3107-2	*	4	8	T210
1AGJ	22R3107-3	P	4-9	1	T210
1AGJ	22R3107-4	P	4-7	1	T210
1AGJ	22R3110-1	*	4-84	4	F266
1AGJ	22R3111-1	P	4-57	4	D435
1AGJ	22R3112-1	P	4-85	2	F267
1AGJ	22R3113-1	P	4-86	2	F268
1AGJ	22R3114-1	P	4-10A	8	D436
	22R3115-1	X1		8	T211
1AGJ	22R3116-1	P1	4	4	T402
	22R3116-2	X1	4-55	4	T402
1AGJ	22R3118-1	P	4-48	AR	F269
1AGJ	22R3119-1	P	4	4	T138
	22R3119-2		4-51	2	T138
	22R3119-3		4	2	T138
1AGJ	22R3139-1	M	4-42	6	F275
1AGJ	22R3143-1	*	4-78	4	F276
1AGJ	22R3147-1	P	4-32	4	H175
1AGJ	22R3152-1	P	4	4	F279
	22R3153-2	P	4-77A	4	F280
1AGJ	22R3155-1	P	4	4	H177
1AGJ	22R3155-2	P	4-78A	4	H177
1AGJ	22R3156-1	P	4-78B	4	F281
	22R6001-1	*	5	1	P059
1AGJ	22R6001-2	P1	5	1	P059
	22R6001-3	A1	5-2	1	P059
1AGJ	22R6010-1	P	5	1	P060
	22R6010-2	P	5	1	P060
1AGJ	22R6046-1	*	5-3	3	K181
1AGJ	22R6047-1	P	5	3	K182
1AGJ	22R6048-1	P	5	1	H178
1AGJ	22R6053-1	P1	5	3	K183
	22S0001-1		7	1	P075
	22S1001-1		9	1	P076
1AGJ	22S1045-1		9-1	1	K193
	22S1045-3		9	1	K193
	22S1048-1	*		1	K195
	22S1048-2	*		1	K195
	22S1048-3	X1		1	K195
	22S1048-4	X1		1	K195
	22S1051-1		9-3	1	K198
	22S1051-3		9	1	K198
1AGJ	22S1054-1		9-5	1	K199
	22S1054-3		9	1	K199
1AGJ	22S1055-1			1	H194
1AGJ	22S1055-2			1	H194
1AGJ	22S1061-1		9-23	1	K203
1AGJ	22S1061-2		9	1	K203
1AGJ	22S1061-3		9	1	K203
1AGJ	22S1061-4		9	1	K203
	22S1063-1		9-8	1	P081
	22S1063-2		9	1	P081
1AGJ	22S1063-3		9	1	P081
1AGJ	22S1063-4		9	1	P081
	22S1065-1		9	1	K205
	22S1065-3		9	1	K205
	22S1067-1		9	1	K207
	22S1067-3		9	1	K207
1AGJ	22S1069-1	P1	11-13	1	K209
1AGJ	22S1069-2	P1	11	1	K209
1AGJ	22S1071-1	X2		1	K211
	22S2013-1	*	20,21	1	P088
	22S2014-1	*	20-5, 21	1	P089
	22S2016-1	*	20,21	1	P090
	22S2018-1	*	20	1	P091
	22S2018-2	*	20,21	1	P091
	22S2019-1	*	20,21	1	P092
	22S2023-1		20	1	P093
	22S2023-20	*	21	1	P093
	22S2023-26	*	20,21	1	P093
	22S2028-1		20-60	1	P094
	22S2032-1		20	1	P096
	22S2040-1	*	20,21	1	P099
	22S2040-2	A1	20,21	1	P099
	22S2040-27	*	21	1	P099
	22S2040-28	M	21	1	P099
	22S2040-29	M	21	1	P099
	22S2040-30	M	21	1	P099
	22S2041-1		20	1	P100
	22S2048-1		20	1	P102
	22S2048-10	*	21	1	P102
	22S2049-1	*	7,8, 11	1	K220
	22S2049-2	*	7-75, 8-64, 11	1	K220
	22S2049-3	M	11	1	K220
	22S2049-4	M1	11	1	K220
	22S2050-1		11	2	K221
1AGJ	22S2050-2	P	11-35	1	K221
1AGJ	22S2055-1		20-51	1	P104
	22S2056-1		20-42	1	K224
1AGJ	22S2057-1		20-59	1	K225
	22S2058-1		20-52	1	H195
	22S2059-1		20-49, 22-63	6	F297
	22S2060-1		20-54, 22-67	2	F298
	22S2060-2		20-46, 22-60	2	F298
	22S2068-1	*	20,21	1	P107,
	22S2068-58	M	20	8	P108
	22S2070-1	M	20-10	1	H198
	22S2070-2	M	20-11	1	H198
	22S2070-3	M	20-12	1	H198
	22S2076-1		20	1	K230
	22S2077-1	*	20,21	1	K231
	22S2091-1		20	1	K232
	22S2093-1		20	1	K233
	22S2094-1		20	1	P115
	22S2094-2		20	1	P115
	22S2095-1		20	1	K234

AF Class Code or Stock No.	Part Number	Army Source Code	Figure and Index No.	Qty per Article	Micro-film Index
	22S2096-1		20	1	K235
	22S2096-4		20	1	K235
	22S2097-1		20	1	K236
	22S2097-10		20-39	1	K236
	22S2098-1		20,21	1	K237
	22S2269-1		20	2	D438
	22S3002-1	*	7,19	1	
	22S3002-101		16,19	1	
	22S3002-102	*	16,19	1	
1AGJ	22S3002-103	P1	16,19	1	U178,
1AGJ	22S3002-104	P1	16,19	1	U179
	22S3002-5	P1	16-23, 19	1	
	22S3002-6	P1	16-24, 19	1	
	22S3003-3	*	7-70, 8-58	1	
	22S3003-4	*	7-71, 8-59	1	
	22S3004-1		32	1	P116
	22S3004-3		32	AR	P116
	22S3004-5		32	1	P116
1AGJ	22S3041-1	P	10-1	1	K239
1AGJ	22S3041-2		10	1	K239
1AGJ	22S3041-3	P	10-2	1	K239
1AGJ	22S3041-4	P	10	1	K239
1AGJ	22S3042-1		10-10	1	H200
1AGJ	22S3044-1	P	10-15	1	F303
1AGJ	22S3044-2	P	10-8	2	F303
1AGJ	22S3044-3	P	10-17	1	F303
1AGJ	22S3045-1	P	10-16	1	F304
1AGJ	22S3045-2	P	10-9	2	F304
1AGJ	22S3045-3	P	10-18	1	F304
1AGJ	22S3050-1		16-30	1	P118
	22S3050-11		16	1	P118
	22S3050-9		16	1	P118
	22S3051-1	*		1	
	22S3052-1	M		1	
	22S3062-1	X1	19-7	12	F305
	22S3064-401	*	19	10	H204
	22S3064-402	*	19	2	H204
1AGJ	22S3064-405	P1	19-3	10	H204
1AGJ	22S3064-406	P1	19-8	2	H204
	22S3064-5	M1	19	12	H204
	22S3064-7	M1	19-6	12	H204
1AGJ	22S3065-1	P	19-12	6	H205
1AGJ	22S3065-3	P		1	H205
1AGJ	22S3065-5	P		1	H205
1AGJ	22S3065-7	P		1	H205
1AGJ	22S3066-1	P	19-13	4	F307
1AGJ	22S3066-3			1	F307
1AGJ	22S3066-5			1	F307
	22S3069-1		30-4	2	F309
	22S3105-1		32	1	P122
	22S3105-3		32-35	1	P122
	22S3106-1		32-46	1	K240
	22S3106-13	*	32	1	K240
1AGJ	22S3112-1			1	
1AGJ	22S3113-1		32	1	
1AGJ	22S3113-15	M1		1	
1AGJ	22S3113-19	M1		1	
1AGJ	22S3113-21			1	
	22S3113-3		32-37	1	
1AGJ	22S3116-1	M1	32-33	1	K243
	22S3116-3	M1	32	1	K243
	22S3116-5	M	32-34	2	K243
1AGJ	22S3117-1		16-19, 32-28	1	
1AGJ	22S3117-9	P	32	1	
	22S3118-1	M1	32-32	1	H206
1AGJ	22S3119-1	M1	32-38	1	K244
1AGJ	22S3119-15	M1	32	1	K244
1AGJ	22S3119-7		32	1	K244

AF Class Code or Stock No.	Part Number	Army Source Code	Figure and Index No.	Qty per Article	Micro-film Index
	22S3123-1	M1	32-44	1	F311
	22S3124-1	*	32-45	1	K245
1AGJ	22S3125-1	M		2	F312
	22S3147-1	*	32-6	1	P126
	22S3152-1		19	10	K252
	22S3152-2		19	2	K252
	22S3152-7		19-5	10	K252
	22S3152-8		19	2	K252
	22S4010-1		12	1	P130
	22S4011-11		7-43	1	
	22S4011-21		7	1	
	22S4011-23		7-41	2	P131,
	22S4011-3	*	7-39	4	P132
	22S4011-4		7-40	6	
	22S4011-9		7-42	1	
	22S4012-1	*	7,89	1	P133
	22S4012-10		7-25	1	P133
	22S4012-11		7-29	1	P133
	22S4012-12		7-26	2	P133
	22S4012-13		7-30	1	P133
	22S4012-15		7-31	1	P133
	22S4012-16		7-27	1	P133
	22S4012-17		7-35	1	P133
	22S4012-19		7-36	1	P133
	22S4012-2		7,89	1	P133
	22S4012-21		7-37	1	P133
	22S4012-3		7-22	1	P133
	22S4012-5		7-23	1	P133
	22S4012-7		7-24	1	P133
	22S4012-9		7-28	2	P133
	22S4030-1		12-10	1	K256
	22S4051-1		90-20	1	U180
	22S4051-101		90	1	U180
	22S4051-201		90	1	U180
	22S4052-1		90-16	1	P143
	22S4053-1		12	1	P144
1AGJ	22S4053-2	P	12-2	1	P144
1AGJ	22S4053-3	P	12-5	1	P144
	22S4053-5		12-1	2	P144
	22S4054-1		16-8	1	K264
	22S4057-1		85	1	P147
	22S4057-13	*	85	1	P147
	22S4057-7	M	85	2	P147
	22S4057-8		85	1	P147
1AGJ	22S4059-2	P1		7	D440
	22S4060-2		74-9	3	P148
	22S4074-1		74	1	P151
	22S4074-15	*	74	1	P151
	22S4074-16	*	74	1	P151
	22S4074-2		74	1	P151
1AGJ	22S4075-1		7	16	H210,
1AGJ	22S4075-3		7	9	H211
1AGJ	22S4076-1		7	6	F316
1AGJ	22S4077-1	P1	7	1	T412
1AGJ	22S4079-3			1	K265
1AGJ	22S4079-4			1	K265
	22S4080-1		7	1	K266
	22S4080-2		7	1	K266
1AGJ	22S4081-1	P1	12	1	K267
1AGJ	22S4081-2	P1	12-8	1	K267
	22S4082-1		12	2	K268
1AGJ	22S4082-2	P1	12-9	2	K268
	22S4083-1	*	13,14	1	P152
1AGJ	22S4083-101	*	13	1	P152
	22S4083-3	*	13-1	1	P152
	22S4083-404		13	1	P152
	22S4083-405	*	13,14	1	P152
	22S4083-406		13	1	P152
1AGJ	22S4083-407	P	13	1	P152
	22S4083-41	M1	13-7	1	P152
	22S4083-43	M1	13-10	1	P152
	22S4083-44	M1	13-18	1	P152
1AGJ	22S4083-5	P	13-4	2	P152

AF Class Code or Stock No.	Part Number	Army Source Code	Figure and Index No.	Qty per Article	Micro-film Index
	22S4083-51	M1	13-8	2	P152
	22S4083-57	M1	13-9	1	P152
	22S4083-58	M1	13-19	1	P152
1AGJ	22S4083-7	P	13-5	1	P152
	22S4084-1	*	13,14	1	
1AGJ	22S4084-101	*	13	1	
	22S4084-29	*	13-20	1	
	22S4084-3	*	13-12	1	
	22S4084-400	*	13	1	
	22S4084-401		13,14	1	U181,
	22S4084-402	*	13	1	U182
	22S4084-403	M	13	1	
1AGJ	22S4084-404	P	13	1	
	22S4084-407	M	13-22	1	
	22S4084-408	*	13-11	3	
1AGJ	22S4084-5	P	13-16	1	
1AGJ	22S4085-1			2	F318
1AGJ	22S4085-2			2	F318
1AGJ	22S4085-3			2	F318
1AGJ	22S4085-4			2	F318
1AGJ	22S4087-1	P1		8	H213
1AGJ	22S4087-2		89	8	H213
1AGJ	22S4088-1			2	H214
	22S4089-1		7,89	1	P155
	22S4089-3		6-34	1	P155
	22S4089-5		6-33	1	P155
	22S4089-7		6-32	1	P155
1AGJ	22S4090-1	P1		2	
1AGJ	22S4090-3	P1		4	K269,
1AGJ	22S4090-5			1	K270
1AGJ	22S4090-7			1	
1AGJ	22S4091-1			1	H215
1AGJ	22S4093-1	P1		9	K271
1AGJ	22S4099-1		79	1	F319
1AGJ	22S4101-1	*	7	1	P159
	22S4101-3	P	7,8	2	P159
	22S4142-1		16	1	P160
	22S4142-2		16-51	1	P160
	22S4303-1	*	7	1	P162
	22S4303-3		7	2	P162
	22S4303-32	M1	7,8	1	P162
	22S4304-41	M	77	1	P163
	22S4304-43		77	1	P163
	22S4304-45		77	1	P163
	22S4305-1		16-16	1	K273
	22S4305-3		16	1	K273
	22S4305-9		16	1	K273
	22S4307-1	P	77	1	
	22S4381-1		16	1	K292
	22S4381-2		16-49	1	K292
1AGJ	22S4387-1	P1	89	12	H226
	22S4388-1		16	1	K295
	22S4388-2		16-50	1	K295
	22S4389-1		89	1	H227
	22S5001-1		7,11	1	P182
	22S5001-9	*	8,11	1	P182
	22S5002-1		7,11	1	P183
	22S5002-3		7-55	1	P183
	22S5002-4		7-56	1	P183
	22S5002-65		7,11	1	P183
	22S5003-1		7,11	1	P184

AF Class Code or Stock No.	Part Number	Army Source Code	Figure and Index No.	Qty per Article	Micro-film Index
	22S5004-1	*	7-16, 8-21	2	P185
	22S5004-2	A1	7,8	2	P185
	22S5005-1	*	7-63	1	P186
	22S5005-101	M1	8-52	1	P186
	22S5006-1	*	7-69, 8-56	1	P187
	22S5040-1	*	7-4	1	P188
	22S5040-2	A1	7,8	1	P188
	22S5040-33	M1	8-4	1	P188
1AGJ	22S5043-1	P1	11	1	H228
1AGJ	22S5043-2	P1	11	1	H228
	22S5044-1	*	11-27	1	U184
1AGJ	22S5044-10	P	11	1	U184
	22S5044-11	X1	11	1	U184
	22S5044-12	X1	11	1	U184
	22S5044-2	*	11-28	1	U184
	22S5044-3		11	1	U184
	22S5044-4		11	1	U184
	22S5044-5	*	11	1	U184
	22S5044-6	*	11	1	U184
	22S5044-7	X1	11	1	U184
	22S5044-8	X1	11	1	U184
1AGJ	22S5044-9	P	11	1	U184
	22S5045-1		7-76, 11-48	1	P190
	22S5046-1		11	1	P191
	22S5049-1		11-37	2	H229
	22S5050-2	M1	11-39	2	K296
1AGJ	22S5052-1			1	H230
	22S5052-11		11	2	H230
1AGJ	22S5052-12		11	4	H230
1AGJ	22S5052-3		90	2	H230
	22S5052-4	M1	11-11	2	H230
	22S5052-5	M1	11-12	2	H230
	22S5052-8		11-47	2	H230
	22S5052-9		11-49	2	H230
	22S5056-1		7,11	4	P193
	22S5056-2		7-77, 11	1	P193
	22S5058-1		11	1	P194
	22S5058-2		11	1	P194
1AGJ	22S5058-3	*	11-1	1	P194
1AGJ	22S5058-4	*	11	1	P194
	22S5058-5	*	11	1	P194
	22S5058-6	*	11	1	P194
	22S5059-1		11	1	K298
	22S5059-2		11	1	K298
	22S5063-1	*	7-5, 8-5	1	P195
	22S5063-2	*	7-6	1	P195
	22S5063-20	*	8-6	1	P195
	22S5063-21	M1	8	1	P195
	22S5063-3	A1	7,8	1	P195
	22S5063-4	M1	7	1	P195
1AGJ	22S5067-1	P	16-33	1	K300
1AGJ	22S5067-2	P	16-34	1	K300
	22S5067-20	M	16	8	K300
	22S5067-21	M	16	1	K300
	22S5067-22		16	1	K300
1AGJ	22S5067-3	P	16-35	1	K300
1AGJ	22S5067-4	P	16-36	1	K300

AF Class Code or Stock No.	Part Number	Army Source Code	Figure and Index No.	Qty per Article	Micro-film Index
1AGJ	22S5067-5	P	16-37	1	K300
1AGJ	22S5067-6	P	16-38	1	K300
1AGJ	22S5067-7	P	16-39	2	K300
	22S5070-1		7-57	1	P198
1AGJ	22S5077-1	P		1	F324
1AGJ	22S5080-1	P	11-31	1	D443
	22S5082-1		7,11	1	P201
	22S5082-3		7	1	P201
	22S5082-4		7	1	P201
	22S5084-1		7-54	1	P202
	22S5084-2		7	1	P202
	22S7001-1		7-3, 11	1	P203, P204,
	22S7001-106	*	8-3, 11	1	P205, P206,
	22S7001-114	A	8,11	1	P207,
	22S7001-2		7,11	1	P208
	22S7002-1		7-10	1	P209,
	22S7002-2		7	1	P210
	22S7003-1		7-11	1	
	22S7003-3		7	1	
	22S7004-1		7-17	1	
	22S7004-3		7	1	
	22S7005-1		7-19	1	
	22S7005-3		7	1	
	22S7006-1		7-44	1	
	22S7006-3		7	1	
	22S7007-1		7-46	1	
	22S7007-3		7	1	
	22S7008-1		7-47	1	
	22S7008-3		7	1	
	22S7009-1		7-50	1	
	22S7009-3		7	1	
	22S7010-1		7-52	1	P211
	22S7010-2		7	1	P211
	22S7011-1		7-53	1	
	22S7011-201	*	8-42, 9	1	
	22S7011-203	A1	8	1	
	22S7011-429		8	1	
	22S7011-430		8	1	
	22S7012-1		7-59, 9	1	
	22S7012-3		7	1	
	22S7013-1		7-62	1	
	22S7013-3		7	1	
	22S7014-1		7	1	
	22S7014-3		7-64	1	
	22S7014-4		7	1	
	22S7015-1		7-67, 10	1	P212
	22S7015-2		7,10	1	P212
	22S7015-3	A1	7-68	1	P212
	22S7016-1		7-72	1	
	22S7016-3		7	1	
	22S7017-1		7-74	1	P213
	22S7018-1		7-78	1	P214
	22S7019-1		15	1	
	22S7019-11		15-6	1	
	22S7019-13		15-7	1	
	22S7019-15		15-8	1	
	22S7019-17		15-9	1	
	22S7019-19		15-10	1	
	22S7019-21		15	1	P215,
	22S7019-3		15-2	1	P216
	22S7019-368		15-12	1	
	22S7019-371		15	26	
	22S7019-5		15-3	1	
	22S7019-7		15-4	1	
	22S7019-9		15-5	1	
	22S7020-1		7-8	1	
	22S7020-3		7	1	
	22S7022-1		7-38	1	
	22S7022-3		7	1	
	22S7024-1		7-48	1	
	22S7024-3		7	1	
	22S7025-1		7-49	1	P217
	22S7026-149	*	15	1	P218,
	22S7026-162		15-1	1	P219, P220, P221, P222, P223
	22S7031-1	A1	7	1	P230
	22S7031-31	A1	8	1	P230
	22S7032-1		15	1	Q001,
	22S7032-401		15	1	Q002
	22S7033-1	*		1	Q003
	22S7034-19	M	7-59A, 8-47A	1	Q004
	22S7034-21	M	7	1	Q004
	22S7034-3	A	7,8	1	Q004
	22S7034-33	M	7,8	2	Q004
	22S7034-5	A	7,8	1	Q004
	22S7035-11	M	7-59B, 8-47B	1	K305
	22S7035-3	A	7,8	2	K305
	22S7035-5	A	7,8	2	K305
	22S7036-1		7-14	1	
	22S7036-3		7	1	
	22S7037-1		7-15	1	Q005
	22S7037-3		7	1	Q005
	22S7038-1		7-45	1	Q006
	22S7038-3		7	1	Q006
	22S7039-1		7-2	1	Q007,
	22S7039-101	A1	8-2	1	Q008
	22S7040-1		7-20	1	Q009,
	22S7040-2		7-21	1	Q010
	22S7042-1		7-12	1	Q011,
	22S7042-2		7-13	1	Q012
	22S7044-1		7-65	1	
	22S7044-3		7	1	
	22S7045-1		7-60	1	
	22S7045-101		7	1	
	22S7045-102		7	1	
	22S7045-103		7	1	
	22S7045-104		7	1	
	22S7045-2		7-61	1	
	22S7045-3		7	1	
	22S7045-4		7	1	
	22S7046-1		7-58	1	
	22S7046-3		7	1	
	22S7047-1	*	7-79, 8-61	1	
	22S7047-3	M1	7	1	
	22S7050-1		7-51	1	
1AGJ	22S7050-7			1	Q013,
	22S7050-89			1	Q014
	22S7051-1		7-7	1	
1AGJ	22S7051-7			1	Q015,
	22S7051-93		8	1	Q016
	22S7051-95	M1		1	
	22S7051-97	M1		1	
	22S7064-2		15-14	1	K307
	22S7067-1		7-9	1	K309
	22S7067-2		7	1	K309
	22S7149-1		15	1	
	22S7195-3		15	1	Q018
	22S7195-401		15	1	Q018
	22S7195-5		15-13	1	Q018
	22S7196-3		15	1	Q019
	22S7196-5		15	1	Q019
	22S7197-3		15	1	Q020
	22S7197-5		15	1	Q020
	22S7198-3		15	1	Q021
	22S7198-5		15	1	Q021

AF Class Code or Stock No.	Part Number	Army Source Code	Figure and Index No.	Qty per Article	Micro-film Index
	22S7199-1		15	1	Q022
	22S8002-1	*	7-1, 17	1	
1AGJ	22S8002-10	*	17-6	1	
1AGJ	22S8002-105	P	17	1	
1AGJ	22S8002-106	*	17	1	
1AGJ	22S8002-107	*	17	1	
1AGJ	22S8002-108	*	17	1	
1AGJ	22S8002-109	P	17	1	
1AGJ	22S8002-11	*	17-8	1	
1AGJ	22S8002-110	P	17	1	
1AGJ	22S8002-111	*	17	1	
1AGJ	22S8002-113	P	17	1	
1AGJ	22S8002-114	P	17	1	
1AGJ	22S8002-115	P	17	1	
1AGJ	22S8002-117	P	17	1	
1AGJ	22S8002-119	P		1	
1AGJ	22S8002-12		17-9	1	
	22S8002-121	M	17-16	1	
	22S8002-123	M	17-17	1	
	22S8002-125	M	17-18	1	
	22S8002-126	M	17-19	1	
	22S8002-127	M	17-20	1	
	22S8002-128	M	17-21	1	
1AGJ	22S8002-13	*	17-10	1	
	22S8002-131	M1	17-24	1	
	22S8002-133	M1	17-25	1	
	22S8002-135	M1	17-26	1	
	22S8002-137	M1	17-27	1	
	22S8002-138	M	17-28	1	
	22S8002-139	M	17-29	2	
	22S8002-141	M1	17-30	1	
	22S8002-142	M1	17-31	1	
	22S8002-149	M	17	1	
1AGJ	22S8002-15	*	17-11	1	
	22S8002-151	M	17	2	
	22S8002-153	M	17	1	
	22S8002-155	M	17	2	
	22S8002-157	M	17	2	
	22S8002-159	M	17	1	
1AGJ	22S8002-16	*	17-12	1	
	22S8002-161	M	17	1	
	22S8002-163	M	17	1	
	22S8002-165	M	17	2	
	22S8002-167	M	17	2	
	22S8002-169	M	17	2	
1AGJ	22S8002-17	*	17-13	1	
	22S8002-171	M	17	2	
	22S8002-173	M	17	1	
	22S8002-175	M	17	2	
	22S8002-177	M	17	1	
	22S8002-181	M	17	AR	
1AGJ	22S8002-19	*	17-14	1	
	22S8002-20	*	17	1	
	22S8002-203	M	8-1, 17	1	
	22S8002-277	M1	17	1	
	22S8002-279	M1	17	2	
	22S8002-3	*	17	1	
	22S8002-303	A1	8-1, 17	1	
	22S8002-305	A1	17	1	
	22S8002-325	M1	17-34	1	
	22S8002-327	M1	17-32	1	
	22S8002-328	M1	17-33	1	
	22S8002-329	M1	17-22	1	
	22S8002-330	M1	17-23	1	
	22S8002-331	M1	17-35	1	
	22S8002-332	M1	17-36	1	
	22S8002-369	M1	17-37	1	
	22S8002-42	M	17	1	
1AGJ	22S8002-5	A1	16-1, 17-1	1	
	22S8002-541	*	17	AR	
1AGJ	22S8002-542	P	17	1	
	22S8002-543		17	1	
	22S8002-544		17	1	
	22S8002-545	M	17	AR	
	22S8002-546	A1	17	1	
1AGJ	22S8002-548	P	17	1	
1AGJ	22S8002-7	*	17-2	1	
1AGJ	22S8002-8	*	17-3	1	
	22S8002-827	M1	17	1	
	22S8002-828	M	17	1	
	22S8002-829	M	17	2	
	22S8002-830	M	17	1	
	22S8002-841		17	AR	
	22S8002-844		17	1	
	22S8002-87	M1	17	1	
	22S8002-88	M1	17	1	
	22S8002-89	M1	17	1	
1AGJ	22S8002-9	*	17-4	1	
	22S8003-23	M1	16	2	
	22S8003-3	M1	16-26	1	Q032,
	22S8003-5		16-27	1	Q033
	22S8003-7		16-28	1	
	22S8003-9		16	1	
	22S8004-1		17	1	
1AGJ	22S8004-10	*		1	
1AGJ	22S8004-125	P1	17-43	2	
	22S8004-13	M1	17-42	2	
	22S8004-137		17	1	
	22S8004-139	M	17	1	
1AGJ	22S8004-15	X1		1	
	22S8004-151	*	17	1	
	22S8004-152	*	17	1	
	22S8004-153	A	16,17	1	
1AGJ	22S8004-154	P1	16,17	1	
1AGJ	22S8004-16	X1		1	
	22S8004-163	M	17	1	
	22S8004-165	M	17	1	
	22S8004-166	A	17	1	
	22S8004-173		17	1	
	22S8004-179	M	17	1	
	22S8004-181		17	1	
	22S8004-183		17	1	
	22S8004-185	M	17	1	
	22S8004-187	M	17	1	
	22S8004-189	M	17	1	
1AGJ	22S8004-2		17	1	U185,
	22S8004-3		16-2, 17-38	1	U186, U187
1AGJ	22S8004-4		16-3, 17-39	1	
	22S8004-405		17	1	
	22S8004-406		17	1	
	22S8004-407		17-41	1	
	22S8004-408		17	1	
	22S8004-419		17	1	
	22S8004-420		17	1	
	22S8004-431		17	1	
	22S8004-432		17	1	
	22S8004-440		17	1	
	22S8004-441		17	1	
	22S8004-450	M	17	1	
	22S8004-451	M	17	1	
	22S8004-49	M1	17	1	
1AGJ	22S8004-5	M1	17	1	
	22S8004-50	M	17	1	
1AGJ	22S8004-6	M1	17	1	
	22S8004-83		17	1	
	22S8004-85	M	17	2	
	22S8004-87	M	17-43A	2	
1AGJ	22S8004-89	M	17	2	
1AGJ	22S8004-9	*		1	
1AGJ	22S8005-1	*	16	1	Q037
1AGJ	22S8005-22	*	16-5	1	Q037

AF Class Code or Stock No.	Part Number	Army Source Code	Figure and Index No.	Qty per Article	Micro-film Index
	22S8006-1	*	19	1	Q038
	22S8007-1		19	1	Q039
	22S8011-1		7-18, 17	2	U188
	22S8011-2		17	4	U188
	22S8011-3		17	6	U188
	22S8011-37		17	140	U188
	22S8011-39		17-47	7	U188
	22S8011-41		17	1	U188
	22S8011-43		17	1	U188
1AGJ	22S8011-47		17-44	6	U188
1AGJ	22S8012-1	P1	19-1	1	
1AGJ	22S8012-101		19	1	
1AGJ	22S8012-102	*	19	1	
1AGJ	22S8012-2	P1	19-2	1	
1AGJ	22S8012-409	P	19	1	U189,
1AGJ	22S8012-410	P	19	1	U190
	22S8012-419		19	1	
	22S8012-420		19	1	
	22S8012-55	*	19-2A	1	
	22S8012-56	*	19-2B	1	
	22S8013-1	*	7-66, 16-25, 19	1	
	22S8013-101	*	8-55, 16,19	1	
1AGJ	22S8013-103	P2	19	1	
	22S8013-104		19	1	
	22S8013-108		19	1	
1AGJ	22S8013-3		19-9	1	
	22S8014-1		18	1	T413
1AGJ	22S8015-1		18-1	1	
	22S8015-121		18	1	
	22S8015-123		18	1	
	22S8015-131		18-21	1	
	22S8015-133		18,18A	1	
	22S8015-152	M	18,18A	2	
1AGJ	22S8015-171	P	16, 18-20, 18A-44	2	
	22S8015-3	A	18-19, 18A-19	6	
	22S8015-67	M	18,18A	1	
1AGJ	22S8015-69	X1	16-4, 18,18A	2	
	22S8016-1	*	18	1	K314
1AGJ	22S8017-1	X1	18-36	1	
	22S8017-177	*	18-43	1	
	22S8017-179	M	18-44	1	
	22S8017-182	M	18A-49	1	Q043,
	22S8017-183	M	18A-50	1	Q044,
	22S8017-201	*	18A-41	1	Q045
	22S8017-7	M	18,18A	1	
	22S8017-9	M	18-40, 18A-45	1	
	22S8018-1		18	1	Q046
1AGJ	22S8018-13	P		2	Q046
	22S8018-17	M1	18,18A	2	Q046
	22S8018-19	M1	18,18A	4	Q046
	22S8018-21	M1	18,18A	2	Q046
	22S8018-3		18	1	Q046
	22S8018-401		18	1	Q046
	22S8018-402		18	1	Q046
	22S8018-403		18	1	Q046
1AGJ	22S8018-5		18-24	1	Q046
1AGJ	22S8018-7		18-26	1	Q046
1AGJ	22S8018-9		18	1	Q046
	22S8019-1		18	6	
1AGJ	22S8019-15	P1		1	
	22S8019-25	M1	18,18A	1	Q047,
	22S8019-27		18	1	Q048
	22S8019-3		18	1	
	22S8019-401		18-31	2	
	22S8019-402		18-32	1	
0116	22S8019-403		18	1	
0116	22S8019-404		18	1	
	22S8019-405		18	1	Q047,
1AGJ	22S8019-5		18-45	1	Q048
	22S8019-51	M1	18,18A	1	
1AGJ	22S8019-7		18-47	1	
	22S8019-9		18,19	1	
	22S8020-11	A	16	1	
1AGJ	22S8020-12	P	16	1	
1AGJ	22S8020-201	P	16	1	
	22S8020-203		16	1	
	22S8020-205		16	1	
1AGJ	22S8020-3	*	16-11	1	
1AGJ	22S8020-408	P	16	1	
1AGJ	22S8020-5	*	16-12	1	
1AGJ	22S8020-7	A1	16-13	1	
1AGJ	22S8020-9	P	16	1	
	22S8021-1	*	16	1	
1AGJ	22S8021-101	P	16-44	2	
1AGJ	22S8021-103	P	16-45	2	
1AGJ	22S8021-7	*	16	1	
1AGJ	22S8021-9	*	16	1	
	22S8022-21	M	16-40	9	
	22S8022-23		16-41	1	Q049,
	22S8022-25		16-42	1	Q050
	22S8025-1	M	16	10	H238
1AGJ	22S8026-5			1	Q051
	22S8027-1		7,16	1	
	22S8027-101	*	8	1	
1AGJ	22S8027-103	*	8,16	1	
	22S8027-107	A	8,16	1	
	22S8027-109	M	16	1	
	22S8027-11	M1	7-81, 8-69	2	
	22S8027-124		16	1	
	22S8027-125	*	16	1	
1AGJ	22S8027-126	P	16	1	
	22S8027-13	M1	7-82, 8-70	1	
	22S8027-21	*	16-47	1	
1AGJ	22S8027-27	P	16-48	1	
1AGJ	22S8027-3		7, 16-46	1	
1AGJ	22S8027-35	X2		1	
	22S8027-7	M1	7-79, 8-67	1	
	22S8027-9	M1	7-80, 8-68	1	
	22S8030-10		16	1	Q052
	22S8030-11	M1	16-10	1	Q052
	22S8030-12		16	1	Q052
	22S8030-411		16	1	Q052
	22S8030-412	M1	16	1	Q052
	22S8030-413		16	1	Q052
	22S8030-414	M1	16	1	Q052
	22S8030-9	M1	16-9	1	Q052
1AGJ	22S8031-1	P		1	D445
	22S8032-1			1	Q053
	22S8032-3	M1	16-20	1	Q053
1AGJ	22S8037-1	P1	17-15	1	K315
	22S8037-2	*	17	1	K315
1AGJ	22S8037-3	*		1	K315
1AGJ	22S8044-1	P	16-6	1	K317
1AGJ	22S8044-103	*	16	1	K317
1AGJ	22S8044-2	P	16	1	K317
1AGJ	22S8044-30	P	16-7	1	K317
1AGJ	22S8063-1	P1		1	Q055
1AGJ	22S8065-1	P	16-53	2	K318
1AGJ	22S8066-1	P1	16-17	1	K319
1AGJ	22S8067-1	P1	16-18	1	K320
1AGJ	22S8069-1	P1	18-41, 18A-46	1	K321
1AGJ	22S8072-1			1	K322
	22S8072-2	M1		1	K322

AF Class Code or Stock No.	Part Number	Army Source Code	Figure and Index No.	Qty per Article	Micro-film Index
	22S8077-1		18-33	2	T414
1AGJ	22S8077-3	P1	18-55, 18A-38	4	T414
	22S8078-1		18-28	1	K323
	22S8079-1	M1	18,18A	4	K324
	22S8079-3	P1	18-30, 18A-35	1	K324
	22S8079-4		16-52	1	K324
	22S8079-5	P1	18-29, 18A-34	1	K324
1AGJ	22S8081-1	*	18	2	F342
1AGJ	22S8082-1	P1		3	K325
1AGJ	22S8082-3	P1		1	K325
1AGJ	22S8082-5	P1		6	K325
1AGJ	22S8082-6	P1		5	K325
1AGJ	22S8082-7	P1		6	K325
1AGJ	22S8083-1		18-25	9	K326
1AGJ	22S8083-3	P1	18-27, 18A	4	K326
1AGJ	22S8087-1			1	
1AGJ	22S8087-2			1	
	22S8095-1		18-50	1	K328
1AGJ	22S8096-1	P1		2	K329
1AGJ	22S8096-3	P1		1	K329
	22S8096-5		18-51	1	K329
1AGJ	22S8096-7	*		1	K329
1AGJ	22S8097-1	P1	18-48	2	K330
1AGJ	22S8097-3	P1	18-49	1	K330
	22S8098-1			72	D449
	22S8098-7			1	D449
1AGJ	22S8099-1	P1		1	H247
1AGJ	22S8099-2	P1		1	H247
	22S8105-1		18	1	H248
	22S8141-1	M	17	2	D454
	22S8141-2		17	1	D454
1AGJ	22S8142-1	P1	17	1	D455
	22S8142-2		17	1	D455
	22S8145-1		16-31, 19-14	1	Q064
	22S8145-101		19	1	Q064
	22S8145-3	X1	19-17	1	Q064
	22S8145-5	X1	19-18	1	Q064
	22S8146-1		16-32, 19-15	1	Q065
	22S8146-101		19	1	Q065
1AGJ	22S8148-1	P	19-24	1	H250
	22S8148-3	X1		1	H250
	22S8148-4		19	1	H250
1AGJ	22S8149-1	P	19-27	1	H251
	22S8149-3	X1		1	H251
	22S8149-401		19	1	H251
	22S8150-1	M1		2	H252
	22S8150-3	M1		2	H252
	22S8150-5		19-22	2	H252
1AGJ	22S8151-1	P1	19	1	K331
1AGJ	22S8151-2	P1	19-19	1	K331
	22S8151-3		19-20	1	K331
	22S8151-4	X1	19	1	K331
1AGJ	22S8152-5	P	19-30	1	F346
1AGJ	22S8153-3	P	19-31	2	F347
	22S8154-3			2	H253
	22S8154-4		19-34	2	H253
	22S8155-3	A	19-28	2	K332
	22S8156-1		19-38	1	H254
	22S8156-2		19	1	H254
	22S8156-402		19	1	H254
1AGJ	22S8158-1	*		1	H255
1AGJ	22S8158-2	*		1	H255
	22S8158-3	X1		2	H255
	22S8158-5	X1		2	H255
	22S8159-1	M		1	H256
	22S8159-3	M		1	H256
	22S8159-5	M		1	H256
	22S8162-1			1	
	22S8162-3			1	
	22S8163-1		16-14	1	Q066
	22S8164-1		16	1	Q067
	22S8164-2		16	1	Q067
	22S8164-31	M1	16	4	Q067
	22S8164-33	M1	16	2	Q067
	22S8164-35	*	16	1	Q067
	22S8164-36	*	16	1	Q067
	22S8165-1	*	16	1	K333
1AGJ	22S8165-3	M	16-43	1	K333
	22S8166-1	*	16	1	K334
1AGJ	22S8166-3	M1	16	1	K334
	22S8176-1	M	16-21	1	K335
	22S8176-2	M	16-22	1	K335
	22S8189-1		17-37	1	
	22S8192-1		19	1	F350
1AGJ	22S8207-1	P	17	1	
1AGJ	22S8207-2	P	17-40	1	
	22T0001-1	*	6	1	K510
	22T1001-1	*	6	2	R102
1AGJ	22T1001-10	M1	6-26	4	R102
1AGJ	22T1001-2	P1	6-21	2	R102
1AGJ	22T1001-20	P	6-27	2	R102
	22T1001-21	M		2	R102
	22T1001-23	M1		4	R102
	22T1001-3	M1		2	R102
	22T1001-4	M1		8	R102
	22T1001-5	M1		4	R102
	22T1001-6	M1		4	R102
	22T1001-7	M1		4	R102
	22T1001-8	M1		2	R102
	22T1001-9	M1		2	R102
	22T1051-1	M1	6	2	K511
	22T1051-2		6-28	2	K511
	22T1052-2	M	6-24	2	T151
	22T1054-1	M1		20	K512
	22T1054-2	M1		2	K512
	22T1054-3	M1		16	K512
	22T1054-4	M1		4	K512
	22T1054-5	M1		4	K512
	22T1054-6	M1		2	K512
	22T1058-1	M1	6	2	K513
1AGJ	22T1058-2	P1	6-29	2	K513
	22T3001-1	*	6	2	R103
1AGJ	22T3001-102	*	6	2	R103
1AGJ	22T3001-103	*	6	2	R103
1AGJ	22T3001-104	P1	6-1	2	R103
	22T3001-11	M1	6	2	R103
	22T3001-12	M	6	4	R103
	22T3001-13	M	6	2	R103
	22T3001-14	M	6	2	R103
	22T3001-15	M	6	2	R103
	22T3001-16	M	6	2	R103
	22T3001-17	M	6	4	R103
	22T3001-18	M	6	2	R103
	22T3001-2	M1	6	2	R103
	22T3001-23	M1	6	4	R103
	22T3001-24	M1	6	4	R103
	22T3001-25	M1		4	R103
	22T3001-3	M1		2	R103
	22T3001-4	M1		2	R103
	22T3001-5	M1		2	R103
	22T3001-6	M1		2	R103
	22T3001-7	M1		4	R103
	22T3002-1	M1	6	2	R104
1AGJ	22T3002-13	A1	6	2	R104
	22T3003-1	*	6A-1	1	R105, R106
	22T3003-11	M1		1	
	22T3003-12	M1		1	
	22T3003-13	M1		1	

AF Class Code or Stock No.	Part Number	Army Source Code	Figure and Index No.	Qty per Article	Micro-film Index
	22T3003-14	M1		1	
	22T3003-17	M1		1	
	22T3003-18	M1		1	
	22T3003-19	M1		1	
	22T3003-20	M1		1	
	22T3003-23	M1		1	
	22T3003-24	M1		1	R105,
	22T3003-3	A1		1	R106
	22T3003-4	A1		1	
	22T3003-47	M	6A	2	
	22T3003-48	M	6A	2	
	22T3003-5	A1		1	
	22T3003-6	A1		1	
	22T3003-7	M1		1	
	22T3003-8	M1		1	
	22T3004-1	A1	6A	1	K514
	22T3004-2	M1		1	K514
	22T3005-1	A1	6A	1	R107
	22T3006-1	A1	6	2	K515
	22T3006-2	M1		2	K515
1AGJ	22T3052-1	P1	6	2	K516
1AGJ	22T3052-2	P1	6	2	K516
1AGJ	22T3052-3	*	6	2	K516
1AGJ	22T3052-4	*	6	2	K516
	22T3056-1	*		1	K518
	22T3056-2	*		1	K518
	22T3057-1			2	H381
	22T3057-2			1	H381
	22T3058-1	M1		1	R108
	22T3058-2	M1		1	R108
	22T3058-3	M1		1	R108
	22T3058-4	M1		1	R108
	22T3058-5	M1		1	R108
	22T3058-6	M1		1	R108
	22T3058-7	M1		1	R108
	22T3058-8	M1		1	R108
	22T3060-1	X2		2	K519
	22T3060-2	X2		2	K519
	22T3060-3	X2		2	K519
	22T3060-4	X2		2	K519
	22T3060-5	X2		2	K519
	22T3060-6	X2		2	K519
	22T3066-1	M1		2	K520
	22T3067-1	M1		2	K521
	22T3068-1	M1		2	R109
	22T3068-2	M1		2	R109
	22T3071-2		6	2	K522
1AGJ	22T3071-3	P1	6-19	2	K522
1AGJ	22T3072-1	P	6-25	2	E074
1AGJ	22T3074-1	P1	6-4	2	K523
1AGJ	22T3074-2	P1	6	2	K523
	22T3075-1		6A	1	K524
	22T3075-2		6A	1	K524
1AGJ	22T3075-3	P1	6A-1A	1	K524
1AGJ	22T3075-4	P1	6A	1	K524
	22T3076-1		6A	1	K525
	22T3076-2		6A	1	K525
1AGJ	22T3076-3	P1	6A-6	1	K525
1AGJ	22T3076-4	P1	6A	1	K525
1AGJ	22T3077-1	P	6-13	2	
	22T3078-1	*	6A	1	K526
	22T3078-2	*	6,6A	1	K526
1AGJ	22T3078-3	P1	6-19, 6A-11	1	K526
1AGJ	22T3078-4	P1	6A	1	K526
	22T3252-2			1	
	3C1621-1		54-13	1	E075
	2C1621-2		54-20	3	E075
	3C1621-3		52-71	2	E075
	3C1712		52-5	4	E076
	3C2138-2	P	57-34	1	H388
	3C2138-7		64A-4, 65-16	20	H388
	3C2138-8	P	57-70	4	H388
	3C2138-9	P	57-19	3	H388
	3R1127		3	12	D423
	42C001-1	*	50	1	L110
	42C1001-1	*	50,64	1	L111
	42C1002-1	*	50,51	1	U6
	42C1004-1		66	1	U8
	42C1014-1	*	51,56	1	L113
1AGJ	42C1014-100	P1	56,56A	1	L113
1AGJ	42C1014-2	*	56	1	L113
	42C1014-3	*	56	1	L113
	42C1014-4	*	56,56A	1	L113
	42C1014-5	A	56	1	L113
	42C1015-5	*	57	1	U9
1AGJ	42C1015-6	*	57	1	U9
	42C1015-7	*	57	1	U9
	42C1015-8	*	57	1	U9
	42C1025-1	*	51,62	1	L115
	42C1112-1		52	1	H489
1AGJ	42C1136-1	P2	52	1	G180
	42C1136-2	X1	52-65	1	G180
	42C1136-5		52	1	G180
	42C1136-6		52	1	G180
1AGJ	42C1141-1	P	52-13	3	E214
1AGJ	42C1143-11	P2	52-49	1	L117
1AGJ	42C1143-12	P2	52-50	1	L117
1AGJ	42C1143-13	P2	52-15	1	L117
1AGJ	42C1143-14	P2	52-16	1	L117
1AGJ	42C1144-13	P	52-25	2	G181
1AGJ	42C1144-4	P	52-50C	2	G181
1AGJ	42C1148-1	P1	53-43	1	E216
1AGJ	42C1149-1	P	52	4	G182
	42C1151-1		53	AR	E217
	42C1153-1	P	53-1C	1	
	42C1154-1	M	53-1A	1	G183
1AGJ	42C1201-1	*	54	2	H493
	42C1201-2	*	54	2	H493
1AGJ	42C1201-5	P1	54	1	H493
	42C1201-6	X1	54	1	H493
1AGJ	42C1202-2	X1		1	G184
	42C1230-1		55-29	1	
	42C1254-1		56	1	U10
	42C1254-2		56	1	U10
1AGJ	42C1254-3	*	56	1	U10
	42C1254-4	X1	56	1	U10
1AGJ	42C1256-1	*	56	1	
	42C1256-2	X1	56	1	L121,
	42C1256-3	X1	56	1	L122
	42C1256-4	X1	56-74, 56A	1	
1AGJ	42C1257-1	*	56	2	H495,
	42C1257-2	X1	56	2	H496,
1AGJ	42C1257-3	P2	56-75	2	H497,
	42C1257-4	X1	56-82	2	H498
	42C1260-4		56-96	1	
	42C1291-2	M	56	2	G185
	42C1291-5	M		2	G185
	42C1291-6	M	56	2	G185
	42C1291-7	M	56	1	G185
	42C1292-1	P	56-89	1	E218
	42C1292-2	P	56	1	E218
	42C1294-1	*	62-18	1	E219
1AGJ	42C1296-1	P2	56	1	U12
	42C1296-2	X1	56-88	1	U12
	42C1297-1	*	62	1	E220
1AGJ	42C1298-1	P	55-45	2	G186
1AGJ	42C1335-1	P2	57	1	H502
	42C1335-2	X1		1	H502
	42C1335-3	X1		1	H502
	42C1335-4	X1		2	H502
	42C1335-5	X1		1	H502
1AGJ	42C1352-1	P2	58-13A	1	H503
1AGJ	42C1353-1	P	58-13C	2	E221
1AGJ	42C1356-4	P1	58	1	G187
1AGJ	42C1356-6	P1	58-13F	1	G187

AF Class Code or Stock No.	Part Number	Army Source Code	Figure and Index No.	Qty per Article	Micro-film Index
1AGJ	42C1358-1	P1	58-28	1	E222
1AGJ	42C1360-1	P	58	1	G188
1AGJ	42C1360-2	P	58-45	1	G188
1AGJ	42C1364-1	A	69-9	1	G189
	42C1366-1		63-15	1	E223
1AGJ	42C1367-1	P	58-56	2	E224
1AGJ	42C1600-1	*	62	1	
	42C1600-2	X1	62	1	
1AGJ	42C1600-3	*	62	1	
	42C1600-4	X1	62	1	
1AGJ	42C1600-5	P2	62-2	1	
	42C1600-6	X1	62	1	
1AGJ	42C1622-1	P	55-24, 56-25	10	G190
1AGJ	42C1622-2	P	64A-6, 65-18	12	G190
1AGJ	42C1622-3	P	55-82	2	G190
1AGJ	42C1622-5	P	62-10	4	G190
1AGJ	42C1622-6	P	62	2	G190
1AGJ	42C1622-7	P	62	2	G190
	42C1623-1	M	63	1	
	42C1624-1	*	62	2	E225
	42C1631-1	X1	64	1	E226
	42C1655-1		65-11	2	E228
	42C1655-2		65-12	4	E228
	42C1655-3		65-13	2	E228
	42C1671-1		65,66B	4	T261
	42C1672-1		66B	1	
	42C1672-2		65	1	U13,
	42C1672-3		66B	1	U14
	42C1672-4		65	1	
	42C1673-1		66B	1	
	42C1673-2		65	1	U15,
	42C1673-3		66B	1	U16
	42C1673-4		65	1	
	42C1770-1		66B	1	U22
	42C1780-1		66B	1	
	42C1780-2		65	1	U23,
	42C1780-3		66B	1	U24
	42C1780-4		65	1	
	42C1781-1		66B	1	U25,
	42C1781-2		66B	1	U26
	42C1782-1		65	1	U27,
	42C1782-2		65	1	U28
	42C1784-1		65	1	U29
	42C1786-1		66B	1	U30
1AGJ	42C1787-1		11	3	T264, T265
	42C1794-2		11	1	
	42C2001-1	*	71	1	R139, L100
	42C2112-1	M	57	1	
1AGJ	42C2113-2	P	57	1	E231
1AGJ	42C2300-1	*	71,73	1	L128
	42C2307-2	X1	73	1	T269
1AGJ	42C2307-3	*	73	1	T269
	42C2307-4	X1	73	1	T269
	42C2307-5	*	73	1	T269
1AGJ	42C2307-7	*	73	1	T269
1AGJ	42C2307-9	P1	73	1	T269
1AGJ	42C2308-1	*	73	1	T270
	42C2308-2	X1	73	1	T270
1AGJ	42C2308-3	*	73	1	T270
	42C2308-4	X1	73	1	T270
1AGJ	42C2308-5	P1	73	1	T270
	42C2315-1	X1	73	1	E232
1AGJ	42C2328-1	P	73	1	E233
1AGJ	42C2332-1	P1		1	
	42C3001-1	*		1	G193
	42C4001-1	*	51,63	1	L130
	42D0001-1	*	40	1	U50
1AGJ	42D0001-50	P	41	2	U50
1AGJ	42D1001-10	*	41	1	U51,
1AGJ	42D1001-13	*	41	1	U52,
1AGJ	42D1001-18	*	41	1	U53

AF Class Code or Stock No.	Part Number	Army Source Code	Figure and Index No.	Qty per Article	Micro-film Index
1AGJ	42D1001-20	*	41	1	U51,
1AGJ	42D1001-21	*	41	1	U52,
1AGJ	42D1001-22	*	41	1	U53
1AGJ	42D1067-1	P	41-14	2	E354
1AGJ	42D1068-1	P	41-7	2	E355
1AGJ	42D1069-1	P	41-6	2	E356
1AGJ	42D1070-1	P1	41-10	1	E357
1AGJ	42D1071-1	P1	41-8	1	E358
1AGJ	42D1072-1	P	41-4	1	E359
1AGJ	42D1073-1	P	41-5	1	E360
1AGJ	42D1090-1		41-2A	1	G308
1AGJ	42D1096-1	P1	41-9	1	G309
	42D2001-1	*	42	1	L195
1AGJ	42D2001-2	*	43	1	L195
1AGJ	42D2001-3	P1	42	1	L195
1AGJ	42D2001-4	*	43	1	L195
1AGJ	42D2001-6	P1	43	1	L195
	42D2001-7		42	1	L195
	42D2001-8		43	1	L195
1AGJ	42D2059-1	P	43	2	E365
	42D3001-2	A	40,45	1	L199
1AGJ	42D3043-1	P	44-31	8	E367
	42D3053-1		34	1	J050,
1AGJ	42D3053-2	*	34	1	J051,
1AGJ	42D3053-3	P1	34-1	1	J052
1AGJ	42D3055-1	X1	45	2	T225
1AGJ	42D3056-1	P1	45-6	1	L201
1AGJ	42D3056-2	X1	45	1	L201
1AGJ	42D3060-1	P	34-6	1	D326
1AGJ	42D3062-1	P1	44	2	G318
1AGJ	42D4040-1	P	49-13C	1	E368
	42E0001-1		74	1	M131
	42E1050-1		81	1	M132
	42E1050-10	A	81	1	M132
	42E1050-2	*	81	1	M132
	42E1050-3		81	1	M132
	42E1050-4	A	81	1	M132
	42E1050-5	*	81	1	M132
	42E1050-6	A	81	1	M132
	42E1050-7		81	1	M132
	22E1050-8		81	1	M132
	42E1050-9	*	81	1	M132
	42E1053-1	M		3	
	42E1053-2	M		3	
	42E1054-1	M	81-1	1	E459
	42E1055-1	A	81-4	1	E460
	42E1055-2	A	81-3	1	E460
	42E1080-1	*	83	1	
	42E1080-10	M		1	
	42E1080-12	M		16	
	42E1080-13	M	83-32	1	
	42E1080-14	M	83-31	1	
	42E1080-3	M	83-24	1	M133, J285
	42E1080-4	M	83-23	1	
	42E1080-5	M	83-27	1	
	42E1080-6	M	83-26	1	
	42E1080-7	M		1	
	42E1080-8	M		1	
	42E1080-9	M		1	
	42E1081-1	*	84	1	
	42E1081-10	M		1	
	42E1081-11	M		1	
	42E1081-12	M		1	
	42E1081-13	M		1	
	42E1081-14	M		1	
	42E1081-15	M		1	
	42E1081-16	M1		1	M134, J286
	42E1081-17	M	84	1	
	42E1081-18	M	84	1	
	42E1081-2	M	84	1	
	42E1081-20	M	84	1	
	42E1081-22	M	84	1	
	42E1081-24	M1	84	1	

AF Class Code or Stock No.	Part Number	Army Source Code	Figure and Index No.	Qty per Article	Micro-film Index
	42E1081-26	M	84	1	
	42E1081-28	*	84	1	
	42E1081-29		84	1	
	42E1081-3	M	84	1	
	42E1081-30		84	1	
	42E1081-33		84	1	M134,
	42E1081-4	M	84	1	J286
	42E1081-5	M	84	1	
	42E1081-6	M	84	1	
	42E1081-7	M	84	1	
	42E1081-8	M1	84	1	
	42E1081-9	M		1	
	42E1089-1	A	82	1	U76
	42E1089-2	M		1	U76
	42E1089-3	M		1	U76
	42E1089-4	*	82	1	U76
	42E1089-5	*	82	1	U76
	42E1089-6	*	82	1	U76
	42E1089-7		82	1	U76
	42E1090-1	*	80,81	3	M136
	42E1090-2	*	80,81	2	M136
	42E1090-3	M1	80-55, 81-48	2	M136
	42E1090-4	M1	81-48, 80-56	2	M136
	42E1090-5	M1		1	M136
	42E1090-6	M1		1	M136
	42E1091-1	*	82-55	1	
	42E1091-10	X2	82	1	
	42E1091-2	*		1	
	42E1091-3	X2		1	
	42E1091-4	X2		1	U77,
	42E1091-5	X1		1	T291
	42E1091-6	X1		1	
	42E1091-7	X2		1	
	42E1091-8	A	82-40	1	
	42E1091-9	M		1	
	42E1093-3			1	
	42E1094-1	*	86A	1	U78
	42E1095-1	M1		1	G419
	42E1095-2	M1		1	G419
	42E1096-1	M	83-28	1	D349
	42E1100-1		80	1	M139
	42E1100-10	X1		1	M139
	42E1100-11	X1		1	M139
	42E1100-12	X1		1	M139
	42E1100-13	X1		1	M139
	42E1100-14	X1		3	M139
	42E1100-15	X1		3	M139
	42E1100-16	M1		1	M139
	42E1100-17	M		2	M139
	42E1100-18	M		2	M139
	42E1100-19	X1		2	M139
	42E1100-2	*	81	1	M139
	42E1100-20	X1		2	M139
	42E1100-21	M1		2	M139
	42E1100-22	M		2	M139
	42E1100-24			1	M139
	42E1100-25			1	M139
	42E1100-26	*	81	1	M139
	42E1100-27	X2	81	1	M139
	42E1100-28		81	1	M139
	42E1100-29		81	1	M139
	42E1100-3		80-57	1	M139
	42E1100-30	*	81	1	M139
	42E1100-31	X2	81	1	M139
	42E1100-32	M	81	1	M139
	42E1100-33	M	81	1	M139
	42E1100-34	M	81	1	M139
	42E1100-35	M	81	1	M139
	42E1100-36		81	1	M139
	42E1100-4	X2	81-50	1	M139
	42E1100-5	X2		1	M139
	42E1100-6	X1		2	M139

AF Class Code or Stock No.	Part Number	Army Source Code	Figure and Index No.	Qty per Article	Micro-film Index
	42E1100-7	X1		1	M139
	42E1100-8	X1		1	M139
	42E1100-9	X1		1	M139
	42E1102-1	M1		1	J288
	42E1102-2	M1		1	J288
	42E1102-3	M		1	J288
	42E1102-4	M		1	J288
	42E1102-5	M1		1	J288
	42E1102-6	M		1	J288
	42E1102-7	M1		1	J288
	42E1102-8	M1		1	J288
	42E1103-1		81	1	
	42E1103-10	M	81-47	1	
	42E1103-2	*	82	1	M140,
	42E1103-5	*	81	1	M141
	42E1103-7	*	81	1	
	42E1103-8		81	1	
	42E1103-9	*	81	1	
	42E1104-10	M1		1	
	42E1104-11	M1		1	
	42E1104-2	M1		1	
	42E1104-3	M1		1	
	42E1104-4	M1		1	J289,
	42E1104-5	M1		1	J290
	42E1104-6	M1		1	
	42E1104-7	M1		1	
	42E1104-8	M1		1	
	42E1104-9	M1		1	
	42E1105-1	M1		1	M142
	42E1106-1	M1		1	M143
	42E1107-1	A		1	M144
	42E1107-2	M1		1	M144
	42E1107-3	M1		1	M144
	42E1107-4	M		1	M144
	42E1107-5	M		1	M144
	42E1107-6	M		1	M144
	42E1107-7	M1		1	M144
	42E1107-8	M		1	M144
	42E1107-9	M1		1	M144
	42E1108-1	*	86A	1	J291
	42E1108-2	M1	86A-23	1	J291
	42E1108-3	M1	86A-24	1	J291
	42E1108-4	M1		1	J291
	42E1108-5	M1		1	J291
	42E1108-6	M1		1	J291
	42E1108-7	M1		1	J291
	42E1140-1	*	86A	1	M145, M146
	42E1141-1	*	86A	1	M147
	42E1142-1	*	86A	1	M148
	42E1142-2	*	86A	1	M148
	42E1146-1	*		1	M149
	42E1146-2	M1		1	M149
1AGJ	42E1148-1	P1	86A	1	J292
	42E1149-1	M1	86A	2	G420
	42E1149-2	M1	86A	2	G420
	42E1152-1	A	86A-2	1	J293
	42E1152-10	A		1	J293
	42E1152-11	A		1	J293
	42E1152-12	A		1	J293
	42E1152-13	M		1	J293
	42E1152-14	M		1	J293
	42E1152-15	M		1	J293
	42E1152-16	M		1	J293
	42E1152-17	M		1	J293
	42E1152-18	M		1	J293
	42E1152-19	M		1	J293
	42E1152-2	A	86A-8	1	J293
	42E1152-20	M		1	J293
	42E1152-21	M		1	J293
	42E1152-3	A	86A-15	1	J293
	42E1152-4	A	86A-3	1	J293
	42E1152-5	A	86A-7	1	J293

AF Class Code or Stock No.	Part Number	Army Source Code	Figure and Index No.	Qty per Article	Micro-film Index
	42E1152-6	A	86A-14	1	J293
	42E1152-7	A		1	J293
	42E1152-8	A		1	J293
	42E1152-9	A		1	J293
	42E1154-1	M1	86A	1	G421
1AGJ	42E1156-1	P1	86A	1	J295
	42E1162-1	*	74	1	
	42E1162-10	M		1	
	42E1162-11	M		1	
	42E1162-16	*	74	1	
	42E1162-17	A	74	1	
	42E1162-18		74	1	
	42E1162-19		74	1	
	42E1162-2	A	74-8	1	
	42E1162-23		74	1	
	42E1162-3	A		1	
	42E1162-4	A		1	
	42E1162-5	A		1	
	42E1162-6	M		1	
	42E1162-7	M1		1	
	42E1162-8	*		1	
	42E1162-9	M		1	
	42E1163-1	A	82B-26	1	
	42E1170-1		81	1	
	42E1170-2	A	81	1	
	42E1170-3	A	81	1	
	42E1170-4	A	81	1	
	42E1170-5	A	81	1	
	42E1170-70	X2	81	1	
	42E1172-1	A	82B	1	M151, M152
	42E1173-1		81	1	U79
	42E1173-2	X2	81	1	U79
	42E1173-3	X1	81	1	U79
	42E1175-1		81	1	U80
	42E1175-10		81	1	U80
	42E1175-16		81	1	U80
	42E1175-2	*	81	1	U80
	42E1175-3		81	1	U80
	42E1175-4	X2	81	1	U80
	42E1175-5		81	1	U80
	42E1175-6		81	1	U80
	42E1175-9		81	1	U80
	42E1176-20		84-8A	1	
	42E1176-22		83-20A	1	
	42E1176-24		83-21A	1	
	42E1176-26		83-21C	1	
	42E1176-28		83-21B	1	
	42E1176-30		84-8B	1	U81,
	42E1176-32		84-8C	1	T294,
	42E1176-34		83-24A	1	U82
	42E1176-36		83-23A	1	
	42E1176-38		83-24C	1	
	42E1176-40		84-8D	1	
	42E1176-42		83-24D	1	
	42E1176-44		83	1	
1AGJ	42E1186-1	P	74	1	D350
	42E1189-1	M1	74-14	1	M157
	42E1190-1	*	81	1	M158
	42E1190-10	M1		1	M158
	42E1190-11	M		1	M158
	42E1190-12	M		1	M158
	42E1190-13	M		1	M158
	42E1190-14		80	1	M158
	42E1190-15		80-52	1	M158
	42E1190-17	M		1	M158
	42E1190-18	M		4	M158
	42E1190-19	M		3	M158
	42E1190-2	X2	81-44	1	M158
	42E1190-3	M1		1	M158
	42E1190-4	M1		1	M158
	42E1190-5	M		1	M158
	42E1190-6	M		1	M158
	42E1190-7	M1		1	M158

AF Class Code or Stock No.	Part Number	Army Source Code	Figure and Index No.	Qty per Article	Micro-film Index
	42E1190-8	M1		1	M158
	42E1190-9	M1		1	M158
	42E1191-1	A		1	M159
	42E1191-2	M1		1	M159
	42E1191-3	M		1	M159
	42E1192-1	P		1	G424
1AGJ	42E1193-1	X2		1	J300
	42E1200-1	*	86A	1	J302
	42E1200-2	A	86A	1	J302
	42E1201-1		21	4	E463
	42E1203-1	*	86A	1	G425
	42E1208-1		82B-20	1	
	42E1213-1	*	82B	1	U83
	42E1213-2		82A	1	U83
	42E1225-1		82B	1	G426
	42E2000-1	*	77	1	M161
	42E2010-1	*	77	1	J338
	42E2010-2	*	77	1	J338
	42E2010-3	*	77	1	J338
	42E2011-1	A	77	1	
	42E2011-2	M		1	M166,
	42E2011-4	A	77	1	M167
	42E2011-5		77	1	
	42E2013-1	*	77	1	J339
	42E2017-1		77	1	J340
	42E2018-1	*		1	G427
	42E2019-1	*	77	1	U88
	42E2020-1	*	77	1	M169
	42E2024-1	*	77	1	G428
	42E2024-2	*	77	1	G428
	42E2026-1	*		1	U89
	42E2030-1	A	77	1	U90
	42E2030-2	A	77	1	U90
	42E2030-4		77	2	U90
	42E2038-1		81	1	M171
	42E2038-14		81	1	M171
	42E2038-2		81	1	M171
	42E2038-5		81	1	M171
	42E2038-6	*		1	M171
	42E2038-7		81	1	M171
	42E2039-1	M	81-8	1	T327
	42E2039-2	M		1	T327
	42E2039-4	M		1	T327
	42E2040-1	*	78	1	U91
	42E2040-3	*	78	1	U91
	42E2040-4		78	1	U91
	42E2040-5		78A	1	U91
	42E2040-6	*	78B	1	U91
	42E2040-8		78C	1	U91
	42E2041-1	A1	81	1	T328
	42E2041-2		81	1	T328
	42E2042-1	P	81-5	1	T329
	42E2046-1	A	78	1	G430
	42E2046-2	A		1	G430
	42E2046-3	A		1	G430
	42E2047-1	*		1	J341
	42E2049-1	M		2	U92
	42E2049-10	M		1	U92
	42E2049-12	M		1	U92
	42E2049-13	M1		2	U92
	42E2049-14	M1		1	U92
	42E2049-15	M1		1	U92
	42E2049-16	M1		2	U92
	42E2049-17	M		1	U92
	42E2049-18	M1		1	U92
	42E2049-19	M		1	U92
	42E2049-2	M1		1	U92
	42E2049-20	M		1	U92
	42E2049-21	M1		1	U92
	42E2049-22	M1		1	U92
	42E2049-3	M		2	U92
	42E2049-5	M		1	U92
	42E2049-6	M		6	U92
	42E2049-7	M		2	U92

AF Class Code or Stock No.	Part Number	Army Source Code	Figure and Index No.	Qty per Article	Micro-film Index
	42E2049-8	M		18	U92
	42E2049-9	M		1	U92
	42E2053-10	M1		2	J342,
	42E2053-4	M1		1	J343,
	42E2053-8	M1		1	J344
	42E2060-1	P	78-47	1	M175
	42E2060-11		78B-18	1	M175
	42E2060-2	P	78-51	1	M175
	42E2060-3	P	78-55	1	M175
	42E2060-4	P	78-64	1	M175
	42E2060-5	P	78-69	1	M175
	42E2060-6	P	78-75	1	M175
	42E2060-7		78-59	1	M175
	42E2060-8	A	78-32	1	M175
	42E2060-9		78B-36	1	M175
	42E2062-1	M1	78-33	1	G431
	42E2066-1	A		1	M176,
	42E2066-2	M1		1	M177
	42E2067-1	A		1	M178
	42E2067-10	M		2	M178
	42E2067-11	M		1	M178
	22E2067-12	M1		1	M178
	42E2067-2	M1		1	M178
	42E2067-3	M1		1	M178
	42E2067-4	M1		1	M178
	42E2067-5	M1		1	M178
	42E2067-6	M1		1	M178
	42E2067-7	M1		1	M178
	42E2067-8	M1		1	M178
	42E2067-9	M1		1	M178
	42E2069-1	M1	78	1	J346
	42E2070-1	A	78	1	J347
	42E2070-2	A		1	J347
	42E2070-3	A		1	J347
	42E2071-1	A	78	1	J348
	42E2071-2	A		1	J348
	42E2071-3	M1		1	J348
	42E2072-1	A	78	1	M179
	42E2072-10		78A	1	M179
	42E2072-2	A		1	M179
	42E2072-3		78-30	1	M179
	42E2072-5		78	1	M179
	42E2072-8		78	1	M179
	42E2072-9	A	78	1	M179
	42E2073-1	A	78	1	G432
	42E2073-2	M1		1	G432
	42E2074-2	*	77	1	T331
	22E2074-3	*	77	1	T331
	42E2074-5	*	77	1	T331
	42E2076-1	*	77-6	1	J350
1AGJ	42E2077-1	P	81-41	1	T332
1AGJ	42E2077-2	P	81	1	T332
1AGJ	42E2077-3	P	81	1	T332
	42E2077-4		81	1	T332
	42E2078-1	A	81	1	J351
	42E2078-2	A	81	1	J351
	42E2078-3	A	81	1	J351
	42E2078-4	A	81	1	J351
	42E2078-5	A	81	1	J351
	42E2078-6	A	81	1	J351
	42E2078-7	A	81	1	J351
	42E2078-8		81	1	J351
	42E2079-1	M1	81	1	J352
	42E2083-1	*	77	1	M180
	42E2083-10	A		1	M180
	42E2083-3	A	77	1	M180
	42E2083-4	M1		1	M180
	42E2083-5	M1		1	M180
	42E2083-6		77-7A	1	M180
	42E2083-9		77	1	M180
	42E2092-1	A	78	1	J353
	42E2092-2	A		1	J353
	42E2092-3	A		1	J353
	42E2093-1	M1	78	1	J354

AF Class Code or Stock No.	Part Number	Army Source Code	Figure and Index No.	Qty per Article	Micro-film Index
	42E2097-1	A	77	1	G433
	42E2099-1		81	1	J355
	42E2100-1		81	1	M181
	42E2100-4	M	81	1	M181
	42E2100-5	M	81	1	M181
	42E2100-6		81	1	M181
	42E2101-1	A	81-21	1	J356
	42E2101-2	A		1	J356
	42E2101-3	A	81	1	J356
	42E2101-5		81	1	J356
	42E2101-6		81	1	J356
	42E2101-7		81	1	J356
	42E2107-1	*	77	1	G434
	42E2108-1	*	77-22	1	J357
	42E2110-1	M		1	J358,
					J359
	42E2113-1	M	81	1	J360
	42E2113-2	M	81	1	J360
	42E2114-1		78A	1	J361
	42E2115-1		78A	1	J362
	42E2116-1		78A	1	J363
	42E2117-1		78A	1	J364
	42E2118-1		78A-3	1	G435
	42E2119-1		78A	1	J365
	42E2121-1	A	81	1	J366
	42E2122-1	A	81	1	T333
	42E2122-2	M	81	3	T333
	42E2122-3	M	81	1	T333
	42E2122-4	M	81	1	T333
	42E2122-6	M	81	2	T333
	42E2123-1	A	81	1	J368
	42E2124-1		81	1	M182
	42E2124-2	A	81	1	M182
	42E2124-3		81	1	M182
	42E2125-1	M	81	1	G436
1AGJ	42E2126-1	P	81	1	G437
	42E2127-1	A	81-43	1	G438
	42E2129-1		78B	1	J369
	42E2132-1		81	2	
	42E2133-1		77	7	E465
	42E2211-1	A	77	1	T334
	42E2215-1	M1		1	G443
	42E2215-2	M1		1	G443
	42E2215-3	M1		1	G443
	42E2241-5	X2	74	1	
	42E2241-7	X2	74	1	M183,
	42E2241-9	X2	74	1	M184
	42E2247-1	M1	78	1	G444
1AGJ	42E2249-1	P		4	G445
	42E2261-1	M	74	1	E470
	42E2262-1		81	1	E471
	42E2267-1	*	77-6A	1	
	42E2269-1	X2	77	1	
	42E3001-1		86	1	M186
	42E3004-1		86	1	U96
	42E3009-2	*	86	1	J384
	42E3009-3	M	86	1	J384
	42E3011-1	*	86	1	T335
	42E3011-2	*	86	1	T335
	42E3011-8	*	86	1	T335
	42E3011-9	*	86	1	T335
	42E3012-1		86	1	M189
	42E3012-2		86	1	M189
	42E3012-3		86	1	M189
	42E3014-1		86	1	M190
	42E3017-1		86	1	U97
	42E3017-2		86	1	U97
	42E3017-3		86	1	U97
	42E3049-1	M1	86-10H	3	E475
	42E3049-2	M1	86-10B	4	E475
	42E3063-1	*	86	1	J386
	42E3063-2	*	86	1	J386
	42E3065-1		86	1	
	42E3070-10		86-10D	1	M193

AF Class Code or Stock No.	Part Number	Army Source Code	Figure and Index No.	Qty per Article	Micro-film Index
	42E3070-11		86	1	M193
	42E3070-2		86	1	M193
	42E3070-5		86	1	M193
	42E3070-7	M	86	1	M193
	42E3070-8		86-10F	1	M193
	42E3070-9		86-10E	1	M193
	42E3071-1	*	86	1	M194
	42E3207-1	M		1	E476
	42E3207-2	M		1	E476
	42E3207-3	M		2	E476
	42E3207-4	M		1	E476
	42E3207-5	M		1	E476
1AGJ	42E3208-1			1	G450
1AGJ	42E3208-2			1	G450
	42E3218-1		86	1	J393
	42E4004-1	*	74	1	J394
	42E4007-1	*	74	1	J395
	42E4010-1	*	74B	1	J396
	42E4011-1	*	74	1	M201
	42E4011-10	M1	74	1	M201
	42E4011-11		74	1	M201
	42E4011-12		74	1	M201
	42E4011-2	*	74	1	M201
	42E4011-3	M	74	1	M201
	42E4011-4	M	74	1	M201
	42E4011-5	M	74	1	M201
	42E4011-6	M1	74	1	M201
	42E4011-7	M	74	1	M201
	42E4011-8	M	74	1	M201
	42E4011-9	M1	74	1	M201
	42E4014-1	*	79	1	M202
	42E4015-1	*		1	
	42E4015-10	X1		2	
	42E4015-11	X1		1	
	42E4015-12	X1		1	
	42E4015-14	X1		4	
	42E4015-15	M		1	
	42E4015-16	M		1	
	42E4015-17	M		1	
	42E4015-18	M		1	
	42E4015-19	M		1	
1AGJ	42E4015-2	P1		1	
	42E4015-20	M		1	
	42E4015-21	M		1	
	42E4015-24	X1	74B-5	1	
	42E4015-25	X1	74B-6	1	M203,
	42E4015-26	X1		1	M204,
	42E4015-27	X1		1	J397
	42E4015-28	X1		2	
	42E4015-29	X1		2	
	42E4015-3	X1	74	1	
	42E4015-30	X1		1	
	42E4015-31	X1		1	
	42E4015-32	X1		1	
	42E4015-4	X1	74	1	
	42E4015-5	M		1	
	42E4015-51		74B	1	
	42E4015-52		74B	1	
	42E4015-6	X1		1	
	42E4015-7	X1		1	
	42E4015-8	M		1	
	42E4015-9	X1		2	
	42E4016-1	*	74	1	M205, J398
	42E4017-1	M1	74	9	J399
	42E4017-2	M1		9	J399
	42E4017-3	M1		9	J399
	42E4018-1	M1	74-20	1	J400
	42E4018-2	M1		1	J400
	42E4018-3	M1		1	J400
	42E4018-4	M1		2	J400
	42E4018-5	M1		1	J400
	42E4019-1	P	74	1	M206
	42E4019-5		74-18	1	M206

AF Class Code or Stock No.	Part Number	Army Source Code	Figure and Index No.	Qty per Article	Micro-film Index
	42E4020-1		89	1	
	42E4020-12	*		1	
	42E4020-13	*		1	
	42E4020-14	M		1	
	42E4020-15	*		1	
	42E4020-16	*		1	
	42E4020-17	M1		1	
	42E4020-18	M1		1	
	42E4020-2		89	2	
	42E4020-20	M	89	1	
	42E4020-21	M1		3	
	42E4020-22	M1		1	
1AGJ	42E4020-29	P	89	1	
	42E4020-3		89	2	
	42E4020-30	*	89	2	
	42E4020-31	*	89	2	
	42E4020-32	*	89	2	
	42E4020-33	*	89	2	
	42E4020-34	*	89	2	
	42E4020-35	M		2	M207,
	42E4020-36	M		2	M208
	42E4020-37	M1	89	1	
	42E4020-38	M1		1	
	42E4020-39	M1		1	
	42E4020-4		89	2	
	42E4020-40	M1	89	1	
	42E4020-41	M1	89	1	
	42E4020-42		89	1	
	42E4020-48		89	1	
	42E4020-49		89	1	
	42E4020-5		89	2	
	42E4020-50	M1	89	1	
	42E4020-51		89	1	
	42E4020-52	M1	89	1	
	42E4020-53		89	1	
	42E4020-54	M1	89	1	
	42E4020-55		89	1	
	42E4020-56	M1	89	1	
	42E4020-57		89	1	
	42E4020-6		89	2	
	42E4020-7	M1	89	1	
	42E4020-8	M1	89	1	
	42E4020-9	M1	89	1	
	42E4029-1	X2	81-15	1	M210
	42E4029-10		81	1	M210
	42E4029-2	M		1	M210
	42E4029-3	M		1	M210
	42E4029-4	M		1	M210
	42E4029-7	*	81	1	M210
	42E4029-9	X2	81	1	M210
	42E4030-1	*	89	1	M211
	42E4073-1	*	74	1	
	42E4073-10	M1		1	
	42E4073-2	X2	74	1	
	42E4081-1		81	1	J401
1AGJ	42E4082-1	P	89	20	D353
	42E4083-1	M1		2	J402
	42E4083-10	M1		1	J402
	42E4083-11	M1		1	J402
	42E4083-12	M1		2	J402
	42E4083-13	M1		4	J402
	42E4083-14	M1		1	J402
	42E4083-15	M1		1	J402
	42E4083-16	M1		1	J402
	42E4083-17	M1		1	J402
	42E4083-4	M1		2	J402
	42E4083-5	M1		1	J402
	42E4083-6	M1		1	J402
	42E4083-7	M1		1	J402
	42E4083-8	M1		2	J402
	42E4083-9	M1		1	J402
	42E4084-3	M1		1	J403
	42E4084-6	A	81-16	1	J403
	42E4084-7	A	81-17	1	J403
	42E4084-8	A	81-18	1	J403

AF Class Code or Stock No.	Part Number	Army Source Code	Figure and Index No.	Qty per Article	Micro-film Index
	42E4084-9	M		1	J403
	42E4086-10	M1		1	J404
	42E4086-11	M1		1	J404
	42E4086-12	M1		1	J404
	42E4086-13	M1		2	J404
	42E4086-14	M1		2	J404
	42E4086-16	M1		1	J404
	42E4086-17	M1		2	J404
	42E4086-18	M1		2	J404
	42E4086-19	M1		1	J404
	42E4086-2	M1		1	J404
	42E4086-20	M1		1	J404
	42E4086-21	M1		2	J404
	42E4086-22	M1		1	J404
	42E4086-3	M1		1	J404
	42E4086-5	M1		3	J404
	42E4086-6	M1		2	J404
	42E4086-7	M1		2	J404
	42E4086-8	M1		4	J404
	42E4086-9	M1		1	J404
	42E4087-1	M1		1	J405
	42E4087-10	M		2	J405
	42E4087-11	M		2	J405
	42E4087-12	M		1	J405
	42E4087-13	M		1	J405
	42E4087-14	M		1	J405
	42E4087-15	M1		1	J405
	42E4087-2	M1		2	J405
	42E4087-5	M		1	J405
	42E4087-9	M		2	J405
	42E4088-1	X2		1	G452
	42E4089-1		81-19	1	J406
	42E4099-1	P1		1	J410
	42E4099-9		85	1	J410
	42E4113-1	A	81	1	
	42E4114-1	X2	77	14	M217
	42E4114-2	X2	77	1	M217
	42E4116-1	M	77	1	G456
	42E4160-1		74	1	M235
1AGJ	42E4160-3	P		1	M235
	42E4160-6	M		1	M235
	42E4160-7	*	74	1	M235
	42E4160-8		74	1	M235
	42E4164-1	*	74B	1	M236
1AGJ	42E4164-17	P	74B	1	M236
1AGJ	42E4164-2	P	74B-45	1	M236
	42E4170-1	*	74B	1	
1AGJ	42E4170-10	P	74B-32	1	
1AGJ	42E4170-11	P	74B-17	1	
1AGJ	42E4170-12	P	74B-36	1	
1AGJ	42E4170-13	P	74B-13	1	
1AGJ	42E4170-14	P	74B-38	1	
1AGJ	42E4170-15	P	74B-11	1	
1AGJ	42E4170-153	P	74B-19	1	
1AGJ	42E4170-157	P	74B-31	1	
1AGJ	42E4170-16	P	74B-43		
1AGJ	42E4170-161	P	74B-16	1	U103,
1AGJ	42E4170-162	P	74B-35	1	U104,
1AGJ	42E4170-165	P	74B-9	1	U105,
1AGJ	42E4170-166	P	74B-40	1	U106,
1AGJ	42E4170-168	P	74B-33	1	U107,
1AGJ	42E4170-17	P	74B-24	1	U108
1AGJ	42E4170-177	P	74B-23	1	
1AGJ	42E4170-179	P	74B-7	1	
1AGJ	42E4170-18	P	74B-26	1	
1AGJ	42E4170-19	P	74B-21	1	
1AGJ	42E4170-20	P	74B-28	1	
1AGJ	42E4170-201	P	74B	1	
1AGJ	42E4170-203	P	74B	1	
1AGJ	42E4170-205	P	74B	1	
1AGJ	42E4170-207	P	74B	1	
1AGJ	42E4170-209	P	74B	1	
1AGJ	42E4170-21	P	74B-18	1	
1AGJ	42E4170-213	P	74B	1	
1AGJ	42E4170-22	P	74B-30	1	
	42E4170-225		74B-25	1	
1AGJ	42E4170-23	P	74B-15	1	
	42E4170-239		74B	1	
1AGJ	42E4170-24	P	74B-34	1	
1AGJ	42E4170-25	P	74B-12	1	
1AGJ	42E4170-26	P	74B-37	1	U103,
1AGJ	42E4170-27	P	74B-10	1	U104,
1AGJ	42E4170-28	P	74B-42	1	U105,
	42E4170-3		74B	1	U106,
1AGJ	42E4170-34	P	74B-14	1	U107,
	42E4170-4	*	74B	1	U108
1AGJ	42E4170-42	P	74B-41	1	
1AGJ	42E4170-45	P	74B-39	1	
1AGJ	42E4170-46	P	74B-27	1	
1AGJ	42E4170-47	P	74B-8	1	
1AGJ	42E4170-7	P	74B-22	1	
1AGJ	42E4170-8	P	74B-29	1	
1AGJ	42E4170-9	P	74B-20	1	
1AGJ	42E4177-1	P	74	1	J414
1AGJ	42E4177-2	P	74	1	J414
	42E4177-8		74	1	J414
	42E4177-9		74	1	J414
	42E4179-1	*	74	1	J415
	42E4181-1	*	74B	1	
1AGJ	42E4181-12	P	74B	1	
1AGJ	42E4181-14	P	74B	1	
1AGJ	42E4181-16	P	74B	1	
	42E4181-17		74B	1	
	42E4181-18		74B	1	
1AGJ	42E4181-2	P	74B-1	1	
1AGJ	42E4181-3	P	74B-2	1	
	42E4181-6		74B-3	1	
	42E4181-7		74B-4	1	
	42E5501-4	A	88	1	T338
	42E5501-5		88	1	T338
	42E5502-1	*	88	1	J423
1AGJ	42E5502-3	P	88-33	1	J423
1AGJ	42E5502-7	P	88-30	1	J423
1AGJ	42E5503-3	P1	88	2	N011
	42E5504-1	X2	88-68	1	G461
	42E5507-2	X1		1	G462
	42E5507-3	X1		1	G462
	42E5507-4	X1	88-70	1	G462
1AGJ	42E5509-1	P1	88-35	2	G463
1AGJ	42E5511-4	P	88-66	1	G464
1AGJ	42E5512-1	P1	88-56	1	J424
1AGJ	42E5512-3	X1		1	J424
1AGJ	42E5513-1	P	88-54	1	G465
	42E5514-1	M	88	1	G466
1AGJ	42E5516-1	P	88-59	1	G467
1AGJ	42E5516-2	P	88	1	G467
1AGJ	42E5516-3	P	88-58	1	G467
1AGJ	42E5516-4	P	88-63	1	G467
	42E5517-3	M		1	G468
	42E5519-1	M1	88-60	1	E480
	42E5519-2	M1	88-61	1	E480
	42E5525-1	*	88	1	N013
1AGJ	42E5526-1	*	88-1	1	E481
1AGJ	42E5527-1	X1		1	N014
1AGJ	42E5527-2	X1	88-11	1	N014
	42E5528-1	*	88	1	E482
	42E5529-1	M		1	G469
	42E5532-1	M	88-12	1	E484
	42E5534-3	P	88	1	E485,
	42E5534-5		88	1	E486
1AGJ	42E5541-1		88-51	1	E488
1AGJ	42E5544-1		88-50	1	E489
	42E5550-1	*	32B	1	N015
	42E5552-1	M1	32B-1	1	G470
	42E5552-2	M1		1	G470
1AGJ	42E5553-1	P	32B	1	E490

AF Class Code or Stock No.	Part Number	Army Source Code	Figure and Index No.	Qty per Article	Micro-film Index
	42E5554-1	M	32B-4	1	E491
	42E5555-1	M1		1	E492
	42E5555-2	M1		1	E492
	42E5556-1	A	32B-2	1	J426
	42E5556-10	X1		1	J426
	42E5556-11	X1		1	J426
	42E5556-12	X1		1	J426
	42E5556-13	X1		1	J426
	42E5556-14	X1		1	J426
	42E5556-15	X1		1	J426
	42E5556-2	A	32B-5	1	J426
	42E5556-3	A	32B-6	1	J426
1AGJ	42E5556-4	P		1	J426
1AGJ	42E5556-5	P		1	J426
1AGJ	42E5556-6	P		1	J426
1AGJ	42E5556-7	P		1	J426
1AGJ	42E5556-8	P		1	J426
1AGJ	42E5556-9	P		1	J426
	42E5558-1	M	32B	1	E493
	42E5558-2	M	32B	1	E493
1AGJ	42E5561-1	P	88-3	2	J427
	42E5561-2		88	2	J427
	42E5562-1	X1	88	2	D355
1AGJ	42E5563-1	P		2	E494
	42E5564-1	X1	88	2	D356
	42E5565-1	X1		2	D357
	42E5566-1	X1		2	E495
	42E5567-1	*	88	1	G471
1AGJ	42E5567-2	P	88	1	G471
	42E5567-3	X1		1	G471
	42E5567-4	X1		1	G471
	42E5567-5	X1		1	G471
	42E5567-6	X1		1	G471
	42E5567-7	A	88	1	G471
	42E5568-1	X1		2	D358
	42E5569-1	A	88	1	E496
	42E5569-3	X1	88	1	E496
	42E5570-1	A	88	1	J428
1AGJ	42E5570-10	P	88	1	J428
1AGJ	42E5570-2	P	88	1	J428
1AGJ	42E5570-3	P	88	1	J428
1AGJ	42E5570-4	P	88	1	J428
	42E5570-5	X1		1	J428
	42E5570-6	X1		1	J428
	42E5570-7	X1		1	J428
	42E5570-8	A	88	1	J428
1AGJ	42E5570-9	P	88	1	J428
1AGJ	42E5571-1	P	88-67	1	E497
	42E5579-1		88	1	U110
	42E5580-1		88-72	1	T175
	42E5581-1		88	1	T339
	42E5581-2		88	1	T339
	42E5582-1		88	1	T109
	42E5585-1		88-37A	1	T176
	42E6001-2	*	90	1	N016
	42E6001-3	*	90	1	N016
	42E6001-8	M1	90	1	N016
1AGJ	42E6050-2	X2	90	1	
	42E6050-4	*	90	1	
	42E6050-5	*		1	N017,
1AGJ	42E6050-6	P2	90	1	N018
	42E6050-7	A	90	1	
	42E6050-8		90	1	
	42E6050-9		90	1	
	42E6053-1	X1		1	J429
	42E6053-2	X1		1	J429
	42E6053-3	X1		1	J429
	42E6053-4	X1		1	J429
	42E6053-5	M1		1	J429
	42E6053-6	M1		1	J429
	42E6053-7	X1		1	J429
1AGJ	42E6062-1	P1	90-3A	1	E503
1AGJ	42E6064-1	M1		1	D359

AF Class Code or Stock No.	Part Number	Army Source Code	Figure and Index No.	Qty per Article	Micro-film Index
1AGJ	42E6065-1	P		1	J430
	42E6065-10		89	8	J430
	42E6065-5	X1		1	J430
	42E6068-1	A	90-11	1	J431
	42E6068-2	M1		1	J431
	42E6068-3	M1		1	J431
	42E6068-4	M1		1	J431
	42E6068-5	M		1	J431
	42E6068-6	M1		1	J431
	42E6068-8	M		1	J431
1AGJ	42E6069-1	P		1	D360
1AGJ	42E6070-1	P1		2	G473
	42E7001-1	*	91	1	
	42E7001-10	M	93-20	1	
	42E7001-101	M	93	1	
	42E7001-103	M	93	1	
	42E7001-105	M	91	1	
	42E7001-107	M	93	1	
	42E7001-109	M	93	1	
	42E7001-11	M	93-50	1	
	42E7001-111	M	93	1	
	42E7001-113	M	93	1	
	42E7001-115	M	93	1	
	42E7001-117	M	91	1	
	42E7001-119	M	91	1	
	42E7001-12	M	93-51	1	
	42E7001-121	M	91	1	
	42E7001-123	M	93	1	
	42E7001-125	M	93	1	
	42E7001-127	M	93	1	
	42E7001-129	M	93	1	
	42E7001-13	M	93-19	1	
	42E7001-131	M	93	1	
	42E7001-133	M	93	1	
	42E7001-135	M	93A-23	1	
	42E7001-137	M	93A-43	1	
	42E7001-139	M	93A-44	1	
	42E7001-14	M	93-44	1	
	42E7001-143	M	93A-42	1	
	42E7001-145		93A-41	1	
	42E7001-15	M	93-45	1	N019,
	42E7001-150	*	91	1	N020,
	42E7001-151		91	1	J432,
	42E7001-152		93A-25	1	J433,
	42E7001-16	M	93-43	1	J434,
	42E7001-163		91	1	N021
	42E7001-17	M	93-37	1	
	42E7001-18	M	93-39	1	
	42E7001-19	M	93-40	1	
	42E7001-2	M	91	1	
	42E7001-20	M	93-42	1	
	42E7001-21	M	93-41	1	
	42E7001-22	M	93-52	1	
	42E7001-23	M	93	1	
	42E7001-24	M	93-53	1	
	42E7001-25		91-38	1	
	42E7001-27	M		1	
	42E7001-28	M		1	
	42E7001-29	M		1	
	42E7001-3	M	91	1	
	42E7001-30	M		1	
	42E7001-31	M		1	
	42E7001-32	M		1	
	42E7001-33	M		1	
	42E7001-34	M		1	
	42E7001-35	M		1	
	42E7001-36	M		1	
	42E7001-37	M		1	
	42E7001-38	M		1	
	42E7001-39	M		1	
	42E7001-4	M	91	1	
	42E7001-40	M		1	
	42E7001-41	M		1	

AF Class Code or Stock No.	Part Number	Army Source Code	Figure and Index No.	Qty per Article	Micro-film Index
	42E7001-42	M		1	
	42E7001-43	M		1	
	42E7001-44	M		1	
	42E7001-45	M		1	
	42E7001-46	M		1	
	42E7001-47	M		1	
	42E7001-48	M		1	
	42E7001-49	M		1	
	42E7001-5	M	93-15	1	
	42E7001-50	M	93-18	1	
	42E7001-51	M	93-17	1	
	42E7001-52	M	93-16	1	
	42E7001-53	M	93-11	1	
	42E7001-54	M	93-10	1	
	42E7001-55	M	93-9	1	
	42E7001-56	M	93-8	1	
	42E7001-57	M	91	1	N019,
	42E7001-58	M	91	1	N020,
	42E7001-59	M	91-39	1	J432,
	42E7001-6	M	93-12	1	J433,
	42E7001-7	M		1	J434,
	42E7001-70	M	91	1	N021
	42E7001-71	M	91	1	
	42E7001-72	M	91-72	1	
	42E7001-77	M	91-12A	1	
	42E7001-8	M	91,	2	
			93-14		
	42E7001-80	A	93-23	1	
	42E7001-85		93	1	
	42E7001-87	M	93-54	1	
	42E7001-89	M	93-54A	1	
	42E7001-9	M	93-21	1	
	42E7001-91	M	91	1	
	42E7001-93	M	91	1	
	42E7001-95	M	91	1	
	42E7001-97	M	91	1	
	42E7001-99	M	91	1	
	42E7002-1		91	1	
	42E7002-5		91	1	
	42E7002-6		93	1	
	42E7002-7		91	1	
	42E7003-1	*	93	1	N022
	42E7007-1	*	91	1	N023
	42E7011-1	*		1	N024
	42E7012-1	M1	94	1	G475
	42E7041-1	M	93	2	E510
	42E7043-1	M		4	E511
	42E7044-1	M	93	2	E512
	42E7044-2	M	93	1	E512
	42E7057-1	X2		1	E514
	42E7067-1	*	93	1	N026
	42E7067-2	*	93	1	N026
	42E7067-3	M	93	1	N026
	42E7067-4	M	93	1	N026
	42E7067-6	A	93	1	N026
	42E7071-1	*	90	1	N027
	42E7071-2	*	90	1	N027
1AGJ	42E7071-3	A		1	N027
	42E7071-4		90	1	N027
1AGJ	42E7072-1	P1	93	1	G476
	42E7073-1	X2	93	1	E515
	42E7074-1	*		1	J439
	42E7074-2	M		1	J439
	42E7075-1	M		1	E516
1AGJ	42E7076-1	P1		1	J440
	42E7078-1	M	88	1	E517
	42E7078-2	M	88	1	E517
	42E7078-3		88	1	E517
	42E7081-2		93A	1	E519
	42E7082-1	M	92	3	E520
	42E7089-1		66-2A	1	T346
	42E7089-2		64-2A,	1	T346
			66-2B		
	42E7089-3		64-2B	1	T346
	42E7089-4		64-2C,	1	T346
			66-2C		
	42E7137-1	*	88	1	N029
	42F0065	*		1	N063
	42F1000-1	*		1	
	42F1001-1	M1		1	
	42F1002-1	*		1	N064
	42F1003-1	*		1	
	42F1003-3	M1		1	
	42F1004-1	*		1	N065
	42F1005-1	*		1	N066
	42F1006-1	*		1	N067
	42F1007-1	M1		1	J518
	42F1007-2	M1		1	J518
	42F1007-3	M1		1	J518
	42F1007-4	M1		1	J518
	42E1008-1	M1		1	
	42F1008-3	M1		1	
	42F1009-1	M1		1	
	42F1009-3	M1		1	
	42F1010-1	M1		1	
	42F1010-3	M1		1	
	42F1011-1	M1		1	
	42F1011-3	M1		1	
	42F1012-1	M1		1	
	42F1012-3	M1		1	
	42F1013-1	M1		1	
	42F1013-2	M1		1	
	42F1013-3	M1		1	
	42F1015-1	M1		1	
	42F1015-3	M1		1	
	42F1016-1	M1		1	N068
	42F1017-1	M1		1	
	42F1018-1	M1		1	
	42F1018-3	M1		1	
	42F1019-1	M1		1	
	42F1019-2	M1		1	
	42F1019-3	M1		1	
	42F1019-4	M1		1	
	42F1019-5	M1		1	
	42F1019-6	M1		1	
	42F1019-7	M1		1	
	42F1019-8	M1		1	
	42F1019-9	M1		2	
	42F1020-1	M1		1	
	42F1020-3	M1		1	
	42F1021-1	M1		1	
	42F1022-1	M1		1	
	42F1023-1	M1		1	
	42F1024-1	M1		1	
	42F1025-1	M1		1	
	42F1026-1	M1		1	
	42F1027-1	M1		1	
	42F1028-1	M1		1	
	42F1028-3	M1		1	
	42F1029-1	M1		1	
	42F1030-1	M1		1	
	42F1031-1	M1		1	G493
	42F1032-1	M1		1	
	42F1032-2	M1		1	
	42F1033-1	M1		1	
	42F1034-1	M1		1	
	42F1035-1	M1		2	
	42F1036-1	M1		1	F003
	42F1037-1	M1		1	F004
	42F1037-3	M1		1	F004
	42F1038-1	M1		2	F005
	42F1039-1	M1		2	F006
	42F1040-1	M1		1	F007
	42F1040-3	M1		1	F007
	42F1041-1	M1		2	F008
	42F1042-1	M1		1	
	42F1043-1	M1		2	
	42F1046-1	M1		1	

AF Class Code or Stock No.	Part Number	Army Source Code	Figure and Index No.	Qty per Article	Micro-film Index
	42F1046-3	M1		1	
1AGJ	42F1051-1	P1		2	
	42F1051-3	X1		2	
	42F1052-1	M1		2	
	42F1053-1	M1		1	
	42F1053-2	M1		1	
1AGJ	42F1054-1	P1		1	
	42F1054-2	M1		1	
	42F1054-3	X1		1	
	42F1054-4	M1		1	
1AGJ	42F1055-1	P		1	
1AGJ	42F1055-2	P		1	
	42F1055-3	M1		1	
	42F1055-4	M1		1	
	42F1056-1	M1		1	
	42F1056-2	M1		1	
	42F1057-1	M1		1	
	42F1057-2	M1		1	
	42F1058-1	M1		1	
	42F1058-2	M1		1	
	42F1058-3	M1		1	
	42F1058-4	M1		1	
	42F1059-1	M1		1	
	42F1059-2	M1		1	
	42F1059-3	M1		1	
	42F1059-4	M1		1	
	42F1060-1	M1		1	
	42F1060-3	M1		1	
	42F1061-1	M1		1	
	42F1062-1	M1		9	
	42F1063-1	M1		4	
	42F1065-1	M1		4	
	42F1065-3	M1		4	
	42F1065-5	M1		4	
	42F1066-1	M1		6	
	42F1067-1	M1		2	
	42F1067-2	M1		2	
	42F1068-1	M1		2	
	42F1068-2	M1		2	
	42F1070-1	M1		2	
	42F1072-1	M1		1	
	42F1072-2	M1		1	
	42F1072-3	M1		1	
	42F1072-4	M1		1	
	42F1072-5	M1		2	
	42F1073-1	M1		1	
	42F1073-2	M1		1	
	42F1073-3	M1		1	
	42F1073-4	M1		1	
	42F1073-5	M1		2	
	42F1074-1	M1		4	
	42F1074-3	M1		4	
	42F1074-5	M1		4	
	42F1076-1	M1		1	
	42F1076-3	M1		1	
	42F1076-5	M1		1	
	42F1077-1	M1		2	
	42F1081-1	M1		1	
	42F1082-1	M1		4	
	42F1083-1	M1		2	
	42F1084-1	M1		6	
	42F1085-1	M1		1	
	42F1086-1	M1		1	
	42F1087-1	M1		10	
	42L1001-1	*	24	1	N141
	42L1001-2	*	24	1	N141
	42L1001-3		24	1	N141
	42L1001-4		24	1	N141
	42L1002-1	A	24	1	N142
	42L1002-2	A	24	1	N142
	42L1002-3		24	1	N142
	42L1002-4		24	1	N142

AF Class Code or Stock No.	Part Number	Army Source Code	Figure and Index No.	Qty per Article	Micro-film Index
1AGJ	42L1004-1	*	24	2	N143,
1AGJ	42L1004-2		24	2	N144
1AGJ	42L1004-4		24	2	
	42L1005-1	A	24	1	K059
	42L1006-1	*		1	K060
	42L1006-2	*		1	K060
1AGJ	42L1007-1	P1	24	2	N145
	42L1007-2	X1		2	N145
1AGJ	42L1007-3		24-16	1	N145
1AGJ	42L1008-1	P1	24-10	1	K061
	42L1008-2	X1		4	K061
1AGJ	42L1008-3		24-11A	4	K061
1AGJ	42L1008-4		24-11B	4	K061
1AGJ	42L1010-2	P1	24-20A	4	K062
	42L1011-1	*	24	1	N146, N147
	42L1011-2	*	24	1	
	42L1011-4	M	24-26	2	
1AGJ	42L1011-9	M	24-27	10	
1AGJ	42L1014-1	*	12-6, 24-18	1	H008
1AGJ	42L1015-1	P1	24-52	1	H009
1AGJ	42L1016-1	P	12-7, 24-12	1	H010
1AGJ	42L1018-1	*	24-15	1	H011
1AGJ	42L1019-1	P	24-37	2	H012
	42L1020-1	X1		2	
1AGJ	42L1106-1	P	24A-6	4	T182
1AGJ	42L1140-1	P	24A-18	4	H014
1AGJ	42L1141-1	P	24A-21	2	H015
1AGJ	42L1142-1	M1	24A-25	4	K045
1AGJ	42L1143-1	*	24A-20	2	N149, N150
1AGJ	42L1145-1	A1	24A-11	4	K066
1AGJ	42L1147-1	P	24A-15	32	F141
1AGJ	42L1148-1	P	24A-19	4	F142
	42L2001-1	*	26	1	K068
	42L2001-2		26	1	K068
	42L2002-1	A	26	1	N151
	42L2002-2		26	1	N151
1AGJ	42L2003-2	P	26-9	2	U134
1AGJ	42L2003-3	P	26	1	U134
1AGJ	42L2003-4	*	26-7	1	U134
1AGJ	42L2004-1	*		1	N153, N154
1AGJ	42L2014-1	P	24-21	6	F143
	42L2103-1		26	1	
1AGJ	42L2140-1	P1	26-5	1	K069
1AGJ	42L2142-1	P1	26-6	2	K071
1AGJ	42L2143-1	P1	26-4	2	K072
	42P0001-1	*	27	1	N213
	42P0001-2	*	29	1	N213
	42P0005-1		27	1	
	42P0005-2		27	1	
	42P0010-1		27	1	N214
	42P1001-1	*	27,28	1	U143
	42P1054-3	X1	28	1	K102
	42P3001-1	*	29	1	U144
1AGJ	42P3001-6	P	29	1	U144
1AGJ	42P3001-7	P	29	1	U144
	42P3002-1		30A	1	U145
	42P3002-2		30A	1	U145
1AGJ	42P3003-1	A	29,30A	1	N217
1AGJ	42P3004-1	*	30A	1	U146
	42P3004-3	X1		1	U146
	42P3004-5	X1		1	U146
	42P3004-51	X1	30A	1	U146
	42P3004-53	X1	30A	1	U146
	42P3004-7	X1		1	U146
	42P3004-9	X1		1	U146
	42P3007-1	*	30A	1	N219
1AGJ	42P3007-2	P	30A-1	1	N219
1AGJ	42P3008-1	P	30A	1	
1AGJ	42P3009-1	P1	30A-8	1	N220
	42P3009-9	M		1	N220

AF Class Code or Stock No.	Part Number	Army Source Code	Figure and Index No.	Qty per Article	Micro-film Index
	42P3010-1	M	30A-2	1	H048
1AGJ	42P3011-1	P	30A-3	1	H049
	42P3012-1	M		1	
	42P3013-1		30A	1	N221
1AGJ	42P3015-1	P	30A	2	F178
	42P3018-1	M1		1	F179
	42P3018-2	M1		1	F179
	42P3018-5	M1		2	F179
1AGJ	42P3019-2	P	30A-11	1	K104
	42P3019-3	X1		1	K104
	42P3019-5	X1		1	K104
	42P3019-7	X1		1	K104
	42P3020-1		30A-10	1	
1AGJ	42P3021-1	P	30A-9	2	F180
	42P3030-1	*	29	1	K105
	42P3031-1		30A	1	N222
	42P3031-51		30A	1	N222
	42P3031-53		30A	1	N222
1AGJ	42P3075-1	P1	33-32	1	
	42P4003-1		32A	1	N223
	42P4004-1		32A	1	
	42P4004-10		32A-43	1	
	42P4004-11		32A-37	1	
	42P4004-14		32A-52	1	
	42P4004-15		32A-56	1	
	42P4004-16		32A-51	2	
	42P4004-18		32A	1	
	42P4004-6		32A-46	1	
	42P4004-7		32A-50	1	
	42P4004-8		32A-54	1	
	42P4004-9		32A-55	1	
1AGJ	42P4005-1		26	1	N224
	42P4008-1		32A	1	H050
	42P4009-1	M1	32A	1	H051
	42P4010-1		32A-19	1	F181
	42P4011-33		32A-16	1	K106
	42P4011-37		32A-99	1	K106
	42P4011-41		32A	1	K106
	42P4011-45		32A-21	1	K106
	42P4011-49		32A-18	1	K106
	42P4011-53		32A-14	1	K106
	42P4011-57		32A	1	K106
	42P4011-61		32A-39	1	K106
	42P4011-65		32A-47	1	K106
	42P4011-69		32A	1	K106
	42P4011-73		32A	1	K106
	42P4011-77		32A	1	K106
	42P4011-81		32A	1	K106
	42P4012-1	M	32A-4	1	H052
	42P4012-3			1	H052
	42P4014-1		32A-25	2	H054
	42P4016-1		32A	1	N226
	42P4017-1		32A-32	1	H055
	42P4018-1		32A	1	H056
	42P4019-1		32A	2	H057
1AGJ	42P4023-1	P1		2	K108
	42P4023-3	X1		2	K108
1AGJ	42P4025-1	P1		2	K109
	42P4025-3	X1		2	K109
	42P4041-1	P2	32	1	K111
	42P4042-1		32	1	K112
	42P4045-1		32	1	T184
	42P4046-1		32B	2	
	42P4048-1		32A	2	T117
	42P4051-1		32A	1	
	42P4051-2		32A	1	
	42P4209-1	*		1	
	42P4209-11		32A	1	
	42P4209-3	*		1	
	42P4209-7		32A-30	2	
	42P4209-9		32A-31	2	
	42P4210-1		32A-1	1	K114
	42P4211-1		32A-11	1	K115

AF Class Code or Stock No.	Part Number	Army Source Code	Figure and Index No.	Qty per Article	Micro-film Index
	42P4212-1		32A-10	1	K116
	42P5001-1	*	33	1	N228
1AGJ	42P5002-1	P1	33-38	1	U149
1AGJ	42P5002-21	P1	33	1	U149
1AGJ	42P5003-1	P1	33-14	1	
	42P5003-2	X2		1	
	42P5003-3	X2		1	
1AGJ	42P5003-4	P1		1	
	42P5003-5	M		1	
	42P5005-1	A		1	K117
	42P5005-2	A		1	K117
1AGJ	42P5006-1	*	33	1	
	42P5006-27		33	1	
	42P5006-28		33	1	
	42P5006-29		33	1	
1AGJ	42P5008-1	P	33	1	
1AGJ	42P5011-1			1	
	42P5027-1		33-53	2	
	42P5040-10	M		2	U151, U152
1AGJ	42P5040-18	P1	33	1	
	42P5040-9	*		1	
1AGJ	42P5042-1	P	33	1	F189
1AGJ	42P5043-1	P1		2	H062
	42P5043-2	X1		1	H062
	42P5046-1	M		1	F190
1AGJ	42P5046-2	P	33	1	F190
1AGJ	42P5047-1	X1		2	F191
	42P5048-1	M	33	1	F192
1AGJ	42P5049-1	P1		1	T188
	42P5049-2	X1		1	T188
	42P5049-3	X1		1	T188
1AGJ	42P5049-4	P	33-12	1	T188
1AGJ	42P5049-5	P1	33-13	1	T188
1AGJ	42P5050-1	A	33	1	H063
1AGJ	42P5050-2	P1	33	1	H063
1AGJ	42P5050-3	A	33	1	H063
1AGJ	42P5050-4	P1	33	1	H063
1AGJ	42P5051-1	A	33	1	H064
1AGJ	42P5051-2	*		1	H064
1AGJ	42P5051-3	P1	33	1	H064
	42P5053-10	M		1	H065
	42P5053-11	M		2	H065
	42P5053-12	M		1	H065
	42P5055-1	X1		1	P001
	42P5055-2	X1		1	P001
	42P5055-3	X1		1	P001
	42P5055-4	X1		1	P001
	42P5055-5	X1		1	P001
	42P5055-6	X1		2	P001
	42P5055-7	X1		2	P001
	42P5055-8	X1		1	P001
1AGJ	42P5058-1	P1	33-9	1	P002, P003
1AGJ	42P5058-57	P1	33-10	1	
1AGJ	42P5060-1	P1	33	1	K128, K129
	42P5061-1		33	1	H066
1AGJ	42P5063-1	X1		1	P005
	42P5065-1		33	1	H068
1AGJ	42P5067-1	A	33	4	H070
1AGJ	42P5067-2	P	33	4	H070
1AGJ	42P5069-1	P1	33	1	H072, H073, H074
	42P6001-1	*	27,33	1	P011,
	42P6001-2	*	33	1	P012
	42P6002-1		32B	1	P013
	42P6002-2		32B	1	P013
	42P6002-3		32B	1	P013
	42P6002-4		32B	1	P013
	42P6002-5		32B	1	P013
	42P6002-6		32B	1	P013
	42P6002-7		32B	1	P013
	42P6002-8		32B	1	P013

AF Class Code or Stock No.	Part Number	Army Source Code	Figure and Index No.	Qty per Article	Micro-film Index
	42P6002-9		32B	1	P013
	42P6003-1		32B-20	1	P014
	42P6003-2		32B-11	1	P014
	42P6004-1		32B-25	1	U154
	42P6004-2		32B-26	1	U154
	42P6006-1		32B	1	T384,
	42P6006-2		32B-15	1	T385
	42P6007-1		32B	4	K133
	42P6007-2		32B-19	4	K133
	42P6007-9		32B	4	K133
	42P6011-5		32B-17	4	K134
	42P6012-1		32B-14	1	K135
	42P6012-2		32B	1	K135
	42P6013-1		32B-9	4	H083,
	42P6013-14		32B	4	H084
	42P6013-7		32B	4	
	42P6014-1		32B-12	4	F193
	42P6019-1		32B-13	4	F194
	42P6020-1		32B-27	4	F195
	42P6021-1		32B-31	4	K137
	42P6022-1		32B-32	2	K138
	42P6022-2		32B-33	2	K138
	42P6023-3		32B-24	1	H088
1AGJ	42P6026-1		33	7	P016
	42P6056-8		33	2	
1AGJ	42R1060-1		3A-1	6	U173
1AGJ	42R1060-2		3A	6	U173
1AGJ	42R2001-1	P1	2	1	
1AGJ	42R2001-2	P1	2	1	
1AGJ	42R2001-3	P1	2	1	
1AGJ	42R2001-4	P1	2	1	
1AGJ	42R2063-1	P1	2	12	
	42S0001-1	X	8	1	Q070
	42S0002-1	X	8	1	Q071
	42S0003-1		8	1	Q072
	42S0050-1	X	8	1	Q074
	42S0051-1	X	8	1	Q075
	42S0052-1	*	8	1	U191
	42S1001-1	*	9	1	Q076
	42S1002-1	*		1	Q077
1AGJ	42S1042-1	P		1	H258
1AGJ	42S1042-2	P		1	H258
1AGJ	42S1043-1	*	9-33	1	K339
1AGJ	42S1043-2	*	9	1	K339
	42S1043-5	P1	9	1	K339
1AGJ	42S1043-6	P1	9	1	K339
1AGJ	42S1045-1	P1	9	1	K340
	42S1045-3	X1	9	1	K340
1AGJ	42S1048-1	*	9-37	1	
1AGJ	42S1048-2	*	9	1	H260,
	42S1048-3	X1	9	1	K341
	42S1048-4	X1	9	1	
1AGJ	42S1051-1	P1	9-4	1	K342
	42S1051-3	X1	9	1	K342
1AGJ	42S1052-1	P1	9-16	1	Q078
1AGJ	42S1052-2	P1	9	1	Q078
1AGJ	42S1052-3	X1	9	1	Q078
1AGJ	42S1052-4	X1	9	1	Q078
1AGJ	42S1054-1	P1	9-6	1	T415
	42S1054-3	X1	9	1	T415

AF Class Code or Stock No.	Part Number	Army Source Code	Figure and Index No.	Qty per Article	Micro-film Index
1AGJ	42S1055-1	P1		1	H261
1AGJ	42S1055-2	P1		1	H261
	42S1062-1	X2		1	
	42S1067-1	M	9	2	D460
	42S1070-1	X1	9	1	U192
	42S1071-1	X1	9	1	U193
1AGJ	42S1078-1	P1	9	1	K345
1AGJ	42S1078-2	P1	9	1	K345
	42S1078-3	X1	9	1	K345
	42S1078-4	X1	9	1	K345
1AGJ	42S1080-1	P1	9	1	
	42S1080-10		9	1	
1AGJ	42S1080-2	P1	9	1	
1AGJ	42S1080-3	X1	9	1	K346,
1AGJ	42S1080-4	X1	9	1	K347,
	42S1080-7		9	1	K348
	42S1080-8		9	1	
	42S1080-9		9	1	
1AGJ	42S1081-1		9-24	1	
1AGJ	42S1081-2		9	1	
	42S1081-3		9	1	
	42S1081-4		9	1	
	42S2001-1	*		1	Q080
	42S2001-3	*		1	Q080
	42S2013-1	*	21	1	
	42S2014-1	*	21	1	
	42S2018-1	*	21	1	Q081
	42S2019-1	*	21	1	
	42S2023-1	*	21	1	
	42S2023-24	*	21	1	
	42S2023-25		21	1	
	42S2023-26		21	1	
	42S2023-27		21	1	
	42S2028-1	*	21-25, 22	1	Q082
	42S2032-1	*	21-24, 22	1	Q084
	42S2032-2	*	21,22	1	Q084
	42S2041-1		21	1	Q087
	42S2044-3	A	77-44	1	
	42S2048-1	*	21	1	
	42S2049-1	*	8,11	1	
	42S2049-2	*	8,11	1	
	42S2049-3	M1	11	1	
	42S2049-4	M1	11-35	1	
	42S2055-1	A	22-65	1	K352
1AGJ	42S2055-3	P1		1	K352
	42S2056-1	A	22	1	K353
	42S2057-1		22-72	1	K354
	42S2058-1	A	22	1	K355
	42S2068-1	*	21	1	K356
	42S2076-1	M1	21	1	K357
	42S2077-1	*	21	1	
	42S2091-1	*	21	1	H263
	42S2093-1	*	21	1	K360
	42S2094-1	*	21	1	Q094
	42S2094-2	*	21	1	Q094
	42S2096-1	*	21	1	K361
	42S2187-1		86A	1	K365
	42S2189-1		86A	1	H265
	42S2191-1		86A	2	F364
	42S2207-1		86A	1	F365
	42S2299-1		22-57	1	F371
	42S2305-5		32B	1	Q099
	42S2309-1	*	21	1	
	42S2811-1	*	21	1	Q100
	42S2883-5		32B	1	K372
	42S2353-1		22	1	Q103
	42S2353-10		22	1	Q103
	42S2353-2		22-48	1	Q103
	42S2353-4		22	1	Q103
	42S2353-5		22	1	Q103
	42S2353-8		22	1	Q103
	42S2353-9		22	1	Q103

AF Class Code or Stock No.	Part Number	Army Source Code	Figure and Index No.	Qty per Article	Micro-film Index
	42S2354-1	A	22	1	K374
	42S2354-2	P2	22-56	1	K374
	42S2355-1		22	1	Q104
	42S2355-2	A	22	1	Q104
	42S2357-1	*	21-6, 22	1	Q105
	42S2359-1	A	21-9	1	K376
	42S2362-1	*	21	1	
	42S2365-1		22-16	1	Q110
1AGJ	42S2366-1	P2	22-28	1	K377
	42S2367-2	A	22	1	K378
	42S2368-1	A	22	1	K379
	42S2369-1	A	21-5, 22	1	Q111
	42S2370-1	*	21	1	
	42S2370-2	*	21	1	
	42S2372-1	*	21	1	
	42S2373-1	M	21,22	1	
	42S2374-1	*	21	1	
	42S2374-2	A1	21	1	
	42S2374-25	*	21	1	
	42S2374-26	A1	21	1	
	42S2374-29		21	1	
	42S2374-30		21	1	
	42S2387-1	*	21	1	
	42S2388-1		22-2	1	F383
	42S2388-2		22-3	2	F383
	42S2388-3		22-4	1	F383
	42S2388-5		22-5	1	F383
	42S2389-11		32B	2	
	42S2394-1	*	21	1	
	42S2395-1		22-14	1	D474
	42S3002-1	*	8,19	1	U196,
	42S3002-4	*	8,19	1	U197
	42S3004-1	*	32	1	U198
	42S3005-1		30A	2	Q116
	42S3006-1	*		1	
	42S3008-1	A	30A-25	2	K381
1AGJ	42S3042-1	P	10	1	H269
	42S3050-10		16	1	K382
	42S3082-1		30A	2	T419
	42S3105-1	*	32	1	U202
1AGJ	42S3105-10	P	32	1	U202
1AGJ	42S3105-11	P	32	1	U202
1AGJ	42S3105-12	M	32	1	U202
	42S3105-3	M	32	1	U202
	42S3105-4		32	1	U202
	42S3105-5	P1	32	1	U202
1AGJ	42S3105-9	P	32	1	U202
1AGJ	42S3106-1	P	32	1	
1AGJ	42S3112-1	*		1	
1AGJ	42S3113-1	*		1	
1AGJ	42S3113-15	M1		1	
1AGJ	42S3113-19	M1		1	
1AGJ	42S3113-21	M1		1	
1AGJ	42S3113-3	M1	32	1	
1AGJ	42S3117-1	P	16,32	1	
1AGJ	42S3117-14	M	32	1	
	42S3117-15		32	1	
1AGJ	42S3117-9	M1	32	1	
1AGJ	42S3124-1	P	32	1	
	42S3124-6		32	1	
	42S3170-1	*		1	Q127, Q128
1AGJ	42S3213-1	*	16	1	Q130
1AGJ	42S3241-1	P	16-52	1	
	42S3325-1		30A-26	2	F394
	42S3333-1	*		1	Q131
	42S3333-2	*		1	Q131
	42S3340-1		32A	1	K386
	42S3340-2		32A-29	1	K386
	42S3850-1	*		1	Q132, Q133, Q134

AF Class Code or Stock No.	Part Number	Army Source Code	Figure and Index No.	Qty per Article	Micro-film Index
	42S4001-1	*		1	Q136
	42S4001-3	*		1	Q136
	42S4010-1	*	12	1	Q138
	42S4010-2	*	12	1	Q138
	42S4011-1	*	8-37	1	Q139,
	42S4011-4	*	8	1	Q140
	42S4012-1	*	8-36, 89	1	Q141, Q142,
	42S4012-2	*	8,89	1	Q143
	42S4030-1	*	12	1	K392
	42S4039-2		12	2	F408
	42S4050-3		16	1	
	42S4052-1		90	1	K393
	42S4053-1	*	12	1	Q149
	42S4053-3	P1	12	1	Q149
1AGJ	42S4053-5	P1	12	1	Q149
	42S4054-1		16	1	K394
	42S4059-1	P	14-5	1	F409
1AGJ	42S4059-2	P	14-6	1	F409
1AGJ	42S4059-3	P	14-13	1	F409
1AGJ	42S4059-4	P	14-14	1	F409
	42S4060-1		85	1	Q150
	42S4060-5		85	2	Q150
	42S4079-1	*		1	K396
	42S4079-2	*		1	K396
	42S4080-1	*	8	1	Q153
	42S4080-3	*	8	1	Q153
	42S4083-1	*	13,14	1	
1AGJ	42S4083-2	P1	14-1	1	
	42S4084-1	*	13,14	1	Q154
1AGJ	42S4084-2	*	14-10	1	Q154
1AGJ	42S4086-1	*		1	Q155
1AGJ	42S4086-2	*		1	Q155
	42S4143-1	*	16	1	K400
	42S4163-1		12	1	F414
	42S4304-1	*		1	Q165, Q166
	42S4305-1	*	16	1	K404
1AGJ	42S4412-1	P		15	F416
1AGJ	42S4412-2	P		4	F416
1AGJ	42S4412-3	P		1	F416
1AGJ	42S4413-1	P1		1	K412
1AGJ	42S4413-2	P1		1	K412
1AGJ	42S4413-5	P1		1	K412
1AGJ	42S4413-6	P1		1	K412
1AGJ	42S4414-21	P		5	K413
1AGJ	42S4414-22	P		5	K413
1AGJ	42S4414-23	P		2	K413
1AGJ	42S4414-24	P		1	K413
1AGJ	42S4414-25	P		1	K413
1AGJ	42S4414-26	P		1	K413
1AGJ	42S4414-28	P		1	K413
1AGJ	42S4414-29	P		1	K413
1AGJ	42S4414-30	P		2	K413
1AGJ	42S4415-1	P		2	F417
1AGJ	42S4424-1	P		1	H283
1AGJ	42S4438-1	P		1	H284
1AGJ	42S4439-1	P1		2	F418
1AGJ	42S4441-3	P		1	H286
1AGJ	42S4441-4	P1		1	H286
	42S4443-1		16	1	
	42S4445-1	A	16	1	F420
	42S4453-1		12,88	2	F421
	42S4455-1		12	1	D489
1AGJ	42S4475-1			2	F424
1AGJ	42S4475-2			2	F424
1AGJ	42S4524-1	P1		2	H288
1AGJ	42S4531-1	P1		17	H289
1AGJ	42S4531-3	P1		9	H289
1AGJ	42S4550-1	P1		1	F431
	42S4562-1	*	8	1	Q183
	42S4562-2	*	8	1	Q183
	42S4562-3	*	8	1	Q183
	42S4562-4		8	1	Q183
	42S4573-1	*	8	1	
	42S4676-1	M	88	1	
1AGJ	42S4680-1	X1		1	F437
	42S4680-4		86-10A	1	F437
1AGJ	42S4693-1	P	86-3A	1	H295
	42S4700-1		32B	1	Q186,
	42S4700-3	*	32B	1	Q187
	42S4700-4		32B	1	
	42S4754-1		32B-37	1	Q188
	42S4754-6		32B	1	Q188
	42S4755-1		32B-36	1	Q189
	42S4755-6		32B	1	Q189
	42S4923-1	*	32B	1	Q200, Q201
	42S4934-1	*	16	1	Q202
	42S4942-1		32B-35	2	Q203
	42S4942-3		32B	2	Q203
	42S4948-1		32B	2	F460
	42S4948-2		32B	2	F460
1AGJ	42S4951-1	P2	32B	2	K429
1AGJ	42S4951-2	P2	32B	2	K429
	42S5001-1	*	8,11	1	U209
	42S5003-1	*	8,11	1	Q205
	42S5004-1	*	8	2	
	42S5004-2	A1	8	2	
	42S5005-1	*	8	1	
	42S5006-1	*	8	1	
	42S5040-1	*	8	1	
	42S5040-2	A1	8	1	
	42S5045-1	M1	8-65, 11	1	Q206
	42S5046-1	*	11	1	
	45S5049-1		11	1	Q207
	42S5049-2	M1	11	2	Q207
1AGJ	42S5051-1	P1	11-5	1	T422
1AGJ	42S5051-2	P1	11	1	T422
	42S5056-1	*	8,11	1	
	42S5056-2	*	8-66	1	
	42S5063-1	*	8	1	
	42S5063-2	*	8	1	
	42S5063-20	M1	8-6	1	
	42S5063-3	A1	8	1	
	42S5063-31		8	1	
	42S5063-32		8	1	
	42S5063-33		8	1	
	42S5063-34		8	1	
	42S5063-4	A1	8	1	
	42S5070-1	*	7, 8-46	1	Q212
	42S5074-1		11-11B	1	F464
	42S5076-1		11-33	1	F465
	42S5077-1	*	8,11	1	
	42S5077-3	M1	8	1	
	42S5077-4	M1	8	1	
	42S5084-1	*	8,11	1	
	42S5084-3	M1	8	1	
	42S5084-4	M1	8	1	
	42S5086-1	*	8	1	
	42S5086-2	*	8	1	
	42S5087-1	*	8,11	1	
	42S5087-41	*	8,11	1	
	42S5087-54	*	8,11	1	
	42S5087-60		8	1	
	42S5117-13		11	1	U214
	42S5117-14		11	1	U214
1AGJ	42S5175-1	P	88	1	F469, F470
	42S5176-1	*	8,11	1	Q215
	42S5176-3	M1	8-44	1	Q215
	42S5176-4	*	8-45	1	Q215
	42S5177-1	*	8-34	1	Q216
1AGJ	42S5181-1	M1		2	F471

AF Class Code or Stock No.	Part Number	Army Source Code	Figure and Index No.	Qty per Article	Micro-film Index
	42S5195-1	*	8	1	
	42S5195-10	*	8	1	
	42S5196-1	M1	8,11	1	
	42S5196-6		8,11	1	
	42S5209-1	*	11-14	1	
	42S5222-1	*	11-32	1	F477
	42S7001-1	*	8,11	1	
	42S7001-2	A1	8,11	1	
	42S7002-1	*	8-8	1	Q218,
	42S7002-3	A1	8	1	Q219
	42S7003-1	*	8-11	1	Q220
	42S7003-3	A1	8	1	Q220
	42S7004-1	*	8-22	1	Q221
	42S7004-3	A1	8	1	Q221
	42S7005-1	*	8-23	1	Q222
	42S7005-3	A1	8	1	Q222
	42S7006-1	*	8-25	1	Q223
	42S7006-3	A1	8	1	Q223
	42S7007-1	*	8-27	1	Q224
	42S7007-3	A1	8	1	Q224
	42S7008-1	*	8-28	1	Q225
	42S7008-3	A1	8	1	Q225
	42S7009-1	*	8-31	1	R001
	42S7009-3	A1	8	1	R001
	42S7010-1	*	8-41	1	
	42S7010-3	A1	8	1	
	42S7010-4	A1	8	1	
	42S7012-1	*	8-47, 9	1	
	42S7012-29		7	1	
	42S7012-3	A1	8	1	
	42S7012-31	M1	7	1	
	42S7013-1	*	8-48	1	
	42S7013-13	*	8	1	
	42S7013-14	M1	8	1	
	42S7013-3	M1	8	1	
	42S7014-23		8-53	1	
	42S7014-24		8-54	1	
	42S7015-1	*	8-57, 10	1	
	42S7015-26	M1	10-6	1	
	42S7015-3	A1	8,10	1	
	42S7016-1	*	8-60	1	
	42S7016-3	A1	8	1	
	42S7017-1	*	8-62	1	
	42S7017-3	M1	8	1	
	42S7018-1	M1	8-63	1	
	42S7019-1	*	15	1	R002
	42S7019-3	*	15	1	R002
	42S7019-52		15	11	R002
	42S7019-53		15	1	R002
	42S7019-54		15	11	R002
	42S7020-1		8-9	1	
	42S7020-3		8	1	
	42S7022-1	*	8-24	1	R003
	42S7022-3		8	1	R003
	42S7024-1	*	8-30	1	
	42S7024-3		8	1	
	42S7025-1	*	8-33	1	R004
	42S7026-1	*	15	1	R005, R006, R007, R008, R009
	42S7031-1	A1	8	1	
	42S7031-46	A1	8	1	
	42S7037-1	*	8-20	1	R010
	42S7037-3	*	8	1	R010
	42S7038-1	*	8-26	1	R011
	42S7038-3	A1	8	1	R011
	42S7040-1	M1	8-13	1	
	42S7040-2	M1	8-15	1	
	42S7040-3	M1	8-12	1	
	42S7040-4	M1	8-14	1	
	42S7040-5		8	1	
	42S7040-6		8	1	
	42S7042-1	M1	8-17	1	
	42S7042-3	M1	8-16	1	
	42S7042-4		8	1	
	42S7043-1	M1	8-19	1	
	42S7043-3	M1	8-18	1	
	42S7043-4		8	1	
	42S7044-1	*	8-51	1	
	42S7044-415	*	8	1	
	42S7044-441		8	1	
	42S7045-1	*	8-49	1	
	42S7045-2	*	8-50	1	
	42S7046-1	*	8-43	1	
1AGJ	42S7046-3	M1		1	
	42S7046-35	*	8-32	1	
	42S7046-37	A1	8	1	
	42S7047-1	*	8	1	
	42S7047-32	*	8	1	
	42S7050-1	*	8-29	1	
	42S7050-402	*	8	1	U216,
	42S7050-405		8	1	U217,
	42S7050-406	M	8	1	U218
	42S7050-407	M	8	1	
	42S7050-7	M	8-29B	1	
	42S7051-1	*	8-7	1	
	42S7051-2	*	8	1	
	42S7051-39	M1	8	1	
	42S7051-45	M1	8	1	
	42S7051-61	M	8	1	
	42S7051-63	M	8	1	
	42S7051-66	M	8	1	
	42S7051-77		8	1	
	42S7051-78		8	1	
1AGJ	42S7108-1	P1		1	
	42S7179-4		88	1	U219
1AGJ	42S7195-3	P1	15	1	U220
	42S7195-33		15	1	U220
1AGJ	42S7195-35	P1	15	1	U220
	42S7195-36		15	6	U220
	42S7195-37		15	2	U220
	42S7195-42		15-29	1	U220
	42S7195-44		15-27	1	U220
1AGJ	42S7195-5	*	15	1	U220
1AGJ	42S7195-7	P1	15	1	U220
1AGJ	42S7196-27	P1	15	1	U221
	42S7196-29		15-24	1	U221
1AGJ	42S7196-3	P	15	1	U221
1AGJ	42S7196-5	P1	15	1	U221
1AGJ	42S7197-3	X1	15	1	U222
1AGJ	42S7197-39	P1	15-23	1	U222
1AGJ	42S7197-41	P1	15-21	1	U222
	42S7197-43		15-19	1	U222
1AGJ	42S7197-5	*	15	1	U222
1AGJ	42S7197-7	*	15	1	U222
1AGJ	42S7198-3	P1	15	1	U223
1AGJ	42S7198-33	P1	15-18	1	U223
	42S7198-35		15-17	1	U223
1AGJ	42S7198-5	*	17	1	U223
1AGJ	42S7199-1	P1	15-15	1	K443
	42S7565-401	M	8-29A	1	F501
	42S7568-2	M	8	1	H325
	42S7907-1	*	15	1	
	42S7907-7		15	1	
	42S7908-1	X2	15	1	
	42S7908-10		15	1	
	42S7944-1	M	15-31	1	
	42S7950-1	*	15	1	R022
	42S7950-2	*	15	1	R022
	42S7988-1	A1	8-35	1	R032
1AGJ	42S8003-3	P	16	1	R033
	42S8005-1	*	7,8	2	K464
1AGJ	42S8005-7	P	7,8	2	K464
	42S8007-25		16	1	

AF Class Code or Stock No.	Part Number	Army Source Code	Figure and Index No.	Qty per Article	Micro-film Index
1AGJ	42S8007-3	P1	16	1	
	42S8008-11		16	1	
1AGJ	42S8008-3	*	16	1	V3,
	42S8008-9		16	1	V4
	42S8009-1	*	16	1	V5
1AGJ	42S8009-3	P		1	V5
1AGJ	42S8009-8	P1	16-29	1	V5
	42S8011-1	*	17	3	
1AGJ	42S8011-11	*	17	1	
	42S80011-15	M	17	2	
	42S8011-17	M1	17-51	8	
	42S8011-2	*	17	3	
	42S8011-23		17	8	
	42S8011-25	X1	17	1	
1AGJ	42S8011-27	P	17	1	
	42S8011-3	*	17	1	
	42S8011-31	M1	17	1	
	42S8011-404	M	17	1	
	42S8011-405	M	17	1	
	42S8011-408	M	17	1	
	42S8011-409	M	17	1	
	42S8011-410	M	17	1	
1AGJ	42S8011-411		17	1	
	42S8011-417		17	1	
	42S8011-5	*	17	1	
	42S8011-7	*	17	1	
1AGJ	42S8011-9	*	17-48	1	
	42S8014-1	*	18A	1	T426
	42S8014-2	*	18A	1	T426
1AGJ	42S8015-1	*	18A-1	1	
	42S8015-15	*		1	
	42S8015-17	*		1	
	42S8015-19	*		1	R037,
	42S8015-21	*		1	R038,
	42S8015-404	M	18A	1	R039,
	42S8015-405	M	18A	1	R040
	42S8015-406	M	18A	1	
	42S8015-407	M	18A	1	
	42S8016-1	*	18A	1	K466
	42S8016-3	*	18A	1	K466
	42S8018-1	*	18A	1	V6
	42S8018-3	*	18A	1	V6
1AGJ	42S8018-401	A	18A-25	1	V6
1AGJ	42S8018-402	A	18A-27	1	V6
	42S8018-5	*		1	V6
	42S8018-7	*		1	V6
	42S8018-9	*	18A	1	V6
	42S8019-1	*	18A	1	
1AGJ	42S8019-11	P1		1	
	42S8019-3	*	18A	1	
1AGJ	42S8019-401	A	18A-51	1	R042,
1AGJ	42S8019-402	A	18A-54	1	R043
1AGJ	42S8019-5	*		1	
1AGJ	42S8019-7	*		1	
	42S8019-9	*	18A	1	
	42S8061-1	*	16	1	R048,
	42S8061-10	A	16	1	R049
1AGJ	42S8069-1	P1	18A-28	6	K474
1AGJ	42S8070-1	P1	18A-55	1	K475
1AGJ	42S8072-1	P1	18A-56	2	K477
	42S8073-1	*	18	1	R050
	42S8074-1	*	18	1	R051
	42S8081-1	M	18-46	5	
1AGJ	42S8092-3	*	16	56	K481
1AGJ	42S8092-57	P	16	16	K481
	42S8092-59		16	35	K481
1AGJ	42S8092-60	M1	16	16	K481
	42S8095-1	M1	18A-57	1	H342
1AGJ	42S8163-1	P	16	1	R057
1AGJ	42S8163-2	P	16	1	R057
	42S8164-1	*	16	1	
	42S8164-2	*	16	1	
	42S8170-1		8	1	R058
	42S8170-2		8	1	R058

AF Class Code or Stock No.	Part Number	Army Source Code	Figure and Index No.	Qty per Article	Micro-film Index
	42S8176-1		16	1	K484
	42S8176-2		16	1	K484
1AGJ	42S8176-3	P	16	1	K484
1AGJ	42S8176-4	P	16	1	K484
	42S8204-1	P1	18A	1	G001
1AGJ	42S8245-1	P1	18A	1	K485
1AGJ	42S8246-1	P1	18A-26	5	K486
1AGJ	42S8248-1		18A-52	4	H344
1AGJ	42S8248-2	P1	18A-53	1	H344
1AGJ	42S8250-1	P1		1	E029
1AGJ	42S8250-3	P1		1	E029
	42S8251-1	P1	18-52, 18A-59	1	H345
	42S8253-1			1	E030
1AGJ	42S8264-1	P1	18A	5	G011
1AGJ	42S8265-1	P1	18A	3	G012
1AGJ	42S8273-1	P	18A-33	1	K488
1AGJ	42S8281-1	P1		5	G014
	42S8282-1	M	18	2	G015
	42S8282-3		18	1	G015
	42S8282-5	M	18	1	G015
	42S8283-1	M	18	1	G016
	42S8283-3		18	1	G016
	42S8297-1		18A	1	K489
	42S8297-4		18A-58	1	K489
1AGJ	42S8320-1	P	16	1	H348
1AGJ	42S8320-3	P	16	1	H348
	42S8350-1	M	16	1	
	42S8417-1		16, 18A-43	3	T150
1AGJ	42S8428-1	P1		1	H352
1AGJ	42S8428-2	P1		1	H352
1AGJ	42S8432-1	P		1	G027
1AGJ	42S8432-2	P		1	G027
	42S8435-1	M	13	1	G028
	42S8451-1	*	8	1	
	42S8451-2	*	8	1	
	42S8451-425	*	8	1	
	42S8451-426	*	8	1	
	42S8451-5	*	8	1	
1AGJ	42S8456-1	P1	18A	1	
	42S8456-12	M	18A	1	
	42S8456-13	M	18A	1	
	42S8456-29	M	18A	1	R076,
	42S8456-30	M	18A	1	R077
	42S8456-31		18A	1	
	42S8456-32		18A	1	
	42S8456-38		18A	2	
	42S8457-10	A1	8	1	
	42S8457-23		8	1	
	42S8457-24		8	1	
	42S8457-9		8	1	
1AGJ	42S8460-1	P1	18A	1	
	42S8460-14	X1	18A	1	
	42S8460-23	*	18A	1	
	42S8460-24	*	18A	1	
	42S8460-25	M	18-5, 18A-5A	2	
	42S8460-26	M	18A	1	
	42S8460-3	A	18A	1	V9,
	42S8460-30	*	18A	1	V10
	42S8460-32	M	18A	1	
	42S8460-33	M	18A	1	
	42S8460-34	M	18A	1	
	42S8460-36		18A	1	
	42S8460-37		18A	1	
	42S8460-38		18A	1	
1AGJ	42S8467-1	P	18-2, 18A-3	2	R080
	42S8467-10	M	18-12, 18A-12	2	R080
1AGJ	42S8467-3	P	18-6, 18A-6	2	R080
	42S8467-4	X1	18,18A	2	R080

AF Class Code or Stock No.	Part Number	Army Source Code	Figure and Index No.	Qty per Article	Micro-film Index
	42S8467-5	X1	18,18A	2	R080
	42S8467-6	X1	18,18A	2	R080
	42S8467-7	M	18-10, 18A-10	2	R080
	42S8467-8	M	18-11, 18A-11	2	R080
1AGJ	42S8467-9	M	18-14, 18A-14	2	R080
1AGJ	42S8468-1	P	18,18A	2	K492
	42S8468-3		18-15	1	K492
	42S8469-1	X1	18-16 18A-16	2	K493
	42S8469-2	X1	18,18A	2	K493
	42S8473-68		16	2	R081,
	42S8473-69		16	2	R082
1AGJ	42S8478-1	*	18A	1	H358
1AGJ	42S8479-1	P	18A-29	2	K495
1AGJ	42S8480-1	P	18A	2	G030
1AGJ	42S8481-1	P	18A	2	K496
1AGJ	42S8483-1	*	18A	1	K497
	42S8483-2	P1	18A	1	K497
	42S8483-3	M	18A	2	K497
	42S8483-5	A	18A-31	2	K497
	42S8483-6	M	18A	2	K497
	42S8484-1	M	18A-50A	1	G031
1AGJ	42S8484-2	M	18A-24	1	G031
	42S8495-1	P	18,18A	1	H360
1AGJ	42S8496-1	P	18,18A	1	H361
	42S8497-1	P	18, 18A-48	4	G036
	42S8500-1		17	1	
	42S8500-2		17	1	
	42S8501-1		18A	2	K498
	42S8511-1	M	18-18A, 18A-18A	2	G038
1AGJ	42S8518-1	P	18A	1	K503
	42S8526-3		8	1	V13,
	42S8526-4		8	1	V14
	42S9328-1		15-16	26	T103
	42S9400-1	*	8	1	
	42S9400-2	A1	8	1	
	42S9400-6	A1	8	1	
	42S9402-1	*	8	1	V15
	42S9403-1	*	8	1	V16
	42S9404-1	*	8	1	R090
	42S9405-1	*	8	1	R091
	42S9406-1	*	8	1	R092, R093
	42S9407-1	*	8	1	V17
	42S9408-1	*	8	1	R095
	42S9410-1	A1	8	1	
	42S9410-11		8	1	
	42S9411-1	A1	8	1	
	42S9411-10		8	1	
	42S9500-1	M	8	1	
	42S9500-2		8	1	
	42S9501-1	A1	8	1	
	42S9501-21		8	1	
	42S9502-1	A1	8	1	
	42S9503-1	A1	8	1	
	42S9504-1	A1	8	1	
	42S9509-1	A1	8	1	
	42S9510-1	A1	8	1	
	42S9511-1	A1	8	1	
	42S9513-1	*	8	1	V18,
	42S9513-2	A1	8	1	V19
	42S9515-1	M	8	2	
	42S9515-2		8	2	
	42S9516-17	A1	8	1	
	42S9516-18	A1	8	1	
	42S9516-19	M	8	1	
	42S9516-20		8	1	
	42S9516-21	A1	8	1	
	42S9516-22		8	1	
	42S9516-23		8	1	
	42S9516-57		8	1	
	42S9516-58		8	1	
	42S9516-59		8	1	
	42S9516-60		8	1	
	42S9516-61		8	1	
	42S9516-62		8	1	
	42S9516-64		8	1	
	42S9517-2	M	8	1	
	42S9517-3	M	8	1	
	42S9517-32		8	1	
	42S9517-33		8	1	
	42S9517-34		8	1	
	42S9517-4	A1	8	1	
	42S9518-1	*	8	1	R099
	42S9519-1	M	8	1	
	42S9519-2		8	1	
	42S9520-1	A1	8	1	
	42S9520-2	A1	8	1	
	42S9520-25		8	1	
	42S9520-26		8	1	
	42S9522-1	M1	8	1	
	42S9523-1	*	8	1	R100
	42S9524-1	*	8	1	R101
	42S9525-2	A1	8	1	
	42S9526-1	A1	8	1	
	42S9526-2		8	1	
	42S9529-1	A1	8	1	
	42S9529-66		8	1	
	42S9530-1	*	8	1	
	42S9530-2	*	8	1	
	42S9543-1	*	15	1	
	42S9543-237		15	1	
	42S9548-1	*	8	1	
	42S9548-3	A1	8	1	
	42S9548-33		8	1	
	42S9554-1	*	8	1	
	42S9554-3	M1	8	1	
	42S9554-81		8	1	
	42S9554-88		8	1	
	42T1001-1	*	6	2	V20
1AGJ	42T1001-102	P1	6	2	V20
	42T1001-2		6	2	V20
	42T3003-1	*	6A	1	R113,
	42T3003-35		6A	1	R114
	42T3004-1	A1	6A	1	
	42T3005-1	*	6A	1	
	42T3005-2	*	6A	1	
	42T3005-23	A1	6A	1	
	42T3005-24	A1	6A	1	
	42T3068-1		6	2	K534
	42T3068-2		6	2	K534
1AGJ	42T3068-3	P1	6-9	2	K534
1AGJ	42T3068-4	P1	6	2	K534
	43E0001	*	74	1	
	43E1175-15		81	1	
	43E2000-1	*	77	1	U111
	43E2005-1	*	81	1	U112
	43E2005-4	M	81	1	U112
	43E2005-8		81	1	U112
	43E2005-9		81	1	U112
	43E2006-1	*		1	
	43E2036-6			1	
	43E2038-1	*	81	1	N033
	43E2038-2	A	81	1	N033
	43E2038-3	A	81-43	1	N033
	43E2038-6	*	81	1	N033
	43E2053-2	M1		1	T347,
	43E2053-4	M1		1	T348
	43E2060-1		78C-7	1	U113
	43E2060-2		78C-34	1	U113
	43E2060-3		78C-27	1	U113
	43E2060-4		78C-26	1	U113
	43E2060-5		78C	1	U113

AF Class Code or Stock No.	Part Number	Army Source Code	Figure and Index No.	Qty per Article	Micro-film Index
	43E2061-1	M1		1	E548
	43E2061-2	M1		1	E548
	43E2072-1	A	78B	1	U114
	43E2072-14		78C	1	U114
	43E2072-15		78C	1	U114
	43E2074-3		77	1	T350
	43E2099-1	M1		1	
	43E2100-1	A	81-20	1	J482
	43E2100-2	A		1	J482
	43E2100-3	M		1	J482
	43E2100-4	A	81	1	J482
	43E2117-1		78B	1	J483
	43E2123-1	A	81	1	T351
	43E2123-3		81	1	T351
	43E2123-4		81	1	T351
	42E2125-1	A	81	1	G478
1AGJ	43E2126-1	P	81	1	G479
	43E2127-1	A	81	1	G480
	43E2149-1		78C	1	J485
	43E2150-1		78C	1	G481
	43E2151-1		78C	1	G482
	43E2152-1		78C	1	J486
	43E2152-2		78C	1	J486
	43E2153-1		78C	1	G483
	43E2154-1		78C	1	G484
	43E2155-1		77	1	J487
	43E2155-2		77	1	J487
	43E2155-3		77	2	J487
	43E2156-1		78C	1	G485
	43E2204-1		77	1	J497
	43E2221-3		81	1	T356
	43E3001-1	*	86	1	N037
	43E3001-2	M		5	N037
	43E3004-1	*	86	1	M038, M039
	43E3006-1	*	86	1	J498
	43E3006-2		86	1	J498
	43E3007-1	*	86	1	N040
	43E3011-1	*	86	1	J499
	43E3011-2	*	86	1	J499
	43E3011-3	M	86	2	J499
	43E3011-4	M1		2	J499
	43E3012-1		86	1	J500
	43E3012-2	M		AR	J500
	43E3013-1		86-50	1	T357
	43E3014-1		86	1	N041
	43E3014-2	M		2	N041
	43E3014-3	*	86	1	N041
	43E3017-1	*	86	1	N042
	43E3017-2		86	1	N042
	43E3019-1		81-29	1	G486
	43E3020-1		81	1	G487
	43E3021-1		81	1	E549
	43E3023-3		86	1	N043
	43E3024-1	*	86	1	J501
	43E3025-1		86	1	U115
	43E3027-1	*	86	1	N045
	43E3027-3		86	1	N045
	43E3027-4		86	1	N045
	43E3029-1		81-29A	1	G488
	43E4030-1		81	1	G489
	43E4031-1		81	1	G490
1AGJ	43E3032-1	P	86-43	2	E550
	43E3034-1	M	86	2	
1AGJ	43E3035-1	P	86-44	2	F001
	43E3047-1	*	86	1	J502
	43E3049-2		86	1	
	43E3056-1	*		1	N047, N048
	43E3065-1	*	86	1	J503
	43E3065-2	M	86	1	J503
	43E3066-1		86	1	T359
	43E3066-3		86	1	T359
	43E3067-1		78C	1	T179

AF Class Code or Stock No.	Part Number	Army Source Code	Figure and Index No.	Qty per Article	Micro-film Index
	43E3068-1		78C	1	T180
	43E3069-1		78C	1	
	43E3070-1		78C	1	
	43E3093-1		86-34	1	N049
	43E3039-2	*	86	1	N049
	43E3100-1	*	86	1	N050
	43E3101-1	*	86	2	N051
	43E3101-2	A		1	N051
	43E3101-3	M1		1	N051
	43E3101-4	M1		1	N051
1AGJ	43E3103-1	P	81	2	G491
1AGJ	43E3104-1	P		1	J510
1AGJ	43E3104-2	P1		1	J510
	43E3106-1	M		2	G492
	43E3106-2	M		8	G492
	43E3106-3	M		1	G492
	43E3106-4	M1		2	G492
	43E3106-5	M		8	G492
	43E3106-6	M		1	G492
	43E3106-7	M		12	G492
	43E3107-1		86	1	
	43E3200-1	*		1	
	43E3200-2	A		1	
1AGJ	43E3208-1	P		1	
	43E3210-2	M1		1	J515
	43E3210-4	M1		1	J515
	43E3211-2	A		1	J516
	43E3216-2	M		2	F002
	43E3216-3	M		1	F002
	43E3222-1		86-51	1	
	43E3222-3		86	1	
	43E3222-4		86	1	
	43E3225-1	M1		1	
	43E3225-2	M1		1	
	43E3230-1	*		1	N052
	43E3230-2	M1		1	N052
	43E3230-3	M1		1	N052
	43E3230-4	M1		1	N052
	43E3230-5	M1		1	N052
	43E3230-6	M1		1	N052
	43E3230-7	M1		1	N052
	43E3230-8	M1		1	N052
	43E3230-9	M1		1	N052
	43E3232-1		86	1	N053
	43E3233-1	A	86	1	J517
1AGJ	43E3234-1	P	86-48	1	N054
	43E4200-1		74B	1	
	43E4200-10		74B	1	
	43E4200-11		74B	1	
	43E4200-12		74B	1	
	43E4200-13		74B	1	
	43E4200-14		74B	1	
	43E4200-15		74B	1	
	43E4200-16		74B	1	
	43E4200-17		74B	1	
	43E4200-18		74B	1	U118,
	43E4200-19		74B	1	U119,
	43E4200-20		74B	1	U120,
	43E4200-21		74B	1	U121,
	43E4200-22		74B	1	U122,
	43E4200-23		74B	1	U123,
	43E4200-24		74B	1	U124,
	43E4200-25		74B	1	U125
	43E4200-26		74B	1	
	43E4200-27		74B	1	
	43E4200-28		74B	1	
	43E4200-29		74B	1	
	43E4200-3		74B	1	
	43E4200-30		74B	1	
	43E4200-31		74B	1	
	43E4200-32		74B	1	
	43E4200-33		74B	1	
	43E4200-34		74B	1	

AF Class Code or Stock No.	Part Number	Army Source Code	Figure and Index No.	Qty per Article	Micro-film Index
	43E4200-35		74B	1	
	43E4200-36		74B	1	
	43E4200-4		74B	1	U118,
	43E4200-41		74B	1	U119,
	43E4200-42		74B	1	U120,
	43E4200-43		74B	1	U121,
	43E4200-49		74B	1	U122,
	43E4200-5		74B	1	U123,
	43E4200-50		74B	1	U124,
	43E4200-6		74B	1	U125
	43E4200-7		74B	1	
	43E4200-8		74B	1	
	43E4200-9		74B	1	

AF Class Code or Stock No.	Part Number	Army Source Code	Figure and Index No.	Qty per Article	Micro-film Index
	43E7001-1		91	1	
	43E7001-10		93-79	1	
	43E7001-11		93-80	1	
	43E7001-12		93-81	1	
	43E7001-13		93-82	1	
	43E7001-16		93-68	1	
	43E7001-17		93-67	1	U126,
	43E7001-2		93-69	1	U127,
	43E7001-3		93-70	1	T376
	43E7001-4		93-73	1	
	43E7001-5		93-74	1	
	43E7001-6		93-75	1	
	43E7001-7		93-76	1	
	43E7001-8		93-77	1	
	43E7001-9		93-78	1	
	63D3054-1		44	1	

T.O. 1H-21(Y)-2
(FORMERLY AN 01-250HDA-2)

HANDBOOK
MAINTENANCE INSTRUCTIONS

USAF SERIES
YH-21, H-21A & H-21B
AND
ARMY MODEL
H-21C
HELICOPTERS

REVISION NOTICE

LATEST REVISED PAGES SUPERSEDE THE SAME PAGES OF PREVIOUS DATE
Insert revised pages into basic publication. Destroy superseded pages.

PUBLISHED UNDER AUTHORITY OF THE SECRETARY OF THE AIR FORCE
AND THE CHIEF OF THE BUREAU OF AERONAUTICS

R13

Vertol Aircraft Corp., Morton, Pa.—4825—3-31-57

15 JUNE 1954
REVISED 15 FEBRUARY 1957

Reproduction for non-military use of the information or illustrations contained in this publication is not permitted without specific approval of the issuing service (BuAer or USAF). The policy for use of Classified Publications is established for the Air Force in AFR 205-1 and for the Navy in Navy Regulations, Article 1509.

LIST OF REVISED PAGES ISSUED

INSERT LATEST REVISED PAGES. DESTROY SUPERSEDED PAGES.

NOTE: The portion of the text affected by the current revision is indicated by a vertical line in the outer margins of the page.

Page No.	Date of Latest Revision
* B	15 February 1957
* C	15 February 1957
* D	15 February 1957
* i	15 February 1957
iv	15 February 1956
* v	15 February 1957
vi	15 February 1956
* vii	15 February 1957
viii	15 August 1956
ix	15 August 1956
x	15 August 1956
xi	15 November 1956
xii	15 August 1956
1	15 November 1956
2	15 May 1956
2A	15 May 1956
* 3	15 February 1957
4	15 November 1956
4A	15 November 1956
5	15 November 1956
6	15 August 1955
6A	15 August 1955
6B	15 August 1956
7	15 August 1956
8	15 November 1956
8A	15 November 1956
8B	15 August 1956
8C	15 August 1956
9	15 November 1956
10	15 August 1955
10A	15 November 1956
10B	15 November 1956
* 10C	15 February 1957
10D	15 November 1956
10E	15 November 1956
10F	15 November 1956
11	15 November 1956
12	15 November 1956
12A	15 November 1955
12B	15 November 1956
* 12C	15 February 1957
12D	15 November 1955
13	15 November 1955
14	15 August 1956
14A	15 November 1956
14B	15 November 1955
* 14C	15 February 1957
14D	15 November 1956
15	15 May 1956
16	15 May 1956
17	15 August 1956
18	15 August 1955
18A	15 August 1955
* 18B	15 February 1957
* 18C	15 February 1957
* 19	15 February 1957
20	15 November 1956
21	15 November 1956
22	15 November 1956
22A	15 November 1956
23	15 November 1956
24	15 November 1956
24A	15 December 1954
24B	15 December 1954
24C	15 November 1956
24D	15 May 1956
25	15 August 1955
26	15 August 1956
27	15 February 1956
28	15 November 1956
29	15 February 1956
30	15 February 1956
30A	15 August 1956
30B	15 November 1956
31	15 November 1956
32	15 November 1956
* 33	15 February 1957
34	15 November 1956
34A	15 November 1956
34B	15 November 1956
35	15 November 1956
36A	15 November 1956
36B	15 August 1955
38A	15 August 1956
38B	15 September 1954
38C	15 September 1954
38D	15 September 1954
38E	15 September 1954
38F	15 May 1956
38G	15 September 1954
38H	15 May 1956
38J	15 May 1956
38K	15 May 1956
38L	15 May 1956
38M	15 May 1956
38N	15 May 1956
38P	15 May 1956
38Q	15 May 1956
38R	15 May 1956
* 39	15 February 1957
40	15 August 1956
41	15 February 1956
42	15 February 1956
42A	15 November 1956
* 42B	15 February 1957
43	15 August 1956
* 44	15 February 1957
* 44A	15 February 1957
* 44B	15 February 1957
* 45	15 February 1957
* 46	15 February 1957
46A	15 November 1956
47	15 May 1956
48	15 August 1956
48A	15 November 1956
49	15 November 1956
* 50	15 February 1957
* 51	15 February 1957
52	15 May 1956
52A	15 August 1956
52B	15 August 1956
53	15 May 1956
* 54	15 February 1957
* 54A	15 February 1957
54B	15 December 1954
55	15 December 1954
56	15 February 1956
57	15 August 1956
58	15 November 1956
58A	15 November 1956
59	15 November 1955
60	15 August 1955
61	15 November 1955
62	15 November 1955
63	15 November 1955
64	15 August 1955
65	15 August 1955
66	15 August 1956
67	15 August 1955
68	15 November 1956
69	15 November 1956
70	15 August 1956
71	15 August 1956
72	15 August 1956
72A	15 August 1956
73	15 November 1956

* The asterisk indicates pages revised, added or deleted by the current revision.

USAF

ADDITIONAL COPIES OF THIS PUBLICATION MAY BE OBTAINED AS FOLLOWS:

USAF ACTIVITIES.—In accordance with Technical Order No. 00-5-2.

NAVY ACTIVITIES.—Use Publications and Forms Order Blank (NavAer 140) and submit in accordance with instruction listed thereon.

For listing of available material and details of distribution see Naval Aeronautics Publications Index NavAer 00-500.

LIST OF REVISED PAGES ISSUED

Page No.	Date of Latest Revision
74	15 September 1954
* 74A	15 February 1957
74B	15 November 1956
75	15 August 1955
76	15 August 1956
76A	15 November 1956
76B	15 August 1956
76C	15 November 1956
77	15 November 1956
78	15 August 1956
79	15 August 1956
80	15 August 1955
80A	15 August 1956
80B	15 August 1956
* 81	15 February 1957
* 82	15 February 1957
83	15 August 1955
84	15 August 1955
84A	15 November 1956
85	15 November 1956
86	15 November 1956
86A	15 November 1956
86B	15 November 1956
86C	15 August 1955
86D	15 August 1955
86E	15 August 1955
86F	15 August 1955
86G	15 August 1955
86H	15 September 1954
87	15 September 1954
88	15 August 1956
89	15 August 1956
90	15 August 1955
91	15 August 1955
92	15 November 1956
92A	15 September 1954
92B	15 November 1955
92C	15 November 1956
94	15 August 1955
95	15 November 1956
96	15 November 1956
96A	15 November 1956
96B	15 February 1956
97	15 February 1956
98	15 November 1956
99	15 February 1956
100	15 November 1956
100A	15 August 1956
101	15 November 1956
102	15 August 1956
102A	15 May 1956
102B	15 May 1956
102C	15 May 1956
102D	15 May 1956
102E	15 May 1956
102F	15 May 1956
102G	15 May 1956
102H	15 May 1956
102J	15 May 1956
102K	15 November 1956
103	15 May 1956
104	15 May 1956
104A	15 May 1956
104B	15 May 1956
104C	15 May 1956
104D	15 May 1956
104E	15 May 1956
104F	15 May 1956
104G	15 May 1956
104H	15 November 1956
104J	15 May 1956
104K	15 May 1956
105	15 May 1956
106	15 November 1956
106A	15 February 1956
106B	15 February 1956
107	15 February 1956
108	15 August 1955
*108A	15 February 1957
109	15 November 1956
*110	15 February 1957
*111	15 February 1957
*112	15 February 1957
*113	15 February 1957
*114	15 February 1957
*114A	15 February 1957
*114B	15 February 1957
115	15 November 1955
116	15 August 1955
117	15 November 1955
*118	15 February 1957
118A	15 November 1955
*119	15 February 1957
*120	15 February 1957
*121	15 February 1957
*122	15 February 1957
*122A	15 February 1957
*122B	15 February 1957
123	15 November 1956
124	15 September 1955
*124A	15 February 1957
124B	15 August 1956
125	15 August 1956
*126	15 February 1957
126A	15 August 1956
126B	15 August 1955
126C	15 August 1956
*126D	15 February 1957
126E	15 September 1954
126F	15 August 1956
126G	15 August 1956
126H	15 August 1956
127	15 August 1956
128	15 September 1954
129	15 August 1956
130	15 November 1956
130A	15 November 1956
130B	15 November 1956
131	15 November 1956
132	15 February 1956
133	15 November 1955
134	15 September 1954
135	15 August 1956
136	15 December 1954
138	15 August 1956
138A	15 February 1956
138B	15 February 1956
138C	15 February 1956
138D	15 February 1956
139	15 February 1956
140	15 February 1956
140A	15 August 1956
*141	15 February 1957
*142	15 February 1957
143	15 September 1954
144	15 September 1954
145	15 August 1956
146A	15 August 1955
147	15 August 1956
148	15 November 1956
149	15 November 1956
150	15 November 1956
150A	15 November 1956
151	15 December 1954
152	15 August 1956
153	15 November 1956
154A	15 November 1956
155	15 August 1956
156	15 August 1956
157	15 November 1956
158	15 August 1956
158A	15 November 1956
158B	15 November 1956
158C	15 November 1956
160	15 May 1956
160A	15 November 1956
160B	15 November 1956
161	15 November 1956
162	15 November 1956
162A	15 December 1954
163	15 December 1954
166	15 May 1956
166A	15 May 1956
166B	15 November 1956
172	15 December 1954
172A	15 November 1956
173	15 November 1956
174	15 November 1956
174A	15 November 1956
174B	15 November 1956
174C	15 November 1956
175	15 November 1956
177	15 August 1956
178	15 November 1956
179	15 May 1956
180	15 November 1956
180A	15 November 1956
180B	15 November 1956
181	15 August 1955
182	15 May 1956
182A	15 May 1956
182B	15 May 1956
182C	15 November 1956
182D	15 November 1956
183	15 November 1956
184	15 November 1956
*185	15 February 1957
*186	15 February 1957
*186A	15 February 1957
*186B	15 February 1957
*186C	15 February 1957
187	15 August 1955
188	15 November 1956
188A	15 November 1956
189	15 November 1956
*190	15 February 1957
*191	15 February 1957
*192	15 February 1957
193	15 September 1954
*194	15 February 1957

* The asterisk indicates pages revised, added or deleted by the current revision.

LIST OF REVISED PAGES ISSUED

Page No.	Date of Latest Revision
*194A	15 February 1957
*194B	15 February 1957
195	15 May 1956
196	15 November 1956
*196A	15 February 1957
197	15 November 1956
198	15 November 1956
198A	15 August 1955
*198B	15 February 1957
199	15 November 1956
200	15 November 1956
201	15 November 1956
202	15 November 1956
202A	15 November 1956
202B	15 November 1956
202C	15 November 1956
202D	15 November 1956
203	15 August 1955
204	15 September 1954
206	15 August 1956
210	15 September 1954
212	15 August 1956
212A	15 August 1956
212B	15 August 1956
212C	15 August 1956
213	15 August 1956
214	15 September 1954
215	15 September 1954
216	15 August 1956
217	15 February 1956
218	15 February 1956
218A	15 November 1956
218B	15 February 1956
218C	15 August 1956
218D	15 November 1956
218E	15 May 1956
218F	15 February 1956
218G	15 November 1956
218H	15 November 1956
218J	15 February 1956
218K	15 November 1956
*218L	15 February 1957
218M	15 November 1956
*218N	15 February 1957
219	15 May 1956
220	15 May 1956
221	15 November 1956
222	15 November 1956
222A	15 November 1956
223	15 November 1956
*224	15 February 1957
225	15 February 1956
226	15 May 1956
227	15 May 1956
228	15 November 1956
228A	15 August 1955
229	15 September 1954
230	15 August 1956
231	15 August 1956
232	15 February 1956
233	15 May 1956
234	15 November 1956
235	15 November 1956
*236	15 February 1957
*236A	15 February 1957
*237	15 February 1957
238	15 November 1956
238A	15 May 1956
239	15 November 1956
240	15 May 1956
240A	15 May 1956
240B	15 May 1956
240C	15 May 1956
241	15 August 1955
242	15 August 1955
242A	15 May 1956
242B	15 August 1955
242C	15 August 1955
242D	15 May 1956
242E	15 August 1955
*242F	15 February 1957
242G	15 November 1956
242H	15 November 1956
243	15 November 1956
244	15 November 1956
244A	15 November 1956
245	15 November 1956
246	15 May 1956
247	15 August 1955
248	15 May 1956
249	15 November 1956
250	15 September 1954
250A	15 August 1956
*250B	15 February 1957
250C	15 November 1956
250D	15 November 1956
251	15 November 1956
252	15 November 1956
252A	15 November 1956
252B	15 August 1955
252C	15 August 1956
253	15 November 1956
254	15 August 1955
254A	15 August 1955
254B	15 December 1954
254C	15 February 1956
254D	15 December 1954
255	15 May 1956
*256	15 February 1957
*256A	15 February 1957
257	15 November 1956
258	15 August 1956
*258A	15 February 1957
258B	15 November 1956
*259	15 February 1957
260	15 February 1956
260A	15 August 1956
*260B	15 February 1957
*261	15 February 1957
*262	15 February 1957
*262A	15 February 1957
263	15 May 1956
264	15 May 1956
264A	15 November 1956
264B	15 November 1956
265	15 November 1956
266	15 November 1956
267	15 August 1956
268	15 December 1954
269	15 November 1956
270	15 August 1956
*270A	15 February 1957
*270B	15 February 1957
271	15 November 1956
272	15 August 1956
273	15 August 1955
274	15 August 1956
*275	15 February 1957
276	15 August 1955
276A	15 May 1956
276B	15 February 1956
*277	15 February 1957
*278	15 February 1957
278A	15 August 1956
279	15 August 1956
280	15 August 1956
281	15 August 1956
282	15 November 1956
*282A	15 February 1957
283	15 August 1956
284	15 August 1956
*284A	15 February 1957
*284B	15 February 1957
284C	15 August 1956
284D	15 February 1956
284E	15 May 1956
284F	15 February 1956
284G	15 May 1956
*284H	15 February 1957
*284J	15 February 1957
*284K	15 February 1957
285	15 February 1956
286	15 February 1956
286A	15 February 1956
286B	15 February 1956
286C	15 February 1956
286D	15 February 1956
287	15 February 1956
288	15 August 1956
289	15 August 1956
*290	15 February 1957
*291	15 February 1957
*292	15 February 1957
*292A	15 February 1957
293	15 May 1956
*294	15 February 1957
*294A	15 February 1957
*295	15 February 1957
296	15 May 1956
*297	15 February 1957
298	15 May 1956
299	15 August 1955
300	15 February 1956
300A	15 February 1956
301	15 May 1956
302	15 November 1956
303	15 December 1954
304	15 September 1954
305	15 August 1955
306	15 August 1956
307	15 August 1956
308	15 May 1956
309	15 August 1956
310	15 September 1954
311	15 February 1956
312	15 May 1956
313	15 September 1954
314	15 September 1954
314A	15 September 1954

* The asterisk indicates pages revised, added or deleted by the current revision.

TABLE OF CONTENTS

Par.		Page
SECTION I GENERAL INFORMATION		
1-1.	Description	1
1-6.	Helicopter Dimensions	2
1-12.	Access and Inspection Provisions	4
1-30.	Ground Handling	4A
1-49A.	Field Expediency Substitutes for Standard Maintenance Procedures and Techniques	10E
1-54.	Blade Tracking	12
1-62.	Servicing	17
1-87.	Lubrication Requirements	25
1-92.	Special Tools and Equipment	30B
1-96.	Preservation and Packaging	36A
SECTION II ROTOR AND AIRFRAME GROUPS		
2-1.	Troubleshooting	40
2-5.	Rotor Group	41
2-50.	Flight Controls	54
2-131.	Flight Controls Rigging Procedure	81
2-173.	Fuselage	95
2-210A.	Fuselage Transportability	102C
2-211.	Tail Surfaces	104J
2-221.	Fuselage Equipment	106
2-268.	Alighting Gear	115
SECTION III HYDRAULIC SYSTEMS		
3-1.	Hydraulic Brake System	129
3-7.	Rescue Hoist System	130
3-35.	Hydraulic Flight Control System	136
SECTION IV UTILITY SYSTEMS		
4-1.	Heating and Ventilating	143
4-11.	Fire Detection System	146A
4-14.	Windshield Wiper System	147
SECTION V POWER PLANT AND TRANSMISSIONS		
5-1.	Power Plant	149
5-2.	Engine Package	149
5-52.	Power Plant Maintenance	160
5-118.	Power Plant Control System	180
5-140.	Power Plant Controls Rigging Procedure	182B
5-159.	Power Plant Ignition and Starting System	186
5-170.	Power Plant Cooling System	186A
5-185.	Power Plant Fuel System	192
5-229.	Power Plant Lubrication System	201
5-278.	Transmission System	213
5-310.	Transmission Lubrication System	227
5-359.	Drive Shafting	235
5-376.	Rotor Blade Phasing	238
SECTION VI INSTRUMENTS		
6-1.	Instrument Panel	239
6-7.	Flight Instruments	241
6-41.	Engine and Transmission Instruments	242E
6-63.	Transmitting Units	244
6-78.	Pitot Static System	245
6-81.	Manifold Pressure System	245
6-85.	Automatic Pilot	245
SECTION VII ELECTRICAL SYSTEMS		
7-1.	Electrical Power Distribution	249
7-6.	Electrical System—Direct Current	250B
7-26A.	Electrical System—Emergency Circuit	254C
7-27.	Electrical System—Alternating Current	256
7-40.	Lighting System	257
SECTION VIII RADIO AND RADAR		
8-1.	Communication Equipment	262
8-3.	AN/ARN-6 Radio Compass	262
8-19.	AN/ARA-8A Homing Adapter	265
8-33.	AN/ARC-3 VHF Command Radio	268
8-54.	AN/ARC-27 UHF Command Radio	269
8-71A.	AN/ARC-55 UHF Command	270A
8-72.	AN/ARN-14 Radio Navigation	271
8-92.	USAF Combat Interphone	273
8-100.	AN/ARN-30 Radio Navigation	275
8-135A.	AN/ARN-30A Radio Navigational System	278
8-136.	ARC Type 12 Radio System	278
8-166.	AN/AIC-10 Interphone	282
8-181.	AN/ARA-26 Control Keyer	284A
8-187.	PRC-8, -9 or -10 Liaison Set	284A
8-196.	USAF Combat Interphone (Complex)	284B
8-210.	AN/ARC-44 Radio System	284D
8-236.	AN/ARC 12 Marker Beacon Receiving Set	284F
8-248.	AN/ARA-31 Homing Adapter	284H
SECTION IX ARMAMENT AND PHOTOGRAPHIC		
9-1.	Deflector Plate Kits	286
SECTION X WIRING DATA		
10-1.	Introduction	287
10-3.	Wiring Identification Code	287
10-5.	Manufacturers' Code and Equipment List	287
10-7.	Electrical and Electronic Wire Lengths	287
Index to Wiring Diagrams		294

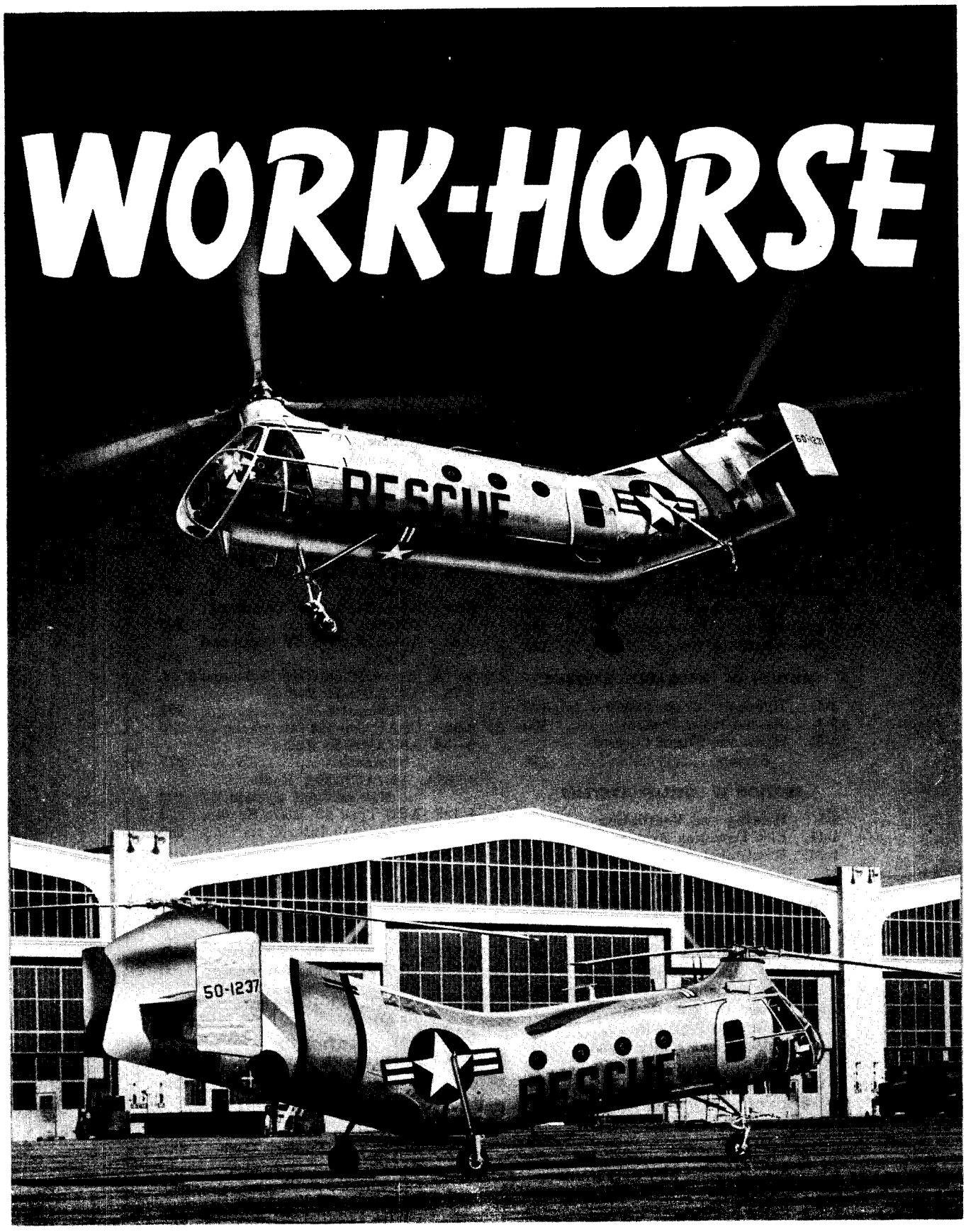

Figure 1. YH-21 Helicopter

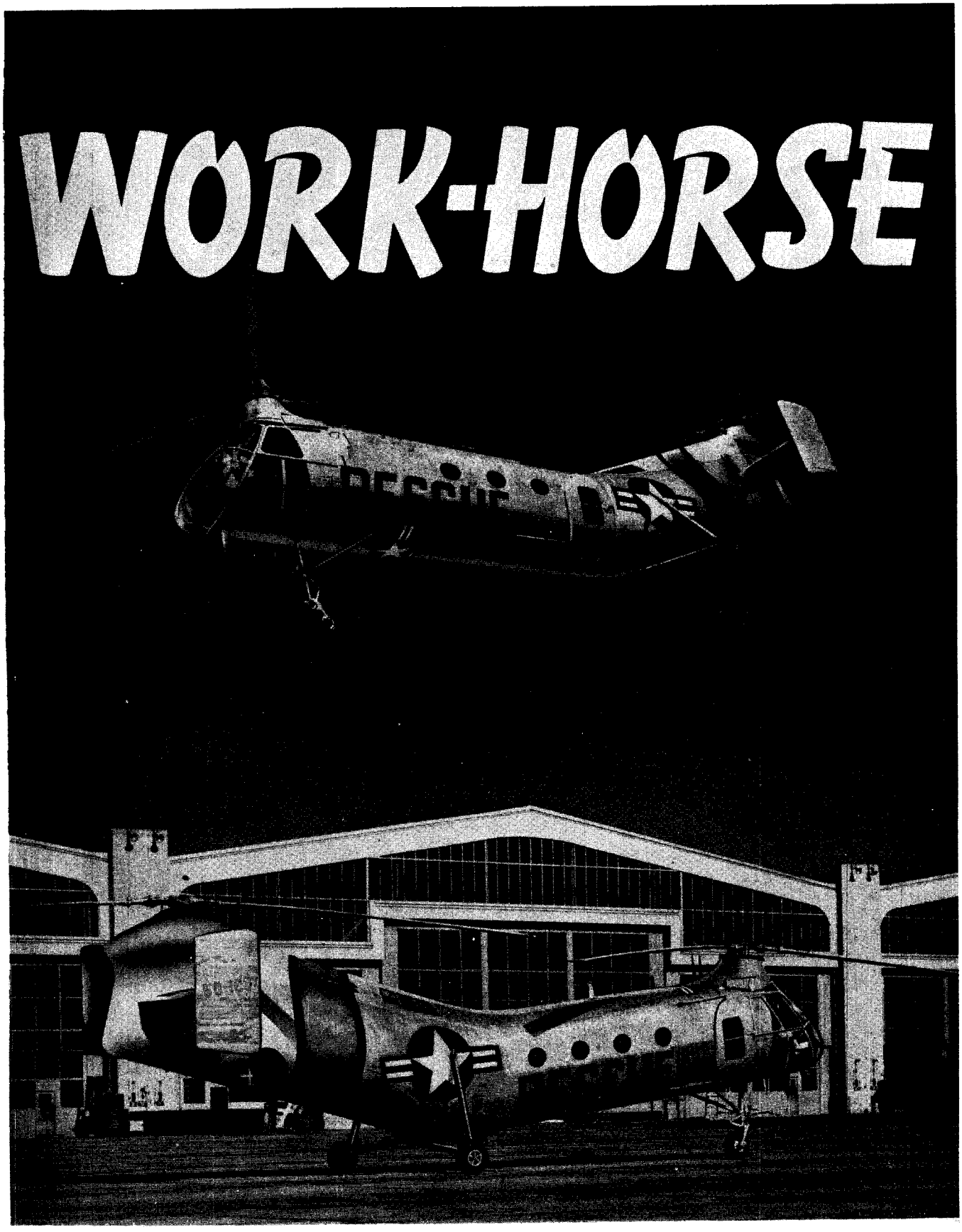

Figure 2. H-21A Helicopter

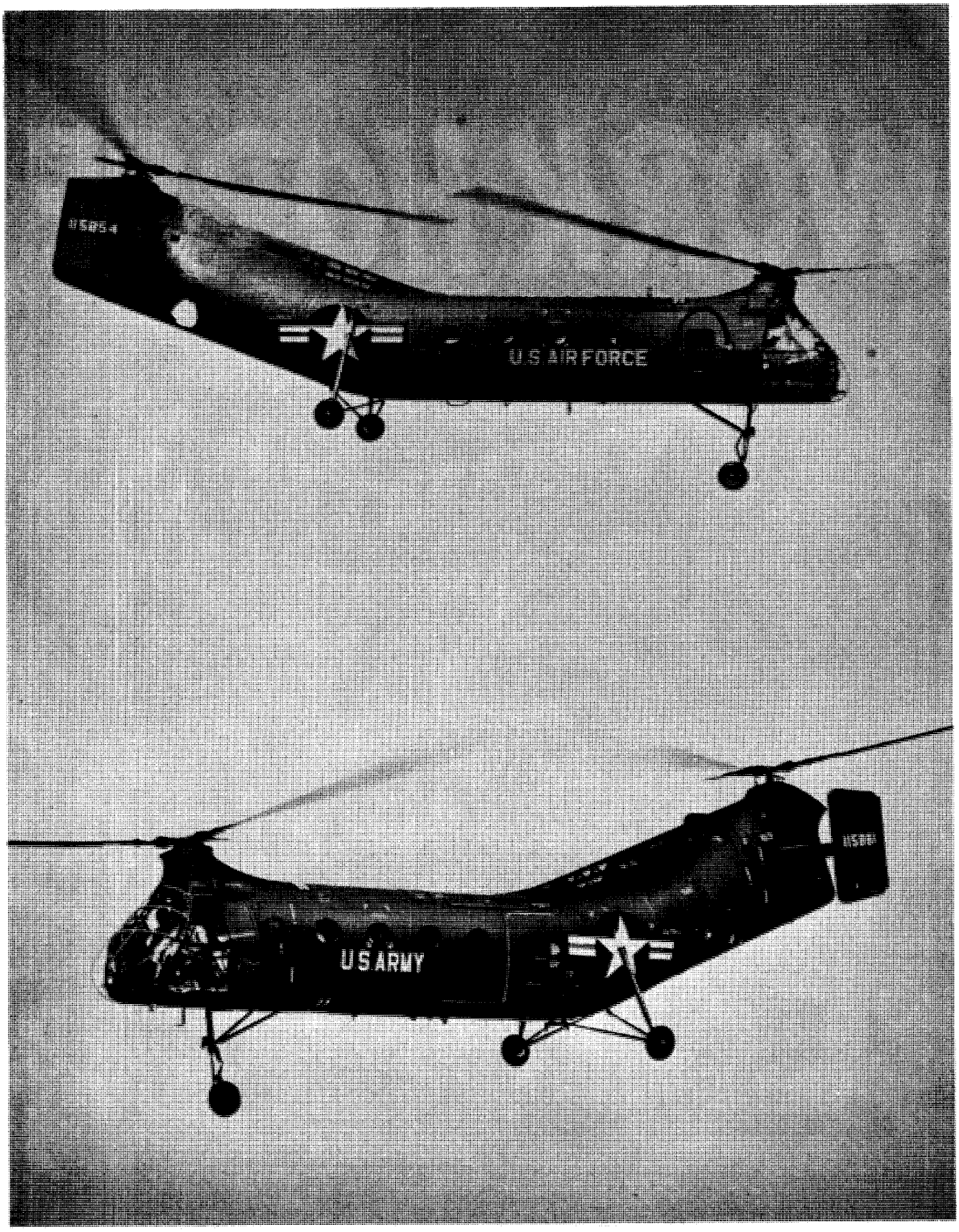

Figure 3. H-21B and H-21C Helicopters

INTRODUCTION

GENERAL. The purpose of this handbook is to provide essential information to service and maintain the H-21 series helicopters. The book is divided into ten sections. These are listed in the Table of Contents together with the location of the first page of each section. A table of contents for each section, listing the primary paragraph headings with initial page numbers, is given on the first page of each section. An alphabetical index is provided in the back of the book for locating specific items within the sections.

MODEL EFFECTIVITY. As revisions are made to this handbook to incorporate engineering and production changes, the applicability of equipment or instructions to certain helicopters will be identified by superior numbers (') throughout the text. When a superior number appears, a corresponding note is supplied at the bottom of the page, listing the helicopters by serial numbers to which particular equipment or instruction is applicable.

1 Forward Rotor Hub
2 Rainshield
3 Forward Rotor Transmission
4 Forward Drive Shafts
5 Central Transmission
6 Wooden Rotor Blade
7 Metal Rotor Blade
8 Aft Rotor Hub
9 Aft Rotor Transmission
10 Aft Drive Shafts
11 Engine Drive Shaft
12 Tail Assembly
13 Tail Cone
14 Engine Oil Tank
15 Power Package
16 Main Alighting Gear, H-21A, H-21B & H-21C
17 Main Alighting Gear, YH-21
18 Nose Alighting Gear

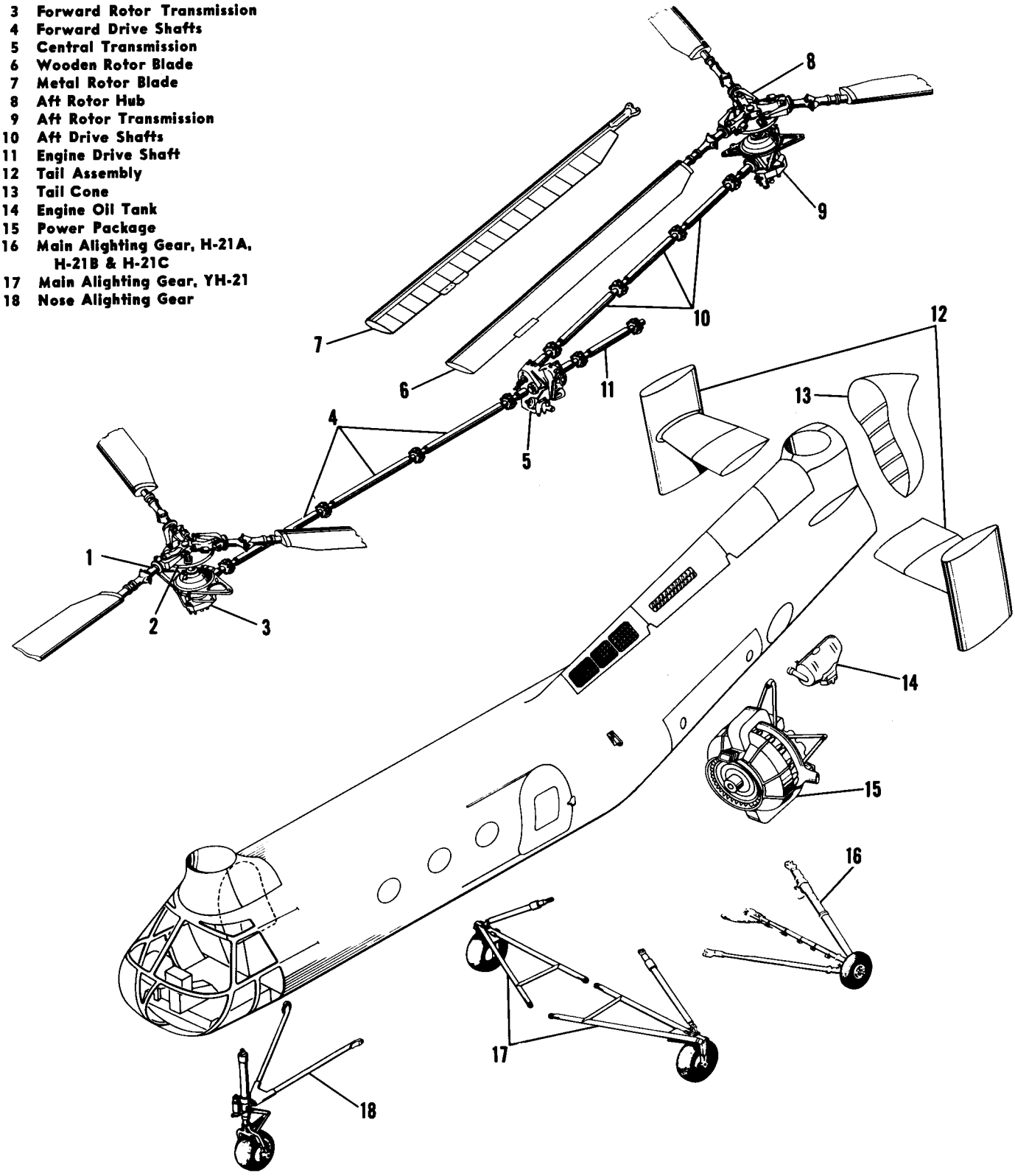

Figure 4. Major Components

MAIN DIFFERENCES

COCKPIT	YH-21	H-21A	H-21B	H-21C
Automatic Pilot	No	No	Yes	No
Fuse Box (on Console)	Yes	Yes	No	No
Fuse Box (behind Co-Pilot)	No	No	Yes	Yes
CARGO/PASS. COMPARTMENT				
Flooring	Wood	Metal	Metal	Metal
Main Entrance Door (Rounded Top)	Yes	Yes	No	No
Main Entrance Door (Rectangular)	No	No	Yes	Yes
Windows	7	7	9	9
Dome Lights	2	3	3	3
Cargo Tie-Down Rings (Fixed)	Yes	Yes	No	No
Cargo Tie-Down Rings (Fixed and Removable)	No	No	Yes	Yes
Auxiliary Fuel System (Internal)	Yes	Yes	Yes	Yes
Passenger Accommodations	14	14	20	20
ENGINE COMPARTMENT				
Air Exit Door	Yes	Yes	No	No
Carburetor Air Filter	No	No	Yes	Yes
Self Sealing Oil Tank	No	No	Yes	Yes
FUSELAGE EXTERIOR				
External Fuel Tanks	No	No	Yes	Yes
Provisions for External Fuel Tanks	No	No	Yes	Yes
Formation Lights	No	No	Yes	Yes
Rotor Blades	Wood	Metal*	Metal*	Metal*
Landing Gear (Straight, Welded Tubing)	Yes	No	No	No
Landing Gear (Extruded, Tapered Tubing)	No	Yes	Yes	Yes

* Wooden blades to be used until metal blades are available.

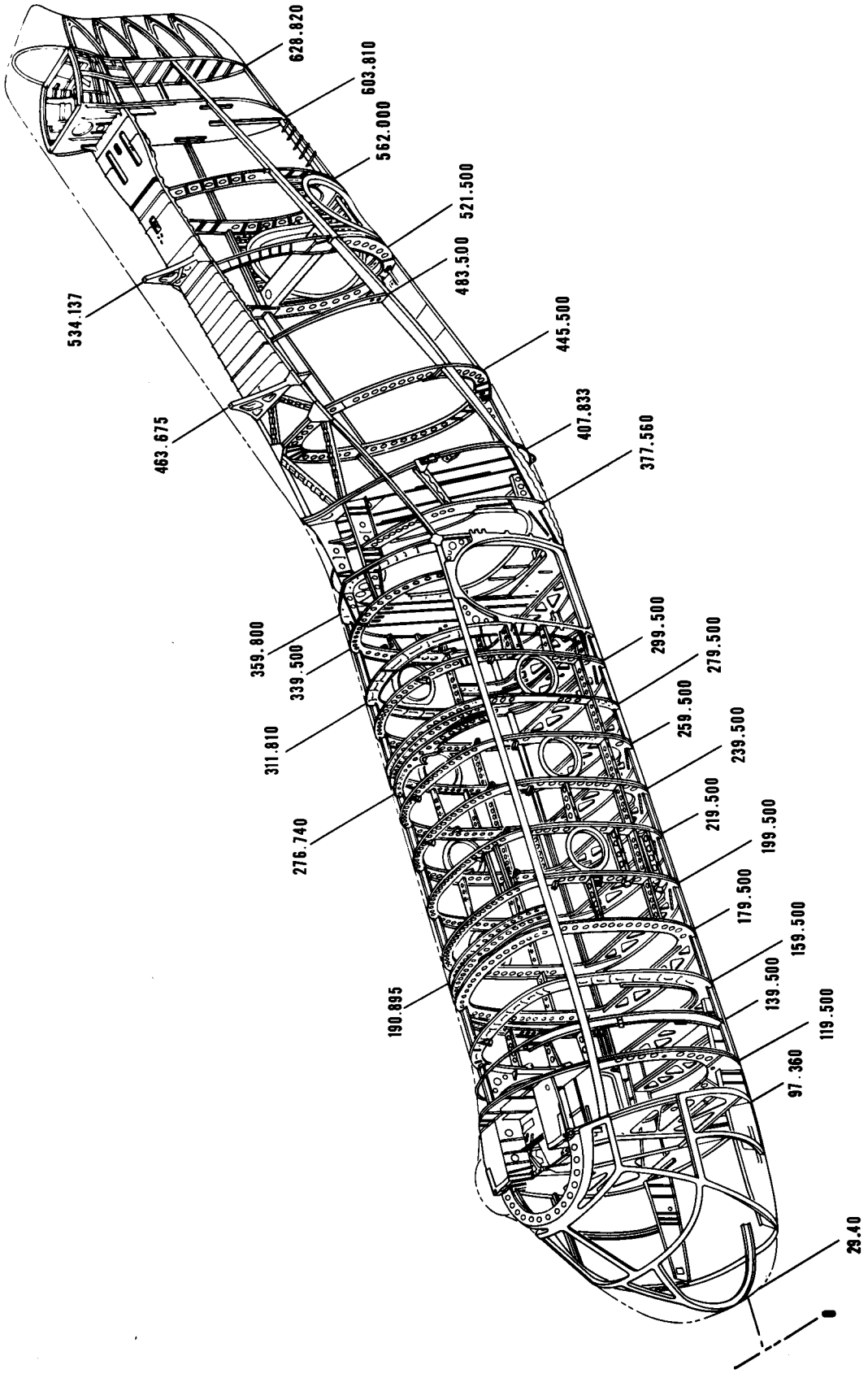

Figure 5. Fuselage Stations, YH-21 and H-21A

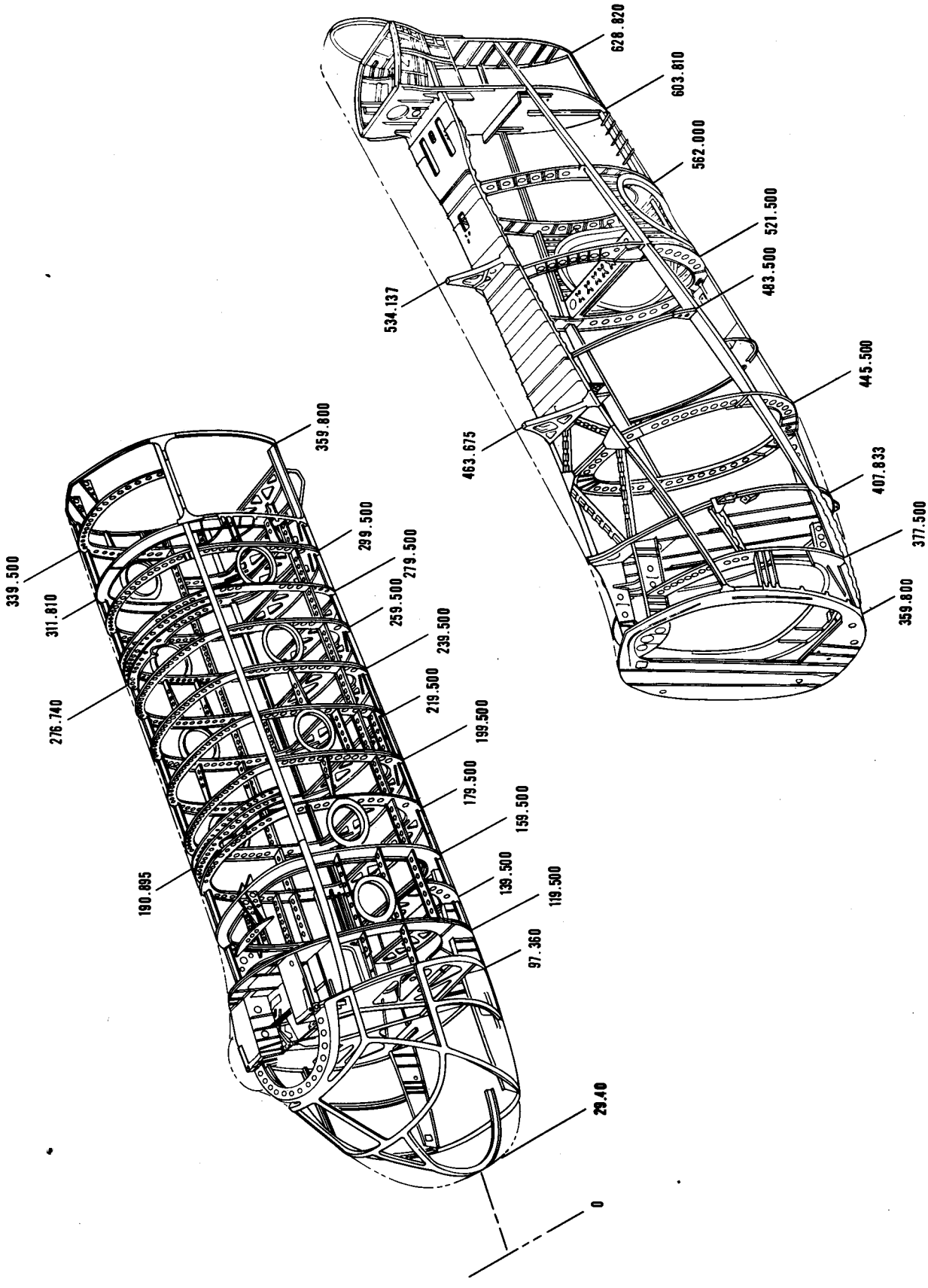

Figure 6. Fuselage Stations, H-21B and H-21C

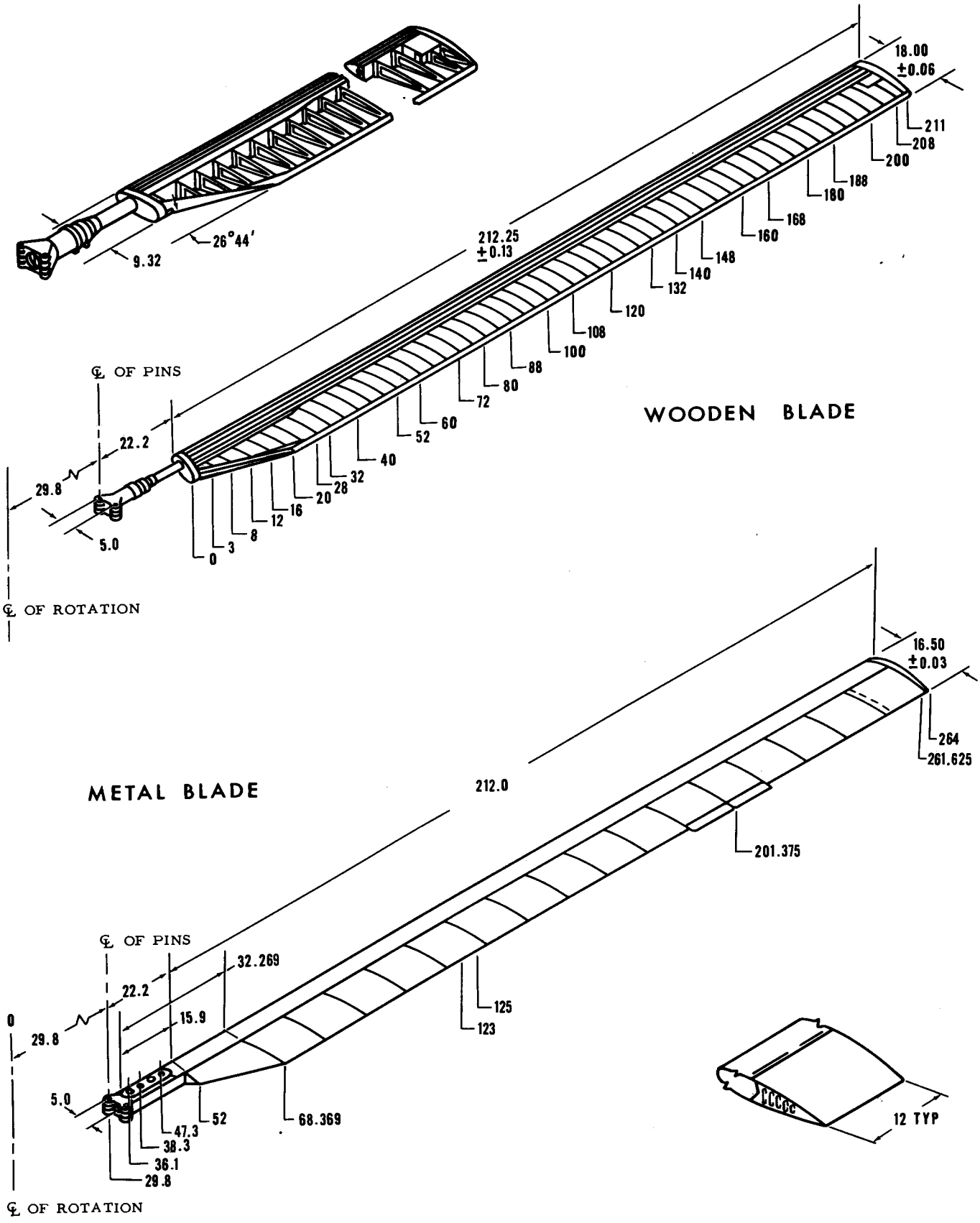

Figure 7. Blade Stations and Dimensions

STRIP LIST—YH-21 & H-21A HELICOPTERS

The following items may be removed to lessen the basic weight of the helicopter.

Cabin Heater
Blower
Soundproofing
Air Exit Doors
Heater Ducting Drive Shaft Cover
Searchlight and Relay
Landing Light and Relay
Fire Extinguisher Installation (1)
Rescue Door and Track
Cabin Door and Track
Pilot and Co-Pilot Sliding Windows
Cabin Flooring
Cargo Tie-Down Fittings
Blackout Curtains
Engine Fire Curtain
Cabin and Cockpit Dome Lights
Map Case
Data Case
Windshield Wiper Installation
Oil Cooler Actuator
Work Platforms
Rheostats and Outlets for Heated Clothing
Rescue Hoist
Hoist Operator's Belt
Troop Seats
Troop Seat Belts and Harnesses
Troop Seat Supports
First Aid Kits (2)
Litter Straps and Supports
Hydraulic Flight Control System
Antenna Installation (22E3005-1)
Automatic Volume Control (C-30/ARA-8A)
Mount (MT473/V)
Control Panel (C-402A/A)
Modulator (MD-34/ARA-8)
Mount (MT282/ARA-8)
Antenna (AS-148/ARA-8)
Antenna Relay (RE-13/ARA-8)
Mount (MT-288/ARA-8A)
Receiver (R-252A/ARN-14)
Mount (MT627/ARN-14)
Dynamotor (DY-66/ARN-14)
Mount (MT-628/ARN-14)
Course Indicator (ID-249/ARN-14)
Control Panel (C760/A)
Antenna (AT-172/ARN-14)
Transformer (TF-127/U)
Mount (MT274/ARN-6)
Coupling Unit (CO-65/ARN-6)
Sens Antenna (22E3007)

STRIP LIST—H-21B & H-21C HELICOPTERS

The following items may be removed to lessen the basic weight of the helicopter.

Cargo Tie Down Devices (AIA) (6)
Cargo Tie Down Fittings (Side and Floor—Removable)
Sound Proofing and Insulation
Litter-Straps and Containers
Removable Provisions for Litters
Removable Heater Components
Safety Belts C-3 (20)
Blackout Curtains
Troop Seats—3-Man (6)
Troop Seats—2-Man (1)
Auxiliary Fuel System—Removable
Troop Seat Supports
Rescue Door and Jettison Mechanism
Entrance Door and Jettison Mechanism
Cargo Side Fittings Provisions
Search Light
Landing Light
Hoist Operator's Safety Belt
Door Safety Straps and Fittings
Data Case
Fire Extinguishers and Brackets (1)
Map Case
First Aid Kits (3)
Container (Cargo Tie Down Equipment)
Pilot's and Co-Pilot's Windows and Jettison Mechanism
Cabin Flooring Skid Strips
Cabin Flooring
Cargo Tie Down Fittings (Floor Sockets)
Work Platforms
Heater Ducting and Anemostats
Windshield Wiper
Interior Fixed Lights
Litters—Pole Type (12)
Rescue Hoist and Cable
Seat Cushions—Pilot and Co-Pilot
Back Cushions—Pilot and Co-Pilot
Cargo Sling
Life Rafts—Type C-2A (2)
Shoulder Harnesses—Type D-2 (18)
Shoulder Harnesses—Type G-3 (2)
Auxiliary Fuel Tanks (Fletcher)
Auxiliary Fuel Tanks (Beech)
Carburetor Air Filter
Auxiliary Fuel Tank Shackles—Type S-2A (2)
Auxiliary Fuel Tank Supports
AM-598U Power Amplifier
PRC-8-9 or -10 (Provisions)
AN/ARN-30 Provisions
Auto-Pilot Components
Dorsal Fairing*

*A 10% drag at all speeds will be created with dorsal fairing removed. Refer to the applicable Handbook of Basic Weight Check List and Loading Data for the weight and moment of the removed parts.

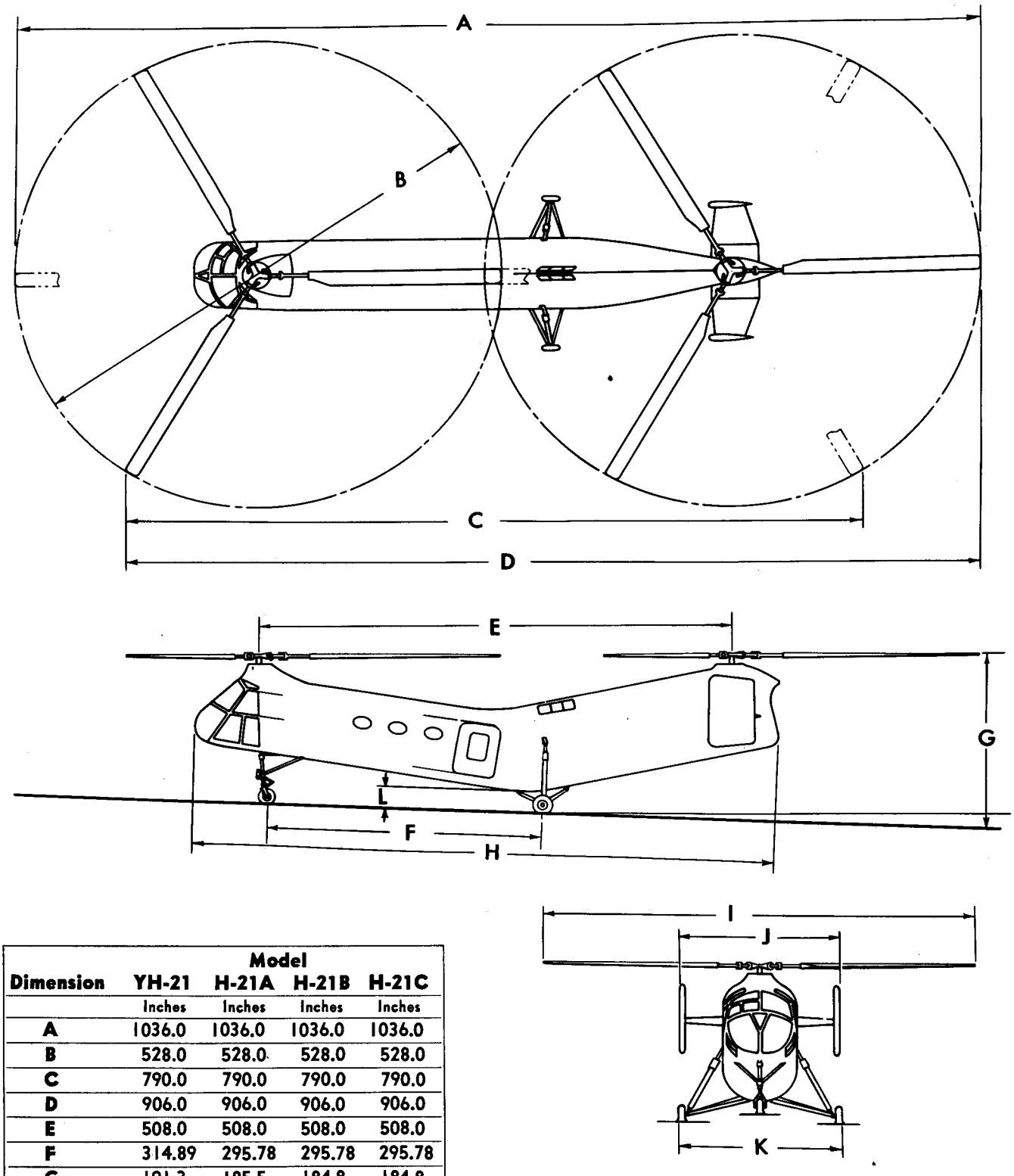

Dimension	Model YH-21	H-21A	H-21B	H-21C
	Inches	Inches	Inches	Inches
A	1036.0	1036.0	1036.0	1036.0
B	528.0	528.0	528.0	528.0
C	790.0	790.0	790.0	790.0
D	906.0	906.0	906.0	906.0
E	508.0	508.0	508.0	508.0
F	314.89	295.78	295.78	295.78
G	191.3	185.5	184.8	184.8
H	630.8	630.8	630.8	630.8
I	469.0	469.0	469.0	469.0
J	156.25	156.25	156.25	156.25
K	176.37	172.25	172.25	172.25
L	23.4	20.7	20.7	20.7

Figure 8. Over-All Dimensions

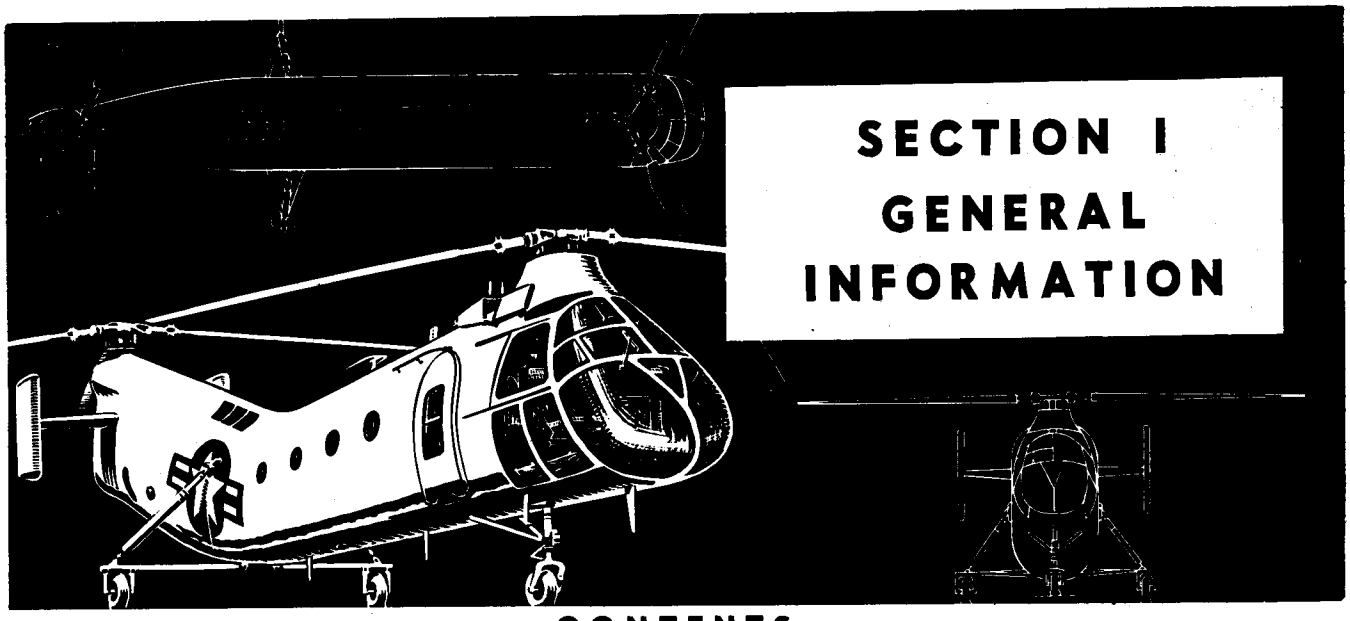

SECTION I
GENERAL INFORMATION

CONTENTS

Par.		Page
1-1.	**Description**	1
1-6.	**Helicopter Dimensions**	2
1-7.	General	2
1-8.	Rotor Blades	2
1-9.	Rotors	2
1-10.	Tail Surfaces	2A
1-11.	Fuselage	2A
1-11A.	Flight Control Movements	2A
1-11B.	Clearance Dimensions and Weights of Component Parts	3
1-12.	**Access and Inspection Provisions**	4
1-30.	**Ground Handling**	4A
1-31.	Hoisting	4A
1-33.	Emergency Hoisting	4A
1-37.	Jacking and Leveling	8
1-40.	Parking and Control Locks	8
1-43.	Mooring and Blade Tie-Down	8A
1-48.	Towing Provisions	10D
1-49A.	**Field Expediency Substitutes for Standard Maintenance Procedures and Techniques**	10E
1-50.	Cold Weather Ground Heating Provisions	10F
1-54.	**Blade Tracking**	12
1-56.	Tracking Pole and Flag	12B
1-62.	**Servicing**	17
1-63.	Fuel System Service	17
1-70.	Engine Oil System Service	18B
1-75.	Transmission and Rotor Hub Service	21
1-80.	Hydraulic Systems Service	22
1-83.	Shock Strut Service	23
1-84B.	Servicing Type AN6287-1 High Pressure Air Valves	24C
1-84D.	Alighting Gear Shock Strut Inflation	24D
1-87.	**Lubrication Requirements**	25
1-88.	Periodic Lubrication	25
1-90.	Climatic Lubrication	25
1-92.	**Special Tools and Equipment**	30B
1-93.	Special Tools List	30B
1-94.	Helicopter Tools	30B
1-95.	Engine Tools	35
1-96.	**Preservation and Packaging**	36A
1-98.	Rotor Blades	36A
1-101.	Transmissions and Clutch	38A
1-107.	Rotor Hub	38P

1-1. DESCRIPTION.

1-2. GENERAL. The H-21 series helicopters are closed, tandem rotor, land type helicopters manufactured by the Vertol Aircraft Corporation. Pilot's and co-pilot's seats are located side by side in the cockpit, the pilot's seat being located on the right. Dual flight controls consisting of collective pitch lever, cyclic stick, and directional control pedals have been provided for the pilot and co-pilot. A cabin for the transportation of passengers, litters, and cargo is located just aft of the cockpit. The alighting gear consists of two main gear assemblies attached to the fuselage just aft of the main cabin entrance and one nose gear assembly located under the fuselage nose section. A static ground wire located on the main alighting gear is provided to discharge any electrostatic currents which accumulate within the structure of the helicopter. A fuselage shipping splice on the H-21B and H-21C helicopters provides a method of separating the fuselage into two sections for air transportability.

1-3. ENGINE AND POWER TRANSMISSION. The engine is housed in an individual compartment aft of the cabin space. Power is transmitted through the engine drive shaft to the central transmission. Rotor transmission drive shafts connect the rotor transmissions to the central transmission. A combination friction and jaw clutch is provided as a part of the central transmission for gradually applying engine power to the transmission drive system and permitting free-wheeling of the rotors for an autorotative landing in event of power failure.

1-4. SEATS AND LITTERS. The YH-21 and H-21A helicopters contain provisions for accommodating up to 14 passengers in various litter and folding seat combinations. The H-21B and H-21C helicopters contain provisions for 20 folding troop seats or 12 litters or combinations of the two as may be required.

1-5. UTILITY. The tactical mission of the YH-21 and H-21A helicopters is to provide air rescue operations and air transport of personnel and cargo, particularly in arctic regions. These helicopters may be equipped with flotation gear for use in over-water operations. The H-21B and H-21C helicopters are designed to provide air support for assault operations and transportation of troops and cargo. These helicopters are equipped with wheel type alighting gear only.

1-6. HELICOPTER DIMENSIONS.

1-7. GENERAL.

Length Over-All
- Rotors Turning ..... 1036.0 in.
- Rotors in Phase and Static ..... 906.0 in.
- Blades Folded ..... 630.8 in.
- Rotors Dephased ..... 790.0 in.

Height Over-All
- Top of Rotor Hub to Ground
  - YH-21 ..... 191.3 in.
  - H-21A ..... 185.5 in.
  - H-21B, H-21C ..... 184.8 in.

Ground Clearance of Blades

YH-21	Static	Forward	140.8 in.
		Aft	164.8 in.
	Idling	Forward	171.9 in.
		Aft	193.8 in.
H-21A	Static	Forward	135.0 in.
		Aft	159.0 in.
	Idling	Forward	163.4 in.
		Aft	187.4 in.
H-21B, H-21C	Static	Forward	129.5 in.
		Aft	160.0 in.
	Idling	Forward	158.5 in.
		Aft	189.1 in.

Width Over-All
- Rotors Turning ..... 528.0 in.
- Blades Folded
  - YH-21 ..... 176.374 in.
  - H-21A, H-21B, H-21C ..... 172.25 in.

Center-to-Center Distance
- Fwd Rotor to Aft Rotor ..... 508.0 in.

Nose Wheel to Main Wheels
- YH-21 ..... 314.89 in.
- H-21A, H-21B, H-21C ..... 295.78 in.

Main Alighting Gear (Over-All Width)
- YH-21 ..... 176.374 in.
- H-21A, H-21B, H-21C ..... 172.25 in.

Normal Gross Weight
- YH-21 ..... 11,022 lb
- H-21A ..... 11,039 lb
- H-21B, H-21C ..... 13,256 lb

Overload Gross Weight
- YH-21, H-21A ..... 13,500 lb
- H-21B, H-21C ..... 13,500 lb

CAUTION

All H-21 model helicopters are restricted to an overload gross weight of 13,500 pounds pending completion of qualification tests.

1-8. ROTOR BLADES.

Blade Chord
- Metal Blade
  - Root ..... 16.5 in.
  - Tip ..... 16.5 in.
- Wood Blade
  - Root ..... 18 in.
  - Tip ..... 18 in.

Blade Taper ..... None

Blade Twist
- Wooden Blade ..... 7°
- Metal Blade ..... 4°37′

Angle of Incidence in Neutral
- Aft Blades ..... 8°16′
- Fwd Blades ..... 8°16′

Blade Pitch Range ..... 16°

Mean Average Incidence Tolerance between Forward and Aft Rotor Blades ..... ±0°30′

Blade Overlap ..... 20 in.

Blade Tip Clearance in Plane of Flapping... 29 in. under a one g droop

Blade Tip Speed..... 594 fps at 258 rpm

Angular Tolerance between Forward and Aft Blades in Phased Position... ±3°

1-9. ROTORS.

Number of Rotors 2

Number of Blades per Rotor 3

Rotor RPM Range
- Take-Off—Normal 250–260
- Take-Off—Emergency 290–310
- Powered Flight 245–260
- Autorotation 260–310

Gear Ratio—Engine to Rotors ... 9.692 to 1

Diameter of Rotors ..... 528 in.

Disc Area per Rotor..... 1520 sq ft

Disc Loading (at Design Gross Weight) .....

YH-21	3.75 psf
H-21A	3.68 psf
H-21B, H-21C	4.36 psf

Blade Area (6 @ 30.3 sq ft) ..... 182 sq ft
Swept Area Solidity Ratio (Blade Area Divided by Disc Area) 0.06

1-10. TAIL SURFACES.

Horizontal Stabilizers
Airfoil Section ..... NACA 0012
Area ..... 45.22 sq ft
Vertical Fins
Airfoil Section ..... NACA 0012
Area ..... 52.40 sq ft

1-11. FUSELAGE.

Width (Without Rotors) ..... 76.0 in.
Height (Without Rotors) ..... 175.2 in.
Length (Without Rotors) ..... 630.8 in.
Height of Cabin Door Above Ground (Static) YH-21 ..... 38.406 in.
H-21A ..... 36.85 in.
H-21B, H-21C .. 37.4 in.
Height of Rescue Door Above Ground (Static) YH-21, H-21A .. 62.4 in.
H-21B, H-21C .. 63.5 in.
Cabin Door Dimensions
YH-21, H-21A ..... 59.6 x 45.22 in.
H-21B, H-21C ..... 59.75 x 45.22 in.
Rescue Door Dimensions
YH-21, H-21A ..... 59.9 x 37.6 in.
H-21B, H-21C ..... 59.45 x 37.75 in.
Stowage Space Available for Baggage and Cargo ..... 610 cu ft

1-11A. FLIGHT CONTROL MOVEMENTS.

Longitudinal Cyclic and Differential Collective Pitch Movements
Cyclic Stick Moves
YH-21, H-21A Forward 7.02 in.
YH-21, H-21A Aft 6.82 in.
H-21B, H-21C Forward 8.90 in.
H-21B, H-21C Aft 8.65 in.
Longitudinal Quadrant (Lower Differential Controls) Rotation from Neutral ..... ±27°
Longitudinal Quadrant (Upper Controls) Rotation from Neutral ..... ±25°46.5′
Swash Plate Tilt from Neutral .. ±4°50′

Rotor Blade Disc Tilt from Neutral . . ±6°
Rotor Blade Differential Collective Pitch Change (on both Forward and Aft Rotors) . . . . . ±3°
Lateral Cyclic Movement
Cyclic Stick Moves
YH-21, H-21A Left 4.88 in.
YH-21, H-21A Right 4.88 in.
H-21B, H-21C Left 6.82 in.
H-21B, H-21C Right 6.82 in.
Lateral Walking Beam (Lower Differential Control) Rotation from Neutral . . . . . ±26°25′
Lateral Quadrants (Upper Controls) Rotation from Neutral . . ±14°19.5′
Swash Plate Tilt from Neutral . . ±4°10′
Rotor Blade Disc Tilt from Neutral ±10°
Directional Control Movement
Directional Pedals Move
Forward 3.25 in.
Aft 3.25 in.
Directional Butterfly Quadrants (Lower Differential Control) Rotation from Neutral . . . ±28°50.4′
Directional Quadrants (Upper Controls) Rotation from Neutral . . . . . ±14°19.5′
Swash Plate Tilt from Neutral . . ±4°10′
Rotor Blade Disc Tilt from Neutral
Forward Rotor 5° below
Forward Rotor 5° above
Aft Rotor 5° below
Aft Rotor 5° above
Collective Pitch and Longitudinal Trim Movement
Collective Pitch Lever Travels from Neutral . . . . . Below 17°29′
Above 11°19′
Walking Beam (Lower Differential Controls) Rotation from Neutral
Aft 27°6′
Forward 19°3′
Upper Control Quadrant Rotation from Neutral . . . . . 28°21′
Rotor Blade Pitch Changes from Neutral . . . . . Below 9°30′
Above 6°30′
Total Blade Pitch Travel . . . . . 16°
Trim Wheel Full Nose Down
Blade Trim—Forward Blades . . . . . 1°6′ below
Blade Trim—Aft Blades 1°6′ above
Trim Wheel Full Nose Up
Blade Trim—Forward Blades . . . . . 1°6′ above
Blade Trim—Aft Blades 1°6′ below

1-11B. CLEARANCE DIMENSIONS AND WEIGHTS OF COMPONENT PARTS.

1-11C. The following information is presented in order to aid maintenance activities in providing working facilities for removing and handling component parts of the helicopter.

1-11D. CLEARANCE DIMENSIONS. Ground clearance dimensions measured from the lifting eye have one foot added to adequately clear surrounding parts. Two feet have been added to the length and width to provide a clearance of one foot on either side or end.

a. Parking space required:
with blades spread . . . . . 46 ft x 88 ft, 4 in.
with blades folded . . . . . 16 ft, 6 in. x 54 ft, 6 in.
with blades in line over fuselage centerline . . . . . 39 ft, 1 in. x 78 ft, 8 in.

b. Blade folding space required . . . . . 46 ft x 88 ft, 4 in.

c. Width required for towing:
with blades spread . . . . . 46 ft
with blades folded . . . . . 16 ft, 6 in.
with blades in line over fuselage centerline . . . . . 41 ft

d. Clearance required each side for blade removal . . . . . 23 ft

e. Height required for rotor hub to clear transmission shaft . . . . 17 ft, 7 in.

f. Height required to lift rotor transmission clear of fuselage . . . . 21 ft.

g. Height required to lift rotor hub, rotor transmission and upper controls assembly clear of fuselage . . . . . 21 ft, 6 in.

h. Height required for helicopter hoisting sling to hoist helicopter until wheels are free of the ground . . . . . 18 ft

1-11E. WEIGHTS OF COMPONENT PARTS. To facilitate handling during removal or replacement, approximate weights are given for the following primary components:

a. Metal rotor blade (each) . . . . . 113 lb
Wooden rotor blade (each) . . . . . 105 lb

b. Rotor hub and pitch bearing case . . . . . 320 lb

c. Transmission:
forward . . . . . 382 lb
central . . . . . 210 lb
aft . . . . . 361 lb

d. Drive shafting:
engine . . . . . 15.56 lb
transmission . . . . . 176.44 lb

e. Upper flight controls	40 lb
f. Alighting gear:	
main	366 lb
nose	168 lb
g. Rotor transmission, rotor hub and upper flight controls (assembled for installation):	
forward	829 lb
aft	786 lb
h. Engine fan and fan hub adapter	53.51 lb
i. Engine package	1800 lb

1-12. ACCESS AND INSPECTION PROVISIONS.

1-13. CABIN. (See figure 1-1.) Access to the cabin is provided by the sliding door (35) located in the center of the left side of the fuselage. A sliding door (4), used during rescue operations, is located on the right side of the fuselage just aft of the cockpit. Both doors have latches which hold them in the open or closed position and can be operated from inside or outside the helicopter. A jettison arrangement is provided for each door which releases the tracks and allows the door to fall free for emergency escape.

1-14. CABIN FLOOR. (See figure 2-35.) The cabin floor is made up of sections and secured to the structure by Dzus fasteners and screws. To gain access to the flight control and power plant control cables located under the cabin floor, lift floor sections.

1-15. PILOTS' ESCAPE HATCHES. (See figure 1-1.) There are two cockpit emergency exit windows (1 and 43), one on the left for the co-pilot and one on the right for the pilot. The transparent plastic panels may be pushed out by hand should the windows fail to open.

1-16. CABIN EMERGENCY EXITS. (See figure 1-1.) Two emergency escape panels (9) are located in the cabin ceiling. The panels may be pushed out for escape if the cabin main or rescue doors are blocked.

1-17. LOWER CONTROLS. (See figure 1-1.) Three removable panels (44), located on the underside of the fuselage beneath the cockpit, provide access to the lower flight controls. All three panels are secured by quick locking fasteners.

1-18. HYDRAULIC TEST OUTLETS. (See figure 1-1.) Hydraulic test outlet connections are located just aft of the cockpit on the lower left side of the fuselage and are covered by a removable panel (42) secured with quick locking fasteners. For more details see Section III, Hydraulic Systems.

1-19. HYDRAULIC RESERVOIR. (See figure 1-1.) A hinged door (11) is provided in the forward transmission cowling for checking and filling the reservoir for the hydraulic flight control and hoist systems.

1-20. FORWARD ROTOR AND TRANSMISSION. (See figure 1-1.) Three steps (40) and two hand grips (8) can be used to climb to the forward rotor. A transmission oil filler and dipstick access door (6) is provided in the cowling which surrounds the forward transmission. This cowling (5 and 10) is secured by quick locking fasteners and can be removed for inspection and access to the transmission. Two work platforms (3 and 7) are provided on each side of the forward transmission. These platforms fold flat against the fuselage when not in use.

1-21. CENTRAL TRANSMISSION AND CLUTCH. (See figure 1-1.) The central transmission assembly is readily accessible from the aft end of the cabin. The oil filler neck is located on the right side of the case. The filler neck cap has an oil level dipstick attached. A removable panel (13) for central transmission hoisting cables is provided in the fuselage over the transmission to aid in removal and installation.

1-22. AFT ROTOR AND TRANSMISSION. (See figure 1-1.) The aft rotor and transmission are reached by using the four steps provided to climb to the horizontal stabilizer. Access to the transmission is gained by removing the two pylon cowling sections (20 and 21). Four inspection openings (25) are also provided in the side of the fuselage above the stabilizer. An oil filler cap and dipstick are located on the upper case at the aft end of the transmission.

CAUTION

The maximum number of men allowed on each horizontal stabilizer is two.

1-23. DRIVE SHAFTS AND BEARINGS. (See figure 1-1.) Small access doors (15 and 16) are provided in the dorsal cowling for access to the aft drive shafts, shaft couplings, and bearings. Access to the forward transmission drive shaft couplings and bearings may be gained after lowering the center section and then the forward and aft sections of heater ducting. All three duct sections are hinged on both sides, so that access to the drive shafts and bearings may be gained from either side by pulling the hinge pin and allowing the duct sections to swing down.

Note

The center section of heater ducting overlaps the two end sections and therefore must be released before the other sections can be dropped.

1-24. ENGINE COMPARTMENT. (See figure 1-1.) Access to the engine compartment is gained by removing the two engine hatch doors (30). The engine accessory section and units aft of the engine may be reached through the air exit openings located on the lower side of the fuselage. The engine air inlet cowling (14) may be removed to gain access to the upper engine compartment.

CAUTION

Do not start the engine or engage the clutch while the engine hatch doors and/or keel section are removed. The engine hatch doors and keel section are structural members and must be in place when the engine is started or the clutch engaged to prevent stress concentration buildups which might damage the helicopter.

1-25. FUEL CELL. (See figure 1-1.) Access to the fuel cell is through a removable panel located in the compartment top inside the cabin. Two removable panels (34 and 35) are provided in the bottom of the fuselage for access to the auxiliary fuel pump, fuel shut-off valve, and strainer. The fuel cell is filled through a tube connected to a cap (12) on the right side of the fuselage, forward of the main alighting gear.

1-26. AUXILIARY FUEL TANKS. On the H-21B and H-21C helicopters, provisions for two 165 gallon external, droppable fuel tanks have been incorporated. The auxiliary fuel system air pressure pump, selector valve, pressure relief valve and tubing may be reached by removing both the cabin floor and an access door (47) on the bottom of the fuselage. Both tanks, when installed, are accessible from outside the helicopter. When fuel and air lines are removed, cover plates are installed to prevent foreign matter from entering the openings.

1-27. OIL TANK. (See figure 1-1.) Access to the engine oil tank is gained through the engine air exit openings. The oil system can be drained through these openings. The oil tank filler neck and dipstick are located on the right side of the fuselage aft of the engine.

1-28. EXTERNAL POWER RECEPTACLE. (See figure 1-1.) A small hinged door on the left side of the fuselage just aft of the cabin door gives access to the external power receptacle.

1-29. FIRE EXTINGUISHER DOORS. (See figure 1-1.) Spring-loaded doors (32) are provided on each side of the engine hatch doors for insertion of fire extinguisher nozzles in the event of a fire in the engine compartment.

1-30. GROUND HANDLING.

1-31. HOISTING.

1-32. GENERAL. (See figure 1-2.) Four lugs are provided for hoisting the helicopter. Two are attached to the upper longerons just aft of the cockpit and two are located on the main alighting gear shock strut fittings. Attach the hoisting sling to the front lugs with AN10-25A bolts and to the rear lugs with AN16-23A bolts.

Note

Care must be used when attaching the sling to the helicopter. Be sure to attach the longer sling cables to the front lugs. This will assure hoisting the helicopter over its center of gravity.

1-33. EMERGENCY HOISTING.

1-34. In the event of extensive damage to the helicopter, care should be taken during salvage operations to prevent needless additional damage. Before attempting to hoist or move the helicopter, remove all equipment, cargo, and loose articles from inside the cabin.

1 Pilot's Sliding Window
2 Rescue Door Escape Panel
3 Work Platform, right side
4 Rescue Door
5 Forward Pylon Cowling
6 Access Panel for Rotor Transmission Servicing
7 Work Platform, left side
8 Hand Holds
9 Overhead Escape Panel
10 Forward Pylon Cowling
11 Hydraulic Reservoir
12 Fuel Scupper
13 Access Panel for Central Transmission Hoisting Cables
14 Dorsal Cowling Air Intake Section
15 Aft Drive Shaft Bearings Access Panels
16 Aft Flexible Couplings Access Panels
17 Dorsal Cowling
18 Dorsal Cowling
19 Aft Rotor Transmission Access
20 Dorsal Cowling
21 Aft Pylon Cowling, right side
22 Aft Pylon Cowling, left side
23 Tail Cone
24 Compass Transmitter Access Panel

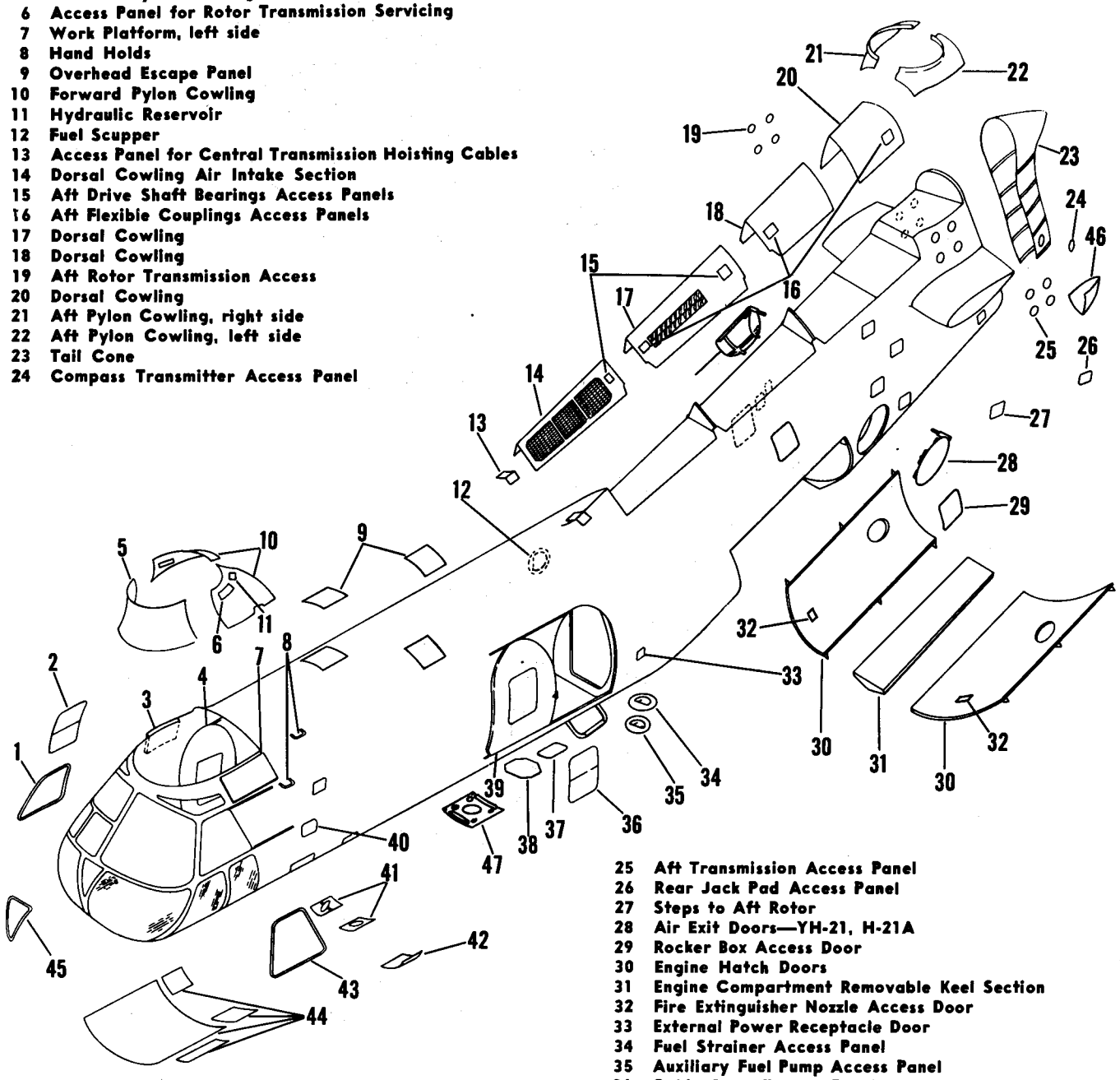

25 Aft Transmission Access Panel
26 Rear Jack Pad Access Panel
27 Steps to Aft Rotor
28 Air Exit Doors—YH-21, H-21A
29 Rocker Box Access Door
30 Engine Hatch Doors
31 Engine Compartment Removable Keel Section
32 Fire Extinguisher Nozzle Access Door
33 External Power Receptacle Door
34 Fuel Strainer Access Panel
35 Auxiliary Fuel Pump Access Panel
36 Cabin Door Escape Panel
37 External Cargo Release Cable Panels—YH-21, H-21A
38 Cargo Hook Stowage Panel—YH-21, H-21A
39 Cabin Door
40 Steps to Forward Rotor
41 Nose Alighting Gear Access Panels
42 Hydraulic Test Outlets Access Panel
43 Co-pilot's Sliding Window
44 Lower Controls Access Panels
45 Instrument Console Access Panel
46 Lower Tail Fairing
47 Ferry Fuel System Access—H-21B, H-21C

Figure 1-1. Access Doors and Panels

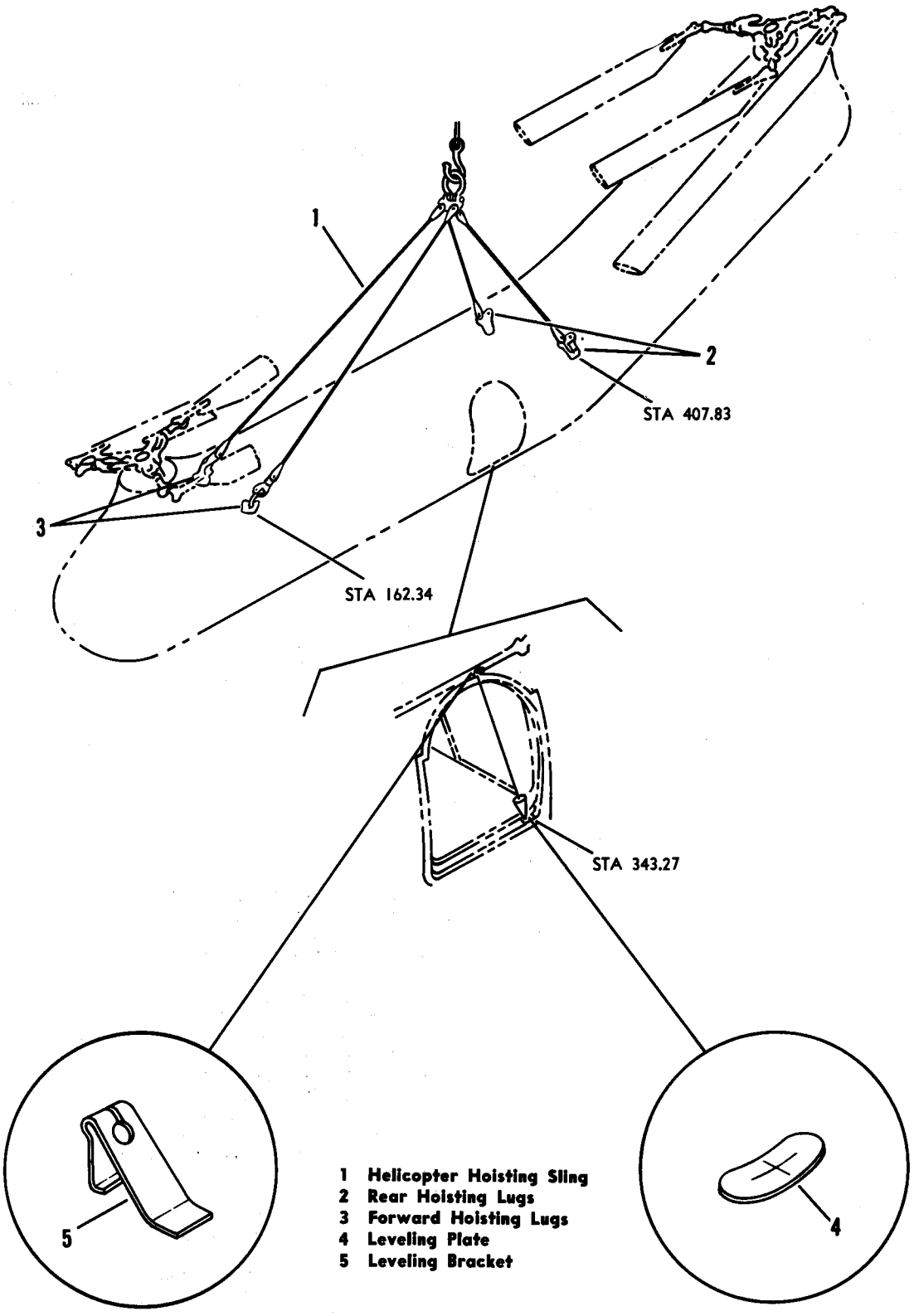

Figure 1-2. Hoisting and Leveling

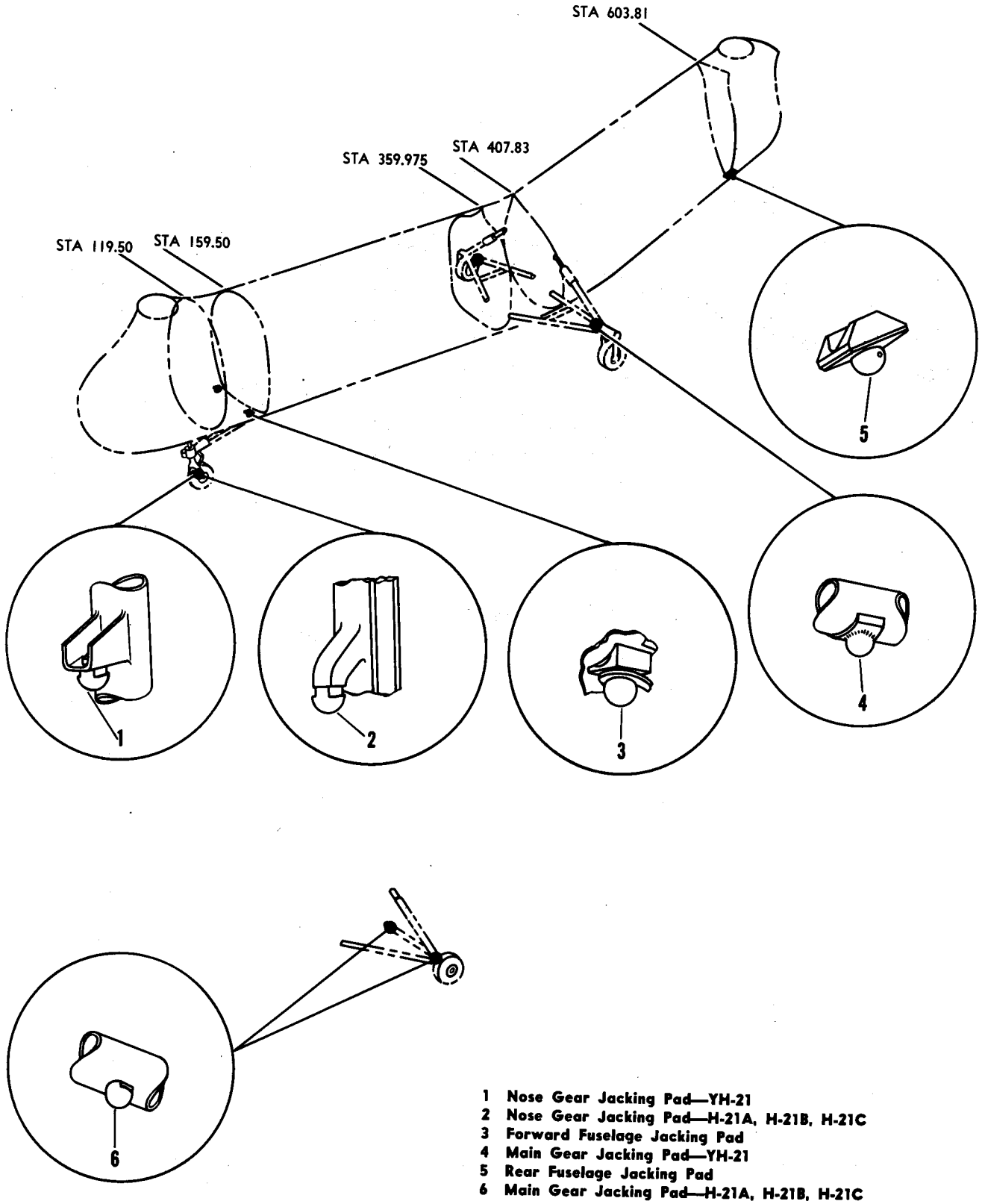

1 Nose Gear Jacking Pad—YH-21
2 Nose Gear Jacking Pad—H-21A, H-21B, H-21C
3 Forward Fuselage Jacking Pad
4 Main Gear Jacking Pad—YH-21
5 Rear Fuselage Jacking Pad
6 Main Gear Jacking Pad—H-21A, H-21B, H-21C

Figure 1-2A. Jacking

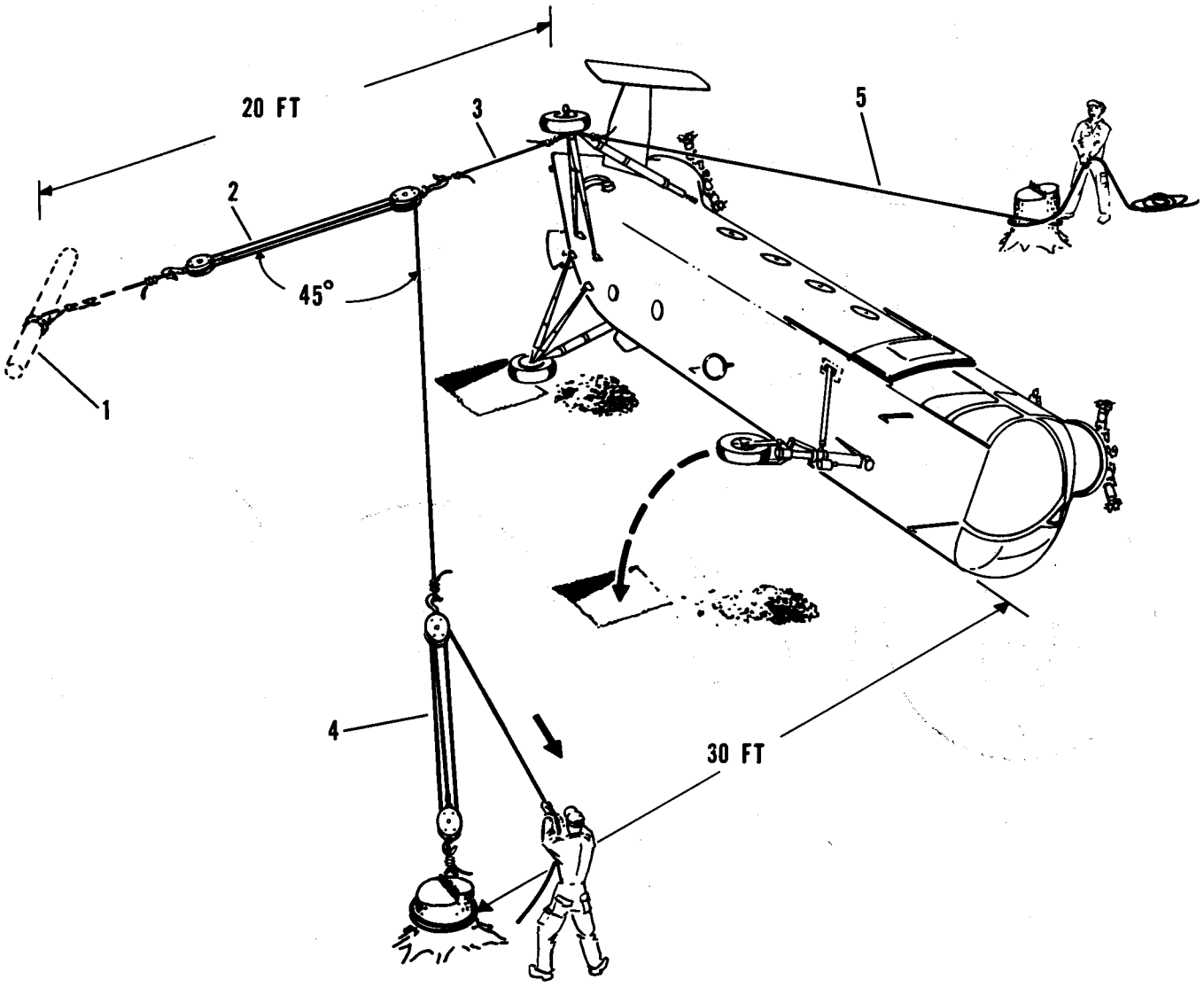

1 Dead Man
2 1/2-Ton Block and Tackle
3 Cable
4 1/2-Ton Block and Tackle
5 Restraining Rope

Figure 1-3. Uprighting An Overturned Helicopter

CAUTION

Never attempt to lift the helicopter with a sling attached to the rotor transmissions or with a cable sling around the fuselage.

1-35. UPRIGHTING AN OVERTURNED HELICOPTER. (See figure 1-3.) There are many procedures that may be utilized in uprighting a helicopter and the following procedure will apply only to a helicopter overturned in a remote area where standard hoisting equipment is not available:

a. Remove all equipment and components that may interfere with the operation or cause damage to the helicopter during the uprighting operation.

b. Prepare a "dead man" (1), if no trees, stumps, or rocks are available, about 20 feet away and perpendicular to the centerline of the fuselage just aft of the main alighting gear. A log, rotor blade spar, or a piece of 3- by 10-inch lumber, approximately seven feet in length may be utilized as a "dead man." Fasten a 1/2-ton rope block and tackle (2) to the tree, stump, rock, or "dead man." If a "dead man" is used, bury it parallel to the fuselage.

c. Attach the other end of the block and tackle to a cable (3) looped around the uppermost main gear at the wheel.

d. Fasten the loose rope end of the block and tackle to another 1/2-ton block and tackle (4) anchored approximately 30 feet from the fuselage and about 45 degrees from the first block and tackle (2).

e. Fasten a restraining rope (5) to the uppermost main gear.

f. Scoop a shallow hole under the main and nose gear wheels so the fuselage will not slide while it is being uprighted.

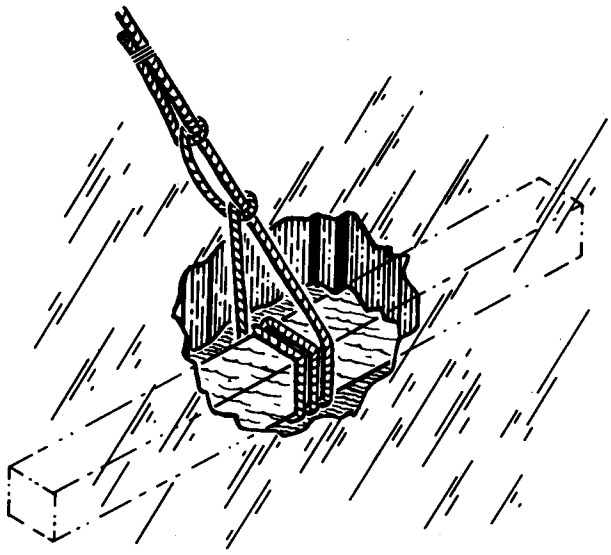

Figure 1-3A. Typical Ice Anchor

g. As the fuselage rises, the lower side must be braced at all times in the event the block and tackle arrangement should fail.

h. The restraining rope must be carefully controlled when the fuselage starts to roll over under its own weight.

i. There are many anchoring installations for the block and tackle equipment that may be utilized in cold climates or where there are no trees, stumps, and large rocks. Some of these anchors made of logs, lumber, or broken rotor blade spars are devised as follows:

1. On frozen lakes, cut a hole in the ice and insert the anchor as shown in figure 1-3A.
2. In deep snow areas, bury the anchor and allow it to freeze into place.
3. On frozen or rocky surfaces, drive steel stakes into the surface.

1-36. SUBMERGED IN WATER. If the helicopter is completely submerged in water and resting on its side, attach one aft and one forward cable of the helicopter hoisting sling to the top side of the fuselage and pull the helicopter back onto its alighting gear. Attach the other sling cables and hoist the helicopter at about one foot per minute until its breaks the surface of the water. Open all doors while the helicopter is still under water to allow drainage. A hoisting rate of one inch per minute should be used after the helicopter breaks the surface of the water.

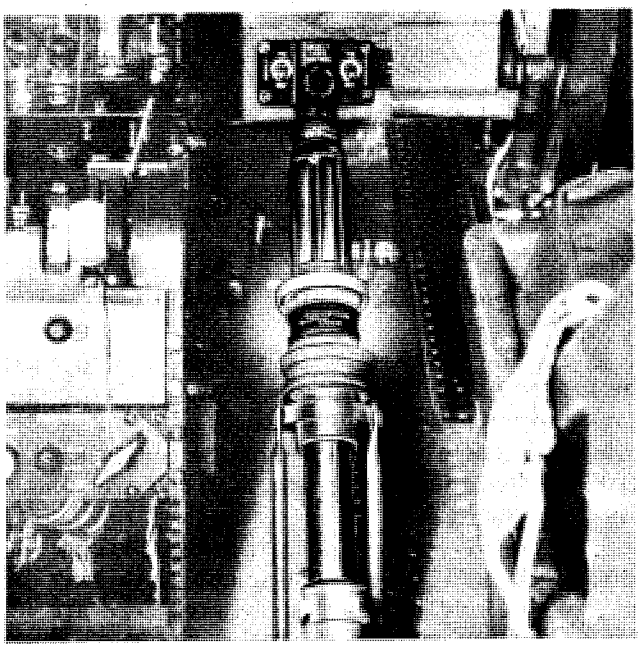

Figure 1-4. Collective Pitch Down Lock

1-37. JACKING AND LEVELING.

1-38. JACKING. (See figure 1-2A.) Three jacking points are provided on the fuselage. The aft jacking pad is located on the fuselage keel directly below the tail. The forward jacking pads are located on the lower side of the fuselage at the first bulkhead aft of the rescue door. Jacking points are also provided on the nose gear fork and on the main gear V-strut. On H-21A, H-21B and H-21C helicopters, an additional jacking pad is provided at the inboard end of the rear leg of the V-strut.

CAUTION

Jacking of the helicopter must not be attempted with the engine hatch keel removed. A jack is used to support the aft end in order to relieve imposed loads on the fuselage structure which will develop when the keel is removed.

The aft jacking point is approximately 75 inches from the ground on the YH-21 and approximately 70 inches on the H-21A, H-21B, and H-21C.

1-39. LEVELING. (See figure 1-2.) Provisions for leveling the helicopter are installed in the aft end of the cabin compartment. A small bracket for installation of a plumb bob line is located on the upper left longeron over the cabin main door inside the fuselage. A small plate with a scribed cross on its surface is riveted to the lower left longeron at the door jamb. To level the helicopter, suspend a plumb bob line from the upper bracket and center the plumb bob on the cross. This will level the helicopter laterally and longitudinally. The helicopter is considered level when the planetary gears of the rotor transmissions are level, *not* when the fuselage waterlines are level.

1-40. PARKING AND CONTROL LOCKS.

1-41. PARKING. Park the helicopter as follows:

a. Head the helicopter into the wind.

b. Set and lock the wheel brakes by depressing the pilot's toe brakes and pulling up on the parking brake locking lever.

c. Engage the nose wheel swivel lock.

d. Engage the friction clutch to lock the rotors.

CAUTION

To prevent inadvertent disengagement of the friction clutch, and to insure that the rotors remain locked, disconnect the power supply.

1-42. CONTROL LOCKS. (See figure 1-4.) A collective pitch down lock is located on the pilot's collective pitch lever below the throttle grip. It is operated by pushing the collective pitch lever to the full down position, pulling the knurled ring back, and twisting it to the locked position. The lock is spring-loaded and will function only if the lever is full down and the ring is pulled back.

1-42A. COLLECTIVE PITCH FRICTION LOCK. A knurled collar located just below the down lock on the collective pitch lever provides the pilot with a means of increasing the friction on the collective pitch lever. Turning the collar to the left tightens the collar and increases the friction, turning it to the right loosens the collar and decreases friction.

Note

Check the collective pitch friction lock for proper operation by tightening the collar then pulling up on the collective pitch lever. A definite drag should be

felt and the lever should remain in position when released if the friction lock is functioning properly.

1-43. MOORING AND BLADE TIE-DOWN.

1-44. ROTOR BLADE FOLDING. (See figure 1-5.) When placing the helicopter in storage or when preparing to move the helicopter into a confined area, the rotor blades should be removed. However, if blade removal is not desired, the blades may be folded as directed in the following paragraphs. Six blade racks marked 1R, 2R, 3R, 1L, 2L, and 3L are provided to fold and rack the rotor blades. Numbers corresponding to the blade rack number are stenciled on the fuselage sides at the rack attaching fittings. The rotor blades are folded without dephasing. Fold and rack the blades as follows:

a. Disengage the friction clutch. Slide blade rack 2R on the blade nearest the right side of the fuselage and rotate the blades until the folding mark on the rainshield is in line with the FOLD line on the forward cowling.

b. Engage the friction clutch to prevent the rotor head from turning.

CAUTION

Disconnect the power source to prevent inadvertent starting of the engine when the blades are folded. Extensive damage to the rotor system will result if the engine is started with the friction clutch engaged.

c. Compress the blade lag damper and attach blade rack 2R to the fuselage fitting.

d. Engage the pitch locks on the remaining five blades. On many hub assemblies the pitch bearing housings have been modified by removal of the pitch locks. To lock the housings on these hubs, install the pitch lock pins (11, figure 1-5).

e. Push each blade toward the folded position until the blade lag damper is against its stop. This will give added clearance between blades when folded, and will prevent damage due to blades hitting the hub.

f. Fold and rack the blades by removing one of the two taper pins from the blade root socket and loosening the other pin to serve as a hinge. The pin used as a hinge must be loosened by backing off the retaining nut approximately five turns and breaking the pin loose with a taper pin puller (22E5867, figure 2-2) or pin remover (22E5972, figure 1-27), prior to removing the other pin.

CAUTION

Failure to follow the procedure in step f. will result in scoring of the taper pins and attaching lugs.

g. Using the loosened pin as a hinge, fold the blade toward the fuselage and attach the rack to the fuselage fittings.

Note

It is recommended that, if time permits, the taper pin being used as a hinge be taken out, liberally coated with anti-seize compound, Spec JAN-A-669, and replaced prior to removing the other pin.

h. In extremely cold weather, it may be more advantageous to remove the blades rather than fold them, since the time required to remove the blades at −54°C (−65°F) is approximately the same as that required for folding the blades at normal temperatures. For blade removal instructions, see Section II.

i. When unfolding the blades, make sure that the mating surfaces between the blade root sockets and pitch bearing housings are free of foreign matter.

Note

Foreign matter on the mating surfaces can act as an abrasive which may cause scoring. Any scratches on the mating surfaces which are deeper than 0.005 inch must be blended out to a depth *no greater* than 0.015 inch.

1-45. BLADE TIE-DOWN. (See figure 1-6.) If the helicopter rotor blades are to be tied down, proceed as outlined in paragraphs 1-46F and 1-46G.

1-46. MOORING. (See figure 1-6.) Three mooring points are provided on the fuselage. Two are located on the main alighting gear at the upper shock strut attachment fittings. The other is located on the nose gear oleo strut. Moor the helicopter as shown in figure 1-6.

1-46A. GROUND HANDLING AND MOORING PROCEDURES FOR EXTREME WEATHER CONDITIONS.

1-46B. PARKING.

a. Parking is defined as the condition under which the helicopter will be secured on the ground, based on gross weight and corresponding wind velocity anticipated. (See table 1-1.)

TABLE 1-1
TIE-DOWN CONDITIONS

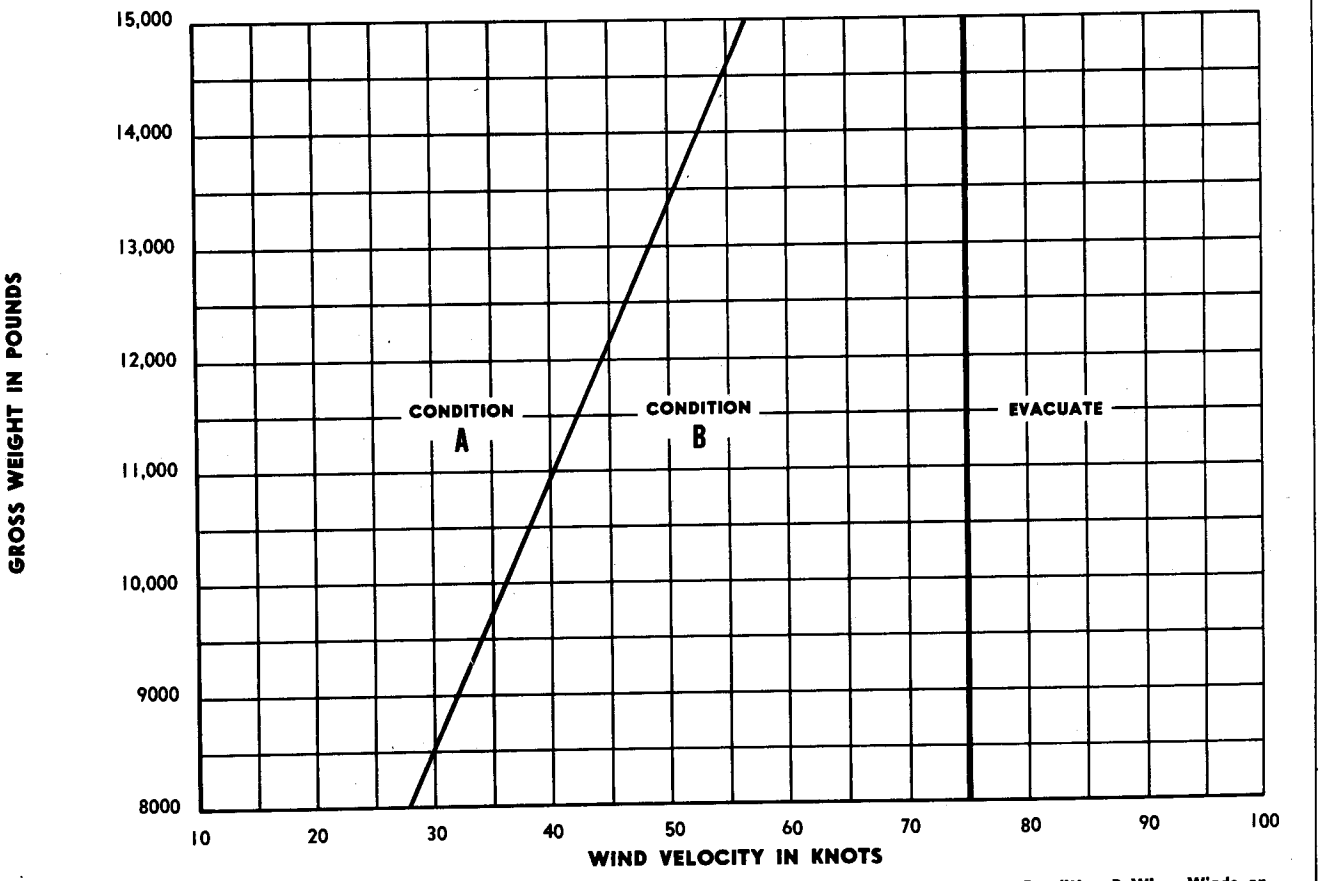

b. When prevailing or forecast velocities of surface winds do not exceed values listed in table 1-1 and the corresponding gross weight of the helicopter is equal to or greater than shown therein, the procedures prescribed under Condition "A" will apply.

c. When velocities of surface winds or gusts are forecast or prevail which exceed the values listed in table 1-1, and the corresponding gross weight of the helicopter is less than shown therein, the procedures prescribed under Condition "B" will apply.

d. When helicopters are not in extended parking status (storage) and facilities or personnel are inadequate to moor the helicopter in accordance with Condition "B," the helicopter should be evacuated to a safe weather area.

1-46C. PARKING AND MOORING PROCEDURES (CONDITION "A").

1-46D. When parking, position the helicopter to provide adequate clearance for maintenance, servicing, and fire lanes. Whenever possible, head the helicopter into the prevailing wind; park it at least 750 feet from the centerline of landing strips and beyond areas in line with or extending from the ends of landing strips within the flying field boundaries, and at least 250 feet from the farthest edge of connecting taxi strips. Position the helicopter slightly more than rotor span distance from other helicopters.

1-46E. After the helicopter has been properly positioned, place the nose wheel in the fore and aft position. Place chocks fore and aft of each main alighting gear wheel, with each pair of chocks tied together by rope, wood cleats, or any other method to prevent the chocks slipping away from the tire. Sandbags may be used in lieu of chocks when the helicopter is moored on steel mats.

a. Set and lock the wheel brakes by depressing the pilot's toe brakes and pulling upon the parking brake locking lever.

b. Engage the nose wheel swivel lock.

1-46F. BLADE TIE-DOWN. (See figure 1-6.) If the rotor blades are to be tied down while the helicopter is parked on firm ground, slip the blade tip covers, shown in figure 1-7, over the blade tips,

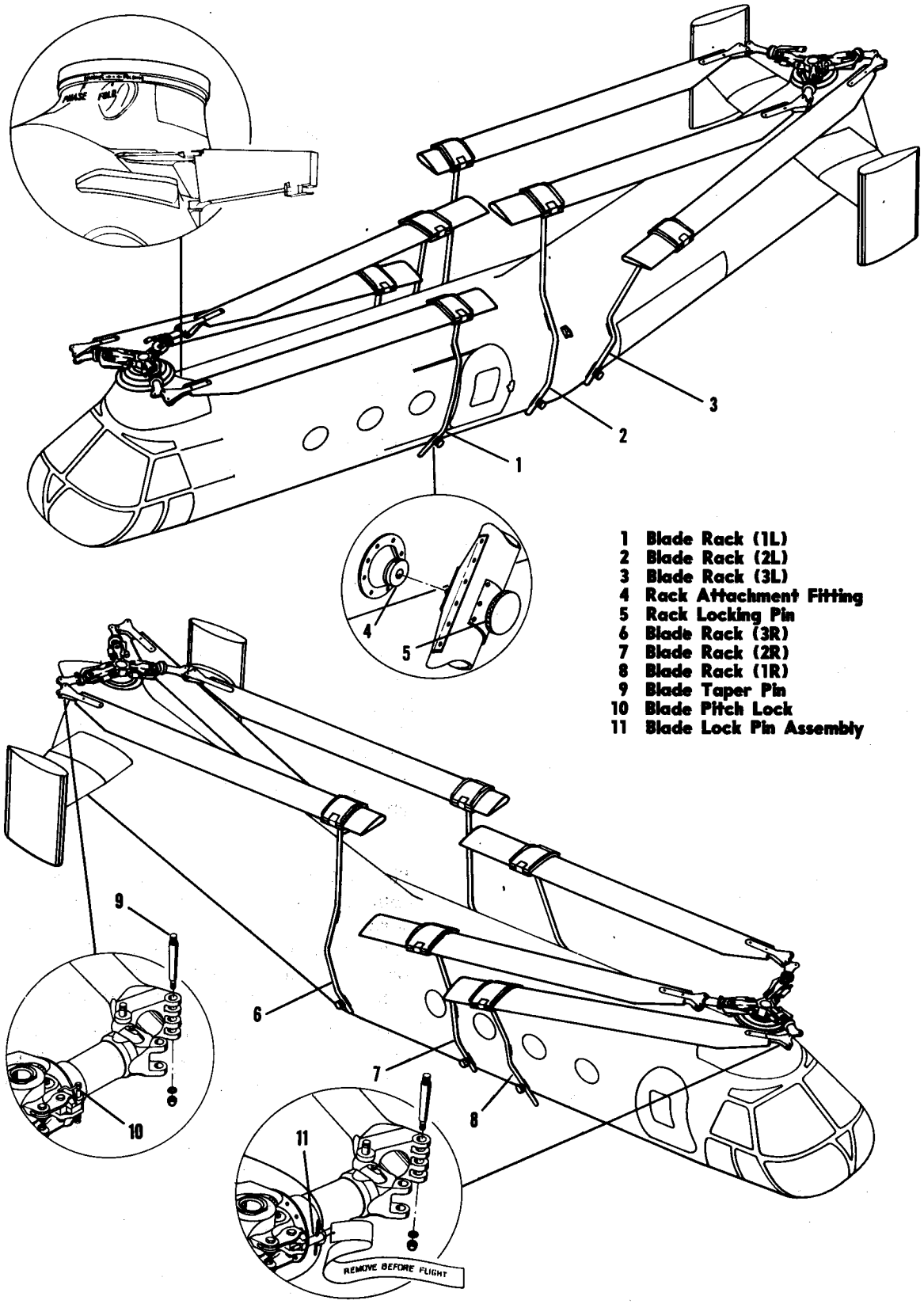

Figure 1-5. Blade Folding

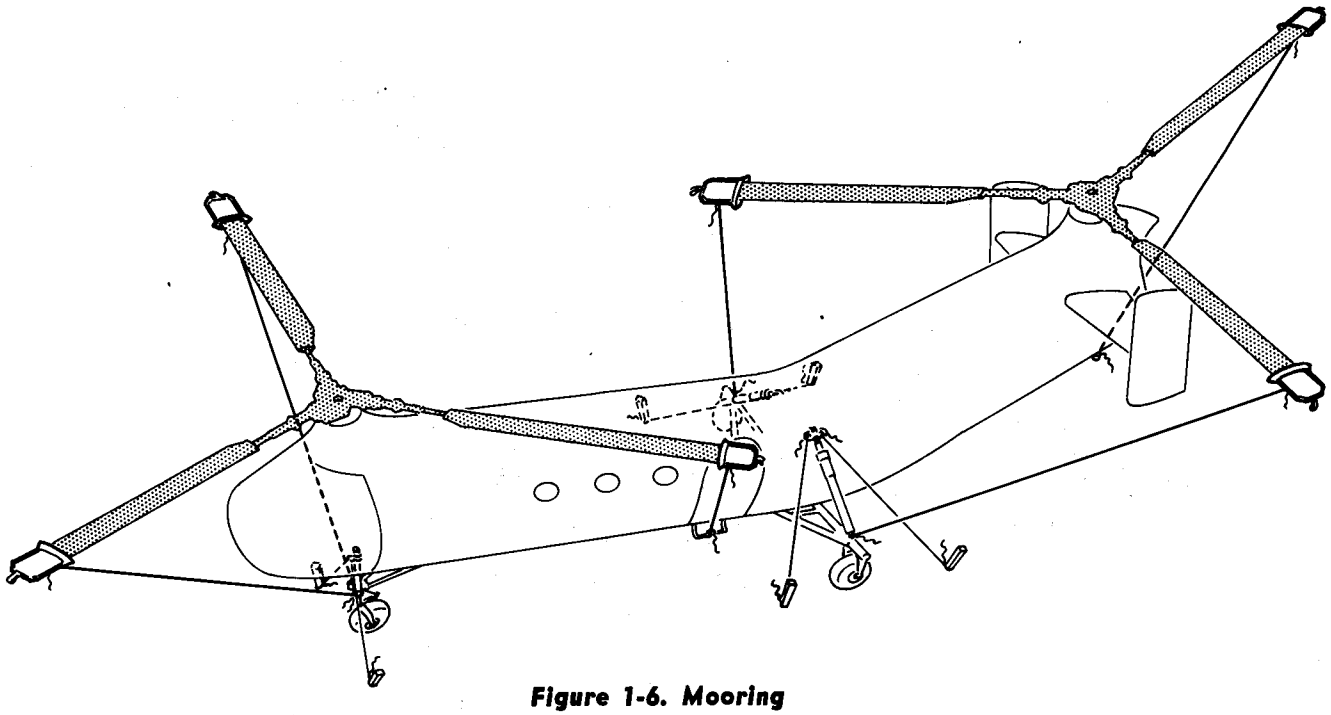

Figure 1-6. Mooring

and secure the tip covers to stakes or other suitable mooring points with ropes.

Note

Rotor blades should be moored whenever the helicopter is parked, due to possible turbulence set up from propeller blasts of other aircraft.

1-46G. If the helicopter is parked on soft ground where stakes may easily pull out, proceed as follows:

a. Uncouple the rotor system from the engine by disengaging the central transmission clutch.

b. Rotate the rotor blades until one of the forward blades extends out perpendicular to the right side of the fuselage. This will place the blades in the best position for securing tie-down ropes to the fuselage.

Note

The blades may be turned by placing a tip cover on a blade tip and walking the blade around with the blade tie-down pole. (See figure 1-27.)

c. When blades are in position, engage the friction clutch to lock the rotors. Lock the collective pitch as directed in paragraph 1-42.

d. Tie the two most forward blades of the forward rotor to the nose alighting gear. (See figure 1-6.)

e. Tie the remaining blade of the forward rotor to the step located under the main cabin door.

f. Tie the two most forward blades of the aft rotor to the main alighting gear.

g. Tie the remaining blade of the aft rotor to the rear jacking point.

CAUTION

Be sure that the tie-down ropes do not bear on any part of the airframe and are not too tight.

1-46H. PARKING AND MOORING PROCEDURES (CONDITION "B").

Note

The following mooring procedures are applicable when the helicopter is being parked for an extended period of time, and/or when the conditions of table 1-1 are exceeded. All procedures of Condition "A" also apply to Condition "B."

1-46I. Use of the proper size wheel chocks is of the utmost importance in mooring the helicopter for high velocity winds. Therefore, use wheel chocks manufactured to the dimensions given in AF Drawing No. 42D6594-2. For ice or snow, use metal collapsible ice grip chocks, Stock No. 8200-159006, AF Drawing No. 50D6602. Another important factor is the weight of the helicopter. Table 1-1 gives weights and relative wind velocities that make tie-down ncessary. To make use of these figures, it is advisable to know the approximate gross weight of the helicopter. During emergencies, knowledge of this information is especially useful for selecting the helicopters that need to be tied down first.

CAUTION

Structural damage can occur from high velocity surface winds. Therefore, the helicopter should be evacuated to a safe weather area if a tornado, hurricane, or wind above 75 knots is expected.

1-46J. Helicopters parked on hard surface areas should be tied to as many of the available ground mooring points as possible. In the event tie-down rings are not available on hard surfaced areas, move the helicopter to an area where anchor kits can be applied. The tie-downs should approximate an angle of 45 degrees to the ground. Sufficient slack should be provided in the lines between the mooring anchors and the helicopter fittings to prevent them from causing undue strain on the aircraft structure due to tightening caused by moisture absorption or by tire or strut deflation. Slip knots must not be used in tying mooring ropes. Anti-slip knots, such as square or bowline knots, may be used. (See figure 1-6A.) Park the helicopter on level ground whenever possible so the load on each alighting gear will be properly distributed.

1-46K. If high winds are expected to come from one direction without shifting, moor the helicopter as follows:

a. Head the helicopter in the direction from which the highest wind or gusts will come.

b. Position it slightly more than rotor span distance from other helicopters with the nose mooring point approximately five feet downwind from the ground mooring anchor.

c. Deflate struts.

d. Fill all fuel tanks to capacity, including auxiliary tanks, if time permits.

e. Place wheel chocks fore and aft of main and nose gear wheels, and secure them by nailing

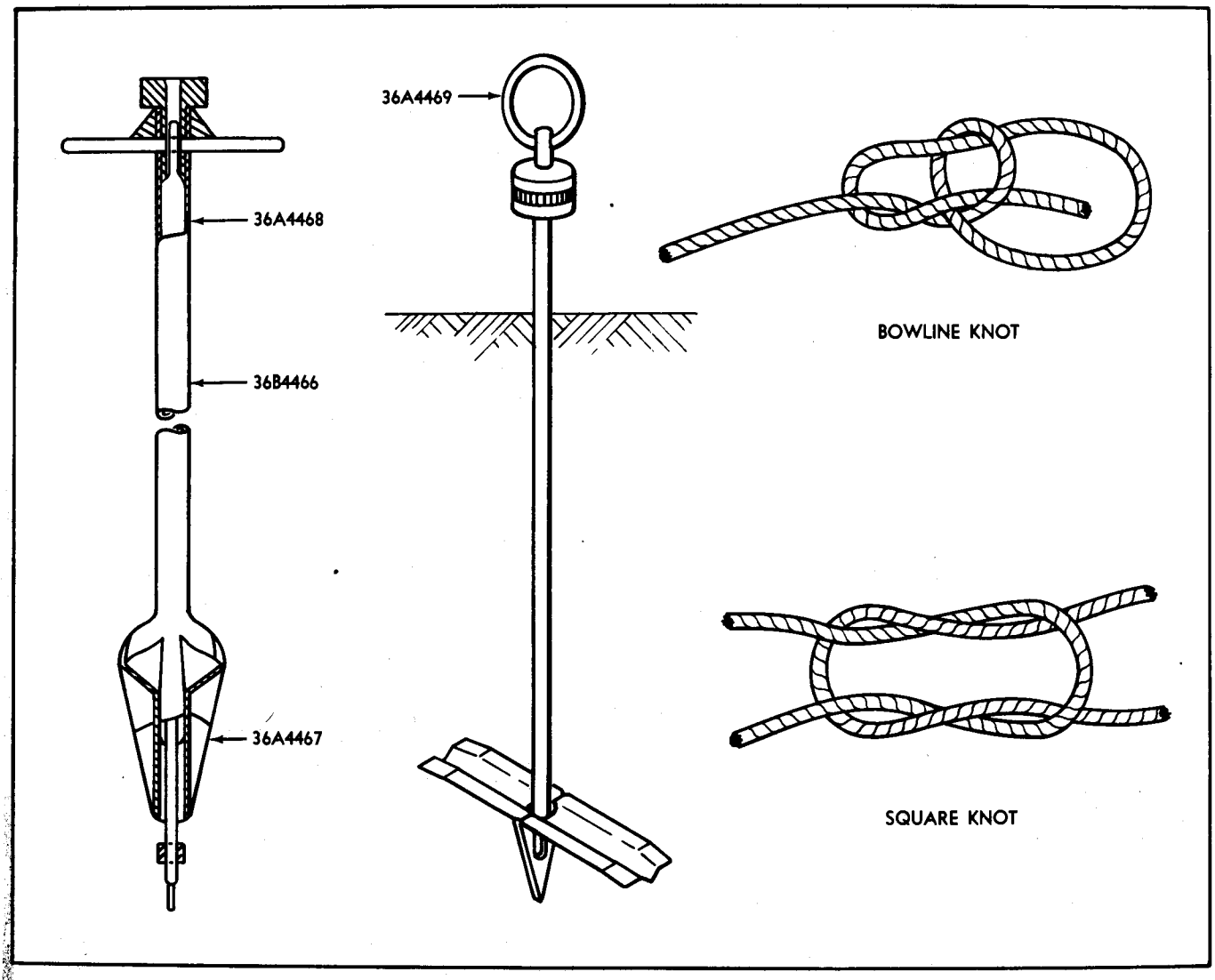

Figure 1-6A. Mooring Anchors

wood cleats from chock to chock. Use ropes to secure chocks if wood cleats are not available or when using ice grip chocks.

f. Fasten two 1/4-inch aircraft cables and wire rope clips, Stock No. 6700-195150, on each side of the fuselage at the mooring points on the upper shock strut attachment fittings of the main alighting gear. Extend the cables outward, in a slightly fore and aft position, and stake them down on each side of the helicopter to a ground mooring anchor. Use 3000-pound pull ropes or chains, if the cables are not available. (See figure 1-6.)

g. Fasten two 1/4-inch aircraft cables and wire rope clips, Stock No. 6700-195150, one on each side, to the mooring point on the nose gear oleo strut. Extend the cables outward and slightly forward to ground mooring anchors or stake them down approximately five feet in front of the wheel. Set the wheel brakes.

h. Moor the rotor blades, as directed in paragraphs 1-46F and 1-46G, for winds up to 30 knots.

i. When winds of 30 knots and higher are forecast and time permits, fold back the rotor blades and secure them as outlined in paragraph 1-44.

Note

Do not attempt to fold or remove blades in winds higher than 30 knots. Damage would be more likely to occur if this were attempted than if the blades remained secured as specified in paragraphs 1-46F and 1-46G.

j. Close the cockpit windows. As climatic conditions dictate, install protective covers as directed in paragraph 1-47. (See figure 1-7.)

k. Disconnect battery.

l. Secure all maintenance stands and loose equipment.

Note

After high winds have subsided, check the helicopter for damage from flying objects. Connect the battery and inflate the struts before flight.

1-46L. If high winds are expected to be variable or shifting, install additional mooring tie-downs as required. Heading the helicopter in the direction of the highest velocity winds is not as critical with the additional tie-downs. The location of mooring anchors in parking areas may make it necessary to position the helicopter as much as 45 degrees from the direction of the expected winds.

1-46M. MOORING ANCHORS. (See figure 1-6A.)

1-46N. When parking area mooring anchors are not available or accessible, use either dead-man type anchors that will sustain a 3000-pound pull without failure or mooring kits, Part No. AN8015-2. Install these kits as follows:

a. Screw anchor rod into arrow.

b. Slip driving rod over anchor rod and into the socket of the arrow.

c. Turn the cam of the driving rod so that the prongs of the arrow are not spread by driving.

d. If ground is hard, break the surface with the ground breaking pin.

e. Align the rod with the airplane mooring fitting, and drive the arrow in the ground until the driving rod handle is approximately three inches from the ground.

f. Rotate driving rod handle 90 degrees and give it a sharp blow to spread arrow prongs.

g. Return the driving rod to the driving position and withdraw.

h. Align the squared socket of the eye assembly with the squared end of the anchor rod; fit it in place and screw the knurled nut down tight.

i. Set the arrow prongs by pulling up on the eye assembly.

Note

Withdraw the anchor rods by turning the eye assembly counterclockwise. Leave arrows in the ground.

1-46O. COLD WEATHER PARKING AND MOORING PROCEDURES.

Note

The following parking and mooring procedures are applicable when the helicopter is being parked during cold or freezing weather. The procedures outlined under paragraphs 1-46A through 1-46N are also applicable to this procedure.

a. Avoid wet or slushy areas when parking the helicopter.

b. To prevent the tires from freezing to the ground, clear any snow from the parking area and place the tires on insulating material.

WARNING

Exercise extreme care when walking or stepping on frost or snow covered surfaces as they will be very slippery. Avoid touching cold metal with bare hands as moist skin will freeze to the metal. Use gloves or other protective clothing.

c. Moor the helicopter securely and release the parking brakes to prevent the brakes from freezing in a locked position.

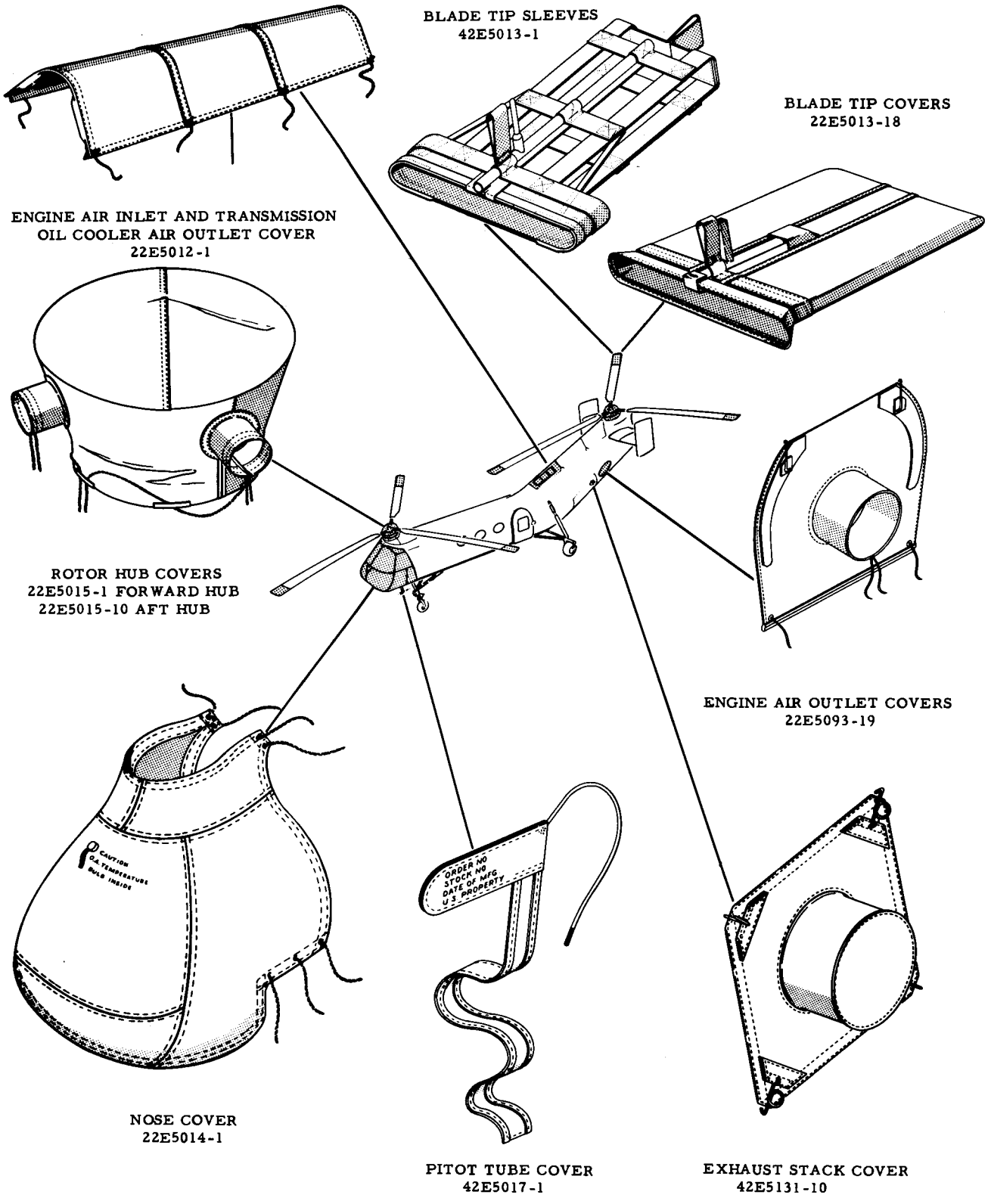

Figure 1-7. Protective Covers

Note

Remote areas in cold climates may require special anchoring installations. See paragraph 1-35, step i.

d. Install the protective covers listed in paragraph 1-47 when the helicopter is parked for more than one-half day at below freezing temperatures and a danger of precipitation exists.

Note

The protective covers should never be installed when they are wet, since this could result in shrinkage or freezing to the surface, resulting in possible surface damage.

e. When the helicopter surfaces are wet or a freezing rain is expected, the helicopter surfaces may be covered with a thin film of de-icing fluid prior to installing the protective covers. This will prevent the covers from freezing to the helicopter.

f. Place covers over the landing gear wheels to prevent snow or rain from entering the brakes and resulting in subsequent freezing.

g. Leave a small air opening in the cabin area when parking the helicopter overnight to reduce the possibility of frost formation on the windows.

1-47. PROTECTIVE COVERS. (See figure 1-7.)

Note

The rotor hub covers and nose enclosure covers for H-21C helicopters, Serial No. 52-8613 and subsequent, are not provided as fly-away equipment. These covers are sent to various supply depots and may be obtained from these sources when needed.

The following protective covers may be used as necessary when mooring the helicopter during extreme weather operations:

Pitot Tube Cover
Engine Air Outlet Covers
Engine Air Inlet and Transmission Oil Cooler Air Outlet Cover
Engine Exhaust Covers
Blade Tip Covers
Blade Covers (full length)
Rotor Hub Covers
Nose Enclosure Cover

CAUTION

Care must be taken when installing or removing the nose enclosure cover so that the external portion of the outside air temperature bulb is not damaged.

1-48. TOWING PROVISIONS.

CAUTION

Before towing the helicopter, be sure that the nose wheel swivel lock is disengaged. Towing with the swivel lock engaged places increased stresses on the towing lugs and will result in failure of the lugs or damage to the nose alighting gear scissors.

Forward towing is accomplished through the use of a special tow bar which is a standard tow bar modified by the addition of adapters to permit installation on the nose alighting gear. The towing provisions on YH-21 helicopters are located on either side of the upper scissors bolt (15, figure 2-44). The towing provisions on H-21A helicopters are located on the shimmy damper centering arm just above the wheel. Towing provisions for H-21B and H-21C helicopters are located at the top of the legs of the yoke assembly into which fit two adjustable lugs on the tow bar. While towing, one crewmember should be stationed inside the helicopter to use the wheel brakes if necessary. Another should be stationed nearby to see that the rotor blades are not damaged by striking objects when towing in close quarters.

CAUTION

Never apply undue pressure to the rotor blades, and, before turning any of them by hand, always be sure that the clutch is disengaged.

1-49. TOWING DURING COLD WEATHER OPERATIONS.

a. Clear any snow or ice from around the wheels to facilitate towing.

b. The helicopter should be towed by the main gear during freezing weather. The large break-away loads imposed by snow, ice, frozen tires, and stiffened grease in the wheel bearings may cause damage to the nose gear.

c. The break-away loads imposed by the tires being frozen to the surface may be reduced by heat application *or* by over-inflation. The applied heat temperature must not exceed 71°C (160°F). Over-inflation must not exceed 1.5 times the normal inflation pressure and must be reduced to normal immediately after the tires are freed.

CAUTION

Do not apply heat to over-inflated tires as the tire pressure would be further increased.

d. Use caution at all times when towing the helicopter during low temperatures as hydraulic seals are easily damaged and strut leakage will result.

e. Open the cabin doors and cockpit windows prior to moving the helicopter from one temperature zone to an extremely higher or lower zone as cracking of the windows may occur.

1-49A. FIELD EXPEDIENCY SUBSTITUTES FOR STANDARD MAINTENANCE PROCEDURES AND TECHNIQUES.

1-49B. GENERAL. The helicopter's unique ability to operate in isolated areas presents the possibility of a shortage of maintenance facilities at remote, temporary operating bases. The following material suggests field expediency substitutes for standard maintenance procedures and techniques in such situations where special tools and equipment are unavailable. As new material relative to alternate methods of maintenance becomes available, it will be added to this section.

1-49C. EMERGENCY HANDLING OF ROTOR BLADES.

1-49D. GENERAL. Any maintenance performed at temporary bases in isolated areas on the rotor blades must be accomplished with extreme care. Access to the blades for inspection or cleaning may be accomplished by standing on top of a truck and slowly backing it away from the helicopter along the blade and repeating the operation on each set. The mechanical details of blade removal are given in Section II under Rotor Group.

1-49E. AFT BLADES. (See figure 1-8.) Removal and installation of the aft rotor blades may be accomplished by using an M-35 6 x 6 truck or any vehicle that has a top 10 feet high or better and capable of supporting personnel. If a hard top truck is not available, place planks across the top of a stake body to form a work platform.

1-49F. FORWARD BLADES. (See figure 1-8.) Removal and installation of the forward blades may be accomplished by utilizing the fuselage as a work platform and a ladder to permit lowering or raising blades.

1-49G. EMERGENCY HANDLING OF POWER PACKAGE.

1-49H. The power package, figure 1-8A, is normally changed by use of a special dolly, but a flat-bedded platform on skids or wheels to form a dolly may be used as a "last resort" substitute. The dolly must be prepared for receiving the power package by covering it with partially filled sandbags to provide support, prevent rolling, and prevent the engine from being damaged by any hard surfaces. Position the dolly beneath the

Figure 1-8. Field Expediency for Rotor Blade Removal

Figure 1-8A. Field Expediency for Power Package Removal

engine compartment, lower the power package onto the sandbags, securely tie the power package to the dolly, and tow it carefully away from under the fuselage.

Note

Soaking the sandbags with water will prevent sand spillage if the bag is pierced.

1-49I. EMERGENCY HANDLING OF TRANSMISSIONS.

1-49J. ROTOR TRANSMISSIONS. (See figure 1-8B.) Rotor transmission removal and installation may be accomplished as follows: Chainfall, mobile crane, or block and tackle. The use of the first two items is standard, but a block and tackle may be used for extended field operation. Rig the block and tackle on a tree limb and support the limb by tying in supporting rope or cable to limbs higher up in the tree. With no other lifting facilities available, two block and tackle rigs are necessary to change transmissions. Before using the rig, test it by lifting a rotor transmission in its shipping container clear of the ground and let it hang for a few minutes. Since the container and transmission weigh approximately 920 pounds and the built-up forward transmission weighs only approximately 829 pounds, the rig as tested is safe.

Replace the transmission as follows:

a. Remove the aft transmission. This is necessary since it will reduce the possibility of the helicopter becoming tail heavy and tipping as it is moved from under one hoisting rig to the other.

b. Move the helicopter under the second hoisting rig, remove the transmission, roll the helicopter clear, and lower the transmission.

c. The transmissions must be mounted on work stands while one is being stripped and the other built up. A stand may be conveniently arranged by using four 55 gallon drums and two 2 by 4-inch planks seven feet long. Place the drums in a square with a clearance of approximately two feet between drums. Lay each 2 by 4-inch plank across two drums and lower the transmissions to bring the transmission torque plates to bear on the planks. This prevents metal-to-metal contact which might damage the torque plate.

d. After the new transmissions are built up, install the forward transmission then the aft transmission, in that order.

1-49K. CENTRAL TRANSMISSION. The central transmission may be removed and installed without any special equipment by using four men, three men holding the transmission while one man removes the bolts, and exercising care to protect exposed parts. After removal of the bolts, lower the transmission to the cabin floor making sure padding is used to protect the transmission and the floor. Lift the transmission from the cargo floor and place it on a prepared spot where sand bags or padding will protect it while it is being stripped.

1-50. COLD WEATHER GROUND HEATING PROVISIONS.

1-51. DESCRIPTION. Provisions are included for applying heat to the helicopter cabin and

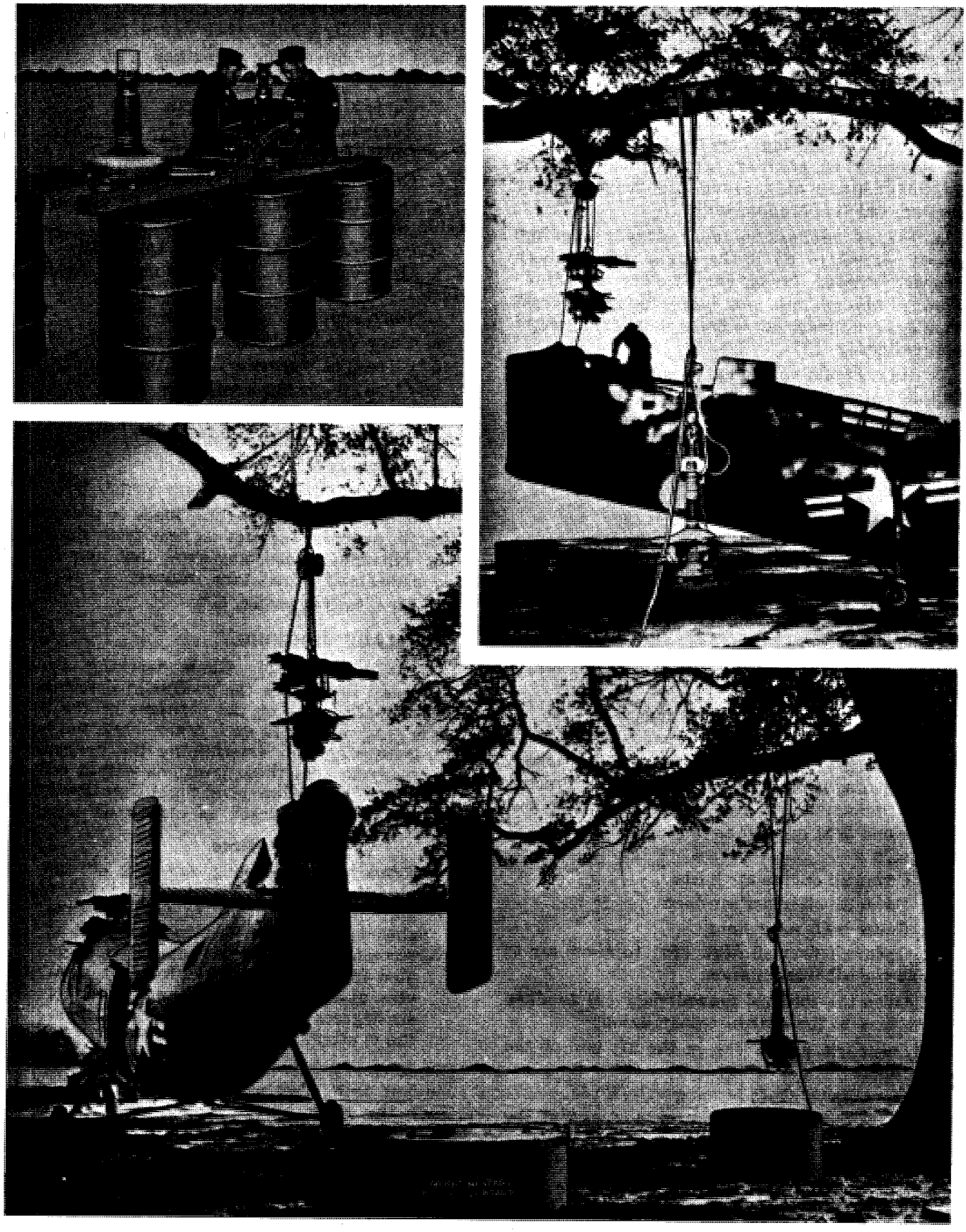

Figure 1-8B. Field Expediency for Rotor Transmission Removal

cockpit in low temperatures to ensure the operation of instruments and equipment within the helicopter, to reduce windshield frosting, and to increase crew comfort. Provisions are also included for warming the engine compartment, drive shaft bearings, and transmissions prior to take-off. This heating may be accomplished by using either an auxiliary ground heater or the helicopter heater only, provided sufficient battery current and fuel are available.

a. Engine preheat is not normally required above −18°C (0°F) if the engine oil has been properly diluted during engine shutdown. However, if the oil has not been diluted, preheat should be applied at outside temperatures of approximately 2°C (35°F).

b. Heat should be applied to both the induction and accessory sections of the engine until the cylinder head temperatures reach 20°C (68°F) or until fluid oil can be drained from the Y-drain valve.

CAUTION

Do not blast heated air at temperatures in excess of 122°C (250°F) against ignition harness, flexible hose, self sealing tanks, or other rubberized or fabric material.

1-52. GROUND HEATING PROCEDURE WITH AUXILIARY UNIT. (See figure 1-9.)

a. Cover both engine air outlets.

b. Connect the auxiliary ground heater (11) to one of the engine air outlets. In extremely cold climates, additional ducting may be directed to the induction and accessory sections of the engine and heat applied as directed in paragraph 1-51, step b.

c. Cover all engine air inlets.

d. Cover all oil cooler air ducts.

e. Cover both rotor hubs.

f. Open aft firewall door (10) to allow air to flow to the aft transmission.

g. Open the forward firewall door (9) to allow air to flow to the central transmission.

h. Open iris valves (8) in the aft end of the cabin duct.

i. Open drive shaft bearing valves (6).

j. Open valve (7) at the forward end of the cabin duct.

k. Make sure that no rotor blade is positioned directly over the fuselage as heat from the fuselage will tend to melt any snow that may be on the blades and it may turn into ice.

l. Start the auxiliary heater unit.

1-53. GROUND HEATING PROCEDURE WITH HELICOPTER UNIT. (See figure 1-9.)

a. Cover both engine air outlets.

b. Cover all engine air inlets.

c. Cover all oil cooler air ducts.

d. Cover both rotor hubs.

e. Open aft firewall door (10).

f. Open forward firewall door (9).

g. Open iris valves (8) in the aft end of the cabin duct.

h. Open drive shaft bearing valves (6).

i. Open valve (7) at forward end of the cabin duct.

j. Open adapter valve (3) wide.

k. Close windshield defroster units (1).

l. Close foot warmers (2) in the cockpit.

m. Close all window ventilators.

n. Close all cabin duct anemostats (5).

o. Close all doors and windows.

p. Attach auxiliary power unit.

q. Turn auxiliary fuel pump switch ON.

r. Make sure that no rotor blade is positioned directly over the fuselage as heat from the fuselage will tend to melt any snow that may be on the blades and it may turn into ice.

s. Turn heater switch ON.

1-54. BLADE TRACKING.

1-55. DESCRIPTION. Blade tracking is the term used to describe the process of determining the tip path plane or the positions of the rotor blade tips relative to each other while the rotor set is turning and determining the corrections necessary to hold these positions within certain tolerances. To produce good flight characteristics, the blades should track as closely as possible.

Note

Tracking in the early morning or immediately following inclement weather may be difficult due to the moisture absorption of the wooden blades. It is recommended that the rotors be operated for a period of five to seven minutes, at a pitch setting of approximately six degrees or greater, before any tracking is attempted.

Displacement between blades must not exceed one-half inch. Two procedures may be used to track the rotor blades. The first procedure is short and should produce satisfactory flight conditions. It consists of a one-point track taken at a constant engine speed and high manifold pressure, with adjustment of *pitch links only* as necessary to correct for any spread of the blades. All rotor blades should be tracked by this method. The second procedure requires a longer

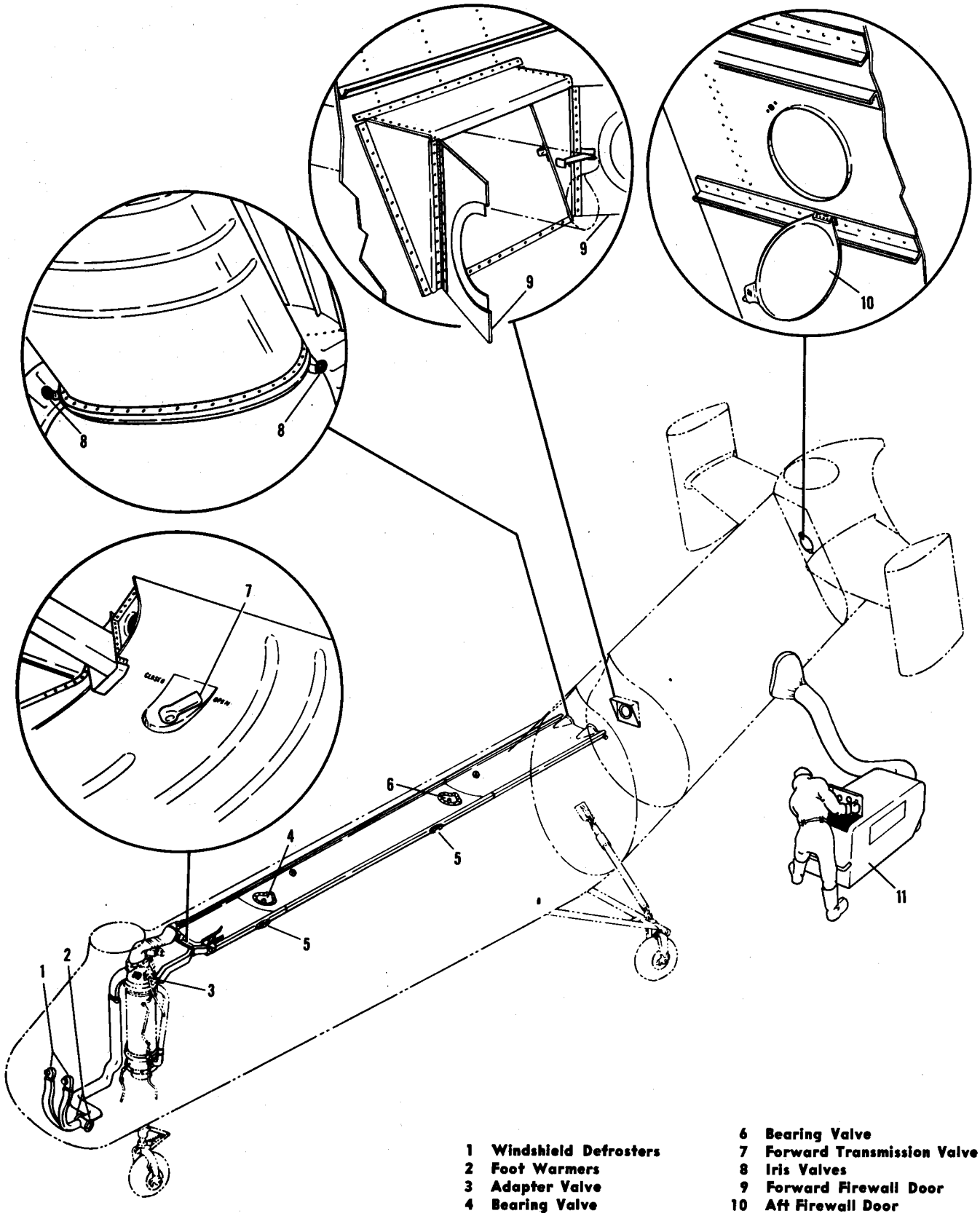

Figure 1-9. Ground Heating

period of time but shows the tendency for the track to change as power and rotor speed are varied. The second procedure is to be used *only* if the first procedure fails to produce satisfactory flight conditions and investigation has eliminated all other possible causes of excessive vibration.

Note

During manufacturing and at overhaul, the rotor blades are tracked and their pitching moments balanced. Tracking by the second procedure requires bending of the trailing edge or trim tabs which automatically alters the pitching moment balance. Therefore, when tracking the rotor blades, always follow the first procedure and use the second procedure *only* if the first procedure fails to produce satisfactory flight characteristics and investigation has eliminated all other possible causes of excessive vibration.

1-56. TRACKING POLE AND FLAG.

1-56A. DESCRIPTION. (See figure 1-9A.) The tracking pole assembly (1) is made up of four major parts, the base (2), the pole (10, 15, and 18), the flag supports (19), and the flag (29). The base is made from steel, and it is sufficiently movable to permit proper positioning. Positioning is important because the flag should contact the blades, as illustrated in figure 1-10, after the pole has been raised from the ground only about 80 degrees (instead of 90 degrees). In case the blade inadvertently hits the tracking pole, this insures that the impact will thrust the pole back and down instead of pulling it into the rotors. The pole assembly (10, 15, and 18), should be light enough for easy lifting and manipulation. Pole height may be quickly adapted to changes in the height of blades as their pitch is varied and to adjust the space between successive sets of hits for easy identification. The pole is telescopically adjustable by insertion of a pin assembly (14) for pole heights from 175 inches to 269 inches above ground. This provides flag center heights of 149 inches to 233 inches above ground. Also, to enable maximum "flag man" control at the moment of contact with the blades, the pole has a handle (11) located at shoulder height. The flag supports (19), while enabling contact with the flag, provide sufficient clearance between the flag and the pole to prevent a blade from hitting the pole. The flag supports hold the flag tightly and yet permit easy replacement of flags. These supports permit stretching each support bungee shock cord until its S-hook (28) can be removed from the flag grommet. The flag (29) is sufficiently strong and elastic to sustain momentary blade impact. It is made from balloon cloth, folded double for additional thickness and strength, with canvas-reinforced ends which contain the S-hook attachment grommets. The flag should be held rigidly enough to prevent its being deflected by the blade wash. Four bungee shock cords, Spec MIL-C-5650, are used to stretch the flag taut. The flag provides sufficient space for all eight hits of one complete tracking run if both sides are used. Dimensions and method of assembly are shown on figure 1-9A.

1-56B. PERSONNEL AND EQUIPMENT. (See figures 1-10 and 1-10A.) A crew of three men and a qualified helicopter pilot are necessary to perform the tracking operation. The equipment necessary to perform the tracking operation includes a tracking flag and pole (figure 1-9A), a work stand for the signalman, and tracking cards similar to those shown in figure 1-10A. One of the crewmen acts as a signalman and should be stationed on a work stand or platform in a position such that he can direct the other two crewmembers while the tracking flag is being raised. The platform or work stand should be placed approximately 50 feet in front of and 22 feet to the right of the helicopter.

Note

When tracking the rotor blades, the tracking flag should be stationed on the rescue door side of the fuselage directly opposite the hub of the blades to be tracked. This will permit the pilot to observe the tracking operation so that he can quickly shut down should anything go wrong. It also prevents the tracking pole from being thrown against the fuselage if the flagmen inadvertently lose control of it.

1-57. FIRST PROCEDURE (ONE-POINT TRACK).

Note

Tracking is best accomplished in still air and should not be attempted in gusty air or in steady winds exceeding 15 knots. When tracking in winds exceeding seven knots, two or three traces should be taken and the average spread of the points used for correction purposes.

If a helicopter is flying rough, the following procedure may be utilized to track the rotor blades:

Note

When installing a set of new or overhauled blades on a helicopter, the pitch

links must be set to their nominal length of 11-9/16 (11.562) inches between bolt holes prior to tracking. A tool (figure 2-5A) can be manufactured to measure the pitch links for nominal length.

a. Prepare a color mixture of red, yellow, and green paint, each mixed with an appropriate amount of Fuel Lube 44, Grease (gas and oil resistant), Spec MIL-L-6032, until the desired color and mixture is obtained. This type of color mixture is more desirable than grease pencils, especially in cold climates, and many hits from one application may be obtained. Place two strips of masking tape over the chordwise center line of the tip, approximately 1/16 inch apart, and apply the color corresponding to the color painted on the blade tip so the blades can easily be identified. Apply the color mixture with a brush, felt applicator, sponge applicator, or other suitable means. After the color has been applied, remove the masking tape and head the helicopter into the wind.

CAUTION

The nose wheel lock must be engaged when tracking to prevent the helicopter from swinging with sudden changes in wind direction.

b. Rotate the blades by hand until one of the blades is in tracking position, then raise the tracking flag into position so that the blade tip will touch the tracking flag when the blades are rotating. The blade tracking pole should be approximately 12 inches outside the circumference of the blade circle. Mark the position of the butt of the tracking pole on the ground.

c. Adjust the tracking pole so that the blades will mark the tracking flag approximately at its center when tracking rpm and collective pitch are reached.

d. Load the helicopter to the normal gross weight.

e. Have the pilot adjust the throttle to 2500 engine rpm and increase the collective pitch until the manifold pressure indicator shows between 26 and 30 inches Hg.

Note

The pilot must not move the controls or change power settings while traces are being taken. Such actions will cause erroneous marking of the tracking flag.

f. At this point, take a "trace" on the tracking flag. All three blades will mark the flag.

Note

Since the center blade mark on the first "trace" is invariably used as a reference blade, it must be kept as the reference blade throughout the entire tracking procedure. Changing reference blades at each tracking check may cause a lack of forward cyclic stick.

g. Measure the distance between the center mark and the outer two marks on the tracking flag. The total distance between the high and low marks should not exceed one-half inch.

h. If the outer marks are not within tolerance, the outer marks may be brought close to the center mark by adjusting the length of the pitch links. To bring the high blade closer to the center mark, shorten the pitch link of the high blade by turning the pitch link barrel one-half turn for each inch above the center mark. To bring the low blade closer to the center mark, lengthen the pitch link of the low blade by turning the pitch link barrel one-half turn for each inch below the center mark. The average length of the three pitch links should not be changed by more than 1/32 (0.031) inch (one-half turn of the turnbuckle barrel) by the tracking procedure. To determine the *average* setting, add all adjustments algebraically and divide the result by three as follows:

EXAMPLE:
Red blade + 1 turn
Green blade − 3/4 turn
Yellow blade 0 turn
Summation + 1/4 turn
Average $\frac{+1/4}{3} = +1/4 \times 1/3 = +1/12$ turn

Thus the average change in this instance is +1/12 turn, well within the required limits of one-half turn of the turnbuckle barrel. Correcting adjustments should be divided as evenly as possible between all blades to minimize the overall effect of the pitch adjustments on the total collective pitch of the rotor. The aforementioned setting is not an established limit but is an *average* setting for all three pitch links. The limit of adjustment for each pitch link is 0.44 inch, which is equivalent to seven turns in either direction from the nominal length. Compliance with this limit will ensure at least one inch of thread of the shaft inside the terminal when increasing the length of the pitch link. If more than seven turns are required, an investigation should be immediately conducted to determine the reason for such excessive pitch link adjustment. *All final pitch link adjustments should be entered in the applicable maintenance form and added or subtracted to subsequent adjustments made to the same links to assure that the limits established for pitch link lengths are not exceeded.*

i. Recheck the track under the conditions listed in step e. The marks should be as close together

Index No.	Qty Reqd	Nomenclature	Size (dimensions in inches)	Material	Material Spec or Notes
1	1	Blade Tracking Flag Pole Assembly	22E5944		
2	1	Pole Base Assembly	22E5944-4		
	1	Base	0.50 x 8.00 x 12.25	HRS	
3	4	Gusset	0.375 x 2.00 x 2.25	HRS	
4	2	Horizontal Support	0.375 x 4.00 x 2.50	HRS	
5	2	Vertical Support	0.375 x 4.00 x 4.25	HRS	
6	1	Shaft	0.50 dia x 4.00 lg	CRS	
7	2	Bolt	AN4-24A		
	2	Nut	AN363-428		
8	2	Washer	AN960-816		
9	1	Tube	2.50 OD x 0.049 wall x 3.25 lg	4130 Steel Tube	
10	1	Tube	2.00 OD x 0.049 wall x 117.00 lg	61 ST-6 Alum. Alloy	WW-T-789a
11	1	Handle	22E5944-2		
	1	Tube (clamp)	2.125 OD x 0.049 wall x 2.75 lg	4130 Steel Tube	
	1	Tube	0.05 OD x 0.093 wall x 1.50 lg	4130 Steel Tube	
	1	Tube	1.00 OD x 0.065 wall x 8.50 lg	4130 Steel Tube	
12	1	Bolt	AN4-16A		
	1	Nut	AN363-428		
13	2	Washer	AN960-416		
14	1	Pin Assembly	22E5944-1		
	1	Handle	0.375 dia x 5.00 lg	CRS	
	1	Pin	0.375 dia x 4.50 lg	CRS	
	1	Sash Chain	8.00 lg	No. 8 Bronze	
	1	Screw	AN515-6-3		
	1	Clamp	AN742-32		
	1	Screw	AN520-10-8		
	1	Nut	AN345-10		
15	1	Tube	1.875 OD x 0.058 wall x 144.00 lg	61 ST-6 Alum. Alloy	WW-T-789a
16	1	Tube	2.00 OD x 0.049 wall x 12.25	61 ST-6 Alum. Alloy	WW-T-789a
17	4	Bolt	AN4-23A		
	4	Nut	AN363-428		
18	1	Tube	1.875 OD x 0.058 wall x 27.00 lg	61 ST-6 Alum. Alloy	WW-T-789a
19	2	Arm Assembly	22E5944-3		
20	4	Bolt	AN4-25A		
	4	Nut	AN363-428		
21	2	Tube	2.25 OD x 0.188 wall x 4.50 lg	4130 Steel Tube	
22	2	Tube	1.00 OD x 0.065 wall x 18.50 lg	4130 Steel Tube	
23	2	Gusset	0.25 x 3.00 x 3.25	4130 Steel	
24	2	Shackle	AN115-80		
25	2	Bolt	AN6-10A		
	2	Nut	AN365-624		
26	2	Eyebolt	G277 Laughlin Eyebolt		
27	4	Shock Cord	0.3125 dia x 20.00 lg		MIL-C-5650
28	4	S-Hook	1.625	2810 Sargent S-Hook	
29	1	Blade Tracking Flag	22E5943		
30	4	Grommet	AN230GA10		
31	4	Washer	AN230WA10		
32	2	Canvas Reinforcement	3.00 x 2.50	12 oz Canvas	
33	1	Balloon Cloth	7.00 x 38.00	Balloon Cloth	JAN-C-332

Figure 1-9A. Blade Tracking Pole and Flag (Sheet 1 of 2)

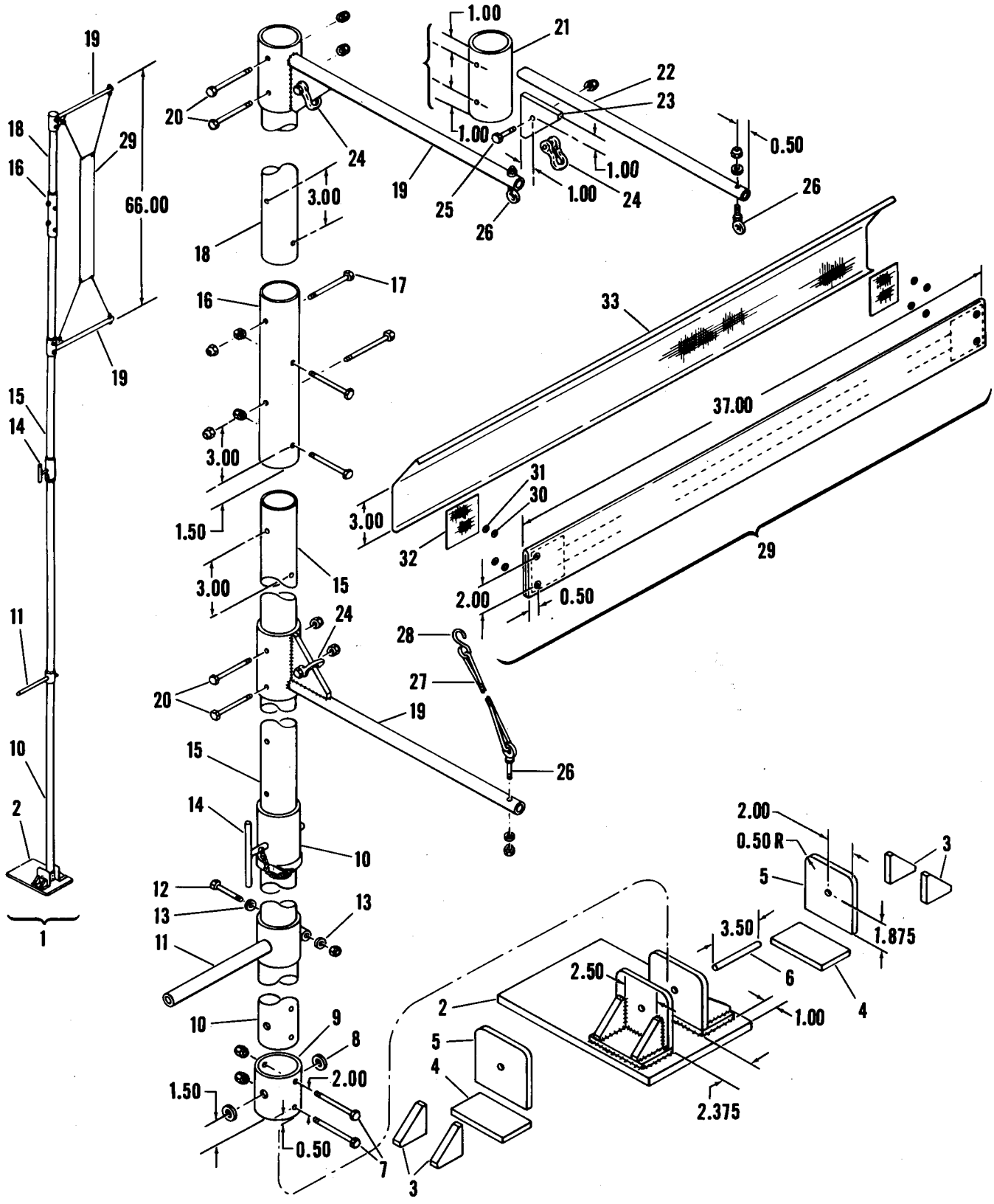

Figure 1-9A. Blade Tracking Pole and Flag (Sheet 2 of 2)

Figure 1-10. Blade Tracking

as possible. However, spacing between the marks is permissible, provided the over-all displacement between the high and low blades does not exceed one-half inch. Adjust the pitch link length as necessary to bring the tracking marks together.

j. Flight-test the helicopter to check for smoothness in flight. The cyclic stick should be checked with the helicopter in a cross-wind hovering position. If the cyclic stick is too far forward or aft of the hovering position, the lengths of the pitch links will have to be adjusted to bring the stick back to the hovering position. Shortening the pitch links of the forward rotor and lengthening the pitch links of the aft rotor *equally* by one full turn of the barrel will move the stick aft by approximately one inch. If the stick is too far aft, reverse the procedure, shortening the aft links and lengthening the forward pitch links.

Note

If the blades have been retracked many times since the last rigging check, it is desirable to check the autorotational rpm of the helicopter. If the rpm is not within the correct limits, decrease the lengths of all pitch links (both rotors) by equal amounts to increase the rpm; increase the lengths of all pitch links by equal amounts to decrease the rpm. The correct autorotational limits for both wooden and metal blades are found in the applicable Flight Handbook.

1-58. SECOND PROCEDURE. The second procedure is to be used *only* if the first procedure fails to produce satisfactory flight conditions and investigation has eliminated all other possible causes of excessive vibration. Tracking by the second procedure requires adjustment of the tracking weights and bending of the trailing edge tab which will alter the pitching moment balance of the blades. When tracking by the second procedure, it is necessary to track against engine rpm (flat pitch) and manifold pressure (collective pitch). This tracking procedure cannot be considered complete until both the flat pitch and collective pitch tracks have been accomplished and adjustments made as required. The procedure to be followed is described in the following paragraphs.

Note

When tracking the rotor blades, the tracking flag should be stationed on the rescue door side of the fuselage directly

opposite the hub of the blades to be tracked. This will permit the pilot to observe the tracking operation so that he can quickly shut down should anything go wrong. It also prevents the tracking pole from being thrown against the fuselage if the flagmen inadvertently lose control of it.

1-59. GENERAL INSTRUCTIONS FOR SECOND PROCEDURE. The following procedure should be followed to obtain traces for either the rpm (flat pitch) or manifold pressure (collective pitch) track. Four traces should be taken for each condition to determine the blade tip position.

Note

When installing a set of new or overhauled blades on the helicopter, the pitch links must be set to their nominal length of 11-9/16 (11.562) inches between bolt holes prior to tracking.

a. Follow the instructions outlined in steps a. to d. of the first procedure.

b. Have the pilot start the engine and engage the rotors. When the desired tracking rpm or manifold pressure as specified in paragraphs 1-60 and 1-60A is reached, raise the tracking flag and take the first trace.

Note

The pilot should not move the controls or change the power settings while traces are being taken. Such actions will cause erroneous marking of the tracking flag.

c. Lower the tracking flag and transfer the marks to a tracking card similar to the one shown in figure 1-10A. Also, circle the area of the trace on the tracking flag with a grease pencil and identify the circled areas as to their sequence in the tracking procedure.

d. Second trace—Adjust the blade pole so that the second trace will appear slightly above the first trace. Raise the tracking flag and take the second trace.

e. Repeat steps c. and d. to obtain the two additional traces.

Note

All traces on the flag should be at least eight inches from the top and bottom grommets of the flag.

1-60. RPM (FLAT PITCH) TRACK. The rpm (flat pitch) track will show the relative positions of the rotor blade tips during an increase in engine rpm. Analyses and corrections for the rpm (flat pitch) track are made as follows:

a. With the collective pitch lever full down, take traces as directed in paragraph 1-59 at engine speeds of 1900, 2100, 2300, and 2500 rpm.

Note

The pilot should not move the controls or change the power settings while traces are being taken. Such actions will cause erroneous marking of the tracking flag.

b. Select the blade making the center of the three marks in the first trace and place it at zero on the rpm (flat pitch) tracking card. This blade is now the reference blade and is placed on the zero line for the rest of the traces.

Note

When transferring the tracking marks from the flag to the card, care must be exercised to see that the side of the card marked UP is toward the top of the tracking flag.

c. Transfer the marks for each of the rpm traces to the tracking card. Be sure to record the marks for each trace on the line corresponding to the rpm at which the trace was taken.

d. Draw a straight line through the points for each blade such that the line represents the average for all the points of the blade being tracked. At least three of the four points should be within one-quarter inch of the average line. The chart now presents a graphic picture of the track change as rpm increases.

Note

For convenience in making and reading the lines, use colored pencils of the same color as the blade being tracked.

e. The instructions in this step are for rotor blades with trim tabs. For rotor blades without trim tabs follow the instructions in step f. The lines representing the blade positions should be parallel and should coincide. If the lines are not *parallel,* bend the trim tab on the trailing edge of each blade as required to bring the lines parallel. Bending the tab up will cause the line to rise during an increase in rpm. Bending the tab down will have the opposite effect. For each degree of tab bend, the slope of the line for the blade being adjusted will change by approximately one-quarter inch over the full tracking rpm range pivoting about the first tracking point. At the same time the line on the card will translate from the first tracking point by approximately one-quarter inch in the direction of tab bend. Do not bend any tab more than 10 degrees in any one direction. When bending the tabs on wooden blades, care should be exercised

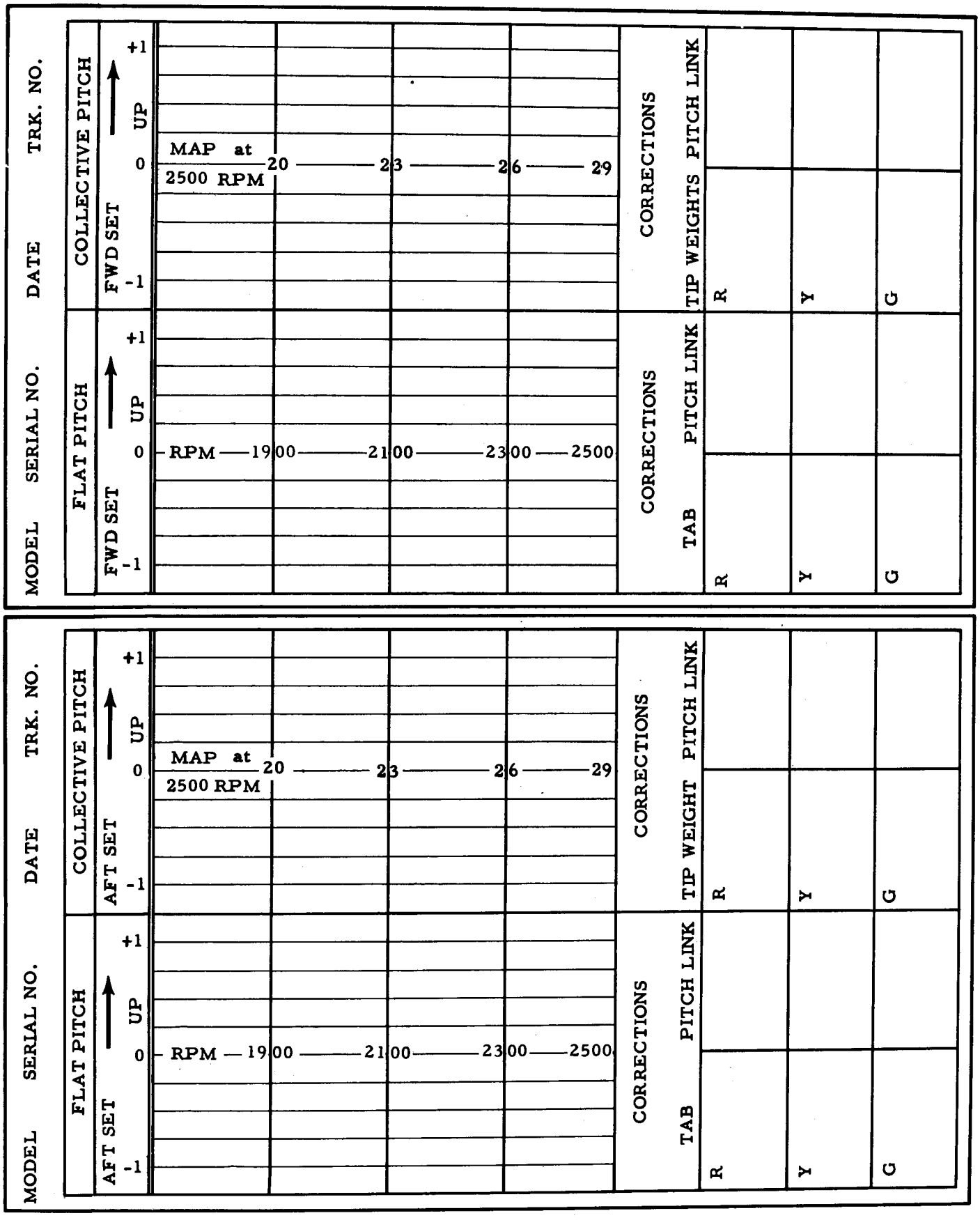

Figure 1-10A. Sample Tracking Cards

to prevent bending of the trailing edge reinforcing strip.

Note

The trailing edge tabs are used only to make the slopes of the rpm track lines parallel. Any displacement changes required to bring the parallel lines together must be obtained by pitch link adjustment.

f. If the lines are not parallel on rotor blades without trim tabs, replace the blade set with a set that has trim tabs. The rotor blades without trim tabs are to be returned to the proper maintenance facilities to have trim tabs installed.

g. Once the lines have been made parallel, they may be brought together by adjusting the pitch links. One-half turn of the pitch link barrel will change the blade tip position by approximately one inch. To move the line on the tracking card up, increase the length of the link. To bring the line down, decrease the length of the link. The average length of the three pitch links should not be changed by more than 1/32 (0.031) inch (one-half turn of the turnbuckle barrel) by the tracking procedure. To determine the *average* setting, add all adjustments algebraically and divide the result by three as follows:

EXAMPLE:

Red blade + 1 turn
Green blade − 3/4 turn
Yellow blade 0 turn
Summation + 1/4 turn
Average $\frac{+1/4}{3} = +1/4 \times 1/3 = +1/12$ turn

Thus the average change in this instance is +1/12 turn, well within the required limits of one-half turn of the turnbuckle barrel. Correcting adjustments should be divided as evenly as possible between all blades to minimize the overall effect of the pitch adjustments on the total collective pitch of the rotor. The aforementioned setting is not an established limit but is an *average* setting for all three pitch links. The limit of adjustment for each pitch link is 0.44 inch, which is equivalent to seven turns in either direction from the nominal length. Compliance with this limit will ensure at least one inch of thread of the shaft inside the terminal when increasing the length of the pitch link. If more than seven turns are required, an investigation should be immediately conducted to determine the reason for such excessive pitch link adjustment. *All final pitch link adjustments should be entered in the applicable maintenance form and added or subtracted to subsequent adjustments made to the same links to assure that the limits established for pitch link lengths are not exceeded.*

h. Recheck the track under the conditions listed in the preceding steps. The marks should be as close together as possible. However, spacing between the marks is permissible, provided the over-all displacement between the high and low blades does not exceed one-half inch and the slope of the line of any blade relative to the reference blade does not exceed one-quarter inch

in 600 engine rpm. Adjust the pitch link length as necessary to bring the tracking marks together.

1-60A. MANIFOLD PRESSURE (COLLECTIVE PITCH) TRACK. The manifold pressure (collective pitch) track will show the relative positions of the blade tips during an increase in manifold pressure (collective pitch). Analyses and corrections for the manifold pressure (collective pitch) track are made as directed below:

a. Following the preparations described in paragraph 1-59 with the engine running and the rotors engaged, increase the throttle until engine speed reaches 2500 rpm.

b. Raise the collective pitch lever until the manifold pressure indicator shows 20 inches Hg. Take the first trace as directed in paragraph 1-59. Take additional traces at manifold pressures of 23, 26, and 29 inches Hg.

Note

The pilot should not move the controls or change the power settings while traces are being taken. Such actions will cause erroneous marking of the tracking flag.

c. Select the blade making the center of the three marks in the first trace and set it at zero on the manifold pressure (collective pitch) tracking card. This blade is now the reference blade and is set on the zero line for the rest of the traces.

d. Transfer the marks for each of the manifold pressure traces to the tracking card. Be sure to record the marks for each trace on the line corresponding to the manifold pressure at which the trace was taken.

Note

When transferring the tracking marks from the flag to the card, care must be exercised to see that the side of the card marked UP is toward the top of the tracking flag.

e. Draw a straight line through the points for each blade such that the line represents the average for all the points of the blade being tracked. At least three of four points should lie within one-quarter inch of the average line. The chart now presents a graphic picture of the track change as manifold pressure increases.

Note

For convenience in making and reading the lines, use colored pencils of the same color as the blade being tracked.

f. The lines representing the blade positions should be parallel and should coincide as closely as possible. If the lines are not parallel, the tracking weights located in the blade tip must be adjusted. Adding weights to the trailing edge tracking weight cylinder will cause the line to rise with an increase in manifold pressure. Adding weights to the leading edge tracking weight cylinder will have the opposite effect.

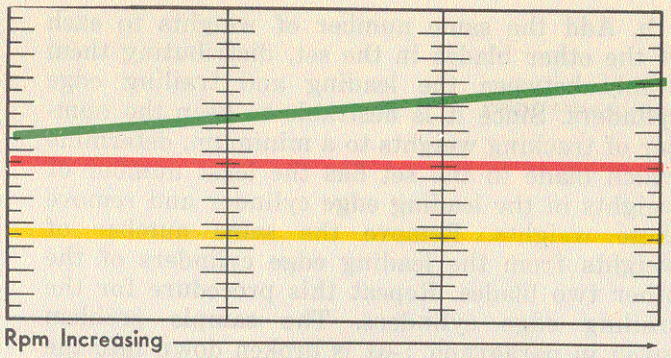

RPM PLOT

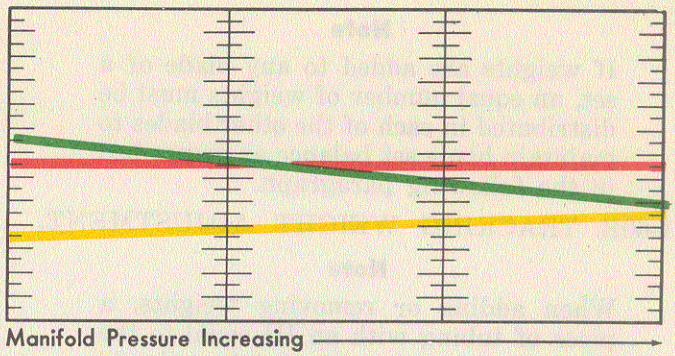

MANIFOLD PRESSURE PLOT

SAMPLE TRACKING PLOTS

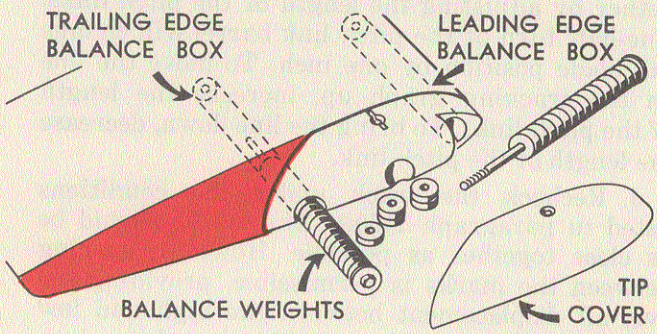

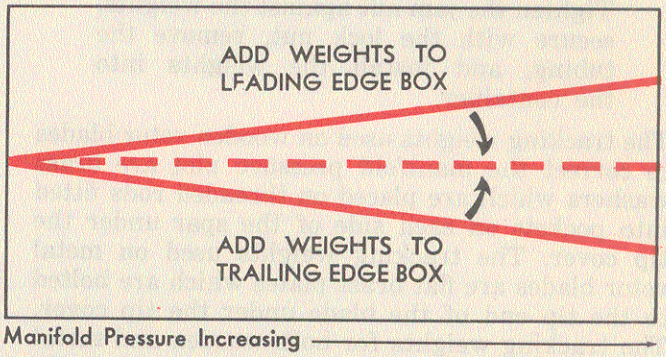

BALANCE WEIGHT CORRECTIONS

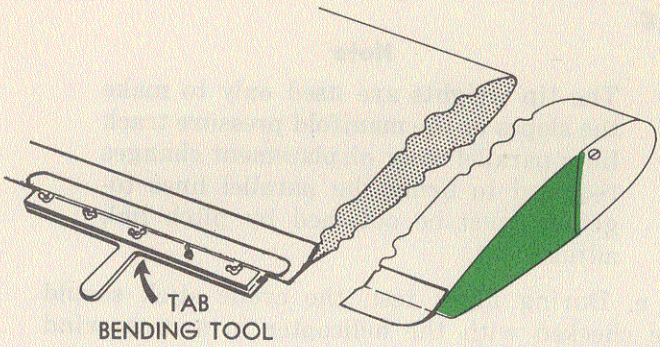

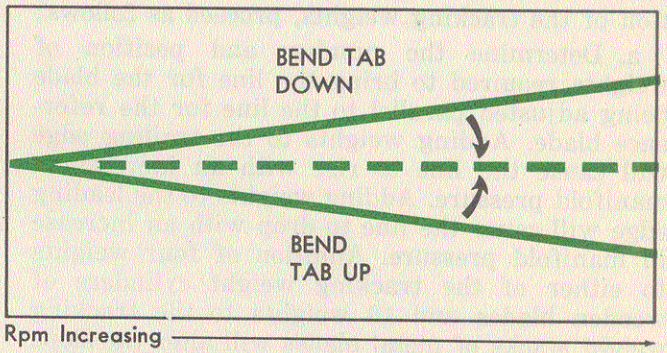

TRAILING EDGE TAB BENDING CORRECTIONS

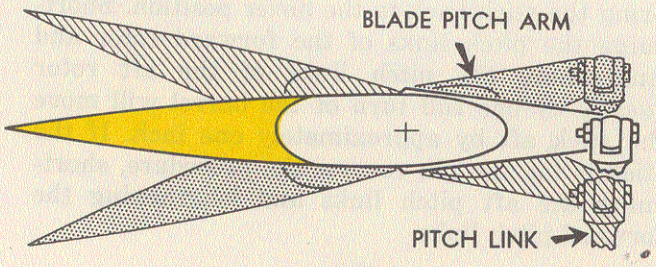

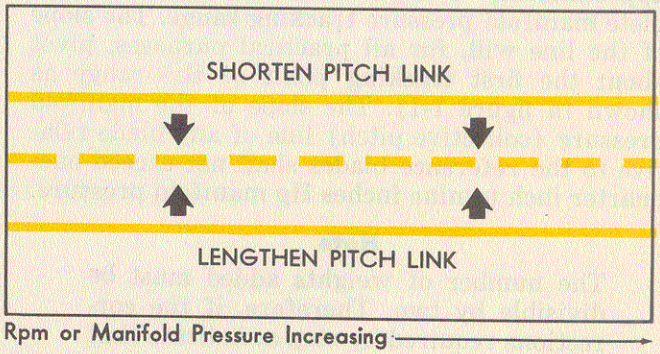

PITCH LINK CORRECTIONS

Figure 1-11. Blade Tracking Corrections

Note

If weights are added to any blade of a set, an equal number of weights must be distributed in each of the other blades to maintain blade set balance as prescribed in the following paragraph.

1-60B. TRACKING WEIGHT ADJUSTMENT.

Note

When adding or removing weights, a piece of tubing with an ID equal to the ID of the blade weight container should be slipped over the weights. This will align the weights, insure a free fit inside the blade weight container, and prevent damage to the retention nut plate. Tighten the jam nut against the weights, secure with the lock nut, remove the tubing, and install the weights into the container.

The tracking weights used on wooden rotor blades to correct the manifold pressure plot are brass washers which are placed on threaded rods fitted into pockets on each side of the spar under the tip cover. The tracking weights used on metal rotor blades are flat brass plates which are bolted to the tip end of the blade under the tip cover. The tracking weights for both wooden and metal blades are accessible after removing the blade tip cover. To determine the requirement and distribution of the tracking weights, proceed as follows:

a. Determine the number and position of weights required to bring the line for the blade being adjusted parallel to the line for the reference blade. Adding weights to the trailing edge will cause the line to rise with an increase in manifold pressure. Adding weights to the leading edge will cause the line to drop with an increase in manifold pressure. Addition of four weights to either of the tracking weight cylinders of wooden blades and 10 weights to the tracking weight stacks of metal blades will alter the slope of the tracking plot for the adjusted blade by approximately one-quarter inch over the complete manifold pressure tracking range. The slope of the line will, for all practical purposes, pivot about the first tracking point of the range as shown in figure 1-11. The slope of the manifold pressure (collective pitch) line of any blade relative to the reference blades shall not exceed one-quarter inch in nine inches Hg manifold pressure.

Note

The number of weights added must be divisible by two. Therefore, if the corrections required by step a. indicate that an uneven number of weights are required, add the nearest even number of weights which will provide the desired result.

b. Add the same number of weights to each of the other blades in the set, distributing them evenly between the leading and trailing edge cylinders. Since it is desirable to keep the number of tracking weights to a minimum, determine which blade in the set has the least number of weights in the leading edge cylinder and remove these weights. Remove the same number of weights from the leading edge cylinders of the other two blades. Repeat this procedure for the trailing edge cylinders. The sample problem given in paragraph 1-61 is broken down into the steps necessary to determine the correct tracking weight distribution.

c. After a parallel tracking line relationship has been obtained, the lines may be brought together by adjusting the length of the pitch links. One-half turn of the pitch link barrel will change the blade position by one inch. To move the line on the tracking graph up, increase the length of the pitch links. To bring the line down, decrease the length of the pitch link.

d. Recheck the track under the conditions listed in paragraph 1-60A. The marks should be as close together as possible. However, spacing between the marks is permissible, providing the over-all displacement between the high and low blades does not exceed one-half inch and the slope of any one blade relative to the reference blade does not exceed one-quarter inch in nine inches Hg.

Note

The tip weights are used only to make the slopes of the manifold pressure track lines parallel. Any displacement changes required to bring the parallel lines together must be obtained by pitch link adjustment.

e. During flight test, the cyclic stick should be checked with the helicopter in a cross-wind hovering position. If the cyclic stick is too far forward or aft of the hover position, the lengths of the pitch links will have to be adjusted to bring the stick back to the hover position. Shortening the pitch links of the forward rotor and lengthening the pitch links of the aft rotor *equally* by one full turn of the barrel will move the stick aft by approximately one inch. If the stick is too far aft, reverse the procedure, shortening the aft pitch links and lengthening the forward pitch links.

Note

If the blades have been retracked many times since the last rigging check, it is desirable to check the autorotation rpm of the helicopter. If the rpm is not with-

in the correct limits, decrease the lengths of all pitch links (both rotors) by equal amounts to increase the rpm; increase the length of all pitch links by equal amounts to decrease the rpm. The correct autorotation rpm limits for both wooden and metal rotor blades are found in the applicable Flight Handbook.

1-61. SAMPLE BALANCE WEIGHT PROBLEM. (See table 1-1A.)

a. It has been determined from the manifold pressure tracking plot that the red blade will require seven weights in the trailing edge box and the green blade will require three weights in the leading edge box to bring their lines parallel to the line of the yellow reference blade (table 1-1A, calculation 1).

b. Since it is necessary to use an even number of weights, change the weights required by the red blade to six and the weights required by the green blade to two (table 1-1A, calculation 2). Always consider the reference blade as being the correct blade in the set; never add weights to it other than those required to maintain balance in the rotor set.

c. To maintain blade set balance, the same number of weights must be added to each blade in the set. Therefore, take the largest number of weights required by any single blade and add that amount to all blades. Since the red blade requires the most (six in the trailing edge box), add six weights to all blades. If the other blades did not require tracking corrections, three weights would be placed in the leading edge box and three weights in the trailing edge box. This would have no effect on the blade line as shown on the tracking plot, but it would maintain balance in the rotor set. However, in step b., it has been determined that the green blade requires two weights in the leading edge box. Since it is necessary to add six weights to that blade as determined in step c., place four weights in the leading edge box and two weights in the trailing edge box. This will retain the difference of two, which is necessary to correct the slope of the tracking line as determined in step b. Since a total of six weights has been added, balance in the rotor set is maintained. The results of this step are shown in table 1-1A, calculation 3.

d. It is possible that some weights may be present in the balance boxes due to previous tracking corrections. If this is the case and it has been disclosed that the weights shown in table 1-1A, calculation 4, are already present, the weights shown in table 1-1A, calculation 4, must be added to the totals arrived at in step c. The results are shown in table 1-1A, calculation 5.

e. If the weights shown in table 1-1A, calculation 3, were added to the blade balance boxes, to give the totals shown in table 1-1A, calculation 5, correct tracking would result. However, it is advisable to eliminate as many weights as possible. In order to do this, count the lowest number of weights in any leading edge box (three in the red blade and yellow blade leading edge boxes) and remove this number (three) from all the leading edge boxes. Since four is the least amount of weights required in any trailing edge box (green blade), remove four weights from all trailing edge boxes. This results in the figures shown in table 1-1A, calculation 6, which is the amount and position of weights which must be present in the blades' balance boxes to correct the out-of-track condition caused by changes in manifold pressure.

TABLE 1-1A
DETERMINING BALANCE WEIGHT CORRECTIONS

Blade	Leading Edge Box	Trailing Edge Box
CALCULATION 1		
Red	0	7
Green	3	0
Yellow (reference)	0	0
CALCULATION 2		
Red	0	6
Green	2	0
Yellow (reference)	0	0
CALCULATION 3		
Red	0	6
Green	4	2
Yellow (reference)	3	3
CALCULATION 4		
Red	3	0
Green	1	2
Yellow (reference)	0	3
CALCULATION 5		
Red	3	6
Green	5	4
Yellow (reference)	3	6
CALCULATION 6		
Red	0	2
Green	2	0
Yellow (reference)	0	2

1-62. SERVICING.

1-63. FUEL SYSTEM SERVICE.

CAUTION

Alcohol must not be added to aviation fuels for use in this aircraft, regardless of the type of fuel cells or tanks installed. Addition of approved type alco-

hol to the fuel system by means of the de-icing system for the fuel filter and engine control and the engine water injection system is acceptable, but under no circumstances should alcohol be added to the fuel system via the fuel cells.

1-64. FILLING FUEL CELL. (See figure 1-12.) The fuel cell is serviced through a filler neck (1) located behind an access door on the right side of the fuselage just forward of the main alighting gear. A fuel nozzle grounding jack (2) is located just aft of the filler neck installation and provides a means of "grounding" the helicopter against static electricity when filling the fuel cell. A drain line is provided to remove any spilled fuel from around the filler neck.

CAUTION

Do not overfill. All spilled fuel must be wiped dry before inserting the external battery plug.

Fuel grade and capacity are given in table 1-2. The fuel quantity is measured by means of an electronic capacitance type fuel quantity measuring system which is described in Section VI. If an additional means of checking fuel quantity is desired, a dipstick similar to that shown in figure 1-13A may be manufactured. The dimensions and calibrations necessary to assure accurate values are listed in the table in figure 1-13A. When using the dipstick to measure the fuel quantity, be sure that the shield on the stick bottoms firmly on the fuel filler neck for an accurate measurement.

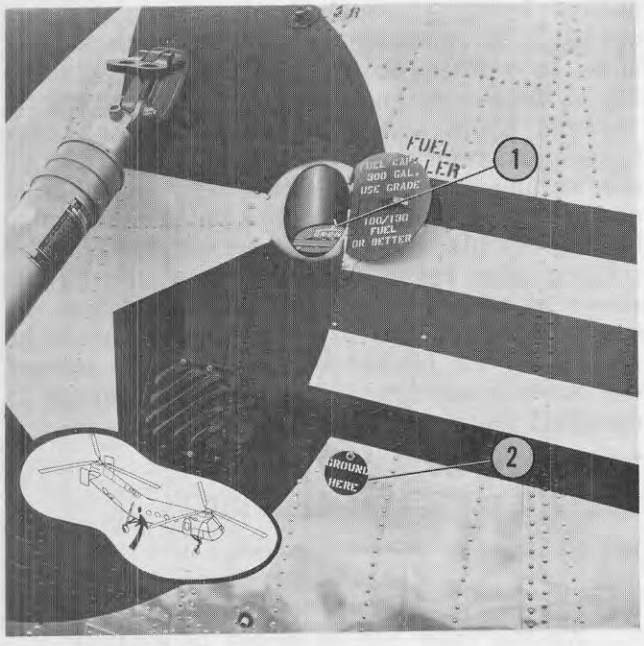

1 Fuel Scupper 2 Grounding Jack

Figure 1-12. Fuel Scupper and Grounding Jack

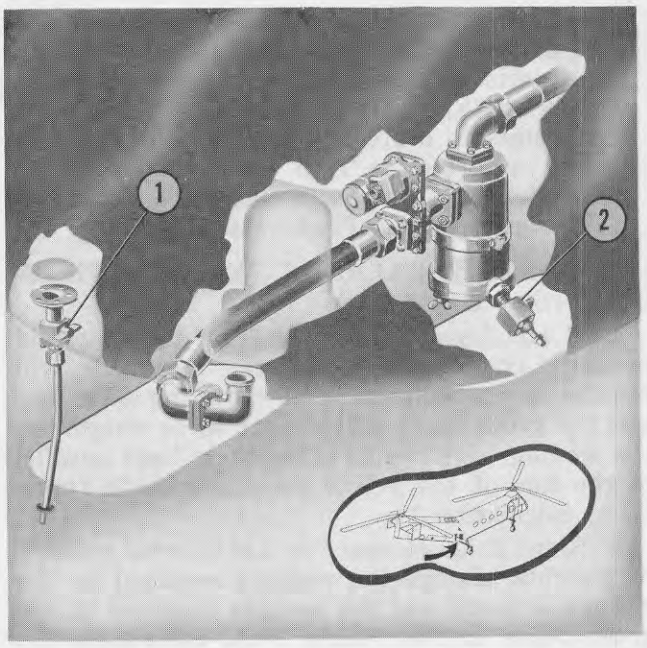

1 Tank Drain Valve 2 Strainer Drain Valve

Figure 1-13. Fuel Tank and Strainer Drains

1-65. FILLING H-21B AND H-21C AUXILIARY FUEL TANKS. When auxiliary fuel tanks are used on the H-21B and H-21C helicopters, the tanks may be filled by removing the filler cap and inserting the fuel nozzle. Be sure to ground the unit against static electricity before filling the tank.

1-66. DRAINING FUEL CELL SUMP. (See figure 1-13.) The fuel cell sump should be drained during the daily inspection to remove water and foreign matter:

a. Turn the fuel shut-off switch on the console to the OFF position.

b. Open the fuel cell drain valve (1) located on the bottom of the cell and let any accumulated water drain off until clean fuel begins to flow. Close and resafety the valve.

1-67. DRAINING FUEL STRAINER. (See figure 1-13.) The fuel strainer is equipped with a valve (2) for draining water and foreign matter at required inspection periods.

a. Turn the fuel shut-off switch on the console to the OFF position.

b. Open the strainer valve (2) until all water is drained off and clean fuel begins to flow, then close and safety wire.

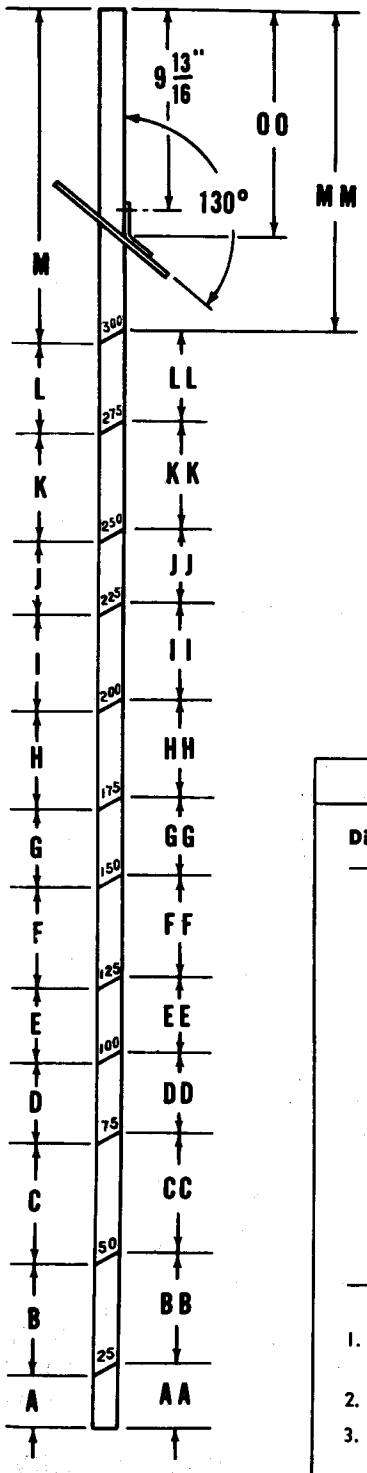

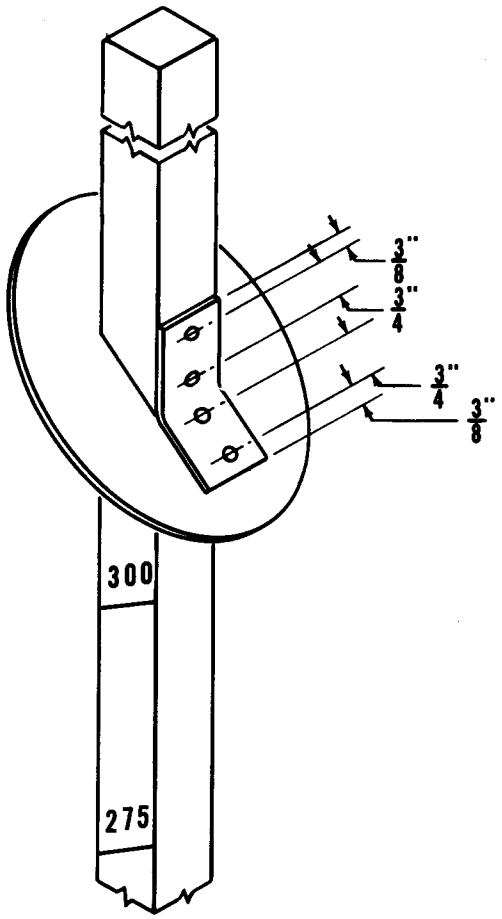

FUEL QUANTITY DIPSTICK CALIBRATIONS

Dimension	Length	Dimension	Length	Equivalent Fuel Quantity for Points	
A	2-3/16	AA	2-3/4	A-AA	25
B	4-11/16	BB	4-11/16	B-BB	50
C	5-3/32	CC	5-3/32	C-CC	75
D	3-7/16	DD	3-7/16	D-DD	100
E	3-3/16	EE	3-3/16	E-EE	125
F	4-15/16	FF	4-15/16	F-FF	150
G	3-15/16	GG	3-15/16	G-GG	175
H	4-1/8	HH	4-1/8	H-HH	200
I	4-1/16	II	4-1/16	I-II	225
J	3-13/32	JJ	3-13/32	J-JJ	250
K	4-1/2	KK	4-1/2	K-KK	275
L	3-7/8	LL	3-7/8	L-LL	300
M	14-5/16	MM	13-3/4		
		OO	10-7/8		

Notes

1. Make dipstick from wood (1 x 1 x 61-3/4 inches).
2. Make clip from 0.064 stock (1 x 3 inches).
3. Make shield from 0.032 stock (six inch diameter). Cut hole in center of shield (1 x 1-3/8 inches).
4. Bend clip as shown and rivet it to the shield.
5. Place the shield on the dipstick as shown and attach it with two wood screws.
6. When calibrating dipstick make calibration marks clearly. Stencil equivalent fuel quantity above its corresponding calibration mark.

Figure 1-13A. Fuel Quantity Dipstick

1-68. DRAINING FUEL SYSTEM. The fuel system is drained as follows:

a. Turn fuel shut-off switch on the console to the OFF position.

b. Drain fuel strainer and lines.

c. Remove fuel strainer screen.

d. Turn fuel shut-off switch ON and drain tank through strainer.

e. Drain carburetor and clean strainer.

f. On the H-21B and H-21C helicopters, drain the auxiliary fuel lines at the fuel drain valve located on the bottom of the fuselage beneath the main fuel tank.

1-69. COLD WEATHER FUEL SYSTEM SERVICING.

Note

The following fuel system servicing instructions are applicable when operating under cold weather conditions and are in addition to the previously outlined fuel system servicing instructions.

a. Exercise extreme care when servicing the fuel system to prevent the entrance of snow or ice into the system.

b. Check fuel filler caps, vent lines, and fuel tank sumps for ice and frozen condensation.

c. Check fuselage drains and ventilation holes, and remove any ice or snow.

Note

Exercise care when removing ice by the application of heat as water may run down and freeze immediately outside of the heated area.

d. Check all fuel connections for leakage. Connections that are tight during warm temperatures may leak at cold temperatures due to the contraction of metal.

1-70. ENGINE OIL SYSTEM SERVICE.

Note

When filling or adding oil to the oil tank, it is recommended that a work stand or platform approximately 40 inches high be used to gain access to the oil tank filler neck.

1-71. FILLING OIL TANK. (See figure 1-14.)

Note

The oil tank and diverter-segregator valve assembly is designed in such a manner that the level of oil in the tank will be above the filler neck opening when the system is in operation and the level in the hopper will become slightly lower. Consequently, oil will overflow when the filler neck cap or oil quantity dipstick is removed. Open the hopper filler tube to permit the oil in the filler neck to drain into the hopper.

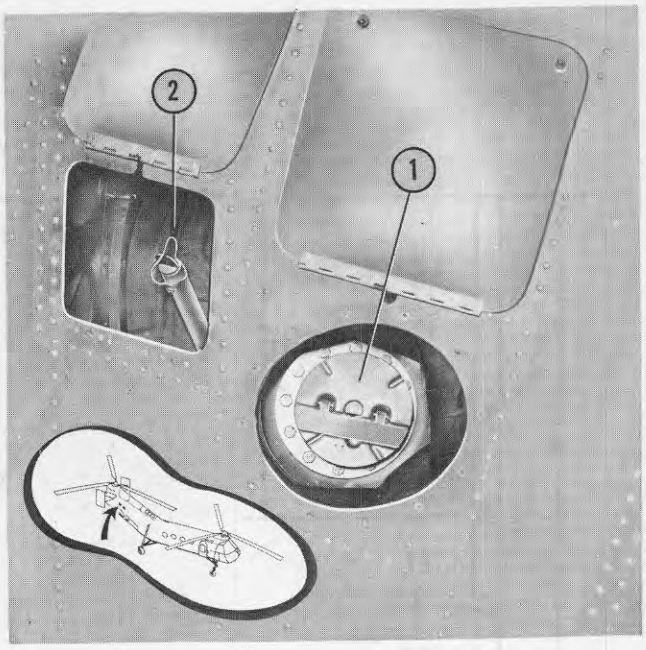

1 Filler Neck Cap 2 Dipstick

Figure 1-14. Oil Tank Filler Neck and Dipstick—YH-21, H-21A

The oil tank filler neck is located on the right side of the fuselage just aft of the engine and behind a hinged access door. An oil quantity dipstick is located behind a hinged access door to the left of the filler neck on YH-21 and H-21A helicopters. The H-21B and H-21C helicopters have the dipstick inside the filler neck of the oil tank. The hopper filler neck is located inside the oil tank filler neck. The filler neck cap on the YH-21 helicopters incorporates a plunger assembly which closes the hopper filler neck when the cap is in place. The H-21A, H-21B, and H-21C helicopters have a spring-loaded valve assembly on the filler neck of the hopper which is operated by a rod located on the side of the oil tank filler neck. Pulling up on the rod will open the valve and releasing the rod will close it. Open the hopper valve and fill the tank and hopper until the oil level stabilizes at the edge of the main tank filler neck. Close the hopper valve when oil servicing is complete.

1-71A. HALF TANK OPERATION SERVICE. The R-1820-103 engine can be operated with half a tank of oil for each 300 US gallons of fuel providing the following procedures are strictly adhered to:

CAUTION

If the oil consumption exceeds two US gallons per hour, the engine must *not* be operated with the reduced quantity of oil.

a. If the oil level on the dipstick is above the one-half mark, drain the oil from the oil tank sump drain valve (15, figure 5-31) until the oil level reaches the one-half mark.

CAUTION

Do *not* drain the oil from the Y-drain valve as this will only drain the hopper.

b. If the tank has been drained or the engine has been pre-oiled, then proceed to fill the tank and hopper. Remove the filler neck cap and on H-21A, H-21B, and H-21C helicopters, open the hopper filler neck valve. If the hopper contains diluted oil, it must be drained.

CAUTION

Whenever the oil tank is filled following an oil change or if the hopper has been drained, the engine must be pre-oiled as directed in paragraph 5-56, steps i., j., and k.

Fill the hopper and main oil tank until the oil level stabilizes at the edge of the main tank filler neck. Drain the oil from the oil tank sump drain valve (15, figure 5-31) until the oil level reaches the one-half mark.

CAUTION

Do *not* drain the oil from the Y-drain as this will only drain the hopper.

c. The helicopter can be operated thereafter on the reduced quantity of oil by servicing the oil tank to the one-half mark without servicing the hopper even if the oil has been diluted.

Note

Only the oil in the hopper is affected when diluted.

d. For extended operations, the oil tank and hopper should be completely filled.

1-71B. PERIODIC OIL DILUTION.

a. The use of periodic oil dilution will be at the discretion of the Engineering Officer. If it is determined that periodic oil dilution will be accomplished, Procedure "A" or "B" outlined below will be followed.

b. The purpose of periodic oil dilution is to retard the formation of hard sludge deposits in the engine. However, periodic oil dilution procedures shall only be initiated on engines with less than 100 hours operating time since new or overhauled. The periodic oil dilution may be accomplished by utilizing either of the following procedures:

1. Perform Procedure "A" at the periodic inspection intervals.
   (a) Operate the engine in as low an outside temperature as possible.
   (b) Idle the engine between 1000 and 1200 rpm or shut down until cylinder head temperature has dropped to 150°C and oil temperature is between 30 and 50°C.

Note

Oil temperature above 50°C will cause partial evaporation of the fuel and give improper dilution.

   (c) With the engine still idling and the fuel booster pump switch in the ON or HIGH position, hold the oil dilution switch ON to dilute the oil 10 per cent (approximately 1 minute).
   (d) Operate supercharger clutch through one cycle.

Note

This complete operation shall be for a minimum of 10 minutes with oil temperature not in excess of 50°C.

   (e) Upon shutdown of the engine at the completion of the above operation, remove, inspect, and clean the magnetic sump lugs, sump strainers, and oil screen.
   (f) If during the above screen examination excessive deposits are noted, run the engine an additional 10 minutes and re-examine the screen. This procedure will be repeated until the screen is substantially free of deposits.
   (g) Drain and reservice oil tanks.
2. Perform Procedure "B" (alternate procedure) prior to each flight.
   (a) Dilute oil as outlined in step 1. (a), (b), and (c). This procedure should be accomplished after engine starting prior to each flight or while taxiing.

Note

This procedure will not be accomplished in cold weather operation when oil has been diluted prior to engine shutdown.

   (b) Upon completion of the oil dilution as specified in step 1. (a), (b), and (c) and prior to take-off or high power operation, operate the engine a minimum of 10 minutes at an oil temperature above 50°C.

1-72. CLEANING OIL PUMP FILTER. (See figure 1-15.) The oil pump filter is located in the oil pump housing which is mounted on the accessory section of the engine below the left magneto. The filter is held in place by three nuts and may be removed for inspection and cleaning.

1-73. DRAINING ENGINE SUMP. (See figure 1-16.) An oil strainer with a magnetic plug installed is threaded into the bottom of the engine oil sump located between the lowest two cylinders (No. 5 and 6). A similar plug and screen are located on the lower side of the accessory case of the engine. Drain the sump by removing the plugs and screens. The engine sump may be drained without draining the entire system.

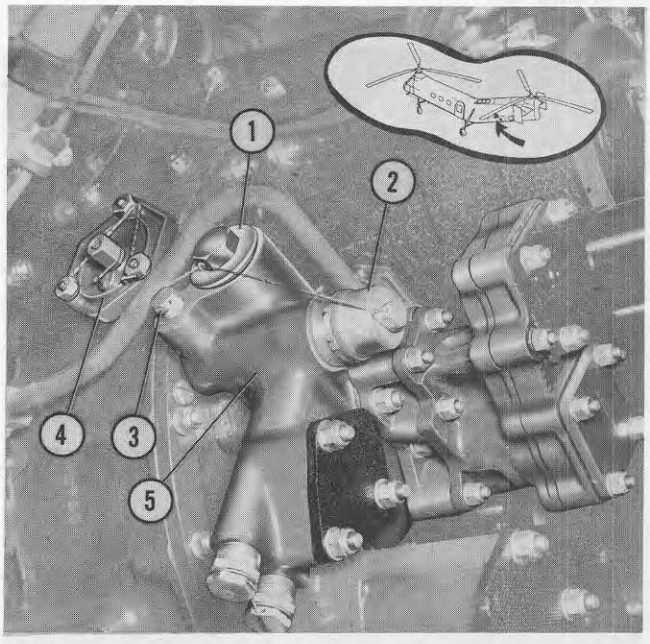

1 Check Valve
2 Pressure Regulator Valve
3 Bleed Valve Pre-Oiling Connection
4 Oil Pump Filter Screen
5 Oil Pump

Figure 1-15. Engine Oil Pump and Filter Screen

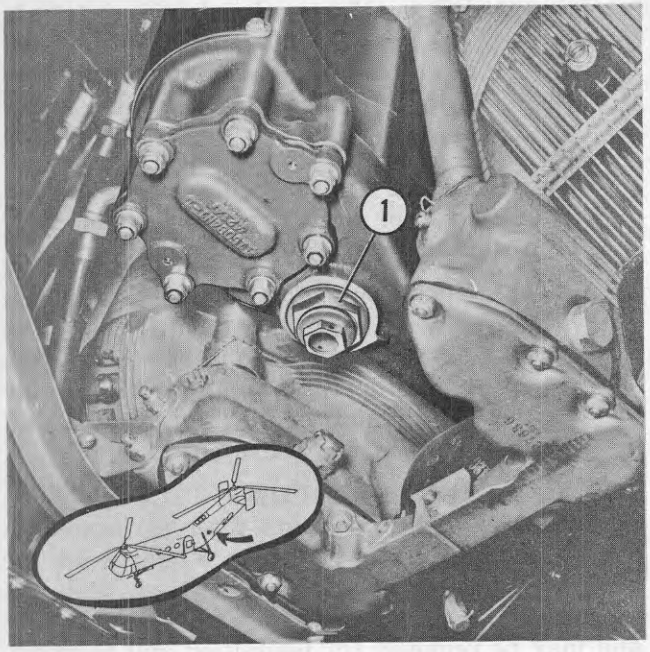

1 Magnetic Drain Plug

Figure 1-16. Engine Sump Drain Plug

CAUTION

Whenever the engine sump plugs are removed, the engine must be pre-oiled as directed in paragraph 5-56, steps i., j., and k.

1-74. DRAINING OIL SYSTEM. (See figure 1-17.) To completely drain the oil system, the following procedure must be used:

a. Drain the oil tank by opening the drain valve (15, figure 5-31) on the oil tank sump.

b. Drain the oil tank hopper by opening the Y-drain valve (accessible from the engine air exit openings).

c. Drain the oil cooler by removing the drain plug on the bottom of the cooler.

d. Drain the engine sump by removing the magnetic drain plugs (1, figure 1-16).

CAUTION

Whenever the engine lubrication system is drained, the engine must be pre-oiled. See Pre-Oiling, Section V, for proper pre-oiling procedure.

1-74A. COLD WEATHER ENGINE OIL SYSTEM SERVICING.

Note

The following oil system servicing instructions are applicable when operating under cold weather conditions and are in addition to the previously outlined oil system servicing instructions.

a. Exercise extreme care when servicing the oil system to prevent the entrance of snow or ice into the system.

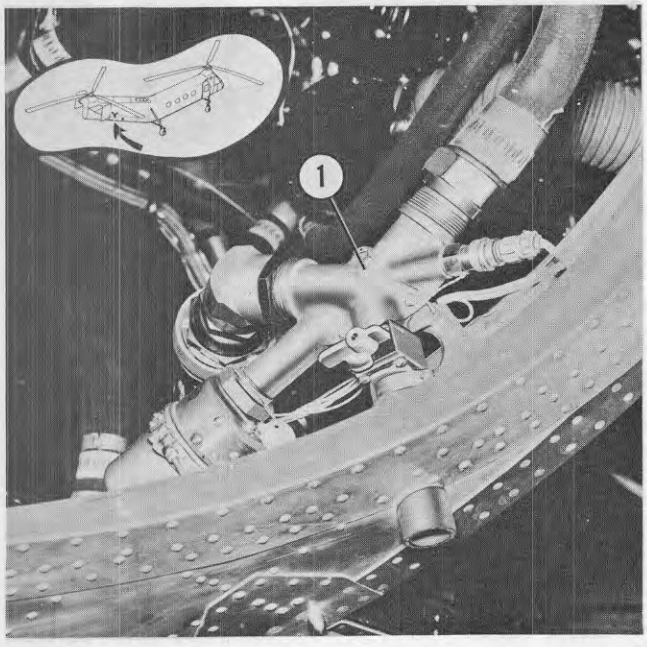

1 Y-Drain

Figure 1-17. Y-Drain

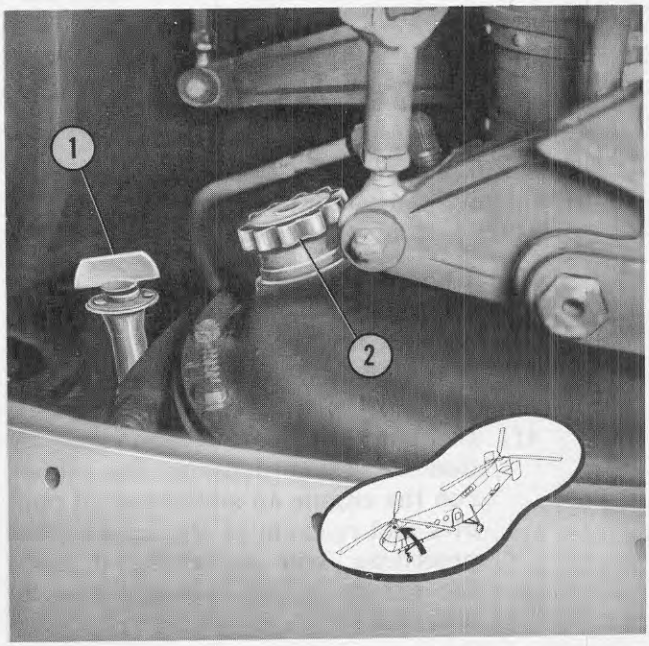

1 Dipstick 2 Filler Neck Cap

Figure 1-18. Rotor Transmission Servicing

1 Drain Valve
2 Magnetic Plug

Figure 1-19. Rotor Transmission Drain Valve

b. Check the oil tank sump drain and the Y-drain for ice and frozen condensation.

c. Check the crankcase breathers, and remove any frost or ice.

d. Check all oil connections for leakage. Connections that are tight during warm temperatures may leak at cold temperatures due to the contraction of metal.

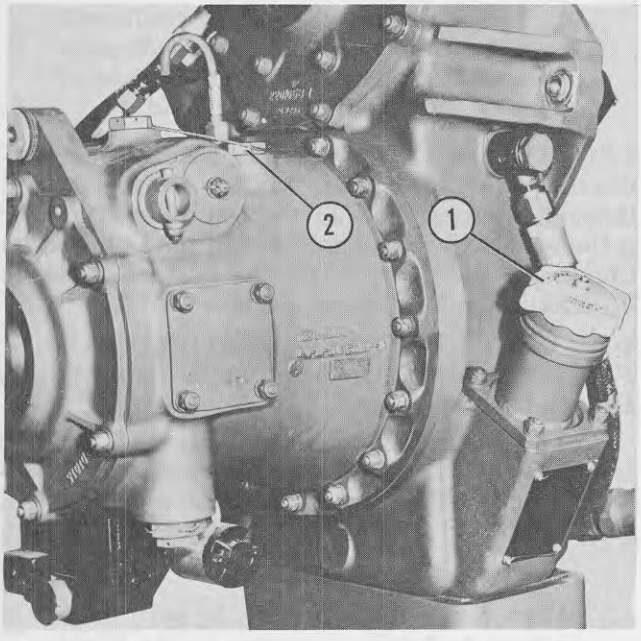

1 Transmission Filler Neck
2 Clutch Filler Plug

Figure 1-19A. Central Transmission Servicing

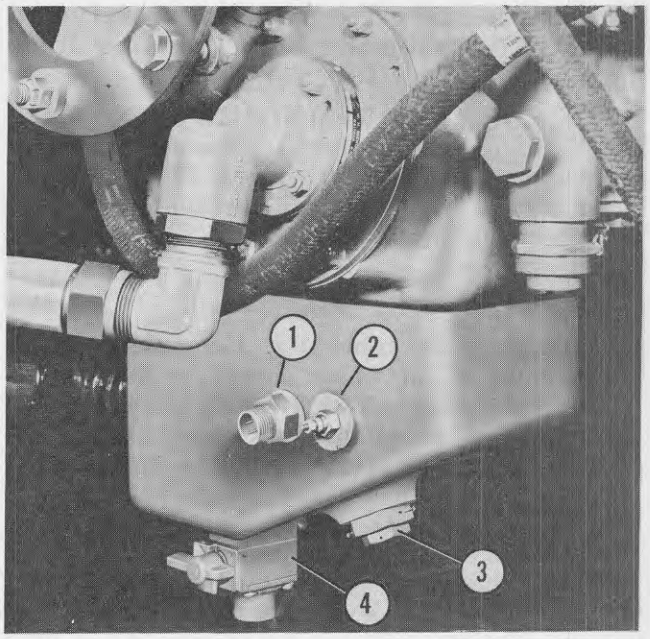

1 Temperature Bulb
2 Temperature Warning Switch
3 Magnetic Plug
4 Drain Valve

Figure 1-20. Central Transmission External Sump

1-75. TRANSMISSION AND HUB SERVICE.

1-76. FORWARD TRANSMISSION. (See figure 1-18.) The forward transmission is accessible through the access door provided in the forward transmission cowling. A filler cap (2) and oil level dipstick (1) are located on the forward side of the case. Fill to a point between the high and low marks on the stick gage.

CAUTION

As given in table 1-2, the minimum amount of oil that should be poured into the case is 27 US (23 Imperial) pints, which include the capacities of the cooler and connecting lines. This is particularly important when refilling the transmission after draining, since there is a danger of air pockets causing a false indication of the quantity in the unit. Check oil level after first flight.

Check the oil level after a new transmission has been run-in to see that it has not dropped below the lower mark on the dipstick. A drain valve, located in the sump, is opened to drain the transmission (see figure 1-19). Consult the Lubrication Chart for correct lubricants.

1-77. AFT TRANSMISSION. Servicing of the aft transmission is identical to that of the for-

ward transmission. The minimum amount of oil which should be poured into the case after draining is 23 US (19.67 Imperial) pints.

1-78. CENTRAL TRANSMISSION AND CLUTCH. (See figure 1-20.) The central transmission is serviced through a filler tube located on the right side of the unit. Fill to a point between the ADD OIL and FULL marks on the stick gage.

Note

As given in table 1-2, the minimum amount of oil which should be poured into the sump is 13 US (10.83 Imperial) pints which includes the capacities of the cooler and connecting lines. This is particularly important when refilling the transmission after draining, since there is danger of air pockets causing a false indication of the quantity in the unit. Check oil level after first flight.

Check the oil level after a new transmission has been run-in to see that it has not dropped below the ADD OIL mark on the dipstick. A drain valve (1), located in the removable sump, is opened to drain the transmission. The clutch is filled to a capacity of one US (0.75 Imperial) quart. Consult the Lubrication Chart for correct lubricants.

1-79. ROTOR BLADE PITCH BEARING HOUSINGS. (See figure 1-21.) The rotor blade pitch bearing housings contain two small plugs located 180 degrees apart. The housings have a capacity of nine cubic inches. Fill them completely, allowing sufficient time for the oil to seep through the inner pitch bearing and fill the case. After the case is filled, drain off one cubic inch to allow for expansion. Refer to Lubrication Chart for type and grade of oil to use.

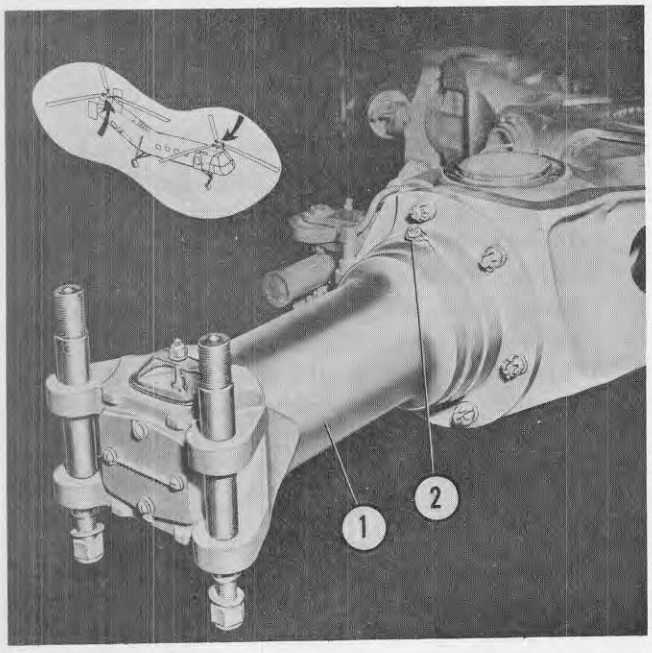

1 Pitch Bearing Housing 2 Filler Plug

Figure 1-21. Pitch Bearing Housing

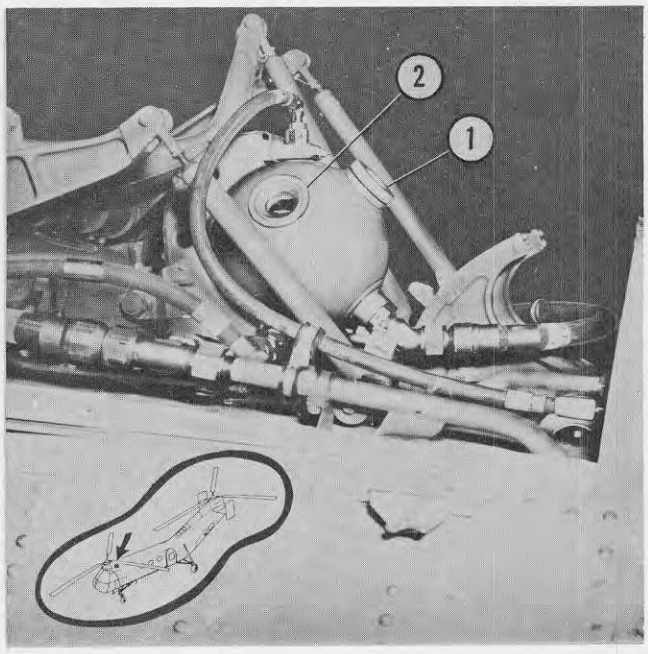

1 Filler Cap 2 Sight Glass

Figure 1-22. Hydraulic Reservoir Servicing

1-80. HYDRAULIC SYSTEMS SERVICE.

Note

All hydraulic fluid dispensing equipment must contain micronic filters. Replace filters at regular intervals to assure delivery of uncontaminated fluid.

1-81. HYDRAULIC BRAKE SYSTEM. Hydraulic fluid for wheel brakes is replenished through the plug hole in the top of each master cylinder. Use the fluid specified in the Lubrication Chart. To bleed air from the system, refer to Hydraulic Brake System, Section III.

1-82. RESCUE HOIST AND HYDRAULIC FLIGHT CONTROL SYSTEMS. (See figures 1-22 and 1-23.)

a. The hydraulic fluid for these two systems is replenished through the filler cap in the reservoir (figure 1-22). Fill to the center of the sight glass with fluid specified in the Lubrication Chart.

Note

When filling the reservoir, be sure there is zero hydraulic pressure in the flight control system. With hydraulic pressure in the system, there will be a certain amount of fluid in the accumulator which

TABLE 1-2
FLUID CAPACITIES

System	Fluid Specification	Grade	Units	Unit Capacity		System Capacity	
				US	Imperial	US	Imperial
FUEL	MIL-F-5572	*100/130	Gal	300	250	—	—
AUXILIARY FUEL—2—H-21B & H-21C	MIL-F-5572	*100/130	Gal	330	275	—	—
EXTERNAL FUEL—2—H-21C	MIL-F-5572	*100/130	Gal	250	208.17	—	—
ENGINE OIL—YH-21 & H-21A	**	**	Gal	***21.47	***17.89	—	—
ENGINE OIL—H-21B & H-21C	**	**	Gal	***21.47	***17.89	—	—
FORWARD TRANSMISSION	**	**	Pt	17	14.67	27	23
CENTRAL TRANSMISSION	**	**	Pt	10	8.33	13	10.83
AFT TRANSMISSION	**	**	Pt	17	14.67	23	19.67
PITCH BEARINGS	**	**	Pt	0.50	0.50	—	—
HYDRAULIC RESERVOIR	**	**	Pt	6.06	5.04	15.25	12.70

*In emergency, grade 115/145 may be used. **See Climatic Lubrication Table. ***Includes hopper capacity of 4 US (3.33 Imperial) gallons.

will return to the reservoir and raise the fluid level as the pressure is relieved. Precautions must also be taken against snow or water entering the reservoir when servicing.

b. The accumulator (figure 1-23) operates with 300 psi air pressure. The actual accumulator air pressure is indicated on a gage mounted with the accumulator under the cockpit floor. If accumulator air pressure is low, apply a compressed air line to the air valve as directed in paragraph 1-84B in this section. Fill the accumulator until the pressure gage reads 300 psi.

Note

Hydraulic system pressure must be zero when checking the air pressure. System pressure may be relieved by turning the hydraulic flight control valve ON and operating the controls a few times.

c. The gear case of the rescue hoist is filled with the oil specified in the Lubrication Chart. To fill, remove the plug from the side of the case and add oil until it runs out the plug hole.

d. The reservoir return line micronic filter is located to the left of and slightly below the reservoir (figure 1-22). The filter element is changed periodically.

e. The flight control system filter is located under the cockpit floor and is accessible from the accumulator access opening (figure 1-23).

f. The reservoir vent system filter is located on the left side of the fuselage at the first bulkhead aft of the canted bulkhead.

1-82A. COLD WEATHER HYDRAULIC SYSTEM SERVICE.

Note

The following hydraulic system servicing procedures are applicable when the helicopter is being operated under cold weather conditions and are in addition to the previously outlined hydraulic system servicing procedures.

a. Check the entire hydraulic system for leakage. Fittings that are tight during warm temperatures may leak at cold temperatures due to the contraction of metal.

b. Check the accumulator and shock struts for correct pressures and signs of leakage.

1-83. SHOCK STRUT SERVICE.

1-83A. GENERAL. The shock struts used on YH-21 helicopters are different from those used on H-21A, H-21B, and H-21C helicopters; therefore, separate servicing instructions for each type of strut are necessary. To preclude the possibility of trapped air forming in the shock strut and as a safeguard against ground resonance tendencies, it is mandatory that the initial servicing instructions be followed exactly.

Note

The shock struts may be serviced either before installation or while installed on the helicopter. For best results, it is recommended that they be serviced before installation.

1-84. SERVICING BEFORE OR AFTER INSTALLATION — YH-21. The procedure described in the following paragraphs should be used when servicing the alighting gear shock struts. The shock struts may be serviced either before or after installation on the helicopter.

a. Main Gear Strut. Service the main gear strut as follows:

1. Release air pressure from the strut as directed in paragraph 1-84B and remove the air valve.
2. Fully compress the strut.
3. Slowly remove the bleeder plug. If fluid runs out, retighten the plug as the outer hydraulic chamber is full. If no fluid runs out, add hydraulic fluid, Spec MIL-O-5606, until the chamber is filled. Retighten the bleeder plug.
4. Add hydraulic fluid, Spec MIL-O-5606, to the air valve filler port until the fluid overflows.

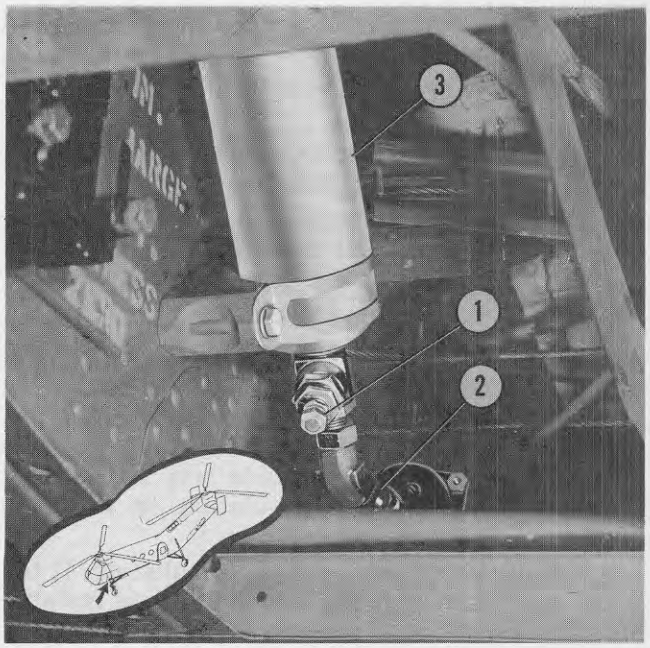

1 Accumulator Air Valve
2 Accumulator Air Pressure Gage
3 Accumulator

Figure 1-23. Accumulator Servicing

5. Operate the piston through its cycle several times. Add more hydraulic fluid if necessary.
6. Replace the air valve and tighten it as directed in paragraph 1-84B.
7. With the helicopter load on the strut, the bottom edge of red tape should be even with the top of the gland packing nut. If the red tape is missing or requires replacing, install a 1/8-inch-wide tape so that the top edge of the tape measures 3-29/32 inches from the center of the bolt attaching the strut to the upper universal assembly. Inflate the strut to the extension specified on the name plate.
8. Replace the air valve cap.

b. Nose Gear Strut. Service the nose gear strut as follows:

1. Release air pressure and remove the air valve as directed in paragraph 1-84B.
2. Fully compress the strut.
3. With the strut in a vertical position, add hydraulic fluid, Spec MIL-O-5606, to the air valve filler port until the fluid overflows.
4. Replace the air valve as directed in paragraph 1-84B and inflate the strut until it is fully extended.
5. Release the air pressure and again remove the valve as directed in paragraph 1-84B.
6. Fully compress the strut.

7. With the strut in a vertical position, add hydraulic fluid, Spec MIL-O-5606, to the air valve filler port until the fluid overflows.
8. Replace the air valve and tighten as directed in paragraph 1-84B.
9. With the helicopter load on the strut, inflate the strut to the extension specified on the name plate.
10. Replace the air valve cap.

1-84A. SERVICING BEFORE OR AFTER INSTALLATION — H-21A, H-21B, H-21C. The procedure described in the following paragraphs should be used when servicing the alighting gear shock struts. The shock struts may be serviced either before or after installation on the helicopter.

a. Main Gear Strut—Before Installation. If the main gear strut is being serviced before installation, the following procedure should be used:

1. Completely expel the air from the strut as directed in paragraph 1-84B. Compress the strut and place it in the normal position of installation. Remove the filler plug.
2. Fill the strut to the level of the filler plug hole and replace the plug.
3. Move the piston through three full strokes.
4. With the strut fully compressed, remove the filler plug and repeat steps 2 and 3 until the fluid level remains constant.

Note

Keep the shock strut in an upright position until installed. After installation, inflate the strut (as directed in paragraph 1-84B) to the proper length as shown on the name plate.

b. Main Gear Strut—After Installation. If the main gear strut is being serviced after installation, the following procedure should be used:

1. With the shock strut fully compressed, release all air as directed in paragraph 1-84B.
2. Remove the filler plug and fill the strut until the fluid is level with the filler plug hole.
3. Insert the plug loosely and rock the helicopter so that the shock strut is completely compressed and extended three times. Remove the plug and add fluid as required to bring the level up to the filler plug hole. Repeat this procedure until the fluid level remains constant.
4. Tighten the filler plug and check to see if the bottom edge of the red tape is even with top of the gland packing nut. If the red tape is missing or requires replacing, install a 1/4-inch-wide tape so that the top edge of the tape measures 6-11/16 inches from the center of the bolt attaching the strut to the upper universal assembly. Inflate the strut (as directed in paragraph 1-84B) to the proper extension as shown on the name plate.

c. Nose Gear Strut—Before Installation. If the nose gear strut is being serviced before installation, the following procedure should be used:

1. With the strut in an upright position and fully extended, remove the filler plug and fill to the level of the filler plug hole.
2. Raise the piston approximately one-half stroke and allow it to return slowly to the fully extended position. Fluid will be forced from the filler plug hole as the piston is raised. Catch this fluid in a clean container for future use.
3. Raise the piston end slowly until the strut is fully compressed. The fluid level must be even with the filler plug hole. Insert and tighten the filler plug.
4. Install the shock strut on the helicopter and jack the forward part of the fuselage enough to allow the gear to extend approximately two inches from the fully compressed position. Loosen the filler plug if necessary to obtain the two inch extension.
5. Inflate the strut (as directed in paragraph 1-84B) to the dimension noted on the name plate.

d. Nose Gear Strut—After Installation. If the nose gear strut is being serviced after installation, the following procedure should be used:

1. Jack the forward end of the helicopter high enough to allow the gear to extend completely. Release all air (as directed in paragraph 1-84B), remove the filler plug, and fill the strut to the level of the filler plug hole.
2. Raise the piston approximately one-half stroke and allow it to return slowly to the fully extended position. Fluid will be forced from the filler plug hole as the piston is raised. Catch this fluid in a clean container for future use.
3. Raise the piston slowly to the fully compressed position. Fluid level must be even with the filler plug hole. Insert the plug loosely and allow the gear to return slowly to the fully extended position.
4. Tighten the filler plug and lower the jack until the helicopter is supported by the gear.

COLD WEATHER SHOCK STRUT EXTENSION
(IN EXCESS OF NORMAL EXTENSION)

YH-21

MAIN ALIGHTING GEAR

Anticipated Landing Temperature

°C	°F	Temperature at Inflation										
40	104	2.369	2.276	2.024	1.772	1.520	1.270	1.018	0.756	0.504	0.252	0
30	86	2.117	2.024	1.772	1.520	1.270	1.018	0.756	0.504	0.252	0	0.252
20	68	1.865	1.772	1.520	1.270	1.018	0.756	0.504	0.252	0	0.252	0.504
10	50	1.613	1.520	1.270	1.018	0.756	0.504	0.252	0	0.252	0.504	0.756
0	32	1.361	1.270	1.018	0.756	0.504	0.252	0	0.252	0.504	0.756	1.018
—10	14	1.109	1.018	0.756	0.504	0.252	0	0.252	0.504	0.756	1.018	1.270
—20	—4	0.857	0.756	0.504	0.252	0	0.252	0.504	0.756	1.018	1.270	1.520
—30	—22	0.625	0.504	0.252	0	0.252	0.504	0.756	1.018	1.270	1.520	1.772
—40	—40	0.353	0.252	0	0.252	0.504	0.756	1.018	1.270	1.520	1.772	2.024
—50	—58	0.101	0	0.252	0.504	0.756	1.018	1.270	1.520	1.772	2.024	2.276
—54	—65	0	0.101	0.353	0.605	0.857	1.109	1.361	1.613	1.865	2.117	2.369
	°F	—65	—58	—40	—22	—4	14	32	50	68	86	104
°C		—54	—50	—40	—30	—20	—10	0	10	20	30	40

NOSE ALIGHTING GEAR

Anticipated Landing Temperature

°C	°F	Temperature at Inflation										
40	104	2.671	2.529	2.248	1.967	1.687	1.405	1.124	0.843	0.562	0.281	0
30	86	2.390	2.248	1.967	1.687	1.405	1.124	0.843	0.562	0.281	0	0.281
20	68	2.079	1.967	1.687	1.405	1.124	0.843	0.562	0.281	0	0.281	0.562
10	50	1.798	1.687	1.405	1.124	0.843	0.562	0.281	0	0.281	0.562	0.843
0	32	1.517	1.405	1.124	0.843	0.562	0.281	0	0.281	0.562	0.843	1.124
—10	14	1.236	1.124	0.843	0.562	0.281	0	0.281	0.562	0.843	1.124	1.405
—20	—4	0.955	0.843	0.562	0.281	0	0.281	0.562	0.843	1.124	1.405	1.687
—30	—22	0.674	0.562	0.281	0	0.281	0.562	0.843	1.124	1.405	1.687	1.967
—40	—40	0.393	0.281	0	0.281	0.562	0.843	1.124	1.405	1.687	1.967	2.248
—50	—58	0.112	0	0.281	0.562	0.843	1.124	1.405	1.687	1.967	2.248	2.529
—54	—65	0	0.112	0.393	0.674	0.955	1.236	1.517	1.798	2.079	2.390	2.671
	°F	—65	—58	—40	—22	—4	14	32	50	68	86	104
°C		—54	—50	—40	—30	—20	—10	0	10	20	30	40

DEFLATE IF FAE

Figure 1-24. Cold Weather Shock Strut Inflation—YH-21

COLD WEATHER SHOCK STRUT EXTENSION
(IN EXCESS OF NORMAL EXTENSION)

H-21A, H-21B & H-21C

MAIN ALIGHTING GEAR

Anticipated Landing Temperature °C	°F	Temperature at Inflation °F										
		−65	−58	−40	−22	−4	14	32	50	68	86	104
		−54	−50	−40	−30	−20	−10	0	10	20	30	40
40	104	0.615	0.580	0.514	0.449	0.383	0.318	0.253	0.188	0.121	0.065	0
30	86	0.549	0.514	0.449	0.383	0.318	0.253	0.188	0.121	0.065	0	0.065
20	68	0.484	0.449	0.383	0.318	0.253	0.188	0.121	0.065	0	0.065	0.121
10	50	0.418	0.383	0.318	0.253	0.188	0.121	0.065	0	0.065	0.121	0.188
0	32	0.353	0.318	0.253	0.188	0.121	0.065	0	0.065	0.121	0.188	0.253
−10	14	0.288	0.253	0.188	0.121	0.065	0	0.065	0.121	0.188	0.253	0.318
−20	−4	0.222	0.188	0.121	0.065	0	0.065	0.121	0.188	0.253	0.318	0.383
−30	−22	0.157	0.121	0.065	0	0.065	0.121	0.188	0.253	0.318	0.383	0.449
−40	−40	0.092	0.065	0	0.065	0.121	0.188	0.253	0.318	0.383	0.449	0.514
−50	−58	0.026	0	0.065	0.121	0.188	0.253	0.318	0.383	0.449	0.514	0.580
−54	−65	0	0.026	0.092	0.157	0.222	0.288	0.353	0.418	0.484	0.549	0.615

DEFACE INFACE

NOSE ALIGHTING GEAR

Anticipated Landing Temperature °C	°F	Temperature at Inflation °F										
		−65	−58	−40	−22	−4	14	32	50	68	86	104
		−54	−50	−40	−30	−20	−10	0	10	20	30	40
40	104	1.504	1.144	1.128	0.112	0.960	0.800	0.640	0.480	0.320	0.160	0
30	86	1.344	1.128	1.112	0.960	0.800	0.640	0.480	0.320	0.160	0	0.160
20	68	1.184	1.112	0.960	0.800	0.640	0.480	0.320	0.160	0	0.160	0.320
10	50	1.024	0.960	0.800	0.640	0.480	0.320	0.160	0	0.160	0.320	0.480
0	32	0.864	0.800	0.640	0.480	0.320	0.160	0	0.160	0.320	0.480	0.640
−10	14	0.704	0.640	0.480	0.320	0.160	0	0.160	0.320	0.480	0.640	0.800
−20	−4	0.544	0.480	0.320	0.160	0	0.160	0.320	0.480	0.640	0.800	0.960
−30	−22	0.384	0.320	0.160	0	0.160	0.320	0.480	0.640	0.800	0.960	1.112
−40	−40	0.224	0.160	0	0.160	0.320	0.480	0.640	0.800	0.960	1.112	1.128
−50	−58	0.064	0	0.160	0.320	0.480	0.640	0.800	0.960	1.112	1.128	1.144
−54	−65	0	0.064	0.224	0.384	0.544	0.704	0.864	1.024	1.184	1.344	1.504

DEFACE INFACE

Figure 1-24. Cold Weather Shock Strut Inflation—H-21A, H-21B, H-21C

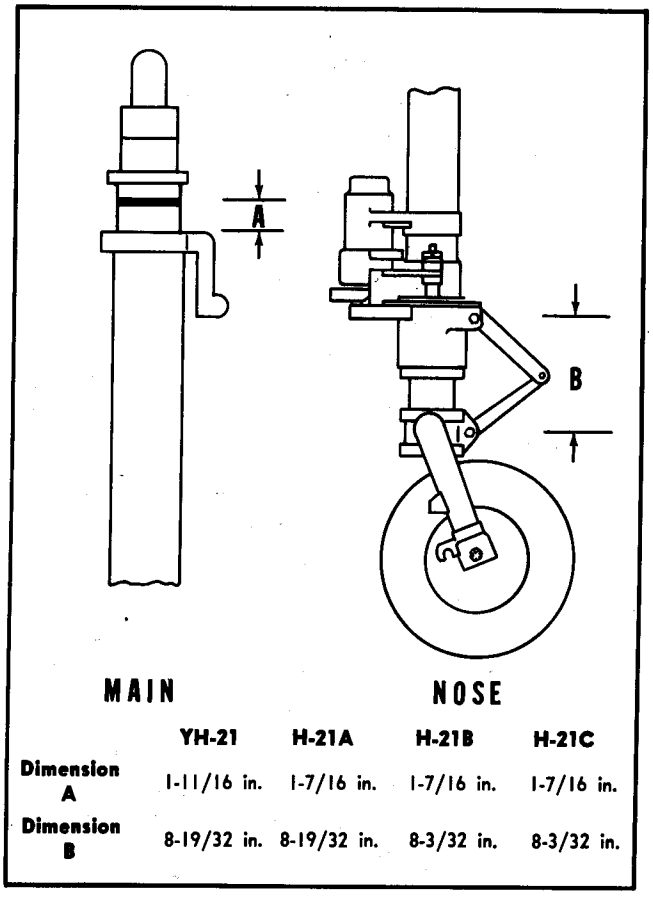

	YH-21	H-21A	H-21B	H-21C
Dimension A	1-11/16 in.	1-7/16 in.	1-7/16 in.	1-7/16 in.
Dimension B	8-19/32 in.	8-19/32 in.	8-3/32 in.	8-3/32 in.

Figure 1-25. Shock Strut Extension Table

5. Inflate the strut (as directed in paragraph 1-84B) to the dimension noted on the name plate.

Note

Prior to flight, adjust the shock strut extension to the correct dimension.

1-84B. SERVICING TYPE AN6287-1 HIGH PRESSURE AIR VALVES.

1-84C. GENERAL. The following instructions apply to all uses of the AN6287-1 air valve. This valve is used in the alighting gear shock struts, the accumulator of the hydraulic flight controls and the mechanical riggers of the flotation gear used on YH-21 and H-21A helicopters. The procedures described below must be followed when replenishing or discharging the air in the units equipped with these valves and when replacing such valves.

Note

When loosening the 5/8 hex nut in any of the following procedures, the 3/4 hex valve stem assembly, if not lockwired to the unit, shall be held securely with a wrench.

a. To discharge *total air* or to remove the AN6287-1 air valve assembly from the unit in which it is installed:

1. Remove the valve cap.
2. With a wrench, check that the 5/8 hex swivel nut is securely tightened (turn clockwise).

WARNING

When the 5/8 hex nut is loose, the positive valve seat at the bottom of the valve is open, subjecting the valve core to pressure. Under such a condition, the valve core can be blown out when being removed, causing serious damage.

3. Check for air pressure by depressing the valve core with Schrader Tool No. 3263. *Do not use a match stick type tool.* If *no* air pressure is present, the valve core should be removed from the stem with the same tool.
4. Back off the 5/8 hex swivel nut and allow the air to exhaust itself. The amount the 5/8 hex swivel nut is loosened, up to 1-1/2 turns, will govern the rate of discharge of air. Excessive loosening will result in the valve core housing dropping into the unit to which the valve is attached.

WARNING

Do not loosen the valve stem assembly (3/4 hex) while the unit is charged with air pressure. This could result in the valve body flying out, causing injury to personnel.

5. Remove the AN6287-1 air valve assembly by turning the 3/4 hex valve stem assembly counterclockwise.

b. To discharge small amounts of air or check for air pressure:

1. Remove the valve cap.
2. Loosen the 5/8 hex swivel nut to a maximum of 1-1/2 turns (to loosen, turn counterclockwise.)
3. Depress the valve core with a Schrader Tool No. 3263. *Do not use a match stick type tool* or stand in line with the valve body as the valve core may blow out, causing serious injury.
4. Tighten the 5/8 hex swivel nut to 50–70 pound-inches torque. Turn (clockwise) to tighten.

c. To charge the unit with air:

1. Remove the valve cap and attach an air filling chuck to the valve core housing.
2. Loosen the 5/8 hex swivel nut a maximum of 1-1/2 turns (to loosen, turn counterclockwise). Excessive loosening will result in the valve core housing dropping into the unit to which the valve is attached.
3. Charge to the proper air pressure as specified in the applicable service instructions for the unit involved.
4. Tighten the 5/8 hex swivel nut to 50–70 pound-inches torque (turn clockwise to tighten).
5. Remove the air filling chuck from the valve and replace and tighten valve cap to extreme finger tightness.

d. To install:

1. Lubricate a new O-ring, AF Part No. 47A1562, with hydraulic oil, Spec MIL-O-5606, prior to installation in boss. *Never install a previously used O-ring.*
2. Install the air valve in the boss, bottom the 3/4 hex valve stem assembly against the top surface of the boss and tighten to 100–110 pound-inches torque. The 3/4 hex valve stem assembly should remain tight against the boss at all times, never loosen to discharge air pressure.

Note

The air valve shall not be used in any boss having a diameter of less than 13/16 inch. Top surfaces of the boss, with or without serrations, *must* be clean, free of nicks and scratches, and square with the 1/2-20 thread centerline.

3. Lockwire the air valve assembly to its unit, using the holes provided in the 3/4 hex valve stem assembly.
4. Use a complete assembly. Do not interchange parts.
5. After a large temperature drop is encountered, some leakage of the O-ring seal may occur due to contraction of the material; therefore, it may be necessary to tighten the valve stem assembly or replace the O-ring seal rather than the valve core. For replacement of the O-ring, follow the steps outlined in procedure a.

1-84D. ALIGHTING GEAR SHOCK STRUT INFLATION. (See figures 1-24 and 1-25.)

CAUTION

Struts must be checked for correct height after loading the helicopter with cargo, and care must be taken to prevent abrupt extension of the nose strut when cargo is unloaded.

The volume of air in the shock strut is directly affected by changes in the outside air temperature. Any change in the volume of air in the shock strut will change the extension of the piston. Such changes in extension alter the energy absorbing characteristics of the alighting gear, resulting in a condition which can cause serious damage to the alighting gear and to the helicopter should a hard landing be made. Whenever the helicopter is to be operated under conditions where the landing temperature differs greatly from the temperature at time of inflation of the shock strut, the shock strut should be over-inflated or deflated as necessary to compensate for the change in air volume resulting from the temperature change. The tables in figure 1-24 are provided to aid maintenance personnel in determining the correct amount of over-inflation or deflation required when the helicopter is to operate in regions of extreme temperature changes. All changes in shock strut extension must be made with the shock strut inflated to the normal length as listed in the table in figure 1-25.

1-84E. SAMPLE PROBLEM. A flight is to be made by an H-21A helicopter to an area where the temperature will be approximately 0°C (32°F). The temperature at the point of take-off is approximately 20°C (68°F). To find the amount of over-inflation necessary to compensate for the decrease in volume due to the temperature change, read along the bottom of the graph (Temperature at Inflation) until the take-off temperature is found. Next, follow the column upward until opposite the value for the anticipated landing temperature. The number listed (0.121 in.) is the amount of over-inflation which must be added to the normal shock strut extension. When the anticipated landing temperature is higher than the temperature at inflation, the shock strut should be deflated as shown in the tables to compensate for any increase in volume caused by the increase in temperature.

1-85. TIRES. Tires used on the H-21 series helicopters are as listed below:

Model	Location	Tire Size	Pressure (psi)
YH-21	Main Gear	24 x 7.7, 6 ply	100
	Nose Gear	6.50 x 10, 6 ply	65
H-21A	Main Gear	24 x 7.7, 10 ply	100
	Nose Gear	6.50 x 10, 6 ply	65

H-21B	Main Gear	24 x 7.7, 10 ply	115
	Nose Gear	7.50 x 10, 6 ply	60
H-21C	Main Gear	24 x 7.7, 10 ply	115
	Nose Gear	7.50 x 10, 6 ply	60

1-86. NOSE WHEEL SHIMMY DAMPER. The nose wheel shimmy damper (2) is filled with hydraulic fluid, Spec MIL-O-5606, through the filler port on the left side of the unit. Fill until fluid flows from the port.

1-87. LUBRICATION REQUIREMENTS.

1-88. PERIODIC LUBRICATION.

1-89. USE OF LUBRICATION CHARTS. (See figure 1-26.) The periodic lubrication charts indicate the various items on the helicopter requiring periodic lubrication, the recommended frequency, type of lubricant, and the method of application.

a. Each item to be lubricated is called out by an arrow leading from a lubrication frequency symbol (a circle, square, hexagon, or diamond).

b. Immediately adjacent to the frequency symbol is a number, keyed to the nomenclature list.

c. An application symbol, located within the frequency symbol, indicates the method of application.

d. Also within the frequency symbol are code letters indicating the type of lubricant.

1-90. CLIMATIC LUBRICATION.

1-91. USE OF CLIMATIC TABLE. (See figure 1-26.) The Climatic Lubrication table lists the various components requiring changes of lubricants for changes in temperature. This table should be consulted by the maintenance organization to determine the types of lubricants to be used during the various seasons and for extreme weather conditions.

SPECIAL SERVICE NOTES

Engine Oil Dilution—For cold weather operation, dilute the MIL-L-6082, grade 1100 oil as follows:

EXPECTED OUTSIDE AIR TEMPERATURE	DILUTION TIME (minutes)	PER CENT OF DILUTION		
		Engine Sump	Hopper Tank	"Y" Drain
−12.2°C (+10°F)	1.0	10	13	0
−23.3°C (−10°F)	2.0	15	15	20
−31.65°C (−25°F)	3.0	23	22	28
−37.25°C (−35°F)	4.0	30	28	32
−45.6°C (−50°F)	5.0	34	32	35
−51.1°C (−60°F)	6.0	37	34	40

Central Transmission Clutch—Drain every 50 hours and refill with new oil in accordance with Climatic Lubrication Table. It is recommended that the oil be drained immediately after flight or ground operation while the oil is still hot and has circulated throughout the clutch.

Rod End Bearings—Inspect all rod end bearings having greasing provisions at 300 hours. If bearings appear satisfactory, lubrication is not required. All rod end bearings must be cleaned and lubricated at major overhaul.

Drive Shaft Bearings—Lubricate these bearings until clean grease appears around the shields while rotating the drive shafting slowly for at least one complete revolution.

Rotor Blade Taper Pins—Every 50 hours clean and lubricate the rotor blade taper pins, blade root sockets and tapered holes in the pitch bearing housing as directed under Rotor Blade Lubrication in Section II.

Horizontal and Vertical Hinge Pins—Purge these pins daily as a preventive measure to reduce excessive wear of the pins and their needle bearings. Lubrication of the pins is recommended at postflight inspection.

Swash Plate—Turn rotor slowly and continue applying lubricant until grease appears between the lower grease shield and the bearing outer race around the entire circumference of the bearing. Lubrication of the bearing is recommended at postflight inspection.

Wheel Bearings—Every 300 hours remove the wheels and inspect the brake discs. Clean the bearings in solvent conforming to Federal Spec P-S-661 and dry with a lint-free cloth or dry air. Repack the bearings with grease, Spec MIL-L-3545.

Pitch Bearing Housings—Check daily for leakage.

Control Cables—Prior to installation, all control cables are treated with a dip coating of corrosion preventive compound. To maintain the anti-corrosive quality, wipe all cables periodically with corrosion preventive compound, Spec MIL-C-6708, type I or a similar approved corrosion preventive.

Miscellaneous Hinges and Bearings—For miscellaneous hinges and bearings, such as latches, seat adjustment mechanism, engine cooling air exit doors, etc, use oil, Spec MIL-L-7870, as required.

NOMENCLATURE KEY FOR SHEET 2

1 Hydraulic System Reservoir
2 Forward Transmission Drive Shaft Bearings
3 Central Transmission
4 Aft Transmission Drive Shaft Bearings
5 Aft Transmission
6 Engine Oil Tank
7 Central Transmission Clutch
8 Sliding Door Guides
9 Bomb Racks—H-21B and H-21C
10 Sliding Window Guides
11 Rescue Hoist Gear Case
12 Hydraulic Wheel Brake Cylinders
13 Forward Transmission
14 Hoist Boom Support
15 Collective Pitch Bevel Gears

CLIMATIC LUBRICATION TABLE

	HIGH TEMPERATURE			NORMAL TEMPERATURE			LOW TEMPERATURE		
	Type	Grade	Temp Range	Type	Grade	Temp Range	Type	Grade	Temp Range
ENGINE	Use MIL-L-6082 1100 for all temperatures above 5°C (41°F)						MIL-L-6082	1100	Dilute below 5°C (41°F) See note below
TRANSMISSIONS	MIL-L-6082	1100	above −1°C (30°F) to max of MIL-L-6082	MIL-L-6082	1065	38 to −12°C (100 to 10°F)	MIL-L-7808 (ESSO WS2211)		38 to −54°C (100 to −65°F)
PITCH BEARINGS	MIL-L-6082	1065	38 to −12°C (100 to 10°F)	MIL-L-6082	1065	38 to −12°C (100 to 10°F)	MIL-O-5606		−1 to −54°C (30 to −65°F)
RESCUE HOIST GEAR CASE	MIL-L-6082	1100	above −1°C (30°F) to max of MIL-L-6082	MIL-L-6082	1065	38 to −12°C (100 to 10°F)	MIL-O-6086	L	−12 to −54°C (10 to −65°F)
HYDRAULIC SYSTEMS	Use MIL-O-5606 petroleum base fluid for all temperature ranges.								
GREASED CONNECTIONS	On all greased connections use MIL-G-3278 grease for all temperature ranges.								

Note: Oil dilution data is given in the Special Service Notes.

Figure 1-26. Lubrication Chart (Sheet 1 of 4)

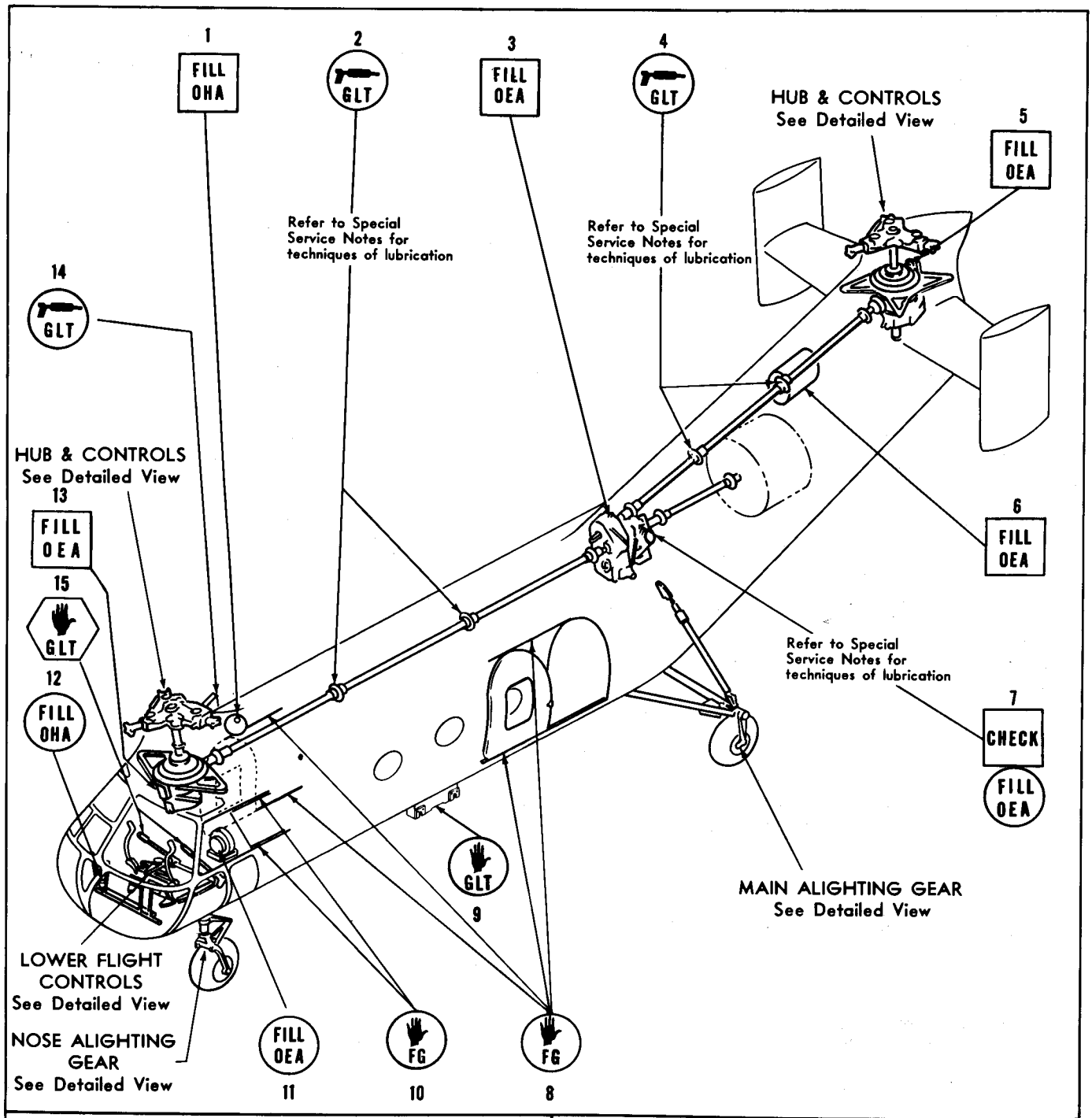

TABLE OF LUBRICANTS

(For type, grade, and temperature range, see Climatic Lubrication Table.)

Identification Letter	Base Specification	Type of Lubricant
GLT	MIL-G-3278	Grease, Aircraft and Engine, High and Low Temperature
OHA	MIL-O-5606	Oil, Hydraulic, Petroleum Base
OEA	MIL-L-6082	Oil, Lubricating, Aircraft Engine
FG	MIL-G-6711	Graphite, Lubricating
GH	MIL-L-3545	Grease, High Temperature

FREQUENCY SYMBOLS

DAILY · 50 HOUR · 150 HOUR · 300 HOUR · 500 HOUR

APPLICATION SYMBOLS

Grease Gun · Hand · Squirt Gun

Figure 1-26. Lubrication Chart (Sheet 2 of 4)

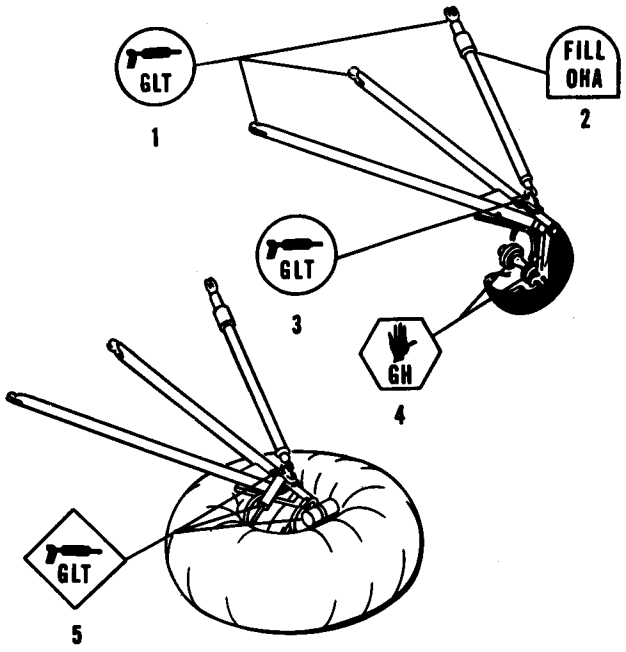

YH-21 MAIN ALIGHTING GEAR AND DONUT FLOAT LUBRICATION

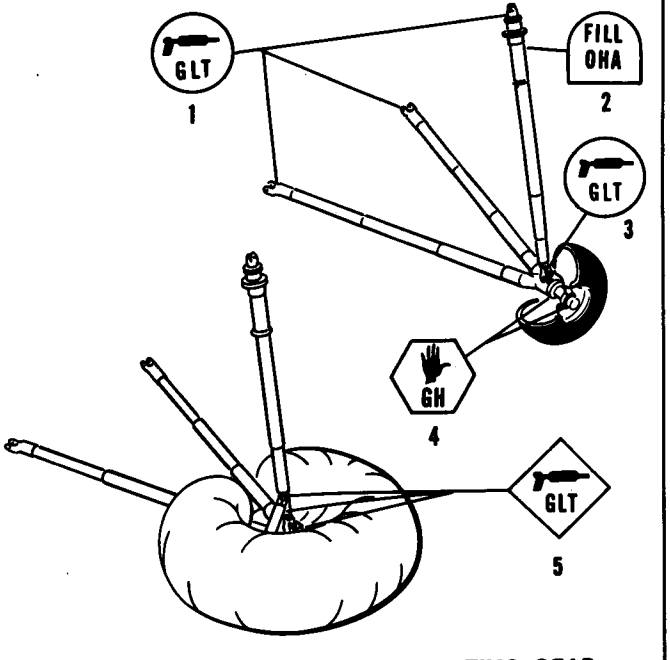

H-21A, H-21B & H-21C MAIN ALIGHTING GEAR LUBRICATION AND FLOAT LUBRICATION FOR H-21A HELICOPTERS

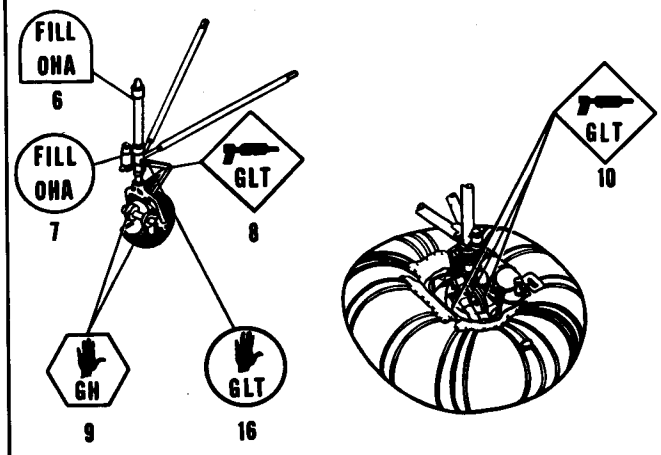

NOSE ALIGHTING GEAR LUBRICATION AND FLOAT LUBRICATION FOR YH-21 & H-21A HELICOPTERS

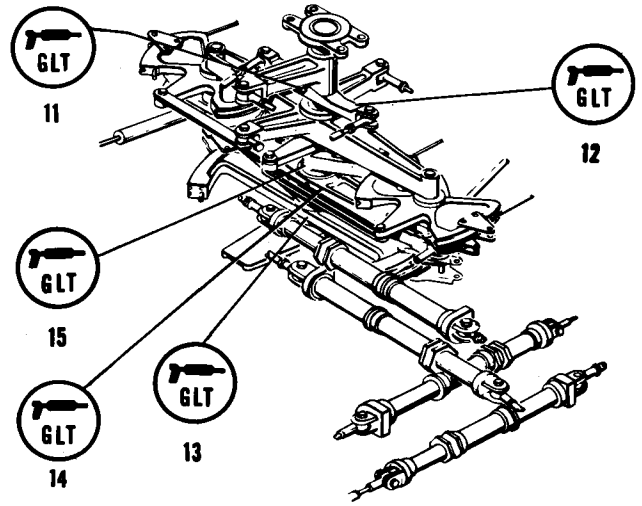

LOWER DIFFERENTIAL CONTROLS LUBRICATION

NOMENCLATURE KEY FOR SHEET 3

1 Main Alighting Gear Pivot Points
2 Main Alighting Gear Shock Strut
3 Main Alighting Gear Pivot Points
4 Main Alighting Gear Wheel Bearings
5 Donut Floats Jettison Points
6 Nose Alighting Gear Shock Strut
7 Nose Alighting Gear Shimmy Damper
8 Nose Alighting Gear Scissors
9 Nose Alighting Gear Wheel Bearings
10 Flotation Equipment Jettison Points
11 Bellcrank Assembly
12 Walking Beam Assembly
13 Quadrant Assembly
14 Walking Beam Assembly
15 Bellcrank Assembly
16 Nose Alighting Gear Lock Pin

NOMENCLATURE KEY FOR SHEET 4

1 Pitch Bearing Cases (3 per rotor)
2 Pitch Arm Trunnion (3 per rotor)
3 Vertical Hinge Pin Bearings (6 per rotor)
4 Horizontal Hinge Pin Bearings (6 per rotor)
5 Drive Scissors Collar
6 Pitch Link (3 per rotor)
7 Drive Scissors (2 fittings per rotor)
8 Swash Plate (2 fittings per rotor)
9 Lateral Cyclic Link (2 rod ends)
10 Universal Blocks (4 fittings per rotor)
11 Bellcrank Assembly (2 fittings per rotor)
12 Quadrant Assembly (3 fittings per rotor)
13 Swash Plate Trunnions (2 fittings per rotor)
14 Lag Damper Bearings (9 fittings per rotor)

Figure 1-26. Lubrication Chart (Sheet 3 of 4)

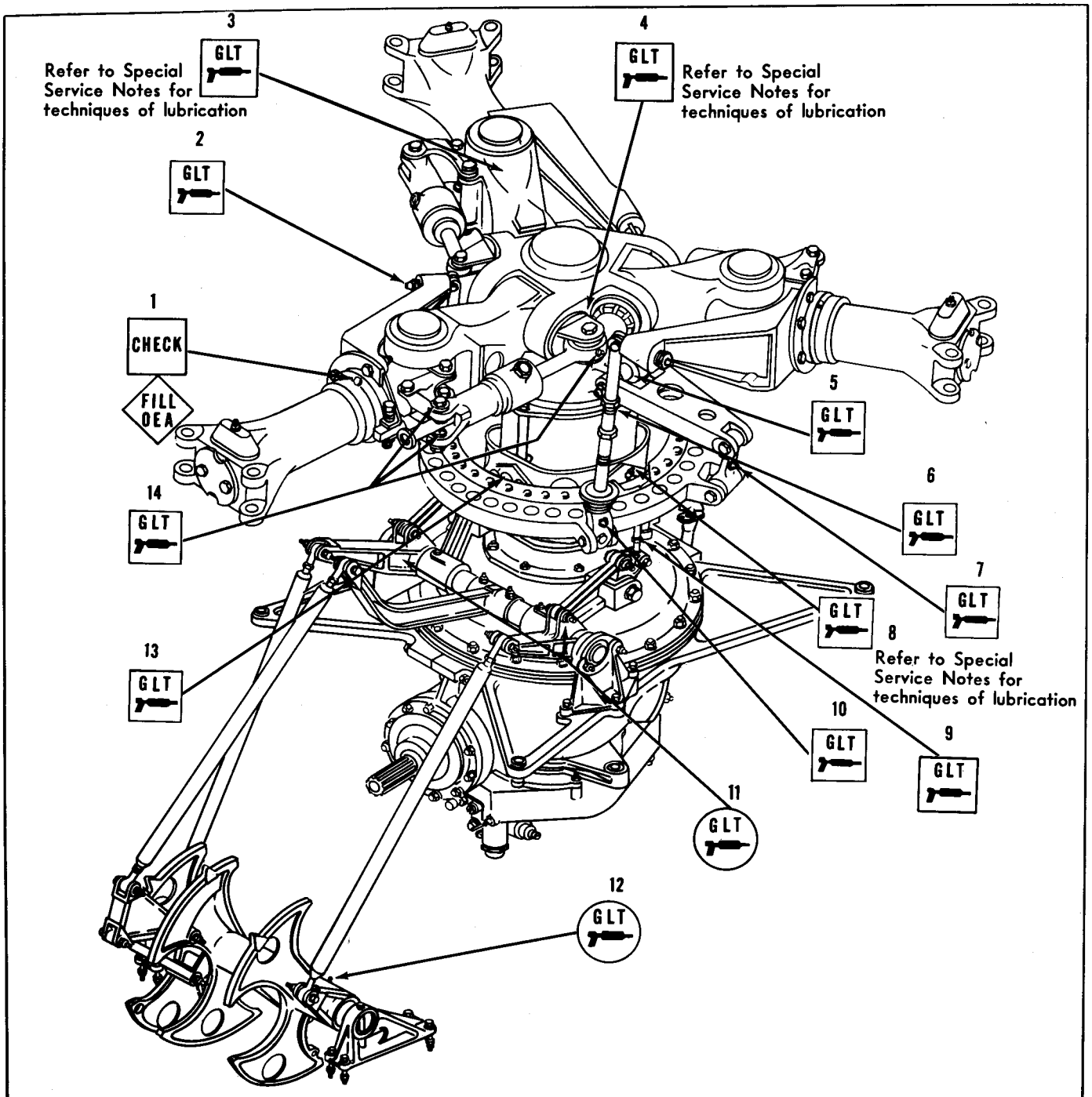

TABLE OF LUBRICANTS

(For type, grade, and temperature range, see Climatic Lubrication Table.)

Identification Letter	Base Specification	Type of Lubricant
GLT	MIL-G-3278	Grease, Aircraft and Engine, High and Low Temperature
OHA	MIL-O-5606	Oil, Hydraulic, Petroleum Base
OEA	MIL-L-6082	Oil, Lubricating, Aircraft Engine
FG	MIL-G-6711	Graphite, Lubricating
GH	MIL-L-3545	Grease, High Temperature

FREQUENCY SYMBOLS

DAILY | 50 HOUR | 150 HOUR | 300 HOUR | 500 HOUR

APPLICATION SYMBOLS

Grease Gun | Hand | Squirt Gun

Figure 1-26. Lubrication Chart (Sheet 4 of 4)

TABLE 1-3

RECOMMENDED TORQUE—STANDARD HARDWARE

BOLTS AND NUTS

These values are for dry, unlubricated bolts and nuts. When lubrication is used, lower the values by 30 per cent. To properly torque, tighten the bolt or nut until mating surfaces of the nut and bolt head are firmly bottomed against their bearing surfaces. After this preliminary tightening, engage the torque wrench and apply pressure slowly and firmly until the correct torque is obtained. Exercise caution not to exceed the recommended torque.

Thread Size	Steel		Aluminum		Internal Wrenching Nuts
	AN365 & AN310	AN364 & AN320	AN365D & AN310D	AN364D & AN320D	
	Torque in Pound-Inches				
10-32	30–35	18–20	.....	.....	.....
1/4-28	75–85	45–50	35–40	20–25	65–90
5/16-24	190–200	115–120	95–100	55–65	130–180
3/8-24	300–330	180–200	150–165	90–100	220–360
7/16-20	450–500	270–300	225–250	135–150	370–610
1/2-20	600–750	360–450	300–375	180–225	630–950
9/16-18	800–1000	480–600	400–500	240–300	1000–1300
5/8-18	1100–1800	660–780	550–650	300–390	1400–1700
3/4-16	2300–2500	1300–1500	1150–1250	690–750	2400–3100
7/8-14	3500–4000	2100–2400	1750–2000	1050–1200	3700–4900
1-14	4650–6000	2800–3600	2325–3000	1400–1800	5100–7900
1-1/8-12	5800–7800	3480–4680	2900–3900	1740–2340	6900–9500
1-1/4-12	9000–11000	5400–6600	4500–5500	2700–3300	11500–14000

STUDS AND NUTS

These values are for dry, unlubricated studs and nuts. When lubrication is used, lower the values by 30 per cent. To properly torque, tighten the nut until mating surfaces are firmly bottomed. After this preliminary tightening, engage the torque wrench and apply pressure slowly and firmly until the correct torque is obtained. Exercise caution not to exceed the recommended torque.

Thread Size	Steel		Aluminum	
	AN365 & AN310	AN364 & AN320	AN365D & AN310D	AN364D & AN320D
	Torque in Pound-Inches			
10-32	20–25	12–15	10–14	.....
1/4-28	50–70	30–40	25–35	15–20
5/16-24	100–140	60–85	50–70	30–40
3/8-24	160–190	95–110	80–100	45–60
7/16-20	450–500	270–300	220–250	130–150
1/2-20	480–690	280–400	240–350	140–210
9/16-18	800–1000	480–600	400–500	240–300
5/8-18	1100–1300	660–780	550–650	330–400

GENERAL INSTRUCTIONS WHEN USING TORQUE WRENCHES

Torque Wrenches can become inaccurate due to mishandling or after considerable use and should be calibrated frequently by using weights and a measured lever arm. Checking one wrench against another will not always indicate inaccuracies and is not an accepted method of calibration.

Correct use of a torque wrench is important and the manufacturer's recommendations should be strictly adhered to. The force should be applied slowly and evenly until the specified tightening torque is reached and then held at this value until the nut, bolt, or screw has stopped turning.

Extension arms or adapters should not be used between a torque wrench and the part to which the torque is applied unless the adapter has been specifically designed for that purpose.

When it is necessary to align locking pin holes, the following procedure is recommended:

(a) Tighten the nut initially to the minimum torque value.

(b) If the holes do not align at the minimum torque value, continue to tighten the nut to obtain alignment, but in no case exceed the maximum torque value specified.

(c) When alignment is not reached within the specified torque limits, back off the nut and tighten again as outlined above.

(d) If the holes do not align after retightening the nut, select another nut and repeat the torquing operations as outlined above until alignment is effected. In the case of locking devices other than pins, selection of parts may be necessary to obtain proper locking position within the specified torque range.

There may be some instances arising which are not covered by, or are exceptions to, the limits given in the above table. In such cases good common sense and sound judgment should, of course, be exercised.

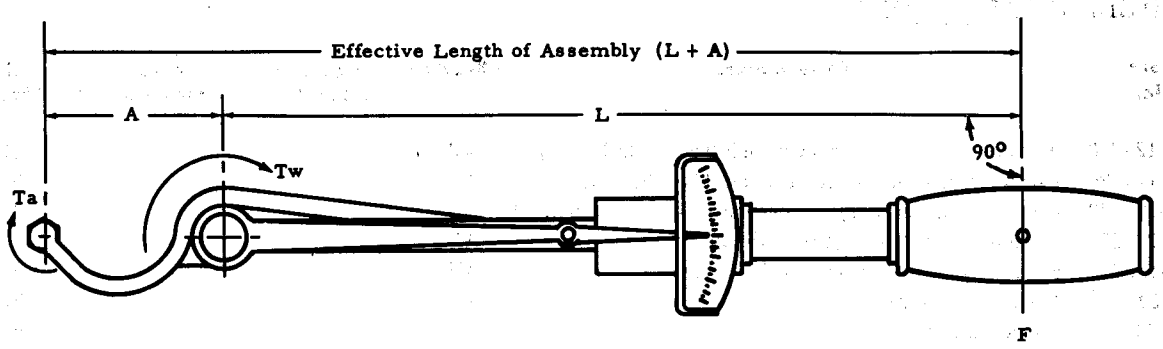

INSTRUCTIONS WHEN USING ADAPTERS WITH TORQUE WRENCHES

T_w is the torque indicated on the dial of the torque wrench.

T_a is the torque applied at the end of the adapter.

L is the lever length of the wrench.

A is the effective length of the adapter (measured in a straight line).

F is the force (pull) applied at the handle.

Torque wrench alone

$$T_w = F \times L$$

Torque wrench and extension

$$T_w = \frac{T_a \times L}{(L + A)}$$

$$T_a = \frac{T_w \times (L + A)}{L}$$

Problem:

Torque the engine keel attaching bolts to 1000–1400 pound-inches using the engine keel nut wrench (22E5902). Find the dial reading on the torque wrench.

T_a = 1000 and 1400 pound-inches.

A = 4.75 inches by measurement between points.

L = 20 inches by measurement. The torque wrench must be checked and whatever length that exists must be used.

$$T_w = \frac{1000 \times 20}{20 + 4.75} = \frac{20{,}000}{24.75} = 808 \text{ lb-in. minimum}$$

$$T_w = \frac{1400 \times 20}{20 + 4.75} = \frac{28{,}000}{24.75} = 1132 \text{ lb-in. maximum}$$

Notes on usage of a torque wrench and an adapter:

1. The adapter drive point must be in a straight line with the centerline of the torque wrench.
2. The length L must be measured from the center of the drive square to the center of the hinge pin on the torque wrench handle. If the handle is not hinged, the measurement must be from the center of the hand fitted to the handle contour and, while torquing, care must be exercised to maintain the hand grip in that location only, since to move slightly in either direction will cause considerable torque variation.

1-92. SPECIAL TOOLS AND EQUIPMENT.

1-93. SPECIAL TOOLS LIST.

1-94. HELICOPTER TOOLS.

Part No.	Nomenclature	Effectivity	Figure & Index No.	Federal Stock No.	USAF Stock No.
SWE-124210	Anchor plate assy—powerench (rotor hub nut)	All			9BSK
SWE-124220	Anchor plate assy—powerench (fan hub nut)	All			9BSK
SWE-124230	Anchor adapter assy—powerench (rotor hub nut)	All			9BSK
SWE-12625	Socket—powerench (fan hub nut)	All			9BSK
SWE-12626	Socket—powerench (rotor hub nut)	All			9BSK
SWE-54	Tension Indicator	All			9BSK
SWE-63	Work handle	All			9BSK
SWE-67	Ratchet adapter	All			9BSK
SWE-8100	Power unit	All			9BSK
22E5008	Hoist installation—engine	All			8220-407010
22E5008-1	Fitting—fwd engine removal hoist	All	5-2, 1		8220-019305
22E5008-2	Fitting—aft engine removal hoist	All	5-2, 2		8220-019305-5
22E5008-33	Fwd sling—engine removal	All	5-2, 4		9900
22E5008-4	Aft sling—engine removal	All	5-2, 5		9900
22E5008-50	Hoist installation engine	All			8220-407012
22E5012-1	Cover—engine air inlet and transmission oil cooler outlet	All	1-7		2000-202975
22E5013-18	Cover—blade tip	All	1-7	8340-300-2078	2000-182305
22E5014-1	Cover—nose	All	1-7		2000-237630
22E5015-1	Cover—fwd rotor hub	All	1-7		2000-238972-5
22E5015-10	Cover—aft rotor hub	All			2000-238924
22E5016-6	Cover—aft rotor blade	All		8340-300-2114	2000-272710
22E5016-7	Cover—fwd rotor blade	All		8340-300-2115	2000-272710-5
22E5076-1	Rigging pin—fwd upper flight controls	All	2-21		9BPH
22E5077-1	Rigging pin—collective pitch lever throttle	All	5-20, 21 5-20A, 4		9BPH
22E5079-1	Rigging pin and support lever—differential controls	All	2-23, 1		9BPH
22E5080-1	Rigging pin—aft upper flight controls	All	2-27, 1 2-22		9BPH
22E5081-1	Rigging pin—aft engine control quadrants	All	5-20, 9 5-20A, 14		9BPH
22E5081-2	Rigging pin—fwd engine control quadrants	All	5-20, 23 5-20A, 7		9BPH
22E5093-1	Cover—engine air outlet	All			2000-176900
22E5093-19	Cover—engine air outlet	H-21B H-21C	1-7		2000-176905
22E5103-23	Saddle—blade rack	All	1-5		
22E5108-1	Blade rack (2R)	All	1-5, 7		8200-770400
22E5108-12	Blade rack (1R)	All	1-5, 8		8200-770200
22E5108-13	Blade rack (1L)	All	1-5, 1		8200-770300
22E5108-4	Blade rack (2L)	All	1-5, 2		8200-770403
22E5108-5	Blade rack (3L)	All	1-5, 3		8200-770404
22E5108-6	Blade rack (3R)	All	1-5, 6		8200-700405
22E5111-2	Sling—helicopter	All	1-2, 1		8220-600174
22E5119-1	Pole—blade tie-down sock	All	1-27		8200-735241
22E5131-1	Cover—engine exhaust stack	H-21A			2000-234505
22E5141-1	Tow bar—nose alighting gear	H-21A, H-21B, H-21C	1-27		8200-903062
22E5141-3	Tow bar—nose alighting gear (22E5141-1 with adapters)	YH-21	1-27		8200-903062-5
22E5144-1	Adapter—Tow Bar LH	YH-21	1-27, 1		
22E5144-2	Adapter—Tow Bar RH	YH-21	1-27, 2		
22E5809	Wrench—to remove lock nut from rotor shaft	All	1-27		9BPH

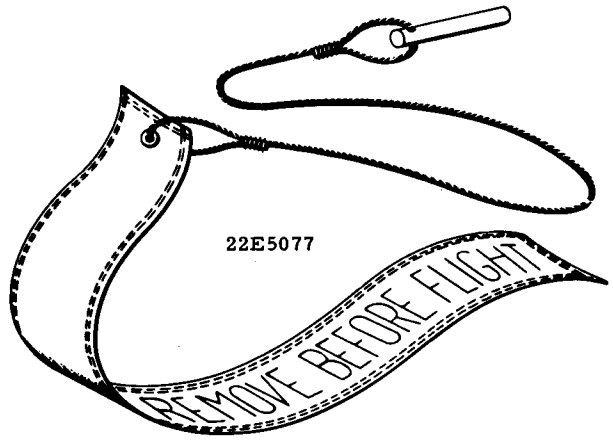

22E5077

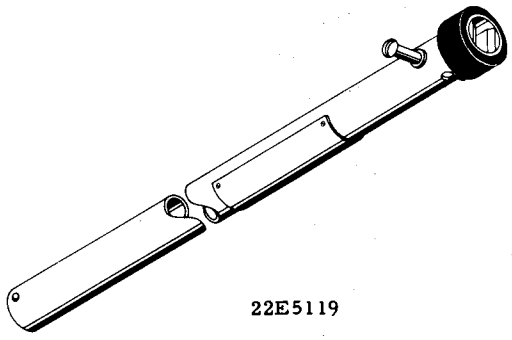

22E5119

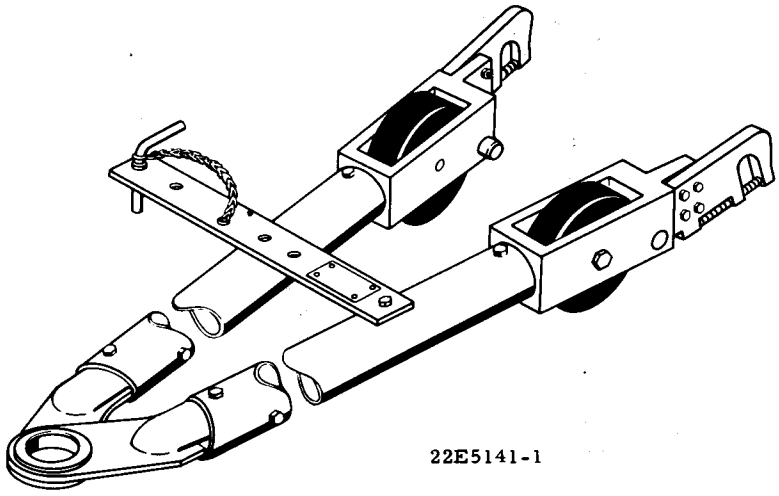

22E5141-1

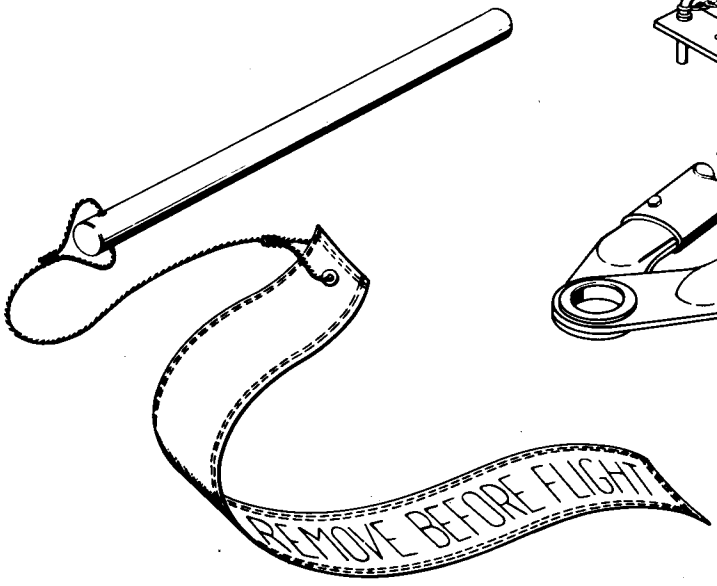

22E5081-1 & -2

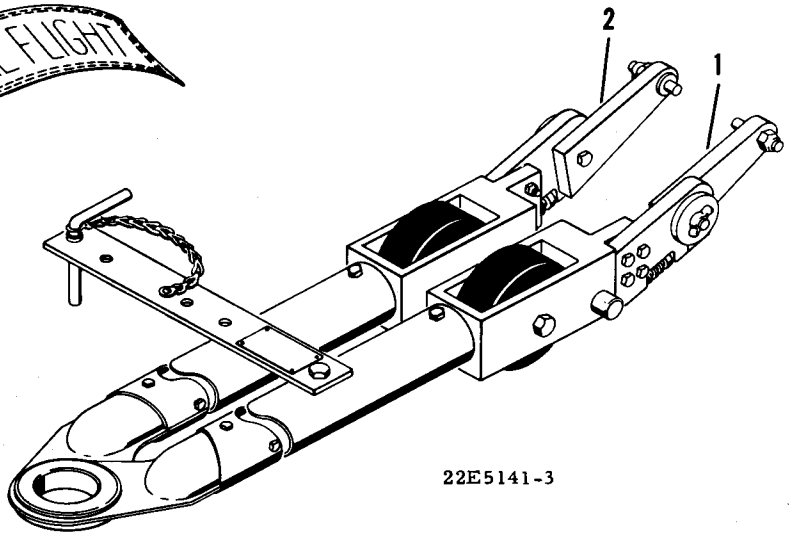

22E5141-3

Figure 1-27. Special Helicopter Tools (Sheet 1 of 5)

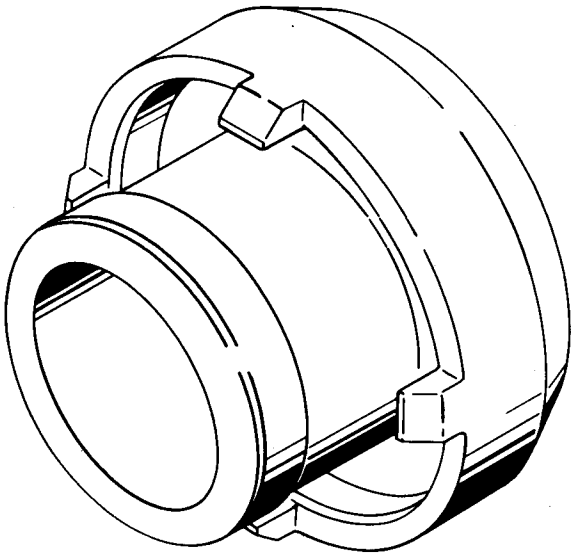

22E5809

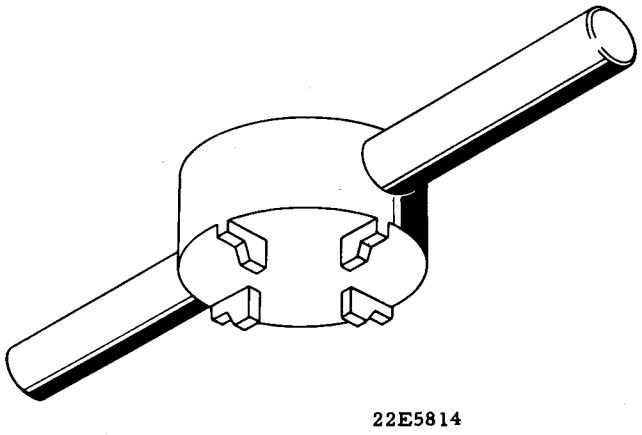

22E5814

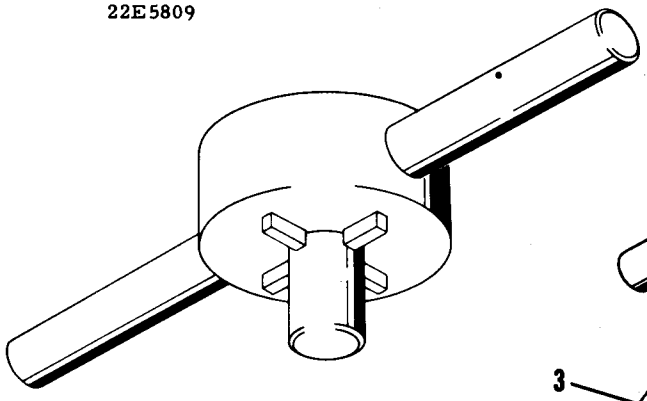

22E5813

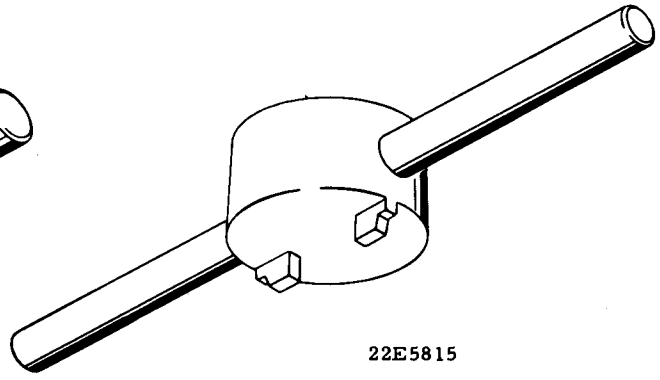

22E5815

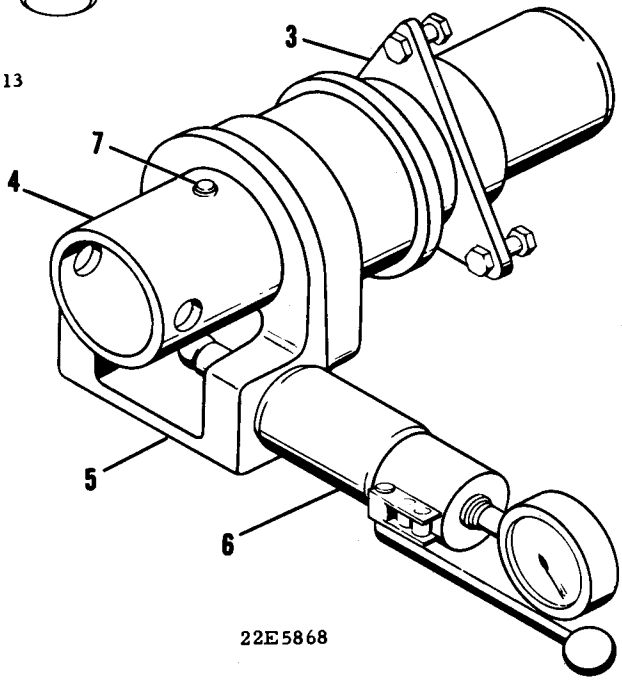

22E5868

Figure 1-27. Special Helicopter Tools (Sheet 2 of 5)

Part No.	Nomenclature	Effectivity	Figure & Index No.	Federal Stock No.	USAF Stock No.
22E5813	Wrench—pitch link universal nut	All	1-27		9BPH
22E5814	Wrench—drive scissors lower nut	All	1-27		9BPH
22E5815	Wrench—drive scissors upper nut	All	1-27		9BPH
22E5838	Lifting eye—rotor transmission	All	5-37, 1		8220-019300
22E5858-1	Lifting eye—central transmission	All	5-37, 4		8220-015200
22E5862	Rigging fixture set—rotor swash plate (22E5862-1 aft and 22E5862-2 fwd)	All	2-27, 6		9BPH
22E5864-1	Engine dolly	All	5-2, 7		8220-750440
22E5867	Puller—blade attachment taper pins	All	2-2		9BPH
22E5868-1	Hydraulic torque wrench—fan hub nut	All	1-27		9BPH
22E5868-2	Adapter plate (Kell-Strom Tool Co KS-2105)	All	1-27, 1		9BPH
22E5868-20	Adapter assembly (22E5868-2 and -3)	All	1-27		9BPH
22E5868-3	Socket wrench (Kell-Strom Tool Co KS-2106)	All	1-27, 2		9BPH
22E5868-4	Wrench housing (Kell-Strom Tool Co HSP-ST-5003)	All	1-27, 3		9BPH
22E5868-5	Hydra-Pak unit (Kell-Strom Tool Co HSP-ST-5006)	All	1-27, 4		9BPH
22E5868-6	Wrench pin (Kell-Strom Tool Co HSP-ST-5004)	All	1-27, 5		9BPH
22E5868-7	Shoulder screw	All	1-27		9BPH
22E5870	Mounting fixture—blade incidence setting	All			9BPH
22E5878	Wrench—main and nose gear oleo strut	YH-21	1-27		9BPH
22E5880	Wrench—for turning crankshaft during engine valve and magneto timing	All	1-27		9BPH
22E5891	Wrench—blade angle incidence setting	All	2-3, 2		9BPH
22E5893-1	Sling—helicopter power plant	All	1-27		8220-616350
22E5900	Spreader—rotor blade socket	All			9BPH
22E5902	Wrench—engine keel nut	All	1-27		9BPH
22E5903	Wrench—engine keel bolt	All	1-27		9BPH
22E5904	Gage—swash plate trunnion locator	All	1-27		9BPH
22E5915	Wrench—rotor transmission sump pressure relief valve cap	H-21B H-21C	1-27		9BPH
22E5922	Spanner wrench—for transmission drive shaft retaining nut	All	1-27		9BPH
22E5924	Torque wrench adapter—for use when torquing forward and aft transmission lower mounting nuts	All	1-27		9BPH
22E5930	Puller—to remove hub assembly from rotor shaft	All	1-27		9BPH
22E5943	Flag—rotor blade tracking	All	1-27 1-9A, 29	4920-347-8849	9BPH
22E5944	Tracking pole	All	1-9A, 1		9BPH
22E5945	Pin—rotor hub pitch lock	H-21B, H-21C	1-5, 11 1-27	4920-326-2626	9BPH
22E5947	Wrench—central transmission clutch, manual operating	All	1-27		9BPH
22E5949	Installer—composition rubber insert, central transmission	All	5-38		9BPH
22E5954	Puller—rotor hub	All	1-27		9BPH
22E5958	Metal container—rotor blade	All	1-29		
22E5959	Rigging fixture set—rotor swash plate (22E5959-1 fwd and 22E5959-2 aft)	All	2-27, 6		9BPH
22E5961	Metal container—central transmission	All	1-32E		
22E5962	Metal container—rotor transmission	All	1-32A 1-32B		
22E5963	Metal container—rotor hub	All	1-35		
22E5972	Remover—blade taper pin	All	1-27		9BPH
22E5973	Pole—blade removal	All			8200-735241-85
22E5976	Protractor base—blade incidence setting	All	2-3, 4		9BPH
22E5977	Stand—rotor blade incidence setting	All	2-3, 5		9BPH
22E5978	Stand—blade incidence setting	All		4920-300-3052	
22E5982	Indicator—tab angle	All			9BPH
22E5983	Clamp—rotor blade tab setting	All			9BPH

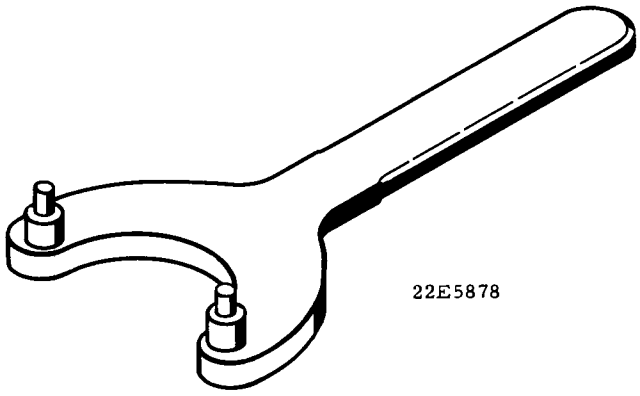

22E5878

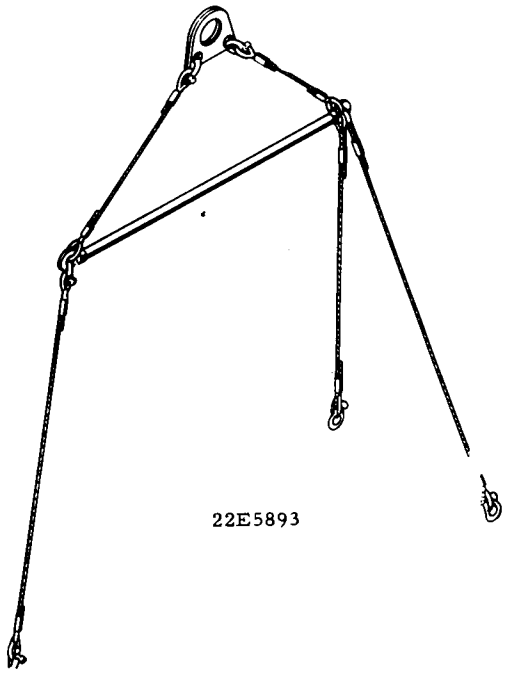

22E5893

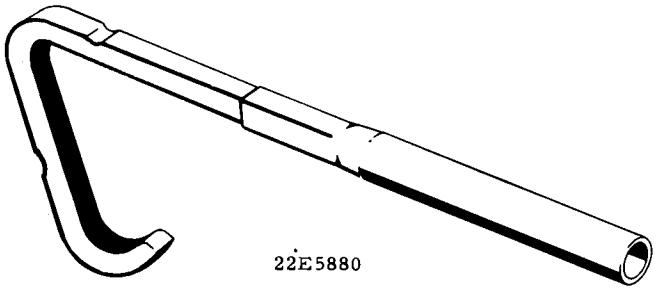

22E5880

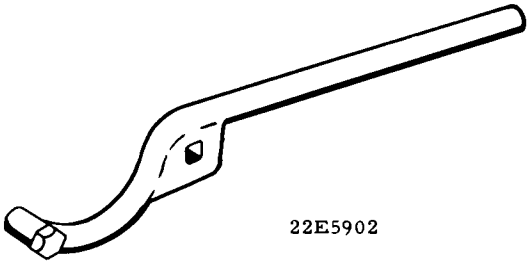

22E5902

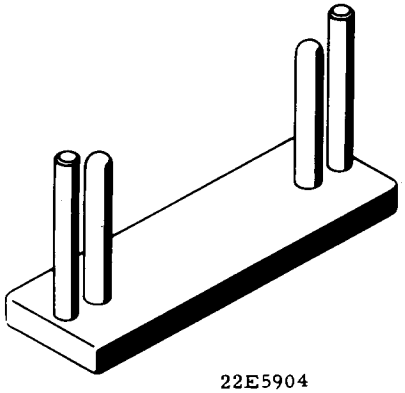

22E5904

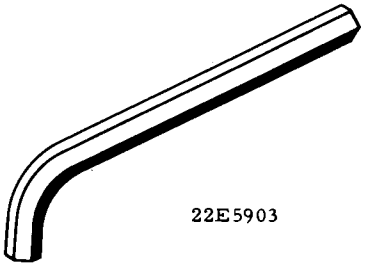

22E5903

Figure 1-27. Special Helicopter Tools (Sheet 3 of 5)

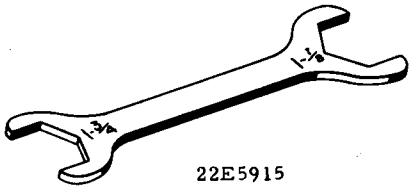

22E5915

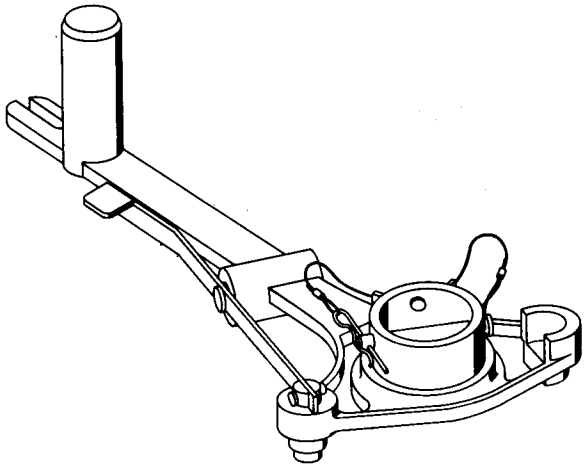

42E5051

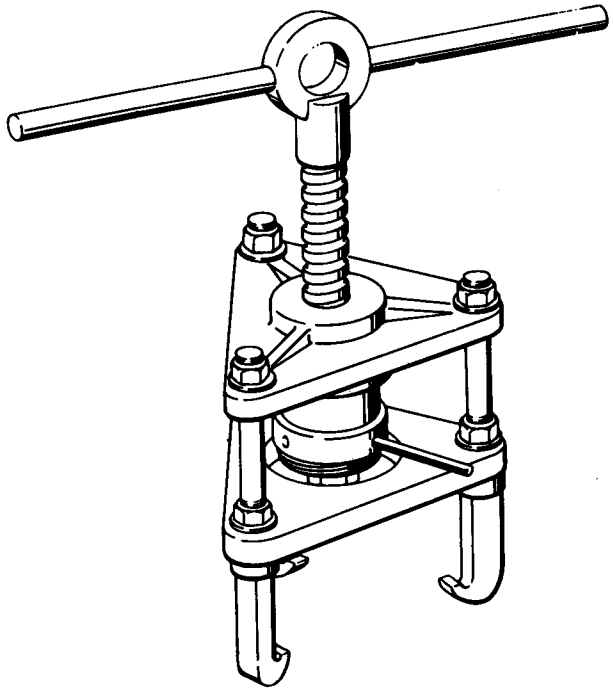

22E5930

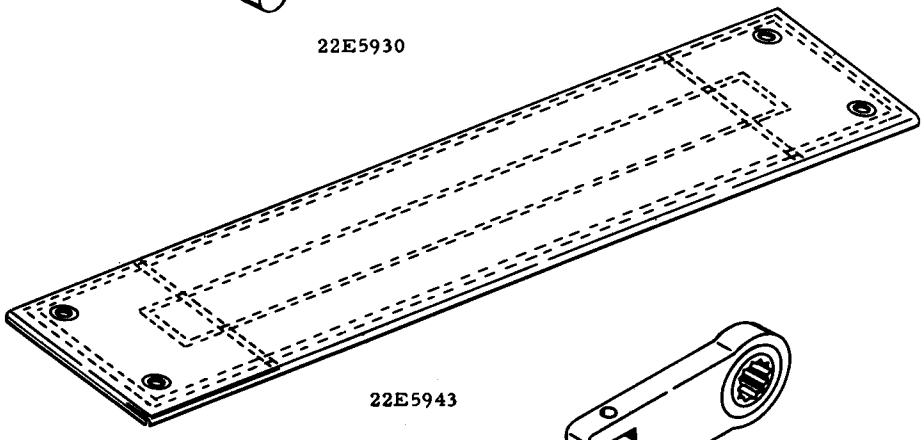

22E5943

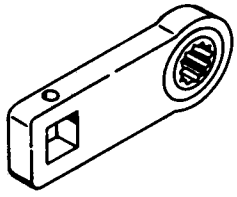

22E5924

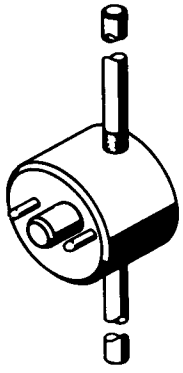

22E5922

Figure 1-27. Special Helicopter Tools (Sheet 4 of 5)

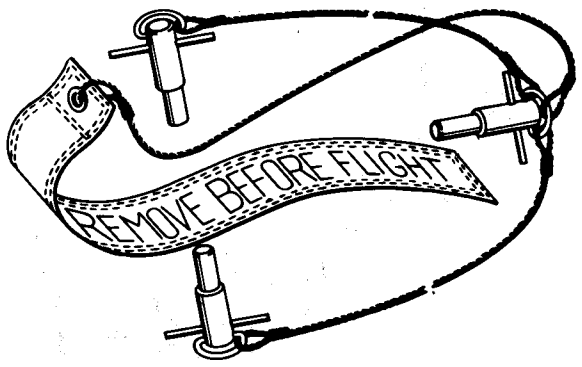

22E5945

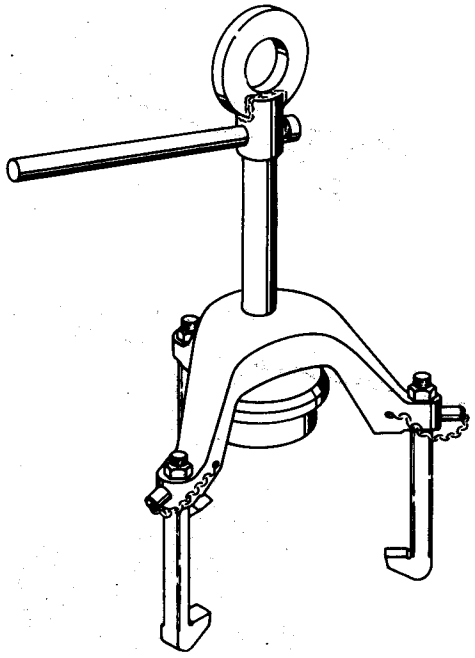

22E5954

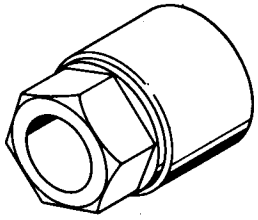

22E5972

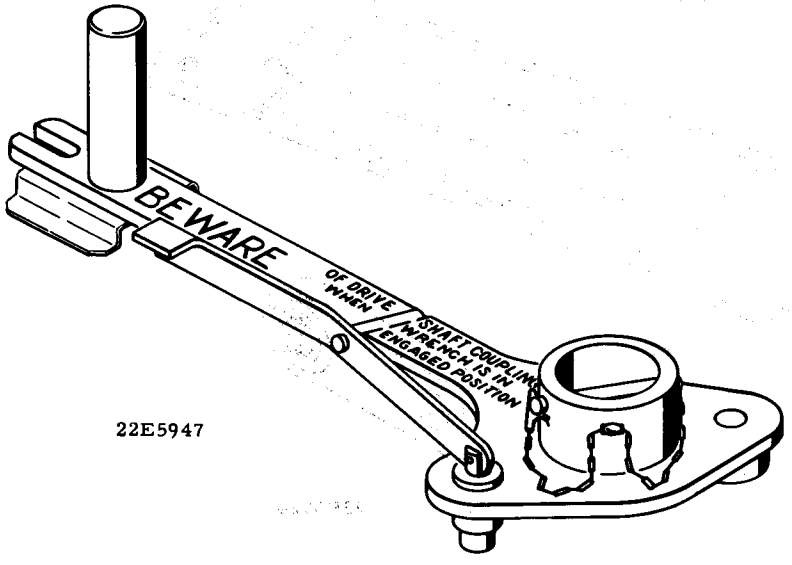

22E5947

Figure 1-27. Special Helicopter Tools (Sheet 5 of 5)

Part No.	Nomenclature	Effectivity	Figure & Index No.	Federal Stock No.	USAF Stock No.
22E5987	Holding fixture, blade incidence setting	All	2-3, 1	4920-329-8774	9BPH
42E5017-1	Cover—pitot tube	All	1-7		2000-270254
42E5131-10	Cover—engine exhaust	H-21B, H-21C	1-7		2000-234510
42E5051-1	Wrench—clutch manual operation	H-21B, H-21C	1-27		9BPH

1-95. ENGINE TOOLS.

Part No.	Nomenclature	Figure No.	Index No.	USAF Stock No.
800315	Wrench—timing hole plug and oil sump drain plug	1-28		9AWA
800630	Wrench—crowfoot, ignition wire spark plug terminal	1-28		9AWA
800684	Wrench—oil pump foot and dual accessory drive housing to supercharger rear cover nut	1-28		9AWA
800821	Wrench—supercharger drain valve body, T-socket	1-28		9AWA
801080	Wrench—generator attaching nut	1-28		9AWA
801081	Wrench—starter attaching nut	1-28		9AWA
801719	Installing tool—fuel pump drive shaft oil seal	1-28		9AWA
801999	Wrench—oil pressure relief valve adjusting screw nut	1-28		9AWA
802112	Plug—cylinder spark plug hole (2 required per cylinder; 18 required per set)	1-28		9AWA
802117	Screw—cylinder to crankcase locating (2 required per cylinder)	1-28		9AWA
803145	Clamp—piston ring	1-28		9AWA
803328	Installing tool—magneto and generator drive shaft oil seal	1-28		9AWA
803372	Wrench—oil pressure relief valve	1-28		9AWA
803777	Installing tool—valve tappet circlet	1-28		9AWA
803830	Cover—intake pipe packing nut	1-28		9AWA
803837	Cover—cylinder exhaust port	1-28		9AWA
804351	Cover—cylinder intake port	1-28		9AWA
804439	Removing and installing tool—fuel pump and tachometer drive shaft oil seal arbor press	1-28		9AWA
804671	Wrench—propeller shaft hydro oil connection cover nut	1-28		9AWA
804885	Wrench—oil pump to supercharger rear cover nut	1-28		9AWA
805681	Wrench—cylinder hold-down cap screw	1-28		9AWA
805725	Tap—spark plug insert spark plug hole	1-28		9AWA
805866	Wrench—intake pipe packing nut	1-28		9AWA
805940	Scale—piston position indicator, Gabb Mfg Co, East Hartford, Connecticut, Cat. No. 1-209-2	1-28		9AWA
805943	Pivot arm—piston position indicator, Gabb Mfg Co, East Hartford, Connecticut, Cat. No. 1-205-B	1-28		9AWA
805964	Wrench—upper push rod housing connection nut	1-28		9AWA
805965	Wrench—lower push rod housing connection nut (used with torque wrench)	1-28		9AWA
806533	Protector—articulated rod	1-28		9AWA
806628	Wrench—oil sump to crankcase front section rear attaching nut	1-28		9AWA
806638	Installing tool—dual accessory drive vacuum pump drive gear oil seal (2 required)	1-28		9AWA
806644	Wrench—valve tappet guide attaching nuts	1-28		9AWA
806645	Jig—cylinder fins drill	1-28		9AWA
806723	Installing tool—dual accessory drive upper and lower accessory drive gear oil seal	1-28		9AWA
806750	Aligning tool—oil sump scavenge pump gear shaft	1-28		9AWA
806791	Puller—cylinder hold-down cap screw lock wire removing	1-28		9AWA
806834	Wrench—cylinder head thermocouple lead adapter lug	1-28		9AWA
806883	Wrench—valve clearance adjusting screw lock screw	1-28		9AWA
806915	Plate—master rod guide	1-28		9AWA
807108	Fixture—rear oil pump strainer disassembling and assembling	1-28		9AWA
807208	Pliers—rear oil pump strainer disassembling and assembling	1-28		9AWA
807210	Installing tool—push rod lower packing ring and washers	1-28		9AWA
808124	Installing tool—cap screw locking plate			

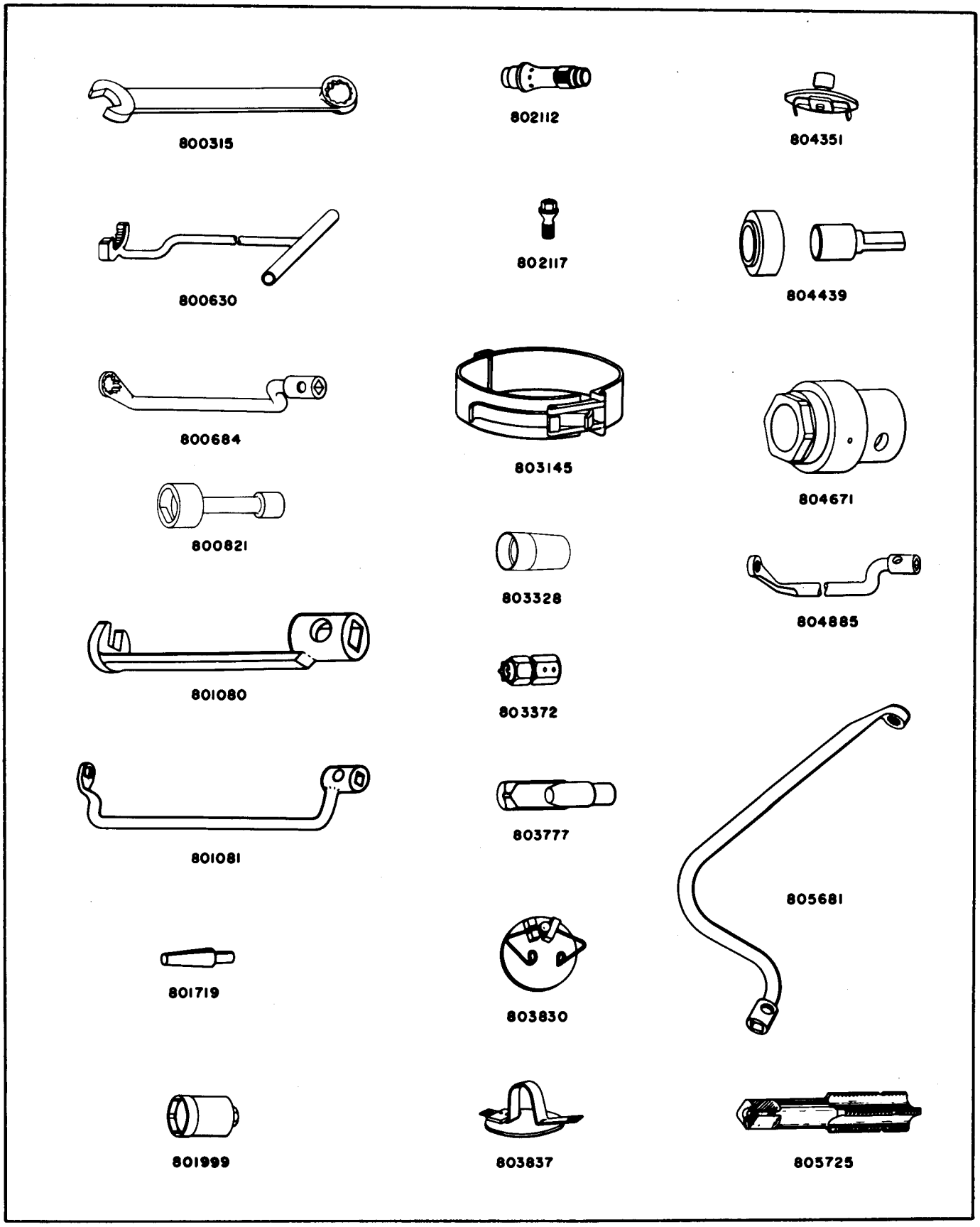

Figure 1-28. Special Engine Tools (Sheet 1 of 3)

Part No.	Nomenclature	Figure No.	Index No.	USAF Stock No.
82676	Wrench—oil pump coupling	1-28		9AWA
82703	Removing tool—push rod (used with 7/16 in. dia handle, 8 in. long)	1-28		9AWA
82889	Wrench—thrust bearing nut lug	1-28		9AWA
83130	Wrench—cylinder hold-down nut and cap screws	1-28		9AWA
84654	Wrench—starter attaching nut	1-28		9AWA
900266	Sling, engine	1-28		9AWA
923057	Puller—tachometer and fuel pump drive shaft support	1-28		9AWA
923058	Puller—piston pin	1-28		9AWA
923067	Puller—rocker arm hub bolt	1-28		9AWA
923071	Puller—oil strainer assembly	1-28		9AWA
923073	Puller—electrical tachometer drive shaft gear oil seals	1-28		9AWA
923087	Installing tool—electrical tachometer drive gear oil seals	1-28		9AWA
923152	Installing tool—tachometer drive shaft gear housing cover oil seals to shafts (2 required)	1-28		9AWA
923223	Puller—supercharger combination drain valve return tube assembly	1-28		9AWA
923224	Puller—gun synchronizer impulse generator drive substituting cover	1-28		9AWA
923225	Puller—propeller shaft hydro oil connection substituting cover	1-28		9AWA
923227	Puller—dual accessory drive oil seal	1-28		9AWA
923228	Puller—fuel pump drive shaft oil seal	1-28		9AWA
923231	Screw driver—rocker arm adjusting screw tightness checking (0.019 blade thickness)	1-28		9AWA
923232	Wrench—carburetor to supercharger rear housing attaching nut	1-28		9AWA
923306	Pliers—disc type oil strainer lock ring	5-35A		
923484	Puller—valve tappet guide	1-28		9AWA

1-96. PRESERVATION AND PACKAGING.

1-97. GENERAL. The following paragraphs contain information relative to the preservation and packaging of various helicopter components for shipment or for storage. When the helicopter is to be idle for 30 days or more, the engine, carburetor and transmissions must be preserved to prevent corrosion of internal parts and deterioration of seals and packings. In addition, if the engine is idle for more than 72 hours, it must be pre-oiled as outlined in Section V.

1-98. ROTOR BLADES. (See figures 1-29 and 1-30.) Two types of blade containers are provided for rotor blade packaging, wooden containers and metal containers. These containers provide protection for the blade set and support during storage.

1-99. ROTOR BLADE METAL CONTAINERS. (See figures 1-29 and 1-29A.)

CAUTION

Before installing the rotor blades in the container, allow the container to remain open in a dry place for at least 48 hours. This is especially recommended if the container is new or has been recently refinished, since a chemical action caused by zinc chromate primer and/or olive drab paint will result in corrosion of any unpainted AN standard parts or cadmium plated surfaces.

The rotor blade metal container is a two-piece cylindrical aluminum container weighing 257 pounds. The container is 245 inches long, 27 inches wide and 28 inches high. Steel lift rings and wooden skids are attached to the bottom section of the container for ease of handling and storage. Forty-eight spring type fasteners secure the two sections together to form a rigid container. Attached to the inside of the cover section of the container are six two-inch wide sections of aluminum channel. These sections may be removed and used as a spacer between the upper and lower sections of the container when storing wooden rotor blades. To install the spacer sections, follow the instructions given in the instruction sheet found in the container. Five rubber impregnated molded shock mounts provide protection for the blades. These shock mounts are coated with a cork composition which prevents the blades from shifting if the container is dropped. To place the blades in the metal container, proceed as follows:

a. Clean the root ends of the blades and wrap them with grease-resistant paper, Spec JAN-B-121, grade A.

b. Loosen the 48 spring fasteners and lift off the top section of the container.

c. Place the first blade of the set in the lower section of the container, with its leading edge down. Place the second blade in the container so that its root end is beside the tip of the first blade. The last blade of the set is installed in the same position as the first blade.

Note

All blades must be installed in the container with the leading edge down.

d. Place desiccant, Spec MIL-D-3464, in the bottom section of the container and replace the cover. Tighten the 48 fasteners.

1-100. ROTOR BLADE WOODEN CONTAINER. (See figure 1-30.) A reinforced waterproof plywood box is also used for storing and shipping blades. This box is 249 inches long, 28-1/4 inches wide and 25-1/2 inches high and weighs approximately 705 pounds. Two blade supports, one at each end of the box, provide support and protec-

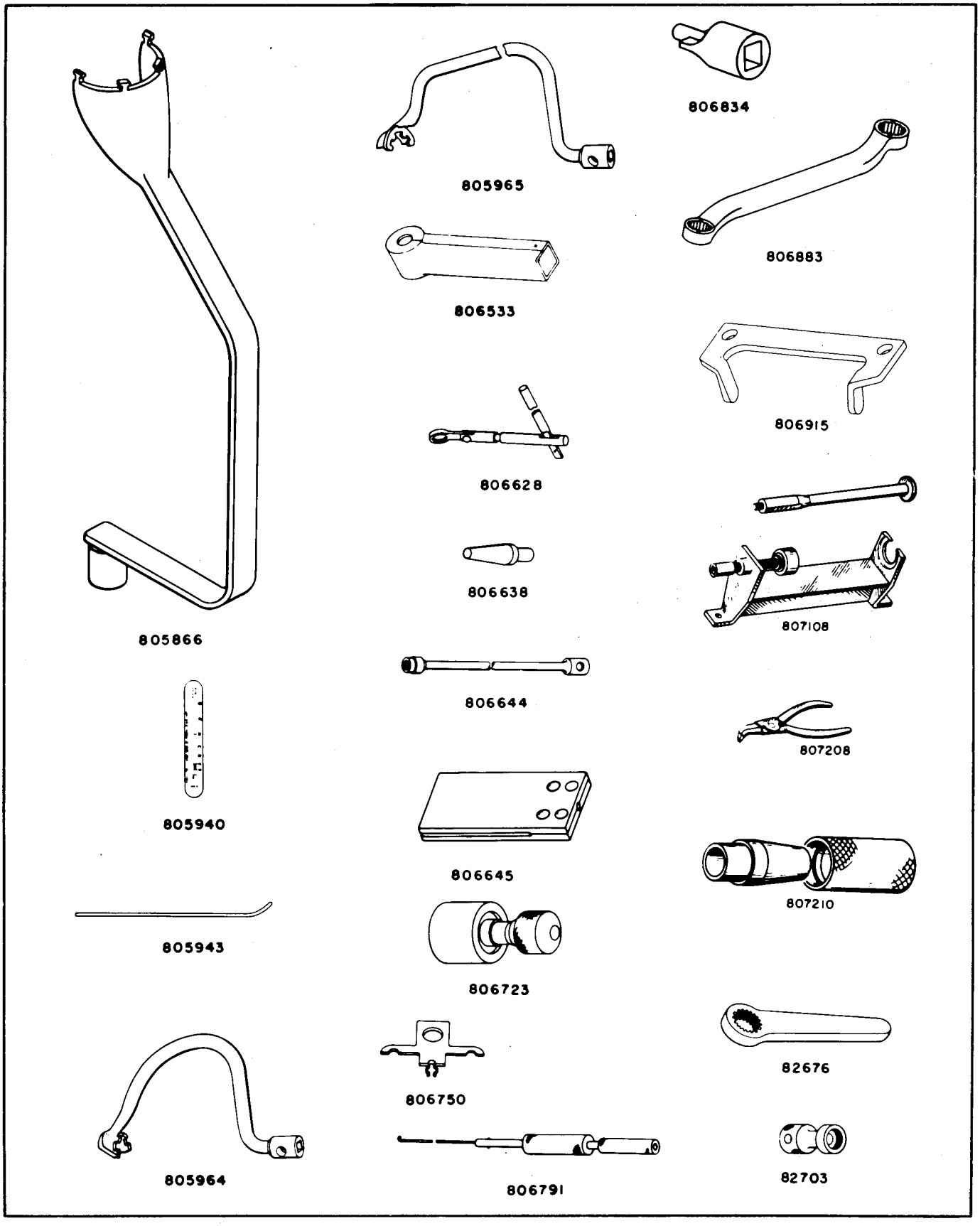

Figure 1-28. Special Engine Tools (Sheet 2 of 3)

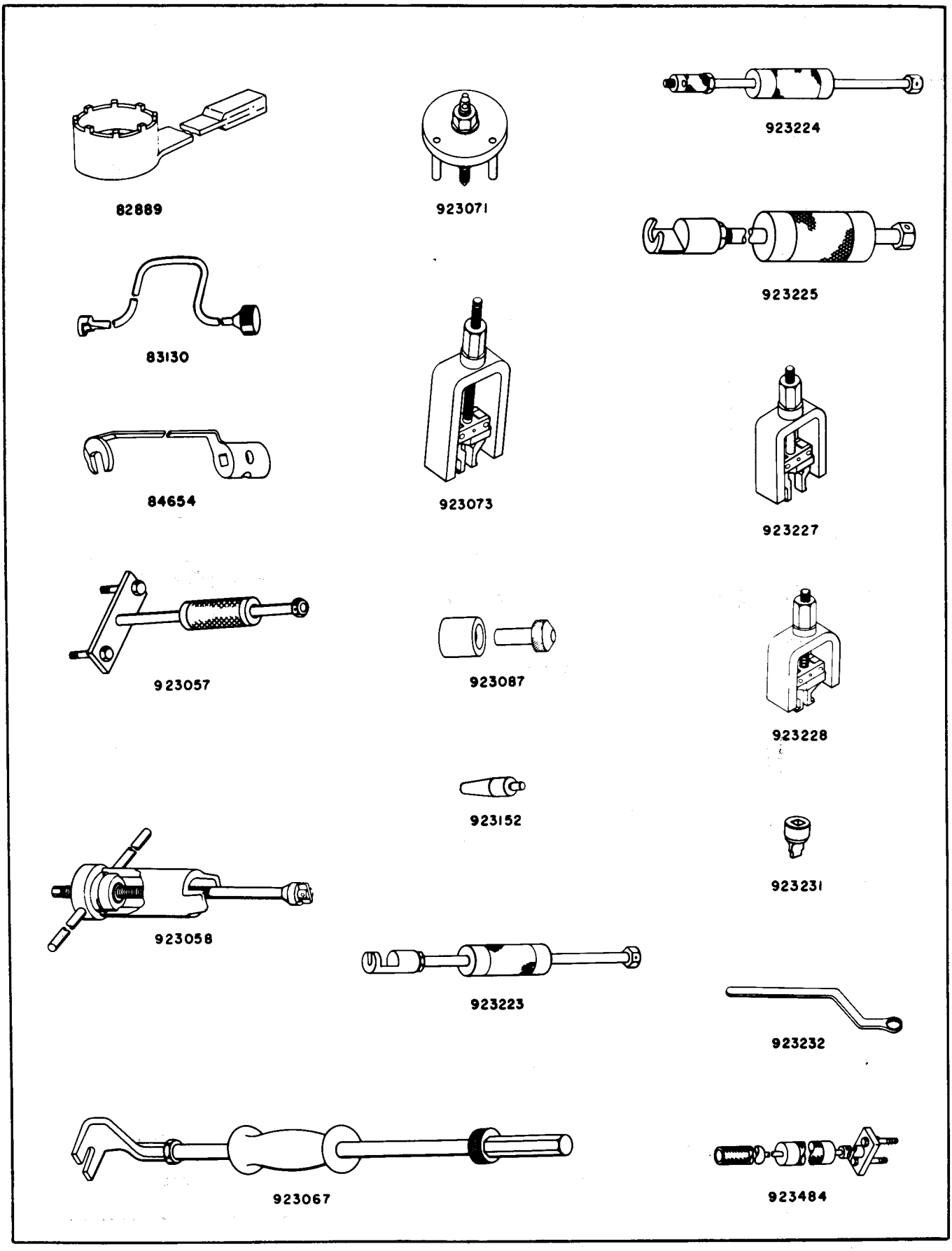

Figure 1-28. Special Engine Tools (Sheet 3 of 3)

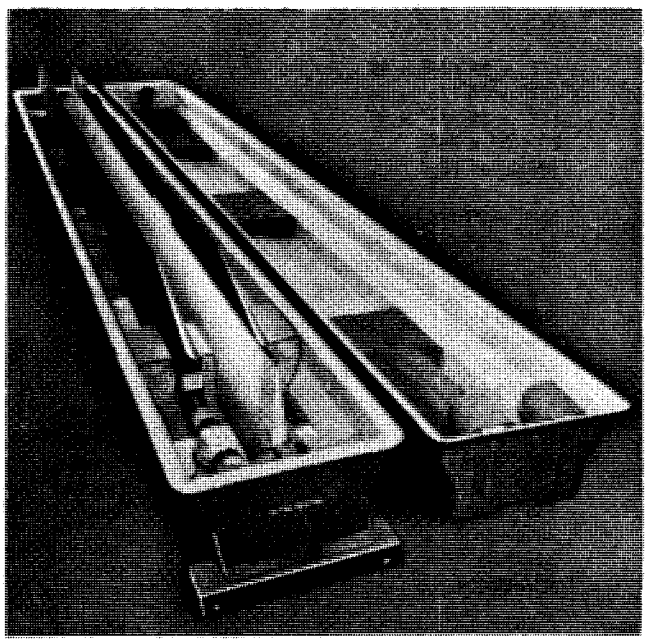

Figure 1-29. Rotor Blade Metal Container

tion for the blades. The blade supports are made of sheet metal and are sponge-rubber lined. The lower section of the support is bolted to the box while the upper section may be removed after removing the four retaining screws. The lid of the container is hinged to the box and, when closed, is held in place by 13 cap screws. To place the blades in the wooden container, proceed as follows:

a. Remove the 13 cap screws and swing open the lid. Separate the two sections of the support by removing the four screws.

b. Clean the blade root ends and wrap them in grease-resistant paper, Spec JAN-B-121, grade A.

c. Place the blades on their leading edges in the blade box. Replace the upper mount sections and secure with four screws. Place padding around the blade tip and root ends to prevent damage in the event of blades shifting.

Note

If wooden blades are to be placed in the container, the spacer blocks and bolts provided in the container should be used between the upper and lower sections of the blade mount to provide adequate blade clearance.

d. Place desiccant, Spec MIL-D-3464, in the container. Lower the lid and tighten the 13 cap screws.

e. If no wooden or metal rotor blade containers are available, a wooden box suitable for storing or shipping of blades may be constructed, using information from figure 1-30 as a guide.

1-101. TRANSMISSION AND CLUTCH PRESERVATION. If a transmission or clutch assembly is to be removed from a helicopter or, while installed in a helicopter, is to be idle for more than 30 days, the unit must be preserved to prevent corrosion.

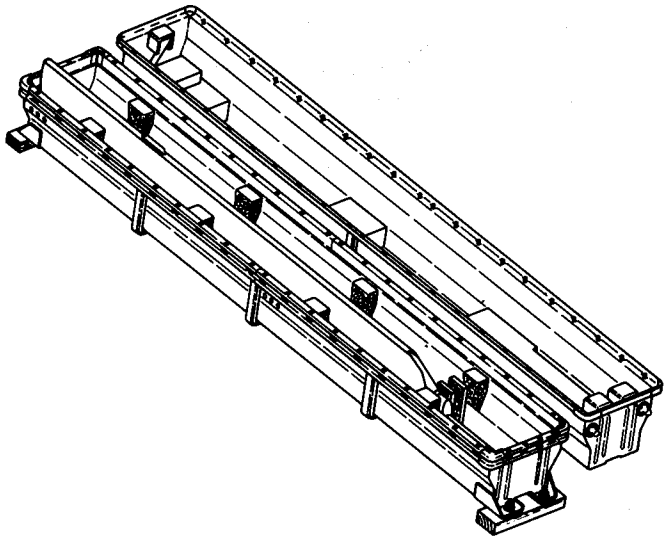

Figure 1-29A. Rotor Blade Metal Container with Spacer Sections Installed

Index No.	Nomenclature	Units per Assembly	Size and Material	
1	Bottom	1		
	Left-hand panel	1	1/2" x 28-1/4" x 96	Plywood
	Center panel	1	1/2" x 28-1/4" x 96	Plywood
	Right-hand panel	1	1/2" x 28-1/4" x 57	Plywood
	Skids	3	2" x 3" x 247"	Fir Wood
	Nails	As reqd	AN301-14-12	
2	Side (forward)	1		
	Left-hand panel	1	1/2" x 25-1/2" x 86"	Plywood
	Center panel	1	1/2" x 25-1/2" x 86"	Plywood
	Right-hand panel	1	1/2" x 25-1/2" x 77"	Plywood
	Angle	1	1/8" x 2" x 2" x 247-1/2"	Steel
	Hex nuts	13	AN315-6	
	Bolts	15	AN6-10A	
	Washers	15	AN970-6	
	Nuts	15	AN365-624	
3	Side (rear)	1		
	Left-hand panel	1	1/2" x 25-1/2" x 86"	Plywood
	Center panel	1	1/2" x 25-1/2" x 86"	Plywood
	Right-hand panel	1	1/2" x 25-1/2" x 77"	Plywood
	Angle	1	1/8" x 2" x 2" x 247-1/2"	Steel
	Bolts	15	AN6-10A	
	Washers	15	AN970-6	
	Nuts	15	AN365-624	
4	Baffles	14		
	Baffle plate	1	1/2" x 11" x 16"	Plywood
	Bottom filler	1	2" x 2" x 11"	Fir Wood
	Side filler	2	2" x 2" x 14"	Fir Wood
	Nails	As reqd	AN301-14-12	
5	Inspection Doors	2		
	Screen frames	2		
	Frames (mitered ends)	4	1/2" x 1" x 14"	Pine Wood
	Screen	1	3/8" mesh x 14" x 14"	Screen
	Outer frame	2		
	Top support	1	1-1/4" x 3" x 16-1/2"	Pine Wood
	Bottom support	1	1-1/4" x 3" x 16-1/2"	Pine Wood
	Side supports	2	1-1/4" x 3" x 14"	Pine Wood
	Stop	2		
	Top legs	2	1" x 2" x 14"	Pine Wood
	Side legs	2	1" x 2" x 14"	Pine Wood
	Nails	As reqd	AN301-14-12	
	Door panel	1	1/2" x 14" x 14"	Plywood-Waterproof
	Hinges	3	Tee type	Steel
	Screws	15	AN550-6-12	
6	Ends	2		
	End panel	1	1/2" x 25-1/2" x 28-1/4"	Plywood
7	Inner corner braces	4	1/8" x 2-1/2" x 2-1/2" x 22-3/4"	Steel
8	Outer corner braces	4	1/8" x 3" x 3" x 25-1/2"	Steel
9	Kick plates	2	1/4" x 20" x 28-1/4"	Steel
	Bolts	3	USAF70-6-50	
	Washers	3	AN970-8	
	Nuts	3	AN365-813	
10	Handles	2	2" x 2" x 28-1/4"	Fir Wood
	Bolts	2	USAF70-6-30	
	Washers	2	AN960-816	
	Nuts	2	AN365-813	
11	Channel braces (welded)	5		
	Side channels	2	3/16" x 2" x 9/16" Flange x 22-1/2"	Steel
	Bottom channels	1	3/16" x 2" x 9/16" Flange x 27-1/4"	Steel
	Bolts	3	USAF70-6-30	
	Washers	3	AN960-816	
	Nuts	3	AN365-813	
	Bolts	2	AN8-10A	
	Washers	2	AN970-8	
	Nuts	2	AN365-820	
	Bolts	2	AN8-12A	
	Washers	2	AN970-8	
	Nuts	2	AN365-820	
12	Blade support assembly (left)	1		
13	Retainer support (welded)	2		
	Bottom channel	1	1/4" x 4" x 1-3/4" Flange x 27-1/4"	Steel
	Side channels	2	1/4" x 4" x 1-3/4" Flange x 6-1/2"	Steel

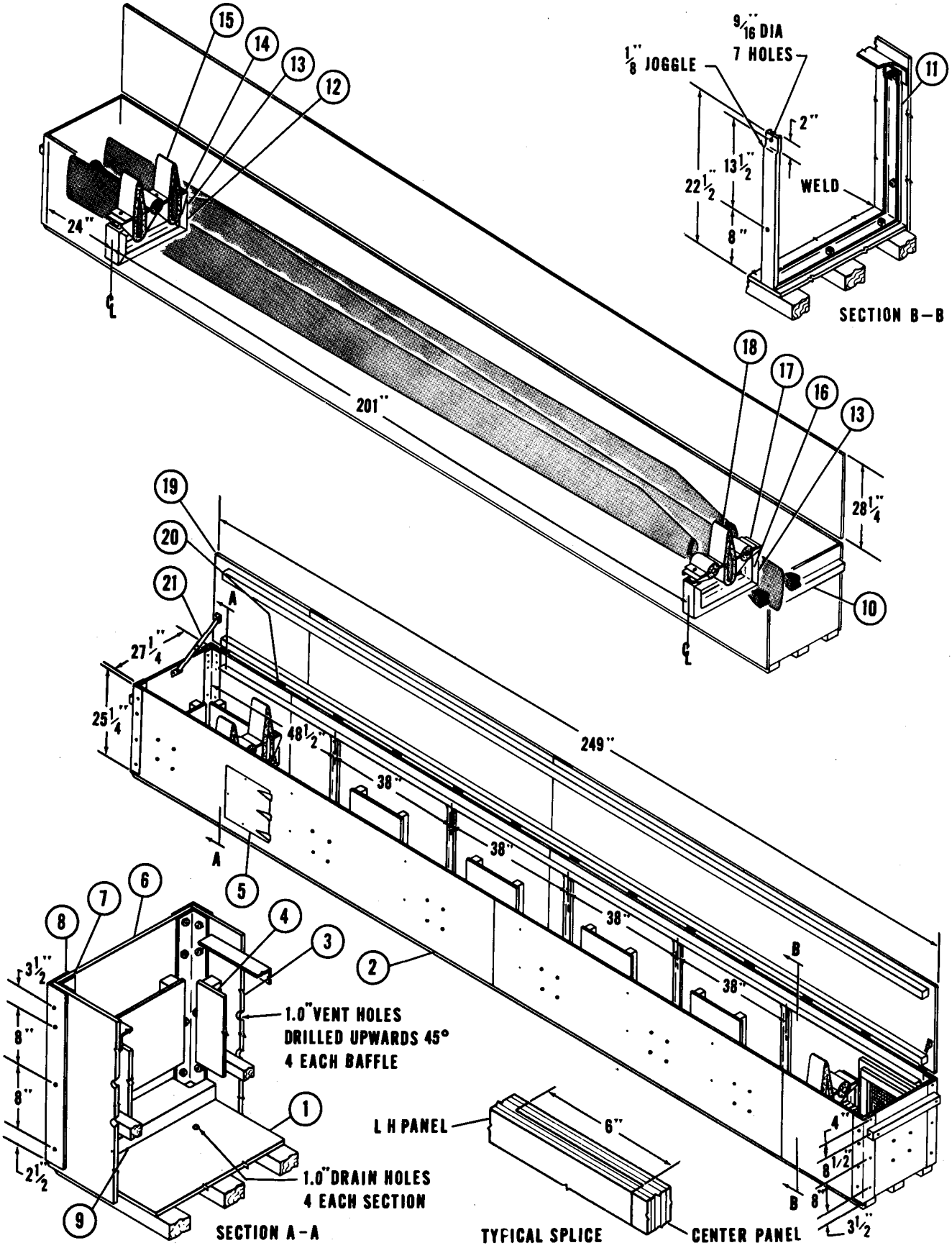

Figure 1-30. Rotor Blade Wooden Container (Sheet 1 of 2)
(Numerical Sequence in the Order of Fabrication)

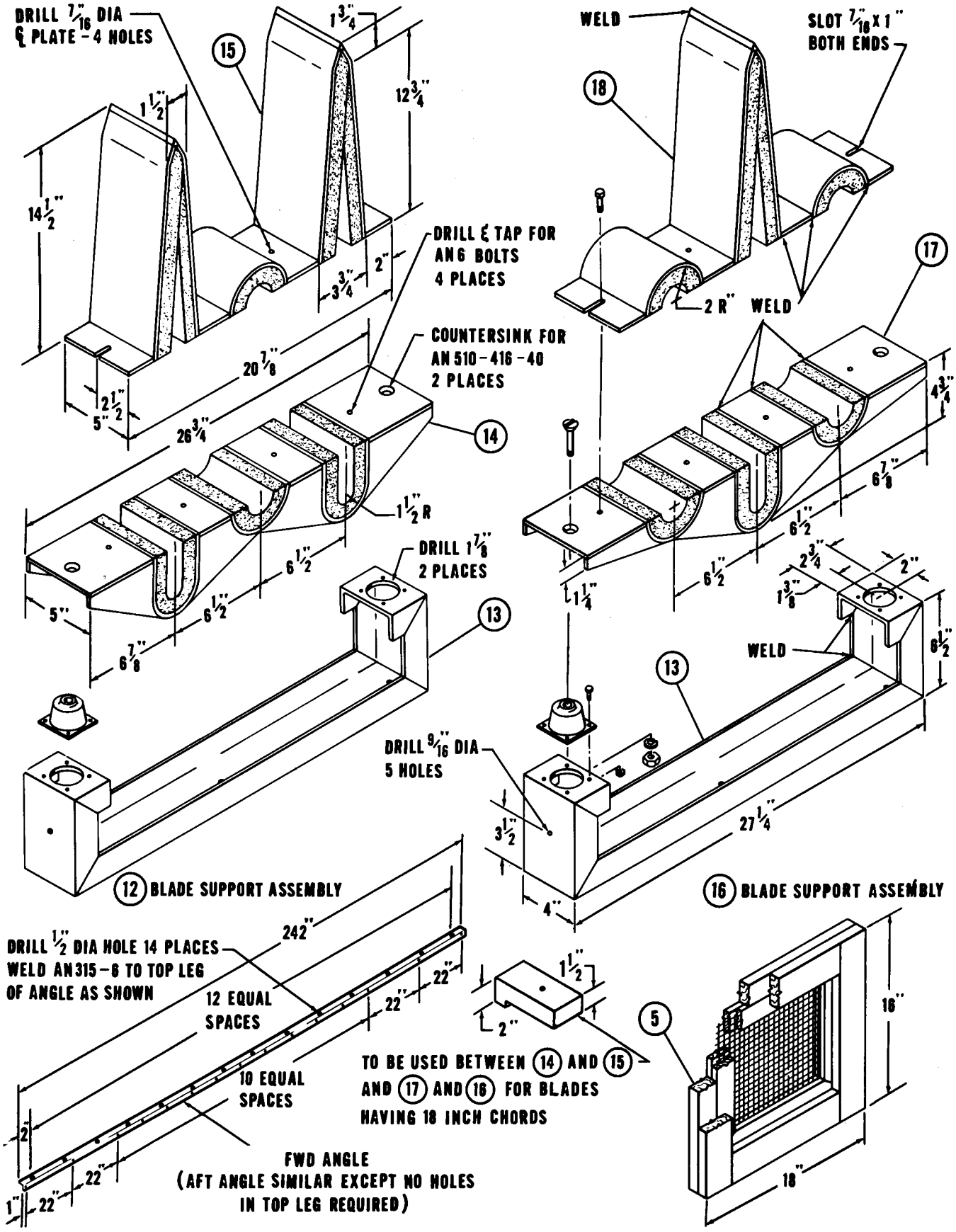

Figure 1-30. Rotor Blade Wooden Container (Sheet 2 of 2)
(Numerical Sequence in the Order of Fabrication)

Index No.	Nomenclature	Units per Assembly	Size and Material	
13	Top channels	2	1/4" x 4" x 1-3/4" Flange x 2-3/4"	Steel
(Cont)	Lord shock mounts (or equivalent)	2	200 x P-6	
	Screws	8	AN520-10-10	
	Washers	8	AN960-10	
	Nuts	8	AN365-1032	
	Bolts	3	USAF70-6-30	
	Washers	3	AN960-816	
	Nuts	3	AN365-813	
	Bolts	2	AN8-10A	
	Washers	2	AN970-8	
	Nuts	2	AN365-820	
14	Lower retainer (welded)	1		
	Top outer plates	2	1/4" x 5" x 5"	Steel
	Top center plates	2	1/4" x 5" x 2-1/2"	Steel
	Side plates	4	1/4" x 5" x 4"	Steel
	Side plates	4	1/4" x 4-3/4" x 4-3/4"	Steel
	Tube end plates	4	1/4" x 4" x 3"	Steel
	Tube halves	3	1/4" x 2" ID x 5"	Steel
	Sponge rubber padding	As reqd		
	Screws	2	AN510-416-40	
	Washers	2	AN960-416	
	Nuts	2	AN365-428	
15	Upper retainer	1		
	Outer plates	2	1/4" x 5" x 2"	Steel
	Inner plates	2	1/4" x 5" x 2-1/4"	Steel
	Tube half	1	1/4" x 2" ID x 5"	Steel
	V-plates	4	1/4" x 5" x 14-1/2"	Steel
	Sponge rubber padding	As reqd		
	Bolts	4	AN6-6A	
	Lockwasher	4	AN935-616	
16	Blade support assembly (right)	1		
17	Lower retainer	1		
	Top outer plates	2	1/4" x 5" x 4-1/2"	Steel
	Top center plates	2	1/4" x 5" x 2-1/4"	Steel
	Side plates	4	1/4" x 6-1/2" x 2"	Steel
	Side plates	4	1/4" x 5-1/2" x 5-1/2"	Steel
	Tube end plates	2	1/4" x 5" x 3"	Steel
	Tube halves	3	1/4" x 2" ID x 5"	Steel
	Sponge rubber padding	As reqd		
	Screws	2	AN510-416-40	
	Washers	2	AN960-416	
	Nuts	2	AN365-428	
18	Upper retainer	1		
	Outer plates	2	1/4" x 5" x 2"	Steel
	Inner plates	2	1/4" x 5" x 2-1/2"	Steel
	Tube halves	2	1/4" x 2" ID x 5"	Steel
	V-plates	2	1/4" x 5" x 14-1/2"	Steel
	Sponge rubber padding	As reqd		
	Bolts	4	AN6-6A	
	Lock washers	4	AN935-616	
19	Cover			
	Left-hand panel	1	1/2" x 28-1/4" x 86"	Plywood
	Center panel	1	1/2" x 28-1/4" x 86"	Plywood
	Right-hand panel	1	1/2" x 28-1/4" x 77"	Plywood
	Beams	2	2" x 2" x 247"	Fir Wood
	Nails	As reqd	AN301-14-12	
20	Hinges	13	Strap type	Steel
	Screws	78	AN550-6-12	
21	Hinge-slide lock	2		
	Screws	6	AN520-10-12	
	Washers	12	AN960-10	
	Nuts	6	AN365-1032	

1-102. PRESERVATION PROCEDURE. To preserve the transmissions and clutch assembly, proceed as follows:

a. Drain all lubricating oil from the transmission and clutch cases.

b. Fill the transmission and clutch cases to the normal level with a corrosion preventive mixture consisting of one part corrosion preventive compound concentrate, Spec MIL-C-6529, and three parts lubricating oil, Spec MIL-L-6082, grade 1065.

c. If the units are installed in a helicopter, start the engine and run for three–five minutes at 2000 rpm. If the units have been removed from the helicopter and a run-in stand is available, operate at no-load for the same period of time. If no run-in stand is available or it is a malfunctioning unit being returned for overhaul, fill the unit with the corrosion preventive mixture described in step b. and try to turn the drive shafts with a strap-wrench several times. Drain all the corrosion preventive mixture from the units and cap all openings on the units removed from the helicopters.

Note

To insure the coating of all internal parts with corrosion preventive mixture in a transmission removed from the helicopter, but not run-in, tilt the transmission in several directions before draining it of the mixture.

d. Thoroughly clean all external parts by wiping with a cleaning solvent conforming to Federal Spec P-S-661.

Note

The following steps apply to transmission assemblies and clutch assemblies which have been removed from the helicopter and are being prepared for storage or shipment to other activities.

e. Thoroughly clean all exposed metal parts, such as shaft splines, with fingerprint remover, Spec MIL-R-15074. Wipe with cleaning solvent to remove any film left by the fingerprint remover. Wipe dry with clean, lint-free cloths.

Note

Extreme care must be exercised in handling the transmission after cleaning to prevent touching of exposed metal parts. Clean, nylon gloves should be worn to assure cleanliness.

f. Brush a light coating of preservative compound, Spec MIL-C-16173A, grade II or MIL-C-11796, class III, on all exposed metal parts, making sure that all surfaces, including inside bushings, are adequately covered.

CAUTION

Do not allow any of the preservative mixture or cleaning solvent to contact the composition rubber inserts in the central transmission and clutch mounting lugs because they will deteriorate the inserts.

g. Cover shaft splines with a soft metal thimble if available, or wrap all exposed metal parts with grease-resistant paper, Spec JAN-B-121, grade A, and secure with waterproof tape.

h. Cushion any parts which may be damaged in handling, such as electrical connections, jets and actuators, by wrapping with aluminum foil conforming to Spec JAN-B-148. A further wrapping of grease-resistant paper secured with waterproof tape may be added if desired.

i. The rubber rainshield found on rotor transmissions should be removed from the rotor shaft and wrapped and sealed in a waterproof, grease-resistant bag conforming to Spec JAN-P-117, and this bag should be taped to the transmission torque plate.

1-103. TRANSMISSION ASSEMBLY AND CLUTCH ASSEMBLY DEPRESERVATION PROCEDURE. To depreserve a transmission assembly or clutch assembly which has been preserved, proceed as follows:

a. Remove all wrappings from the units and wipe off preservative compound from exposed metal surfaces.

b. Drain the transmissions and clutch assembly of all preservative mixture.

c. Fill the transmission assembly and clutch assembly with lubricating oil as described in the Lubrication Chart.

d. Install the transmission in a helicopter or run-in stand and operate at 2000 rpm for not less than 10 minutes.

e. Drain the units and refill with clean lubricating oil.

1-104. TRANSMISSION AND CLUTCH PACKAGING.

1-105. ROTOR TRANSMISSION PACKAGING. (See figures 1-31 and 1-32.) Wooden shipping and storage containers may be constructed as described below. Dimensions and materials for constructing these containers are found on figures 1-31 and 1-32.

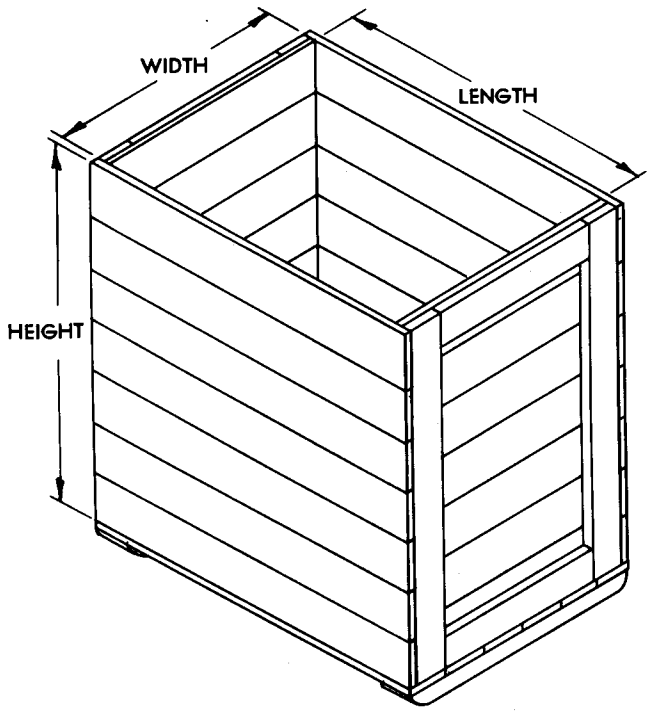

INSIDE DIMENSIONS IN INCHES			
Transmission	Height (inches)	Length (inches)	Width (inches)
Forward	48	43-1/2	31
Aft	48	34	28

Figure 1-31. Rotor Transmission Wooden Shipping Container

a. Use a good grade of one-inch finished lumber and either 8- or 10-D nails. The width of the lumber used is optional, provided that the finished container meets the necessary dimensions. Clinch all nails as they are installed.

b. Construct the two ends to the width and height shown in figure 1-31 for the transmission to be packaged.

c. Cut the boards for the sides and bottom to the proper length, allowing for the inside dimension plus the thickness of the two ends. Allow sufficient width to the bottom to overlap the sides.

d. Nail one side, the bottom and the lowest board of the remaining side to the ends. Use both the vertical and horizontal end boards when nailing. Make and attach 2- by 4-inch skids to the bottom.

e. Cut the additional pieces required for the internal mounting supports as shown in figure 1-32 for the transmission to be packaged. Also cut a corresponding number of boards for the cover as were used in constructing the bottom. The container is now ready for installation of the transmission.

f. Line the inside of the box with grease-resistant paper, Spec JAN-B-121, grade A, allowing sufficient paper to line the side of the box not yet completed.

g. If a forward transmission is to be packaged, nail the thin strip (3) to the thick support (4) to form the bottom supports. If an aft transmission is to be packaged, nail the thin strip (3) to the thick support (2) to form the bottom support.

Note

The thin strips (3) and the thick supports (2 and 4) should be cut to the proper length as specified in figure 1-31.

h. Place the bottom support in the corners of the box as shown in figure 1-32 for the type of transmission being packaged. Nail the supports to the bottom of the box.

i. Place the cross supports (2, for the forward transmission and 4, for the aft transmission) across the bottom supports as shown in figure 1-32. Do not nail the cross supports in place.

j. Lower the transmission slowly into the box. Adjust the cross supports to allow each side of the lower support ring to rest on them. The transmission must be centered when installed in the box.

k. Using a pencil through the support ring bushings, mark the cross supports for drilling of mounting bolt holes.

l. Raise the transmission enough to remove the cross supports. Drill 1/2-inch holes through the supports at the marked locations.

m. Place small felt pads between the cross supports and the transmission support ring and between the support ring and washers. Using 1/2-inch carriage bolts six inches in length, bolt the cross supports to the support ring with the bolt head bearing against the cross support.

n. Lower the transmission until it rests against the bottom supports.

o. Hold the upper supports (1) tightly against the box ends and under the torque plate. Mark the bolt hole locations through the torque plate bushings and drill 1/2-inch holes at each location.

Note

Forward transmission upper supports require two bolt holes which should be centered on the supports. Aft transmission upper supports require four bolt holes which will be close to the ends of the supports.

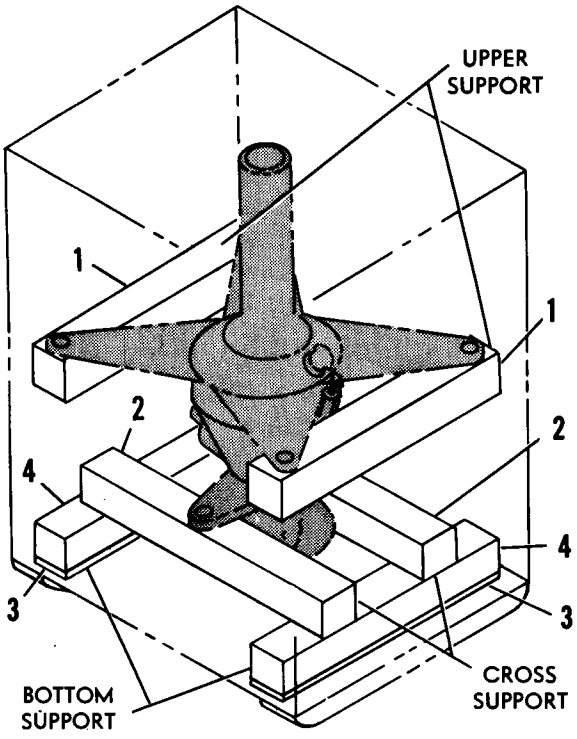

AFT TRANSMISSION

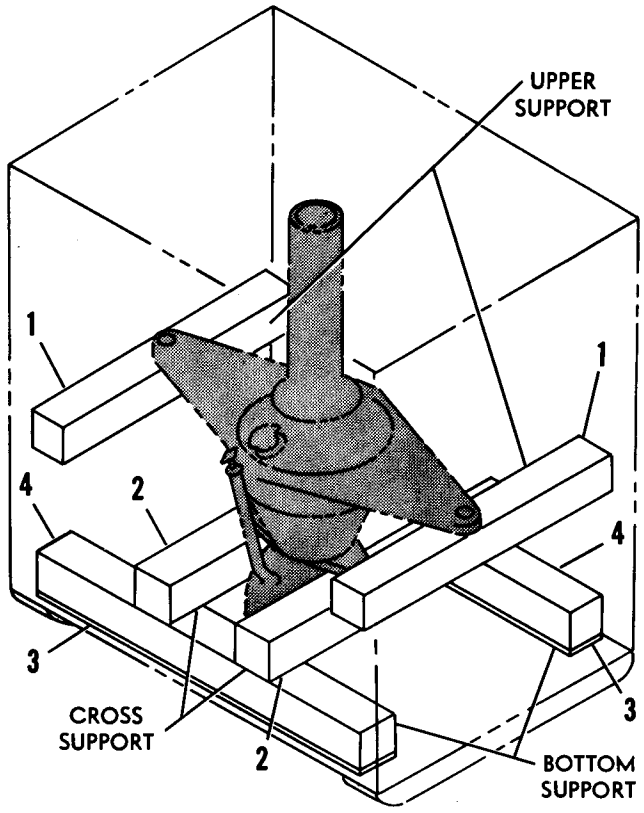

FORWARD TRANSMISSION

p. Place small felt pads between the upper supports and torque plate and between the torque plate and washers. Using 1/2-inch diameter carriage bolts, bolt the upper supports to the torque plate.

q. Nail the remaining side to the box. Complete the sealing of the grease-resistant paper on the sides and ends and nail through the sides and ends to completely fasten all supports.

r. Attach the transmission log book to the inside of the box, place grease-resistant paper across the top, seal and nail the cover to the box.

1-105A. ROTOR TRANSMISSION METAL CONTAINERS. (See figures 1-32A and 1-32B.) To install a rotor transmission in a metal shipping container, proceed as follows:

a. Remove the closure flange nuts and bolts.

b. Attach a hoist to the lifting rings in the container cover and remove the cover.

CAUTION

Before installing the transmission in the container, allow the container to remain open in a dry place for at least 48 hours. This is especially recommended if the container is new or has been recently refinished, since a chemical action caused by zinc chromate primer and/or olive drab paint will result in corrosion of any unpainted AN standard parts or cadmium plated surfaces.

LIST OF MATERIALS

Index No.	No. Pieces	Size (inches)	
		Forward	Aft
1	2	4 x 4 x 30-7/8	4 x 4 x 27-7/8
2	2	4 x 4 x 30-7/8	4 x 4 x 33-7/8
3	2	1 x 4 x 43-3/8	1 x 4 x 27-7/8
4	2	4 x 4 x 43-3/8	4 x 4 x 27-7/8

Figure 1-32. Rotor Transmission Wooden Shipping Container Inner Supports

c. Remove the frame assembly and the two torque plate brace assemblies from the container.

d. Attach the frame assembly to the transmission by securing the lower members of the frame assembly to the support ring of the transmission with the attaching bolts and lock nuts.

e. If a forward transmission is being installed in the container, proceed as follows:

1. Insert the captive bushings into the lower side of the two transmission torque plate mounting holes.
2. Place one of the straps on the top of one of the attaching clips on each transmission torque plate support. Place the other strap on the lower side of the remaining clip. Bolt the straps to the torque plate supports. Bolt the supports to the torque plate by installing a bolt through the straps and captive bushings.
3. Lower the transmission and torque plate supports into the container, aligning holes of the frame assembly and torque plate supports with the holes in the clip angles of the shear mounts.
4. Bolt the torque plate supports and frame assembly to the shear mounts, securing them in place with lock nuts.

f. If an aft transmission is being installed in the container, proceed as follows:

1. Attach one brace strap of the torque plate supports to the torque plate at each mounting hole.

Note

Since the captive bushings are used only for installation of a forward transmission in the container, these bushings should be taped to the torque plate supports.

2. Lower the transmission into the container and place the torque plate supports in position on the frame assembly.
3. Align the holes in the frame assembly and the torque plate supports with the holes in the clip angles of the shear mounts. Bolt the torque plate supports and frame assembly to the shear mounts and secure with lock nuts.
4. Align the holes in the brace straps with the holes in the clips on the torque plate support. The straps should be placed on the upper sides of the clip angles. Install the attaching bolts and lock nuts.

g. Check the bottom of the container to see if the pipe plug has been installed. If not, install the plug from outside the container after coating the hole threads with anti-seize compound, Spec JAN-A-669.

h. Thoroughly brush a coating of light preservative compound, Spec MIL-C-16173, grade II, or MIL-C-11796, class III, an all standard hardware.

i. Install a humidity indicator, AN7511, AN7513, or MS20003, in the humidity indicator holder and securely wire in place.

j. Tape the transmission log book to the transmission.

k. Place three one-pound bags of desiccant, Spec MIL-D-3464, in the wire mesh receptacle inside the container. If no receptacle is provided, tape the bags to the frame assembly.

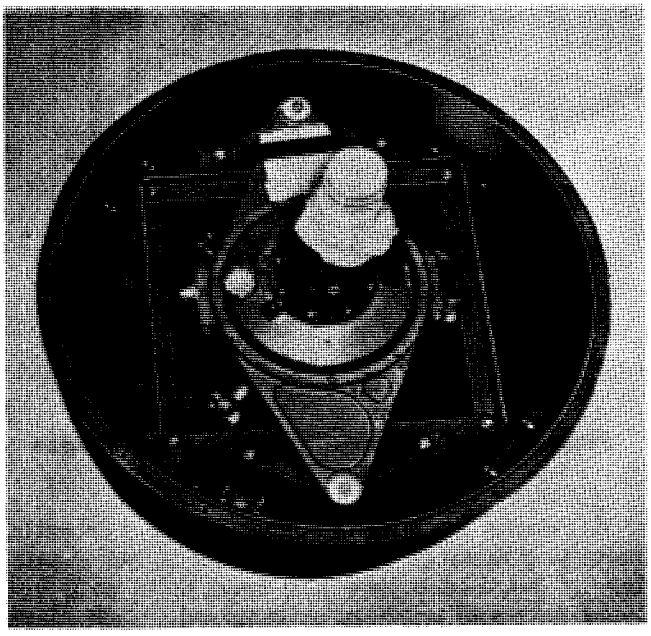

Figure 1-32A. Forward Transmission Metal Shipping Container

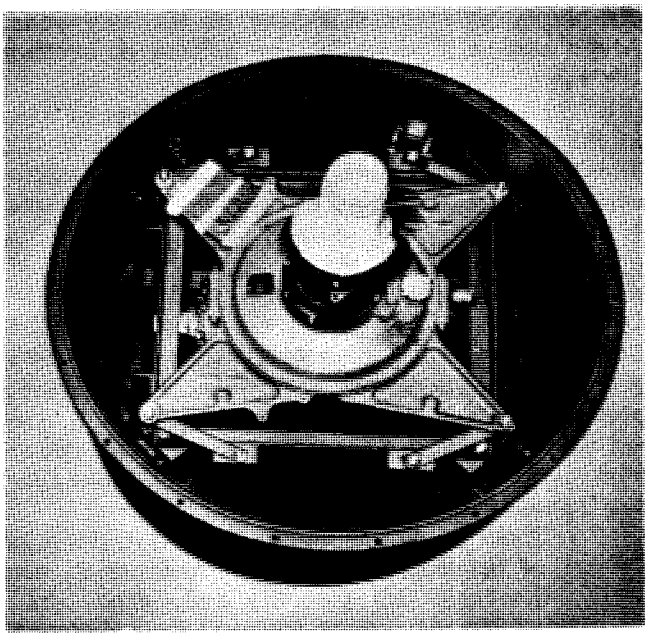

Figure 1-32B. Aft Transmission Metal Shipping Container

l. Install the gasket on the flange of the lower section of the container. Lower the container cover into place, using the dowel pin to align the holes in the cover with the holes in the lower section of the container.

m. Replace the flange closure nuts and bolts. Tighten the nuts progressively, working around the container. Do not completely tighten one nut before proceeding to next nut. When all nuts have been tightened, there should be a complete metal-to-metal contact between flanges of the cover and lower section. Coat closure nuts and bolts with preservative compound, Spec MIL-C-6708.

1-105B. To remove either a forward or an aft transmission from the container, reverse the installation procedure.

1-105C. CENTRAL TRANSMISSION AND CLUTCH PACKAGING.

1-105D, WOODEN CONTAINERS. Wooden containers for the central transmission and clutch units may be made as directed in the following paragraphs.

1-106. CONSTRUCTION. (See figures 1-32C and 1-32D.) Wooden shipping containers may be constructed in the following manner:

a. Use a good grade of one-inch finished lumber and either 8 or 10-D nails. The width of the lumber is optional, providing that the correct box dimensions are maintained. Clinch all nails as they are installed.

b. Construct the two ends to the width and height shown in figure 1-32C.

c. Cut the boards for the sides and bottom to proper length, allowing for the 28-inch inside dimension plus the thickness of the two ends. Allow sufficient width to the bottom to overlap the sides.

d. Nail one side, the bottom, and one or two of the lower boards of the remaining side to the ends. Use both the vertical and horizontal boards when nailing. Make and attach 2 by 4-inch skids to the bottom.

e. Cut additional pieces required for internal mounting supports as shown in figure 1-32D. Cut a corresponding number of boards for the cover as were used in constructing the bottom.

f. If the composition rubber inserts, spacers, and steel bushings, as shown in figure 5-38, are not installed in the mounting lugs, make three phenolic bushing inserts to be used for packaging the transmission as follows:

1. For the two bushings required in the lugs of the main case of the transmission, use 3/4-inch OD phenolic rod; face; drill 0.500, +0.010 or −0.000 inch through the longitudinal axis; turn to 0.735, ±0.005 inch OD; cut off to 1.125, ±0.005 inch long; and deburr.
2. For the one bushing required in the lug of the clutch case, use 3/4-inch OD phenolic rod; face; drill 0.500, +0.010 or −0.000 inch through the longitudinal axis; turn to 0.675, ±0.005 inch OD; cut off to 0.875, ±0.005 inch long; deburr.

1-106A. INSTALLATION. Installation of the central transmission and clutch assembly in the wooden container is accomplished in the following manner:

a. Nail the four vertical members (1, figure 1-32D) in the four corners of the box as shown.

b. Hold the member (3) in position and drill two 9/16-inch holes through the box and members (1) and partially into member (3). Remove member (3) from the box and finish drilling the two holes. Drill a third hole, the same size, midway along its length as shown.

c. Drill two 9/16-inch holes in the horizontal mounting member (4).

d. Fasten blocks (7) to hangers (5 and 6), using two four-penny nails for each block. Drill a 9/16-inch hole through the lower portion of each block and hanger, also drill the top hole in each hanger.

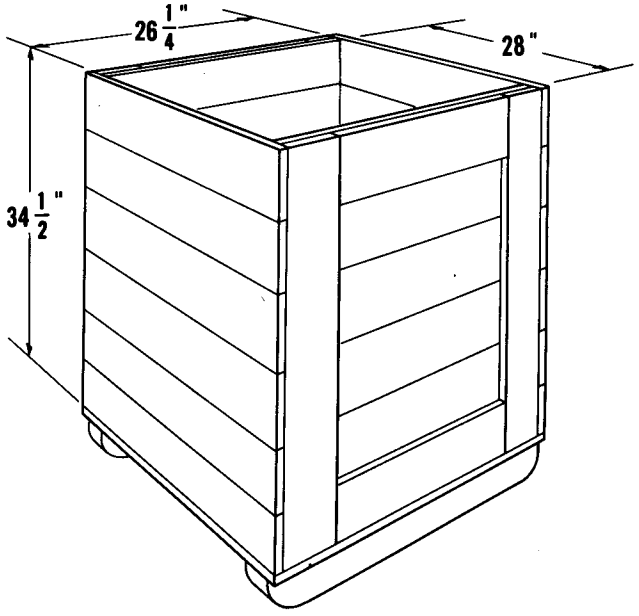

Figure 1-32C. Central Transmission Wooden Shipping Container

e. Secure hangers (5 and 6) to horizontal mounting member (4) using two 1/2-inch diameter by 3-1/2-inch long hex head bolts with hex head nuts and washers as required.

f. With central transmission suspended, enclose transmission within an envelope of flexible waterproof barrier material, Spec MIL-B-131.

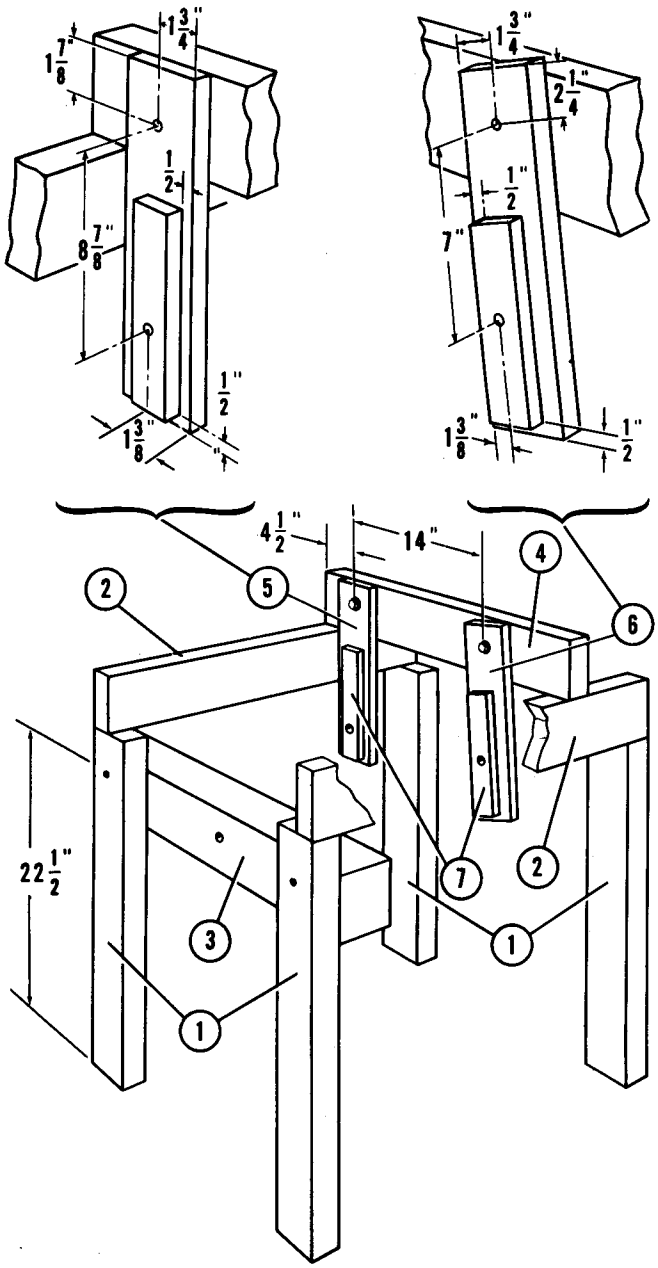

LIST OF MATERIALS				
Index No.	No. of Pieces	Thickness (inches)	Width (inches)	Length (inches)
1	4	2	4	25
2	2	2	4	28
3	1	4	4	26
4	1	2	4	26
5	1	3/4 plywood	3-1/2	13-1/2
6	1	3/4 plywood	3-1/2	13-1/2
7	2	1	2	8

Figure 1-32D. Central Transmission Shipping Container Inner Supports

g. If the composition rubber insert, spacers, and steel bushing are not installed in the clutch case mounting lug, insert a phenolic bushing in the mounting lug. Install a 1/2-inch diameter by 6-inch long carriage bolt through the centrally located hole in the crossmember (3, figure 1-32D). Bottom the head of the bolt in the crossmember. Fasten the crossmember (3) to the transmission by passing the protruding end of the bolt through the waterproof barrier envelope and the clutch case mounting lug. If the steel bushing is installed in the mounting lug, install spacers over the bushing on both sides of the mounting lug to prevent damage to the bushing when tightening the bolt. Secure the crossmember in position, using flat washers as required, one lock washer, and nut.

h. If the composition rubber inserts, spacers, and steel bushings are not installed in the two main case mounting lugs, insert phenolic bushings in the mounting lugs. Install 1/2-inch diameter by 3-1/2-inch long hex head bolt through each mounting lug and the waterproof barrier envelope. Fasten the assembled horizontal mounting member to the transmission, with the blocks (7, figure 1-32D) facing the transmission mounting lugs, by inserting the protruding ends of the bolts through the holes in the blocks (7) and hangers (5 and 6). If the steel bushings are installed in the mounting lugs, install spacers over the bushings on both sides of the mounting lugs to prevent damage to the bushings when tightening the bolts. Secure the hangers to the transmission with flat washers as required, lock washers, and nuts.

CAUTION

Make certain that either the composition rubber inserts with the steel bushings or the phenolic bushings are installed in the mounting lugs of the transmission. Failure to install the bushings will result in serious damage to the transmission case during shipment.

i. Lower the transmission into the box and position in place by passing two carriage bolts through the box, vertical members (1), and the end holes of member (3). Use washers, lock washers, and nuts. Do not tighten the nuts at this time.

j. Place the two horizontal members (2) in position so that an end of each member is supported by a vertical member (1) and the ends of member (4) are supported by members (2). Tighten the nuts on the two carriage bolts passing through the ends of member (3).

k. Secure horizontal mounting members (3) and mounting member (4) by nailing through

the box and into the ends of the members. Use 16-D coated nails, two at each end.

l. Insert two pounds of desiccant, Spec MIL-D-3464, and a humidity indicator, AN7511 or AN7513, into the waterproof, barrier material envelope. Heat-seal the envelope after removing 80 per cent of the air from the envelope.

m. Attach the transmission log book to the inside of the box and nail the cover in place.

1-106B. STORAGE.

1-106C. The central transmission and clutch assembly should be stored in a cool dry place to prevent deterioration of the composition rubber inserts in the mounting lugs.

1-106D. METAL CONTAINERS.

1-106E. INSTALLATION. Installation of the central transmission and clutch assembly in the metal shipping container, as shown in figure 1-32E, may be accomplished in the following manner:

a. Remove the closure flange nuts and bolts, and remove the cover from the container by using the lifting rings on the cover.

Note

To minimize corrosion, allow the container to remain open in a dry place for at least 24 hours. If the container has been repainted, allow it to remain open for a minimum of 48 hours.

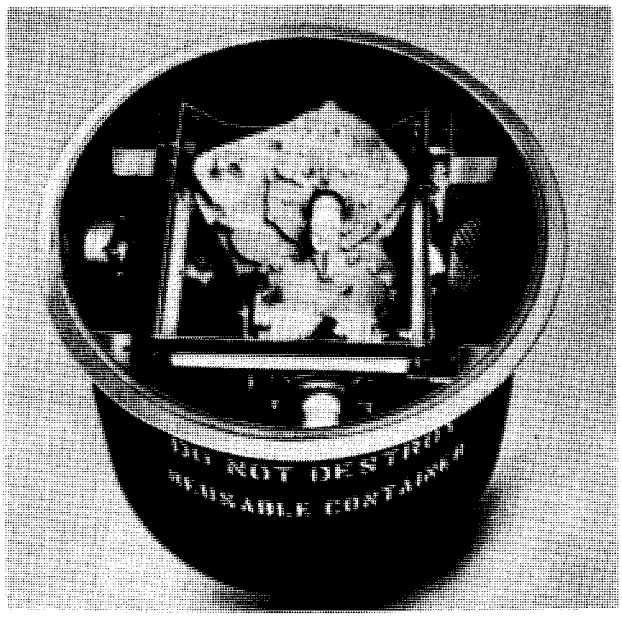

Figure 1-32E. Central Transmission Metal Shipping Container

b. Remove the mounting frame assembly from the container by removing the attaching nuts and bolts which attach the frame assembly to the clip angles of the shear mounts.

c. Loosen one nut and bolt which secures the cross support to the frame assembly and remove the other nut and bolt. This will allow the cross support to swing down, thus allowing the frame assembly to be installed on the transmission without removing the transmission from the hoist.

CAUTION

Make certain that the composition rubber inserts, spacers, and steel bushings are installed in the mounting lugs of the transmission. If these parts are not available, phenolic bushings may be made and installed as outlined in the wooden container paragraphs. Failure to install bushings will result in serious damage to the transmission case during shipment.

d. Attach the mounting frame assembly to the transmission by installing a 3/8-24 bolt through the frame assembly and clutch case mounting lug; and install 1/2-20 bolts through the frame assembly attaching brackets and the transmission case mounting lugs. The captive bushings, which are attached to the frame assembly, must be installed with one on either side of and against each mounting lug. Use lock nuts to fasten the frame assembly to the transmission.

Note

If the frame assembly fits too tightly on the transmission to allow insertion of the captive bushings, loosen the transmission lug attaching brackets on the frame assembly; insert the captive bushings, tighten the bolts in the lugs, and retighten the bolts which fasten the attaching brackets to the frame assembly.

e. Fasten the cross support to the frame assembly, and tighten the nuts and bolts.

f. Lower the transmission, with the mounting frame assembly attached, into the container, and attach the frame assembly to the clip angles of the shear mounts with bolts and lock nuts.

g. Thoroughly brush a coating of light preservative compound, Spec MIL-C-16173, grade II, or MIL-C-11796, class III, on all standard hardware.

h. Install a humidity indicator, AN7511, AN-7513, or MS20003, in the humidity indicator holder, and securely wire it in place.

i. Install three 1-pound bags of desiccant, Spec MIL-D-3464, in the wire mesh receptacle. If no receptacle is provided, tape the bags to the frame assembly.

j. Tape the transmission log book to the transmission.

k. Lower the cover onto the container, using the dowel pin for alignment. Make certain that the gasket is properly seated prior to lowering the cover.

l. Replace the closure flange nuts and bolts. Tighten the nuts progressively, working around the container. Do not completely tighten one nut before proceeding to the next nut. When the closure assembly is complete, a metal-to-metal contact must be obtained between the closure flanges. Coat the nuts and bolts with a preservative compound conforming to Spec MIL-C-16173, grade I.

1-106F. REMOVAL. Removal of the central transmission and clutch assembly from the metal shipping container may be accomplished in the following manner:

a. Remove the closure flange nuts and bolts, and remove the cover from the container, using the lifting rings on the cover.

b. Remove the nuts and bolts which attach the mounting frame assembly to the clip angles of the shear mounts.

c. Lift the transmission, with the mounting frame assembly attached, from the container.

d. Loosen one nut and bolt which secures the cross support to the frame assembly, and remove the other nut and bolt. This will allow the cross support to swing down, thus allowing the frame assembly to be removed from the transmission without removing the transmission from the hoist.

e. Remove the nuts and bolts which attach the frame assembly and captive bushings to the transmission.

f. Remove the frame assembly from the transmission, reassemble the cross support to the frame assembly, and reinstall the frame assembly in the container.

g. Replace the cover on the container.

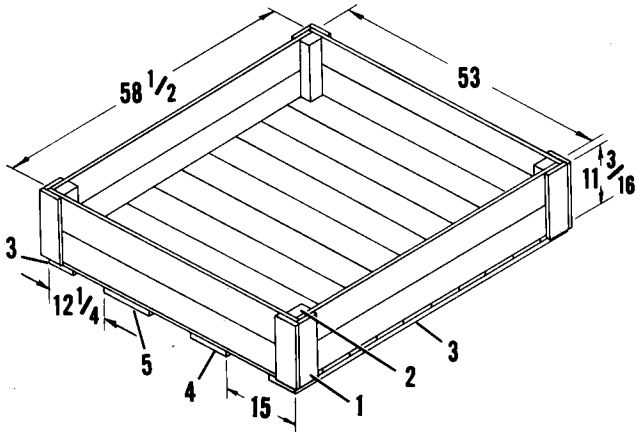

LIST OF MATERIALS

Index No.	No. Pieces	Thickness (inches)	Width (inches)	Length (inches)
1	8	1	4	12-3/16
2	4	2	3	12-3/6
3	5	1	6	width of bottom
4	1	1	8	width of bottom
5	1	1	10	width of bottom

Figure 1-33. Rotor Hub Wooden Shipping Container

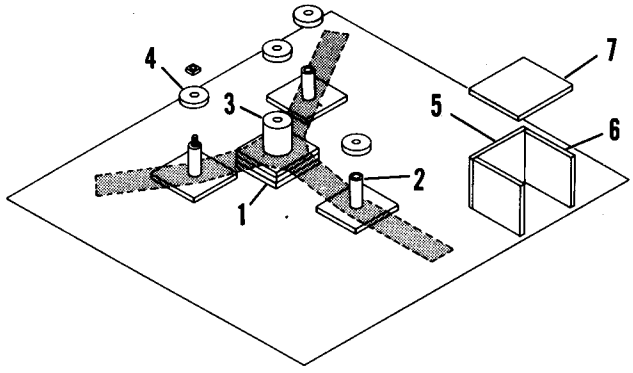

LIST OF MATERIALS

Index No.	No. Pieces	Material	Thickness (inches)	Width (inches)	Length (inches)
1	6	Plywood	1	8	8
2	3	Cylindrical	1	1-7/8 dia	4-1/2
3	1	Cylindrical	1	4-1/4 dia	4-1/2
4	4	Plywood	1	5 dia	
5	1	Finished Lumber	1	8	10
6	2	Finished Lumber	1	8	9
7	1	Finished Lumber	1	10	10

Figure 1-34. Rotor Hub Wooden Shipping Container Inner Supports

1-107. ROTOR HUB PRESERVATION. To preserve the rotor hub assembly for storage or shipment, proceed as follows:

a. Remove the blade attaching taper pins from the outboard end of each pitch bearing housing, and remove the cap assembly, collar and spacer from the hub.

b. Thoroughly clean all external parts by wiping with a cleaning solvent conforming to Federal Spec P-S-661. Wipe dry with clean, lint-free cloths.

c. Wipe all bare metal parts with fingerprint remover, Spec MIL-R-15074. Wipe with cleaning solvent to remove any film left by the fingerprint remover. Wipe dry with clean, lint-free cloths.

d. Brush a light coating of preservative compound, Spec AN-C-124, type II, on all bare metal parts, making sure that all surfaces are adequately covered.

CAUTION

All bearings must be purged with grease, Spec MIL-G-3278, to prevent corrosion within the bearings.

e. Wrap the outboard end of each pitch bearing housing and the end of each pitch arm assembly with grease-resistant paper, Spec JAN-B-121, grade A, and secure with waterproof tape.

f. Wrap the taper pins, cap assembly, collar and spacer in padding to prevent damage during shipment. Overwrap with grease-resistant paper, Spec JAN-B-121, grade A, and secure with a waterproof tape.

1-108. ROTOR HUB PACKAGING.

1-108A. WOODEN CONTAINERS. (See figures 1-33 and 1-34.) Wooden shipping and storage containers for the rotor hub assembly may be constructed as described below. Dimensions and materials for constructing these containers are found on figures 1-33 and 1-34.

a. Use a good grade of one-inch finished lumber and either 8- or 10-D nails. The width of the lumber is optional, providing that the correct box dimensions are maintained. Clinch all nails as they are installed.

b. Cut the boards for each end to a length of 58-1/2 inches and to obtain an over-all height of 11-3/16 inches.

c. Cut boards for each side, allowing for the 53-inch inside dimension plus the thickness of the end boards and to obtain an over-all height of 11-3/16 inches.

d. Cut boards for the top and bottom, allowing for the 53-inch inside dimension plus the thickness of the two end boards. Allow sufficient width to overlap the sides.

e. Nail the two sides and bottom to the ends.

f. Cut additional pieces for bracing as shown on figure 1-33.

g. Nail two of the bracing pieces (3) to the bottom, one across each end. Nail bracing piece (4) across the bottom, 15 inches from one end. Nail bracing piece (5) across the bottom 12-1/4 inches from the other end.

h. Nail the four inner corner braces (2) in the box. Nail the eight outer corner braces to the sides as shown in figure 1-33.

i. Construct the cover, using the pieces previously cut and the three bracing strips remaining. Nail one bracing strip across each end of the cover and one across the center.

j. Cut the additional pieces required for internal mounting as shown in figure 1-34. The container is now ready for the rotor hub.

k. Slowly lower the hub into the box with the center of the hub and the center of two of the vertical pins over the one by ten board. Make certain that the centers do not fall between the boards in the bottom. The remaining vertical pin should lie over the one by eight board. Mark the bottom boards with a pencil through each of the holes.

l. Remove the hub assembly and drill 1/2 inch holes through the points marked.

m. Line the inside of the box and cover with grease-resistant paper, Spec JAN-B-121, grade A. Punch holes through the paper at the mounting points. Insert 1/2 inch carriage bolts 12 inches in length through each of the mounting holes.

n. Nail boards (5 and 6) near the corner of the box as shown to form a small compartment. Install the package containing the taper pins, cap assembly, collar and spacer in this compartment; pad sufficiently to prevent shifting of the package and nail on the cover (7).

o. Apply dip-coating compound, Spec JAN-P-115, to the paper at each mounting bolt and seal all paper joints.

p. Place three of the plywood blocks (1, figure 1-34) over the mounting bolt for the hub and one over each of the vertical pin mounting bolts. Place a felt pad over each of the bolts.

q. Place cylindrical blocks (2 and 3, figure 1-34) in the hub and vertical pin holes. Lower the hub into the box so that the bolts pass through the holes in the cylindrical blocks.

r. Place a felt pad and a plywood circle (4, figure 1-34) over each of the carriage bolts.

s. Fasten the rotor hub in the box, using large washers next to the plywood circles and lock washers under each nut.

t. Attach the log to the inside of the box and nail on the cover.

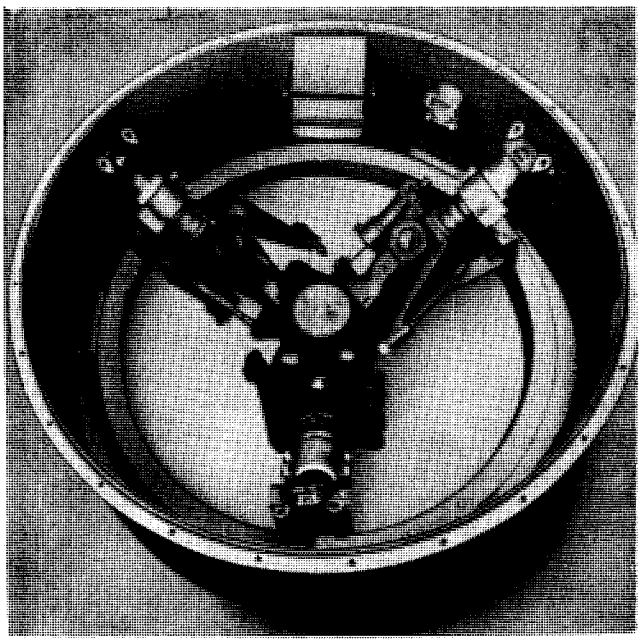

Figure 1-35. Rotor Hub Metal Shipping Container

1-108B. METAL CONTAINERS.

1-108C. INSTALLATION. Installation of the rotor hub assembly in the metal shipping container, as shown in figure 1-35, may be accomplished in the following manner:

a. Remove the closure flange nuts and bolts, and remove the cover from the container by using the lifting rings on the cover.

Note

To minimize corrosion, allow the container to remain open in a dry place for at least 24 hours. If the container has been repainted, allow it to remain open for a minimum of 48 hours.

b. Remove the three upper clamp assemblies from the three lower clamp assemblies, and remove the metal cover plate and fiber cover plate from the hub attaching point.

c. Lower the rotor hub assembly in the container so that the hub is guided over the splined washer and rests on the cushion, making certain that the pitch arms are properly supported by the lower clamp assemblies.

d. Place the fiber cover plate and then the metal cover plate over the hub and fasten the plates in place, using a lock nut.

e. Place the upper clamp assemblies over the pitch arms and fasten them in place, using bolts and lock nuts.

f. Thoroughly brush a coating of light preservative compound, Spec MIL-C-16173, grade II, or MIL-C-11796, class III, on all standard hardware.

g. Thoroughly wrap the rotor hub hardware, such as the cap assembly, spacer, taper pins, and collar, in grease resistant paper, Spec JAN-B-121, grade A, and place them in the small box provided, packing sufficiently to make them tight.

h. Thoroughly wrap the bare metal parts of the hub, such as the ends of the pitch housings, the damper piston rods, and the hub with grease resistant paper, Spec JAN-B-121, grade A, and secure the paper with waterproof tape.

i. Install a humidity indicator, AN7511, AN-7513, or MS20003, in the humidity indicator holder and securely wire in place.

j. Install four 1-pound bags of desiccant, Spec MIL-D-3464, in the wire mesh receptacle. If no receptacle is provided, tape the bags to the frame assembly.

k. Tape the rotor hub log book on the rotor hub.

l. Lower the cover onto the container, using the dowel pin for alignment. Make certain that the gasket is properly seated prior to lowering the cover.

m. Replace the closure flange nuts and bolts. Tighten the nuts progressively, working around the container. Do not completely tighten one nut before proceeding to the next nut. When the closure assembly is complete, a metal-to-metal contact must be obtained between the closure flanges. Coat the nuts and bolts with a preservative compound conforming to Spec MIL-C-16173, grade I.

1-108D. REMOVAL. Removal of the rotor hub assembly from the metal shipping container may be accomplished in the following manner:

a. Remove the closure flange nuts and bolts, and remove the cover from the container, using the lifting rings on the cover.

b. Remove the metal cover plate and the fiber cover plate from the hub.

c. Remove the upper clamp assemblies from the pitch arms.

d. Lift the rotor hub from the container.

e. Remove the rotor hub hardware from the parts box.

f. Replace the upper clamps and the cover plates, and replace the cover on the container.

1-109. ENGINE AND CARBURETOR PRESERVATION. Whenever the engine has been idle for more than 48 hours, it must be pre-oiled as outlined in Section V. Whenever the engine is to be idle for 12 or more days, it must be preserved in accordance with Spec MIL-E-6059A. When preserving the engine, preservation oil conforming to Spec MIL-C-6529A, type II must be used.

CAUTION

Engine operation is not allowed while the engine is preserved with preservation oil, Spec MIL-C-6529A.

One pound of dehydrating agent, Spec AN-D-6, grade A, type V, must be placed in the carburetor air duct. This may be inserted through the alternate air door of the ducting.

CAUTION

Tie the bag of dehydrating agent to prevent its loss into the carburetor. Place a tag or marker on the ducting to insure removal of the agent before starting the engine.

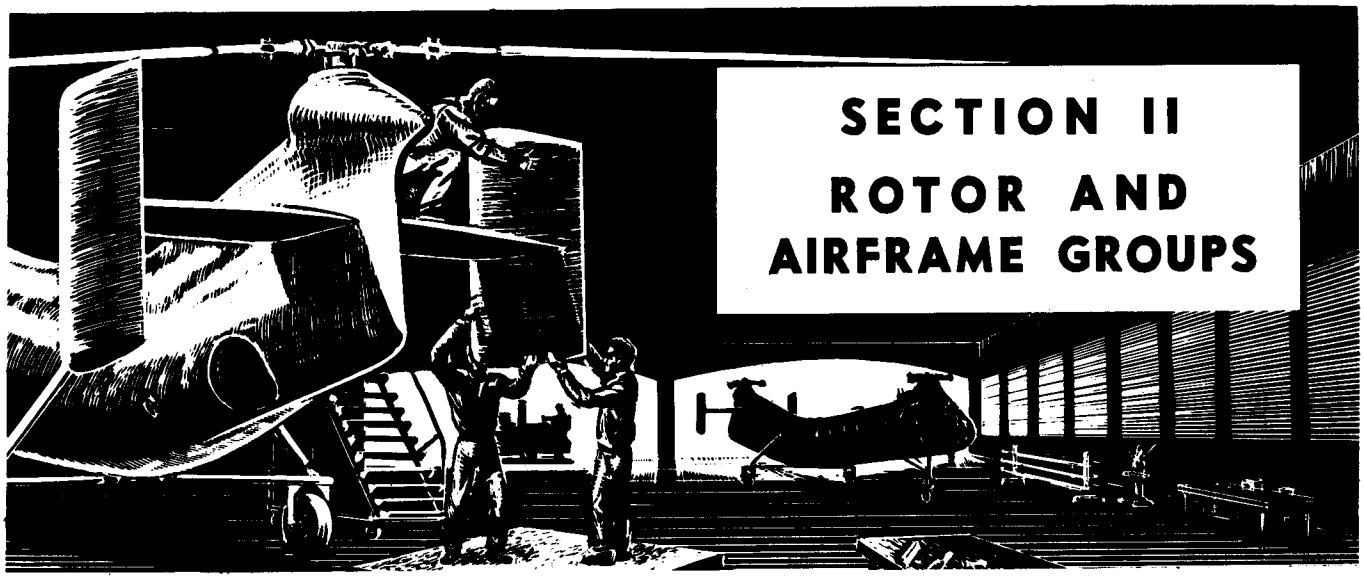

SECTION II
ROTOR AND AIRFRAME GROUPS

CONTENTS

Par.		Page
2-1.	**Troubleshooting**	40
2-5.	**Rotor Group**	41
2-6.	Wooden Rotor Blades	41
2-14.	Metal Rotor Blades	44
2-21.	Rotor Hub Assembly	44B
2-26.	Blade Lag Damper	46A
2-30.	Rainshield	48
2-34.	Rotor Control Assembly	49
2-50.	**Flight Controls**	54
2-53.	Cockpit Controls	54A
2-55.	Cyclic Sticks	54A
2-61.	Collective Pitch Levers	57
2-71.	Directional Controls	64
2-78.	Centering Springs and Magnetic Brakes	67
2-86.	Longitudinal Stick Positioner	69
2-90.	Hydraulic Flight Controls	69
2-92.	Lower Differential Flight Controls	69
2-104.	Upper Flight Controls	73
2-116.	Bungees	77
2-117.	Longitudinal Bungee	77
2-123.	Collective Pitch Bungee	79
2-131.	**Flight Controls Rigging Procedure**	81
2-133.	Locking Out the Controls	81
2-137.	Rigging the Stick Positioner	82
2-138.	Rigging Directional Pedals	82
2-139.	Rigging Lateral Cyclic Controls	82
2-140.	Rigging Longitudinal Cyclic Controls	83
2-141.	Rigging Collective Pitch Control	83
2-142.	Rigging Upper Controls	84
2-143.	Bungee Adjustment	85
2-146.	Rigging Centering Springs	88
2-150.	Rigging Control Cables	89
2-153.	Setting Limit Stops	89
2-159.	Control Motion Check	90
2-165.	Control Interference Check	90
2-167.	Control Clearance Check	92
2-169.	Ground and Flight Check Procedure	92
2-170.	Rigging Auto-Pilot Controls—H-21B	92
2-172.	Servo Motor Adjustments	92
2-173.	**Fuselage**	95
2-175.	Cabin and Rescue Doors	95
2-178A.	Rigging Main and Rescue Door Release Mechanisms	95
2-179.	Engine Hatch Doors	96A
2-183.	Engine Hatch Keel Assembly	96A
2-187.	Air Exit Doors	97
2-191.	Nose Enclosure	97
2-195.	Cockpit Emergency Exits	98
2-199.	Cabin Windows	98
2-203.	Cabin Emergency Exits	100
2-205.	Cleaning Transparent Plastic	100
2-208.	Cabin Floor	100
2-210A.	**Fuselage Transportability**	102C
2-210C.	Transporting Assembled Fuselage via C-124 Aircraft	102C
2-210K.	Transporting Fuselage Sections via C-124 Aircraft	102E
2-211.	**Tail Surfaces**	104J
2-213.	Vertical Fins	106
2-217.	Horizontal Stabilizer	106
2-221.	**Fuselage Equipment**	106
2-222.	Seats—Pilot and Co-Pilot	106
2-227.	Troop Seats and Litters	108A
2-240.	Safety Belts	110
2-244.	Blackout Curtains	110
2-248.	Cockpit Antiglare Curtain	111
2-250.	Map and Data Cases	111
2-252.	Cabin Insulation	111
2-254.	Relief Tubes	111
2-256.	Emergency Equipment	111
2-261.	Fly-Away Equipment	112
2-262.	External Cargo Sling	112
2-268.	**Alighting Gear**	115
2-269.	Main Alighting Gear—YH-21	115
2-274.	Nose Alighting Gear—YH-21	118
2-279.	Main Alighting Gear—H-21A, H-21B, H-21C	121
2-284.	Nose Alighting Gear—H-21A, H-21B, H-21C	122
2-289.	Flotation Equipment	123

2-1. TROUBLESHOOTING.

2-2. DESCRIPTION. The following troubles are those peculiar to helicopters in general and are presented at the beginning of this section to provide ready reference for maintenance personnel. Troubleshooting common only to component systems or units is presented with the paragraphs covering each system or unit.

2-3. FLIGHT VIBRATION. Flight vibrations can be caused by any of a large number of items. The following are a set of tabulated procedures which can be tried in order to provide a smooth flying helicopter. These procedures are grouped under three basic phases so that the maintenance organization concerned can take such action as is possible with the equipment and facilities available. The three phases are:

Phase One. Those checks requiring no disassembly of the helicopter's components.

Phase Two. Those "fixes" requiring disassembly of some components.

Phase Three. Those "fixes" which require replacement of some components.

Any maintenance organization which is able to carry out phase three, should first carry out phases one and two.

a. Phase One—No Disassembly.
   1. Make certain blades are clean, polished, and in no way damaged.
   2. Track blades. See Blade Tracking, Section I.
   3. With helicopter in hangar and blades supported at approximately the spanwise cg, with exactly zero degrees flap, zero degrees lead or lag, check for proper blade incidence. See Adjustment —Blade Angle, this section.
   4. Check all swash plate connections for looseness (0.002 inch maximum).
   5. Check pitch linkage for looseness (0.002 inch maximum).
   6. Check cable tensions. See table of cable tensions in Flight Controls Rigging Procedure.
   7. Check engine vibration isolator bolt torque values.
   8. Make certain that the same type oil has been used in servicing each pitch bearing housing.
   9. Check tightness of horizontal stabilizer and vertical fin and all transmission attachment points.
   10. Check tightness of bolts which attach the pilot's collective pitch lever to the torque tube. The heads of these bolts are inside the torque tube. Therefore, it is necessary to grip the threaded end of the bolt when tightening the nut.
   11. Perform Lag Damper Check as directed in paragraph 2-29A.

b. Phase Two—Partial Disassembly.
   1. Check blade incidence. See Adjustment —Blade Angle, this section.
   2. Remove the rotor blades and check for binding in the horizontal pin bearings. If binding is present, it will be noted when the rotor hub extension links are raised and lowered by hand.
   3. Check for binding or lack of lubrication in all upper flight control bearings, bushings, and trunnions. Give particular attention to the smaller pre-packed type bearings.
   4. Rerig the helicopter flight controls as outlined in Flight Controls Rigging Procedure, this section.
   5. Check for unbalance in all drive shaft sections. Make certain that bearings are running free.
   6. Check engine cooling fan for balance, track, and concentricity as outlined in Cooling Fan, Section V.

c. Phase Three—Renewal of Rotor Components.
   1. Install new set of blades. If no improvement, reinstall old blades.
   2. Install new rotor hub assemblies. If no improvement, reinstall old hubs.
   3. Remove power plant and renew the engine dynafocal absorbers.

2-4. GROUND RESONANCE. Ground resonance is a vibratory condition sometimes encountered when the helicopter is on the ground with its rotors turning. It cannot occur in the air. Resonance results when unbalanced forces in the rotor system cause the helicopter to rock on its alighting gear at or near its natural frequency. The problem of its elimination is complicated by the fact that as lift is applied to the rotors, the natural frequency of the helicopter changes.

Under normal conditions, the alighting gear oleos and blade lag dampers will, by energy dissipation, prevent the resonance from building up to serious proportions. Incorrect tire pressure, improper oleo adjustment, and defective lag dampers are the major causes of ground resonance.

Because of the seriousness of ground resonance, all personnel who will run up the helicopter are cautioned to read the Flight Handbook thoroughly, since it is possible to induce resonance by certain combinations of flight control and engine power settings. Destruction of the helicopter may result if ground resonance is allowed to build up too high.

2-4A. TROUBLESHOOTING.

Trouble	Cause	Remedy
Ground Resonance	One bad or stuck damper	Install new damper. If no improvement, reinstall old damper
	Low alighting gear oleo air pressure	Increase static load extension to correct value given in Section I
	Low fluid supply in alighting gear oleos	Add hydraulic fluid as outlined in Section I
	Sticking oleo piston	Coat exposed portion with hydraulic fluid
	Low tire pressure	Inflate tires to correct pressures given in Section I
	Loose wheel retaining nut	Tighten and safety nut
	Rotor blade badly out-of-track	Re-track blades. See Blade Tracking, Section I
	Damaged rotor blade causing unbalance	Install new blade set
	Excessively worn horizontal or vertical pin in rotor hub	Install new rotor hub assembly

2-5. ROTOR GROUP.

CAUTION

All parts have been properly identified by the contractor. However, if for any reason it becomes necessary to reidentify parts, extreme care should be exercised. Because of the possible build-up of stress concentrations, impression stamping or permanent etching must not be used on any parts unless specific instructions are given in this handbook. The use of rubber ink stamp or the tagging of parts is acceptable.

2-6. WOODEN ROTOR BLADES.

Note

Wooden rotor blades may be used on all H-21 models. Metal blades may be used only on H-21B and H-21C models.

2-7. DESCRIPTION. (See figure 2-1.) Three rotor blades are attached to each of the two rotor hub assemblies which are longitudinally disposed on the helicopter. A series of steps, built into the fuselage, provides access to the rotor and blade assemblies. The rotor blade assembly consists of a steel spar, 51 contour ribs, and a plywood cover. The leading edge of the blade is protected by a corrosion-resistant sheet steel cover recessed in and bonded to the plywood blade cover. The trailing edge of the rotor blade is reinforced by aluminum strips which are bonded to birch strips. These birch strips are bonded together and then bonded to the rotor blade. The blade tip is protected by a steel cover which may be removed to give access to the balance boxes located in the blade tip. Two other balance boxes are provided at stations 60.0 and 136.0. An adjustable trim tab is located on the blade trailing edge between stations 137.5 and 154.0.

CAUTION

Premature jaw clutch engagement or an engine cutout followed by an abrupt restart may result in blade failure. Should either of these conditions occur, check the blade skin carefully for cracks, paying particular attention to possible separation of the trailing edge. Also check the exposed section of the blade spar for straightness by laying a straight edge along the spar. Spar bend between blade end and outboard end of root socket must not exceed 0.020 inch.

Colored markings in the form of 1/4-inch dots will be found on the root ends of the wooden rotor blades. These dots are used by the manufacturer to identify blades which have gone through various quality control operations and do not have any significance as far as field activities are concerned. However, to avoid any confusion which might be caused by the use of this color code, the following information is provided:

a. When the wooden rotor blades were first modified by the addition of the metal trailing edge, all modified blades were returned to the manufacturer for tracking adjustments and flight testing before being released to using organizations. At that time, all modified blades could be identified by the metal trailing edge and by the revised part number which was stamped on the identification plate. No method of identification by use of a color code was made at that time.

b. Experience at the manufacturer's plant and in the field soon made it apparent that there were inconsistencies between blades which must be corrected. Therefore, an intensive inspection program was instituted by the manufacturer. This program included the following steps:

1. Dimensional and contour checks at five spanwise locations.
2. Inspection for presence of zinc-chromate primer in spar tubes.
3. Inspection for security of teeter weights.
4. Inspection for equal numbers of tip tracking weights in each blade in a set.
5. Rebalance of blades for chordwise center-of-gravity and spanwise moment.

c. When this inspection program was started, all blades furnished by the manufacturer were subjected to the inspection and, if accepted, were identified by a *yellow* dot painted on the blade root end, *prior* to being released to the services.

d. All blades which had been *previously* released to the services and *returned* to the manufacturer for modification were subjected to the inspection described in paragraph b. and, after

1 Protective Strip
2 Protective Strip
3 Tip Cover
4 Balance Weights
5 Trim Tabs
6 Wooden Rotor Blade
7 Plug
8 Split Sleeve
9 Bolt
10 Socket
11 Bolt, two
12 Spar Assembly
13 Root End Yoke
14 Yoke Pins, two
15 Leading Edge Cover
16 Balance Bar
17 Balance Weights
18 Balance Weight Cover
19 Blade Tip Cover
20 Tracking Weights
21 Trim Tabs

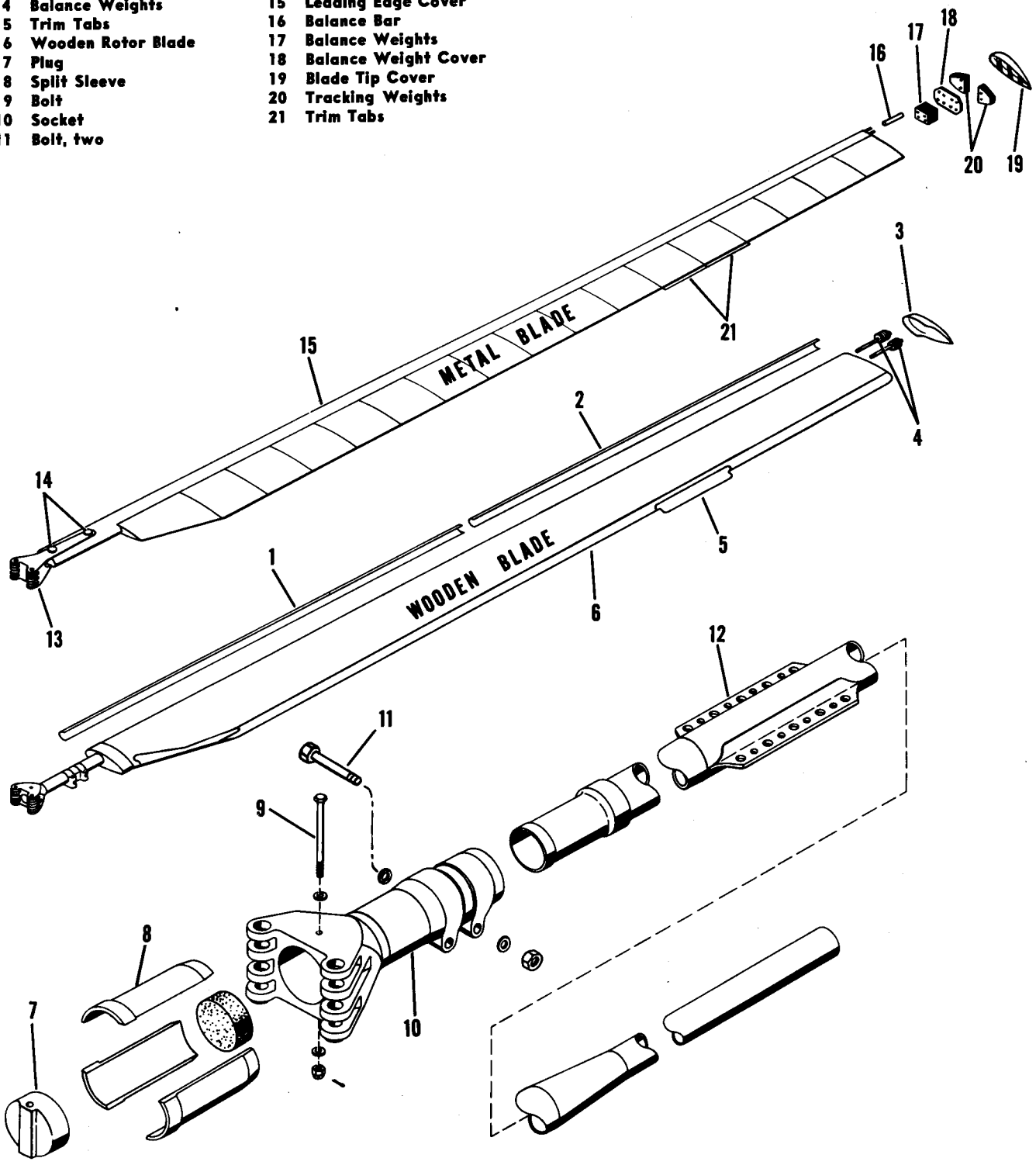

Figure 2-1. Wooden and Metal Rotor Blades

acceptance, were identified by a *green* dot painted on the blade root end.

e. The inspection program was later enlarged to include two additional requirements. These requirements were:

1. A more rigid inspection of the trailing edge for straightness and alignment.
2. A collective pitch track to 12 degrees pitch on the manufacturer's test stand with adjustment to the blade pitching movement, as necessary, to provide acceptable boost-off stick forces within bungee limitations.

To identify blades accepted under the more closely detailed inspection program, a red dot is used.

f. All blades furnished by the manufacturer are now subjected to the full inspection program and, if acceptable are identified by a *red* dot painted on the blade root end prior to release to the services.

g. All blades which have been released to the services and are now being returned to the manufacturer for modification are subjected to the full inspection program and, if acceptable, are identified by a *red* dot and a *green* dot painted on the blade root end.

2-8. REMOVAL. (See figure 2-2.) Remove the rotor blades in the following manner:

a. Engage the blade pitch lock mechanism (10 or 11, figure 1-5).

b. Raise blade tip slightly to relieve load on the taper pins caused by static weight of the blade.

c. Support the root end of the blade to further relieve the load on the taper pins and to relieve the load on the pitch bearing housing while the taper pins are being removed. Remove the taper pin retaining nuts and washers.

CAUTION

Improper removal and installation procedure of the taper pins may cause scoring of the pins, blade root ends, and/or pitch bearing housings.

d. Pull the taper pins straight out by using the taper pin puller (figure 2-2) or pin remover (22E5972) and carefully remove the blade.

2-9. CLEANING AND WAXING. The wooden blades should be wiped frequently with a soft cloth or washed with a solution of water and mild soap conforming to Federal Spec P-S-599, followed by a water rinse. Wax the top surfaces only of each blade after washing, using a good grade of commercial paste wax (Johnson Co, Racine, Wisconsin, or equivalent). Use a thin even wax coat so that blade balance is not disturbed.

WARNING

The vent holes on the underside of the blade and in the blade tip must be kept open to relieve internal air pressure and to permit drainage of internal condensation.

2-9A. COLD WEATHER OPERATIONS. Rotor blades are extremely critical to ice accumulation. De-icing fluid should be applied to remove frost and ice accumulation before operating the blades. Dry snow can be brushed off.

CAUTION

Do not try to chip ice accumulation from rotor blades because of possible damage to the finish and/or cover.

It is recommended that no blade be over the fuselage while preheating as heat from the fuselage will tend to melt any snow that may be on the blades and it may turn into ice.

2-9B. ROTOR BLADE LUBRICATION. The polished surfaces of the blade taper pins and the tapered holes in the blade root sockets and pitch bearing housings are subject to fretting corrosion after approximately 100 hours of operation. This condition results in pitting of the polished surfaces which induces stress concentrations and can eventually lead to failure of the taper pins, root sockets and pitch bearing housings. To prevent fretting corrosion from occurring, the following instructions should be used as often as necessary. (See Special Service Notes of Lubrication Chart, Section I, for frequency of lubrication.)

a. Wipe the taper pins and tapered holes in the blade root sockets and pitch bearing housings with a cloth saturated with solvent, Federal Spec P-S-661, to remove dirt and grease.

b. Wipe the pins and holes with a clean rag saturated with phosphoric acid base cleaner, Spec MIL-M-10578, type III, to remove all products of fretting oxidation.

c. Wipe all surfaces with a damp cloth to remove all traces of the cleaner, then wipe the surfaces dry.

CAUTION

Do not use abrasives of any type for cleaning taper pins or taper pin holes.

d. Immediately after cleaning, coat all mating surfaces with anti-seize compound, Spec JAN-A-669.

Note

The instructions in steps b. and c. apply only to parts which have been in service. New parts need not be treated in this manner.

2-10. DISASSEMBLY. (See figure 2-1.) Blade disassembly is limited to the removal of the following parts. Tag or reference mark all units as they are removed so that parts will not be interchanged between blade assemblies and balance will not be affected.

a. Remove the bolt which fastens the plug (7) in the blade root socket (10).

b. Remove the two cuff bolts (11) from the socket.

c. Spread the socket (10) with a spreader (22E5900) until it can be turned freely on the spar.

d. Slide the socket toward the blade tip until the split sleeve (8) is exposed.

e. Remove the split sleeve (8) and slide the socket (10) off the spar.

Note

The three sections of the split sleeve are matched and must not be interchanged with sleeves from other blades.

2-11. ASSEMBLY. (See figure 2-1.) The blade root socket, split sleeve, and plug must be assembled to the blade from which they were removed. Assembly is as follows:

Note

Do not use zinc chromate paste when assembling the blades. A thin coat of zinc chromate paint must be applied and allowed to dry before assembly.

a. Spread the blade root socket (10) with a spreader (22E5900) and slide it over the blade spar far enough to allow the split sleeve (8) to be placed on the spar end.

b. After the split sleeve (8) is in place, slide the blade root socket (10) back over sleeve until its internal shoulder is tight against the sleeve and the sleeve is against the shoulder on the end of the spar.

c. Install the plug (7) in the end of the root socket and secure it with its retaining bolt (9).

d. Install the two cuff bolts (11) but do not tighten them.

e. Install the blade in the holding fixture (figure 2-3), "snap" the blade to settle the spar in the root socket and split sleeve, and then adjust blade to correct angle of incidence.

Note

The blade "snapping" is done by pulling quickly and hard on the tip of the blade. This "snapping" action pulls the split sleeve into the blade root socket to form a firm fit of these parts.

2-12. ADJUSTMENT—BLADE ANGLE. (See figure 2-3.) The blades must be adjusted in their root sockets to form the correct angle between the centerline of the blade attachment point (which accommodates the two taper pins) and

the chord line of the blade airfoil. To perform this adjustment, a holding fixture (1) is used to hold the centerline of the attachment point exactly vertical. This fixture is secured to a beam or wall so that the centerline of the two taper pins will be exactly vertical. The blade root is then attached to the fixture with the taper pins in the same manner as it is attached to the rotor hub on the helicopter. Support the tip end of the blade in a stand (5). The saddle which accommodates the blade is mounted on the stand base so that it can pivot, as the blade angle is changed, to prevent twisting the spar and subsequently obtaining an incorrect reading. The adjustment procedure is as follows:

a. Mount the blade in the fixture (1) and stand (5).

Note

If the blade has just been reassembled, it is recommended that it be "snapped" in its root socket.

b. Place the special protractor base (4) and a bubble protractor on the blade at a distance of 160 inches from the inboard end of the blade envelope.

c. Make certain the two cuff bolts are loose.

d. Attach the special blade adjusting wrench (2) on the exposed portion of the blade spar.

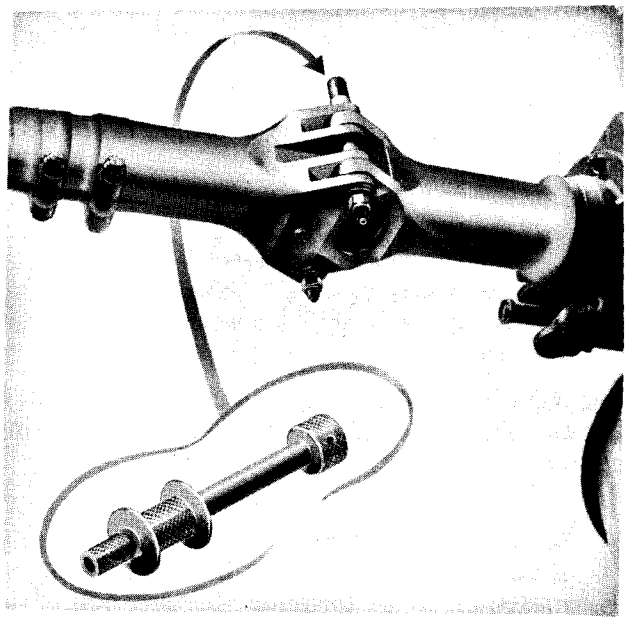

Figure 2-2. Blade Taper Pins and Puller

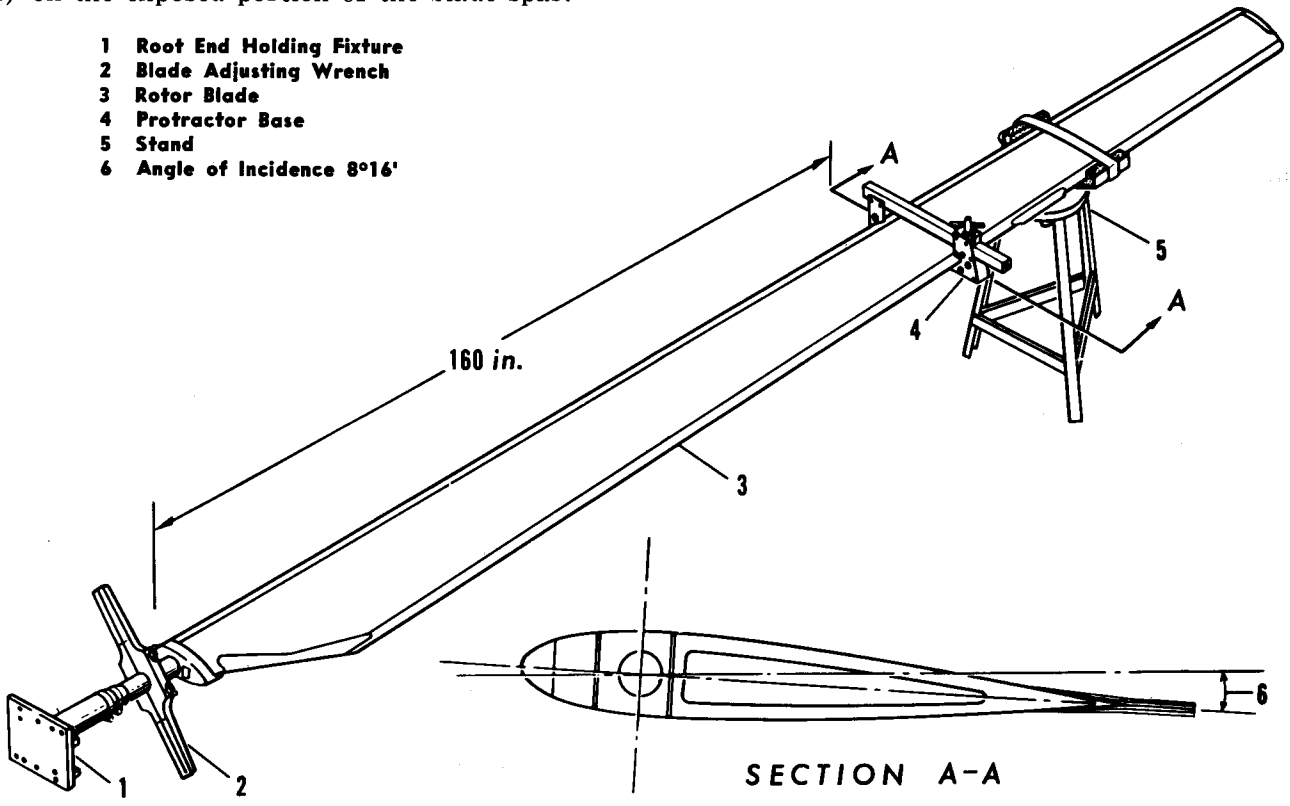

Figure 2-3. Blade Angle Adjustment—Wooden Blade

e. Set the blade to an angle of 8°16′ by tapping lightly on the adjusting wrench to twist the blade in the socket. Tolerance on this angle setting is ±5 minutes.

f. Tighten the two cuff bolts which clamp the blade socket on the spar to a torque of 750–850 pound-inches.

CAUTION

Be sure these two cuff bolts are tight. Loose cuff bolts will allow the blade to slip and change its angle of incidence.

g. Check the blade angle again to be certain it has not changed while the cuff bolts were being tightened.

Note

Measure the width of the slot in the socket. The width must be 0.010 inch minimum after torquing the cuff bolts.

h. Install blades and check for proper track.

2-13. INSTALLATION. (See figure 2-2.) Install blades as follows:

CAUTION

Refer to table 2-1, Usability of Rotor Hubs with Rotor Blade Sets, before installing the rotor blades.

a. Apply a thin film of anti-seize compound, Spec JAN-A-669, to the shank of the taper pins, being careful not to get any compound on the threads of the pins.

b. Make certain that the mating surfaces between the blade root sockets and pitch bearing housings are free of foreign matter.

Note

Foreign matter on the mating surfaces can act as an abrasive which may cause scoring. Any scratches on the mating surfaces which are deeper than 0.005 inch must be blended out to a depth *no greater* than 0.015 inch.

Mount the blade in position on the rotor hub, supporting blade at the tip and root ends. Check the bumper pads on the pitch bearing housing for a clearance of 0.020 inch with the face of the rotor blade socket. If the minimum clearance is not evident, remove the blade and file the bumper pads to obtain the desired clearance. Paint the filed surfaces with zinc chromate primer prior to remounting the blade.

c. Align the holes of the root end of the blade with those of the pitch bearing housing and carefully insert taper pins. Do not force pins into holes.

CAUTION

Misalignment will cause scoring of the taper pins and attaching lugs of the blades and pitch bearing housings.

d. Still supporting the blade at both ends, tap the taper pins with either a raw-hide or plastic mallet to seat the pins in the holes.

CAUTION

Improper installation procedure may cause scoring of the taper pins, blade root ends, and/or pitch bearing housings.

e. Install a washer and taper pin retaining nut on each pin, and while supporting the blade tip, torque the nuts to 90–100 pound-inches. Tap pins with a mallet and re-check the torque. Repeat this procedure until the torque is held.

f. Disengage the blade pitch lock mechanism. If old blades are being re-installed, the taper pin retaining nuts must have the torque rechecked after a short period of operation.

Note

When new blades are installed they must be tracked as outlined in Blade Tracking, Section I. After tracking, recheck the torque of the taper pin retaining nuts.

2-14. METAL ROTOR BLADES. **H-21B, H-21C**

2-15. DESCRIPTION. (See figure 2-1.) The rotor blades used on the H-21B and H-21C helicopters are of all metal construction. The leading edge of the blade is a formed D-section steel tube to which the root end yoke is attached. This yoke is attached to the leading edge section by two vertical pins.

Note

The metal blades used on the H-21B and H-21C helicopters may be replaced by the wooden blades used on the YH-21 and H-21A helicopters. Whenever wooden blades are used to replace metal blades, both sets of blades must be replaced as both forward and aft rotors must carry the same type blade sets.

The trailing edge of the rotor blade is made of a series of aluminum alloy covered boxes which are bonded to the leading edge with a Fiberglas tape, impregnated with a special bonding agent. There are 17 of these trailing edge boxes, each box con-

TABLE 2-1
USABILITY OF ROTOR HUBS WITH ROTOR BLADE SETS

Rotor Hub Assembly	Hub Location	May Be Converted To	Rotor Blade Set 22R1251							
			-13	-14	-23	-24	-33	-34	-35	-36
22R2001-7	Fwd	22R2001-11	X	...	X	...	...	...	...	...
22R2001-8	Aft	22R2001-12	...	X	...	X	...	...	...	...
22R2001-9	Fwd	22R2001-13	X	...	X	...	...	...	...	...
22R2001-10	Aft	22R2001-14	...	X	...	X	...	...	...	...
22R2001-15	Fwd	22R2001-13	X	...	X	...	...	...	...	...
22R2001-16	Aft	22R2001-14	...	X	...	X	...	...	...	...
22R2001-11*	Fwd	42R2001-1	...	...	...	...	X	...	X	...
22R2001-12*	Aft	42R2001-2	...	...	...	...	...	X	...	X
22R2001-13*	Fwd	42R2001-3	...	...	...	...	X	...	X	...
22R2001-14*	Aft	42R2001-4	...	...	...	...	...	X	...	X
42R2001-1*	Fwd	.....	...	...	...	...	X	...	X	...
42R2001-2*	Aft	.....	...	...	...	...	...	X	...	X
42R2001-3*	Fwd	.....	...	...	...	...	X	...	X	...
42R2001-4*	Aft	.....	...	...	...	...	...	X	...	X

* Rotor Hubs that will accommodate Metal Blades.

22R1251-13† Blade Set = 22R1003-141 Blade Assemblies
22R1251-14† Blade Set = 22R1003-142 Blade Assemblies
22R1251-23† Blade Set = 22R1003-241 Blade Assemblies
22R1251-24† Blade Set = 22R1003-242 Blade Assemblies
22R1251-33 Blade Set = 22R1003-341 Blade Assemblies
22R1251-34 Blade Set = 22R1003-342 Blade Assemblies
22R1251-35 Blade Set = 22R1003-441 Blade Assemblies
22R1251-36 Blade Set = 22R1003-442 Blade Assemblies

† Blade Sets requiring the short taper pin. Other blade sets require the long taper pin.

NOTE: The short taper pin (22R2078-1) is 7.25 inches in length and must not be used on 22R1251-33, -34 blade sets. The long taper pin (42R2063-1) is 7.50 inches in length and is used only on 22R1251-33, -34 blade sets. The AN975-8 cupped washer is recommended for use on both short and long taper pins, although the plain flat washer can be used on the short taper pin.

sisting of five contour ribs riveted to a channel. The one-piece aluminum skin is bonded to the ribs with the same material used for bonding the trailing edge boxes to the leading edge. The boxes are joined with a rubber seal strip glued to the inner surfaces of the skin along the outboard edge. A steel cover is attached to the blade tip and may be removed for access to the balance and tracking weights. Two of the boxes have adjustable trim tabs attached to the trailing edge. These boxes are located between blade stations 189.31 and 216.5.

CAUTION

Premature jaw clutch engagement or an engine cutout followed by an abrupt restart may result in blade failure. Should either of these conditions occur, check the blade skin carefully for cracks, paying particular attention to possible separation of the blade boxes. Also check for possible buckling.

2-16. REMOVAL. (See figure 2-2.) Removal procedure is the same as that for the wooden blade.

2-17. CLEANING OF METAL BLADES. The metal blades used on H-21B and H-21C helicopters are painted black on the underside and light gray on the top. The metal blades may be cleaned by using any of the following:

a. Solution of water and mild soap conforming to Federal Spec P-S-599, followed by a water rinse.

b. Naphtha conforming to Federal Spec TT-N-97, type I, grade B.

c. Stoddard solvent conforming to Federal Spec P-S-661.

d. Cleaning compound conforming to AAF Spec 14128.

2-17A. COLD WEATHER OPERATIONS. For information, refer to paragraph 2-9A.

2-18. DISASSEMBLY AND ASSEMBLY. No disassembly of the metal blades should be attempted by field activities. Blades requiring overhaul or repair should be returned to the nearest activity capable of performing this work.

2-18A. ROTOR BLADE LUBRICATION. For information refer to paragraph 2-9B.

2-19. ADJUSTMENT—BLADE ANGLE. Each of the metal blades is identified by a nameplate on which is stamped an incidence angle correction factor. When the blade is installed, adjust the pitch link to give a change in blade incidence angle corresponding to the correction given on the plate. Lengthening the pitch link one turn increases the angle of attack of the blade by 0° 27′. Shortening the pitch link one turn results in a corresponding decrease in the blade attack angle. When any metal blade set is removed, the pitch link must be returned to its original length before installing a new set.

2-20. INSTALLATION. The procedure for installing the metal rotor blades is the same as that for the wooden blades.

2-21. ROTOR HUB ASSEMBLY.

2-22. DESCRIPTION. (See figure 2-4.) The rotor hub assembly transmits torque supplied by the rotor transmissions to the rotor blades. In addition, it allows the rotor blades to flap, lead, lag, and change pitch. The horizontal pins allow flapping, the vertical pins allow lead or lag, and the pitch bearing assemblies allow pitch changes. The rotor hub assemblies are located above each rotor transmission. Steps in the fuselage provide access to both assemblies. The steel hub is splined to the rotor shaft and is secured by a nut, washer, and lock ring. Three equally spaced horizontal pins are set in the hub. Three short extension links hinge on the horizontal pins. A vertical pin is located in the outer end of each extension link. A pitch bearing assembly hinges on each vertical pin. The pitch bearing assembly consists of a pitch shaft on which a pitch bearing housing rotates. Inside the assembly, a stack of tension torsion straps is pinned to the pitch shaft on its inboard end and to the bearing housing on its outboard end. The low torsional stiffness of these straps permits pitch changes during operation. The outboard end of the pitch bearing housing is formed into lugs to which the blade is attached. A blade lag damper is installed between each horizontal pin and pitch shaft to restrain blade lag and help prevent ground resonance. A pitch arm is attached to a flange on the pitch bearing housing. This arm transmits the movements of the rotor control assembly to the blade. Stops are located on the top and bottom of the hub to limit the flapping motion of the blades. These stops allow 30 degrees of upward flap and 4-1/2 degrees of droop.

2-22A. INSPECTION. The pitch bearing housings must be checked for evidence of leakage at the inboard and outboard ends. If leakage exists, check the torque of the nut, securing the tension-torsion bolt (22), which should be 85–100 pound-inches and wipe the inboard area and the outboard plastic cups dry. Check the oil level in the housing and add oil if necessary. If, after the next hour of flight, excessive leakage still exists, the hub must be removed and the pitch bearing housing replaced.

2-23. REMOVAL. (See figure 2-4.)

a. Remove the rotor blades.

b. Disconnect the three pitch links (2) at their upper ends where they attach to the blade pitch arms (3).

c. Pry the cap (6) from the top of the rotor shaft and remove the snap ring (7) which locks the hub retaining nut to the rotor shaft.

d. The rotor hub retaining nut (5) can be removed from the rotor shaft (15) by using either of two special wrench assemblies (22E5809 or the Powerench assembly) which are listed in paragraph 1-94, Section I. If Powerench assembly is used, proceed as follows:

1. Assemble the components of the wrench assembly listed in paragraph 1-94 on the rotor hub as shown in figure 2-3A. One side of the anchor plate (SWE-124210) will fit the forward rotor hub; if used on the aft rotor hub, the plate is turned over.

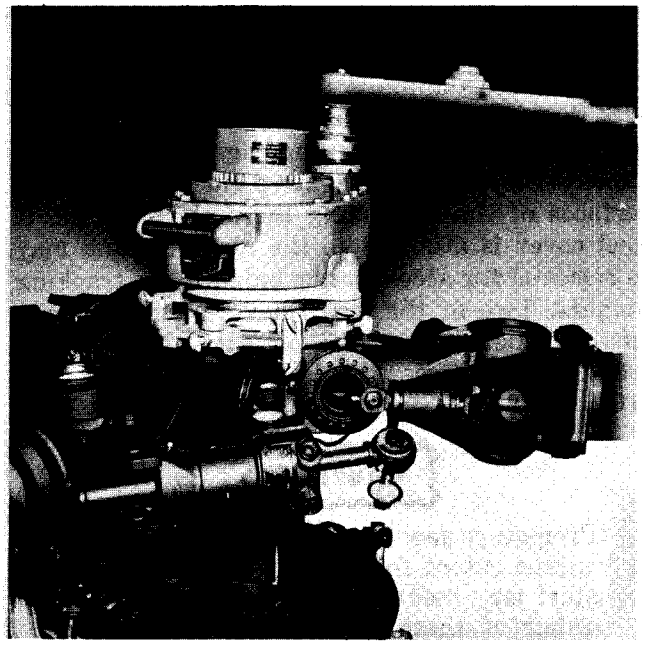

Figure 2-3A. Torquing Rotor Hub Retaining Nut

2. *The work handle (SWE-63) should normally be used when loosening the retaining nuts.* The tension indicator (SWE-54) should be used *only* for torquing. However, it may be used to determine the torque required for loosening. When torquing with the tension indicator (SWE-54), make sure that the inner dial is turned all the way against the stop in the direction opposite that in which the indicator is to be turned. Then align the outer reference marker with the inner dial. *Always reset* the dial before using the wrench in the opposite direction, since applying force with the dial set in the wrong direction will damage the dial mechanism. The dial used is a "stay set" dial, and will remain at the highest torque indicated until reset.

e. Remove the hub retaining nut (5) and the washer (4).

f. Install the hub puller (22E5930 or 22E5954) and break the hub loose from the splines of the rotor shaft.

g. Lift the hub assembly off the rotor shaft using the eye in the hub puller as an attachment point for the hoist.

2-24. REPAIRS. Repairs requiring disassembly of the rotor hub or components should not be attempted by field activities. However, minor repairs, adjustments and replacement of components may be accomplished, provided that such repairs, adjustments and replacements do not alter the balance of the hub. The following procedure will determine the necessity of reinstalling droop stop pads that are loose or have fallen off of the rotor hubs that have them installed.

a. With the rotor blades in any position and the collective pitch lever down and locked, place a bubble protractor on the rotor hub inboard of the extension link (18) and in line with the centerline of rotor blade spar. This must be done at the position the droop stop pad was removed for looseness or fell off. Record the angle of the hub at that position.

b. Place the protractor on the extension link (18) and in line with the centerline of the rotor blade spar. Record the angle of the extension link.

c. Determine the difference between the two angles. The difference should not be greater than 5 degrees and not less than 4 degrees, 30 minutes. If the difference is more than 5 degrees, the droop stop pad must be reinstalled as outlined in step e.

CAUTION

The possibility of the rotor blades striking the fuselage increases if the droop angle of the extension link goes beyond 5 degrees.

d. Repeat steps a. to c. at each position where a droop stop pad has been removed for looseness or has fallen off.

Note

An entry is required in the applicable Historical Record for Aeronautical Equipment forms for each droop stop pad that is removed and its position. This is to ensure that the droop angle check is performed and to prevent removal or require reinstallation of a pad if the droop angle is not within tolerance.

e. The droop stop pads are reinstalled as follows:

1. Remove grease from the faying surfaces of the hub and pads with naphtha or an equivalent solvent.
2. Dip the pads in a solution consisting of one part Turco W.O. No. 1 cleaner (Turco Products Inc, Philadelphia, Pa) and three parts water. Wipe the lower hub surfaces with this solution allowing the surfaces to remain wet for two minutes.
3. Wash off the Turco solution with clear water and wipe the surfaces dry.
4. Apply EC-801 adhesive compound with EC-807 accelerator (Minnesota Mining and Manufacturing Co) to the lower surfaces of the hub.

Note

There should be no bond between the hub and the stop surface of the pad.

5. Slide the pad into position, and slide it axially several times to ensure adhesion of the bond to the pad. Apply a uniformly distributed pressure to the stop surface to ensure metal-to-metal contact. Hold this pressure for at least 12 hours. Spring tension in the pad is enough to supply pressure on the bond.
6. Make another droop angle check as outlined in steps a. to c. and, if the angle still exceeds 5 degrees, replace the pad with a thicker pad. If the angle is less than 4 degrees, 30 minutes, file the pad until the droop angle falls within tolerance.

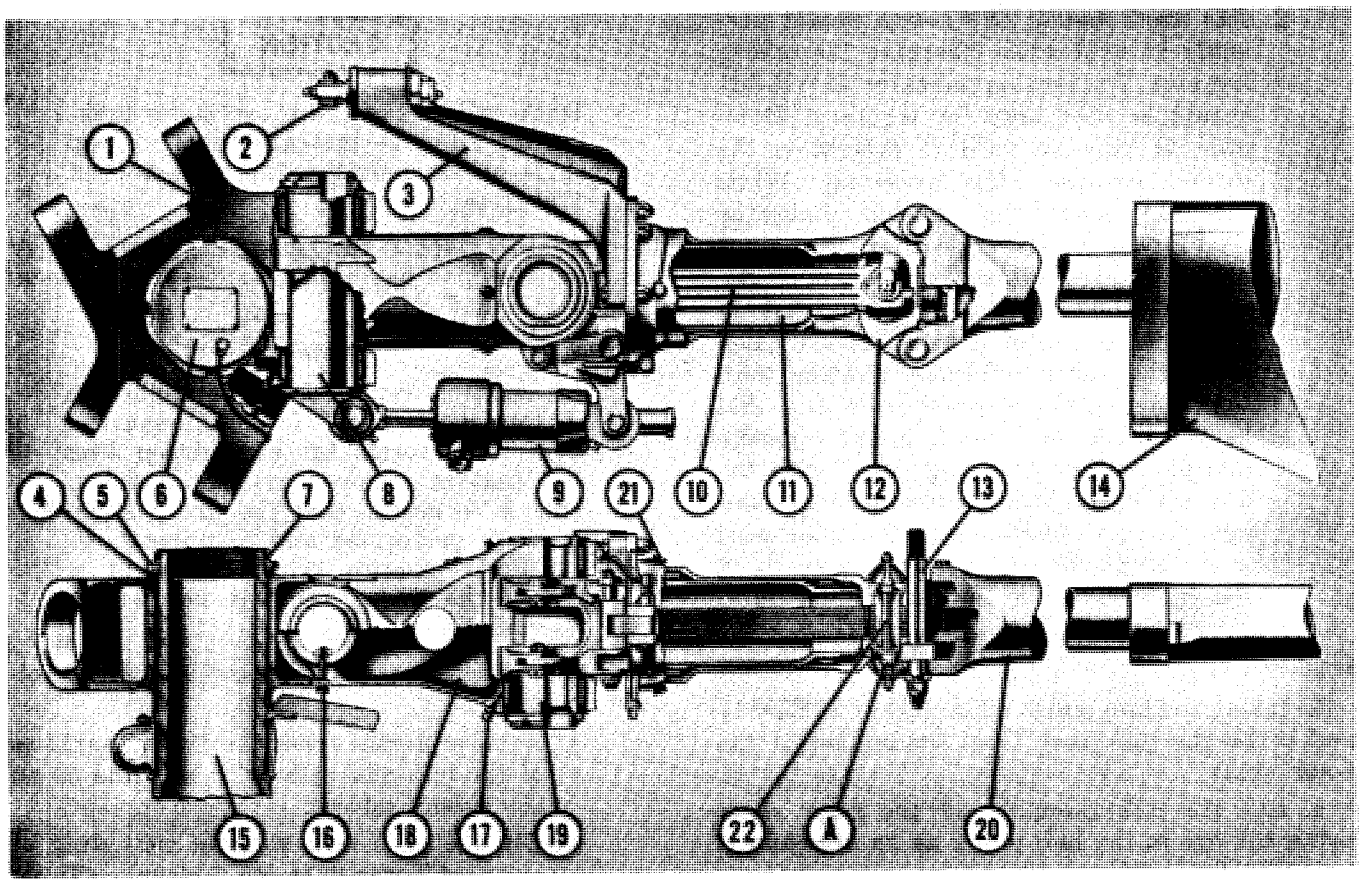

1 Hub Sub-Assembly
2 Pitch Link
3 Pitch Arm
4 Washer
5 Lock Nut
6 Cap
7 Lock Ring
8 Horizontal Pin
9 Lag Damper
10 Tension-Torsion Straps
11 Pitch Shaft
12 Pitch Bearing Housing
13 Taper Pin
14 Rotor Blade
15 Rotor Drive Shaft
16 Droop Stop
17 Lubricator Fitting
18 Extension Link
19 Vertical Pin
20 Blade Root Socket
21 Filler Cap
22 Tension-Torsion Bolt
A Torque to 85–100 lb in.

Figure 2-4. Rotor Hub

2-25. INSTALLATION. (See figure 2-4.)

a. Prior to the installation of the hub on the shaft, the bolts which attach the droop stops (16) should be checked to see if they are properly lockwired. Coat the splines of the rotor shaft with Spec JAN-A-669 anti-seize compound and mount the hub assembly on the shaft, using hub puller and a hoist. The master spline on the hub will mate with a corresponding spline on the rotor shaft.

Note

The bonding jumper attaching the cap (6) to the hub sub-assembly (1) is the only bonding jumper required; the other three are to be removed. Make sure the screw holes are painted with zinc chromate primer to preclude corrosion. Be sure the rainshield is installed on the forward rotor, or the hub spacer on the aft rotor, before lowering the hub assembly onto the rotor shaft splines.

b. Install the washer (4) on top of the hub and thread the hub retaining nut (5) onto the rotor shaft. Coat threads of shaft and nut with Spec JAN-A-669 anti-seize compound.

c. Tighten the hub retaining nut to a torque of 5000–10,000 pound-inches, using the Powerench assembly as directed in paragraph 2-23, step d., or the special wrench (22E5809) and a standard torque wrench.

Note

Rap the wrench sharply several times during final turn on nut to relieve torque loads due to thread binding.

d. Lock the retaining nut to the rotor shaft with the lock ring (7) and install the cap (6) on the top of the shaft.

Note

The edges of the cap are made so as to provide tension for retention on the rotor head. Tapping on the cap with a tool when installing will decrease the tension causing a possible loss of the cap in flight. It is recommended that lock wire be wrapped around the edge of the cap enclosing the lock ring and twisting the lock wire to increase the spring tension.

e. Align the lugs on the hub extension links and the attaching points on the droop stops. Install one of the three attaching screws so that it is centered between the lugs of the swash plate drive scissors and extends between the lugs. This will prevent rotation of the hub collar. Lockwire the attaching screws to the droop stop bolt heads.

f. Connect the three pitch links (2) to the blade pitch arms (3), applying Spec MIL-G-3278 grease to the shanks of the close tolerance steel bolts.

Note

Bolt heads must be placed toward the hub to maintain clearance.

g. Install the rotor blades.

2-26. BLADE LAG DAMPER.

2-27. DESCRIPTION. (See figure 2-4.) The blade lag damper assembly is a hydraulic damping unit which restrains blade motion about the vertical pin and helps to prevent ground resonance. Lead and lag stops for the blade are built into the assembly. The unit is installed on the rotor hub assembly between the horizontal pin and the pitch bearing shaft. On its inboard end, the damper is attached to a pair of lugs on the trailing side of the horizontal pin. On its outboard end, the damper is attached to a pair of brackets which are bolted to the pitch bearing shaft. A self-aligning needle bearing at the inboard end of the damper compensates for deflections of the linkage.

2-28. REMOVAL. (See figure 2-4A.) To remove the blade lag damper, proceed as follows:

a. Cut the lock wire on the inboard attaching bolt (1) and the two lag damper positioning nuts (3).

b. Back off the positioning nuts as far as possible. Remove the cotter pin, retaining nut (7), bolt (1), and the two positioning nuts (3).

CAUTION

The bushings (2) may come out with the positioning nuts. Do not reinsert bushings until the lag dampers are to be reinstalled.

c. Remove the lag damper (5) and grease seals (6). Check the damper piston rod for scoring. If score marks are present, the unit may be used providing no evidence of hydraulic leakage appears on the rod. If hydraulic fluid is found on the rod, the damper must be replaced.

2-29. INSTALLATION. (See figures 2-4 and 2-4A.) Installation of the blade lag damper is accomplished in the following manner:

Note

If the bearings are being replaced in the lugs, make sure that the lubrication hole of the bearing aligns with the lubrication hole in the lug. No precautions are necessary at the rod end other than centering the bearing in the rod, because the bearing and the inside of the rod both have grease grooves.

a. Place the damper assembly (5, figure 2-4A) in position so that the two ears on the outboard end of the damper housing are inside the mounting brackets attached to the pitch bearing shaft. The filler plugs on the damper must be facing away from the extension link. Attach the outboard end of the damper with two bolts. The bolts should be installed with the head up on the upper bolt and head down on the lower bolt. Torque the bolts to 200–250 pound-inches. Secure the nuts with cotter pins.

b. Swing the inboard end of the damper into position between the ears on the horizontal pin. Place a seal (6) on each side of the self-aligning bearings before inserting the attaching bolt.

c. Install the two bushings (2), lag damper positioning nuts (3), attaching bolt (1), retaining nut (7) and torque nut to 240–312 pound-inches. Secure the nut with a cotter pin.

CAUTION

When tightening the attaching bolt and nut, the damper positioning nuts must be loose.

d. Tighten the damper positioning nuts (3) by hand until they are snug against the ears of the horizontal pin (4).

CAUTION

The damper end must not move axially about the bolt while the damper positioning nuts are being tightened. Do not overtighten the positioning nuts.

e. Lockwire the bolt and positioning nuts to the horizontal pin ears as shown in figure 2-4A.

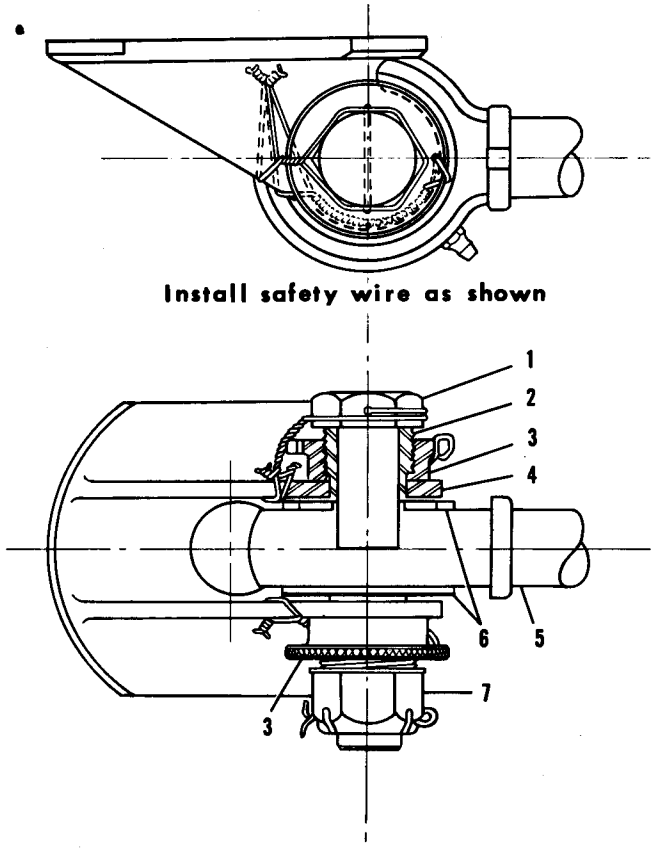

1 Bolt
2 Bushing
3 Positioning Nut
4 Horizontal Pin
5 Lag Damper Assembly
6 Seal Assembly
7 Retaining Nut

Figure 2-4A. Blade Lag Damper Installation

2-29A. LAG DAMPER CHECK. Excessive vibration in the rotor system may be caused by lag dampers which have an accumulation of air in their working chambers. To determine whether the lag dampers are functioning properly, the following lag dampers check should be performed daily:

a. Check the dampers for the presence of air while installed on the hub by grasping the spar tube of each blade outboard of the taper pins and moving the blade sharply in the lead and lag directions. A slow movement must be avoided since this will permit the piston to suck air into the damper hydraulic chamber, resulting in spongy damper action.

Note

The lead and lag motion of the blade should not be obtained by applying forces to the tip of the blade because the mechanical advantage gained may prevent the feel for a resisting pressure at the damper piston. The spar tube should be used for performing this check since it is convenient and provides proper mechanical advantage for moving the blade about the vertical pin.

b. Check for an immediate steady pressure against the blade movement. There should be no piston rod motion without the presence of a resisting pressure when making this check. If there is motion with no resisting pressure, the piston rod should not travel more than 1/4 inch in either the lead or lag direction. If motion of the piston rod with no resisting pressure does not exceed 1/4 inch movement in either direction, the damper can be considered satisfactory. If this movement is exceeded, the damper should be replaced providing the helicopter vibration is unacceptable.

Note

Any motion with no resisting pressure which falls within the above piston rod travel limits may be caused by an accumulation of air in the working chambers within the damper. Since the damper is self-bleeding, a brief *forward* flight of three to five minutes duration should expel the air from the damper chamber. A hovering flight is not sufficient to expel the air since in hovering flight there is relatively little or no blade motion about the vertical pin in the lead or lag direction.

c. After the helicopter has landed and the engine has been shut down, recheck the damper for lack of resisting pressure as directed in step b.

Note

To preclude the possibility of air reentering the damper chamber and resulting in a false indication during the damper check, rechecking of the dampers should be done within 15 minutes after the engine has been shut down.

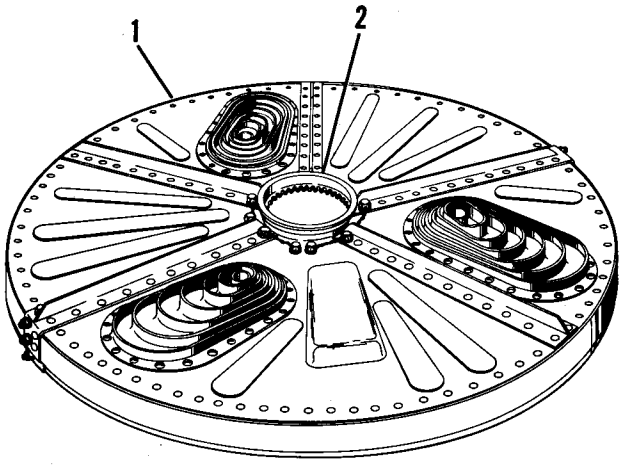

1 Rainshield 2 Collar

Figure 2-5. Rainshield

2-30. RAINSHIELD.

2-31. DESCRIPTION. (See figure 2-5.) The rainshield is a two-piece sheet metal disc mounted between the rotor control assembly and the rotor hub assembly on the forward rotor only. Its purpose is to protect the cockpit interior from rain. A spacer is mounted on the aft rotor shaft in place of the rainshield.

2-32. REMOVAL. (See figure 2-5.) The rainshield is made in two pieces so that it can be removed without removing the rotor hub assembly. Remove as follows:

a. Disconnect the three pitch links from the blade pitch arms.

b. Remove the terminal and lock nut from each pitch link.

c. Remove the 12 bolts which secure the two halves of the rainshield (1) to its collar (2).

d. Remove the 12 bolts and six screws which hold the two halves of the rainshield together.

e. Lift off the two halves of the rainshield by working the pitch link boots up over the ends of the links.

Note

Do not damage the gasket which is bonded to the rainshield collar.

2-33. INSTALLATION. (See figure 2-5.) The following procedure covers assembly and installation of the rainshield prior to installation of the forward rotor hub. If the rainshield was removed without disturbing the hub assembly, use such portions of this procedure as remain applicable.

a. Assemble the two halves of the rainshield using 12 bolts and six screws.

b. Bond the gasket to the rainshield collar with cement, Spec MIL-C-4003.

c. Attach the collar to the rainshield, applying zinc chromate paste where the gasket does not separate the rainshield from the collar.

Note

Be sure to position the rainshield in respect to the collar so that the uncut tooth in the collar is 90 degrees to the split section of the rainshield with the pitch link boots positioned as shown in figure 2-5.

d. Remove the terminals and lock nuts from the three pitch links and slide the pitch link boots over the ends of the pitch link shafts until the bead on each boot is seated in the retaining groove of the shaft.

Note

Form a slightly conical shaped tube of light gauge aluminum about six inches in length around the end of the pitch link before inserting the pitch link through the boot. This tube will act as a guard to prevent tearing of the boot while inserting the pitch link.

e. Coat the splines of the rotor shaft with anti-seize compound, Spec JAN-A-669, and install the rainshield on the shaft.

f. Reinstall the lock nut and terminal on each pitch link and adjust the nominal length of the link to 11-9/16 (11.562) inches. This measurement is from the center of the bolt hole in the terminal to the center of the bolt hole in the pitch link lower universal block.

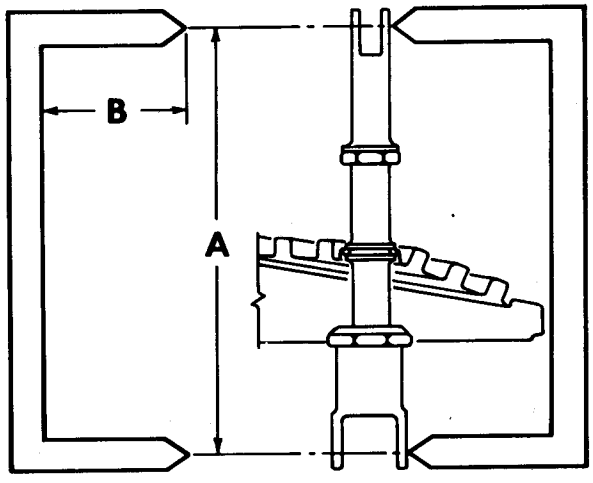

A—11-9/16 (11.562) Inches B—11 Inches

Figure 2-5A. Pitch Link Measuring Tool

Note

A tool for measuring the length of the pitch link may be made from 1/4-inch dural or any other suitable material. Refer to figure 2-5A for pattern. The dimension B is necessary to permit clearance of the rainshield.

g. Install the rotor hub assembly and the blades.

Note

Since the length of the pitch link affects blade track, the blades should be re-tracked after installation of the pitch links.

2-33A. COLD WEATHER OPERATIONS. Heat coming up from the cockpit and transmission heat ducting outlets will tend to melt snow

on the rainshield and turn it into ice, it is therefore recommended that all loose snow be brushed off prior to preheating. Remove ice accumulation from the rainshield by applying de-icing fluid.

2-34. ROTOR CONTROL ASSEMBLY.

2-35. DESCRIPTION. (See figure 2-6.) The rotor control assembly, which is located just below each rotor hub, consists of three pitch links, swash plate, gimbal ring, and drive scissors. It is mounted over a slider assembly which acts as a vertical guide. The function of this rotor control assembly is to transmit the vertical movement of the upper flight controls to the rotor hub; this motion changes the cyclic and collective pitch of the rotor blades.

Note

The forward and aft rotor control assemblies are similar with the excention of the parts designated for right- or left-hand rotation only.

2-36. REMOVAL. (See figure 2-6.)

a. Remove the rotor blades, the rotor hub assembly and the rainshield (if forward rotor) or hub spacer (if aft rotor).

b. Disconnect the three pitch link assemblies (31) including their lower universal block (43) from the swash plate assembly.

c. Disconnect the longitudinal link (28, figure 2-19, sheet 2) and the lateral link (22, figure 2-19, sheet 2) from the swash plate lower ring (64 or 69, figure 2-6), leaving the universal block assembly (67, figure 2-6) attached to the ring.

d. Disconnect the two link assemblies (52) from the upper controls. The links remain attached to the gimbal ring assembly (50).

e. Disconnect the scissors link assembly (13) from the swash plate assembly, and lift the scissors arm (9), link (13), and collar (1) as an assembly from the rotor shaft.

f. With the removal of the scissors assembly from the rotor shaft, the thrust collar and small rainshield on top of the slider assembly can be removed as necessary.

g. Remove the trunnion guide bolts (44), rotate the swash plate assembly so that it will clear the guide bolts' ears on the slider, and lift the swash plate assembly up over the slider and rotor shaft.

2-37. DISASSEMBLY. (See figure 2-6.)

Note

The following procedure applies to either forward or aft rotor controls.

2-38. Disassemble pitch links as follows:

a. Screw the terminal (32) and lock nut (33) from the pitch link shaft (34).

b. Remove the universal block assembly (43) from the lower end of the link assembly.

c. Remove the nut (35) from the link bearing housing (40), and pull the shaft (34) and bearing assembly (37) out of the housing.

d. Remove the pitch link shaft nut (39) and washer (38). Pull the pitch link bearing off the shaft with the remaining washer (36).

2-39. Disassemble universal blocks as follows:

a. Remove the bearing retaining nut (70), using special tool (22E5813-1, figure 1-27).

b. Drive the two bearings (71) from the block. Slots are provided in the bearing spacer (74) for access to the inner race of the bearing. Lift out the spacer after the bearings are removed.

CAUTION

All bearings must be inspected carefully for any defect or signs of wear.

c. Drive the two bearings from the other bore of the universal block (73). Lift out the spacer after the bearings are removed.

2-40. Disassemble the drive scissors assembly as follows:

a. Disconnect the scissors link assembly (13) and the collar assembly (1) from the scissors arm (9).

b. Remove the bearing retainer nuts (11 and 15) from the link (13), using special tools (22E5814-1, and 22E5815-1, figure 1-27).

c. Press the two bearings (12 and 16) from the link.

CAUTION

All bearings must be inspected carefully for any defects or signs of wear.

d. Drive the two bearings (3) from the collar (1), being careful, if the collar has bearing insert bushings, not to damage or loosen the bushings.

Note

Some collars (1) may come with bearing insert bushings, as shown in figure 2-6, where the bearings are pressed into the bushings. These collars are interchangeable with those without liners.

e. Slots are provided in the bearing spacer (6) for access to the bearing inner race. Lift out the spacer after the bearings are removed.

2-41. Disassemble swash plate as follows:

a. Remove the two link assemblies (52) and trunnion bevel washers (51) from the bolt end of the trunnion assemblies (46).

b. Remove the trunnions (46), spacers (48), and shims (49) from the gimbal ring (50).

Note

The shims (49) are peeled during assembly to give correct trunnion spacing in relation to the two guide rods on the slider assembly.

c. Remove the rainshield (18) and the upper swash plate ring (20) from the swash plate bearing. Remove the upper grease shield (22).

d. Remove the two bolts (56) which secure the gimbal ring (50) to the swash plate. Do not lose the washers (61) and spacers (62).

Note

The spacers (62) are ground during assembly to provide correct fit of the gimbal ring in the swash plate.

e. Disconnect the swash plate lower ring (64 or 69) from the swash plate bearing (23) by removing the 24 attaching bolts.

f. Remove the lower grease seal (28) from the swash plate bearing by removing the 18 screws around the circumference of the shield.

g. Wash the swash plate bearing (23) in plain Varsol or an equivalent solvent.

CAUTION

Chlorinated compounds, carbon tetrachloride, or kerosene should not be used for cleaning because they leave a residue which causes rust and corrosion.

h. Check the bearing balls for indications of wear or pitting. If such indications are present, replace the bearing.

Note

No attempt to disassemble the swash plate bearing should be made by field activities. The bearing should be returned to an overhaul activity for any maintenance requiring removal of the bearing balls.

2-42. Disassemble gimbal ring as follows:

a. Remove the four bearing retainers (58) and pull the four bearings (59) from the bushings (60) in the ring.

b. Press the four bushings (60) from the ring. Support the ring so that it will not be deformed during the pressing operation.

NOMENCLATURE KEY FOR FIGURE 2-6

1	Collar Assembly
2	Scissor Collar Bolt
3	Collar Bearing
4	Phasing Arrow
5	Lubricator Fitting
6	Spacer
7	Flanged Bushing
8	Bushing
9	Scissors Arm Assembly
10	Scissors Arm Bolt
11	Upper Bearing Retaining Nut
12	Upper Link Bearing
13	Scissors Link Assembly
14	Lubricator Fittings
15	Lower Bearing Retaining Nut
16	Lower Link Bearing
17	Scissors Link Bolt
18	Rainshield
19	Rainshield-to-Upper Ring Bolt
20	Swash Plate Upper Ring
21	Pitch Link Bolt
22	Upper Grease Shield
23	Swash Plate Bearing Assembly
24	Rainshield-to-Upper Ring Nut
25	Washer
26	Swash Plate Bearing-to-Upper Ring Nut
27	Swash Plate Bearing-to-Upper Ring Bolt
28	Lower Grease Shield
29	Fillister Head Screw
30	Dowel Pin
31	Pitch Link
32	Pitch Link Terminal
33	Terminal Lock Nut
34	Pitch Link Shaft
35	Pitch Link Nut
36	Pitch Link Washer
37	Pitch Link Bearing
38	Washer
39	Pitch Link Shaft Nut
40	Pitch Link Bearing Housing
41	Pitch Link Bearing Lubricator Fitting
42	Universal Block-to-Pitch Link Bolt
43	Pitch Link Universal Block Assembly
44	Shoulder Type Guide Bolt
45	Trunnion Lubricator Fitting
46	Trunnion Assembly
47	Guide Bolt Washer
48	Trunnion Spacer
49	Trunnion Shim
50	Gimbal Ring
51	Trunnion Bevel Washer
52	Swash Plate Slider Actuating Link Assembly
53	Link Bearing
54	Bearing Retaining Nut
55	Washer
56	Swash Plate Bearing Trunnion Bolt
57	Bearing Retainer Bolt
58	Gimbal Ring Bearing Retainer
59	Gimbal Ring Bearing
60	Bearing Bushing
61	Trunnion Bolt Washer
62	Trunnion Spacer
63	Lower Ring Bushing
64	Swash Plate Lower Ring—Fwd Rotor
65	Lower Ring-to-Bearing Bolt
66	Beveled or Small OD Washer
67	Lateral Link Universal Block Assembly
68	Universal Block-to-Lower Ring Bolt
69	Swash Plate Lower Ring—Aft Rotor
70	Universal Block Bearing Retaining Nut
71	Universal Block Bearing
72	Universal Block Lubricator Fitting
73	Universal Block
74	Spacer
75	Swash Plate Assembly —Aft Rotor
76	Seal
77	Lock Washer
78	Bolt
79	Extension
80	Lubricator Fitting
A	Torque to 125–175 pound-inches
B	Torque to 80–100 pound-inches
C	Torque to 35–40 pound-inches
D	Torque to 20–25 pound-inches
E	Torque to 30–40 pound-inches
F	Torque to 60–80 pound-inches
G	Torque to 150–300 pound-inches
H	Torque to 30–40 pound-inches
K	Torque to 20–30 pound-inches

2-43. ASSEMBLY. (See figure 2-6.) During assembly of the rotor controls, install all close tolerance AN and NAS bolts with a coating of grease, Spec MIL-G-3278, to protect unplated shanks. Coat bearings with grease, Spec MIL-G-3278, before pressing them into housings.

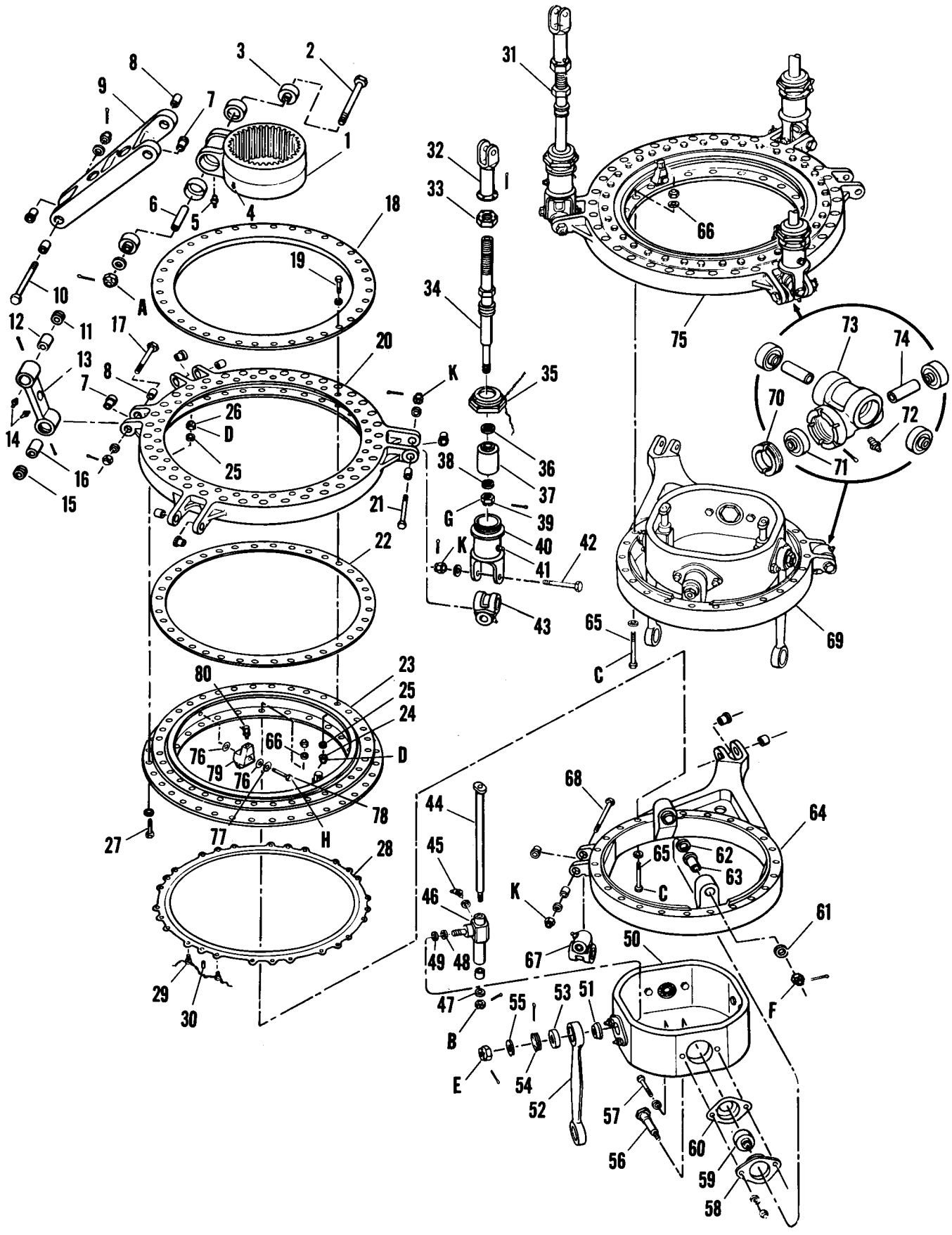

Figure 2-6. Rotor Controls

Note

The following procedure applies to either the forward or the aft rotor controls.

2-44. Assemble gimbal ring as follows:

a. Coat four bushings (60) with zinc chromate primer and press them into the bores in the gimbal ring (50). Support the ring so that it will not be deformed during the pressing operation.

b. Press four bearings (59) into the four bushings (60) and secure them in place with the four retainers (58). Place the retainer bolt (57) heads on the inside, using washers to protect the surface of the gimbal ring. Tighten the self-locking nuts to a torque of 10 pound-inches in excess of that required to turn the nut on the thread.

2-45. Assemble swash plate as follows:

a. Apply a light coating of grease, Spec MIL-G-3278, by hand to the ball paths through the clearance slots between the inner and outer races or by pressure greasing through the lubricator fittings, meanwhile rotating the bearing. Place the lower grease shield over the dowel pins on the outer race of the bearing and secure with 18 screws. Temporarily install the upper grease shield with six bolts to prevent contamination of the grease in the bearing and damage to the races. If the bearing has been obtained from supply in a new condition, remove both grease shields, wash the bearing in solvent, Federal Spec P-S-661, dry thoroughly, and apply a light coating of grease, Spec MIL-G-3278, to the ball paths as noted above and reinstall both grease shields.

b. Check the torque required to sustain rotation of the swash plate bearing both in a horizontal position and at a 20-degree angle. Maximum allowable torque for sustained rotation is 20 pound-inches at room temperature (60–90°F). Roughness or high spots in the bearings should cause no variation in torque greater than 50 per cent of the mean torque required to rotate the bearings.

c. Inspect both upper and lower swash plate rings and blend out any dents or nicks which may have resulted from rough handling. Attach the swash plate bearing (23) to the swash plate lower ring (64 or 69), using grease, Spec MIL-G-3278, on the mating surfaces.

CAUTION

Do not use wet zinc chromate primer in place of grease, Spec MIL-G-3278.

There is one offset bolt hole in the inner race of the swash plate bearing and in the swash plate lower ring for indexing purposes. Match up these two holes and install the 24 bolts (65) with heads down. Protect the lower ring by using aluminum washers under bolt heads. Insert beveled washers (66) under the nuts.

Note

Be sure the bevel on each washer (66) is in proper relation to the fillet on the swash plate bearing inner race. A more recent interchangeable washer is not beveled but has a smaller OD.

Torque bolts (65) to 35–40 pound-inches in the following sequence. Torque four bolts spaced equidistantly around the ring and recheck the bearing torque as described in step b. Repeat this procedure after torquing 12 equidistant retaining bolts and again after torquing all 24 retaining bolts.

d. There are two types of lubricator fitting extensions used on the swash plate bearing, as shown in figure 2-6. The straight lubricator fitting extension is assembled as follows:

1. Install the lubricator fitting extension (26) on the inner race of the swash plate bearing (23).

Note

The lubricator fitting extension (26) is supposed to bottom in the tapped hole in the bearing inner race. If this does not effectively seal the threads, then remove the extension and place a 1/4-inch aluminum washer on it so that the fitting will seal against the edge of the bearing race.

2. The lubricator fittings (24) are to be installed in the extensions and shimmed with the required number of gaskets (25) so that the tip end is 45 degrees from the straight up position when tightened.

CAUTION

Bearings cannot be properly greased unless the extension (26) is included and the lubricator fittings (24) are positioned 45 degrees from the straight up position.

The bolt type lubricator fitting extension is assembled as follows:

1. Screw the lubricator fitting (80) into the extension (79).
2. Insert the bolt (78) into the extension with a seal (76) on each side of the extension and a special lock washer (77) under the bolt head.

3. Screw the bolt into the swash plate bearing (23) and tighten to a torque of 30–40 pound-inches.

Note

If the bolt bottoms before it is tightened, place a thin washer between the bolt head and lock washer.

4. Bend one end of the lock washer (77) over the extension and the other end over the bolt.

e. Take the gimbal ring and measure the distance between the outer faces of the inner races of two opposing gimbal ring bearings (59). Measure the distance of the inner faces of the bushings in the swash plate lower ring trunnions. Determine the difference in the two measurements and grind each of two spacers (62) to a width equal to one-half this difference within a tolerance of +0.000 or −0.005 inch.

f. Slide the swash plate lower ring (64 or 69) and bearing assembly over the gimbal ring (50), holding the two newly ground spacers (62) in position. Do not attempt to force either assembly as the grinding of the spacers should provide a sliding fit. Place beveled washers (61) at the outboard ends of the swash plate ring. Secure the gimbal ring to the swash plate ring by inserting the two bolts (56) from inside the gimbal ring. At this point, check the end play of the gimbal ring in the swash plate ring along the trunnion axis. If end play exceeds 0.010 inch, the spacers are too thin and new ones must be ground. Install the nuts on the two bolts (56). Torque nuts to 60–80 pound-inches.

g. Remove six bolts retaining the upper grease shield of the swash plate bearing. Position the swash plate upper ring (40) over the upper grease shield, applying grease, Spec MIL-G-3278, to the mating surfaces.

CAUTION

Do not use wet zinc chromate primer in place of grease, Spec MIL-G-3278.

Inspect the bearing race and edge surfaces of the upper ring and blend out any dents or nicks since they can cause prestressing of the assembly. Place the rainshield (18) over the swash plate upper ring. There is one offset bolt hole in the outer race of the swash plate bearing, one in the grease shield, one in the swash plate upper ring, and one in the rainshield for indexing purposes. Match up these holes and install the attaching bolts, using thin washers under the nuts. Torque to 20–25 pound-inches in the following sequence.

1. Torque eight nuts (four lower and four upper) equidistantly spaced and recheck the bearing torque as described in step b.
2. Repeat the procedure after torquing 36 equidistant nuts.
3. Repeat the procedure after torquing all 72 retaining nuts.

CAUTION

When assembling the swash plate bearing to the upper and lower swash plate rings, care must be taken to assure that foreign matter, such as dirt and chips, does not remain on the mating surfaces.

h. Install the two trunnions (46) and guide bolts (44) in the slider assembly. Place a spacer (48) on each trunnion with its bevel toward the trunnion shoulder. Measure the distance between the outer faces of these two spacers. Measure the distance between the inner faces of the trunnion bearings (59) in the gimbal ring. Determine the difference in the two measurements and peel each of two laminated shims (49) equally to make up this difference.

Note

The shims (49) are made up of 0.002-inch laminations. The maximum permissible variation in equality of thickness between the two shims is 0.004 inch or two laminations.

i. Remove the trunnions (46) from the shoulder type guide bolts and slider assembly and insert them into the trunnion bearings in the gimbal ring, making certain that the spacers (48) are in place with beveled face against trunnion shoulder and that the shims (49) are between spacers and bearings.

j. Install a beveled washer (51) on each trunnion arm with its beveled surface toward the trunnion bearings in the gimbal ring. Then install a link assembly (52) on the arm of each trunnion with a washer and nut. Torque nuts to 30–40 pound-inches and secure with cotter pin.

Note

End play, or "sliding" play, of the link bearings (53) on the bolts is permissible up to a maximum of 0.030 inch. Any looseness found in the trunnion installation which was caused by wear in the shims due to improper shimming or torquing is cause for replacement of the shims.

k. Check the torque required to sustain rotation of the swash plate. A recommended method is as follows:

1. Attach a fish scale of known accuracy to one of the bolt holes for the pitch links (31) on the swash plate upper ring (20).

Note

A fish scale measuring from 0–5 or 0–10 pounds is preferred; the accuracy may be checked by suspending from the scale an accurately measured two-pound weight.

2. Pull on the fish scale so that the resultant force is at a 90-degree angle with a line projected from the swash plate's center of rotation through the attaching point. The maximum allowable reading on the scale is two pounds since there are 10 inches between the center of rotation to the point where the fish scale is attached, and 20 pound-inches is the maximum torque.

After successful completion of the torque check, fill the bearing with grease, Spec MIL-G-3278, using a hand operated grease gun, until excess grease shows between the lower grease shield and bearing outer race around the entire circumference of the bearing.

Note

In order to properly pack the bearing, it is necessary to rotate the swash plate outer ring constantly during the application of the lubricant.

l. If, prior to the packing of the bearing, the maximum allowable torque of 20 pound-inches is exceeded, it is possible that the excessive torque is the result of binding due to improper assembly procedure. Check both upper and lower grease shields for clearance with the bearing inner race. If clearance is sufficient and binding still exists, the swash plate assembly must be completely disassembled, degreased, and thoroughly dried.

Repeat the assembly steps a. through j. If after reassembly the maximum allowable torque of 20 pound-inches is still exceeded, the swash plate assembly should again be disassembled and the parts dimensionally checked for warpage or other distortion.

Note

When the helicopter has been stored or inactive for a period of 30 days or more, the swash plate bearings must be lubricated before operating the rotors.

2-46. Assemble drive scissors as follows:

a. Remove one seal from each of two bearings (3) if installing new bearings, and press the two bearings and the bearing spacer (6) into the drive scissors collar (1) with the unsealed side of each bearing facing inward.

Note

The spacer (6) is designed to prevent one of the bearings from seating against the shoulder of the liner in the collar. *Do not* apply pressure simultaneously to the outer races of both bearings when spacer is in contact with inner races.

b. Install the lubricator fitting (5) in the collar (1) and check the flow of grease, Spec MIL-G-3278, through the bearings, using a *hand* grease gun.

c. Press the two bearings (12 and 16) into the scissors link (13) and thread in their retaining nuts (11 and 15) with the special tools (22E5814-1 and 22E5815-1, figure 1-27). Insert the cotter pins which lock the retaining nuts as flush as possible to prevent interference.

d. If the bushings have to be replaced on the scissors arm assembly, coat them with wet zinc chromate primer before installing. Only the flanged bushings will require pressing in place, as the plain bushings are not a press fit.

e. Attach the scissors arm (9) to the scissors collar (1) so that the beveled surface of the arm will lie inboard and on the lower side when posi-

tioned on the helicopter. Torque the nut for bolt (2) to 125–175 pound-inches.

f. Attach the scissors link (13) to the scissors arm (9).

2-47. Assemble universal blocks as follows:

a. Measure the width of the inner races of the two bearings that will be inserted into the unthreaded bore end of the universal block (73). Subtract the two dimensions from 1.437 inches. Check the old bearing spacer to see if it is the same size as the resultant dimension. If necessary, grind a new spacer to replace the old one to the desired dimension.

b. If new bearings are to be used, remove one seal from each bearing. Insert the spacer and the two bearings (unsealed side toward spacer) into the universal block, packing the internal space with grease, Spec MIL-G-3278. The measurement between the outer faces of the inner races of the two bearings should be 1.437 inches with a tolerance of ± 0.001 inch.

Note

The spacer is designed to prevent one of the bearings from seating against the shoulder in the universal block. *Do not* apply pressure simultaneously to the outer races of both bearings when spacer is in contact with inner races.

c. If new bearings are to be used in the threaded bore end of the universal block, remove one seal from each bearing. Install one of the bearings (71) in the universal block (73) and screw the bearing retaining nut (70) in place, using special tool (22E5813-1, figure 1-27). The unsealed side of the bearing must face inward.

d. Pack the internal space of the block with grease, Spec MIL-G-3278, and insert the spacer (74) and the other bearing with its unsealed side facing inward.

Note

The spacer is designed to prevent the unrestrained bearing from seating against the shoulder in the block. *Do not* apply pressure to the outer race of this bearing after the spacer is in contact with the inner race.

e. Install lubricator fitting (72) and check flow of grease, Spec MIL-G-3278, through the bearings, using *hand* grease gun.

2-48. Assemble pitch links as follows:

a. If using a new bearing (37), remove one seal from the bearing and press the pitch link shaft (34) into the end of the bearing which still has the seal installed. Make sure the beveled washer (36) is installed on the shaft with the bevel toward the shoulder on the shaft before pressing shaft into bearing. Retain the bearing with the nut (39) and washer (38). Torque nut (39) to 150–300 pound-inches and secure with a cotter pin.

b. Pack the lower portion of the pitch link housing (40) to a 1/2-inch depth of grease, Spec MIL-G-3278; then press the shaft and bearing assembly into the housing and secure with the nut (35).

c. Attach universal block (43) to the pitch link housing with its lubricator fitting (72) facing the same side as the lubricator fitting (41) in the link housing.

d. Screw the nut (33) and the terminal (32) on the pitch link shaft, adjusting the terminal to give an over-all length of 12 inches from center of bolt hole in terminal to center of bolt hole in universal block.

2-49. INSTALLATION. (See figure 2-6.)

a. If the small rotor shaft rainshield and thrust collar located on top of the slider assembly have been removed, replace both before installing the swash plate assembly.

b. Mount the swash plate assembly over the rotor shaft and the slider, and rotate the assembly until the trunnions (46) line up with the trunnion guide bolt holes in the slider. Insert the two guide bolts (44) through the slider and trunnions. Install a special trunnion guide bolt washer (47) and nut on each guide bolt, and torque nuts to 80–100 pound-inches. Secure each nut with cotter pin, and check the motion of the swash plate trunnions on the guide bolts for freedom from binding.

c. Coat the splines of the rotor shaft with grease, Spec MIL-G-3278, and install the drive scissors assembly (1, 9, and 13).

d. Replace the bushings, as necessary, and install in the upper ring (20) with wet zinc chromate primer.

e. Place the drive scissors link (13) between the lugs of the swash plate upper ring (20), and install the attaching bolt (17).

f. Attach each of the three pitch link assemblies (31) to the upper ring of the swash plate with close tolerance bolts (21). Torque the nuts to 20–30 pound-inches.

Note

Link assemblies must be attached with lubricator fittings facing outward.

g. Attach a fourth universal block (67) to the lower swash plate ring (64 or 69) at the short set of lugs with a close tolerance bolt (68). Torque the nut to 20–30 pound-inches.

h. Attach the lateral link (22, figure 2-19, sheet 2) to the universal block (67, figure 2-6), making sure the proper close tolerance bolt (23, figure 2-19, sheet 2) is installed. Torque the nut to 20–30 pound-inches.

WARNING

Bolt (23, figure 2-19, sheet 2) will be installed with head inboard and one thin steel washer under nut so as to prevent any interference with the lower ring (64 or 69, figure 2-6).

i. Attach the longitudinal link to the lower ring (64 or 69) at the longitudinal arm.

j. Attach the two link assemblies (52) to the upper controls.

k. It is recommended that the swash plate be checked for restenciling of the phasing arrows and lubrication warning. The swash plate is then checked for the full range of movement as listed in Flight Controls Rigging Procedure.

l. Ascertain that the lubricator fittings are positioned properly. Lubricate as directed in Special Service Notes (figure 1-26).

m. Install rainshield (if forward rotor) or hub spacer (if aft rotor), the hub assembly, and the rotor blades.

2-49A. TESTING. When the swash plate is installed on the helicopter, check the serviceability of the bearing as follows:

a. Disconnect the swash plate drive arm and the pitch links.

b. Turn the swash plate by hand to check for freedom of movement. If excessive roughness or binding is found and/or operation is doubtful, check the torque as specified in paragraph 2-45 k.

CAUTION

To ensure accurate torque readings, check the torque immediately following a 30-minute ground run-up or immediately after a flight.

c. Reconnect the swash plate drive arm and the pitch links.

2-49B. COLD WEATHER OPERATIONS. The rotor controls must be free of any snow or ice accumulations. Water must be wiped up immediately to prevent it from freezing and causing the rotor controls to jam.

2-50. FLIGHT CONTROLS.

CAUTION

All parts have been properly identified by the contractor. However, if it becomes necessary to reidentify parts, extreme care should be used. Because of the possible build-up of stress concentrations, impression stamping or permanent etching must not be used on any parts unless specific instructions are given in this handbook. The use of rubber ink stamp or the tagging of parts is acceptable.

2-51. DESCRIPTION. (See figures 2-7 and 2-8.) The helicopter's flight control system consists of the cockpit controls (cyclic stick, directional control pedals, collective pitch levers, and trim mechanism), the lower differential controls, the upper flight controls, and the connecting cables and pulleys. The lower differential controls are located beneath the cockpit flooring. The upper flight controls are located at the forward and aft rotors. The component parts are linked, coordinated, and synchronized to effect cyclic pitch, collective pitch, and longitudinal trim through operation of the cockpit controls by the pilot. Movement of the controls is accomplished by four hydraulic actuators which reduce the amount of force required to move the cockpit controls. Positioning of the directional and cyclic controls when the hydraulic flight controls are functioning is accomplished by means of adjustable magnetic brakes. Mechanical over-riding of these brakes is permitted by centering springs which connect the brakes to the various controls. On the H-21B helicopter, an electrically operated auto-pilot is installed.

Note

Operation of the auto-pilot system in the H-21B helicopter is prohibited at the present time. The cable assemblies of the system have been disconnected and removed from the helicopters and will be supplied as loose fly-away equipment. All remaining components of the auto-pilot system will remain installed.

Three servo units, connected to the longitudinal, lateral, and directional controls are included in the auto-pilot system.

Note

Whenever a flight component or a rotor transmission is to be removed, always disconnect the bungees and then insert the rigging pins to lock out the controls. Certain control rod assemblies incorporate reinforced rods and female type end fittings. Check the push rods to see that the reinforced type rods have been incorporated.

2-52. TROUBLESHOOTING.

Trouble	Cause	Remedy
Cockpit controls locked	Rigging pins installed	Remove the pins
	Pitch locks engaged	Disengage the locks
	Collective pitch down lock engaged	Disengage down lock
	Collective pitch friction lock too tight	Loosen friction sleeve

Trouble	Cause	Remedy
Cockpit controls locked. (Cont)	Collective pitch lever difficult to raise or lower while making pitch changes	Check rigging of forward and aft bungees
	Cyclic stick difficult to move when displaced longitudinally	Check rigging of longitudinal bungee
Controls binding	Foreign articles jamming controls	Inspect and remove obstructions
	Collective pitch lever binding	Check collective pitch lever assembly for difficulty. Clean parts and keep collective pitch lever tube clean
		Check collective pitch hydraulic actuator for malfunctioning and replace if necessary
		Check both collective pitch bungees for malfunctioning and replace if necessary
		Check rigging of both collective pitch bungees
		Check for malfunctioning of rotor controls
	Cable guards rubbing cables	Inspect guards for swelling, or for bent brackets and replace defective part
	Excessive corrosion preventive on cables	Remove excess preventive
	Cable off pulleys	Remount cables and inspect guards. Retension cables
	Cables rubbing structure	Correct obstruction
	Cable tension too high	Check and adjust tension
	Defective bearings in controls	Check, replace, or lubricate as required
	Split pulley sheave	Replace pulley
Vibration of controls in flight	Cables tension too low	Check and adjust tension

Note: Additional causes of vibration may be found in the Trouble-shooting paragraphs beginning this section.

2-53. COCKPIT CONTROLS.

Note

If any cables require replacement, the old cable, or a piece of string routed as the old cable was routed, can be used as a pilot for the replacement cable length. This measurement is accurate enough since the adjustment links in the cable system are used to accommodate variations in cable lengths.

2-54. DESCRIPTION. (See figure 2-9.) The cockpit controls consist of two cyclic control sticks (3) of the conventional type mounted in the normal position with respect to the side-by-side cockpit seating arrangement, two sets of adjustable foot pedals (1) for directional control located in the conventional position, and two collective pitch levers (7) mounted in a convenient position to the left of each seat. The longitudinal stick positioner (5) is built into the console and can be reached from either seat.

2-55. CYCLIC STICKS.

2-56. DESCRIPTION. (See figure 2-10.) The pilot's and co-pilot's cyclic sticks are metal tubes provided with hard rubber grips. Incorporated in the pilot's grip are switches for the centering spring magnetic brakes, ICS communication, rescue hoist operation and, on H-21B and H-21C helicopters, auto-pilot disengagement. The co-pilot's grip is similarly equipped except that the hoist operating switch is not included and the co-pilot's grip on H-21B helicopters only contains the auto-pilot disengage switch. The cyclic control sticks effect the longitudinal and lateral control of the forward and aft rotors. A position indicator (24, figure 2-10), located on the cockpit floor to the right of the console, provides the pilot with a means of determining the amount of longitudinal cyclic control he is applying. Access to the cyclic control stick assembly and longitudinal position indicator is gained by removing the panel located directly beneath the assembly, on the underside of the fuselage nose section.

2-57. REMOVAL. (See figure 2-10.) The pilot's or co-pilot's cyclic stick is removed as follows:

a. Break the cannon plug electrical connection.

b. Remove the bolt which holds the stick (1) in the socket assembly (19). Remove the stick.

2-58. The horn and socket assemblies may be removed as follows:

a. Remove the boot (20). Hold the cyclic stick forward against the stop and, using a grease pencil, mark the position of the needle (23) on the scale (24) of the stick position indicator. This will aid in adjusting the longitudinal stop at installation and eliminate the necessity of making extensive measurements.

b. Disconnect the rod assembly (18) between the two socket assemblies (19 and 8).

c. Remove the rod assembly which connects the collective pitch actuator to the idler bellcrank.

d. Remove the four bolts and two shims (10) which attach the horn assemblies (21 and 6) to the tube (17).

e. Remove the horn and socket assemblies.

PULLEYS & BELLCRANKS SEPARATED FOR CLARITY

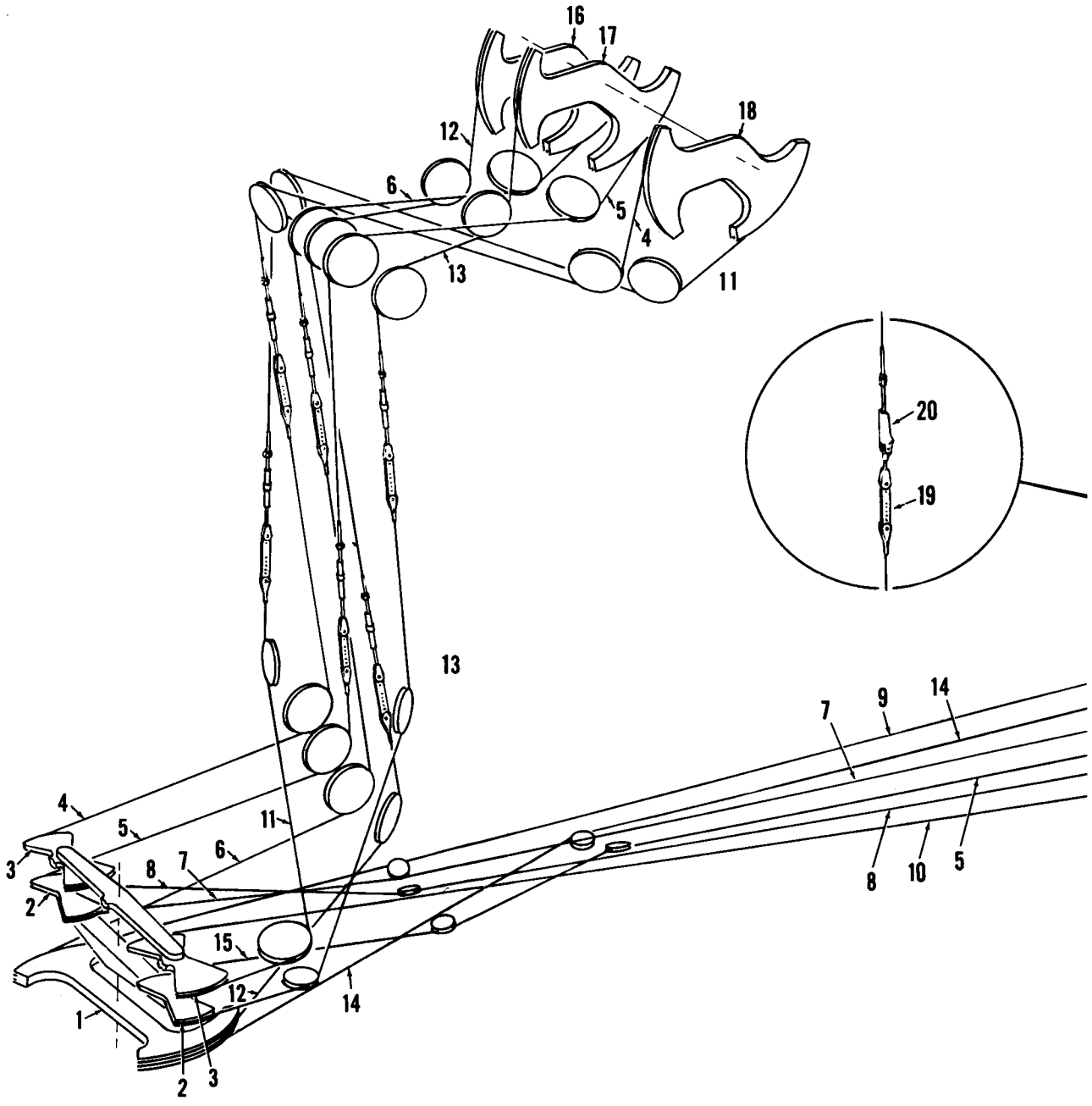

Figure 2-7. Flight Control System (Sheet 1 of 2)

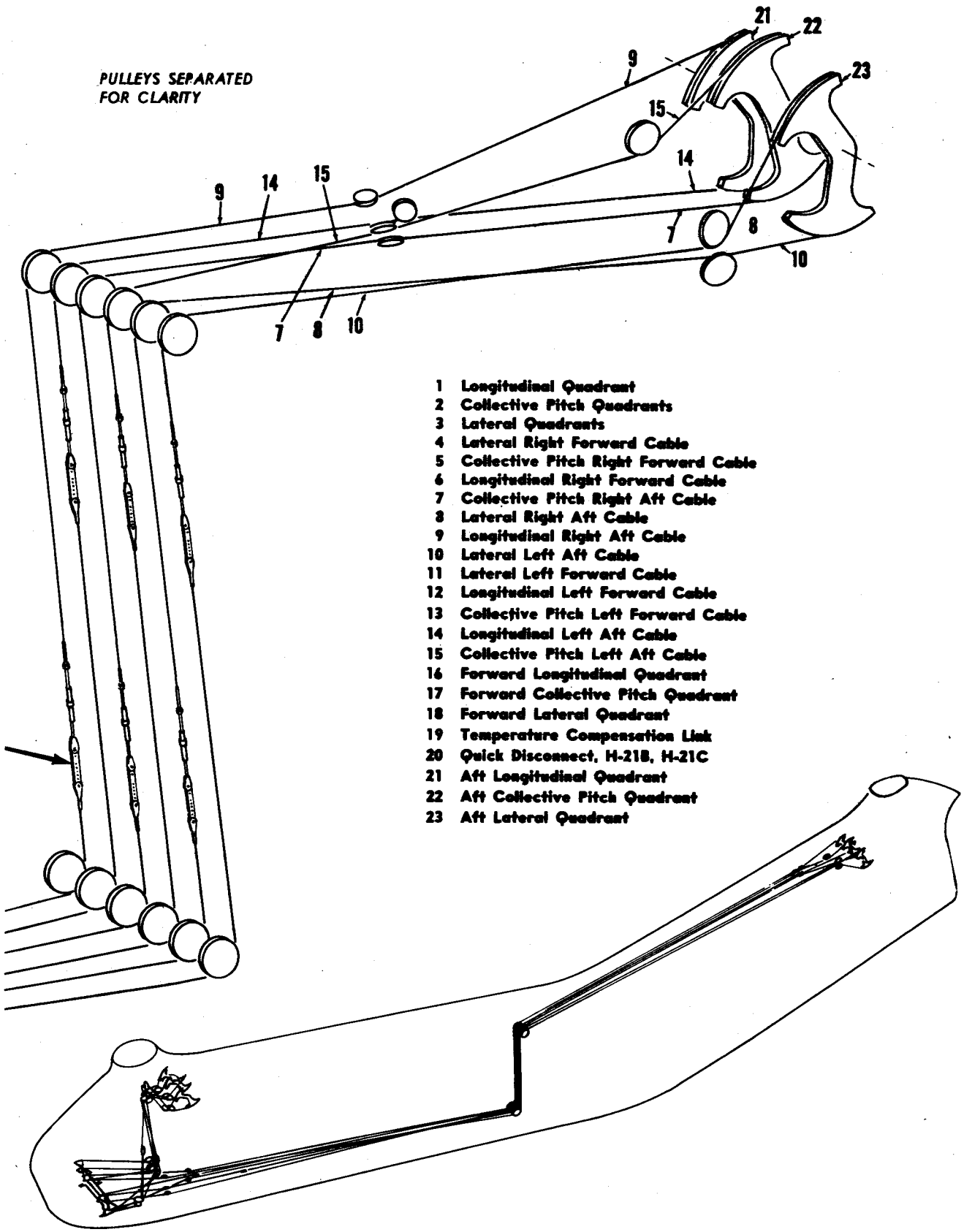

Figure 2-7. Flight Control System (Sheet 2 of 2)

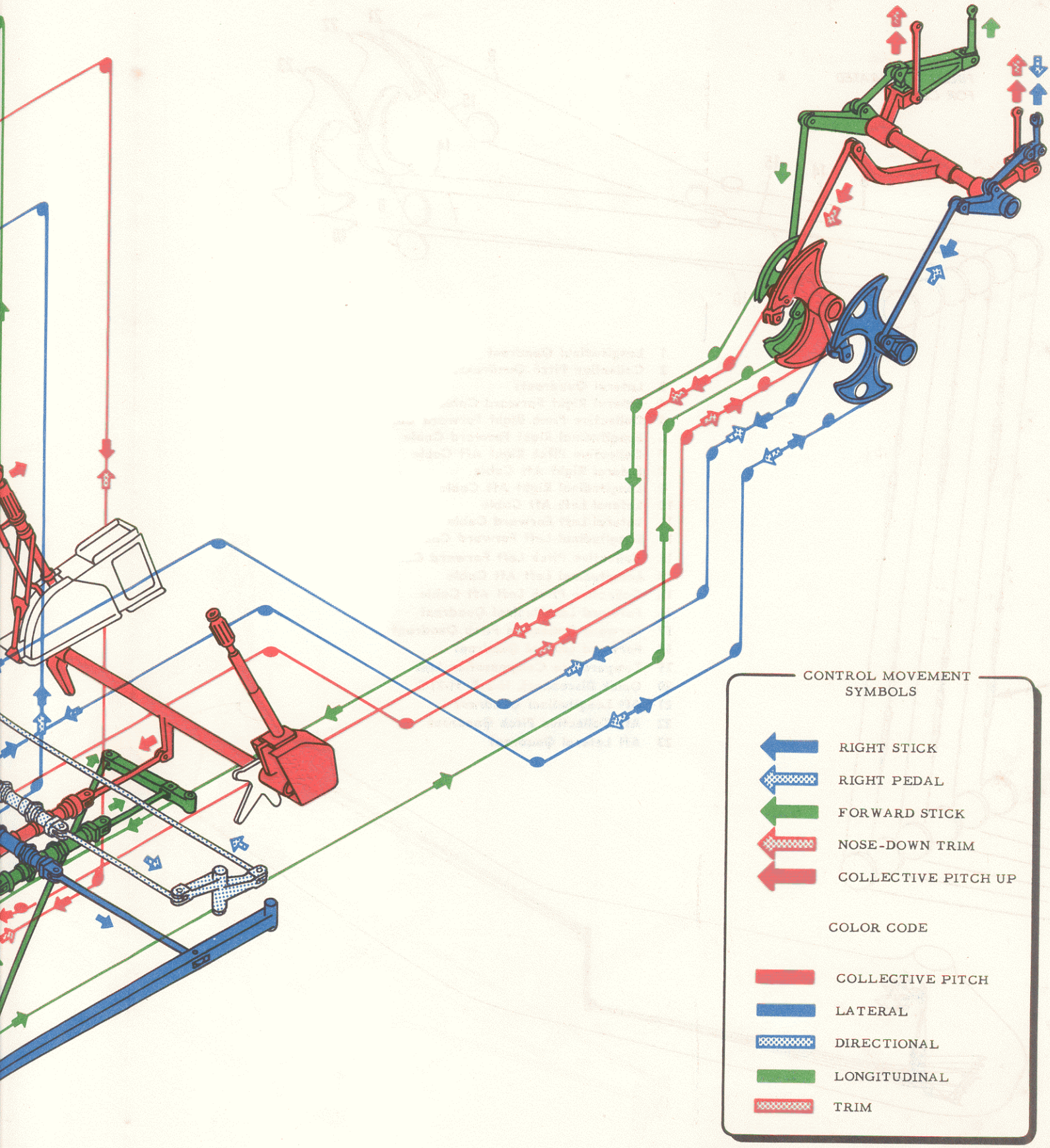

Figure 2-8. Flight Control System Schematic

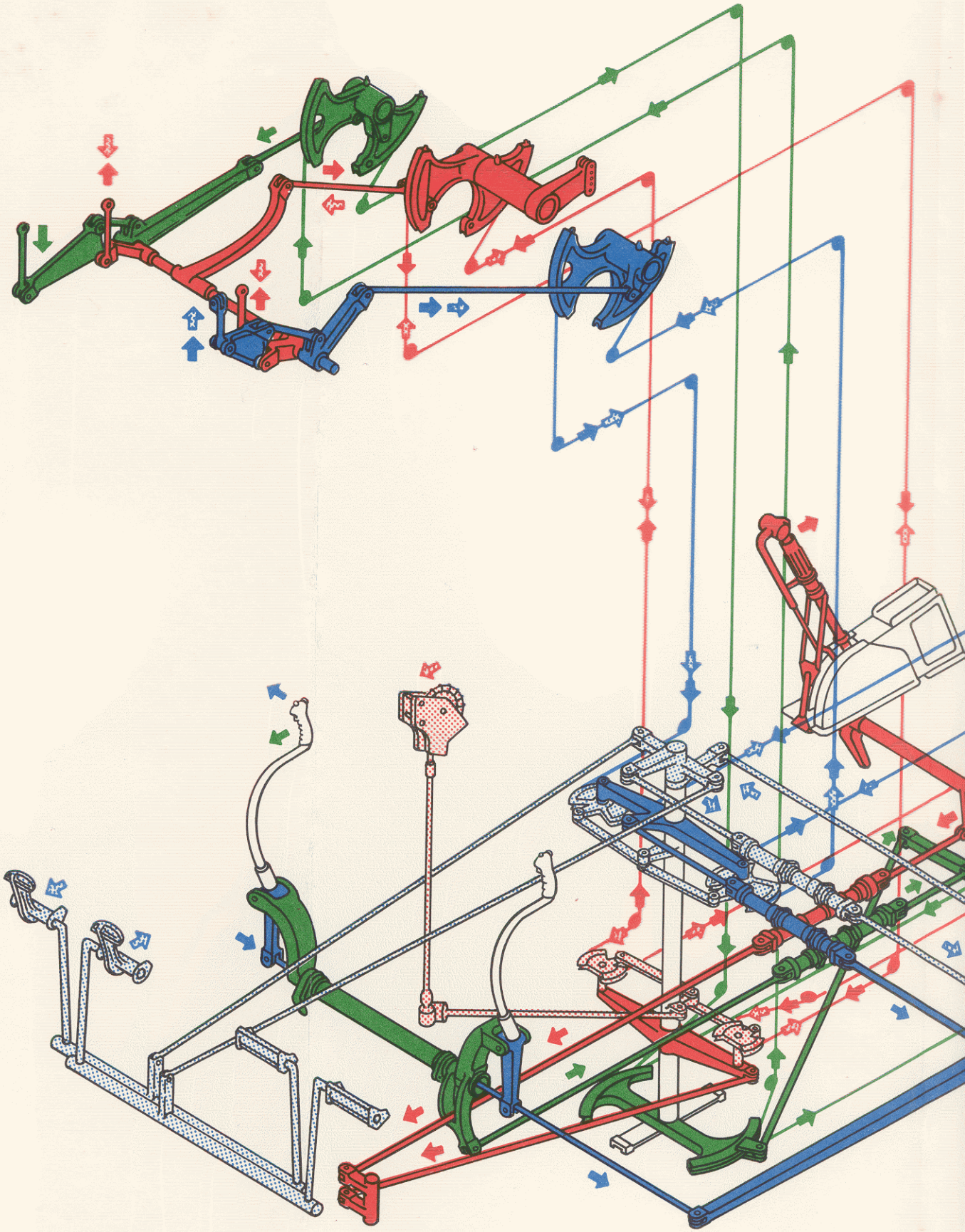

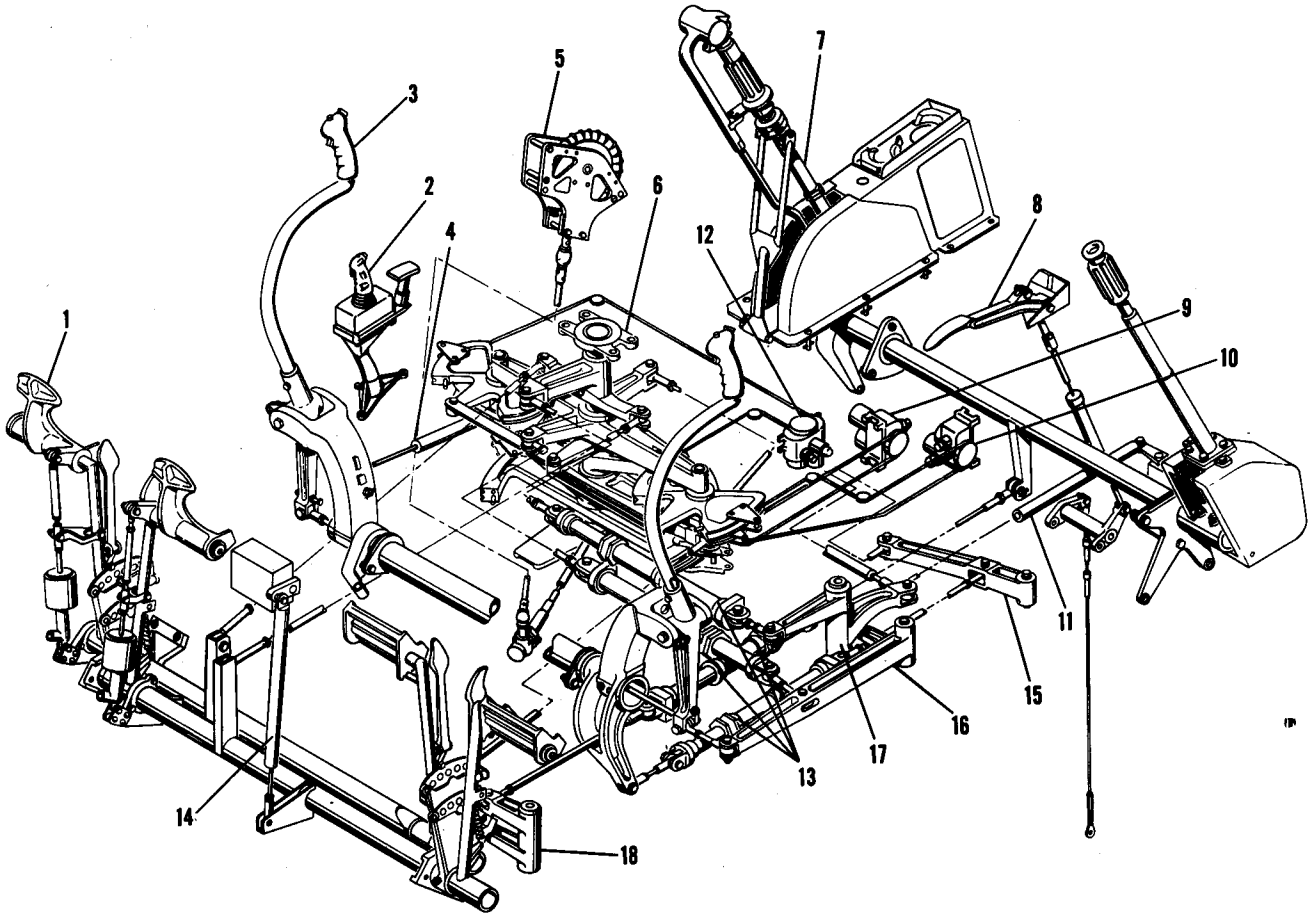

1 Directional Pedals Assembly
2 Automatic Pilot Controller, H-21B
3 Cyclic Stick
4 Longitudinal Centering Spring
5 Longitudinal Stick Positioner
6 Lower Differential Controls
7 Collective Pitch Lever
8 Nose Wheel Lock Lever
9 Directional Servo Motor, H-21B
10 Longitudinal Servo Motor, H-21B
11 Lateral Centering Spring
12 Lateral Servo Motor, H-21B
13 Hydraulic Actuators
14 Directional Centering Spring
15 Longitudinal Idler Bellcrank
16 Lateral Idler Bellcrank
17 Directional Idler Bellcrank
18 Collective Pitch Idler Bellcrank

Figure 2-9. Cockpit and Lower Differential Flight Controls

The connecting tube assembly is detached from the structure by removing the four bolts which hold the two bearing housings (13) to the structure. To remove the stick position indicator needle (23) from the torque tube (17), remove the two bolts which hold the clamp sections together. The scale (24) of the indicator is fastened to the cockpit floor and may be removed after removing the six attaching screws.

2-59. DELETED.

2-60. INSTALLATION. (See figure 2-10.) To install the cyclic stick assemblies, reverse the removal procedure. Rig controls as outlined in Flight Controls Rigging Procedure, Section II.

2-61. COLLECTIVE PITCH LEVERS.

2-62. DESCRIPTION. (See figure 2-11.) The pilot's and co-pilot's collective pitch levers consist of a light alloy tube and a cast gear housing. The two housings are connected by torque tubes. A molded motorcycle hand grip is mounted on the end of each lever to control throttle settings. The pilot's lever also contains a throttle lock, a collective pitch friction lock, and a collective pitch down lock. A switch assembly is mounted on the pilot's lever and contains landing light, search light, and engine starter control switches. The collective pitch levers control the pitch change of each blade simultaneously. They also actuate a throttle-collective pitch synchronization unit which adds engine power with pitch increase, thereby helping to maintain a constant rpm. The throttle grip on each lever can be rotated to vary throttle setting. When the throttle is fully closed, the white line on the throttle control grip will line up with the white line on the lever.

CAUTION

In the event of a premature clutch engagement, the entire collective pitch control system and lever installation must be inspected for damage.

When the rotors are in a static or low rpm condition, forces acting on the collective pitch lever may cause it to spring to the "full up" position. To prevent this, be sure that the collective pitch down lock is fully engaged prior to running-up the engine.

2-63. REMOVAL. (See figure 2-11.) Remove the collective pitch levers assembly as follows:

a. Remove access panel on underside of fuselage beneath collective pitch levers assembly.

b. Remove lower aft window panel on left side of fuselage.

c. Remove co-pilot's collective pitch lever shield assembly.

Note

The co-pilot's collective pitch lever aft attachment bolts are used to attach the shield assembly and are slotted so that they can be held with a screwdriver when removing or installing the retaining nuts.

d. Remove control cable from throttle quadrant assembly.

e. Disconnect link between collective pitch torque tube and hydraulic actuator.

f. Remove the cover assemblies around the pilot's collective pitch lever.

g. Break cannon plug connection to pilot's collective pitch lever switches.

h. Remove yoke assembly from pilot's collective pitch lever.

i. Remove torque tube bearing housing mounting bolts and lower the assembly as far as possible to gain access to lower end of pilot's collective pitch lever.

j. Remove pilot's collective pitch lever from torque tube. See Disassembly — Levers from Torque Tubes.

k. Lower torque tube and lever assemblies from structure.

2-64. DISASSEMBLY — LEVERS FROM TORQUE TUBES. (See figure 2-11.)

a. Disconnect the link assembly (41) from the bellcrank on the co-pilot's lever and from the bellcrank (42) on the throttle torque tube (28).

b. Remove the taper pin (43) which secures the bellcrank to the torque tube and slide off the bellcrank.

c. Disconnect the link assembly (3) from the bellcrank on the pilot's lever and from the bellcrank (21) on the throttle torque tube.

d. Disconnect the link assembly (15) from the bellcrank on the pilot's lever and from the yokes (17).

e. Disconnect the yokes from the cam assembly (2).

f. Remove the nut which secures the quadrant assembly (9) to the throttle torque tube (28) and slide the quadrant and yokes, as an assembly, from the torque tube.

g. Remove the taper pin (20) which secures the bellcrank (21) to the throttle torque tube and remove the bellcrank.

h. Remove the cam assembly (2) from the pilot's lever.

i. Tap the throttle torque tube (28) out of the pilot's lever end of the collective pitch torque tube (33).

j. Remove the bearing (26) and grease retainers (27) from the co-pilot's lever end of the torque tube (33).

k. Remove the spacers (24) and special bolts which secure the pilot's and co-pilot's levers to the torque tube (33) and slide the levers off each end of the tube.

l. Remove the lock ring (39) and nut (38) from the collective pitch torque tube (33) and press the bearing housing assembly (37) from the tube.

m. Press out only those bearings and bushings from the bellcrank, quadrant, etc, which require renewal.

2-65. DISASSEMBLY—INDIVIDUAL LEVERS. (See figure 2-12.) The following procedure covers disassembly of the pilot's collective pitch lever. The applicable portions of the procedure can be used to disassemble the co-pilot's lever which is similar in design to the pilot's lever.

a. Remove the switch housing (1) and conduit (7) from the assembly.

b. Separate the lever tube assembly (33) from the gear housing assembly (55) by removing the bolts which fasten the retainer (35) to the gear housing.

c. Remove the gear housing cap (43).

d. Remove the bellcrank (52).

e. Remove the bolt which secures the bevel gear (42) to its shaft and tap the shaft out of its bearings, bevel gear, and shim (41). Lift the bevel gear and shims from the housing.

f. Remove the nut which secures the pinion gear (44) to its shaft and pull the pinion gear and its shims (47) from the shaft.

g. Pry the pinion gear key (45) from the shaft and push the shaft out the hole which accommodates the lever tube.

h. Thread the bearing retainer nut (46) from the retainer sleeve which is shrunk into the housing and remove the two pinion gear shaft bearings (38), one from each end of the sleeve, and remove the bearing spacer (39).

i. Remove the bevel gear shaft bearing retainer (54) from the side of the gear housing and press the two bearings (38) from the housing.

j. The four bushings (56) and the bushing (57) may be pressed out of the housing if renewal is required.

2-66. The steps which follow cover disassembly of the lever tube itself:

a. Screw the throttle friction knob (25) from the throttle tube and lift the three spring washers (23) off the tube.

1 Cyclic Stick Assembly
2 Spacer
3 Bearing
4 Bushing
5 Bushing
6 Horn Assembly
7 Retainer
8 Socket Assembly
9 Bushing
10 Shim
11 Bolt
12 Bushing
13 Housing
14 Retainer
15 Bearing
16 Plate
17 Tube
18 Rod Assembly
19 Socket Assembly
20 Cyclic Stick Boot, two
21 Horn Assembly
22 Link Assembly
23 Stick Position Indicator Needle
24 Stick Position Indicator Scale

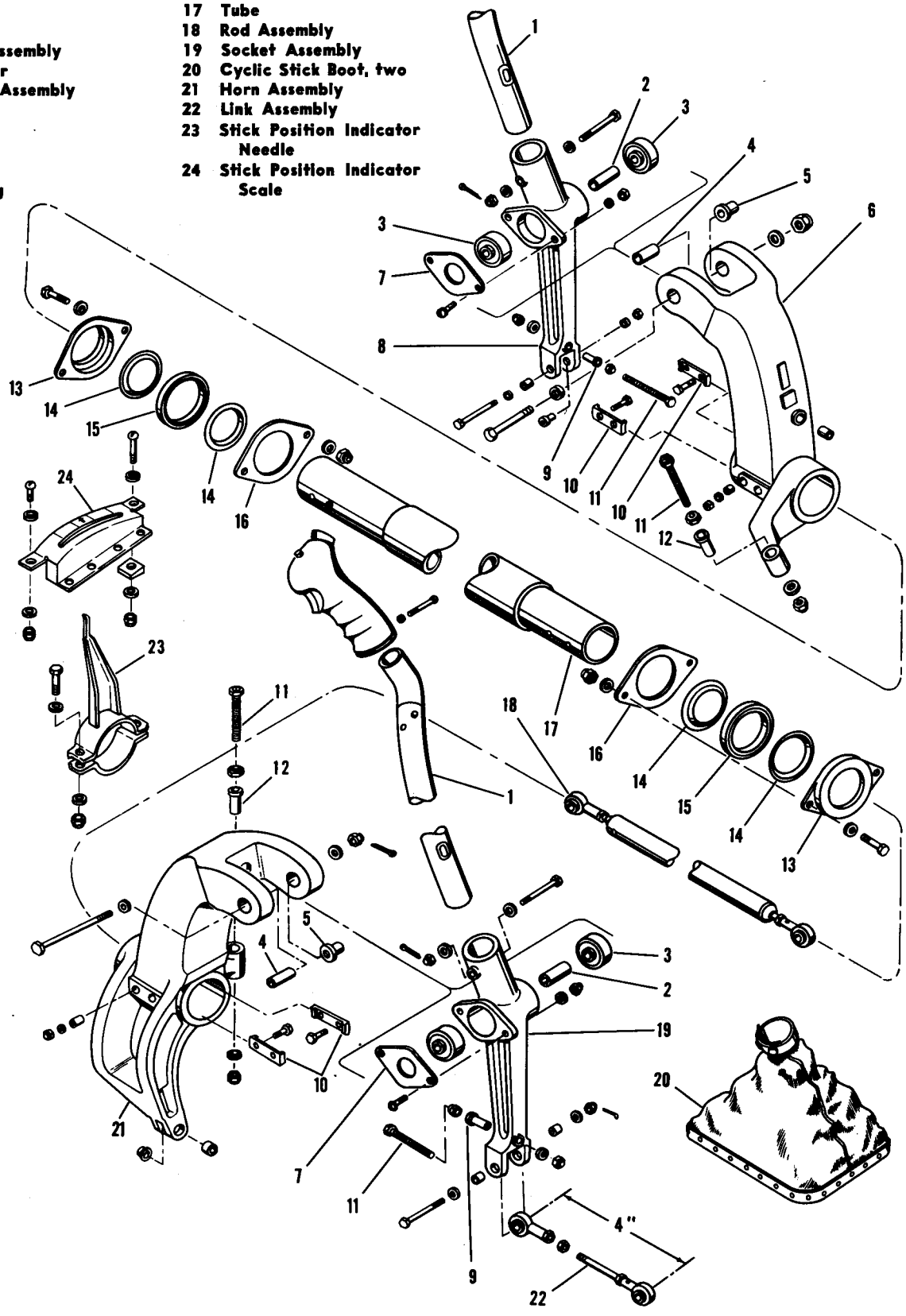

Figure 2-10. Cyclic Stick

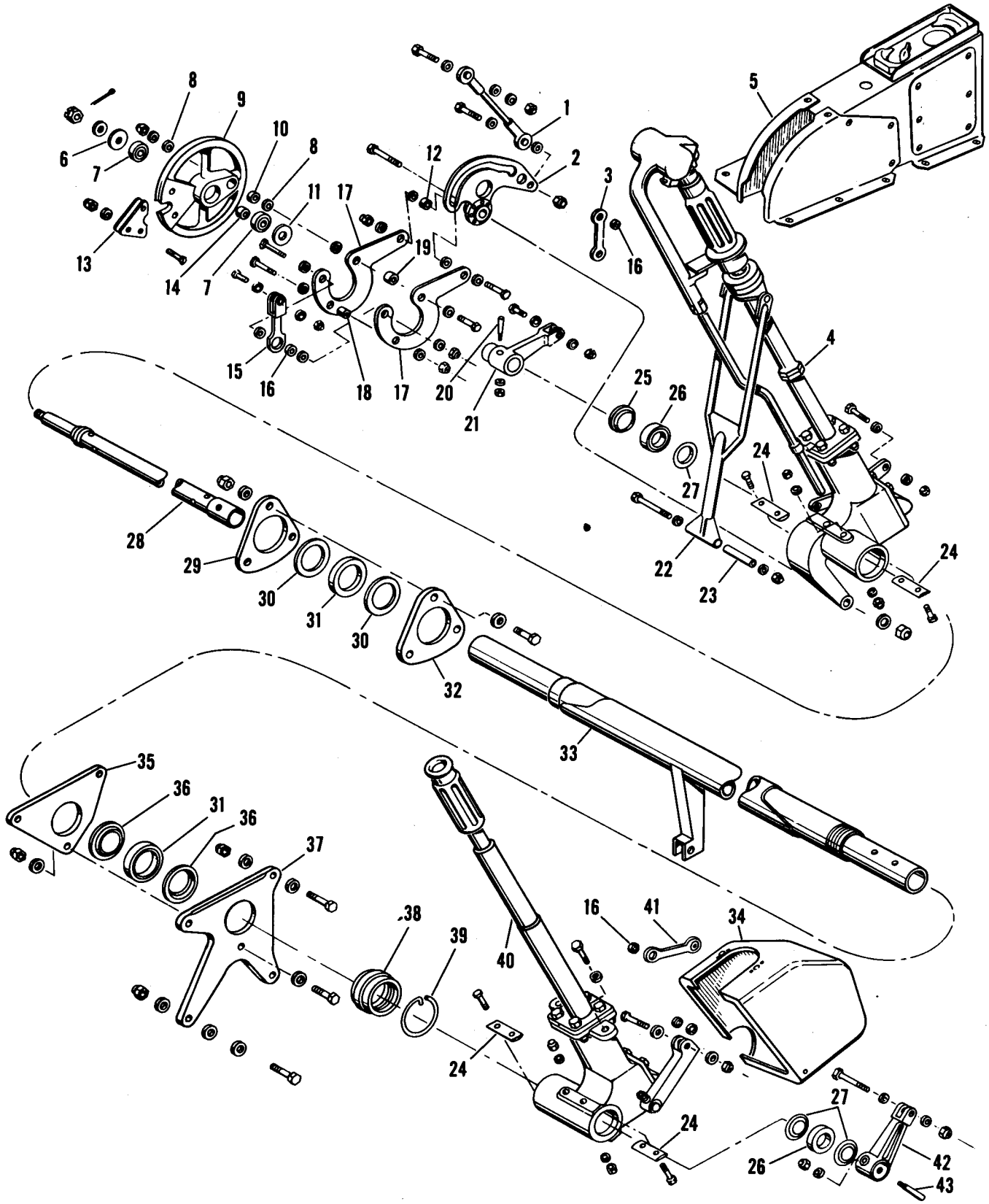

Figure 2-11. Collective Pitch Levers

NOMENCLATURE KEY FOR FIGURE 2-11

1	Rod Assembly	23	Bushing
2	Cam Assembly	24	Spacer
3	Link	25	Guard
4	Pilot's Collective Pitch Lever	26	Bearing
5	Shield Assembly—Pilot's C.P. Lever	27	Grease Retainer
6	Grease Guard	28	Throttle Torque Tube Assembly
7	Bearing	29	Bearing Retainer
8	Bearing	30	Grease Retainer
9	Quadrant, Throttle	31	Bearing, two
10	Spacer	32	Bearing Housing
11	Grease Retainer	33	Collective Pitch Torque Tube Assy
12	Bearing	34	Shield Assembly Co-Pilot C.P. Lever
13	Retainer	35	Retainer
14	Spacer	36	Grease Retainer
15	Link	37	Bearing Housing
16	Bearing	38	Lock Nut
17	Yoke	39	Lock Ring
18	Spacer	40	Co-Pilot's C.P. Lever
19	Spacer	41	Link
20	Taper Pin	42	Bellcrank
21	Bellcrank	43	Taper Pin
22	Yoke Assembly		

b. Remove the screw (20) and the bolt (19) which secure the twist grip to the throttle tube and slide off the two cones (22 and 21), the grip, and the switch support bracket (16).

c. Rotate the collective pitch down latch (14) so that the opening in it exposes the set screw (11) in the down limit stop and loosen the screw.

d. Screw this latch and limit stop assembly from the lever.

e. Remove the lock ring (15) from the latch to release the limit stop (12) and the spring (13).

f. Remove the lock ring (10) from the collective pitch friction lock nut (9) and screw the nut from the sliding sleeve (30).

g. Slide the flat washers (8), the spring washers (36), and the cone (26) from the lever.

h. Remove the sliding sleeve and yoke assembly from the lever.

i. Tap the friction sleeve (27) from the sliding sleeve (30).

j. Remove the pins (29) which secure the two trunnions (28) to the sliding sleeve and remove the trunnions and the yoke.

k. Remove the up limit stop (31) and check nut (32) to remove the retainer (35) from the lever.

l. Remove the throttle tube (24) from inside the lever tube (33) by removing the castellated nut from its lower end.

2-67. ASSEMBLY — INDIVIDUAL LEVERS. (See figure 2-12.) The following procedure covers assembly of the pilot's collective pitch lever. The applicable portions of the procedure can be used to assemble the co-pilot's lever which is similar in design to the pilot's lever.

Note

During assembly, the bevel and pinion gears are to be lubricated with Spec MIL-G-3278 grease.

a. Insert the throttle tube (24) in the lever tube (33) and secure it in place with the castellated nut which threads onto its lower end.

b. Install the retainer (35), check nut (32), and up limit stop (31) on the lever tube.

c. Attach the yoke (49) to the sliding sleeve (30) by inserting the two trunnions (28). Secure the trunnions with the two pins (29) and peen both ends of the pins.

d. Tap the friction sleeve (27) into the sliding sleeve.

e. Slide the sleeves and yoke assembly on the lever tube.

f. Slide the cone (26), the spring washer (36) and the flat washers (8) on the lever.

g. Screw the friction lock nut (9) on the sliding sleeve and secure it with the lock ring (10).

h. Insert the spring (13) and down limit stop (12) in the collective pitch down latch (14) and lock the assembly together with the lock ring (15).

i. Screw this latch and limit stop assembly on the lever.

Note

The limit stop set screw (11) is not tightened until the lever assembly is installed and the flight controls rerigged. Flight Controls Rigging Procedure gives the correct procedure for setting the up and down limit stops.

j. Slide the switch support bracket (16), the twist grip, and the two cones (21 and 22) on the lever.

k. Install the bolt (19) and screw (20) to secure the twist grip on the throttle tube.

l. Slide the three spring washers (23) on the tube and screw the throttle friction knob (25) on the tube to hold them in place.

Note

Binding of the throttle tube (24) may occur at low or normal temperatures. At low temperatures this binding is due to the difference in shrinkage, as temperature decreases, between the steel collective pitch lever and the dural throttle tube. Binding may also occur from flaking of the cadimum plating on the friction lock end of the throttle tube.

m. To correct the binding due to unequal temperature shrinkage, remove the rivets which

attach the shaft extension to the lower end of the throttle tube. Reposition the shaft so that a space of 0.025 ±0.005 inch exists between the end of the tube and the collar on the shaft extension. Redrill the tube and shaft at 90 degrees to the old rivet locations and insert two rivets.

n. Should flaking of the upper fitting occur, remove the two rivets attaching the fitting to the throttle tube and remove the fitting. Replate the ends of the fitting to a distance of 0.03 inch from the center shoulder per Federal Spec QQ-P-416. Replace the fitting in the throttle tube and rerivet with two rivets.

Note

To prevent damage to the rivet holes, carefully remove the rivets which attach the fitting to the throttle tube.

2-68. The steps which follow cover assembly of the gear housing:

a. Coat new bushings (56 and 57) with wet zinc chromate primer before pressing them into the gear housing.

b. Press the two bevel gear shaft bearings (38) into the housing and install the bearing retainer (54) on the side of the housing.

c. Install the bearing spacer (39) and the two pinion gear shaft bearings (38) into the bearing retainer sleeve which is shrunk into the housing, one bearing into each end of the sleeve.

d. Screw the bearing retaining nut (46) into the sleeve and safety with a cotter pin (cotter pin head on the inside).

e. Insert the pinion gear shaft (37) through the hole in the housing which accommodates the lever tube, then tap the pinion gear key (45) into the shaft.

f. Install the shims (47) and pinion gear (44) on the shaft and lock in place with the nut.

g. Place the bevel gear (42) and its shims (41) in the housing. Tap the bevel gear shaft (40) into the bearings (38), the bevel gear (42), and the shims (41). Bolt the bevel gear to the shaft.

Note

At this point, check the mesh and backlash of the bevel gear and pinion gear. The gears should mesh freely with a maximum backlash of 0.003 inch. If not satisfactory, add or remove the necessary amount of shims (41 and 47) from behind the gears.

h. Install the bellcrank (52) on the bevel gear shaft and install the gear housing cap.

i. Attach the lever tube assembly to the gear housing assembly by installing the bolts which fasten the retainer (35) to the housing.

NOMENCLATURE KEY FOR FIGURE 2-12

1	Switch Support Housing	28	Trunnion
2	Starter Switch	29	Trunnion Lock Pin
3	Bearing	30	Sliding Sleeve
4	Searchlight Toggle Switch	31	Up Limit Stop
5	Search Light Selector Switch and Selector Button	32	Limit Stop Check Nut
		33	Pilot's Lever
		34	Switch Housing Clip
6	Landing Light Toggle Switch	35	Retainer
		36	Spring Washer
7	Conduit	37	Pinion Gear Shaft
8	Friction Lock Washer	38	Bearing
9	Friction Lock Nut	39	Bearing Spacer
10	Lock Ring	40	Bevel Gear Shaft
11	Limit Stop Set Screw	41	Bevel Gear Shim
12	Down Limit Stop	42	Bevel Gear
13	Latch Spring	43	Gear Housing Cap
14	Down Latch	44	Pinion Gear
15	Lock Ring	45	Gear Key
16	Switch Support Bracket	46	Bearing Retainer Nut
17	Key	47	Pinion Gear Shim
18	Throttle Grip Assembly	48	Yoke Bushing
19	Bolt	49	Yoke Assembly
20	Screw	50	Bearing
21	Throttle Friction Lock Cone	51	Taper Pin
		52	Bellcrank Assembly
22	Cone	53	Bushing
23	Spring Washer	54	Bevel Gear Bearing Retainer
24	Throttle Tube Assembly		
25	Throttle Friction Knob	55	Gear Housing Assy
26	Sliding Cone Assembly	56	Bushing
27	Friction Sleeve	57	Bushing

2-69. ASSEMBLY — LEVERS AND TORQUE TUBES. (See figure 2-11.) Before assembly, lubricate bearings with Spec MIL-G-3278 grease. Install all bushings with a coating of wet zinc chromate primer.

a. Press the bearing housing assembly (37) on the collective pitch torque tube (33).

b. Install the lock nut (38) and ring (39).

c. Install the pilot's and co-pilot's levers on the torque tube (33) and secure with spacers (24) and special bolts.

TEXT DELETED

d. Press the bearing (26) and grease retainers (27) into the co-pilot's lever end of the torque tube (33). Press the bearing (26), grease retainer (27), and guard (25) on the threaded end of the throttle torque tube (28) and install the tube in the collective pitch torque tube, pressing the throttle torque tube into the bearing (26) at the co-pilot's lever end.

e. Install the bellcranks (21 and 42) on the throttle torque tube (28) and secure with taper pins (20 and 43).

f. Connect link assembly (41) to the bellcrank on the co-pilot's lever and to the bellcrank (42).

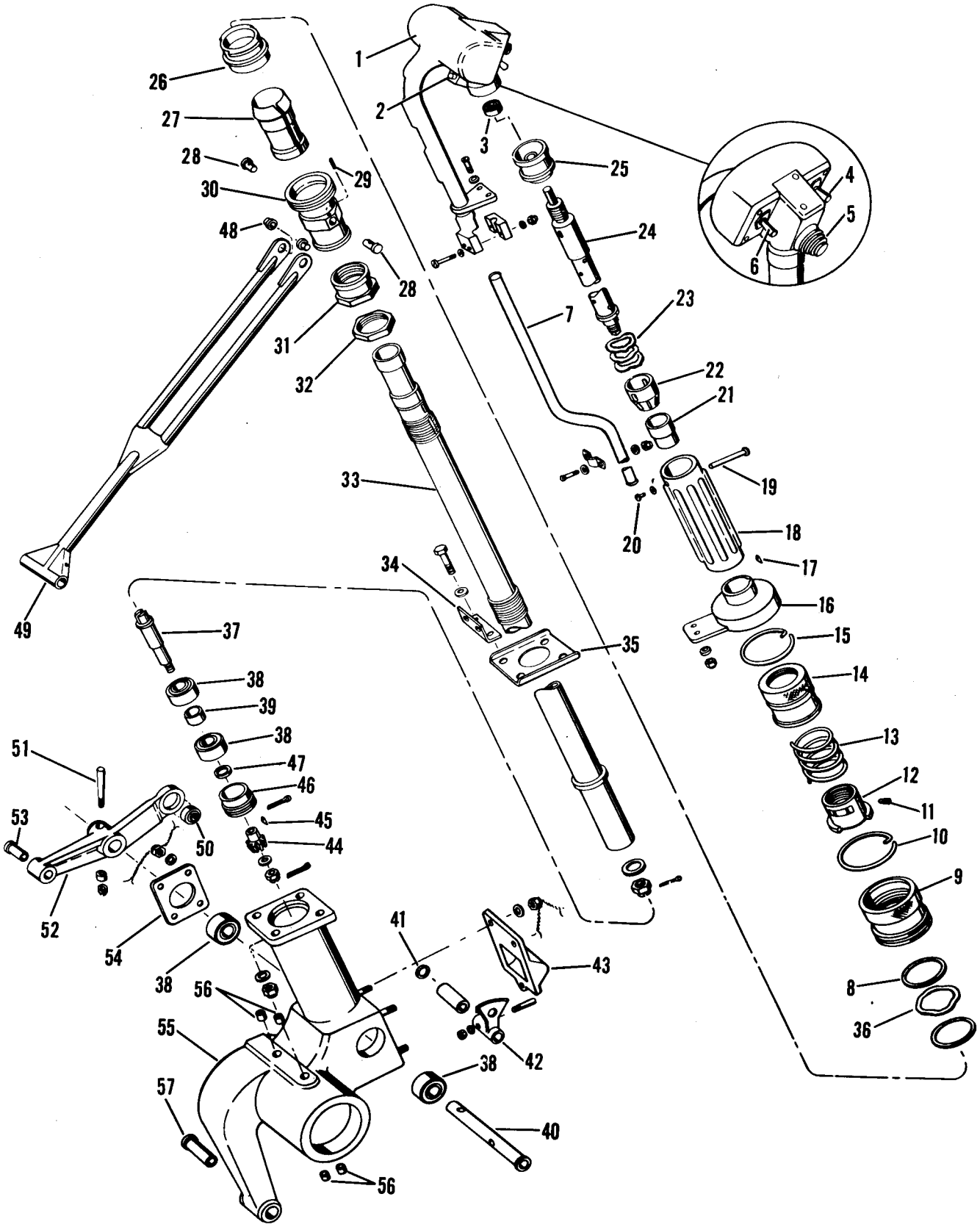

Figure 2-12. Pilot's Collective Pitch Lever

g. Connect link assembly (3) to the bellcrank on the pilot's lever and to the bellcrank (21).

h. Install the cam assembly (2) on the pilot's lever.

i. Attach the yokes (17) with spacers (18 and 19) to the quadrant assembly (9).

j. Install the quadrant assembly (9) and yokes (17) on the throttle torque tube (28) and secure with the nut.

k. Attach retainer (13) to quadrant (9).

l. Connect the yokes (17) to the cam (2), using the track roller bearing (12) in the slot of the cam.

m. Connect the link (15) to the bellcrank on the pilot's lever and to the yokes (17).

2-70. INSTALLATION. (See figure 2-11.) To install the collective pitch levers assembly, reverse the removal procedure. Rig collective pitch controls as outlined in Flight Controls Rigging Procedure in this section. Rig throttle controls as outlined in Power Plant Controls Rigging Procedure, Section V.

2-71. DIRECTIONAL CONTROLS.

2-72. DESCRIPTION. (See figure 2-13.) The directional control pedals actuate the flight controls to obtain directional control of the helicopter. The pilot's and co-pilot's pedals are interconnected by torque tubes. A pin latch is provided on each pedal so that it may be adjusted by the pilot or co-pilot for greater operating comfort. The hydraulic wheel brake master cylinders are attached to the pilot's pedal assemblies and operate the brakes when the toe of each pedal is depressed. The right or left pedal can be depressed individually for turning or both pedals can be depressed simultaneously for *moderate deceleration* or parking. The brakes can not be operated by the co-pilot's pedals.

2-73. REMOVAL. (See figure 2-13.) The directional control pedal assembly is removed as follows:

a. Disconnect the directional centering spring at the torque tube.

b. Disconnect the two rod assemblies connecting the torque tubes with the differential control assembly.

c. Disconnect the hydraulic brake lines.

d. Remove the eight attaching bolts of the two support brackets. Access to the nuts used with these bolts is through the removable panel on the underside of the fuselage nose section.

e. Remove the pedal assembly.

2-74. DISASSEMBLY. (See figure 2-13.) The directional control pedal assembly is disassembled as follows:

NOMENCLATURE KEY FOR FIGURE 2-13

1	Bearing Guard
2	Bearing
3	Bearing Guard
4	Pilot's Pedal, RH
5	Pilot's Pedal Post Assy, RH
6	Channel
7	Pedal Adjustment Lever
8	Bushing
9	Sleeve
10	Pedal Adjustment Release Spring
11	Pedal Adjustment Pin
12	Pilot's Pedal, LH
13	Pilot's Pedal Post Assy, LH
14	Pin
15	Brake Controls Idler
16	Pedal Adjustment Plate
17	Pedal Adjustment Extension Spring
18	Pedal Adjustment Arm, LH
19	Pedals Support
20	Bearing Guard
21	Bearing
21A	Bearing Guard
22	Bearing Retainer
23	Pedal Adjustment Arm, RH
23A	Taper Pin
24	Brake Master Cylinder
25	Brake Master Cylinder Clevis
26	Brake Rod
27	Rod End
28	Bearing Retainer
29	Pedal Assembly Retainer
29A	Flat Head Pin
30	Brake Support, RH
31	Brake Support Bearing
32	Co-pilot's Pedal Assy, RH
33	Snap Ring
34	Stop Bolt
35	Pedal Limit Stop Assy
36	Co-pilot's Pedal Post Assy, RH
37	Co-pilot's Pedal Adjustment Plate Assy, RH
38	Co-pilot's Pedal Adjustment Plate Assy, LH
39	Co-pilot's Pedal Post Assy, LH
40	Co-pilot's Pedal Assy, LH
41	Co-pilot's Pedal Bearing
42	Pedals Support Assembly
43	Directional Centering Spring Arm Assy
44	Left Foot Pedal Controls Torque Tube Assy
45	Right Foot Pedal Controls Torque Tube Assy
46	Brake Support Bearing
47	Brake Support, LH
48	Left Brake Support Spacer Collar

a. Remove the four taper pins which secure the co-pilot's pedal retainers (29) and the pedal adjustment plate assemblies (37 and 38) to the pedal torque tubes.

b. Slide off the retainer (29), co-pilot's left pedal post (39), adjusting plate assembly (38), left pedal support (42), adjusting plate assembly (37) and co-pilot's right pedal post (36).

c. Remove the three taper pins which secure the pilot's pedal retainer (29), and the pedal adjustment plate arms (18 and 23) to the pedal torque tubes.

d. Slide off the retainer (29), right brake cylinder support (30), pilot's pedal post (5), adjusting plate arm (23), right pedal support

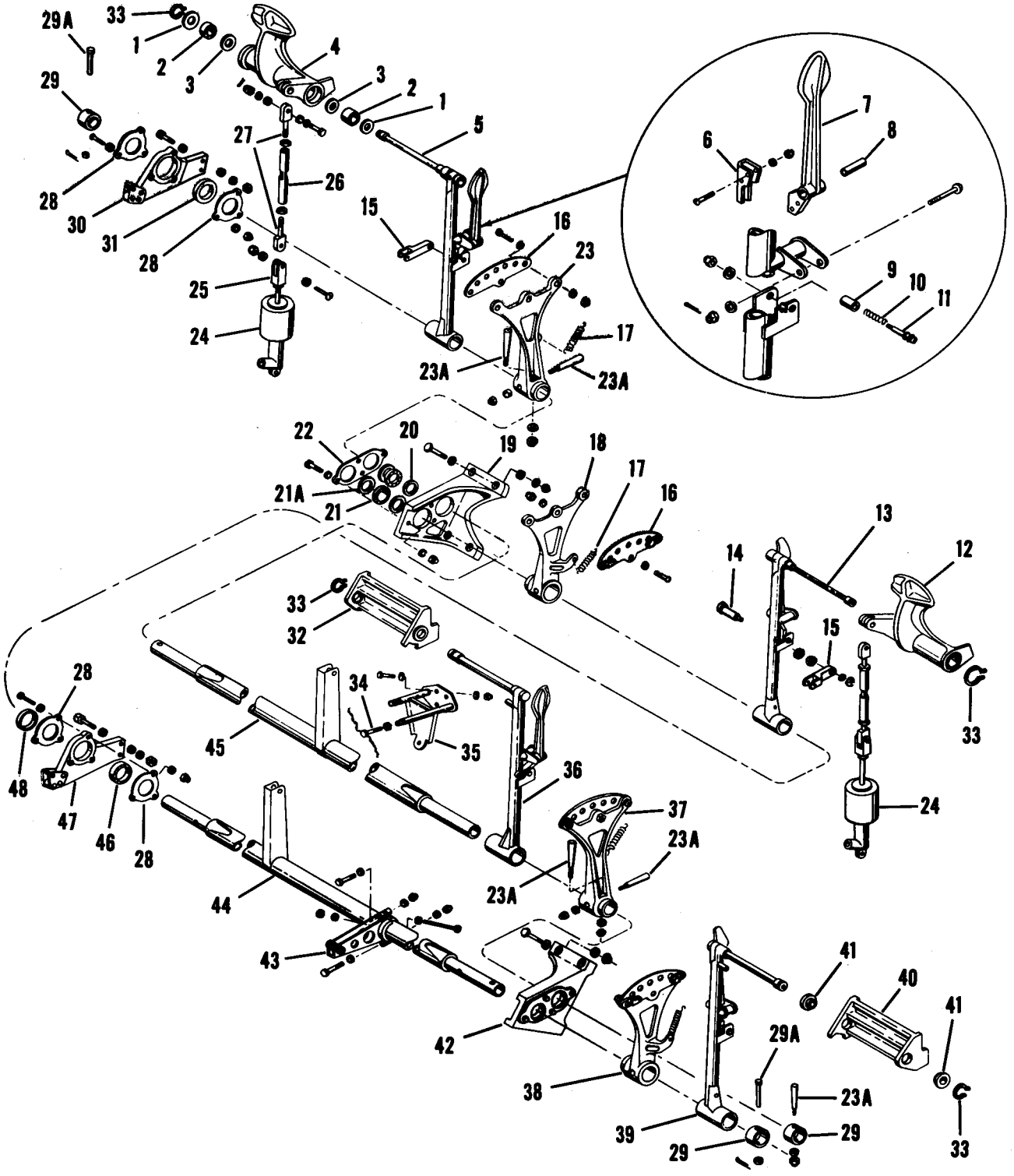

Figure 2-13. Directional Pedals

1 Rod End Bearing
2 Lock and Check Nuts
3 Washer
4 Housing
5 Bolt
6 Pistons
7 Spring
8 Bearing
9 Rod End Bearing Assembly
10 Retainer
11 Rod Assembly
12 Brake
13 Longitudinal Rod Assembly
14 Lateral Rod Assembly
15 Directional Rod Assembly
16 Brake

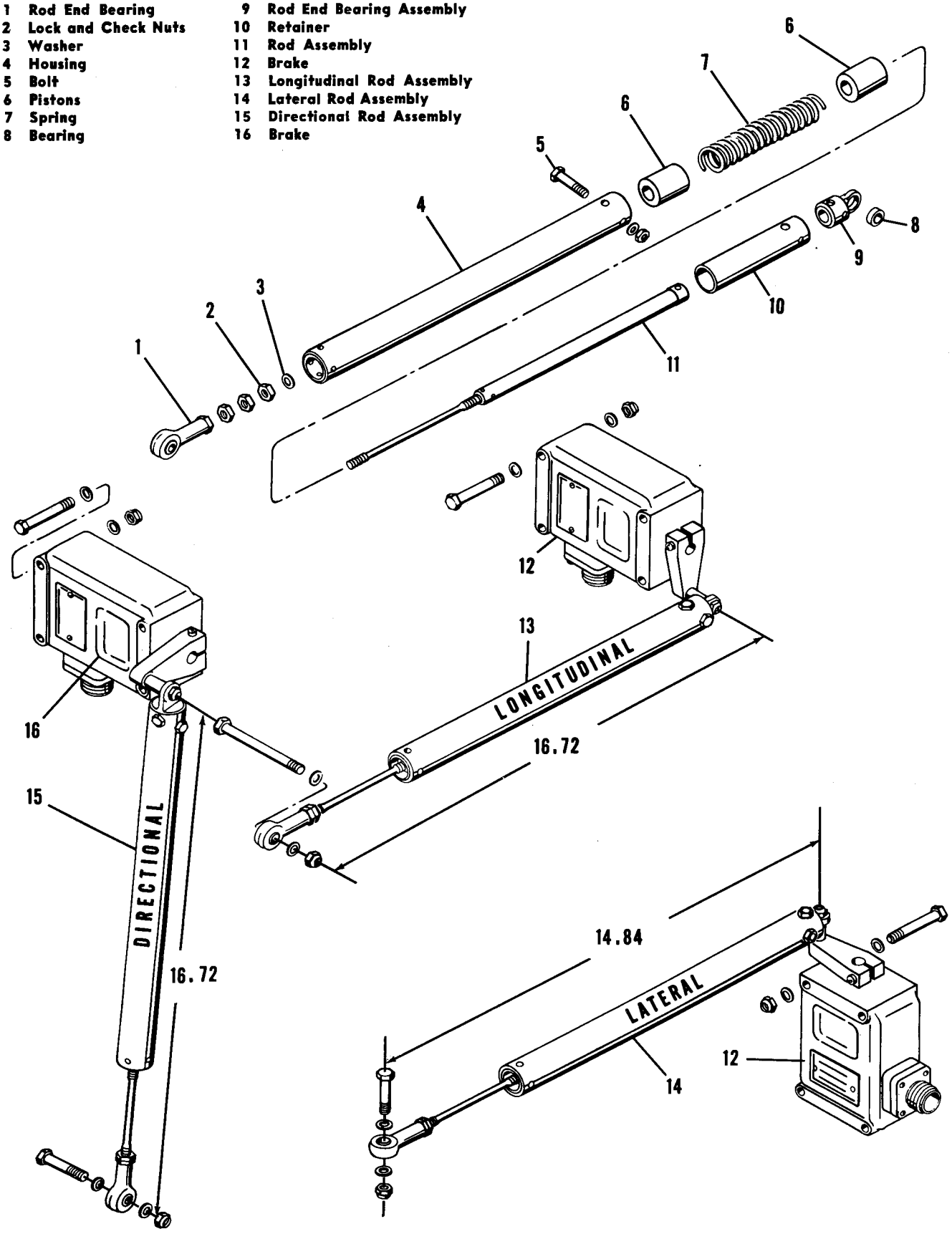

Figure 2-14. Centering Springs and Magnetic Brakes

(19), adjusting plate arm (18), pilot's left pedal post (13), and left brake cylinder support (47).

e. Detach the brake cylinders and their brake rods, from the pilot's pedals and from the two brake supports (30 and 37).

f. Remove the snap ring which retains the pedals (4, 12, 32, and 40) on their pedal posts and slide the pedals off the post shafts.

g. Press the bearings (2) from the pilot's pedals and the bearing (41) from the co-pilot's pedals if renewal is required.

2-75. LUBRICATION. Lubricate the bearings with Spec MIL-G-3278 grease after assembly. Coat adjustment threads of pedal stop screws and brake cylinder rod ends with Spec JAN-A-669 anti-seize compound.

2-76. ASSEMBLY. (See figure 2-13.)

a. Coat new bearings (41 and 2) with wet zinc chromate primer before installation.

b. Coat all dissimilar metals (if non-rotating parts) and all bolts with wet zinc chromate primer during assembly.

c. Assemble all parts on the two torque tubes (44 and 45) in the order shown in figure 2-13 and secure with the taper pins.

d. The nuts and bolts which attach the brake cylinder upper rod end (27) to the pilot's pedals and the brake cylinders to their supports should be tightened only finger tight.

2-77. INSTALLATION. Installation is the reverse of the removal procedure.

2-78. CENTERING SPRINGS AND MAGNETIC BRAKES.

2-79. DESCRIPTION. (See figure 2-14.) Three centering springs and magnetic brakes are attached to the cyclic sticks and directional pedals. The centering springs connect the flight controls to the magnetic brakes which are normally in the locked position. The purpose of the centering springs is to provide an artificial "feel" in the controls. Normal "feel" in the flight controls is lost due to the hydraulic flight control system. The magnetic brakes are provided to allow the neutral position to be shifted to meet the various flight conditions. The magnetic brakes are released by a switch located on the cyclic stick.

Note

For electrical wiring data on the magnetic brakes refer to Section X.

2-80. OPERATION. When the controls are moved to the desired position, the pilot operates the switch on his cyclic stick. The magnetic brakes are then de-energized and permit the centering spring to move the arm of the brake unit to the new position until there is no load on the spring. The pilot then releases the switch. With the switch in the OFF position, the three brakes will maintain their present positions until a new flight attitude is desired. The directional centering spring assembly is located on the forward end of the control console, above the directional control pedal assembly. The lateral centering spring assembly is located on the first bulkhead aft of the collective pitch lever assembly and under the cockpit floor. The longitudinal centering spring assembly is located under the cockpit flooring directly beneath the pilot's seat. Remove the panels on the underside of the fuselage nose section to gain access to the lateral and longitudinal centering springs. The directional centering spring may be reached from the cockpit.

2-81. REMOVAL. Break the electrical connection to the brake unit, remove the attaching bolts, and disconnect the rod end fitting. To remove the centering spring alone, detach the two end fittings.

Note

Due to the inaccessibility of the nut attaching the lateral centering spring to the magnetic brake, the centering spring and magnetic brake will have to be removed as one unit.

2-82. DISASSEMBLY. (See figure 2-14.) The following disassembly procedure is applicable to all three centering spring assemblies:

a. Remove the rod end bearing (1) and nuts (2) from the rod assembly (11).

b. Remove the bolts (5) which hold the retainer (10) and bearing assembly (9) in place.

c. Remove the bearing assembly (9), retainer (10), rod assembly (11), pistons (6), and spring (7) from the housing (4).

d. Slide the spring (7) and pistons (6) from the rod assembly (11).

e. The bearing (8) is pressed in and staked. It may be pressed out for replacement.

2-83. LUBRICATION. During assembly, coat the friction surface of the pistons (6) with powdered graphite, Spec MIL-G-6711.

2-84. ASSEMBLY. (See figure 2-14.) The following assembly procedure is applicable to all three centering spring assemblies:

a. Press the new bearing (8) into the bearing assembly (9) and stake in place.

b. Place pistons (6) and spring (7) on rod (11). Lock in place with nut (2) and washer (3).

c. Slide the rod assembly into the housing (4).

d. Install the retainer (10) and bearing assembly (9). Secure with two bolts (5).

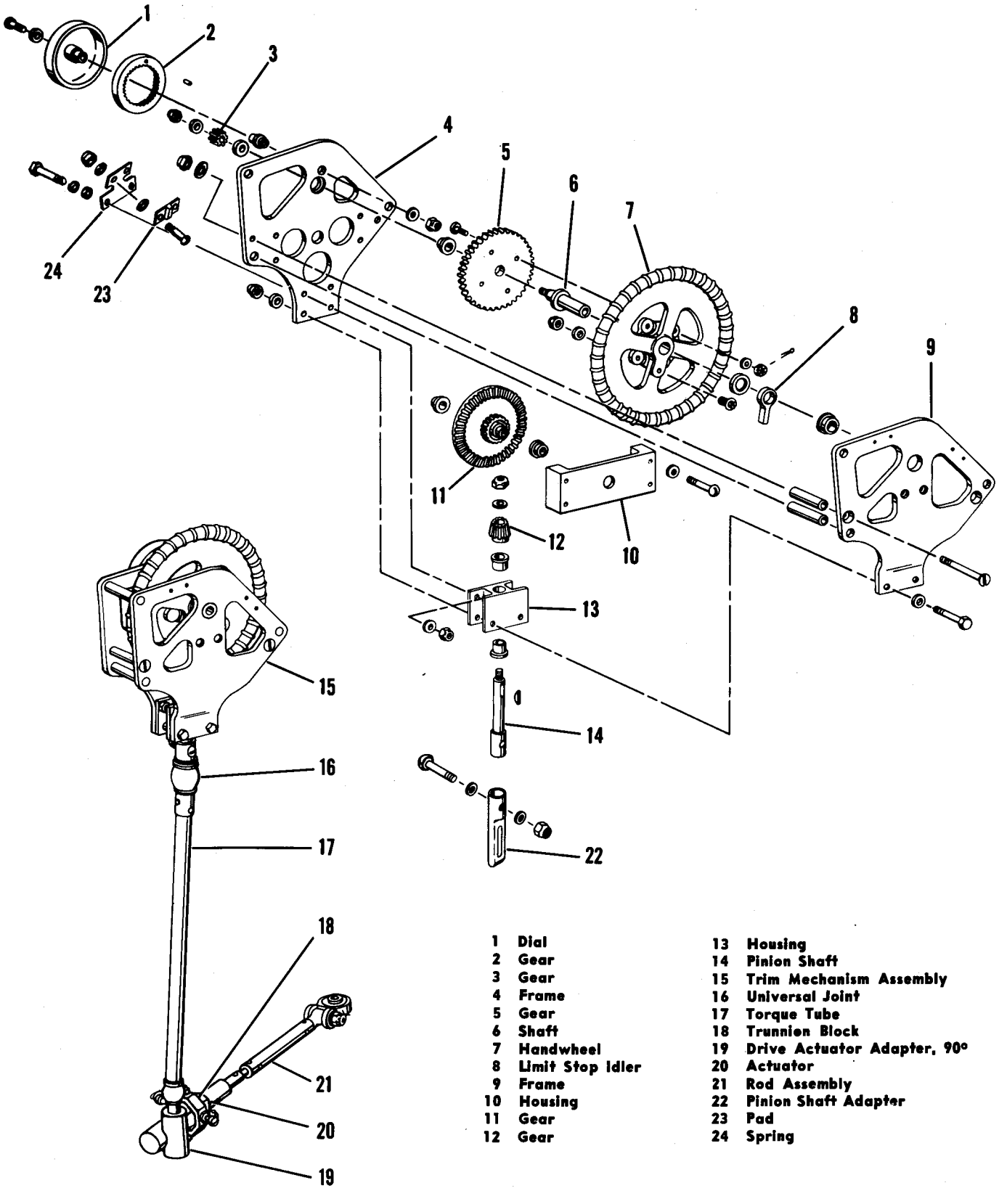

1	Dial	13	Housing
2	Gear	14	Pinion Shaft
3	Gear	15	Trim Mechanism Assembly
4	Frame	16	Universal Joint
5	Gear	17	Torque Tube
6	Shaft	18	Trunnion Block
7	Handwheel	19	Drive Actuator Adapter, 90°
8	Limit Stop Idler	20	Actuator
9	Frame	21	Rod Assembly
10	Housing	22	Pinion Shaft Adapter
11	Gear	23	Pad
12	Gear	24	Spring

Figure 2-15. Longitudinal Stick Positioner

e. Check the fit of the pistons (6) in the housing (4) and on the rod (11). If binding is felt, disassemble the unit and determine cause. Check for burrs or coating of primer on friction surfaces. Repair and reassemble.

f. Install lock nut (2) and adjust until there is less than 0.010 inch end play.

g. Install rod end bearing (1) with lock nut (2) and adjust to lengths shown in figure 2-14.

2-85. INSTALLATION. To install the centering spring and magnetic brake assemblies, reverse the removal procedure.

2-86. LONGITUDINAL STICK POSITIONER.

2-87. DESCRIPTION. (See figure 2-15.) The longitudinal stick positioner is located on the console beside the carburetor air heat and mixture control levers. The unit rotates a torque tube connected to a linear actuator underneath the console. This actuator converts the rotary motion of the torque tube to a linear motion in a rod assembly connecting the actuator with the lower differential flight controls. Movement of the positioner wheel imparts a differential movement to the collective pitch quadrants so that the collective pitch of one rotor is increased while the collective pitch of the other is decreased. The purpose of this control is to position the cyclic stick in a geometrically neutral position longitudinally to compensate for variation in cg location in the helicopter due to cargo or passenger loading.

2-88. REMOVAL. (See figure 2-15.) Remove the positioner mechanism, actuator, and rod assemblies as follows:

a. Disconnect the torque tube (17) which connects the positioner mechanism (15) to the actuator (20) and right angle drive assembly (19).

b. Remove the through bolts which support the positioner unit and the carburetor control levers.

c. Remove the screws which secure the positioner mechanism to the console.

d. Disconnect the rod assembly (21) between the differential flight control quadrant and the actuator.

e. Remove the actuator and right angle drive assembly by loosening the check nuts on two bolts on the trunnion block (18) just enough to free the actuator.

2-89. INSTALLATION. (See figure 2-15.) To install the longitudinal stick positioner, reverse the removal procedure. Make sure, when installing the actuator (20), that the bolts on the trunnion block (18) are centered in the bushings of the actuator before tightening and securing them with lock wire. A maximum of 0.003-inch end play is permissible in the actuator. Excessive end play can be eliminated by removing the cotter pin from the thrust nut at the rear of the actuator housing and tightening the nut.

CAUTION

Do not overtighten the thrust nut as this can cause binding of the bearings in the actuator which will make the stick positioner operation difficult and damage the bearings. Finger tight is enough to eliminate end play.

The nut can be safetied by redrilling the nut from the existing hole in the actuator case and installing a new cotter pin. Excessive lateral play in the bevel gear of the trim wheel mechanism can be eliminated by installing a 0.036-inch laminated brass shim with 0.003-inch laminations between the gear and frame assembly. Check the trim wheel rotation for binding after shimming. End play of the gear must not exceed 0.015 inch. A friction stop is used to prevent creeping of the trim handwheel during flight. It is composed of a spring plate (24) and a phenolic pad (23) attached to the spring. A force of two pounds, ± one pound, is required to move the handwheel. To increase tension add washers between the pad and spring plate, and to decrease tension add washers between the frame (4) and the spring plate. Rig the stick positioner as outlined in the Flight Controls Rigging Procedure in this section.

2-90. HYDRAULIC FLIGHT CONTROLS.

2-91. For complete details on hydraulic flight controls system refer to Hydraulic Systems, Section III.

2-92. LOWER DIFFERENTIAL FLIGHT CONTROLS.

2-93. DESCRIPTION. (See figure 2-16.) The lower differential control assembly beneath the cockpit floor is a combination of bellcranks and quadrants which coordinate and transmit the movement of the cockpit controls to the forward and aft rotors by means of the cable assemblies. There are five separate controls in the assembly operating either independently or in conjunction with one another; they are the longitudinal, collective pitch, longitudinal stick positioning, lateral, and directional controls.

2-94. OPERATION. (See figures 2-8 and 2-17.) Separating the lower differential control assembly into its various control functions, its operation is as follows:

2-95. For Longitudinal Control, the lowest quadrant (25, figure 2-17) on the differential assembly is operated by linkage from the longitudinal position of the cyclic sticks causing the quadrant to rotate about its central shaft. Four longitudinal cables which are attached to its outer ends transmit this motion to the upper flight controls and tilt both swash plates fore or aft.

2-96. For Collective Pitch Control, the walking beam (28), which has the two collective pitch

quadrants attached to its outboard ends and which is the second unit from the bottom of the differential assembly, is operated by linkage from the collective pitch levers, causing the walking beam to rotate about its central shaft. Two collective pitch cables, which are attached to the outer ends of each of the two quadrants, transmit this motion to the upper flight controls and raise or lower both swash plates.

2-97. For Longitudinal Stick Positioning, the bellcrank assembly (30), which is the third unit from the bottom of the differential assembly, is operated by linkage from the positioner mechanism. The bellcrank connects to the two collective pitch quadrants by means of two link assemblies (12) and the motion created causes the quadrants to rotate on their shafts in the outboard ends of the collective pitch walking beam. This motion imparts a differential movement to the collective pitch cables so that the collective pitch of one rotor is increased while the collective pitch of the other rotor is decreased.

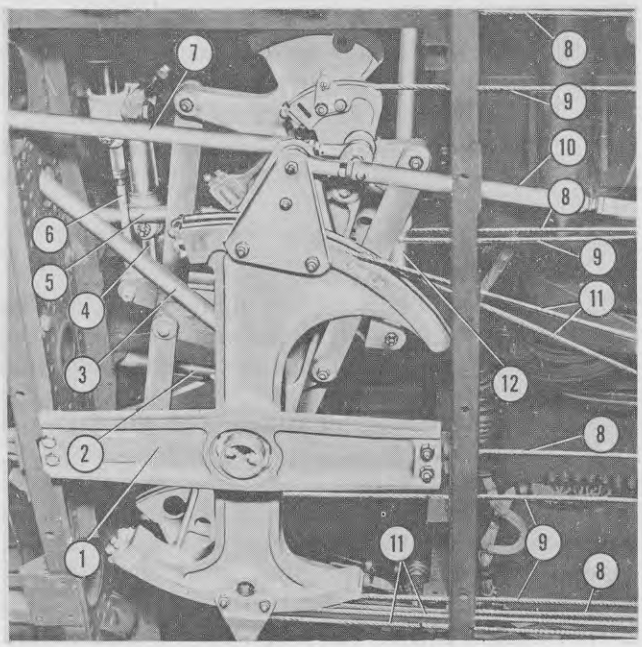

1 Support Assembly
2 Directional Push Rod
3 Trim Push Rod
4 Directional Actuator Link
5 Directional Push Rod
6 Lateral Actuator Link
7 Collective Pitch Push Rod
8 Lateral Cable, four
9 Collective Pitch Cable, four
10 Longitudinal Push Rod
11 Longitudinal Cable, four
12 Coll Pitch Differential Link

Figure 2-16. Lower Differential Controls

NOMENCLATURE KEY FOR FIGURE 2-17

1 Trim Quadrant
2 Link Bearing
3 Grease Retainer
4 Bearing
5 Spacer
6 Bearing Insert Bushing or Spacer
7 Bushing
8 Special Washer
9 Shoulder Bolt
10 Cable Guard Plate
11 Quadrant Bearing
12 Link
13 Spacer
14 Cable Guard
15 Plain Bushing
15A Flanged Bushing
16 Cable Guard Plate
17 Spacer
18 Cable Guard
19 Spacer
20 Bearing Support
21 Bushing
22 Bearing
23 Spacer
24 Cable Guard Plate
25 Longitudinal Quadrant
25A Lubricator Fitting
26 Cable Guard
27 Spacer
28 Coll Pitch Walking Beam
28A Lubricator Fitting
29 Spacer
30 Trim Bellcrank
30A Lubricator Fitting
31 Spacer
32 Spacer
33 Directional Bellcrank
33A Lubricator Fitting
34 Upper Directional Lever
35 Taper Pin
36 Spacer
37 Cable Guard Plate
37A Cable Guard
38 Cable Guard
39 Lower Directional Lever
40 Directional Lateral Quadrant
41 Lateral Walking Beam
41A Lubricator Fitting
42 Upper Bearing Housing Plates
43 Lower Differential Shaft
44 Upper Bearing Housing Plates

2-98. For Lateral Control, the walking beam (41), which has the two lateral quadrants attached to its outboard ends and which is the fifth unit from the bottom of the differential assembly, is operated by linkage from the lateral position of the cyclic sticks, causing the walking beam to rotate about its central shaft. Two lateral cables, which are attached to the outer ends of each of the two quadrants, transmit this motion to the upper flight controls and tilt both swash plates to the right or left.

2-99. For Directional Control, the three remaining units on the differential assembly; namely, the directional bellcrank (33) which is the top unit, the directional differential upper lever (34) which is the second unit from the top, and the directional differential lower lever (39) which is the fourth unit from the top, are operated by interconnecting linkage from the directional pedals. The top unit is connected directly to the pedals by push rods and rotates about its central shaft. This motion is transmitted through the directional hydraulic actuator, and additional linkage, to the differential upper lever which is pinned to the central shaft of the differential assembly. Rotation of this differential upper lever then causes the central shaft to rotate and transmits the motion to the differential lower lever which is also pinned to the central shaft. This differential lower lever connects to the two lateral quadrants by means of two link assemblies (12) and the motion created causes the quadrants to rotate about their shafts in the outboard ends of the lateral walking beam. This

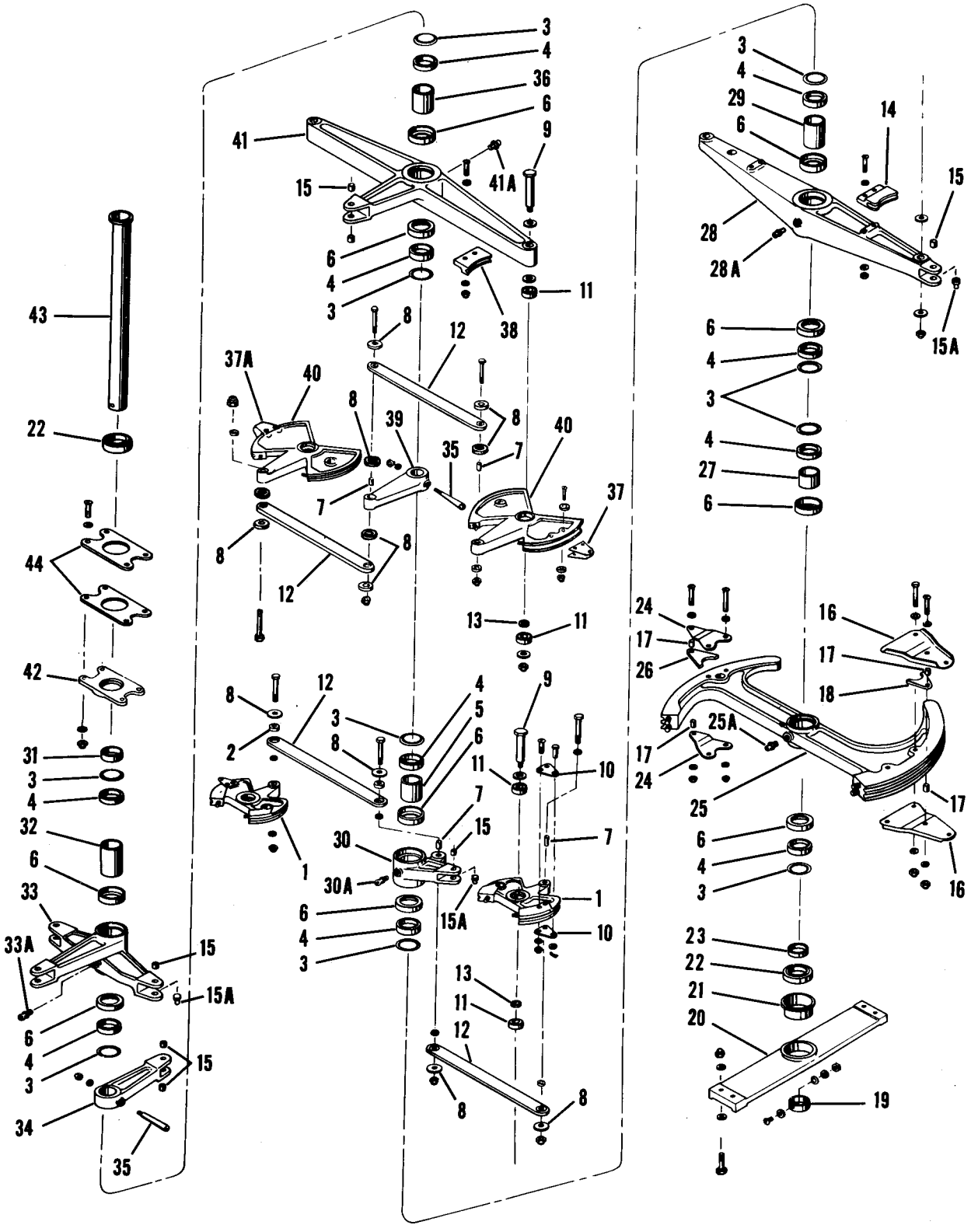

Figure 2-17. Lower Differential Flight Controls—YH-21, H-21A

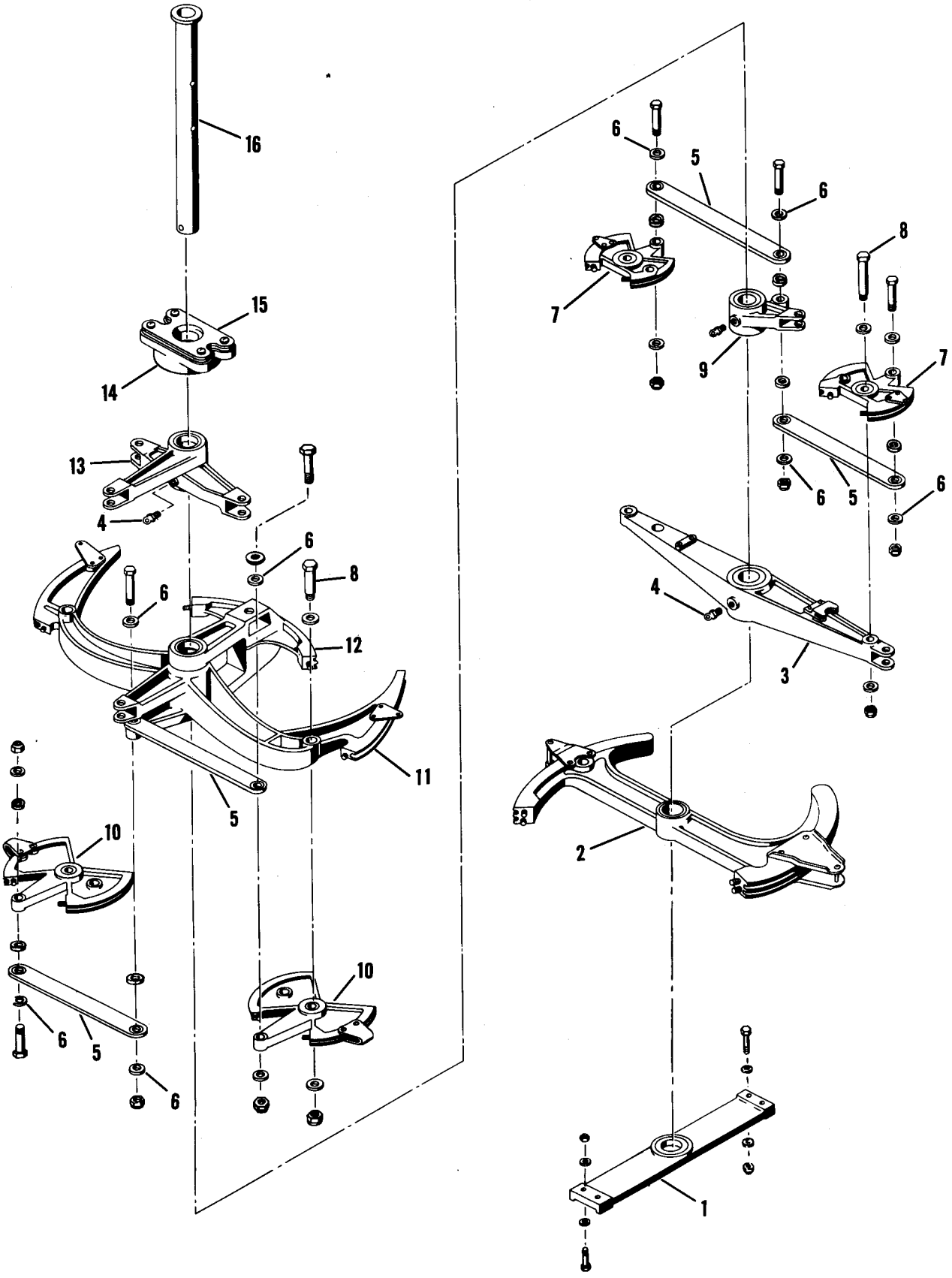

Figure 2-17A. Lower Differential Flight Controls—H-21B, H-21C

NOMENCLATURE KEY FOR FIGURE 2-17A

1	Bearing Support
2	Longitudinal Quadrant
3	Coll Pitch Walking Beam
4	Lubricator Fitting
5	Link
6	Special Washer
7	Trim Quadrant
8	Shoulder Bolt
9	Trim Bellcrank
10	Directional Lateral Quadrant
11	Lateral Walking Beam
12	Directional Control Quadrant
13	Directional Bellcrank
14	Upper Bearing Housing
15	Upper Bearing Housing Plates
16	Lower Differential Shaft

motion imparts a differential movement to the lateral cables so that the swash plate of one rotor tilts to the right while the swash plate of the other rotor tilts to the left.

2-99A. The H-21B helicopter is equipped with an automatic pilot which, when engaged, will operate the helicopter through three electric servo units connected to the lower differential controls by cables. Movements of the cockpit controls and lower differential controls of the H-21B and H-21C helicopters are identical to those of the YH-21 and H-21A helicopters.

2-100. REMOVAL. (See figure 2-16.) Remove the lower differential flight controls as follows:

a. Disconnect the directional push rod assemblies at the directional bellcrank.

b. Disconnect the rod assembly (4) from the directional actuator to the directional bellcrank.

c. Disconnect the rod assembly (12) from the lateral and directional bellcrank to the directional differential bellcrank.

d. Disconnect the four cables (8) attached to the two lateral quadrants.

e. Disconnect the rod assembly (6) from the lateral actuator to the lateral walking beam assembly.

f. Disconnect the rod assembly (7) from collective pitch idler bellcrank to the collective pitch walking beam.

g. Disconnect the four cables attached to the two collective pitch quadrants (9).

h. Disconnect the rod assembly (3) from the trim actuator to the trim bellcrank.

i. Disconnect the four cables (11) attached to the longitudinal quadrant assembly.

j. Remove the four bolts which attach the upper bearing housing to the cockpit floor.

k. Remove the bolts which attach the lower bearing housing to the structure and lower the differential control assembly from the helicopter.

l. To remove the lower differential controls on H-21B and H-21C helicopters the procedure given in steps a. through k. should be followed. Additional removal instructions necessary for the H-21B helicopter equipped with the automatic pilot cables are given in the following step.

m. Disconnect the directional servo cables from the differential directional quadrant (46, figure 2-17). Disconnect the lateral servo cables from the walking beam assembly (45, figure 2-17).

2-101. DISASSEMBLY. (See figure 2-17.) Disassemble the lower differential flight controls as follows:

CAUTION

Many of the castings in the flight control system contain internal bearing separator lands. Pressing a bearing through the bore of the casting will break off this land. Always push bearings outward from the castings during disassembly.

a. Remove the two bolts which attach the spacer (19) to the shaft (43).

b. Slide bearing support (20), bearing (22), and spacers (19 and 23) from the shaft.

c. Slide the longitudinal quadrant assembly (25), and bearings (4), retainers (3), and spacer (27) from the shaft.

d. Slide the collective pitch walking beam (28) and trim bellcrank (30) from the shaft along with bearings (4), spacers (5 and 29), and retainers (3).

e. Disassemble the collective pitch control assembly by removing shoulder bolts (9) and the bolts which attach links (12) to the trim bellcrank (30) and collective pitch quadrants (1).

f. Remove the taper pins (35) from the levers (34 and 39) and slide the levers and the lateral

walking beam assembly (41) from the shaft. Remove bearings (4), retainers (3) and spacer (36) with the assembly.

g. Disassemble the walking beam assembly by removing the shoulder bolts (9) and the bolts which attach the links (12) to the lever (39) and lateral quadrants (40).

h. The lateral control units of the H-21B and H-21C helicopters differ from those of the YH-21 and H-21A helicopters in that the two levers (34 and 39) have been replaced by a directional control quadrant (12, figure 2-17A). To remove this quadrant, remove the two taper pins and slide it from the shaft. The lateral walking beam assembly (11) will come off with the quadrant.

i. Disassembly of the lateral walking beam assembly of the H-21B and H-21C helicopters is the same as described in step g.

j. Slide the directional bellcrank (33, figure 2-17), and bearings (4), retainers (3), and spacer (32) from the shaft.

k. Slide spacer (31), housing (42) and bearing (22) from the shaft.

2-102. ASSEMBLY. (See figure 2-17.) Replace all worn or defective bearings. Assemble all bushings, bearings, and inserts of dissimilar metals with a wet coat of zinc chromate primer. Place a fillet of zinc chromate at all boundaries where bearings, bushings, and inserts are in contact with magnesium. Assemble as follows:

a. Slide bearing (22) on shaft (43).

b. Slide housing (42) and spacer (31) on shaft (43).

c. Place a bearing (4), retainer (3), and bushing or spacer (6) in each end of directional bellcrank (33) with spacer (32) between, and slide on shaft (43).

d. Slide lever (34) on shaft and secure with taper pin (35).

Note

The small end of the pin shank must not extend more than 0.06 (1/16) inch beyond surface of lever. Install with wet zinc chromate primer.

e. Assemble the lateral control assembly using shoulder bolt (9) to attach lateral quadrants (40) to walking beam assembly (41). Attach links (12) to lever (39) and quadrants (40).

f. Place a bearing (4), retainer (3), and bushing or spacer (6) in each end of the walking beam (41) with spacer (36) between bearings.

g. Slide walking beam (41) and lever (39) on shaft (43).

h. Secure lever (39) with taper pin (35).

Note

The small end of the pin shank must not extend more than 0.06 (1/16) inch beyond surface of lever. Install with wet zinc chromate primer.

i. The lateral control units of the H-21B and H-21C helicopters are assembled the same as outlined for the YH-21 and H-21A helicopters except that the walking beam (11, figure 2-17A) is positioned between the arms of the directional control quadrant (12) before sliding the units onto the shaft(16).

j. Secure the quadrant to the shaft with two taper pins.

Note

The small ends of the pin shanks must not extend more than 0.06 (1/16) inch beyond the surface of the bellcrank arms. Install with wet zinc chromate primer.

k. Attach lateral quadrants (10) to the lower side of the walking beam (11) using shoulder bolts (8). Attach links (5) to the quadrants and the lower arm of the directional control quadrant (12).

l. Assemble the collective pitch assembly using shoulder bolt (9, figure 2-17) to attach quadrants (1) to the walking beam (28). Attach links (12) to trim lever (30) and quadrants (1).

m. Place a bearing (4), retainer (3), and bushing or spacer (6) on each side of the trim lever (30) with spacer (5) between bearings.

n. Place a bearing (4), retainer (3), and bushing or spacer (6) in each end of walking beam (28) with spacer (29) between bearings.

o. Slide trim lever (30) and walking beam (28) on shaft (43).

p. Place a bearing (4), retainer (3), and bushing or spacer (6) in each end of longitudinal quadrant (25), with spacer (27) between, and slide on shaft.

q. Slide spacer (23) on shaft (43).

r. Place bearing (22) in bushing (21) which is pressed into support (20) and slide on shaft (43).

s. Place spacer (19) on shaft (43) and secure with two bolts.

2-103. INSTALLATION. (See figure 2-16.) To install the lower differential flight controls, reverse the removal procedure. Rig controls as outlined in Flight Controls Rigging Procedure in this section.

2-104. UPPER FLIGHT CONTROLS.

2-105. DESCRIPTION. (See figure 2-18.) The upper flight controls located at the forward and aft rotors transmit the movement of the control cables to the rotor control assemblies. These

1 Link
2 Collective Pitch Differential Bellcrank
3 Collective Pitch Push Rod
4 Longitudinal Push Rod
5 Longitudinal Bellcrank
6 Link
7 Longitudial Differential Bellcrank
8 Link
9 Link
10 Collective Pitch Bellcrank
11 Collective Pitch Arm
12 Lateral Link
13 Link
14 Lateral Differential Bellcrank
15 Lateral Bellcrank
16 Lateral Push Rod
17 Lateral Quadrant
18 Collective Pitch Quadrant
19 Longitudinal Quadrant

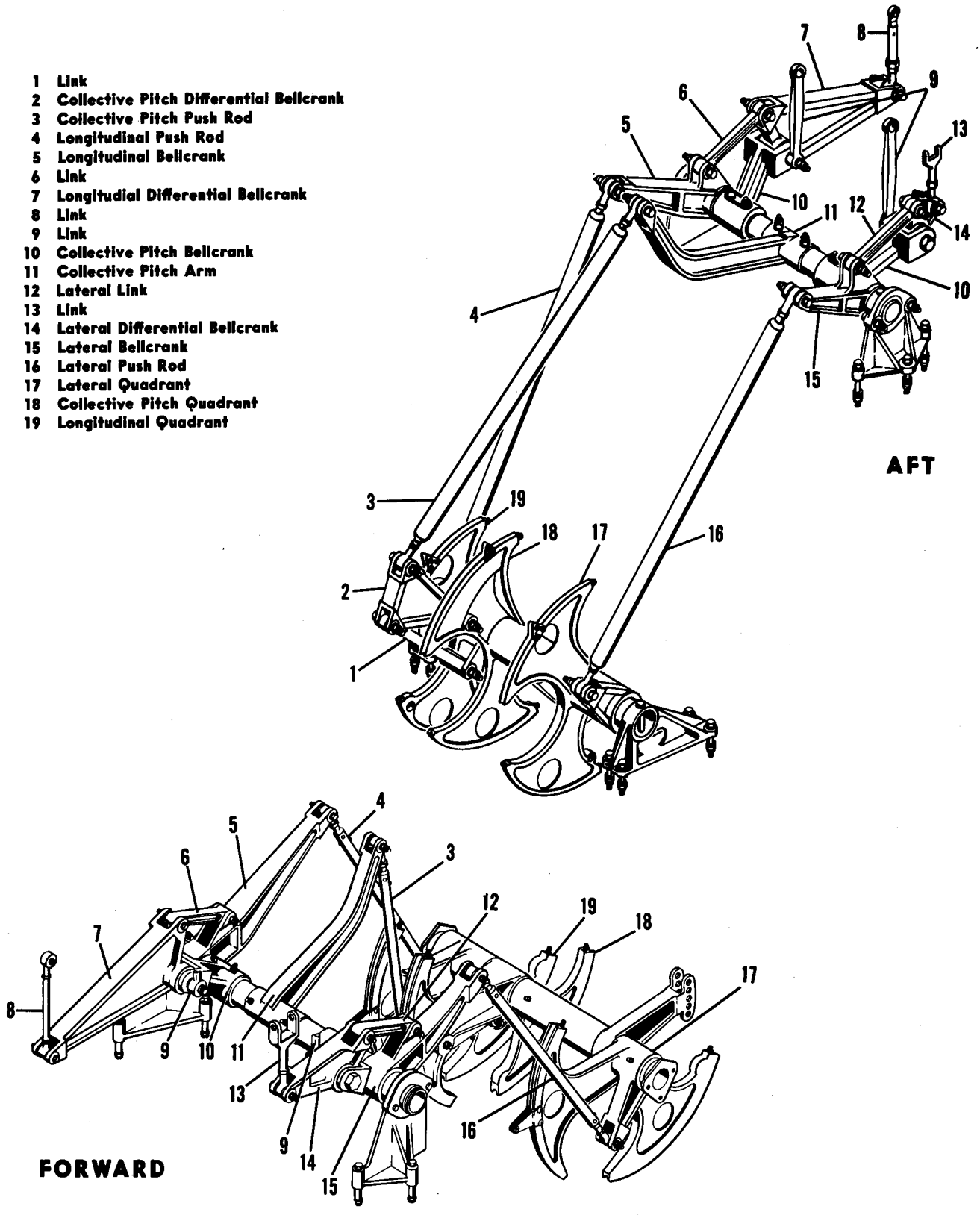

Figure 2-18. Upper Flight Controls

upper flight controls include the lateral, longitudinal, and collective pitch controls, each having a quadrant to which their respective cables are attached. The assembly consists of three quadrants, which operate on a common shaft, plus a series of bellcranks and links which also operate on a common shaft. The quadrants are connected to the bellcranks by three push-pull rods and the bellcranks are connected to the swash plate of the rotor control assembly by short links. To prevent the failure of the rod-end bearings on the push-pull rods due to the collection of dust, nylon dust covers are wired to the rod ends. It is not necessary to remove these covers when removing push-pull rods except when checking bearings.

2-106. OPERATION. (See figures 2-8 and 2-18.)

2-107. *For Lateral Control,* the lateral cables rotate the lateral quadrant (17, figure 2-18) of the upper control assembly and the train of movement passes through the lateral push rod (16) to the lateral bellcrank (15) and from it through the lateral link (12) to the lateral differential bellcrank (14). This bellcrank is connected to the rotor control swash plate by a short link (13) and the transmitted movement causes the swash plate to tilt to the right or left to bank the helicopter.

2-108. *For Collective Pitch Control,* the collective pitch cables rotate the collective pitch quadrant (18) of the upper control assembly and the train of movement passes through the collective pitch push rod (3) to the collective pitch arm (11). This bellcrank is pinned to its shaft and causes the shaft to rotate which, in turn, causes the two bellcranks (10), which are also pinned to the shaft, to rotate. Two short links (9) connect these two bellcranks to the rotor control swash plate and the transmitted movement causes the swash plate to raise or lower and change the collective pitch of the blades. To prevent the swash plate from tilting laterally or longitudinally, these two bellcranks (10) are attached to the lateral differential bellcrank (14) and to the longitudinal differential bellcrank (7) in such a manner that the short longitudinal and lateral swash plate links (13 and 8) also raise or lower the swash plate the same amount as the collective pitch links.

2-109. *For Longitudinal Control,* the longitudinal cables rotate the longitudinal quadrant (19) of the upper control assembly and the train of movement passes through the longitudinal push rod (4) to the longitudinal bellcrank (5) and from it through the longitudinal link (6) to the longitudinal differential bellcrank (7). This bellcrank is connected to the rotor control swash plate by a short link (8) and the transmitted movement causes the swash plate to tilt forward or aft to create forward or rearward flight. In addition, the movement of the longitudinal quadrant (19) is transmitted to the collective pitch control through the link (1) and the collective pitch differential bellcrank (2). This movement causes a slight change in the collective pitch at the same time that longitudinal pitch is changed. This differential arrangement causes the collective pitch of one rotor to increase while the collective pitch of the other rotor decreases.

2-110. REMOVAL. (See figure 2-18.) Since the forward and aft upper flight controls are similar, except the forward and aft quadrant assemblies have different type mountings, both assemblies may be removed in the same manner. Remove as follows:

Note

It is possible for water to enter the forward upper quadrant shaft. To prevent this, the exposed ends of the shaft are sealed with moisture-proof tape and painted with sealing compound before installation and recoated with sealing compound after installation. This seal must be removed before removal and disassembly of the forward upper quadrants can be accomplished.

a. Detach the collective pitch bungee and the flight control cables at the quadrant assemblies (17, 18, and 19).

b. Remove the three rod assemblies (3, 4, and 16) which connect the quadrant and bellcrank assemblies.

c. Remove the mounting bolts which attach the quadrant assembly to the structure and remove the assembly.

Note

Access to the attaching hardware for the forward upper quadrant support fittings (2 and 26, figure 2-19) may be made through the lightening holes in the forward transmission support longitudinal beams. Access through these openings is improved by working from the top of the fuselage and positioning the quadrants so that they do not block the openings.

d. Detach the four link assemblies which connect the bellcranks to the swash plate.

e. Remove the six mounting bolts which attach the bellcrank assembly to the rotor transmission.

f. Remove the bellcrank assembly, being careful that the differential bellcranks (7 and 14) do not come in contact with the collective pitch bellcranks (10) and damage either of the bellcranks.

2-111. DISASSEMBLY — FORWARD UPPER QUADRANTS. (See figure 2-19, sheet 1.) Disassemble quadrants as follows:

a. Remove taper pin (1) and slide tube support fitting (2) from shaft (23).

b. Detach the differential link (11) from the longitudinal quadrant (9) and collective pitch differential bellcrank (18).

c. Slide the longitudinal quadrant (9) and grease retainers (3) from shaft (23).

Note

Bearings (4) should not be removed from quadrants unless they show some defect or signs of wear. Quadrants without liners (bearing insert bushings), will have a ring spacer (5) between the quadrant and the bearing. If any bearings (4) have to be replaced, care must be taken that no more than one ring spacer (5) is inserted in each side of the quadrant.

d. Since the differential collective pitch bellcrank (18) is attached to the collective pitch quadrant (15), it can be removed with or without the quadrant.

Note

The differential collective pitch bellcrank bearings (17) are sealed AN bearings inserted with wet zinc chromate primer and should not be removed unless they show some defect or signs of wear. Care should be taken that the spacer, located between the bearings, is not lost.

e. Slide the collective pitch quadrant (15) and grease retainers (3) from shaft (23).

f. Slide the lateral quadrant (22) and grease retainers (3) from shaft (23).

g. Slide the tube support fitting (26) from shaft (23).

h. Remove taper pin (25) and slide spacer (24) from shaft (23).

2-112. ASSEMBLY — FORWARD UPPER QUADRANTS. (See figure 2-19, sheet 1.)

Note

Steel washers are recommended for use with bolts on all flight control system assemblies for original torque values to be retained. Torque values will decrease if aluminum washers are used by reason of their being cut by the walls of adjacent steel bushings.

Coat all contacting surfaces of dissimilar metals with zinc chromate primer. Hand pack bearings (4) with grease, Spec MIL-G-3278. To assemble the quadrants on the forward upper quadrant shaft, reverse the removal procedure.

Note

Small ends of taper pin shanks shall not extend more than 0.06 (1/16) inch.

Torque the attaching hardware to the values specified in Table 1-3, Section I. Seal the exposed ends of shaft (23) with waterproof tape, then coat the tape with sealing compound, Spec MIL-S-7124. Apply a coat of zinc chromate primer to all external nuts, bolts, taper pins, and washers. Pack all three quadrants with grease, Spec MIL-G-3278, through the lubricator fittings (8, 14, and 20).

2-113. DISASSEMBLY — FORWARD UPPER BELLCRANKS. (See figure 2-19, sheet 2.) Disassemble the bellcranks as follows:

a. Remove lock ring (1) and torque tube nut (2) from torque tube (27).

b. Slide the LH bellcrank support (5) from torque tube (27) and remove bearing retainer (3) and support bearing (4) from support.

c. Slide spacer (6) from torque tube (27).

d. Detach the differential link (19) from the lateral bellcrank (12) and lateral differential bellcrank (20).

e. Slide the lateral bellcrank (12) and grease retainers (7) from torque tube (27).

Note

Bearings (8) should not be removed from bellcranks (12 and 32) unless they show some defect or signs of wear. Bellcranks without liners (bearing insert bushings) will have a ring spacer (9) between the bellcrank and the bearing. If any bearings (8) have to be replaced, care must be taken that no more than one ring spacer (9) is inserted in each side of the bellcrank. Only the forward lateral bellcrank (12, sheet 2) and the aft longitudinal bellcrank (9, sheet 4) has an additional spacer (14, sheet 2, and 11, sheet 4) located between its two bearings.

f. Since the lateral differential bellcrank (20) is attached to the collective pitch bellcrank (17) by a special bolt (15) it can be removed with or without the collective pitch bellcrank.

Note

The lateral differential bellcrank bearings (21) are sealed AN bearings inserted with wet zinc chromate primer and should not be removed unless they show some defect or signs of wear. Care should be taken that the spacer, located between the bearings, is not lost.

g. Remove the two taper pins (16) from the collective pitch bellcrank (17) and slide the bellcrank from torque tube (27).

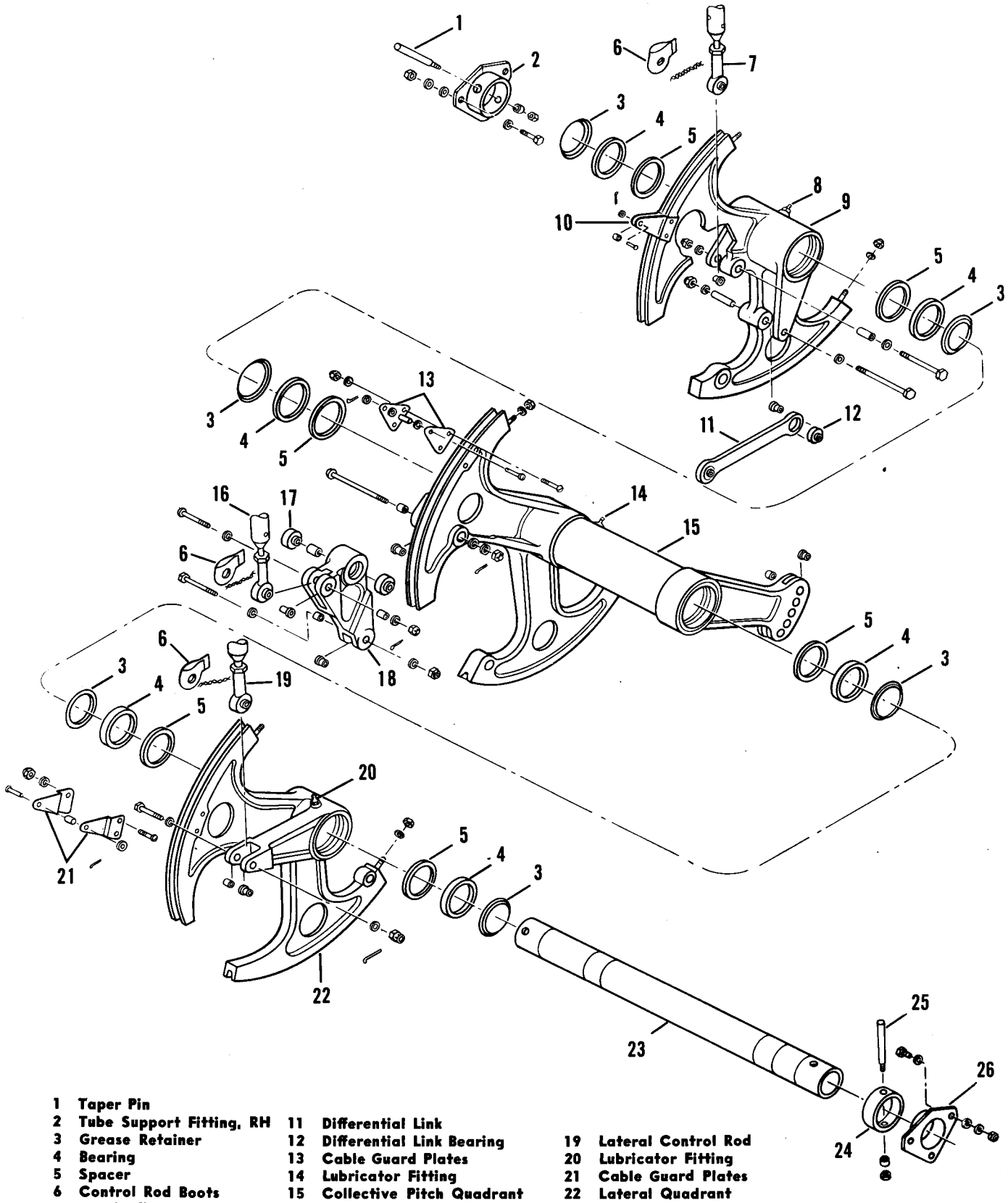

1 Taper Pin
2 Tube Support Fitting, RH
3 Grease Retainer
4 Bearing
5 Spacer
6 Control Rod Boots
7 Longitudinal Control Rod
8 Lubricator Fitting
9 Longitudinal Quadrant
10 Cable Guard Plates
11 Differential Link
12 Differential Link Bearing
13 Cable Guard Plates
14 Lubricator Fitting
15 Collective Pitch Quadrant
16 Collective Pitch Control Rod
17 Differential Bellcrank Bearing
18 Differential Collective Pitch Bellcrank
19 Lateral Control Rod
20 Lubricator Fitting
21 Cable Guard Plates
22 Lateral Quadrant
23 Quadrant Shaft
24 Spacer
25 Taper Pin
26 Tube Support Fitting, LH

Figure 2-19. Forward Upper Quadrants (Sheet 1 of 4)

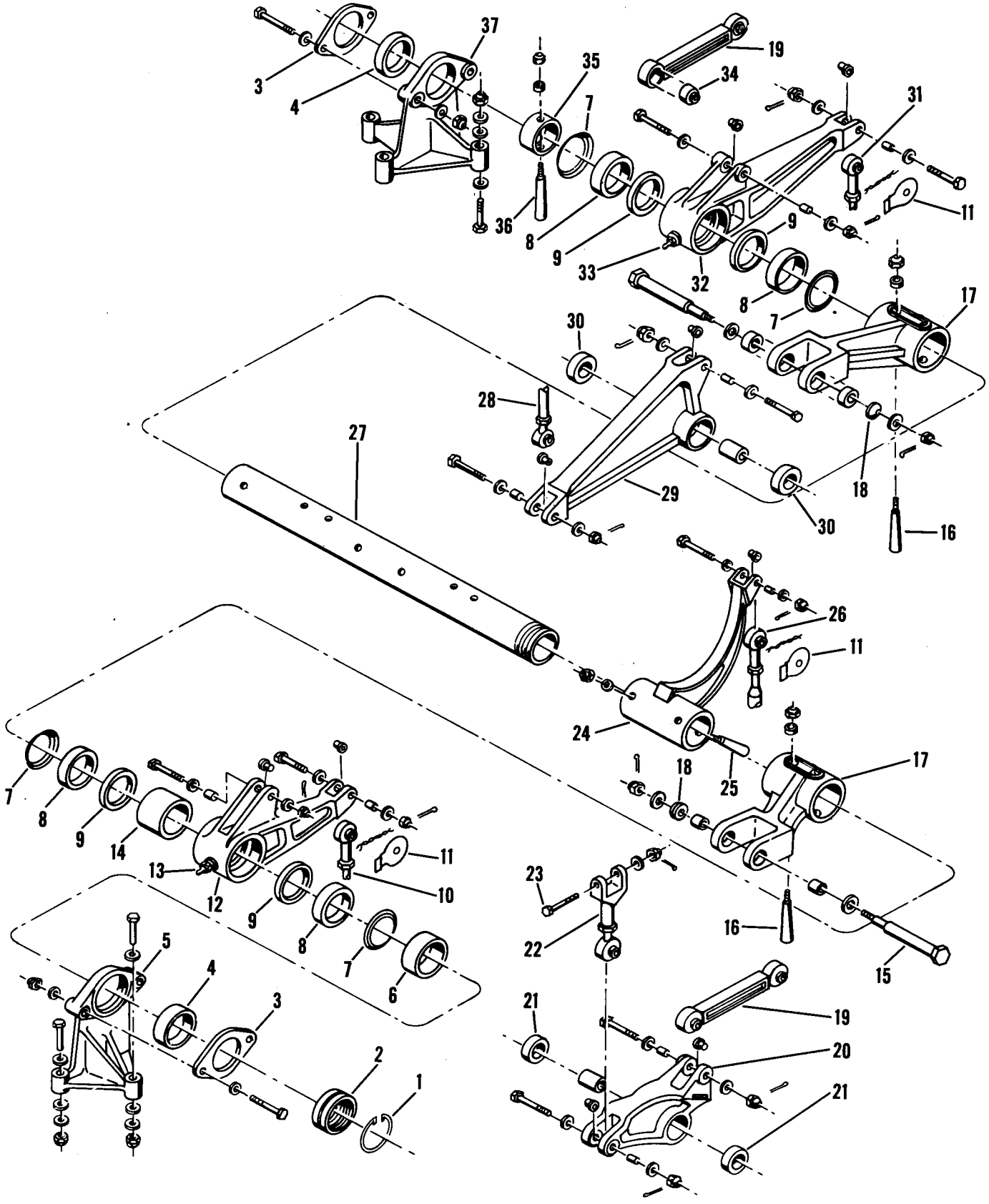

Figure 2-19. Forward Upper Bellcranks (Sheet 2 of 4)

NOMENCLATURE KEY FOR FIGURE 2-19 (Sheet 2 of 4)

1	Lock Ring
2	Torque Tube Nut
3	Bearing Retainer
4	Support Bearing
5	Bellcrank Support, LH
6	Spacer
7	Grease Retainer
8	Bearing
9	Spacer
10	Lateral Control Rod
11	Control Rod Boots
12	Lateral Bellcrank
13	Lubricator Fitting
14	Lateral Bellcrank Spacer
15	Bolt
16	Taper Pin
17	Collective Pitch Bellcrank
18	Washer
19	Differential Link
20	Lateral Differential Bellcrank
21	Differential Bellcrank Bearing
22	Lateral Link
23	Lateral Link-to-Swash Plate Bolt
24	Collective Pitch Arm
25	Taper Pin
26	Collective Pitch Control Rod
27	Torque Tube
28	Longitudinal Link
29	Longitudinal Differential Bellcrank
30	Differential Bellcrank Bearing
31	Longitudinal Control Rod
32	Longitudinal Bellcrank
33	Lubricator Fitting
34	Differential Link Bearing
35	Spacer
36	Taper Pin
37	Bellcrank Support, RH

h. Remove the two taper pins (25) from the collective pitch arm (24) and slide the arm from the torque tube (27).

i. Slide the RH bellcrank support (37) from torque tube (27) and remove bearing retainer (3) and support bearing (4) from the support.

j. Remove taper pin (36) from spacer (35) and slide the spacer from torque tube (27).

k. Detach the differential link (19) from the longitudinal bellcrank (32) and longitudinal differential bellcrank (29).

l. Slide the longitudinal bellcrank (32) and grease retainers (7) from torque tube (27).

m. Since the longitudinal differential bellcrank (29) is attached to the collective pitch bellcrank (17) by a special bolt (15) it can be removed with or without the collective pitch bellcrank.

Note

The longitudinal bellcrank bearings (30) are sealed AN bearings inserted with wet zinc chromate and should not be removed unless they show some defect or signs of wear. Care should be taken that the spacer, located between the bearings, is not lost.

n. Remove the two taper pins (16) from the collective pitch bellcrank (17) and slide the bellcrank from torque tube (27).

2-114. ASSEMBLY — FORWARD UPPER BELLCRANKS. (See figure 2-19, sheet 2.)

Note

Steel washers are recommended for use with bolts on all flight control system assemblies. Torque values will decrease if aluminum washers are used by reason of their being cut by the walls of adjacent steel bushings.

Coat all contacting surfaces of dissimilar metals with zinc chromate primer. Hand pack bearings (8) with grease, Spec MIL-G-3278. To assemble the bellcranks on the torque tube, reverse the removal procedure.

Note

Small ends of taper pin shanks shall not extend more than 0.06 (1/16) inch. If excessive end play is noted in the longitudinal or lateral bellcranks, measure the end play at the clevis end. Maximum end play is 0.105 inch, provided not less than 0.030 inch is sliding motion of the bellcrank on the torque tube. End play should not occur on bellcranks that do not have bearing insert bushings since the bearings are press fitted into the bellcrank castings. Excessive sliding motion on the torque tube can be reduced by shimming.

Torque the nuts of the special attachment bolts on the differential links (19) 75–100 pound-inches. If the 100 pound-inch limit is exceeded, the bolt, nut, and washers must be scrapped and new hardware installed. The remainder of the attaching hardware will be torqued to the values specified in Table 1-3, Section I. If it is difficult to align the lock ring hole in the torque tube nut (2) with the hole in the torque tube (27) and still maintain adequate tightness, redrill the torque tube. It is permissible to replace the lock ring (1) with a cotter pin.

CAUTION

Do not drill the torque tube if the holes in the torque tube run together. It is desirable to maintain a wall thickness of 0.0625 inch between holes.

Apply a coat of zinc chromate primer to all external nuts, bolts, taper pins, and washers. Pack the bellcranks (12 and 32) with grease, Spec MIL-G-3278, through the lubricator fittings (13 and 33).

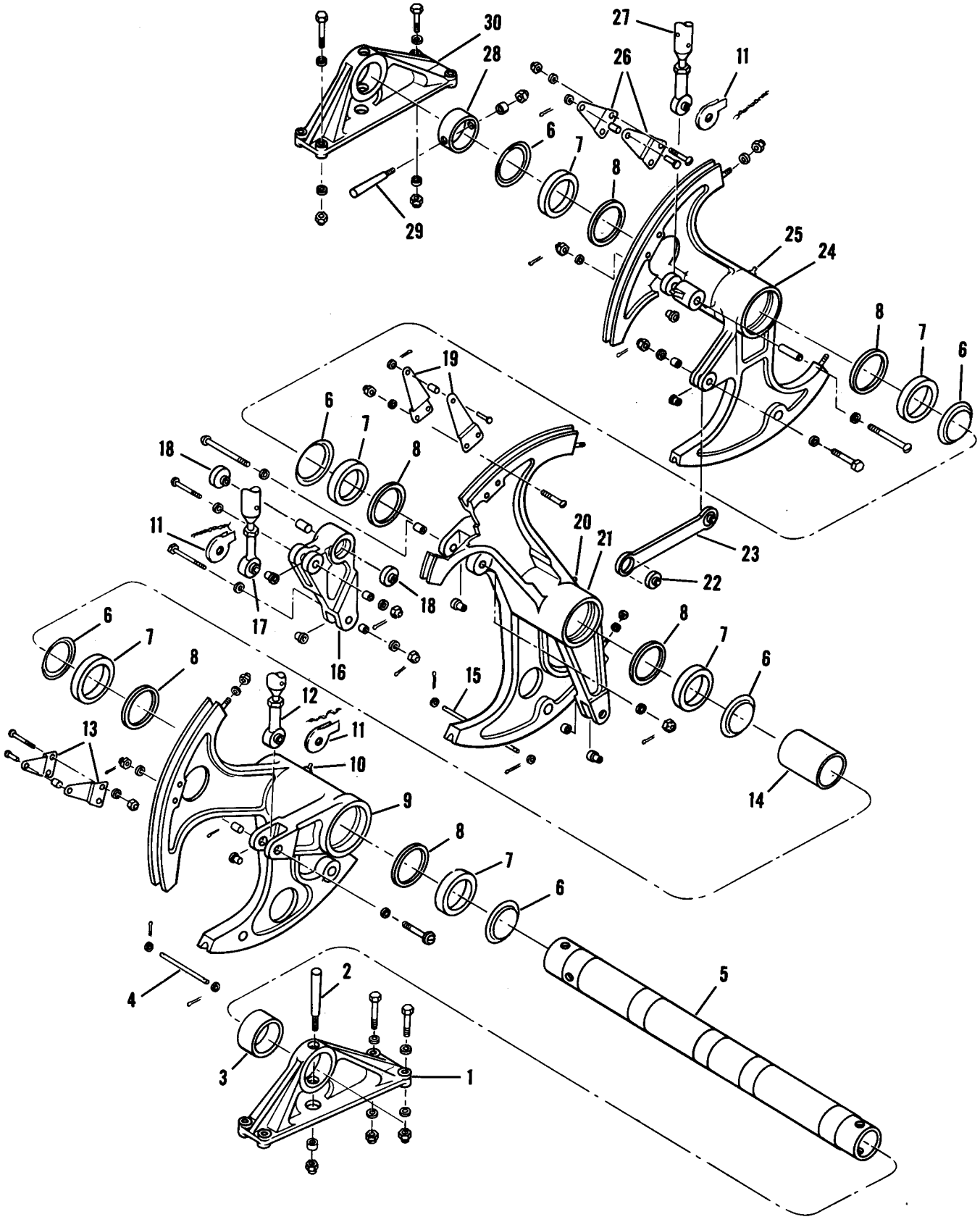

Figure 2-19. Aft Upper Quadrants (Sheet 3 of 4)

NOMENCLATURE KEY FOR FIGURE 2-19
(Sheet 3 of 4)

1 Shaft Mount, LH
2 Taper Pin
3 Spacer
4 Cable Guard Pin
5 Quadrant Shaft
6 Grease Retainer
7 Bearing
8 Spacer
9 Lateral Quadrant
10 Lubricator Fitting
11 Control Rod Boots
12 Lateral Control Rod
13 Cable Guard Plates
14 Spacer
15 Cable Guard Pin
16 Differential Collective Pitch Bellcrank
17 Collective Pitch Control Rod
18 Differential Bellcrank Bearing
19 Cable Guard Plates
20 Lubricator Fitting
21 Collective Pitch Quadrant
22 Differential Link Bearing
23 Differential Link
24 Longitudinal Quadrant
25 Lubricator Fitting
26 Cable Guard Plates
27 Longitudinal Control Rod
28 Spacer
29 Taper Pin
30 Shaft Mount, RH

2-115. DISASSEMBLY — AFT UPPER QUADRANTS. (See figure 2-19, sheet 3.)

Note

The aft upper quadrants have two cable guard pins (4 and 15) which should be removed prior to detaching cables from the quadrants.

The aft upper quadrant assembly is similar to the forward upper quadrant assembly, and the disassembly procedure should be the same as outlined in paragraph 2-111. Only the shaft mounts (1 and 30) differ from the forward upper quadrants because the aft upper quadrant assembly is seated on the aft upper longeron.

2-115A. ASSEMBLY — AFT UPPER QUADRANTS. (See figure 2-19, sheet 3.) The assembly procedure is the same as outlined in paragraph 2-112.

Note

Cable guard pins (4 and 15) should be reinstalled after the cables are attached to the quadrants.

2-115B. DISASSEMBLY—AFT UPPER BELLCRANKS. (See figure 2-19, sheet 4.) The aft upper bellcrank assembly is similar to the forward upper bellcrank assembly, and the disassembly procedure should be the same as outlined in paragraph 2-113.

2-115C. ASSEMBLY — AFT UPPER BELLCRANKS. (See figure 2-19, sheet 4.) The assembly procedure is the same as outlined in paragraph 2-114.

2-115D. INSTALLATION. (See figure 2-18.) To install the upper flight controls, reverse the removal procedure. The nominal lengths for the push rod assemblies are as follows:

Part No. & Nomenclature	Fig. & Index No.	Nominal Length
22C1696-1 Fwd Coll Pitch	2-18, 3	17.82 inches
22C1696-2 Fwd Longitudinal	2-18, 4	20.20 inches
22C1696-3 Fwd Lateral	2-18, 16	20.38 inches
22C1699-1 Aft Coll Pitch	2-18, 3	27.31 inches
22C1699-7 Aft Coll Pitch	2-18, 3	27.43 inches
22C1699-2 Aft Longitudinal	2-18, 4	29.00 inches
22C1699-8 Aft Longitudinal	2-18, 4	29.12 inches
22C1699-3 Aft Lateral	2-18, 16	28.16 inches
22C1699-9 Aft Lateral	2-18, 16	28.28 inches

These *nominal* dimensions are measured from center to center of the rod end bearings and will change as adjustments are made during installation and rigging. Tighten the nuts on the bellcrank support mounting bolts to a torque of 70–90 pound-inches. Rig the controls as outlined in Flight Controls Rigging Procedure in this section.

2-116. BUNGEES.

2-117. LONGITUDINAL BUNGEE.

2-118. DESCRIPTION. (See figure 2-20.) The longitudinal bungee aids in moving the longitudinal flight controls of the helicopter when the hydraulic flight control system is not operating. The longitudinal bungee assembly is located under the cabin flooring just aft of the canted bulkhead. It is attached to the lower flight controls by a rod assembly extending forward from the bungee installation to an idler arm of the longitudinal control system. Since the forces which require use of the longitudinal bungee occur only under special circumstances, for example, when a blade set creates unexpected control forces, the bungee is normally locked out of the control system. However, if it becomes necessary to connect the unit into the system, this may be done quickly and easily. Refer to paragraphs 2-119 and 2-121 for installation and removal instructions.

2-119. REMOVAL. (See figure 2-20.) Remove the longitudinal bungee assembly as follows:

a. Disconnect rod assembly (25) at adjustable bellcrank (26).

b. A rope (9, figure 2-28A) must be tied to the longitudinal bellcrank (22, figure 2-20) and pulled in the direction as shown in figure 2-28A to relieve the load on the link (23, figure 2-20) so that the link may be removed.

CAUTION

The rope must be released gradually to prevent damage to the installation or injury to personnel removing or replacing the link (23, figure 2-20).

c. Remove the bolt which attaches adjustable bellcrank (26) to support fitting (27) on the fuselage structure. Remove the bellcrank.

d. Remove the bolt which attaches the rod end of the bungee (24) to the support fitting (28) and the pivot bolt attaching the longitudinal bellcrank (22) to the mounting plates fastened to the structure. Remove the longitudinal bellcrank (22) and bungee.

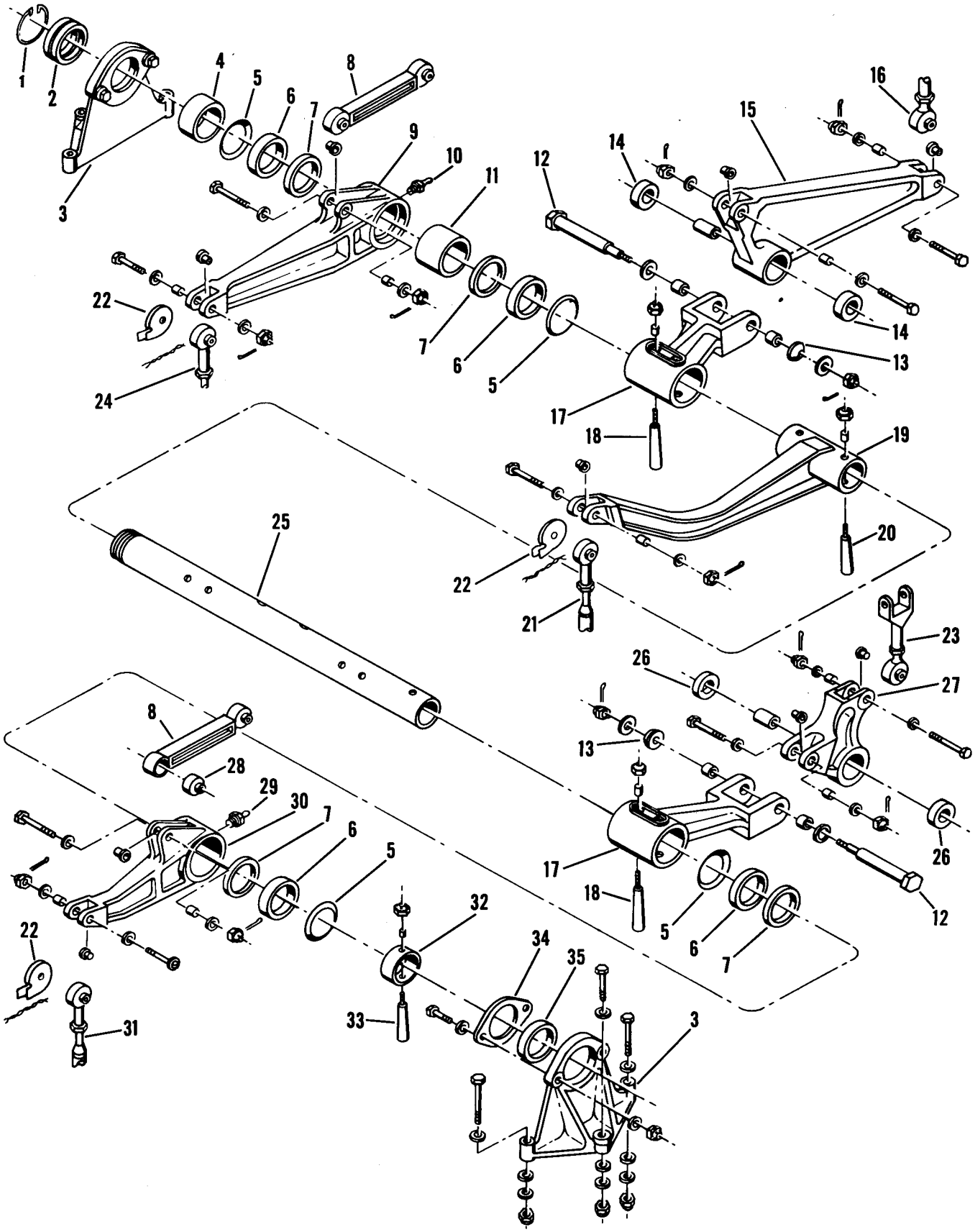

Figure 2-19. Aft Upper Bellcranks (Sheet 4 of 4)

NOMENCLATURE KEY FOR FIGURE 2-19 (Sheet 4 of 4)

1 Lock Ring
2 Torque Tube Nut
3 Support Assembly
4 Spacer
5 Grease Retainer
6 Bearing
7 Spacer
8 Differential Link
9 Longitudinal Bellcrank
10 Lubricator Fitting
11 Longitudinal Bellcrank Spacer
12 Bolt
13 Washer
14 Differential Bellcrank Bearing
15 Longitudinal Differential Bellcrank
16 Longitudinal Link
17 Collective Pitch Bellcrank
18 Taper Pin
19 Collective Pitch Arm
20 Taper Pin
21 Collective Pitch Control Rod
22 Control Rod Boots
23 Lateral Link
24 Longitudinal Control Rod
25 Torque Tube
26 Differential Bellcrank Bearing
27 Lateral Differential Bellcrank
28 Differential Link Bearing
29 Lubricator Fitting
30 Lateral Bellcrank
31 Lateral Control Rod
32 Spacer
33 Taper Pin
34 Bearing Retainer
35 Support Bearing

2-120. DISASSEMBLY. (See figure 2-20.) Disassemble the longitudinal bungee as follows:

a. Remove the bolts which attach bellcrank (22) to bungee (24).

CAUTION

The longitudinal bungee is assembled under high spring pressure. Keep the bungee spring compressed during disassembly.

b. Remove the bolts which attach fitting (18) to tube (17) and remove the fitting.

c. Slide tube (15), guide (20), spring (21), and retainer (16) from tube (17) as an assembly.

d. Remove the bolt which attaches stop (19), to tube (15) and slide the retainer, spring, and guide from the tube.

2-121. ASSEMBLY AND INSTALLATION. (See figure 2-20.) To assemble the bungee, reverse the disassembly procedure. Assemble all dissimilar metal parts with zinc chromate primer.

Note

The nut and bolt which secure stop (19) to tube (15) should be finger-tight only.

To install the longitudinal bungee, reverse the removal procedure. Rig as outlined in Flight Controls Rigging Procedure in this section.

2-122. ADJUSTMENT. Adjust the longitudinal bungee as outlined in Flight Controls Rigging Procedure in this section.

2-123. COLLECTIVE PITCH BUNGEES.

2-124. DESCRIPTION. (See figure 2-20.) The collective pitch bungee assemblies are attached to the forward and aft upper flight control assemblies. They aid the pilot in moving the collective pitch lever when the hydraulic flight control system is not operating.

2-125. REMOVAL—FORWARD BUNGEE. (See figure 2-20.) Remove the forward collective pitch bungee as follows:

a. Remove the bolt which attaches rod (12) to the collective pitch quadrant of the forward upper flight controls.

CAUTION

Take the load off the collective pitch bungee by compressing the bungee until the hole in the rod assembly (1) is visible between the mounting lugs of the fitting (6). Insert a 1/4-inch steel pin into the hole so that the rod assembly will be held in this position during removal of the bungee.

b. Remove the bolt which attaches bellcrank (13) to mounting fitting on fuselage structure.

c. Remove the bolts attaching bungee (14) to the mounting fitting on the fuselage structure and remove the bungee assembly.

2-126. REMOVAL—AFT BUNGEE. (See figure 2-27B.) Remove the aft collective pitch bungee as follows:

a. Disconnect control rod (2) from aft collective pitch quadrant (1).

CAUTION

Take the load off the collective pitch bungee by compressing the bungee until the hole in the rod assembly (1) is visible between the mounting lugs of the fitting (6). Insert a 1/4-inch steel pin into the hole so that the rod assembly will be held in this position during removal of the bungee.

b. Disconnect control rod (3) at bellcrank (6).

c. Remove bellcrank (7) and control rods (2 and 3) from structure.

d. Remove the bolts which attach bellcrank (6) and bungee assembly (5) to structure.

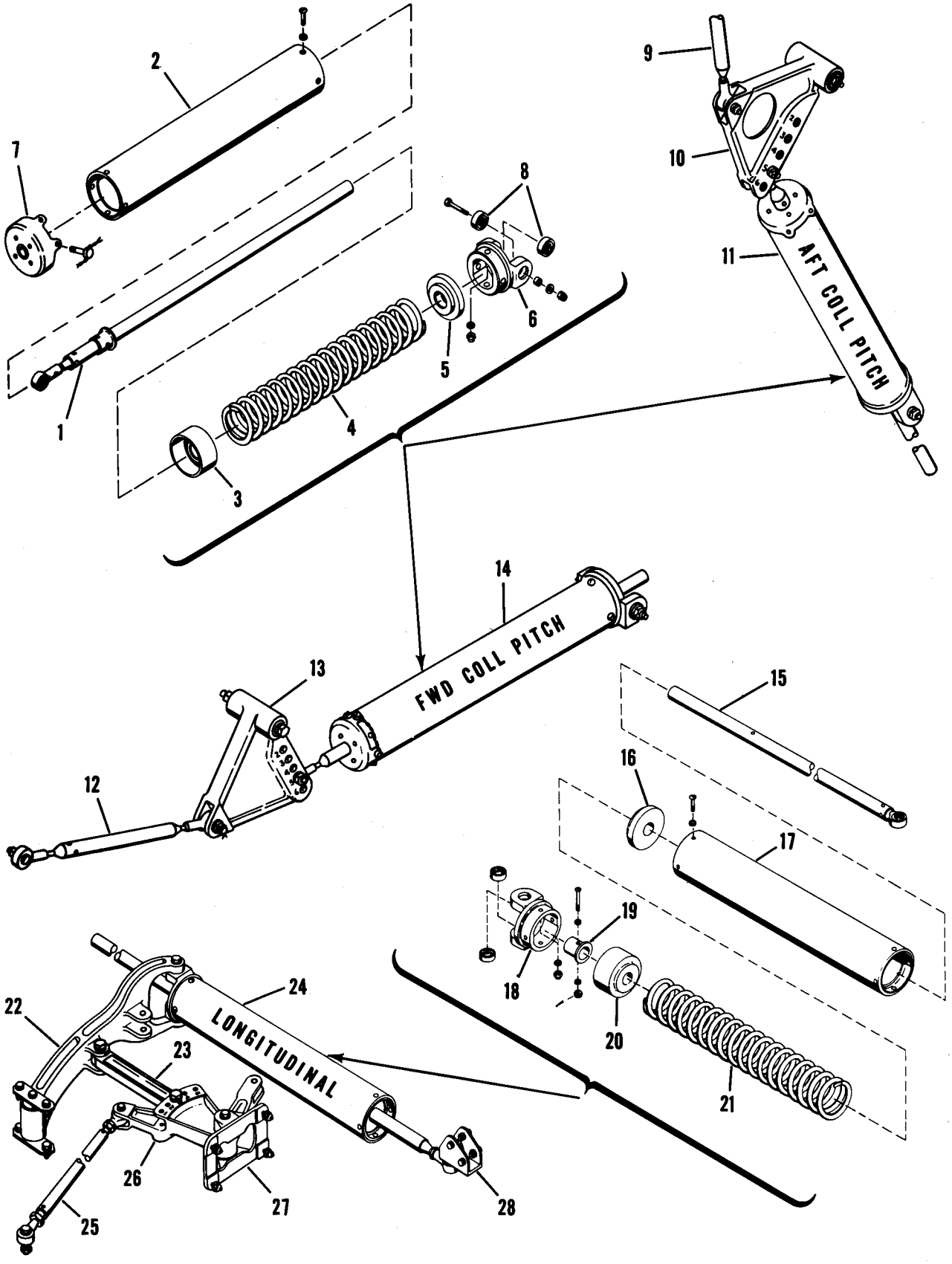

Figure 2-20. Flight Control Bungees

NOMENCLATURE KEY FOR FIGURE 2-20

1	Rod Assembly	15	Tube Assembly
2	Tube	16	Retainer
3	Guide	17	Tube Assembly
4	Spring	18	Fitting Assembly
5	Retainer	19	Stop
6	Fitting Assembly	20	Guide
7	Cap Assembly	21	Spring
8	Bearing	22	Idler Bellcrank
9	Rod Assembly	23	Link
10	Bellcrank	24	Bungee
11	Bungee	25	Rod Assembly
12	Rod Assembly	26	Bellcrank
13	Bellcrank	27	Mounting Fitting
14	Bungee	28	Mounting Fitting

e. Remove bellcrank (6) and bungee assembly (5).

2-127. DISASSEMBLY. (See figure 2-20.) The following procedure is applicable to both the forward and aft collective pitch bungee assemblies.

a. Remove the bolt attaching bellcrank (10) to the bungee (11).

b. Remove the bolts which attach fitting (6) to tube (2).

CAUTION

The collective pitch bungee is assembled under high spring pressure. Keep the bungee spring compressed during disassembly.

c. Slide retainer (5), spring (4), and guide (3) from tube (2).

d. Cut lockwire on fillister head screws and remove screws from cap assembly (7).

e. Remove cap assembly (7) and rod (1) from tube (2).

2-128. ASSEMBLY. (See figure 2-20.) To assemble the collective pitch bungees, reverse the removal procedure. Assemble all dissimilar metal parts with a coating of zinc chromate primer.

2-129. INSTALLATION. (See figure 2-20.) To install the forward and aft collective pitch bungees, reverse the removal procedure. Rig bungees as outlined in Flight Controls Rigging Procedure in this section.

2-130. ADJUSTMENT. Adjust the collective pitch bungees as outlined in Flight Controls Rigging Procedure in this section.

2-131. FLIGHT CONTROLS RIGGING PROCEDURE.

CAUTION

Do not attempt to move the cockpit controls while the rigging pins are installed or the pitch locks engaged.

TABLE 2-1A
SIMPLIFIED RIGGING

The information contained in this table summarizes the steps required to rig the flight controls. If detailed information is required, complete rigging instructions are given starting with paragraph 2-132.

Step	Unit to Adjust	Adjustment
I. Locking out Controls	Forward Upper Controls	Install rigging pin assembly (22E5076-1)
	Aft Upper Controls	Install rigging pin (22E5080-1)
	Lower Differential Controls	Install rigging pin (22E5079-1)
II. Rigging Cockpit Controls	Stick Positioner	Stick positioner indicator should be at 0 ±1/32 inch
	Directional Pedals	With pedals in neutral, the centerlines of the forward arm of the directional bellcrank and the idler bellcrank should lie parallel to the centerline of the helicopter. The hydraulic actuator piston should be at its mid-position of travel within ±0.06 inch
	Lateral Cyclic Control	With the lateral idler parallel to the centerline of the helicopter, center the hydraulic actuator valve at the clevis by eye. The cyclic sticks should be perpendicular to the cockpit floor
	Longitudinal Cyclic Control	Adjust the longitudinal rod assembly so that a centerline through the clevis hole and the pivot point of the longitudinal idler bellcrank will lie parallel to the nearest station frame. Center the hydraulic actuator valve by eye. Adjust the actuator link until the cyclic stick sockets are perpendicular to the cockpit floor

TABLE 2-1A (continued)
SIMPLIFIED RIGGING

Step	Unit to Adjust	Adjustment
	Collective Pitch Control	Adjust the length of the rod assembly so that the centerline of the clevis hole in the collective pitch arm will lie 0.51 inch aft of the torque tube centerline. Adjust the rod assembly until the clevis hole in the long arm of the idler bellcrank is 0.34 to 0.46 inches forward of the bellcrank pivot point. Center the hydraulic actuator within ±0.06 inch of its mid-position of travel. Center the hydraulic actuator valve by eye and adjust the connecting linkage as necessary to fit
III. Rigging Upper Controls	Forward Upper Controls and Aft Upper Controls	With the swash plate rigging tool installed, swash plate should tilt 2° ±7′ longitudinally and 0° ±7′ laterally. If rigging tool is not used, pivot points of longitudinal differential and collective pitch bellcranks and attachment points of the longitudinal differential and collective pitch links should lie in a plane parallel to the top of the transmission torque plate and 6.25 ±0.03 inches above it. After the swash plate has been properly adjusted, check to see that the angle of the pitch bearing housings, measured across the machined flats for the taper pins at the outer end of the housing, is the same (within ±0°5′) as the angle of the upper surface of the rotor hub
IV. Rigging Bungees	Forward and Aft Collective Pitch Bungees	The forward and aft collective pitch bungees must be identically adjusted. An initial bungee setting of zero moment 2 and mechanical advantage 5 should be sufficient to balance excessive residual forces in the collective pitch system. If this bungee setting is inadequate, refer to paragraphs 2-144 through 2-144E for additional rigging instructions
	Longitudinal Bungee	The pivot point of the idler bellcrank, hole number 3 of the idler bellcrank, and the link attachment hole on the longitudinal bellcrank should lie in a straight line. If bungee assist is insufficient at this setting, refer to paragraph 2-145 for additional rigging instructions

2-132. DESCRIPTION. The complete flight controls rigging procedure consists of the following:

Note

Disconnect all bungees and centering springs before attempting to rig the flight control system. The system can be rigged with the rotor blades installed.

a. Locking both ends of the cable systems and both swash plates in neutral.

b. Adjustment of the linkages which connect the cockpit controls and the cable systems.

c. Adjustment of the stops which limit cockpit control movement.

d. Adjustment of the bellcrank linkage which connects the swash plate and the cable systems.

e. Adjustment of the bungee and centering spring systems.

f. Installation and tensioning of cables.

g. Unlocking the system and checking control motions.

h. Flight testing the helicopter.

2-133. LOCKING OUT CONTROLS.

2-134. FORWARD UPPER CONTROLS. (See figure 2-21.) Lock out the forward upper controls with rigging pin assembly (22E5076-1) as follows:

a. Since the longitudinal-collective pitch pin is too long to feed directly into the right rigging support channel, back it through the oversized hole in the left rigging pin support.

b. When the pin clears the right support channels, insert the free end into the rigging hole in the right channel and slide it through the quadrants.

c. Secure the pin in position by placing one of the wire clips attached to the rigging pin over the longitudinal quadrant and through the holes in the pin.

d. Slide the left pin into the lateral quadrant and secure with the other wire clip provided.

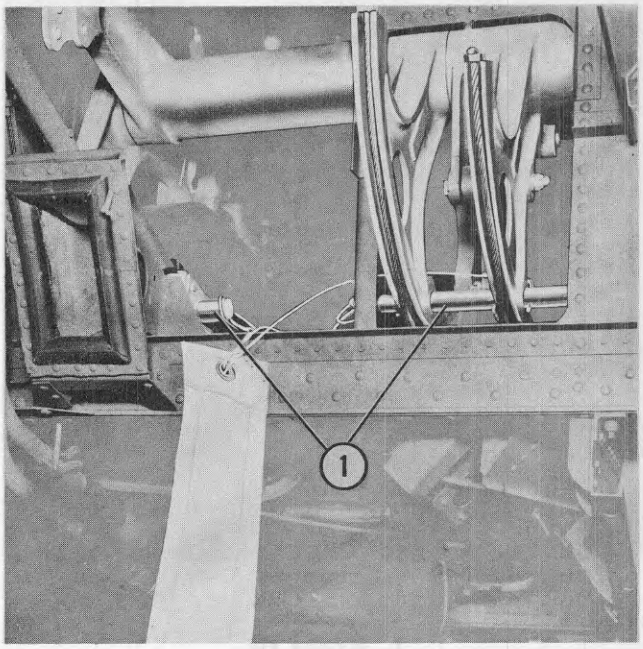

1 Rigging Pin

Figure 2-21. Forward Upper Flight Controls Rigging Pin

2-135. AFT UPPER CONTROLS. (See figure 2-22.) Insert rigging pin (22E5080-1) in the rigging holes of the aft upper quadrants.

2-136. LOWER DIFFERENTIAL CONTROLS. (See figure 2-23.) Install rigging pin (22E5079-1) in the lower differential controls as follows:

a. Install hat section support in position using 3/16-inch bolts or pins.

b. Insert the rigging pin through the hole in the support and through the longitudinal quadrant, the collective pitch arm, the collective pitch quadrant, the lateral quadrant, the lateral arm, and the hole in the upper support.

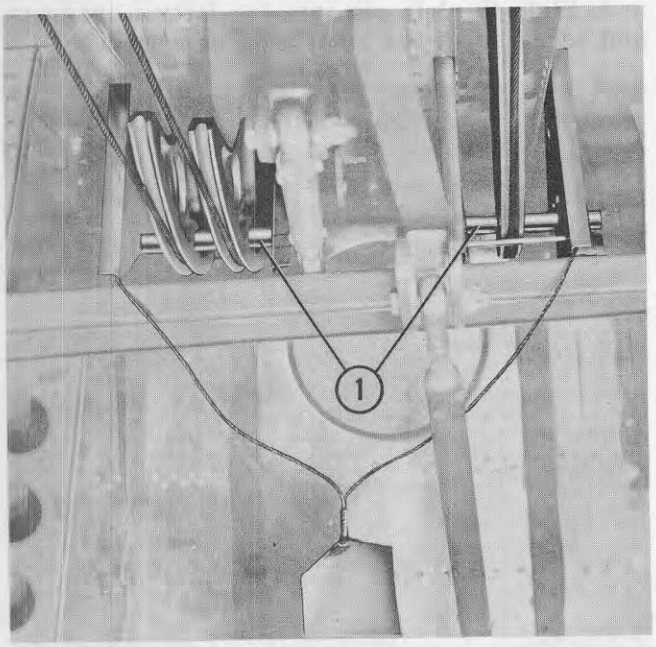

1 Rigging Pin

Figure 2-22. Aft Upper Flight Controls Rigging Pin

c. Lock the pin in position by twisting the handle over the inboard flange of the lower support.

2-137. RIGGING THE STICK POSITIONER. Rig the stick positioner as follows:

a. Lock the lower differential controls.

b. The positioner indicator should read 0 ±1/32 inch. If it does not, remove the bolt which locks the positioner torque tube to the lower universal joint and rotate the positioner wheel until the indicator reads 0 ±1/32 inch. Reinstall the bolt.

c. After rigging, the actuator must have 0.06-minimum additional travel from either extreme control positions before the internal stops are contacted.

2-138. RIGGING DIRECTIONAL PEDALS. (See figure 2-24.) Rig the directional pedals as follows:

a. Lock the lower differential controls.

b. Adjust rod (7) so that bellcrank (6) is parallel to the centerline of the helicopter.

c. Disconnect link (4).

d. Set the pilot's and co-pilot's pedals in the center adjustment hole of each adjustment plate.

e. Clamp the pedals together so that they fall in a straight line parallel to fuselage station planes.

f. Adjust the rod assemblies (2 and 3) until the forward arm of bellcrank (1) is parallel to the centerline of the helicopter.

g. Center the hydraulic actuactor piston rod so that it is within ±0.06 inch of its mid position of travel.

h. Adjust link (4) to fit between the bellcrank (1) and the hydraulic actuator valve clevis (5). There is ±0.06 inch lost motion at the valve clevis.

Note

Center the hydraulic actuator valve by eye when adjusting link (4). Extreme off-center positioning of the valve could result in a 0.150 inch pedal position error.

2-139. RIGGING LATERAL CYCLIC CONTROLS. (See figure 2-25.) Rig the lateral cyclic control as follows:

a. Lock out the lower differential control unit.

b. Disconnect rod (2) and line up lateral idler (5) parallel to the centerline of the helicopter.

Note

The friction in the hydraulic actuator will hold the bellcrank in the desired position.

c. Center the hydraulic actuator valve at the actuator clevis by eye (0.060 inch lost motion).

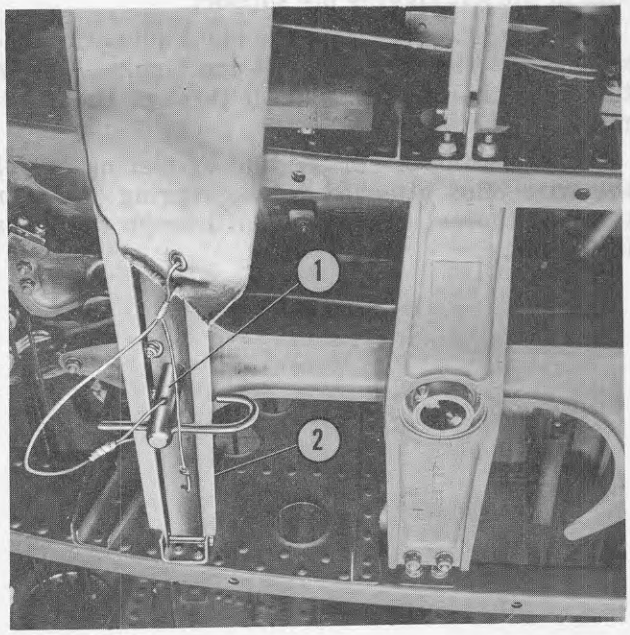

1 Rigging Pin 2 Rigging Pin Support

Figure 2-23. Lower Differential Controls Rigging Pin

1 Directional Bellcrank
2 Rod Assembly
3 Rod Assembly
4 Link
5 Directional Actuator
6 Idler Bellcrank
7 Rod Assembly
8 Rigging Pin (22E5079-2)

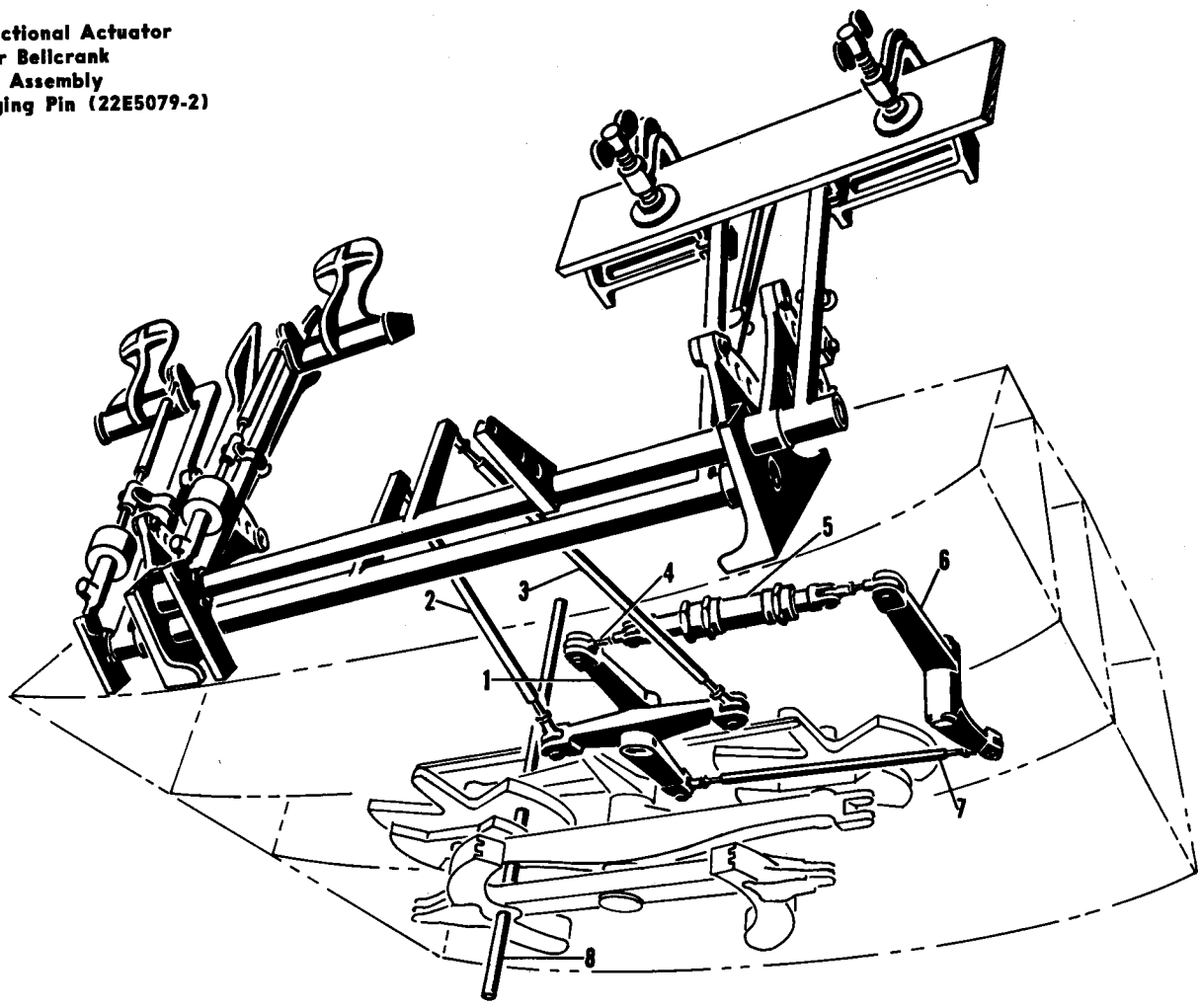

Figure 2-24. Rigging Directional Controls

d. Adjust rod (2) to the proper length and connect it to the lateral arm (1) and the hydraulic actuator (3).

e. With lateral idler (5) parallel to the centerline of the helicopter, adjust link (4) until the cyclic sticks are perpendicular to the cockpit floor.

2-140. RIGGING LONGITUDINAL CYCLIC CONTROLS. (See figure 2-25.) Rig the longitudinal cyclic control as follows:

a. Lock out the lower differential controls.

b. Disconnect link (7).

c. Adjust rod (9) until the clevis hole for link (7) and the pivot point for bellcrank (8) line up parallel to a station frame.

d. Adjust link (7) so that the centerlines of cyclic stick sockets are parallel to the station frame. Center the hydraulic actuator valve (6) by eye before adjusting the length of link (7) (0.060 inch lost motion).

2-141. RIGGING COLLECTIVE PITCH CONTROL. (See figure 2-26.) Rig the collective pitch control as follows:

a. Lock out the lower differential controls.

b. Disconnect link (5).

c. Adjust the collective pitch lever so that the clevis hole in the pitch arm (6) is 0.51 $\pm$0.03 inch aft of the centerline of the collective pitch torque tube. Use the collective pitch friction lock to hold the lever in the rigging position.

d. On YH-21 and H-21A helicopters, adjust rod assembly (1) so that the clevis centerline is 0.34–0.46 inch forward of the bellcrank pivot point.

1 Lateral Arm Assembly
2 Rod Assembly
3 Lateral Actuator
4 Link
5 Lateral Idler Bellcrank
6 Longitudinal Actuator
7 Link
8 Longitudinal Idler Bellcrank
9 Rod Assembly
10 Rigging Pin

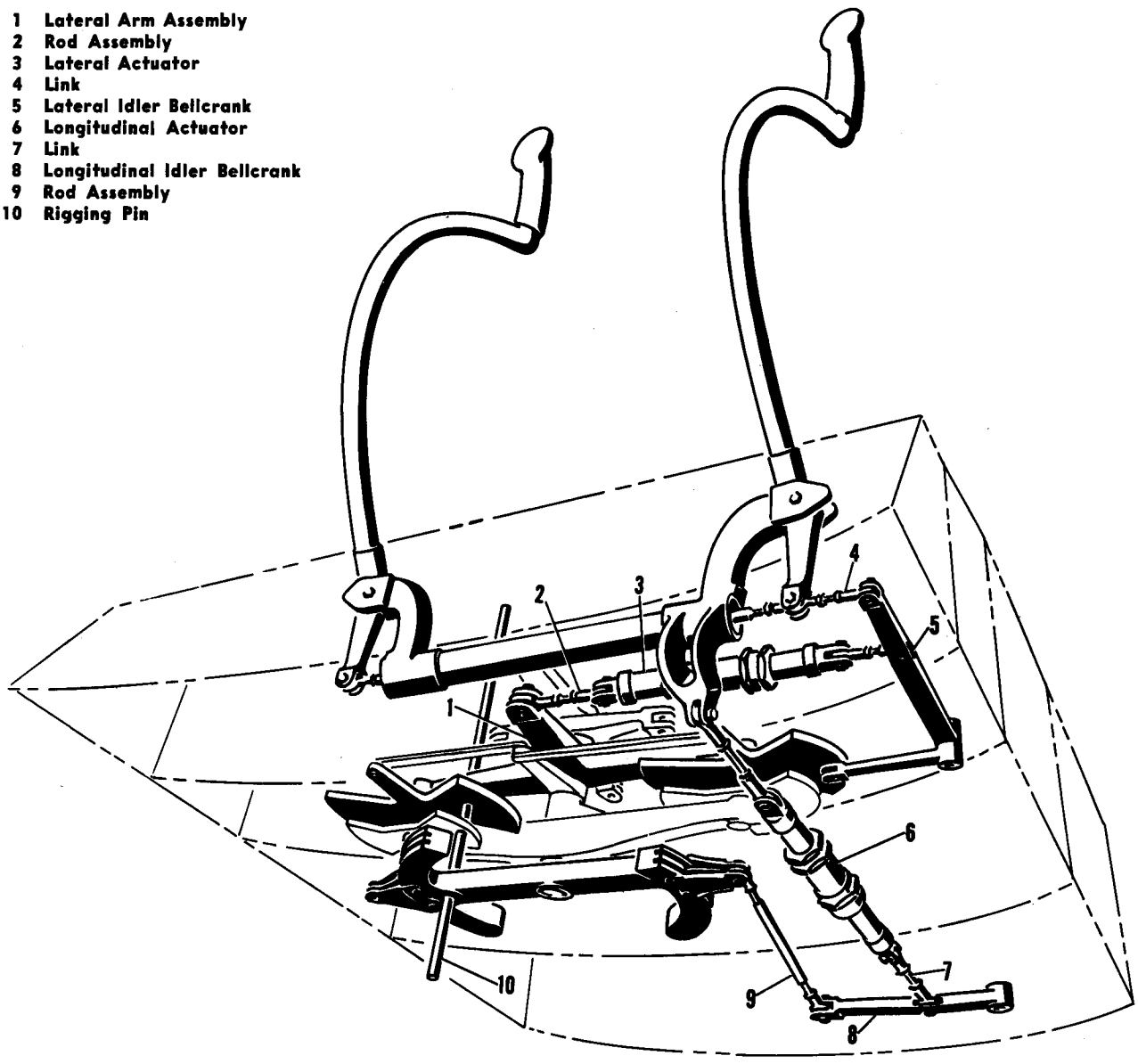

Figure 2-25. Rigging Cyclic Controls

e. On H-21B and H-21C helicopters, adjust rod assembly (1) so that the clevis centerline is 0.46 inch forward of the bellcrank pivot point.

f. Adjust the hydraulic actuator so that it is in its mid-travel position (within ±0.06 inch). Adjust the length of link (5) and reconnect.

g. Center the hydraulic actuator valve by eye (±0.060 inch lost motion) and adjust rod (3) to fit between the actuator (4) and the idler bellcrank (2).

2-142. RIGGING UPPER CONTROLS. (See figure 2-27.) Rig the forward and aft upper controls as follows:

a. Disconnect rod assemblies (2, 3, and 4).

b. Mount the two half-sections of the swash plate rigging tool (6) around the guide bolts of the slider assembly. The section having the arm marked FWD should be installed on the forward side of the slider.

CAUTION

The ring of the tool must bear evenly and firmly against the lower collar of the slider assembly.

c. Install the clamps in the arms of the rigging tool and tighten until the swash plate is seated firmly on the bearing pads of the arms. *Do not overtighten the clamps.* The swash plate rigging tool automatically imparts a longitudinal tilt of 2° ±0° 7′ and a lateral tilt of 0° ±0° 7′ to the swash plate.

d. Insert the rigging pin (1) through the quadrants of the upper controls.

e. Adjust the length of rod assembly (2) to fit between the arm of the lateral quadrant and the lateral bellcrank, and reconnect it.

Note

Check inspection hole on the adjustable rod end bearing of each rod assembly after adjusting, to see if the hole is still blocked by the threads of the rod end. If a piece of lockwire can be inserted through the inspection hole, the safety margin of the rod assembly has been exceeded. Check to see if the correct rod assembly is being installed.

f. Adjust the length of rod assembly (3) to fit between the collective pitch differential bellcrank and the collective pitch arm and reconnect it.

g. Adjust the length of rod assembly (4) to fit between the arm of the longitudinal quadrant and the longitudinal bellcrank and reconnect it.

Note

When the swash plate is correctly positioned, the bottom of the swash plate should be 8.468 (8-15/32) inches above the top of the transmission case at the base of the slider assembly when measured from the lateral connection point on the actuating ring.

h. If no swash plate rigging tool is available for locking out the swash plate, adjust the rod assemblies 2, 3, and 4) until the points A, B, C, and D lie in the same plane. Points A and D are the pivot points of the longitudinal differential and collective pitch bellcranks. Points B and C are the attachment points of the longitudinal differential and collective pitch actuating links. The points are located at the bolt centers at each location. The plane of these points must be parallel to and 6.25 $\pm$0.03 (6-1/4 $\pm$1/32) inches above the top surface of the transmission torque plate.

i. Mount a bubble protractor on the radius of the swash plate through the connection point of the longitudinal link. Increase the length of the longitudinal link until the bubble protractor indicates the swash plate tilts at an angle of 2° $\pm$0°7′. When the swash plates are correctly rigged, the forward swash plate will tilt from the longitudinal link toward the rear of the helicopter and the aft swash plate will tilt from the longitudinal link toward the nose of the helicopter.

j. After rigging the swash plate, set the pitch bearing housing at the proper angle. Remove the swash plate rigging tools.

k. Rotate the hub so that the lower connection of one of the pitch links is directly in line radially with the lateral connecting clevis on the actuating ring.

l. Move the pitch bearing housing to be measured about the horizontal and vertical pins until the droop stop and the lead stop are contacted.

1 Rod Assembly
2 Idler Bellcrank
3 Rod Assembly
4 Hydraulic Actuator
5 Link Assembly
6 Collective Pitch Arm
7 Rigging Pin

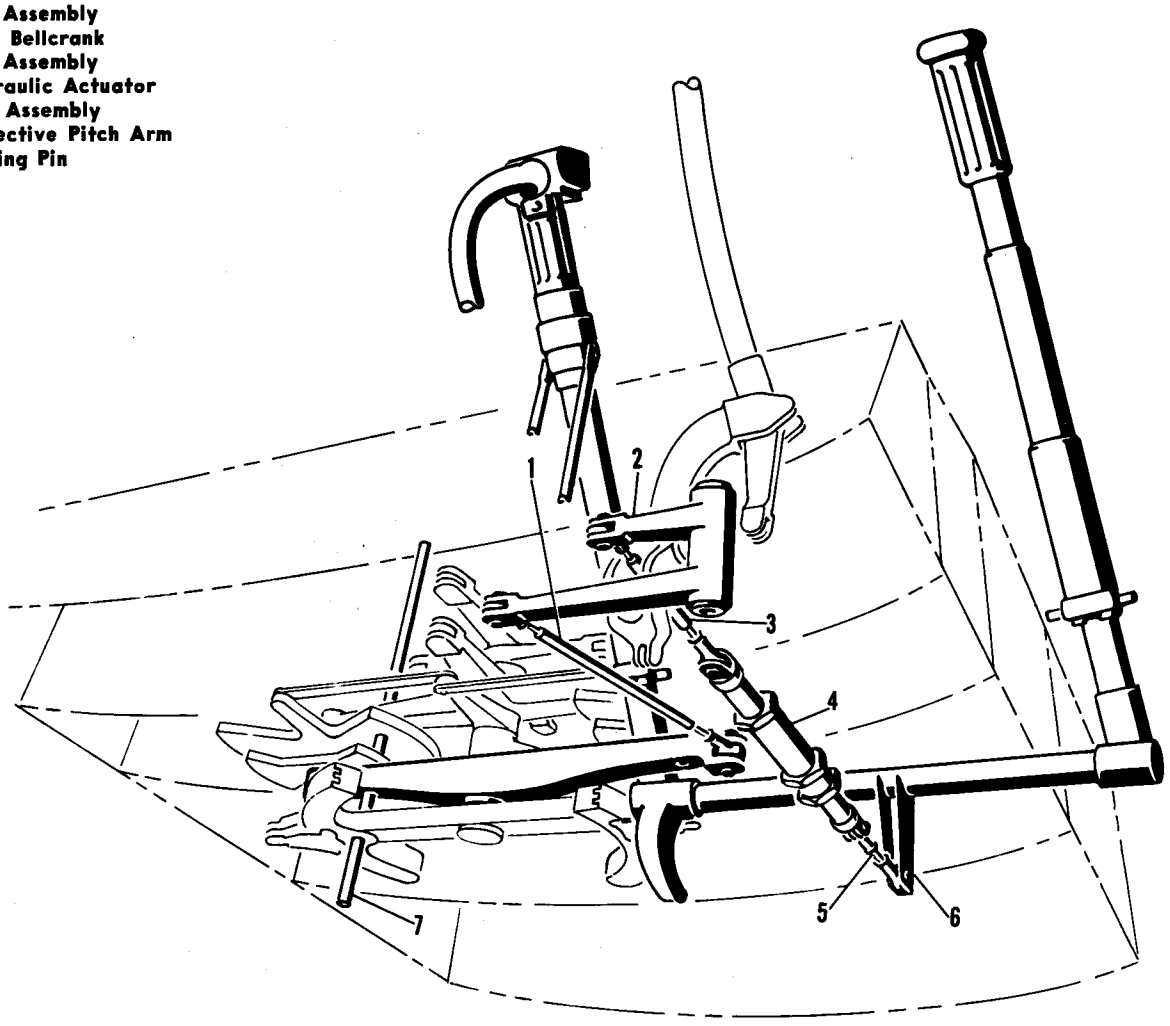

Figure 2-26. Rigging Collective Pitch Controls

m. Move the pitch link which was positioned on the lateral connecting clevis so that the angle of pitch bearing housing is the same as the angle on the upper surface of the rotor hub (within ±0° 5′). The angle should be measured across the machined flats for the taper pins at the outer end of the housing.

Note

If the helicopter is leveled, these angles should be 0° 0′.

n. Repeat the procedure for the rest of the blades.

2-143. BUNGEE ADJUSTMENT.

2-144. COLLECTIVE PITCH BUNGEE. (See figures 2-27A, 2-27B, and 2-28.) At initial installation of the bungees, prior to flight test of the helicopter, the bungees (2, figure 2-27A and 5, figure 2-27B) should be connected to hole number 5 of the idler bellcranks (3, figure 2-27A and 6, figure 2-27B). The connecting rods (4, figure 2-27A and 3, figure 2-27B) should be attached to hole number 2 of the collective pitch quadrant (5, figure 2-27A) and collective pitch idler bellcrank (7, figure 2-27B). This setting should be adequate to balance out any aerodynamic loads in the collective pitch system. However, should further adjustment of the bungees be necessary, a total of 15 zero moment and mechanical advantage point combinations are available.

Note

The forward and aft collective pitch bungees should be adjusted identically.

The mechanical advantage of the bungee system determines the amount of assist the bungee will provide for a given zero moment setting.

NOTE

The swash plate rigging tool for the aft rotor is painted YELLOW and marked AFT ROTOR ONLY. The swash plate rigging tool for the forward rotor is painted RED and marked FORWARD ROTOR ONLY.

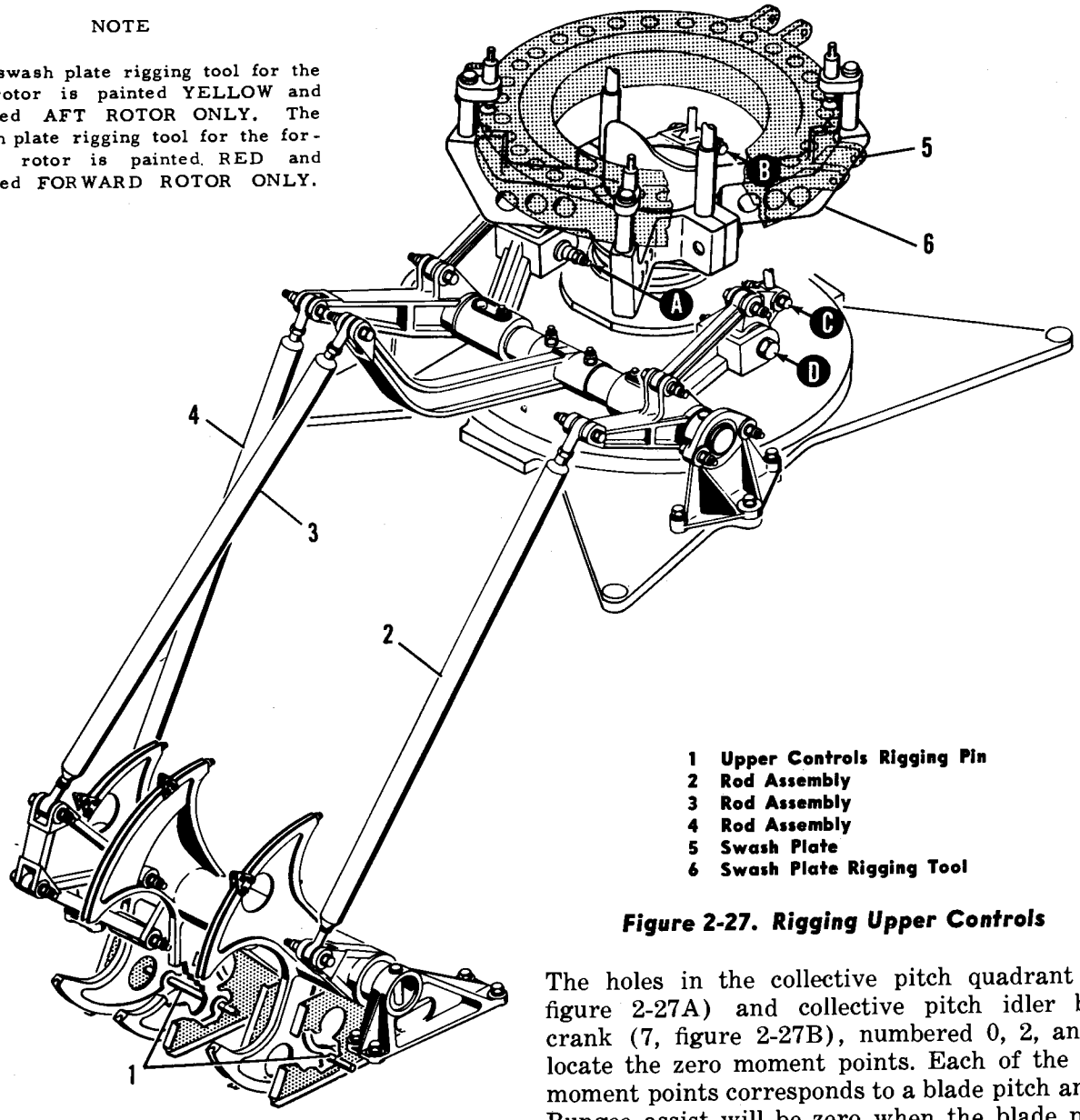

1 Upper Controls Rigging Pin
2 Rod Assembly
3 Rod Assembly
4 Rod Assembly
5 Swash Plate
6 Swash Plate Rigging Tool

Figure 2-27. Rigging Upper Controls

The five holes of the idler bellcranks (3, figure 2-27A and 6, figure 2-27B), numbered 2, 3, 4, 5, and 6 are the mechanical advantage points of the bungee system. Increasing the mechanical advantage by moving the bungee to a higher numbered hole will increase the amount of bungee assist. Decreasing the mechanical advantage by moving the bungee to a lower numbered hole will decrease the amount of assist.

The zero moment is the point at which bungee assist is equal to zero assist at the pilot's grip. The holes in the collective pitch quadrant (5, figure 2-27A) and collective pitch idler bellcrank (7, figure 2-27B), numbered 0, 2, and 4, locate the zero moment points. Each of the zero moment points corresponds to a blade pitch angle. Bungee assist will be zero when the blade pitch reaches the value of the zero moment. For instance, if the zero moment setting of the system is 2, the bungee assist will be zero when the blade pitch is at two degrees. All assist for rotor blade pitch below two degrees will be down; that is, tending to pull the collective pitch lever down. When the blade pitch is increased beyond the zero moment setting, all bungee assist will be up; that is, tending to raise the collective pitch lever.

CAUTION

To reduce the possibility ot over-center travel of the collective pitch bungee bellcranks, which can result in complete retraction of the bungee rod into the

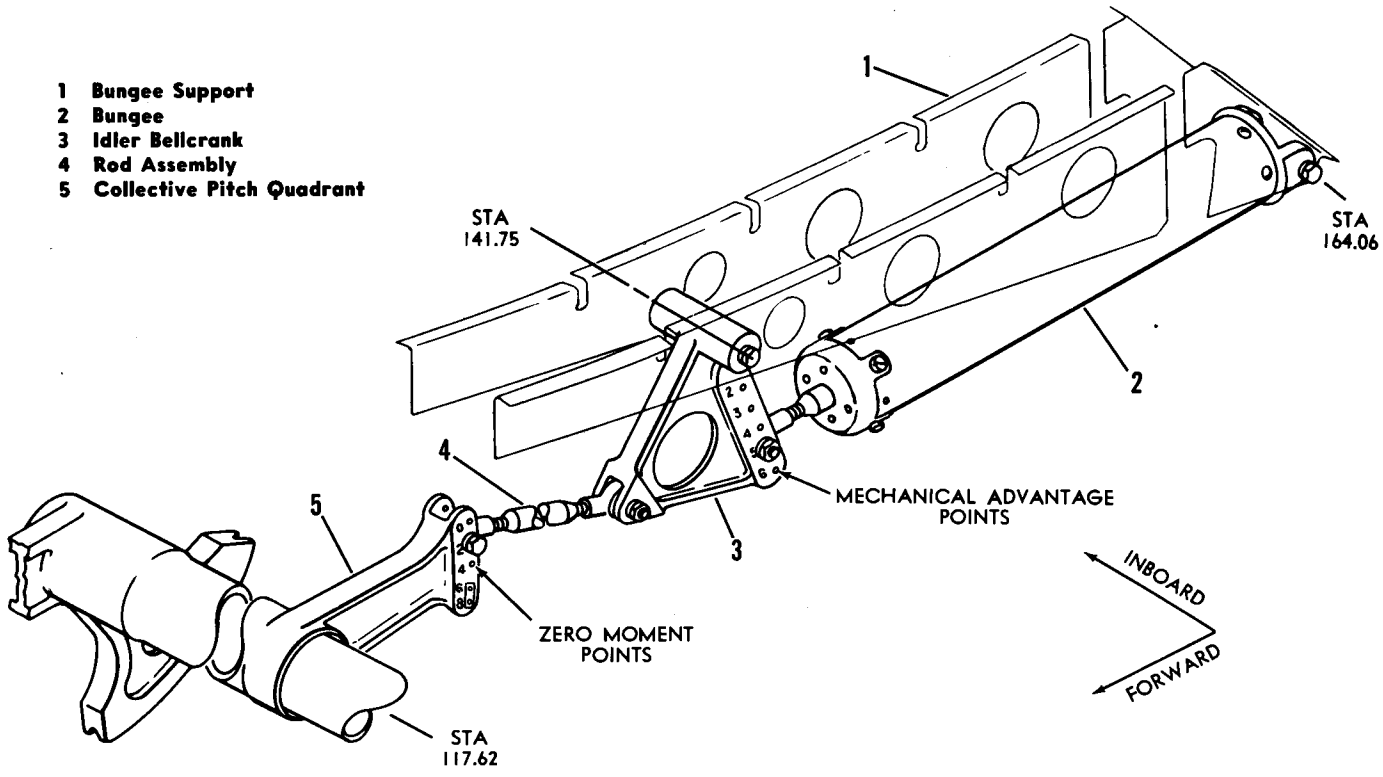

Figure 2-27A. Forward Collective Pitch Bungee Adjustment

capsule and jamming of the control system, the number 6 and 8 zero moment holes of both the forward and aft bungee systems should be locked out.

The graphs in figure 2-28 are given to aid maintenance personnel in determining the best bungee setting to eliminate excessive forces in the collective pitch system. The sample problem in the following paragraphs is provided to demonstrate the procedure to be followed when making bungee adjustments.

2-144A. SIMPLIFIED ADJUSTMENT PROCEDURE. A simplified procedure for making adjustments to the collective pitch bungees is as follows:

a. At any given setting of zero moment and mechanical advantage, make adjustments to the mechanical advantage setting as follows:

1. If excessive up forces exist, reset the mechanical advantage to the next lower numbered hole.
2. If excessive down forces exist, reset the mechanical advantage to the next higher numbered hole.

b. If adjustment of the mechanical advantage is not sufficient to satisfactorily relieve forces, make adjustments to the zero moment setting as follows:

1. If excessive up forces exist, reset the zero moment to the next higher numbered hole.
2. If excessive down forces exist, reset the zero moment to the next lower numbered hole.
3. Repeat step a, paragraphs 1 and 2 as necessary until a satisfactory condition is obtained.

c. If the excessive forces in the collective pitch system cannot be eliminated by the simplified adjustment procedure, the detailed procedure described in the following paragraph must be adhered to.

2-144B. DETAILED ADJUSTMENT PROCEDURE. The collective bungees are adjusted as follows:

a. With the helicopter on the ground and engine off, place the collective pitch lever in the full down position. Place a reference mark on the center of the lever shaft and a similar mark on the shield opposite it. Move the lever to the full up position and again reference mark the shield opposite the mark on the lever.

b. Divide the space between the marks into eight equal spaces. The marks between the full down and full up position will have a blade pitch value two degrees greater than the next lower

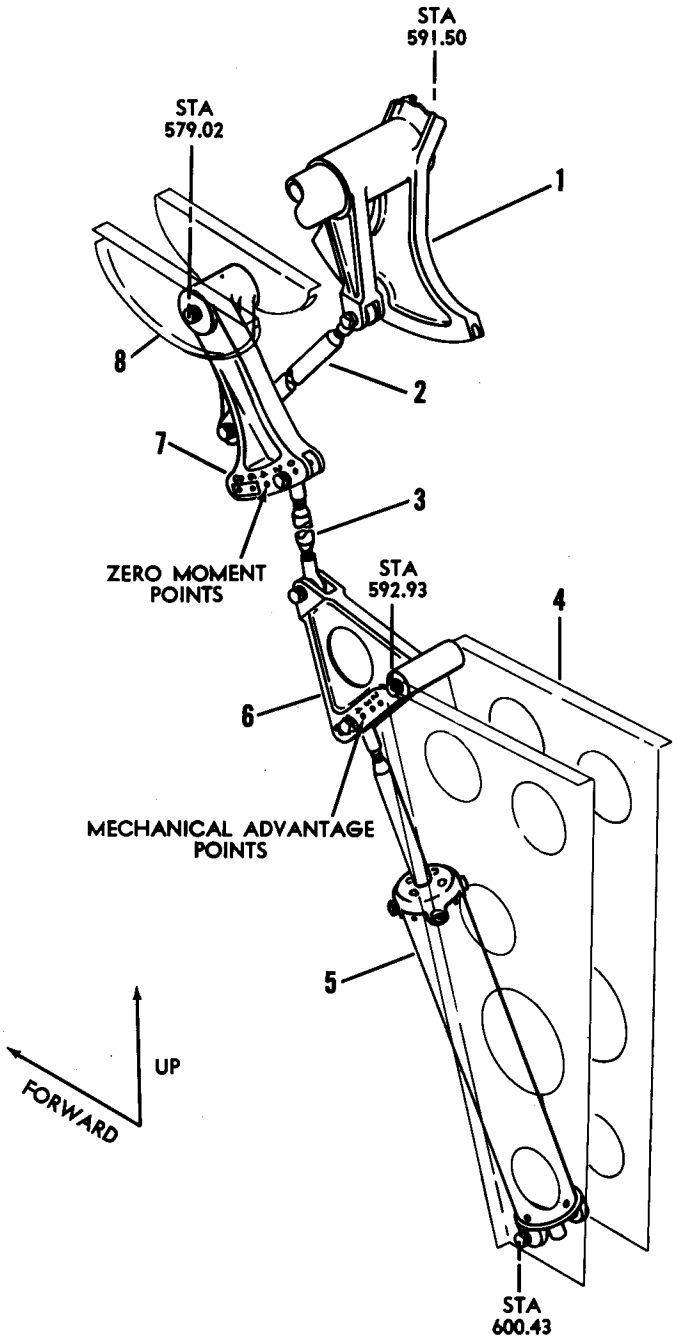

1 Collective Pitch Quadrant
2 Rod Assembly
3 Rod Assembly
4 Bungee Support Bracket
5 Bungee
6 Idler Bellcrank
7 Idler Bellcrank
8 Bellcrank Support Bracket

Figure 2-27B. Aft Collective Pitch Bungee Adjustment

mark, that is, the first mark above the full down position will be equivalent to two degrees of blade pitch, the next mark four degrees of blade pitch and so on.

c. Place a reference mark at the center of the throttle grip on the co-pilot's lever.

d. With a qualified helicopter pilot at the controls, start the engine and engage the rotors. When the rotors have reached operating speed, increase the collective pitch. Using a loadmeter or a fish scale, measure and record the amount and direction of the force required to move the collective pitch lever for the points on the shield which lie in the normal flight range. The force measurements should be taken at the reference mark on the co-pilot's grip.

Note

If a loadmeter or fish scale is not available to make force measurements, it is permissible to estimate the amount of forces present in the system. However, estimation of forces should be done only by persons who are familiar with this type of helicopter.

e. When taking the force measurements required in step d., it will be necessary to fly the helicopter. All flights made to take bungee force measurements should be made with the hydraulic flight controls OFF.

f. After the force measurement check flight has been completed and the helicopter is again on the ground, check the bungee installation to determine the zero moment and mechanical advantage points being used. Referring to the graphs in figure 2-28, find the curve which represents the amount of assist provided by the bungee for the existing zero moment and mechanical advantage setting.

g. Plot the curve of the actual forces present in the lever in its proper position on the graph. If the forces present in the system are up in direction, the force curve will lie below the existing curve. If the forces present are down in direction, their curve will lie above the existing curve.

2-144C. SAMPLE PROBLEM. (See figure 2-27C.) The flight check reveals the following forces to be present in the collective pitch system through the normal operating range:

Ref Mark No.	Blade Pitch	Force (pounds)	Direction
1	0°	30	Up
3	4°	14	Up
5	8°	21	Up
7	12°	28	Up

Note

The values recorded for the marks indicated above will be sufficient to determine the curve. The higher collective

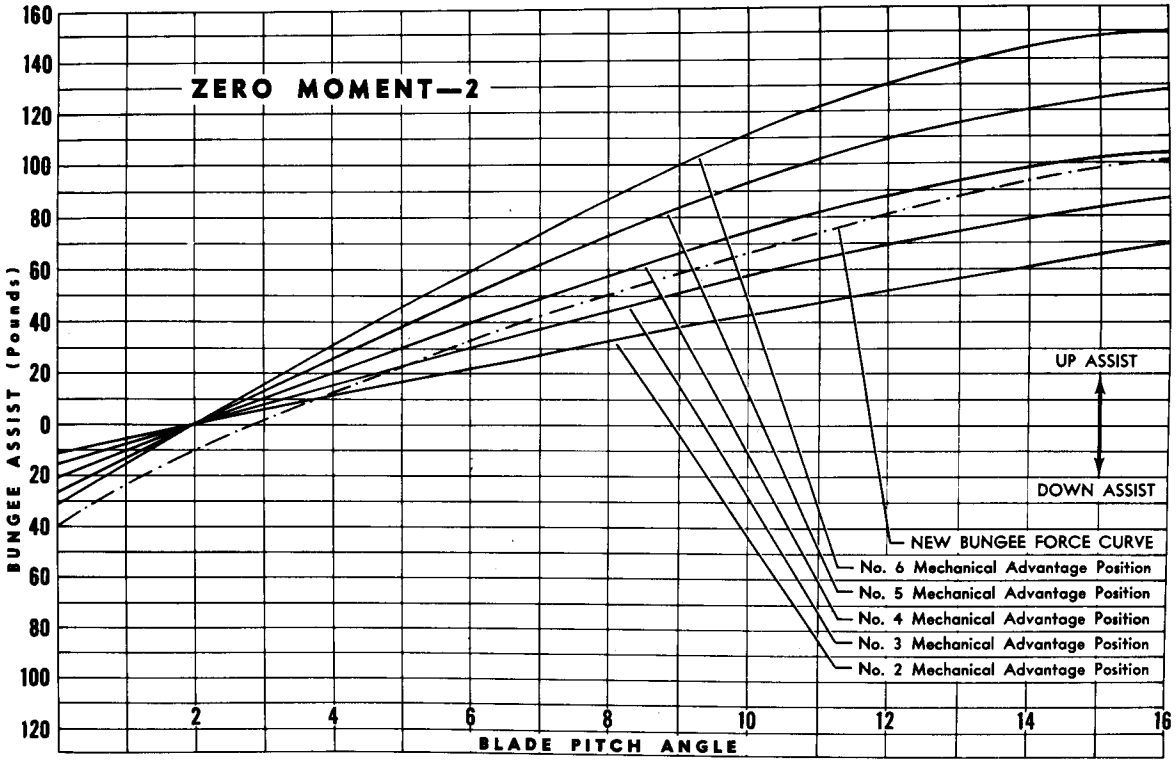

Figure 2-27C. Sample Bungee Adjustment Graph

pitch ranges are not used for normal flight operations.

a. The bungee setting check reveals the bungee to have a zero moment of 2 and a mechanical advantage setting of 5. Referring to the sample graph, figure 2-27C, find the curve which represents the amount of assist for the existing bungee setting of zero moment 2, mechanical advantage 5.

b. Since the excessive force is upward in direction, the curve must be plotted below the curve for the existing bungee setting. If none of the established curves for the given zero moment of 2 coincide with or approximate the new force curve, a change in the zero moment setting as well as in the mechanical advantage setting may be indicated. Therefore, the new curve should be copied on each of the other zero moment graphs until a close approximation of the new curve can be found. The established curve which coincides with or most nearly approximates the new curve will determine the best bungee setting to eliminate the excessive up forces.

c. After plotting the new force curve, it can be seen that the new curve falls between the curves for mechanical advantages of 3 and 4 on the graph for zero moment 2. However, at the two-degree blade pitch angle, the force line falls approximately 10 pounds below the desired value. Therefore, a further check should be made to see if changing the zero moment will have a more satisfactory effect on the bungee assist. In this case, however, we find after plotting the new force curve on all the other zero moment graphs that further adjustment of the zero moment would not materially improve the bungee assist. Either the 3 or the 4 mechanical advantage point will decrease the up assist sufficiently to eliminate the excessive force.

Note

In the above problem, the number 4 mechanical advantage point would probably be chosen since it is desirable to have some up residual force present in the system to provide feeling of the controls. However, the residual force should not exceed 12 pounds in either direction.

2-145. LONGITUDINAL BUNGEE. (See figure 2-28A.) At initial installation, prior to flight test of the helicopter, the longitudinal bungee should be rigged with the link assembly (8) attached to the longitudinal bellcrank (point A) and hole number 3 (point B) of the idler (7). The pivot point of the idler (point C) and points A and B should all lie in a straight line when the

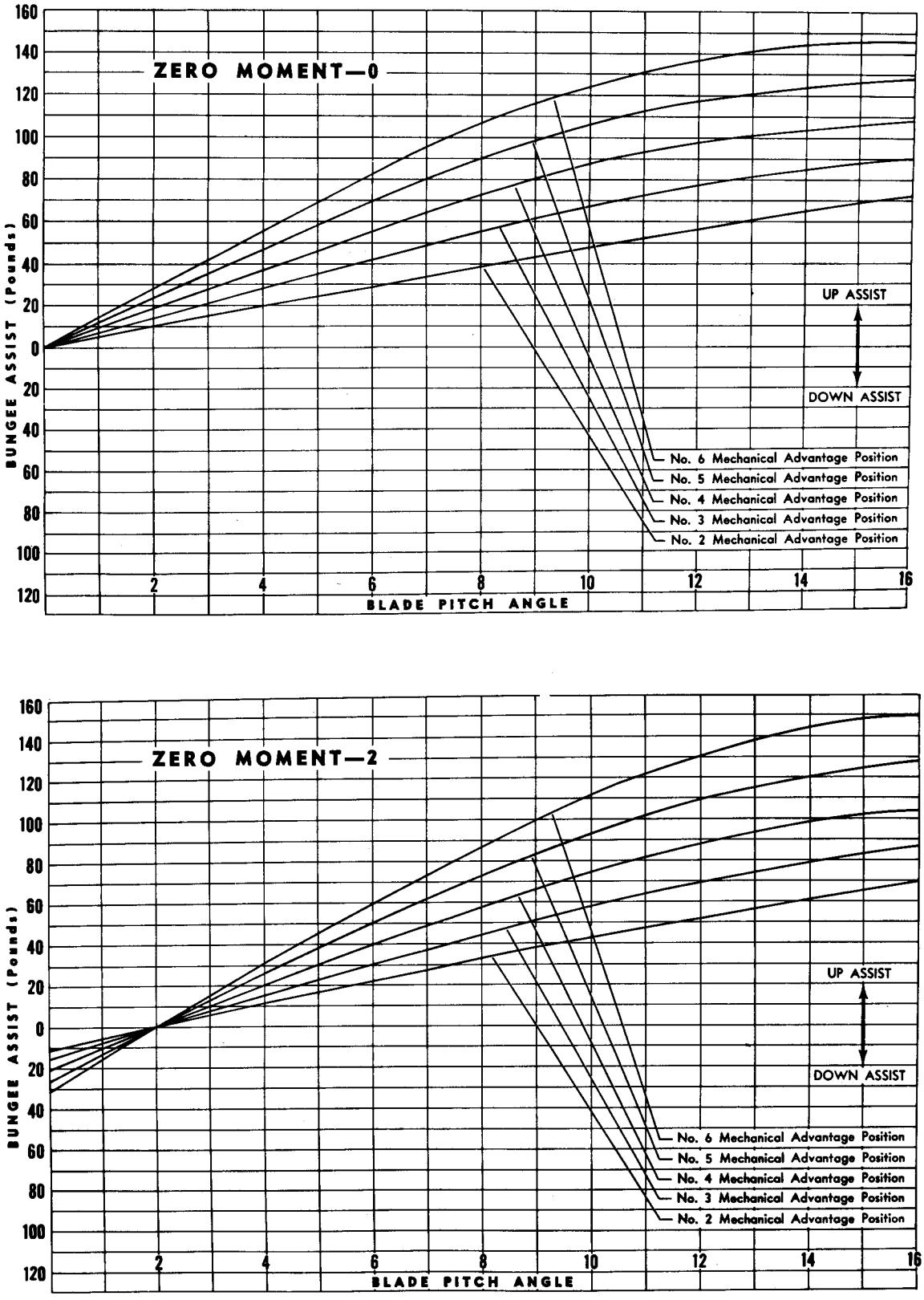

Figure 2-28. Collective Pitch Bungee Adjustment Graphs (Sheet 1 of 2)

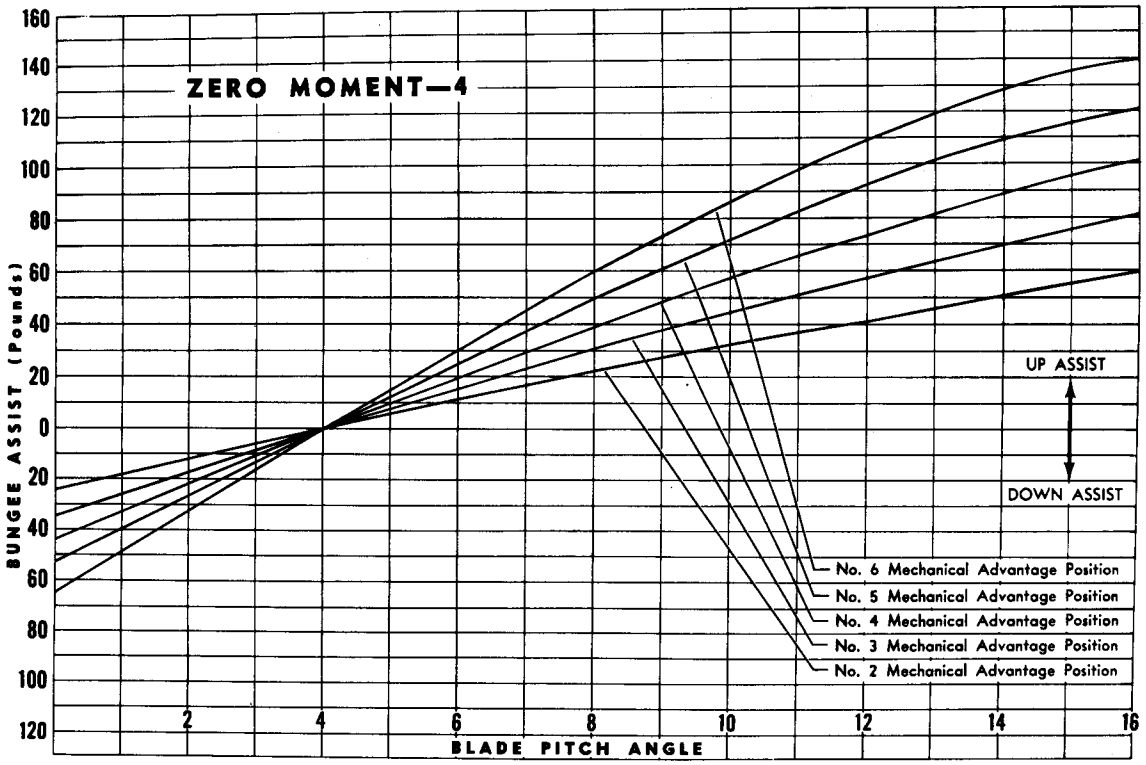

Figure 2-28. Collective Pitch Bungee Adjustment Graphs (Sheet 2 of 2)

bungee is properly rigged and the cyclic stick is in the neutral position. With the bungee connected to the longitudinal control system in this manner, the cyclic stick will have its zero moment in the neutral position and bungee force will be distributed equally forward and aft of neutral. This setting should be adequate to balance out any loads in the longitudinal control system. However, if further adjustment of the bungee is necessary, the zero moment may be changed by connecting the link assembly (8) to one of the four other holes in the idler (7). Changing the zero moment changes the distribution of the bungee force so that the bungee assist will be of a different magnitude when the cyclic stick is forward of neutral by any given amount than when the stick is aft of neutral by the same amount. The table in figure 2-28A lists the amount and direction of force supplied for the various zero moment settings when the bungee is installed as a tension and as a compression capsule.

2-145A. ADJUSTMENT PROCEDURE. (See figure 2-28A.) The longitudinal bungee can be adjusted to function either as a tension capsule or as a compression capsule. When assembled as a tension capsule, the bungee will act in the direction of cyclic stick movement and away from the straight line position of points A, B and C. That is, if the cyclic stick is moved forward of its neutral position, the bungee assist will be exerted in a forward direction, tending to move the stick forward. If the stick is moved aft of neutral, the bungee assist will tend to move the stick aft. This results in an unstable bungee condition, since the bungee force is always acting to keep points A, B, and C out of the straight line condition. If the bungee is assembled as a compression capsule, the bungee force will act to keep points A, B and C in a straight line. Thus, when the cyclic stick is moved forward or aft of its neutral position, the bungee acts against the stick to return it to neutral and bring points A, B and C back into a straight line. The bungee is normally assembled as a tension capsule, but if it is desired to make a compression capsule of the unit, proceed as follows:

a. Remove the bungee from the helicopter as described in paragraph 2-119.

b. Slide the tube (15, figure 2-20) through the spring and housing until the stop (19, figure 2-20) can be reached. Remove the stop.

c. Remove the tube (15, figure 2-20) from the spring and housing. Reverse the stop and slide onto the tube until the hole in the stop lines up with the hole in the tube nearest the rod end bearing. Bolt the stop to the tube.

d. Slide the tube back through the spring and housing and replace the bungee in the helicopter.

e. To change the bungee back to a tension capsule, reverse the above procedure, attaching the stop to the tube in its original position.

2-145B. SAMPLE PROBLEM. Flight test of the helicopter has revealed that excessive force is required to move the cyclic stick longitudinally forward and aft of neutral.

a. Fly the helicopter and measure the forces present in the cyclic stick with a loadmeter. Loadmeter readings should be taken at the center of the cyclic stick grip when the thumb switch of the grip is 1-1/2 inches aft of the stick center of travel (hovering position) and when the thumb

switch is 3-1/2 inches forward of the stick center of travel (80 knot cruise condition).

Note

If a loadmeter is not available, a fish scale attached to the center of the cyclic stick grip may be used to measure forces present in the system. Flights to determine bungee force should be made with hydraulic flight controls OFF.

b. Flight test reveals that when the cyclic stick is 3-1/2 inches forward of its center of travel, 10 pounds of force are present and when the stick is moved to 1-1/2 inches aft of the center of travel, eight pounds of forward force are present in the system.

c. Upon checking the bungee, it is found that the link assembly is attached to hole number 3 of the idler and that the bungee is assembled as a tension capsule.

CAUTION

When the capsule is in tension (see figure 2-28A), a rope (9) must be tied to the longitudinal bellcrank (1) and pulled in the direction shown to relieve the load on the link (8) so it can be removed or adjusted. The rope must be released gradually to prevent damage to the installation or injury to personnel making the adjustment.

d. Using the above information, refer to the tables in figure 2-28A to determine the best link setting. Under the column headed "If Link is Mounted in Hole", find the number representing the existing setting for the bungee. Under the column headed "Forces in Stick" find the force range which will include the known forces for the existing setting. Read across to the last two columns entitled "Adjust Link to Hole" and "And the Bungee Capsule" to find the new link setting and type of capsule to be used. In the case of the sample problem, the link should be moved to hole 2 and the tension capsule retained.

Note

If, when adjusting bungee, the forces do not fall within any of the limits given in tables in figure 2-28A, check the entire control system for binding or malfunction of parts. The rotor blades should also be checked for proper track and balance.

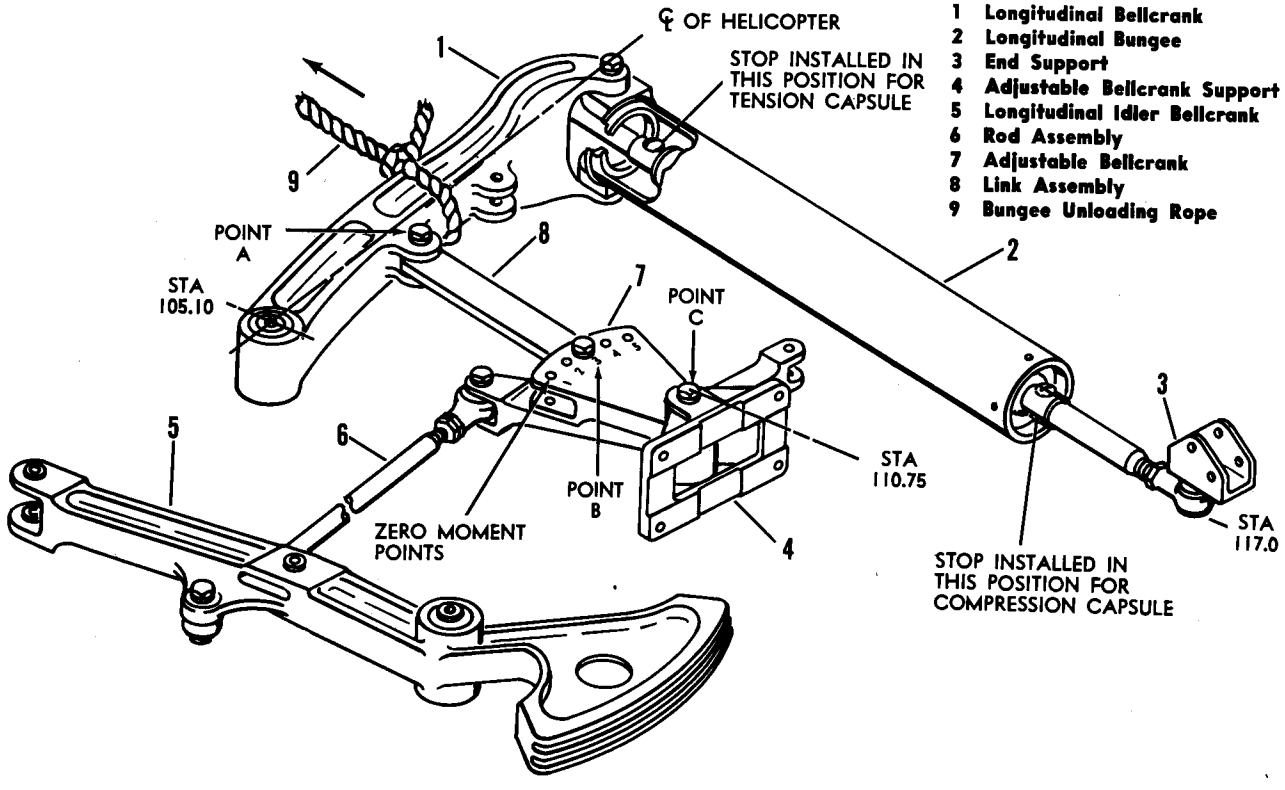

Figure 2-28A. Longitudinal Bungee Adjustment (Sheet 1 of 3)

SHORT LINK ADJUSTMENTS

Forces in Stick[a]		If Link is Mounted in Hole	And Type Bungee Capsule is	Adjust Link to Hole	And Use Bungee Capsule
@ 3-1/2 in. fwd (pounds)[b]	@ 1-1/2 in. aft (pounds)[c]				
4-10F	6-14F	5	Tension	4	Tension
10-18F	14-23F	5	Tension	3	Tension
18-28F	23-31F	5	Tension	2	Tension
28 or more F	31 or more F	5	Tension	1	Tension
3-11F	4-13F	4	Tension	3	Tension
11-21F	13-21F	4	Tension	2	Tension
21 or more F	21 or more F	4	Tension	1	Tension
4-14F	4-12F	3	Tension	2	Tension
14 or more F	12 or more F	3	Tension	1	Tension
5 or more F	5 or more F	2	Tension	1	Tension
5-15A	4-12A	1	Tension	2	Tension
15-23A	12-20A	1	Tension	3	Tension
23-29A	20-30A	1	Tension	4	Tension
29 or more A	30 or more A	1	Tension	5	Tension
5-13A	4-8A	2	Tension	3	Tension
13-19A	8-18A	2	Tension	4	Tension
19 or more A	18 or more A	2	Tension	5	Tension
4-10A	4-14A	3	Tension	4	Tension
10 or more A	14 or more A	3	Tension	5	Tension
4 or more A	5 or more A	4	Tension	5	Tension
5-15A	4-12A	5	Compression	4	Compression
15-24A	12-20A	5	Compression	3	Compression
24-32A	20-28A	5	Compression	2	Compression
32 or more A	28 or more A	5	Compression	1	Compression
5-14A	5-13A	4	Compression	3	Compression
14-22A	13-21A	4	Compression	2	Compression
22 or more A	21 or more A	4	Compression	1	Compression
4-12A	4-13A	3	Compression	2	Compression
12 or more A	13 or more A	3	Compression	1	Compression
4 or more A	4 or more A	2	Compression	1	Compression
3-11F	3-11F	1	Compression	2	Compression
11-20F	11-19F	1	Compression	3	Compression
20-30F	19-27F	1	Compression	4	Compression
30 or more F	27 or more F	1	Compression	5	Compression
5-14F	4-12F	2	Compression	3	Compression
14-24F	12-20F	2	Compression	4	Compression
24 or more F	20 or more F	2	Compression	5	Compression
5-15F	4-12F	3	Compression	4	Compression
15 or more F	12 or more F	3	Compression	5	Compression
5 or more F	4 or more F	4	Compression	5	Compression
11-17F	2 or more A	5	Tension	1	Compression
17-25F	2-8F	5	Tension	2	Compression
25-33F	8-16F	5	Tension	3	Compression
33-41F	16-24F	5	Tension	4	Compression
41 or more F	24 or more F	5	Tension	5	Compression
5-11F	10 or more A	4	Tension	1	Compression
11-19F	4-10A	4	Tension	2	Compression
19-27F	1-6F	4	Tension	3	Compression
27-37F	6-14F	4	Tension	4	Compression
37 or more F	14 or more F	4	Tension	5	Compression
1-3F	20 or more A	3	Tension	1	Compression

Figure 2-28A. Longitudinal Bungee Adjustment (Sheet 2 of 3)

SHORT LINK ADJUSTMENTS (cont)

Forces in Stick[a]		If Link is Mounted in Hole	And Type Bungee Capsule is	Adjust Link to Hole	And Use Bungee Capsule
@ 3-1/2 in. fwd (pounds)[b]	@ 1-1/2 in. aft (pounds)[c]				
3-11F	12-20A	3	Tension	2	Compression
11-19F	2-12A	3	Tension	3	Compression
19-27F	1-3A	3	Tension	4	Compression
27 or more F	3 or more F	3	Tension	5	Compression
6 or more A	28 or more A	2	Tension	1	Compression
2-6A	20-28A	2	Tension	2	Compression
3-11F	12-20A	2	Tension	3	Compression
11-21F	4-12A	2	Tension	4	Compression
21 or more F	1-4A	2	Tension	5	Compression
16 or more A	35 or more A	1	Tension	1	Compression
8-16A	26-35A	1	Tension	2	Compression
2-8A	18-26A	1	Tension	3	Compression
4-11F	11-18A	1	Tension	4	Compression
13-21A	5 or more F	5	Compression	1	Tension
21-31A	1-4A	5	Compression	2	Tension
31-39A	4-12A	5	Compression	3	Tension
39-45A	12-22A	5	Compression	4	Tension
45 or more A	22 or more A	5	Compression	5	Tension
3-11A	11 or more F	4	Compression	1	Tension
11-21A	3-11F	4	Compression	2	Tension
21-29A	1-5A	4	Compression	3	Tension
29-35A	5-13A	4	Compression	4	Tension
35 or more A	13 or more A	4	Compression	5	Tension
2-7F	19 or more F	3	Compression	1	Tension
3-10A	11-19F	3	Compression	2	Tension
10-18A	1-11F	3	Compression	3	Tension
18-24A	1-6A	3	Compression	4	Tension
24 or more A	6 or more A	3	Compression	5	Tension
7-15F	28 or more F	2	Compression	1	Tension
1-7F	20-28F	2	Compression	2	Tension
3-11A	11-20F	2	Compression	3	Tension
11-17A	2-11F	2	Compression	4	Tension
17 or more A	4 or more A	2	Compression	5	Tension
14-22F	35 or more F	1	Compression	1	Tension
2-14F	27-35F	1	Compression	2	Tension
0-4A	18-27F	1	Compression	3	Tension
4-10A	9-18F	1	Compression	4	Tension
10 or more A	2-9F	1	Compression	5	Tension

[a] Forces pushing against loadmeter at the center of the cyclic stick grip. F force tends to pull stick forward; A force tends to pull stick aft.

[b] Position of cyclic stick forward of its center of travel measured at the thumb switch. With stick 3-1/2 inches forward of center of travel, the helicopter is in cruising flight at approximately 80 knots.

[c] Position of cyclic stick aft of its center of travel measured at the thumb switch. With stick 1-1/2 inches aft of center of travel, the helicopter is in hovering flight.

Figure 2-28A. Longitudinal Bungee Adjustment (Sheet 3 of 3)

2-146. RIGGING CENTERING SPRINGS.

2-147. LONGITUDINAL CENTERING SPRING. Rig the longitudinal centering spring as follows:

a. Lock out the lower differential controls.

b. Disconnect the centering spring at the magnetic brake.

c. Release the magnetic brake by pressing the button on the cyclic stick. Set the crank parallel to the nearest station frame. The crank should point down.

d. Adjust the length of the rod assembly so that the centering spring may be installed without compressing or extending the spring.

2-148. LATERAL CENTERING SPRING. Rig the lateral centering spring in the same manner as outlined for the longitudinal spring. Set the crank on the magnetic brake parallel to the nearest station frame.

2-149. DIRECTIONAL CENTERING SPRING. Rig the directional centering spring in the same manner as outlined for the longitudinal spring. Set the crank on the magnetic brake 90 degrees to the forward face of the console.

TABLE 2-1B
FLIGHT CONTROL CABLES COLOR CODE

	Fwd Left-Hand	Fwd Right-Hand	Aft Left-Hand	Aft Right-Hand
LATERAL	1 Red	1 Blue	2 Red	2 Blue
LONGITUDINAL	1 Green	1 White	2 Green	2 White
COLLECTIVE	1 Black	1 Yellow	2 Black	2 Yellow

TABLE 2-2
RIGGING TENSIONS—FORWARD FLIGHT CONTROL CABLES

ANTICIPATED OPERATING TEMPERATURE (°F)

RIGGING TEMPERATURE (°F)	—65	—55	—45	—35	—25	—15	—5	5	15	25	35	45	55	65	75	85	95	105	115	125	135
—65	70	63	56	50	50	50	50	50	50												
—55	77	70	63	56	50	50	50	50	50	50											
—45	84	77	70	63	56	50	50	50	50	50	50				TENSION CABLES WITHIN ±5 POUNDS						
—35	91	84	77	70	63	56	50	50	50	50	50	50									
—25	98	91	84	77	70	63	56	50	50	50	50	50	50								
—15	105	98	91	84	77	70	63	56	50	50	50	50	50	50							
— 5	112	105	98	91	84	77	70	63	56	50	50	50	50	50	50						
5	119	112	105	98	91	84	77	70	63	56	50	50	50	50	50	50					
15	126	119	112	105	98	91	84	77	70	63	56	50	50	50	50	50	50				
25	133	126	119	112	105	98	91	84	77	70	63	56	50	50	50	50	50	50			
35	140	133	126	119	112	105	98	91	84	77	70	63	56	50	50	50	50	50	50		
45	147	140	133	126	119	112	105	98	91	84	77	70	63	56	50	50	50	50	50	50	
55	154	147	140	133	126	119	112	105	98	91	84	77	70	63	56	50	50	50	50	50	50
65	154	154	147	140	133	126	119	112	105	98	91	84	77	70	63	56	50	50	50	50	50
75	154	154	154	147	140	133	126	119	112	105	98	91	84	77	70	63	56	50	50	50	50
85	154	154	154	154	147	140	133	126	119	112	105	98	91	84	77	70	63	56	50	50	50
95	154	154	154	154	154	147	140	133	126	119	112	105	98	91	84	77	70	63	56	50	50
105						154	147	140	133	126	119	112	105	98	91	84	77	70	63	56	50
115							154	147	140	133	126	119	112	105	98	91	84	77	70	63	56
125								154	147	140	133	126	119	112	105	98	91	84	77	70	63
135									154	147	140	133	126	119	112	105	98	91	84	77	70

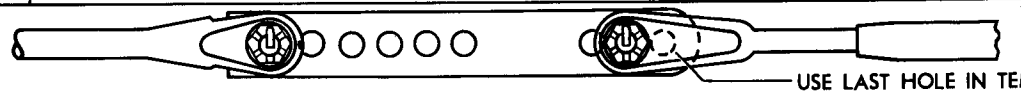

USE LAST HOLE IN TEMPERATURE COMPENSATION LINK FOR ALL TEMPERATURES

2-150. RIGGING CONTROL CABLES.

2-151. FORWARD CONTROL CABLES. Install the forward flight control cables using figure 2-7 and table 2-1 as a guide to identify cables and their routing. Tension cables to preloads given in table 2-2.

Note

Shake cables to distribute friction before taking tension readings.

2-152. AFT CONTROL CABLES. Install the aft flight control cables using figure 2-7 and table 2-1 as a guide to identify cables and their routing. Tension cables to preloads given in table 2-3. See table 2-3 and figure 2-7 for correct installation of cable temperature compensation links. Quick disconnect units have been incorporated in the aft control cable system of the H-21B and H-21C helicopters. These disconnects eliminate the necessity of rerigging the control system after initial rigging and tensioning.

Note

The cable rigging tension table must be used when rigging control cables whenever differences between rigging temperature and operating temperature exist. Unless the cables are properly tensioned, differences in temperature will cause unequal expansion or contraction between the steel cables and dural fuselage. This will create undesirable forces in the control system.

2-153. SETTING LIMIT STOPS.

Note

Rigging pins must be removed and bungees disconnected to check control movements.

2-154. LONGITUDINAL STICK. (See figure 2-29.) Adjust and safety the stop bolts (1) in the stop arms of the cyclic stick horn assembly to give 7.02 inches forward stick motion and 6.82 inches aft stick motion. Take longitudinal meas-

TABLE 2-3
RIGGING TENSIONS—AFT FLIGHT CONTROL CABLES

RIGGING TEMPERATURE (°F) \ ANTICIPATED OPERATING TEMPERATURE (°F)	—65	—55	—45	—35	—25	—15	—5	5	15	25	35	45	55	65	75	85	95	105	115	125	135
—65	100	93	86	79	72	65	60	60	60												
—55	107	100	93	86	79	72	65	60	60	60					TENSION CABLES WITHIN ±5 POUNDS						
—45	114	107	100	93	86	79	72	65	60	60	60										
—35	121	114	107	100	93	86	79	72	65	60	60	60									
—25	128	121	114	107	100	93	86	79	72	65	60	60	60								
—15	135	128	121	114	107	100	93	86	79	72	65	60	60	60							
— 5	142	135	128	121	114	107	100	93	86	79	72	65	60	60	60						
5	149	142	135	128	121	114	107	100	93	86	79	72	65	60	60	60					
15	156	149	142	135	128	121	114	107	100	93	86	79	72	65	60	60	60				
25	163	156	149	142	135	128	121	114	107	100	93	86	79	72	65	60	60	60			
35	170	163	156	149	142	135	128	121	114	107	100	93	86	79	72	65	60	60	60		
45	177	170	163	156	149	142	135	128	121	114	107	100	93	86	79	72	65	60	60	60	
55	180	177	170	163	156	149	142	135	128	121	114	107	100	93	86	79	72	65	60	60	60
65	180	180	177	170	163	156	149	142	135	128	121	114	107	100	93	86	79	72	65	60	60
75	180	180	180	177	170	163	156	149	142	135	128	12'	114	107	100	93	86	79	72	65	60
85	180	180	180	180	177	170	163	156	149	142	135	128	121	114	107	100	93	86	79	72	65
95	180	180	180	180	180	177	170	163	156	149	142	135	128	121	114	107	100	93	86	79	72
105	180	180	180	180	180	180	177	170	163	156	149	142	135	128	121	114	107	100	93	86	79
115								177	170	163	156	149	142	135	128	121	114	107	100	93	86
125									177	170	163	156	149	142	135	128	121	114	107	100	93
135										177	170	163	156	149	142	135	128	121	114	107	100
	USE INSIDE HOLE IN TEMPERATURE COMPENSATION LINK										USE CENTER HOLE IN TEMPERATURE COMPENSATION LINK									USE OUTSIDE HOLE IN TEMP COMPENSATION LINK	

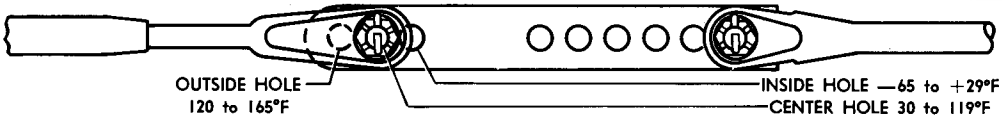

urements at the centerline of the joint between the cyclic stick tube and the elbow below the cyclic stick grip.

2-155. LATERAL STICK. (See figure 2-29.) Adjust the stop bolts (2) on the cyclic stick's socket assemblies to give 4.88 inches of lateral stick travel in each direction from neutral. Take lateral measurements on the aft side of the cyclic stick at the centerline of the joint between the cyclic stick tube and the elbow below the cyclic stick grip.

2-156. DIRECTIONAL PEDALS. (See figure 2-29.) Adjust the bolts (3) in the directional pedals stop assemblies to give 3.25 ±0.06 inches of movement in each direction from the neutral position.

2-157. TRIM STOPS. If the trim system is properly rigged, no further adjustments are necessary since the unit contains built-in limit stops. However, the trim control can be checked against swash plate travel as follows:

a. With the trim full nose down, the forward swash plate should lower 0.16 ±0.03 inch and the aft swash plate should raise 0.16 ±0.03 inch.

b. With the trim full nose up, the forward swash plate should raise 0.16 ±0.03 inch and the aft swash plate should lower 0.16 ±0.03 inch.

2-158. COLLECTIVE PITCH LEVER. (See figure 2-29.) Set the collective pitch lever stops as follows:

a. Insert the rigging pin in the lower differential controls.

b. Check the rig position of the collective pitch lever. The center of the throttle twist grip should be 16-5/32 (16.15) inches above the cockpit floor. When in this position, the lever should make an angle of 46° 49′ ±30″ to the vertical station.

Note

The vertical station is perpendicular to the cockpit floor at the collective pitch lever.

c. Remove rigging pin and raise the lever until the center of the throttle twist grip is 18-3/4 (18.75) inches above the cockpit floor. When in this position, the lever should make an angle of 35° 30′ ±30″ to the vertical station.

d. Engage the down lock mechanism in the open position to assure full collective pitch travel.

e. Lower the lever until it is inclined at 64° 18′ to the vertical station.

f. Adjust the lower limit stop (5) to give this angular motion by sliding the down lock latch back until the set screw which safeties the stop is centered in the hole provided in the latch. Loosen the set screw, rotate the stop as many turns as necessary, and retighten. Stake the set screw in place. Release the latch.

2-159. CONTROL MOTION CHECK.

2-160. COLLECTIVE PITCH. (See figure 2-29.) Check the collective pitch control for the following motions:

a. Lever travel from rig (neutral) position, measured at the center of the throttle twist grip is 2-39/64 (2.60) inches up and 5-21/32 (5.62) inches down. Corresponding angular travel of the lever is 11° 19′ up and 17° 29′ down.

b. Corresponding trunnion block travel; 0.92 ±0.03 inch up and 1.36 ±0.03 inches down.

2-161. LONGITUDINAL. (See figure 2-29.) Check the longitudinal controls for the following motions:

a. Cyclic stick travel from rig (neutral) position; 7.02 ±0.06 inches forward.

b. Corresponding bellcrank motion; 1.47 inches down for forward bellcrank and 1.47 inches up for aft bellcrank.

c. Cyclic stick travel from rig (neutral) position; 6.82 ±0.06 inches aft.

d. Corresponding bellcrank motion; 1.47 inches up for forward bellcrank and 1.47 inches down for aft bellcrank.

2-162. LATERAL. (See figure 2-29.) Check the lateral controls for the following motions:

a. Cyclic stick travel from rig (neutral) position; 4.88 ±0.06 inches right.

b. Corresponding bellcrank motion for both bellcranks; 0.49 inch up.

c. Cyclic stick travel from rig (neutral) position; 4.88 ±0.06 inches left.

d. Corresponding bellcrank motion for both bellcranks; 0.49 inch down.

2-163. DIRECTIONAL. (See figure 2-29.) Check the directional controls for the following motions:

a. Right pedal travel from rig (neutral) position; 3.25 ±0.06 inches forward.

b. Corresponding bellcrank motion; 0.49 inch up on the forward bellcrank and 0.49 inch down on the aft bellcrank.

c. Left pedal travel from rig (neutral) position; 3.25 ±0.06 inches forward.

d. Corresponding bellcrank motion; 0.49 inch down on the forward bellcrank and 0.49 inch up on the aft bellcrank.

2-164. STICK POSITIONER. The stick positioner motion check is outlined under Rigging Stick Positioner in this section.

2-165. CONTROL INTERFERENCE CHECK.

2-166. DESCRIPTION. Check for any interference throughout the control system by moving the cockpit controls to the following positions:

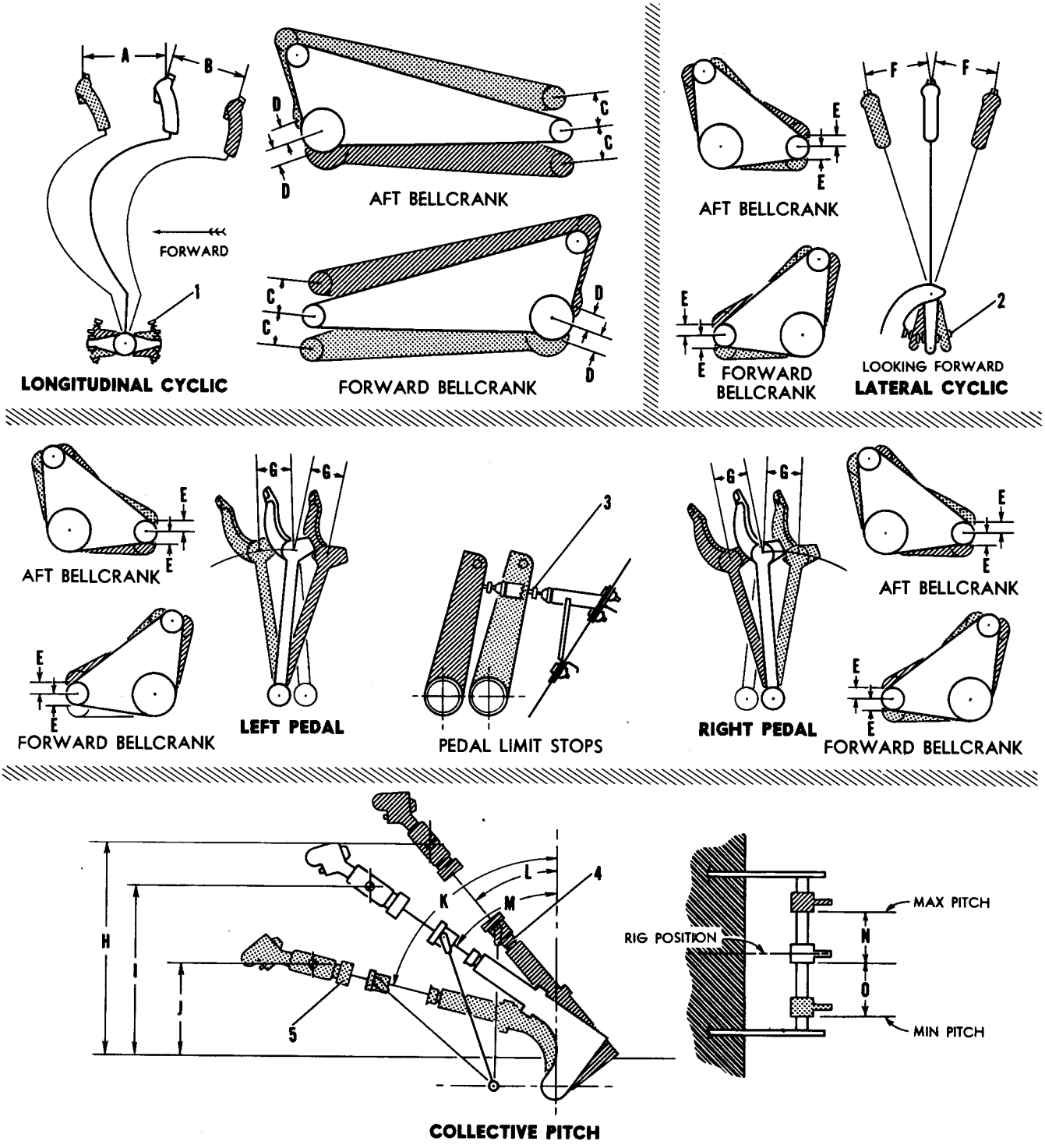

1	Longitudinal Cyclic Limit Stop	B	6.82 inches	I	16.15 inches
2	Lateral Cyclic Limit Stop	C	1.47 inches	J	10.50 inches
3	Directional Pedal Stop	D	0.42 inch	K	64° 18'
4	Collective Pitch Up Limit Stop	E	0.49 inch	L	35° 30'
5	Collective Pitch Down Limit Stop	F	4.88 inches	M	46° 49'
A	7.02 inches	G	3.25 inches	N	0.92 inch
		H	18.75 inches	O	1.36 inches

Figure 2-29. Control Motion and Limit Stops

Collective Pitch Full Up and Stick Positioner Nose Up.
FULL LEFT PEDAL AND STICK TO EACH CORNER.
FULL RIGHT PEDAL AND STICK TO EACH CORNER.

Collective Pitch Full Up and Stick Positioner Nose Down.
FULL LEFT PEDAL AND STICK TO EACH CORNER.
FULL RIGHT PEDAL AND STICK TO EACH CORNER.

Collective Pitch Full Down and Stick Positioner Nose Up.
FULL LEFT PEDAL AND STICK TO EACH CORNER.
FULL RIGHT PEDAL AND STICK TO EACH CORNER.

Collective Pitch Full Down and Stick Positioner Nose Down.
FULL LEFT PEDAL AND STICK TO EACH CORNER.
FULL RIGHT PEDAL AND STICK TO EACH CORNER.

Collective Pitch in Rig Position and Stick Positioner Nose Up.
FULL LEFT PEDAL AND STICK TO EACH CORNER.
FULL RIGHT PEDAL AND STICK TO EACH CORNER.

Collective Pitch in Rig Position and Stick Positioner Nose Down.
FULL LEFT PEDAL AND STICK TO EACH CORNER.
FULL RIGHT PEDAL AND STICK TO EACH CORNER.

Note

On the H-21B helicopter, move the cyclic stick and directional pedals to their extreme positions to check for interference with the servo control cables.

2-166A. COLD WEATHER INTERFERENCE CHECK. If binding of the controls occurs during extreme cold weather, check the control rods and cables for excessive anti-corrosive mixture, grease, and dirt at the fairleads and pulleys. It is recommended that all sections of cables passing through pulleys and fairleads be kept clean at all times during cold weather operations as excessive anti-corrosive mixture and grease, mixed with dirt, will tend to collect at these points.

2-167. CONTROL CLEARANCE CHECK.

2-168. DESCRIPTION. Reconnect all bungees and check for correct clearances throughout the entire control system with rotor blades attached and hanging on the droop stops. Check clearances for all control motions listed under Control Interference Check in this section. Check for hose, fittings, and equipment clearance with hydraulic system in operation.

Note

Keep a close watch for intermediate conditions as well as extreme control movements listed.

Minimum clearances are as follows:

a. Rod ends in clevis fittings must have free motion at all times.

b. Units mounted on a common shaft must have 0.03-inch minimum clearance between moving parts.

2-169. GROUND AND FLIGHT CHECK PROCEDURE. The ground and flight check procedure listed on the following pages should be accomplished after any maintenance affecting the hydraulic flight controls or flight control system has been performed.

Note

Those sections of the ground and flight check procedure requiring flight of the helicopter should be performed only by qualified pilot personnel.

2-170. RIGGING AUTO-PILOT CONTROLS. **H-21B**

Note

Operation of the auto-pilot system in the H-21B helicopter is prohibited at the present time. The cable assemblies of the system have been disconnected and removed from the helicopters and will be supplied as loose fly-away equipment. All remaining components of the auto-pilot system will remain installed in the helicopter.

a. Before rigging the auto-pilot controls, the flight controls must be rigged and tensioned properly. (See figure 2-30.) Disengage the auto-pilot by pressing the auto-pilot disengage button on the cyclic stick.

2-171. RIGGING AUTO-PILOT CABLES. **H-21B**

a. Lock out the lower differential controls as outlined in paragraph 2-136, Lower Differential Controls. This locked out position is the mid-travel position for the longitudinal, directional and lateral controls.

b. Install the directional servo cable assemblies.

c. Tighten the turnbuckle to preload the cable to the correct tension given in table 2-4.

d. Set the cable guard studs, located around the drum of the servo motor, so that they are equally spaced and do not interfere with the cable movement. Cable guard studs should be located within 15 degrees of each cable tangent point. The maximum allowable distance between studs is 60 degrees.

e. Install the longitudinal servo cable assemblies and proceed as outlined in steps c. and d.

f. Install the lateral servo cable assemblies and proceed as outlined in steps c. and d.

g. Remove the rigging pin from the lower differential controls.

2-172. SERVO MOTOR ADJUSTMENTS. (See figure 2-31.) In order to prevent the flight con-

GROUND AND FLIGHT CHECK PROCEDURE

To Be Performed After Maintenance Affecting Flight Controls or Hydraulic System Has Been Accomplished.

CHECK	RESULTS			
	Desired	**Acceptable**	**Unacceptable**	**Corrective Action**
ON GROUND—ENGINE OFF				
CONTROLS				
a. Displace pedals, cyclic stick and collective pitch lever to full travel	Free and full movement	Free and full movement	Controls do not move freely	Check control system (rigging pins and pitch locks removed)
LONGITUDINAL STICK POSITIONER WHEEL AND INDICATOR (on console)				
a. Check for full travel	Full travel	Full travel	Less than full travel	Check rigging of stick positioner
ON GROUND—ROTORS OPERATING				
HYDRAULIC CONTROLS				
a. Hydraulic pressure	1000	900–1100	Pressure low or high	Check system for leaks and oil level. Check relief valve
b. Centering spring	Retains cyclic stick 3-7/8 in. right and left of neutral 4-1/4 in. fore and aft of neutral	Retains cyclic stick 3-7/8 in. right and left of neutral 4-1/4 in. fore and aft of neutral	Stick will not stay in displaced positions	Check centering spring system
	Holds pedals 4 in. apart	Holds pedals 4 in. apart	Pedals will not stay in displaced position	
CONTROL RESPONSE Check at 2500 rpm and flat pitch (Checked by pilot or an observer outside of helicopter)				
a. Right, left, fore and aft cyclic b. Right and left pedal c. Increase collective pitch	Rotor tilt must correspond to control motion	Rotor tilt must correspond to control motion	Rotor tilt does not correspond to control motion	Check rigging—especially cable routing
CLUTCH	Friction clutch noises can be expected during rotor engagement and do not require corrective action.			
a. Time to synchronize friction clutch	8–15 seconds (starting at 1100–1200 engine rpm)	8 seconds minimum; 15 seconds maximum	Too rapid engagement or too slow engagement	Check clutch friction setting or adjust friction clutch
b. Jaw clutch engagement	2–5 seconds	5 seconds maximum	Clutch does not go into jaw. Amber engaging light remains on	Check action of clutch through operating range. Check light system
HOVERING FLIGHT	This check should be made with a gross weight of approximately 10,650 pounds and a 10-inch forward center of gravity. Check control positions with hydraulic control system turned on. Check control forces with hydraulic control system turned off			
FLIGHT CONTROL POSITIONS				
a. Cyclic control—lateral (hovering up-wind)	Neutral	Neutral to 1/2 in. left or right	Greater stick positioner wheel movement required to position stick	Check rigging of flight controls
b. Cyclic control—longitudinal (hovering cross-wind with longitudinal stick position indicator on floor adjacent to console at HOVER)	Stick positioner indicator on console is at ZERO	1/2 in. nose-up or nose-down on stick positioner indicator on console		

CHECK	RESULTS			
	Desired	Acceptable	Unacceptable	Corrective Action
FLIGHT CONTROL POSITIONS (continued)				
c. Directional control (hovering up-wind)	Pedals aligned at "neutral"	Either pedal 1/2 inch aft of neutral	Greater displacement	Check pedal adjustment. Check control rigging
d. Longitudinal stick positioner	Cyclic stick moves forward with nose-up wheel movement and aft with nose-down wheel movement	Cyclic stick moves forward with nose-up wheel movement and aft with nose-down wheel movement	Cyclic moves in wrong direction. Wheel will not position cyclic stick in HOVER on stick position indicator on floor	Check stick positioner rigging. Check center of gravity
	Note The above checks are to be performed only by qualified pilot personnel			
HOVERING FLIGHT				
FLIGHT CONTROL FORCES				
a. Lateral	0–8	8	Excessive forces	Check cable tensions vs outside temperature
b. Longitudinal	0–8	8	Excessive forces	Check cable routing. Check fairleads and pulleys for excessive cable rubbing friction
c. Collective pitch	0–5	15	Over 15 pounds	
d. Directional	0–15	15	Excessive forces	
VIBRATION (0 to 5 knots wind)	No 1/rev No 3/rev	Light 1/rev Light 3/rev	Moderate 1/rev Moderate 3/rev	Clean blades. Check blade track. For 1/rev, if track satisfactory, check dampers
	Note The above checks are to be performed only by qualified pilot personnel			
CLIMB	Control forces must be safe for controllability			
CRUISING FLIGHT Stick positioner — at zero IAS, 80 knots	Check control positions with hydraulic control system turned on Check control forces with hydraulic control system turned off These are forces required of the pilot to displace the controls Control forces only should be present. Feed back loads of 5 pounds only acceptable			
CONTROL FORCES				
a. Lateral cyclic control				
Position	Neutral	Neutral to 1/2 inch right or left	Opposite displacement	Check control rigging
Force	1–8	8	Excessive forces	Same as for hovering
b. Longitudinal cyclic control				
Position	80 knots position on longitudinal control indicator with stick positioner indicator at ZERO	1/2 in. nose-up or nose-down stick positioner wheel movement to set indicator on at 80 knot marking	Requires greater wheel movement to position properly	Check rotor blade incidence and control rigging
Force	1–8 pounds	8 pounds	Excessive forces	Same as for hovering

CHECK	RESULTS			
	Desired	Acceptable	Unacceptable	Corrective Action
CONTROL FORCES (continued) c. Directional control	Right pedal forward of left pedal 1 inch	Right pedal forward of left pedal 0 to 2 inches	Greater differential	Check rigging
Force (Check at 80 knots IAS)	A steady unbalance force is normally present in the directional control pedals. At this cruising airspeed, application of a maximum of 70 pounds on the right pedal, with the hydraulic system turned off, may be required, but pressure is usually considerably less.			Check rigging
d. Collective pitch control Force	Must be safe for controllability			
	Note The above checks are to be performed only by qualified pilot personnel			
VIBRATION	No 1/rev No 3/rev	Moderate 1/rev and/ or Moderate 3/rev	Excessive vibration	
AUTOROTATION (55 knots IAS) Rotor rpm in steady flight (Full low collective pitch may be used to attain desired rotor rpm; however, increase pitch to prevent higher rpm)	270–300	250–300	Rotor rpm too low*	Check incidence of rotor blades and control rigging at minimum collective pitch position
	*The values quoted are the normal operating speeds. The maximum overspeed rpm for the rotor is 350. In most cases this rpm can be obtained and even exceeded with the collective pitch lever full down. Therefore, the speed will be controlled by the pilot adjusting the collective pitch lever.			
CONTROL FORCES 80 knots autorotation	Must be safe for controllability			
	Note The above checks are to be performed only by qualified pilot personnel.			

Paragraph 2-172 continued here.

trols from hitting the mechanical stops while the auto-pilot is engaged, the servo motors may be adjusted to limit the maximum travel of the servo cables.

a. Remove the aft cover of the directional servo motor. Hold the servo cable drum so that it cannot turn, then loosen the nut (5).

b. With the controls in neutral position, rotate the potentiometer wiper (1) until an ohmmeter shows equal resistance between pins "E" to "G"

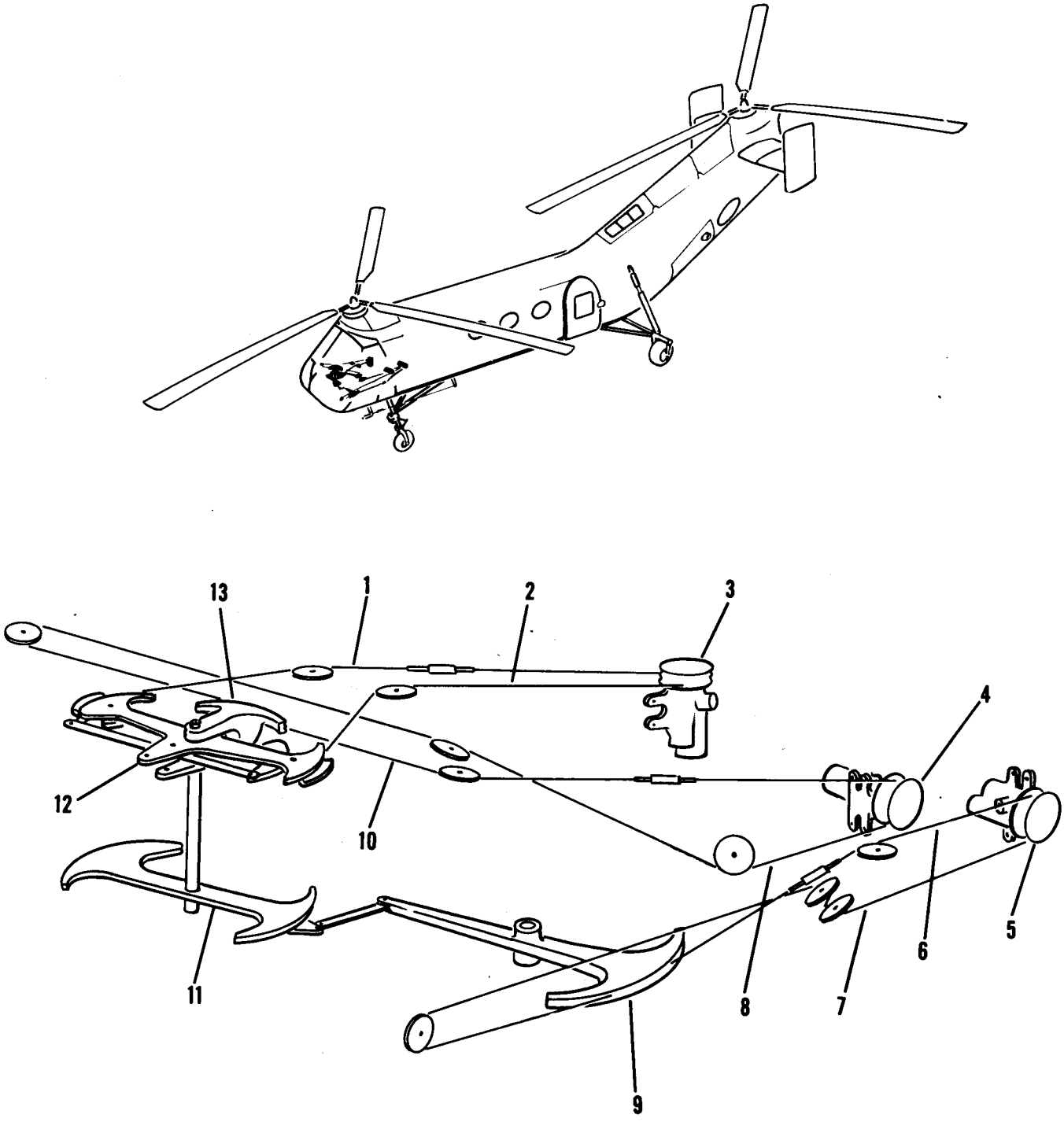

1 Lateral Control Cable
2 Lateral Control Cable
3 Lateral Servo Motor
4 Directional Servo Motor
5 Longitudinal Servo Motor
6 Longitudinal Control Cable
7 Longitudinal Control Cable
8 Directional Control Cable
9 Longitudinal Bellcrank
10 Directional Control Cable
11 Longitudinal Control Quadrant
12 Lateral Control Quadrant
13 Directional Control Quadrant

Figure 2-30. Auto-Pilot Control System

and "F" to "G" of the servo motor receptacle. This will center the potentiometer wiper on the potentiometer winding (2). Do not move wiper during remaining adjustments.

c. Place a metal spacer having a thickness of 0.090 inch between the pedal control torque tube and the pedal control stop. Press the right pedal forward until the torque tube arm bears against the metal spacer. Secure the pedal in this position.

d. Rotate top cam (4) in a counter-clockwise direction until it trips the lower switch blade (3). The top cam is now adjusted.

e. Release the right pedal and place the spacer between the left pedal torque tube arm and its limit stop. Press the left pedal forward until the torque tube arm bears against the spacer and secure the pedal in this position.

f. Rotate the bottom cam (6) in a clockwise direction until it trips the upper switch blade (7). The bottom cam is now adjusted.

Note

When making any cam adjustments, be sure that the other cam does not move with respect to the center shaft.

g. Tighten the nut (5), being careful not to tighten it enough to override the drive detent.

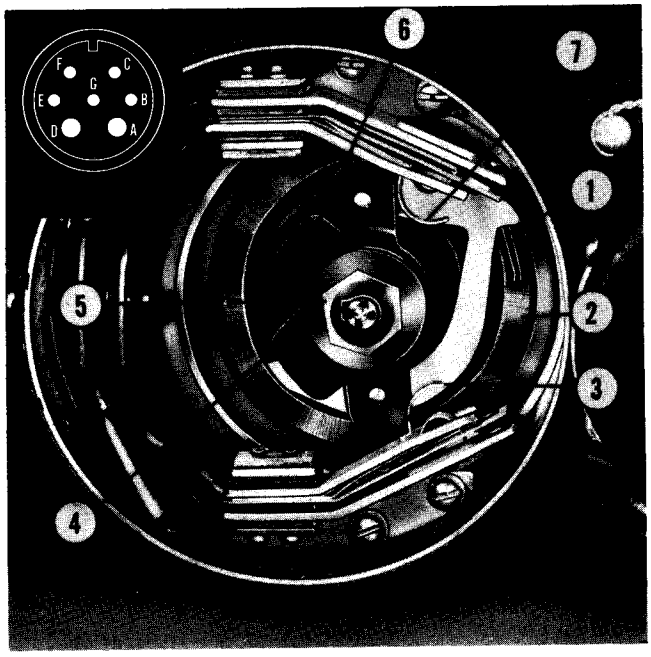

1 Potentiometer Wiper
2 Potentiometer Winding
3 Lower Switch Blade
4 Top Cam
5 Adjusting Nut
6 Bottom Cam
7 Upper Switch Blade

Figure 2-31. Servo Motor Travel Adjustment

TABLE 2-4
RIGGING TENSIONS—AUTO-PILOT CONTROL CABLES

RIGGING TEMPERATURE (°F)	ANTICIPATED OPERATING TEMPERATURE (°F)																					
	—65	—55	—45	—35	—25	—15	—5	5	15	25	35	45	55	65	75	85	95	105	115	125	135
—65	85	78	71	64	57	50	43	36													
—55	92	85	78	71	64	57	50	43	36					TENSION CABLES WITHIN ±5 POUNDS							
—45	99	92	85	7°	71	64	57	50	43	36											
—35	106	99	92	85	78	71	64	57	50	43	36										
—25	113	106	99	92	85	78	71	64	57	50	43	36									
—15	120	113	106	99	92	85	78	71	64	57	50	43	36								
— 5	120	120	113	106	99	92	85	78	71	64	57	50	43	36							
5	120	120	120	113	106	99	92	85	78	71	64	57	50	43	36						
15	120	120	120	120	113	106	99	92	85	78	71	64	57	50	43	36					
25		120	120	120	120	113	106	99	92	85	78	71	64	57	50	43	36				
35			120	120	120	120	113	106	99	92	85	78	71	64	57	50	43	36			
45				120	120	120	120	113	106	99	92	85	78	71	64	57	50	43	36		
55					120	120	120	120	113	106	99	92	85	78	71	64	57	50	43	36	
65						120	120	120	120	113	106	99	92	85	78	71	64	57	50	43	36
75							120	120	120	120	113	106	99	92	85	78	71	64	57	50	43
85								120	120	120	120	113	106	99	92	85	78	71	64	57	50
95									120	120	120	120	113	106	99	92	85	78	71	64	57
105										120	120	120	120	113	106	99	92	85	78	71	64
115											120	120	120	120	113	106	99	92	85	78	71
125												120	120	120	120	113	106	99	92	85	78
135													120	120	120	120	113	106	99	92	85

If the detent is overriden, continue turning the nut in a clockwise direction until the cam wiper assembly is in its proper detent position, then replace the cover and release the left pedal.

h. To adjust the drum travel of the longitudinal servo, first adjust the potentiometer wiper as outlined in steps a. and b. Place a spacer of 0.090 inch thickness between the rear stop assembly of the left-hand cyclic stick and the left-hand cyclic stick horn assembly. Move the cyclic stick forward until the horn assembly bears against the spacer and secure the stick in this position.

i. Adjust the top cam as outlined in step d. After adjusting the lower cam, release the cyclic stick. Remove the spacer and place it between the forward stop assembly and the left-hand cyclic stick horn assembly. Move the cyclic stick aft until the horn assembly bears against the spacer. Secure the stick in this position and proceed as outlined in steps f. and g. Release the cyclic stick.

j. Adjust the drum travel of the lateral servo after centering the potentiometer wiper as outlined in steps a. and b. Place a spacer 0.090-inch thick between the left-hand cyclic stick horn assembly and the left-hand cyclic stick socket. Move the cyclic stick to the left until the horn assembly bears against the spacer. Secure the cyclic stick in this position and adjust the lateral top cam as outlined in step d.

k. Release the cyclic stick and remove the spacer. Place the spacer between the right-hand cyclic stick horn assembly and the right-hand socket assembly. Move the cyclic stick to the right until the horn assembly bears against the spacer. Adjust the lateral servo motor as outlined in steps f. and g. Release the cyclic stick.

2-173. FUSELAGE.

2-174. GENERAL. The fuselage of the helicopter is a one-piece light alloy semi-monocoque structure, composed of an aluminum skin riveted to bulkheads, frames, and intercostals. The windows and nose enclosure are transparent plastic. The fuselage consists of the following compartments; 1) the cockpit, located in the nose section, with all flight and engine controls for the pilot and co-pilot; 2) the cabin which contains the heater, rescue hoist, electronic equipment, and provisions for seats or litters; 3) the fuel cell compartment; 4) the engine compartment; and 5) the tail section. On H-21B and H-21C helicopters, a shipping splice, located at station 359.800, provides a means of separating the helicopter into two sections for air transport. To aid maintenance personnel in accomplishing work in the cabin area, fuselage station numbers have been stenciled on the right side of the fuselage just above the floor level starting at station 159.5 and continuing to station 339.5.

2-175. CABIN AND RESCUE DOORS.

2-176. DESCRIPTION. (See figure 2-32.) The cabin door is located in the middle of the left side of the fuselage. The door used on the YH-21 and H-21A helicopters is oval at the top and flat on the bottom. The cabin door of the H-21B and H-21C helicopters is rectangular in shape. The rescue door for all H-21 helicopters is oval-shaped and is located just behind the cockpit enclosure on the right side of the helicopter. The doors are attached to reinforced slotted tubular tracks by roller assemblies which permit easy opening and closing. Emergency exit panels of transparent plastic are installed in each door. These panels may be kicked out for quick exit or removed from outside the helicopter by pulling the tab (4) and removing the rubber packing from around the panel. A spring clip on each door stop will hold the door open.

Note

The spring clips should be tensioned so that it would take a force of 25–40 pounds to release the door.

Bulb seals are attached to the door and provide a tight seal between the fuselage and door when the door is closed. A jettison mechanism is provided for emergency removal of the door. To operate this mechanism, raise the jettison handle. This operates cam mechanisms at the upper and lower tracks which force the tracks forward and off their mounting pins, permitting the door and tracks to fall free of the helicopter.

2-177. REMOVAL. Remove the door assemblies from the track as follows:

a. Remove the stop blocks from the fuselage by removing the four attaching screws.

b. Slide the door forward until the rollers are clear of the tracks.

2-178. INSTALLATION. To install the door, reverse the removal procedure.

Note

The upper door track of the rescue door may come off due to the upper release yoke of the jettison mechanism slipping off the retaining pin. To prevent this, an extension of approximately 1/16 inch may be welded to the pin.

2-178A. RIGGING MAIN AND RESCUE DOOR RELEASE MECHANISMS. To prevent inadvertent jettisoning of the main door and rescue door due to vibration in flight and to eliminate lost motion in the release mechanism, the release

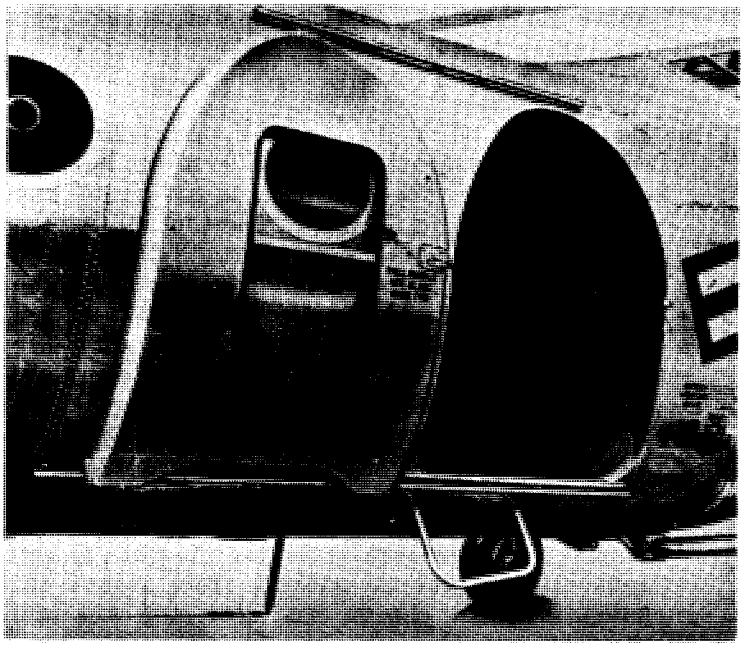

YH-21 & H-21A

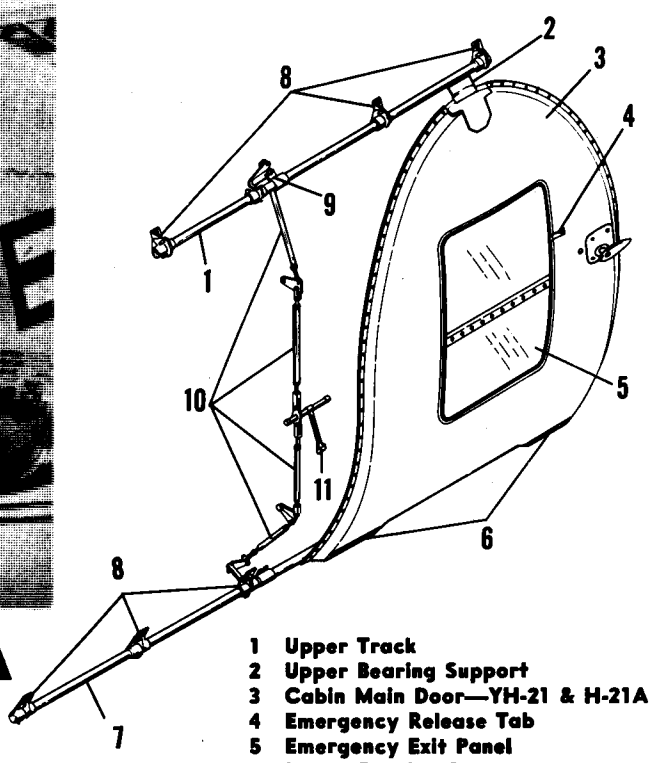

1 Upper Track
2 Upper Bearing Support
3 Cabin Main Door—YH-21 & H-21A
4 Emergency Release Tab
5 Emergency Exit Panel
6 Lower Bearing Supports
7 Lower Track
8 Track Supports
9 Jettison Cam
10 Rod Assemblies
11 Jettison Handle
12 Cabin Main Door—H-21B & H-21C

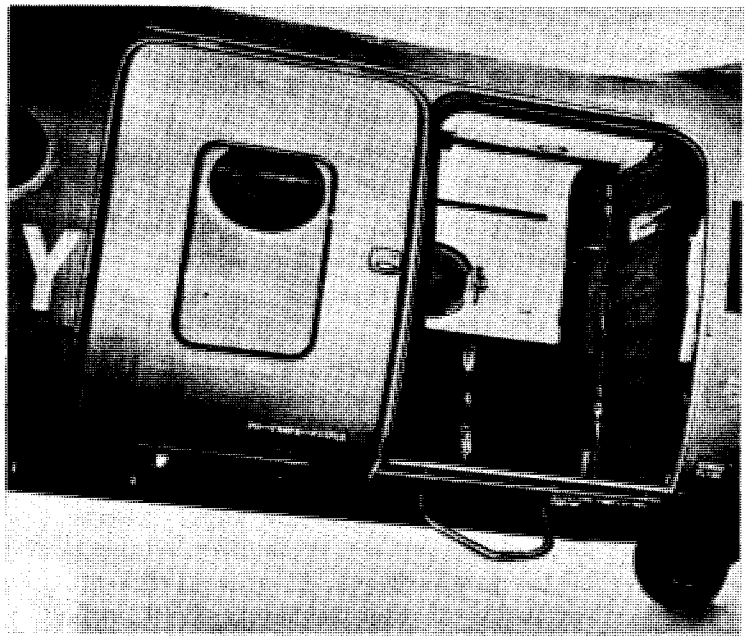

H-21B & H-21C

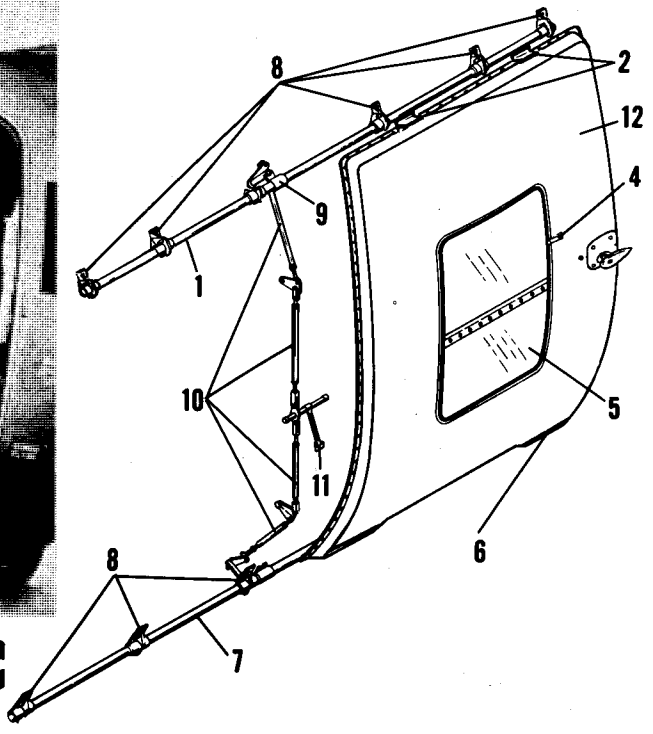

Figure 2-32. Cabin Door

mechanism system should be rigged in the following manner:

Note

Proper rigging of the release mechanism is accomplished by adjusting the length of the rod assemblies until a prescribed preload, measured by pulling the door track assembly with a standard fish scale, is obtained. So that the preload reading will be absolute, the friction load normally present when the tracks are installed must first be measured and accounted for. This must be done before any adjustments are made in the system.

a. After the door tracks have been installed, attach a length of thin gage wire to one end of the track. Attach a fish scale to this length of wire and pull the track in the direction of release. Measure and record the force required to start the track moving. This force, which is the friction load of the tracks, must be added to the prescribed preload.

b. Adjust the length of all release mechanism rod assemblies evenly such that at least one of the door track fittings and its retainer is in firm contact. A maximum gap of 0.0937 (3/32) inch should be maintained between the remaining door track fittings and their respective retainers. If this maximum gap is exceeded in any one location, the retainer should be removed from the fuselage and the bolt holes in the retainer should be slotted sufficiently to obtain the required gap.

c. With the jettison handle in the SECURE position, check to see that the centerline of the rod end attaching point at the handle is 0.26 $\pm$0.03 inch inboard of the vertical centerline of the pivot point of the handle. If the above dimension is exceeded, it is possible that, due to the mechanical advantage of the over-center arrangement, the upper rod of the release mechanism may bend in compression during operation.

d. Again attaching the fish scale to the door tracks, measure and record the force required to start the track moving. Adjust the release mechanism rod assemblies evenly until the force required to move the upper tracks is between 45 and 55 pounds and the force required to move the lower track is between 45 and 60 pounds. These forces are in addition to the friction load measured previously.

Note

When making any force measurements, the fish scale must be held parallel to the track to assure accuracy of readings.

e. After rigging the release mechanism, check operation of the system by jettisoning the doors at least twice. There should be a minimum disengagement of 0.125 (1/8) inch between the tips of the retainer studs and the track fittings when the release yoke is in the full released position.

2-178B. COLD WEATHER OPERATIONS. It is recommended that the door tracks and release mechanism be free of snow or ice accumulation and of any weakened solution of de-icing fluid which may freeze in flight.

2-179. ENGINE HATCH DOORS.

2-180. DESCRIPTION. (See figure 2-33.) There are two engine hatch doors (19 and 26) located aft of the main alighting gear on the lower sides of the fuselage. These doors, similar in size and shape, have circular cut-outs for engine exhaust stack clearance. Each door is attached to the fuselage by six clamps, three attaching to the fuselage and three to the removable keel.

2-181. REMOVAL. Remove the engine hatch doors as follows:

CAUTION

Do not start engine with the engine hatch doors removed since they are structural members and must be in place to help absorb the loads imposed on the fuselage when the engine is running.

a. Loosen the fastener on each clamp and pull out on the clamp handle.

b. Lower the door from the fuselage, being careful not to damage the engine exhaust system.

2-182. INSTALLATION. To install the structural doors, reverse the removal procedure.

2-183. ENGINE HATCH KEEL ASSEMBLY.

2-184. DESCRIPTION. (See figure 2-33.) The engine hatch keel assembly (13) is constructed of corrosion-resistant steel and aluminum alloy. The keel is located beneath the engine and is removable to permit installation of the engine. This keel, although removable, is a structural member and is considered a part of the lower keel of the helicopter.

2-185. REMOVAL. (See figure 2-33.)

CAUTION

Before removing the keel, support the aft end of the helicopter with a tail jack in order to relieve imposed loads on the fuselage structure which will develop when the keel is removed.

a. Remove the structural doors.

b. Break the two fuel line quick-disconnect fittings in the keel.

1 Adjustment Screw[14 28]
2 Pilot Block[14 28]
3 Internal Wrenching Nut[14 28]
4 Adjustment Screw Fitting[14 28]
5 Pip Pin[14 28]
6 Adjustment Screw Follower[14 28]
7 Follower Support[14 28]
8 Left Door Assembly
9 Right Door Assembly
10 Hinge Blade
11 Hinge Base
12 Right Hatch Door
13 Keel Assembly
14 Keel Bolt
15 Hatch Door Pin
16 Left Hatch Door
17 Hatch Clamp Handle
18 Hatch Clamp
19 Locking Rod Assembly[32]

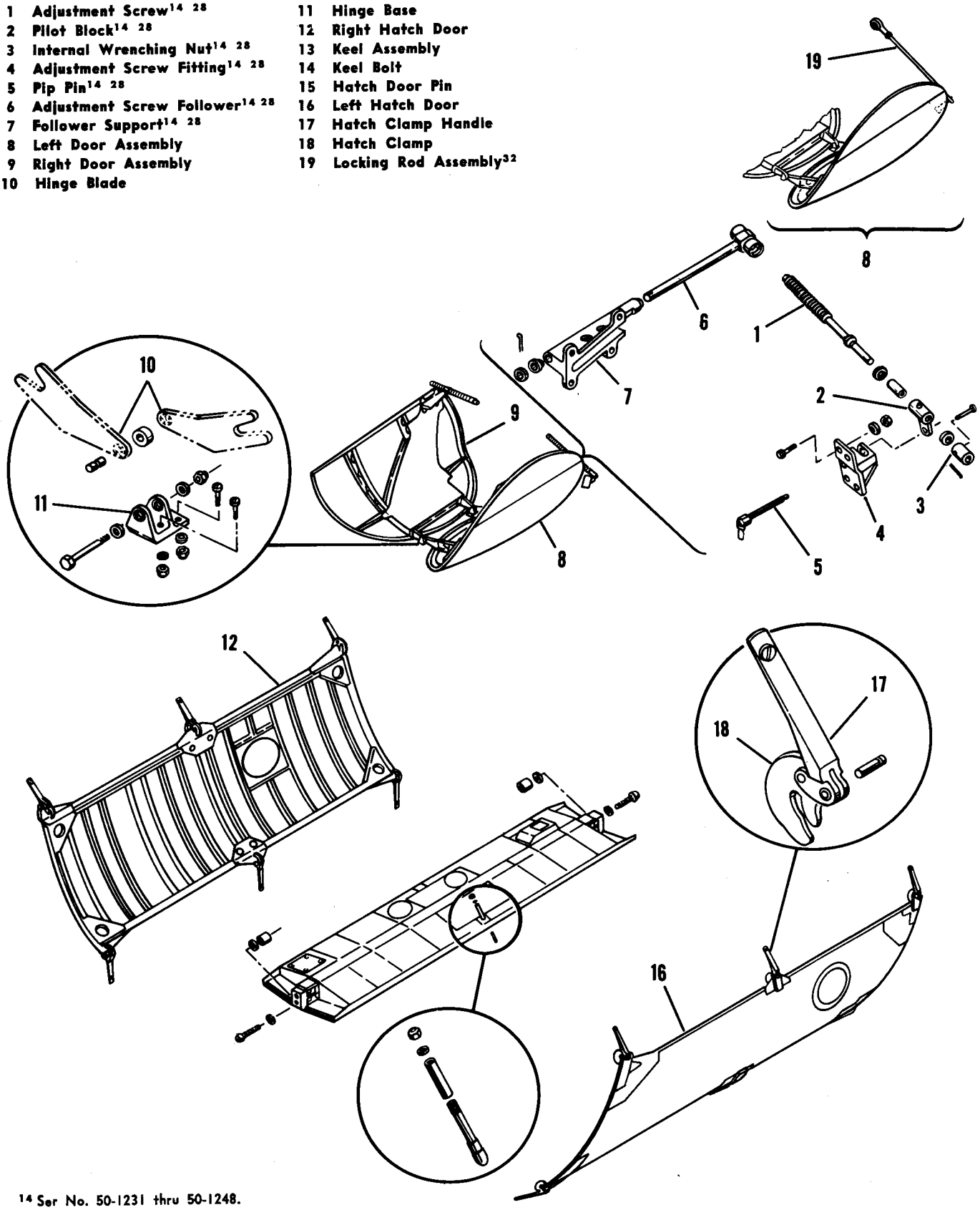

[14] Ser No. 50-1231 thru 50-1248.
[28] Ser No. 51-15238 thru 51-15257.
[32] Ser No. 51-51258 thru 51-15269.

Figure 2-33. Engine Compartment Hatches, Keel Section, and Air Exit Doors

c. Break the supercharger and fuel pump seal drain lines at the quick-disconnect fittings.

d. Break the intake pipe and exhaust shroud drain lines at the quick-disconnect fittings.

e. Remove the four bolts and lower the keel from the fuselage structure.

2-186. INSTALLATION. Installation of the keel is the reverse of the removal procedure. The keel attaching nuts should be tightened to a torque of 1000–1400 pound-inches. Place the engine keel nut wrench (22E5902, figure 1-27) in position, insert a 20-inch torque wrench in the keel nut wrench with the handles parallel, and tighten the nut until the indicated torque is 808–1132 pound-inches. Due to the offset position of the torque wrench, this will give the desired torque of 1000–1400 pound-inches on the nut. If a different length torque wrench must be used, see table 1-3 for details of calculating the new indicated torque.

2-187. AIR EXIT DOORS. **YH-21 H-21A**

2-188. DESCRIPTION. (See figure 2-33.) The YH-21 and H-21A helicopters[28] are provided with ground-adjustable air exit doors (8 and 9). These doors may be adjusted to vary the amount of air escaping from the engine compartment. The doors may be moved, independently, from outside the helicopter by turning the internal wrenching nut (3) located in the fuselage just aft of the door. On H-21A helicopters[32] not equipped with the adjustable doors, a fixed door, held closed by a rod assembly (19), is provided.

2-189. REMOVAL. (See figure 2-33.) Remove the air exit doors as follows:

a. Remove the self locking pin (5) which attaches the actuating mechanism to the fuselage structure.

b. Remove the bolts which attach the hinge blades (10) to the hinge base (11) on the fuselage keel and remove the door.

Note

Since the right door (9) is reduced in size to clear the oil tank when opened, it will easily slide out through the air exit hole. However, the left door must be rotated until it will fit through the air exit hole.

c. To remove the air exit door on H-21A helicopters[32] not equipped with the ground-adjustable units, disconnect the rod assembly which secures the door in position, and proceed as previously instructed for YH-21 helicopters.

2-190. INSTALLATION. Installation is the reverse of the removal procedure.

2-191. NOSE ENCLOSURE.

2-192. DESCRIPTION. (See figure 2-34.) The nose enclosure is composed of 13 window panels and the necessary structural framework to support them. Twelve of the panels are 0.100 inch thick transparent plastic and one is 0.300 inch thick laminated glass. The laminated glass panel is located on the right side in front of the pilot to provide clearer vision and a scratch-proof surface for the windshield wiper. The upper right panel contains mounting provisions for the outside air temperature bulb.

2-193. REMOVAL. Any of the nose enclosure window panels may be removed as follows:

a. Remove the screws in all retaining strips around the panel.

b. Remove the retaining strips.

c. Remove the panel.

2-194. INSTALLATION. To install any panel, reverse the removal procedure.

2-194A. CRITERIA FOR LIMITS AND TOLERANCES OF CANOPY DEFECTS.

2-194B. DEFINITIONS.

a. Nicks—Broken indentions or cavities having sharp edges.

b. Dents—Depressions or hollows left by blows or concentrated pressures.

c. Scratches—Tears in the surface made by pointed object.

d. Cracks—Narrow fractures extending deeper than scratches.

e. Crazing—A pattern or area of tiny fissures or splits.

f. Discoloration—Occurs as a brown to dark brown color.

2-194C. CRITICAL VISION AREA. (See figure 2-34A.)

a. Nicks, dents, and scratches—Allowable damage and repairs are limited to those which can be eliminated by buffing. Buffing shall not be so excessive as to cause optical distortion. Subject to the requirement against optical distortion, there is no limitation on frequency or size of damaged areas.

b. Cracks, holes, and crazing—No allowable limits and no repairs permitted. Replacement mandatory.

c. Discoloration—None allowable. Surface discoloration may be removed by buffing.

[28] Ser No. 51-15238 thru 51-15257.

[32] Ser No. 51-15238 thru 51-15269.

2-194D. CRITICAL STRESS AREA. (See figure 2-34A.) No critical stress areas exist in the transparent plastic regions since they are not considered primary structure. There is some critical stress at the attaching points, but repairs at those points may be made in the same manner and under the same conditions as in semi-critical areas.

2-194E. SEMI-CRITICAL VISION AND STRESS AREA. (See figure 2-34A.)

a. Nicks, scratches, and dents—Small damage may be removed by buffing. If buffing is not successful, a patch may be used subject to a maximum length of six inches.

b. Cracks and holes—Cracks and holes are repairable by patching providing the patch is not longer than six inches in any one direction and that the edge of the patch does not extend into the critical vision area. Patches shall be circular or oval-shaped except where bordering the supporting structure. Cracks are temporarily repairable by stop-drilling provided they are not longer than five inches and do not extend into the critical vision area. A minimum distance of six inches is required between the edges of any two patches and/or cracks. There can be no more than 12 linear inches of damage in any one panel.

c. Crazing and discoloration — No repair or replacement necessary if not exceeding six inches in any one direction. Surface discoloration may be removed by buffing.

2-194F. COLD WEATHER OPERATIONS. Do not apply heat too rapidly to cold transparent plastic, as warping or cracking may occur.

2-195. COCKPIT EMERGENCY EXITS.

2-196. DESCRIPTION. (See figure 2-34.) The sliding window panels located on each side of the cockpit provide emergency exits for the pilot and co-pilot. Both windows are similarly shaped and are retained at the top and bottom by tracks on the outside of the fuselage. The window panels may be jettisoned by pulling the handle (12) which turns a cam assembly attached to the window tracks. This cam thrusts the tracks forward off their tapered mounting pins allowing the windows to fall free. The windows are normally opened by depressing a trigger located at the forward lower corner of the window and by pulling back on the handle above the trigger. A flanged protector strip has been added to the window tracks to prevent the windows from becoming detached in flight. Check the sliding windows for looseness or binding by sliding the windows in the tracks a few times. If the window feels too loose or too tight, check the gap of the upper channel. Bend the channel as necessary to obtain a gap of 0.25 inch.

2-197. REMOVAL. To remove either window, operate the jettison mechanism, making sure the window is being held to prevent it from falling. Lower the window to allow the bottom hinge assembly to slide down and free of the bottom track.

NOMENCLATURE KEY FOR FIGURE 2-34

1	Panel Assembly
2	Panel Assembly, Plate Glass
3	Panel Assembly
4	Panel Assembly
5	Panel Assembly
6	Sliding Window Panel Assembly
7	Panel Assembly
8	Panel Assembly
9	Panel Assembly
10	Panel Assembly
11	Sliding Window Panel Assembly
12	Lever Assembly
13	Rod Assembly
14	Cabin Window Panel Assembly
15	Panel Assembly
16	Panel Assembly
17	Panel Assembly
18	Access Panel Assembly

2-198. INSTALLATION. To install either window, reverse the removal procedure with the following precautions:

a. Engage the jettison mechanism and check to see if the hooks of the rod assembly (13, figure 2-34) are securely locked into the jettison keeper of the window.

b. Check the indicator portion of the rod assembly, which is the exposed front end painted yellow. The unexposed portion of the front end is painted red.

CAUTION

If any of the red paint can be seen, the jettison mechanism is improperly engaged and may cause the window to jettison during flight.

c. Ensure that the lever assembly (12) is properly engaged in the rod assembly (13).

d. Check the sliding operation of the windows for freedom of operation.

2-198A. COLD WEATHER OPERATIONS. Do not apply heat too rapidly to cold windows as warping or cracking can occur. Remove any excessive accumulation of dirt and oil from the tracks of the sliding windows to prevent jamming should the excessive accumulation freeze.

2-199. CABIN WINDOWS.

2-200. DESCRIPTION. (See figure 2-34.) There are seven windows in the cabin of the YH-21 and H-21A helicopters, three on the left side and four on the right. The H-21B and H-21C helicopters have nine cabin windows, four on the left and five on the right. The windows are all oval shaped and made of 0.060-inch thick transparent plastic. Oval shaped Z-stiffeners, riveted

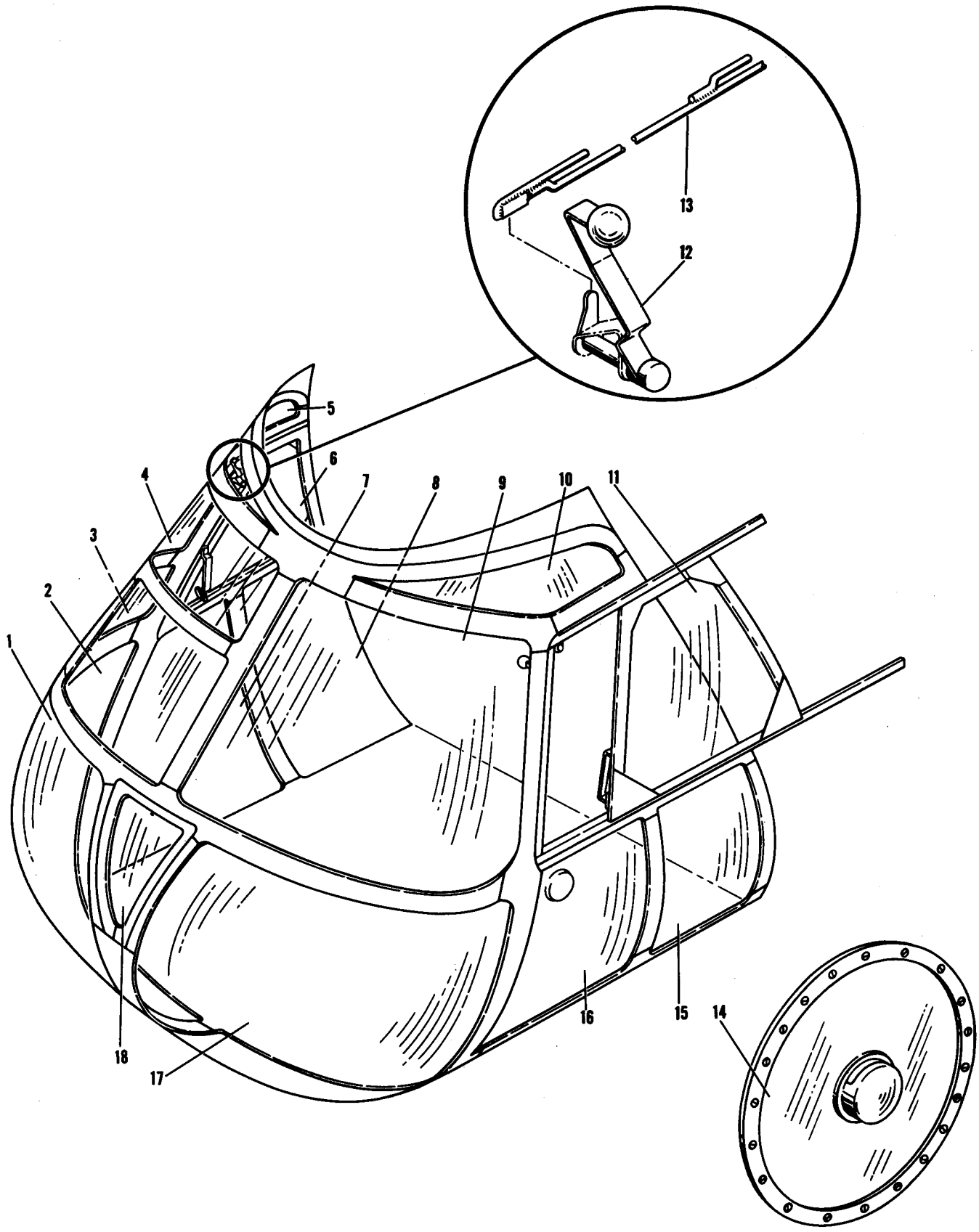

Figure 2-34. Nose Enclosure and Cabin Windows

to the outside skin, protect and frame the window panes. Each pane is attached to its stiffener by screws and elastic stop nuts.

2-201. REMOVAL. The windows are removed by removing the anchoring screws and lifting out the window and its cap strip.

2-202. INSTALLATION. To install windows, reverse removal procedure.

2-202A. COLD WEATHER OPERATIONS. Do not apply heat too rapidly to cold windows as warping or cracking may occur.

2-203. CABIN EMERGENCY EXITS.

2-204. DESCRIPTION. Two cabin emergency exits are located in the compartment ceiling to the left and right of the heating duct. The exit panels are removed by pulling the cloth tape which is attached to the rubber mounting grommet. The panels may be removed from inside or outside the helicopter. The cabin and rescue doors also may be jettisoned for emergency escape.

2-205. CLEANING TRANSPARENT PLASTIC.

2-206. EXTERIOR SURFACES. The following procedures are for cleaning dirty or marred exterior plastic surfaces:

a. Flush with plenty of water, using the bare hand gently to feel and dislodge the dirt, salt or mud.

b. Wash surface with soap and water which is free from dirt or other abrasives. A soft cloth, sponge or chamois may be used in washing, but only as a means of carrying the soap and water to the plastic. Use only the bare hand when going over the surface so that any dirt can quickly be detected and removed before it scratches the surface.

c. Dry the plastic with a clean, damp chamois. A soft, clean cloth or soft tissues may be used if care is taken not to continue rubbing the plastic after it is dry.

d. Remove oil and grease by rubbing lightly with a cloth dampened with kerosene or hexane.

CAUTION

Do not use acetone, alcohol, benzene, carbon tetrachloride, de-icing fluids, fire extinguishing fluids, gasoline, lacquer thinners, or window cleaning sprays on acrylic plastic because they will soften the plastic and cause crazing.

e. Do not rub the acrylic plastic with a dry cloth, since an electrostatic charge will build up and attract dust particles. If the surface should become charged, patting or gently blotting with a clean damp chamois will remove this charge as well as dirt.

f. If there is no water available for cleaning purposes, use a soft cloth bunched loosely on the hand and dust the surface lightly to remove dirt and salt particles. Shake out the cloth frequently to free it of clinging dirt and never rub the dirty surface with a cloth.

g. If the surface is scratched only lightly it should be polished with a good grade of commercial wax, which will fill in minor scratches and help prevent further scratching. The wax should be applied in a thin even coat with a soft cloth and brought to a high polish by rubbing lightly with another clean, soft, dry cloth.

CAUTION

Do not attempt hand polishing until the surface is clean. If dirt, grit and sand are present during the cleaning operation, they may cause more serious damage than the original scratches.

2-207. INTERIOR SURFACES. Polishing and waxing of scratched plastic interior surfaces is accomplished in the same manner as outlined for exterior surfaces in preceding paragraph. Clean interior surfaces as follows:

a. Dust (but do not wipe) the plastic lightly with a soft, clean cloth.

b. Wipe the surface carefully with a soft, dampened cloth or sponge and keep it free of grit by frequent rinsings in clean water.

c. Apply wax as described for Exterior Surfaces.

2-207A. COLD WEATHER CLEANING OF TRANSPARENT PLASTICS. When cleaning transparent plastics at below freezing temperatures, kerosene should be used in place of water to prevent ice formation. All other cleaning procedures and precautions outlined in the preceding paragraphs should be utilized.

2-208. CABIN FLOOR.

2-209. DESCRIPTION. (See figure 2-35.) The cabin floor of the YH-21 helicopter is made up of nine hinged plywood panels fastened to the fuselage with screws and fasteners. The panels are coated with Walkway Compound, Spec MIL-C-5044, type II, class I. The cabin flooring of the H-21A, H-21B and H-21C helicopters consists of 11 hinged metal panels secured to the fuselage structure in the same manner as the YH-21 floor panels. Skid rails are riveted to the flooring of the H-21B and H-21C helicopters for ease of cargo handling. Twenty three tie-down fitting receptacles are built into the panels of the YH-21 and H-21A helicopters and 25 receptacles in H-21B and H-21C helicopters to facilitate the anchoring of cargo, troop seats or litters or a

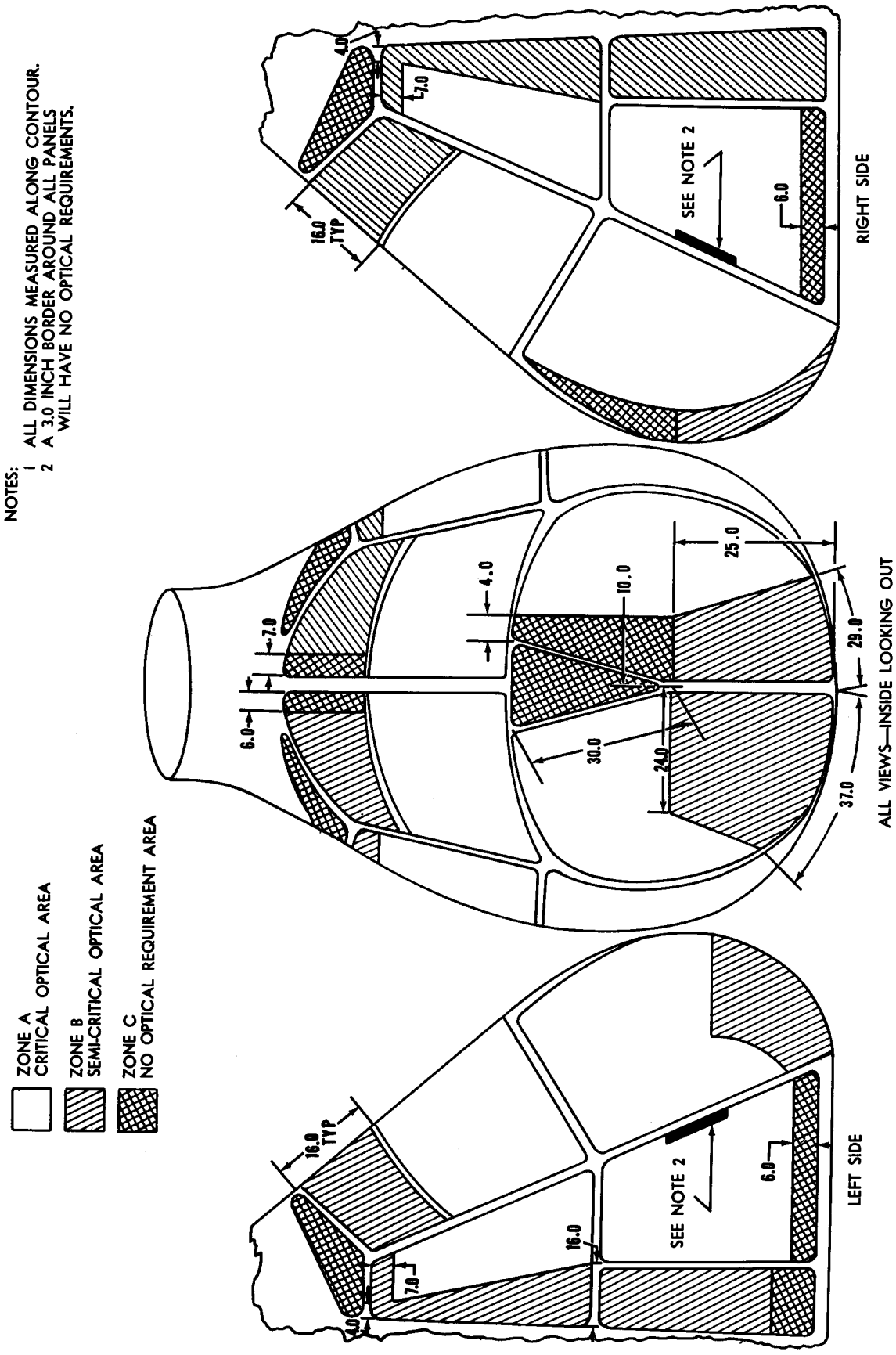

Figure 2-34A. Transparent Plastic Checking Chart

combination of all three. The cabin floor is divided into two sections for loading purposes on YH-21 and H-21A helicopters. A line is painted laterally across the cabin floor at station 220.0. Floor loading forward of this line should not exceed 40 pounds per square foot. Loading aft of the line should not exceed 80 pounds per square foot. Additional lines are painted on the floors of YH-21 and H-21A helicopters at stations 200.00 and 300.00. These lines are balance reference lines. Flooring loading for the entire floor on the H-21B and H-21C helicopters is 130 pounds per square foot.

2-209A. REMOVAL AND INSTALLATION. The flooring may be removed by disconnecting the fasteners and screws.

2-210. APPLICATION OF CABIN FLOOR WALKWAY COATING. (See figure 2-35.)

a. The floor area must be clean and free from oil, grease, dirt, or any other foreign matter.

b. Mask off the floor area to be coated.

c. Apply two coats of zinc chromate primer.

d. Brush two successive coats of non-slip Aircraft Coating, Spec MIL-C-5044, Type I (non-gritty or smooth), allowing one-half hour for drying between coats. It will take a minimum of 24 hours of drying after the final coat for light traffic.

Note

Care must be exercised so as not to cover any of the flooring skid strips.

e. Subsequent retouching will require that the area to be recoated be clean and reprimed.

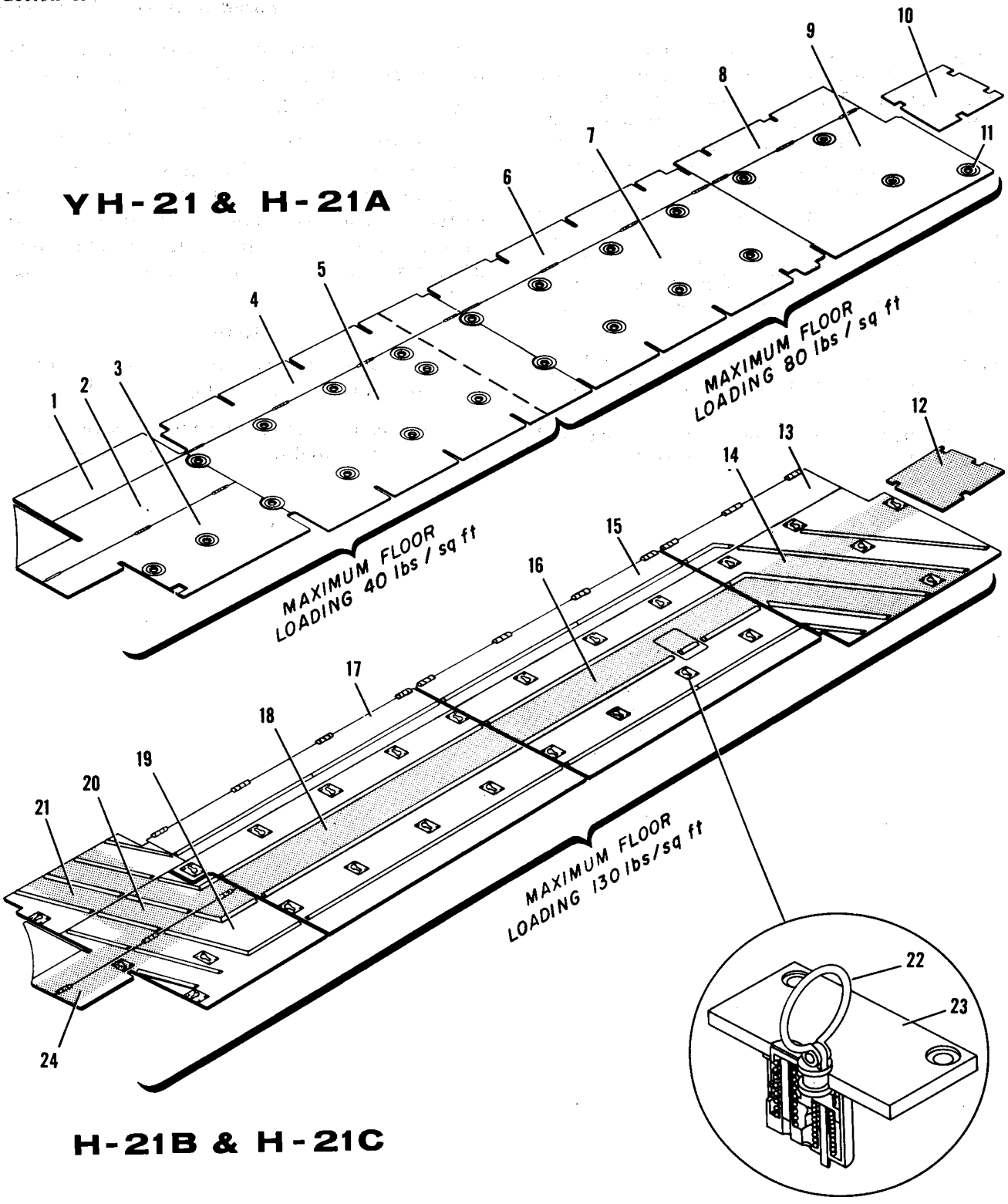

1 Floor Panel
2 Floor Panel
3 Floor Panel
4 Floor Panel
5 Floor Panel
6 Floor Panel
7 Floor Panel
8 Floor Panel
9 Floor Panel
10 Floor Panel
11 Tie-Down Fitting Receptacle, 23
12 Floor Panel
13 Floor Panel
14 Floor Panel
15 Floor Panel
16 Floor Panel
17 Floor Panel
18 Floor Panel
19 Floor Panel
20 Floor Panel
21 Floor Panel
22 Tie-Down Fitting, 25
23 Tie-Down Fitting Receptacle, 25
24 Walkway Coating

Figure 2-35. Cabin Flooring

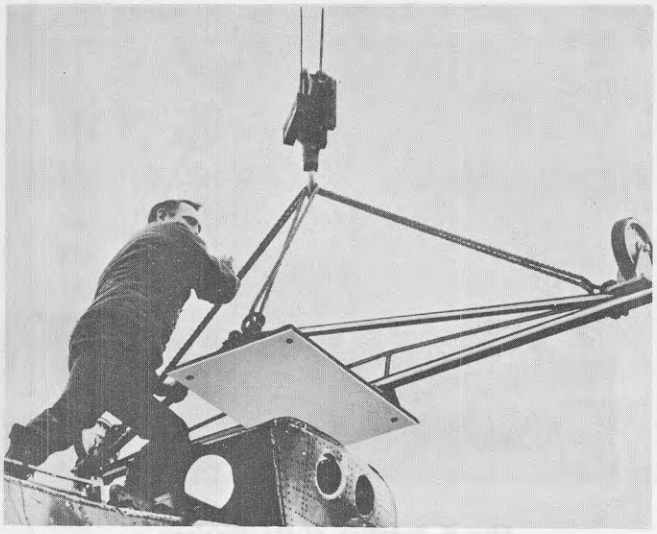

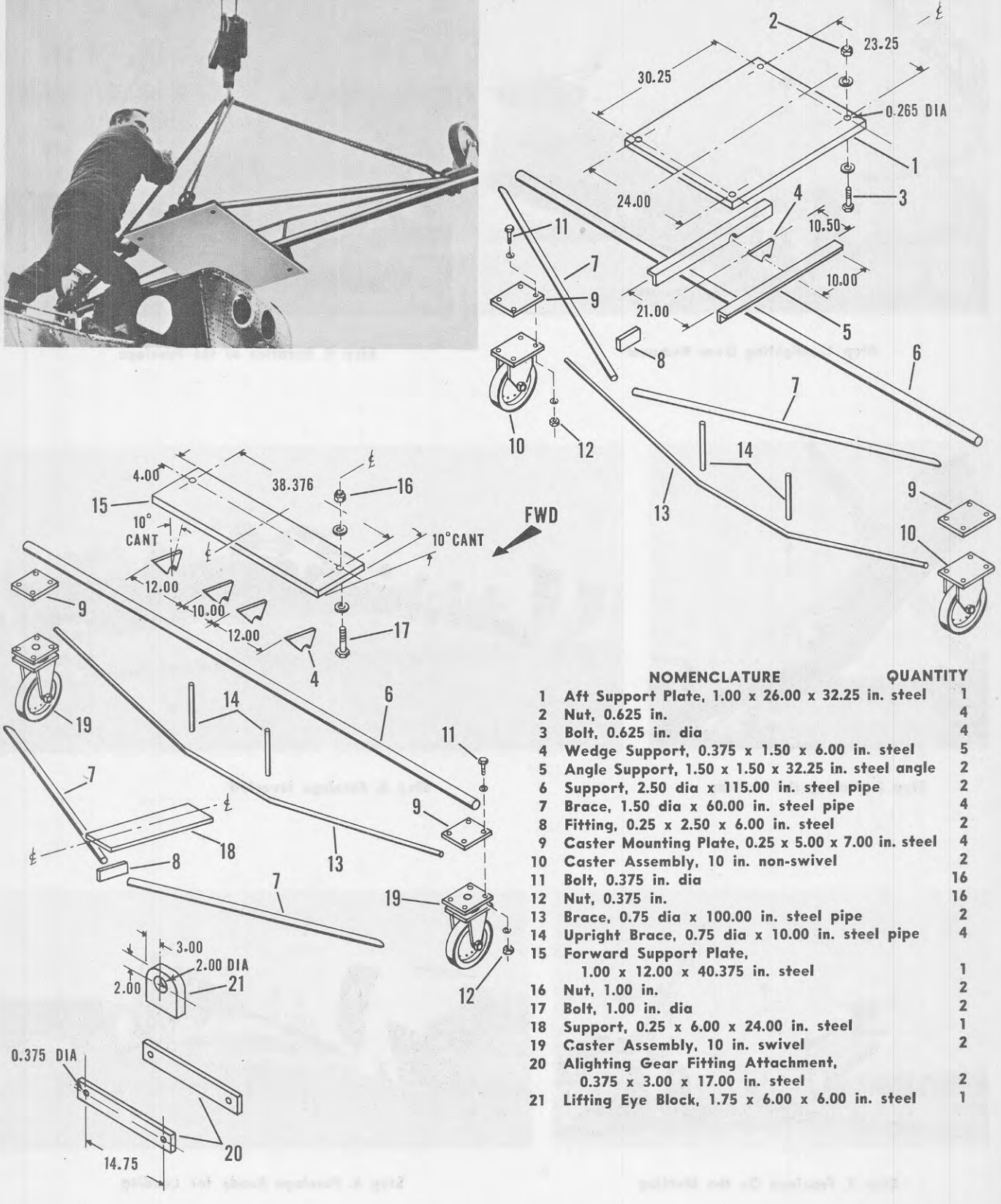

	NOMENCLATURE	QUANTITY
1	Aft Support Plate, 1.00 x 26.00 x 32.25 in. steel	1
2	Nut, 0.625 in.	4
3	Bolt, 0.625 in. dia	4
4	Wedge Support, 0.375 x 1.50 x 6.00 in. steel	5
5	Angle Support, 1.50 x 1.50 x 32.25 in. steel angle	2
6	Support, 2.50 dia x 115.00 in. steel pipe	2
7	Brace, 1.50 dia x 60.00 in. steel pipe	4
8	Fitting, 0.25 x 2.50 x 6.00 in. steel	2
9	Caster Mounting Plate, 0.25 x 5.00 x 7.00 in. steel	4
10	Caster Assembly, 10 in. non-swivel	2
11	Bolt, 0.375 in. dia	16
12	Nut, 0.375 in.	16
13	Brace, 0.75 dia x 100.00 in. steel pipe	2
14	Upright Brace, 0.75 dia x 10.00 in. steel pipe	4
15	Forward Support Plate, 1.00 x 12.00 x 40.375 in. steel	1
16	Nut, 1.00 in.	2
17	Bolt, 1.00 in. dia	2
18	Support, 0.25 x 6.00 x 24.00 in. steel	1
19	Caster Assembly, 10 in. swivel	2
20	Alighting Gear Fitting Attachment, 0.375 x 3.00 x 17.00 in. steel	2
21	Lifting Eye Block, 1.75 x 6.00 x 6.00 in. steel	1

Figure 2-35A. Fuselage Dolly Fabrication and Installation

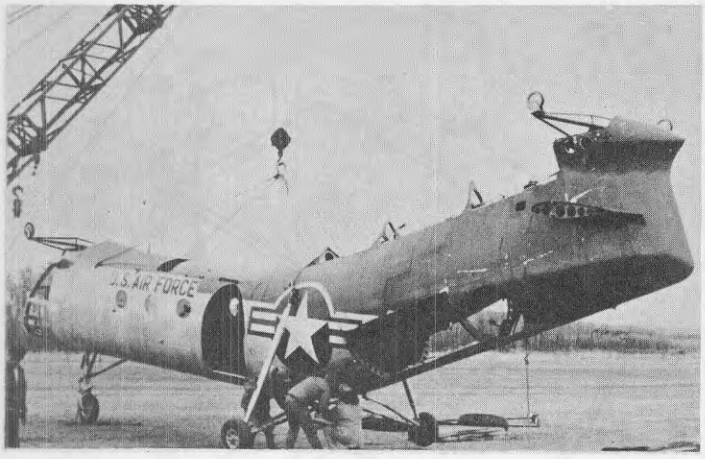

Step 1. Alighting Gear Removal

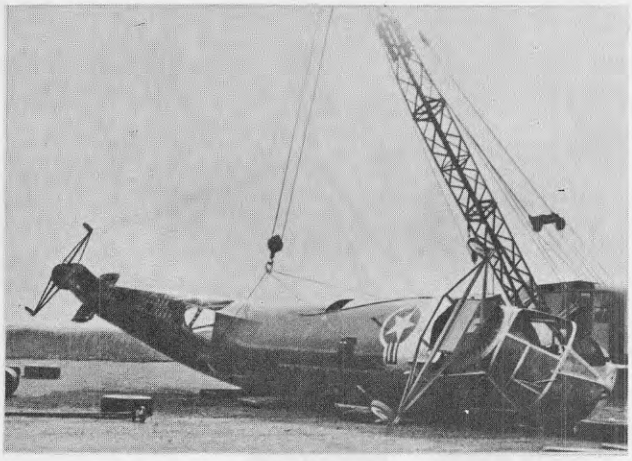

Step 4. Rotation of the Fuselage

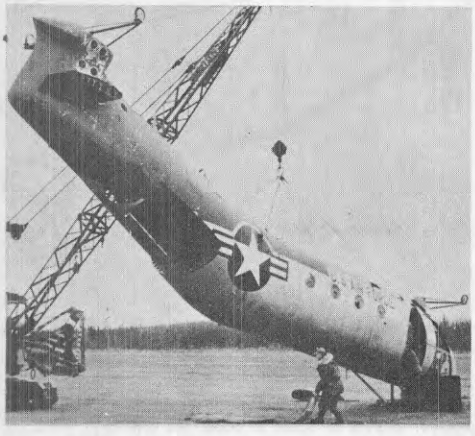

Step 2. Placing the Matting

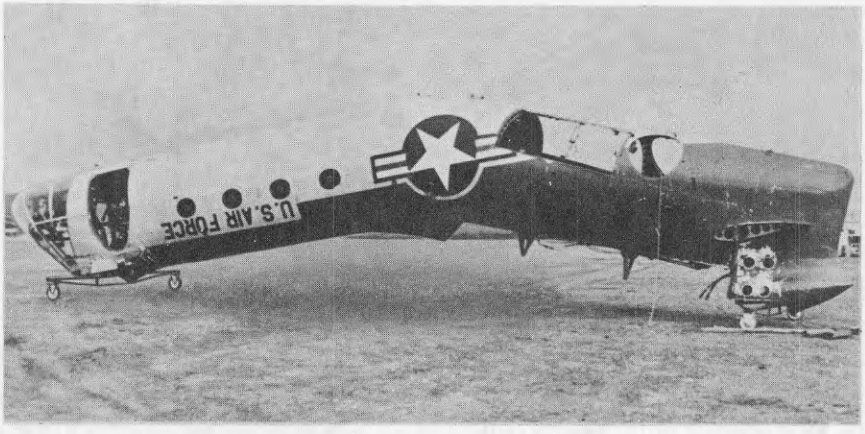

Step 5. Fuselage Inverted

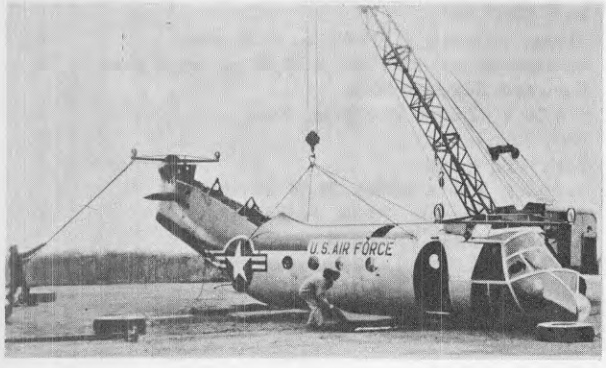

Step 3. Fuselage On the Matting

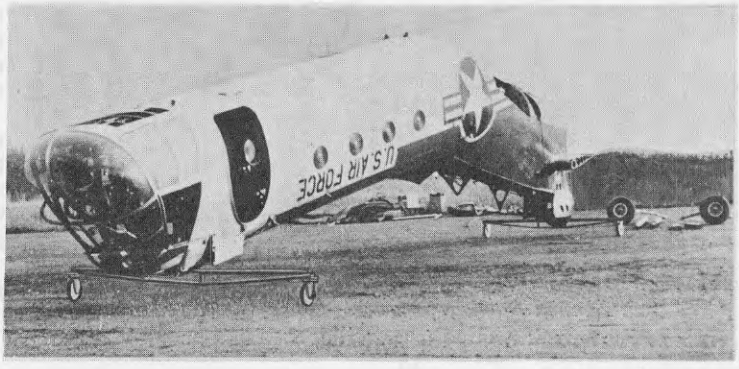

Step 6. Fuselage Ready for Loading

Figure 2-35B. Inverting Fuselage

Step 1. Nose Wheels on Blocks

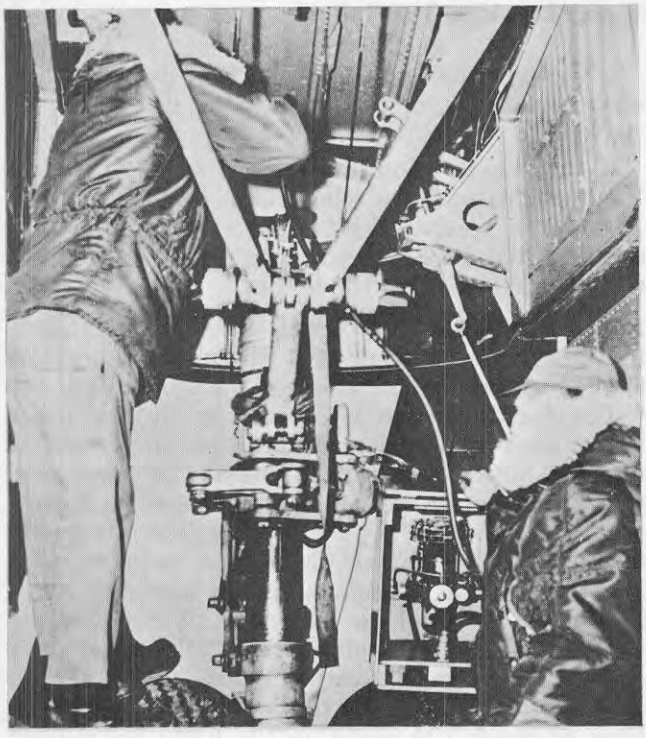

Step 2. Inflating Nose Gear Oleo

Figure 2-35C. Preparing C-124 for Loading H-21

2-210A. FUSELAGE TRANSPORTABILITY.

2-210B. GENERAL. The H-21 series of helicopters has two fuselage configurations. The YH-21 and H-21A helicopters have a one-piece fuselage, while the H-21B and H-21C helicopters have a two-piece fuselage that may be separated at a splice joint at station 359.800. The one-piece fuselage of the YH-21 and H-21A may be air transported (in the stripped condition) by inverting the fuselage and loading it aboard a C-124 aircraft. The two-piece fuselage of the H-21B and H-21C, separated into a forward and aft section, may be transported by a flat bed truck, rail car, or C-124 aircraft. Preliminary studies indicate that either the forward or aft fuselage section may be transported by a C-119 aircraft.

Note

The above means of transport are possible only by the use of special cradles and dollies for loading and securing the fuselage aboard the carrier.

The fuselage in a stripped condition may be transported by suspending it from the cargo sling beneath another H-21 as described in the applicable H-21 Cargo Loading Handbook.

2-210C. TRANSPORTING ASSEMBLED FUSELAGE VIA C-124 AIRCRAFT.

2-210D. GENERAL. The assembled fuselage of any H-21 series helicopter may be transported by C-124 aircraft. This is accomplished by stripping the fuselage of certain equipment, installing two special dollies, inverting the fuselage to rest on the dollies, and loading on a C-124. This method is advantageous when the airframe has been damaged and is being ferried back for repair and conditions prohibit manufacturing the more intricate special dollies used in breaking the splice on the H-21B and H-21C. Inverting of the fuselage requires the use of a large crane.

2-210E. FUSELAGE PREPARATION. The fuselage is prepared for installation of the dollies as follows:

a. Remove the battery.

b. Drain and purge the fuel tank; drain engine oil tank and hydraulic reservoir.

c. Remove the rotor blades, rotor hubs, central and rotor transmissions, and place these components in their proper shipping containers. Remove the engine drive shaft and, if not possible to secure adequately, remove the first section of shafting that attaches to each of the three transmissions.

d. Remove the engine compartment structural doors and keel, and lower the engine to a dolly. Reinstall the engine keel and structural doors.

e. Remove the forward cabin door.

1 Nose Gear Dolly
2 Stabilizing Dolly
3 Main Gear Dolly
4 Aft Jack Point Dolly

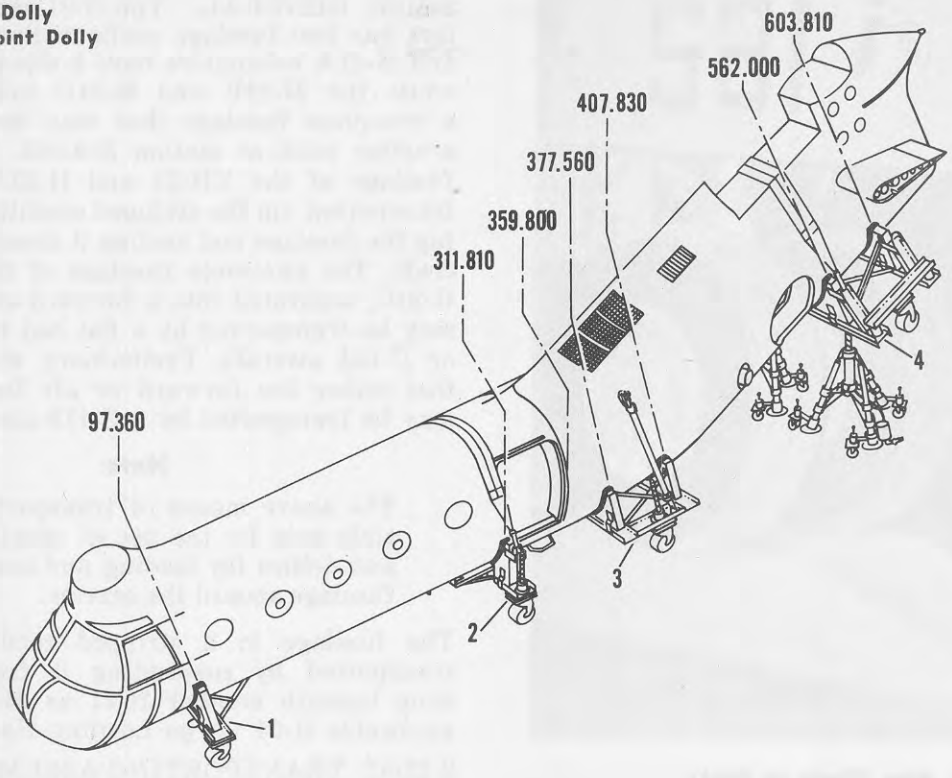

Figure 2-35D. Fuselage Prepared for Breaking the Splice

f. Remove the external cargo sling.

g. Remove the vertical and horizontal stabilizers and place in a storage rack which will support them by the leading edge.

2-210F. DOLLY INSTALLATION. (See figure 2-35A.) The dollies are installed in the following manner:

a. Place the dollies on the ground in the inverted position.

b. Attach a sling, and hoist each dolly up to its installation position (over the rotor transmission attaching bolt holes in the fuselage).

c. Secure the aft rotor transmission dolly with four bolts and the forward rotor transmission dolly with two bolts.

2-210G. INVERTING FUSELAGE. (See figure 2-35B.) The fuselage may be inverted in the following manner:

a. Attach the helicopter hoisting sling, and hoist the fuselage to permit removal of the alighting gear. While the gear is being removed, the fuselage should be stabilized by a rope tied to the aft dolly and snubbed to the ground.

b. Place thick matting, as shown, under the fuselage and make sure it extends at least seven feet beyond the right side of the fuselage.

c. Lower the fuselage to the matting and slowly rotate it to the right until it lies flat on its side.

d. Attach the hoisting fixture to the forward V-brace fittings for the main alighting gear. Attach the hoist to the fixture, raise the fuselage until in the inverted position, then lower it to the ground to rest on the dollies.

2-210H. LOADING AND UNLOADING. Loading and unloading of the H-21 fuselage in a C-124 requires preparation of the C-124. Roll the C-124 forward onto a 10-inch x 10-inch block under each of the nose wheel tires as shown in figure 2-35C. Then inflate the C-124 nose gear oleo to maximum extension (this must be accomplished with the C-124 tail support jack removed). Reinstall the C-124 tail support jack and tow the H-21 fuselage aboard nose first, with the winch secured to the dolly. Tie down the H-21 fuselage and deflate the C-124 nose gear oleo to the normal position before flight. It will be necessary to take the blocks for the nose wheel tires of the C-124 along on the flight to be used when the helicopter is unloaded.

2-210I. ERECTING FUSELAGE. (See figure 2-35B.) The fuselage may be rotated to its normal upright position as follows:

a. Attach a hoist to the hoisting fixture on the

fuselage, raise the fuselage, deflect it to one side, and slowly lower it onto its right side. Matting must be used to protect the fuselage.

b. Remove the hoisting fixture, attach the helicopter hoisting sling, roll the helicopter to its normal upright position, and lift it free of the ground.

c. Install the alighting gear, then lower the fuselage to the ground.

d. Remove the helicopter hoisting sling.

2-210J. REINSTALLATION OF COMPONENTS. The components removed to accommodate rotating the fuselage are to be installed as follows:

a. Remove the structual doors and keel, install the engine package, and reinstall the keel and structural doors.

b. Install the external cargo sling.

c. Install the forward cabin door.

d. Install the three transmissions, the two rotor hubs, blade sets, and the horizontal and vertical stabilizers. Install and connect the drive shafting.

e. Service the helicopter as directed in Servicing, Section I.

f. Install and connect the battery.

g. Phase the rotor blades as directed under Drive Shafting, Section V.

2-210K. TRANSPORTING FUSELAGE SECTIONS VIA C-124 AIRFCRAFT.

H-21B & H-21C

2-210L. GENERAL. The entire fuselage on the H-21B and H-21C helicopter must be placed on dollies and the splice broken for the two fuselage sections to be loaded separately in a C-124 aircraft. The operation can be accomplished with relative ease, the most difficult phase being placement of the fuselage on and removal of it from dollies. The use of jacks only is described in accomplishing this phase so that breaking of the splice can be performed at any time, anywhere, without hoists. However, a hoist or combination of hoists would accelerate and simplify transfer of the fuselage onto or off the dollies.

2-210M. PREPARING TO BREAK FUSELAGE SPLICE. (See figure 2-35D.) The following items must be accomplished prior to breaking the fuselage splice. It is not necessary that the sequence given be followed except for step a., which must be accomplished first.

a. Disconnect the battery and secure the plug back and out of the way.

b. Drain and purge the fuel tank.

c. Remove the fire extinguisher and its mounting bracket.

d. Remove the insulation curtain from in front of the fuel tank. The first section of the insulation blanket just in front of the insulation curtain must be loosened and pulled back from the splice.

e. Remove the rotor blades and horizontal and vertical stabilizers. Place the blades in a shipping container and the stabilizers in a storage rack which will support them by the leading edge.

f. Remove the ground liaison antenna and mast, the ARC Type A-12 antenna, and the R11A loop antenna from beneath the forward section of the fuselage.

Note

This is necessary only if the stabilizing dolly for the forward fuselage section cannot be adjusted to provide sufficient ground clearance for the above antennas.

g. Lower the cabin heater ducting, disconnect the electrical wiring to the aft duct, and remove the aft duct.

h. Remove the drive shaft section from just in front of the central transmission.

Note

Place all hardware removed back into the assembly, in proper position and direction to ensure correct reinstallation.

i. Remove the main cabin door by jettisoning, and remove the hand grip (22E4192-5) near the door latch.

j. Remove the flooring section from just in front of the splice location.

k. Break the cargo sling release cable quick disconnect joint located on the left side and just aft of station 339.5. Pull the rear cable section back through the splice area and wire it back and out of the way.

l. Remove the external cargo sling (if installed).

m. Remove the cable shield assembly from over the control cables in the splice area.

n. Read and record the tension on each control cable, and remove the fairlead from around the cables. Cut the lock wire and release the quick disconnects of each cable. Secure the upper cable ends back and out of the way. Remove the retaining hardware (or pull the bolts on the pulleys) for the two pulley brackets at the bottom of the fuselage. Secure the parts and cables back and out of the way.

o. Remove the two aft dorsal fairing assemblies located above the rear transmission drive shaft.

Note

The cowling around the transmission must be released from these sections before removal.

p. Remove the auxiliary fuel tanks and their sway braces from underneath the fuselage (if installed).

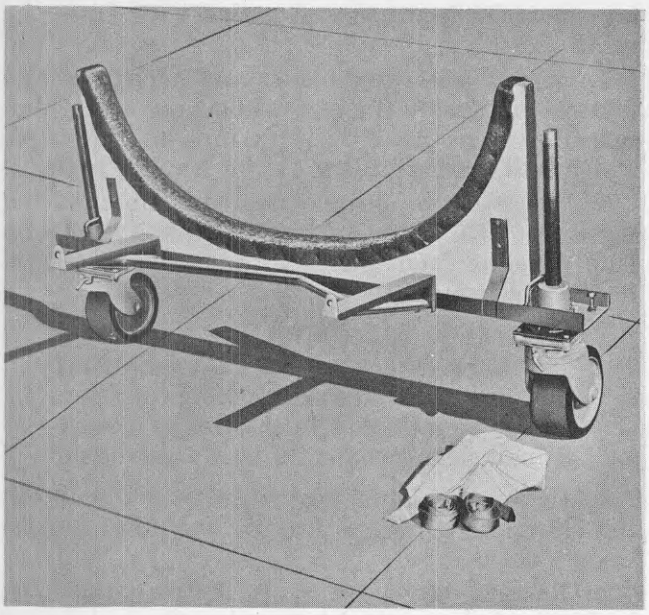

	NOMENCLATURE	QUANTITY
1	Brace, 0.25 x 2.50 x 9.00 in. steel	4
2	Bolt, 0.25 in. dia	19
3	Nut, 0.25 in.	19
4	Washer, 0.25 in.	As Reqd
5	Cradle, 1.00 x 33.50 x 80.00 in. plywood	4
6	Support, 1.50 x 3.00 x 26.687 in. steel channel	2
7	Brace, 1.50 dia x 36.00 in. steel pipe	2
8	Cross-Brace, 1.00 dia x 30.00 in. steel pipe	2
9	Fitting, 0.25 x 3.00 x 3.00 in. steel	2
10	Gusset, 0.25 x 0.75 x 5.00 in. steel	2
11	Vertical Support, 0.375 x 4.00 x 8.00 in. steel	2
12	Support, 1.92 x 6.00 x 100.00 in. steel channel	1
13	Tie-Down Ring, 0.50 dia x 16.00 in. round steel bar	2
14	Support, 0.25 x 3.00 x 6.00 in. steel	4
15	Bolt, 0.50 in. dia	4
16	Nut, 0.50 in.	4
17	Caster Assembly	2
18	Caster Mount	2
19	Bolt, 0.375 in. dia	4
20	Nut, 0.375	4
21	Canvas Tie-Down	1
22	Tie-Down Strap	2
23	Nail	As Reqd

Figure 2-35E. Stabilizing Dolly Fabrication

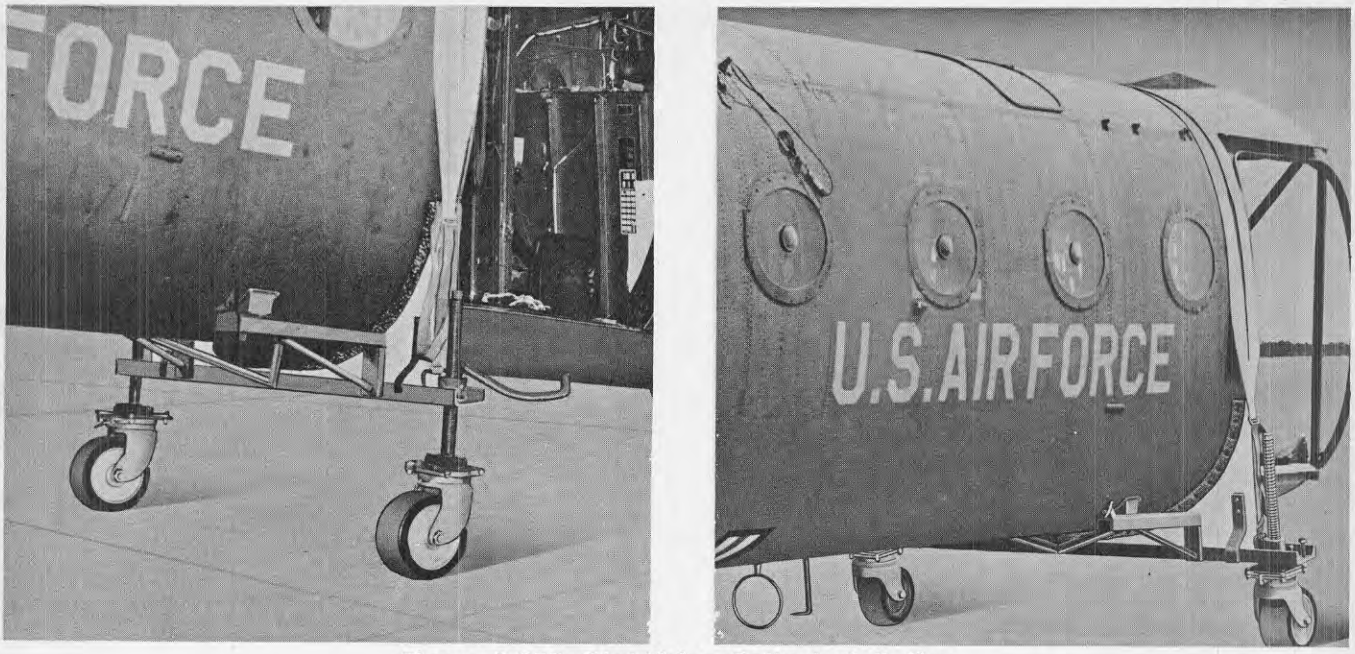

Figure 2-35F. Stabilizing Dolly Installation

q. Disconnect the cap off the following lines:
1. Forward transmission-to-oil cooler.
2. Cabin heater.
3. Manifold pressure.
4. Hydraulic brake lines, left- and right-hand (at splice bulkhead and where they come out of the fuselage).
5. Auxiliary fuel line (if installed).

r. Accomplish the following on the electrical system:
1. Disconnect the clamps from the cable pack leading to the aft junction box. Split the pack, push the wires not requiring removal to one side, disconnect the remaining wires, pull them forward through the splice, and secure them out of the way.
2. Disconnect the clamps on the wire pack for the auto-pilot (if installed), gyro amplifier, and compass units from the splice back to the units; disconnect and pull the pack forward of the splice and secure it out of the way.
3. Disconnect the connector plug for the ignition wire, and secure the free end.
4. Disconnect the a-c power cable pack connector plug in the upper part of the fuselage and secure the free end.

2-210N. DOLLY INSTALLATION. Install the dollies to support the fuselage for breaking the splice as follows:

a. Engage the static lock on the nose and main gear oleos by partly deflating the oleos, engaging the lock, and inflating the oleos until the lock is held rigidly in place.

b. Install the stabilizing dolly at station 311.810 as follows (see figure 2-35F):
1. Move the dolly into position under the frame just in front of the main cabin door.
2. Remove the bolts which attach the bomb rack support castings to the fuselage, shift the dolly until its supports line up with the bolt holes, and install the bolts, thus securing the dolly to the fuselage.
3. Attach a strap to one side of the dolly, pass the strap up and over the fuselage, and snub it on the other side.
4. Snub the adjustable wheels against the ground.

c. Install the aft jack point dolly between stations 603.810 and 562.0 as follows (see figure 2-35H):
1. Remove the aft jack point.
2. Iift the dolly into place and install the special bolt that replaces the aft jack point.
3. Install a jack and snub tight.

Note

Hold the dolly until the jack is in place to prevent damaging the bolt and to prevent the helicopter from tilting down at the tail.

4. On the forward side of the dolly, attach a strap, pass it over the fuselage (but under the drive shaft), and snub the strap tight on the opposite side.

d. Install the main gear dolly between stations 377.560 and 407.833 as follows (see figure 2-35K):

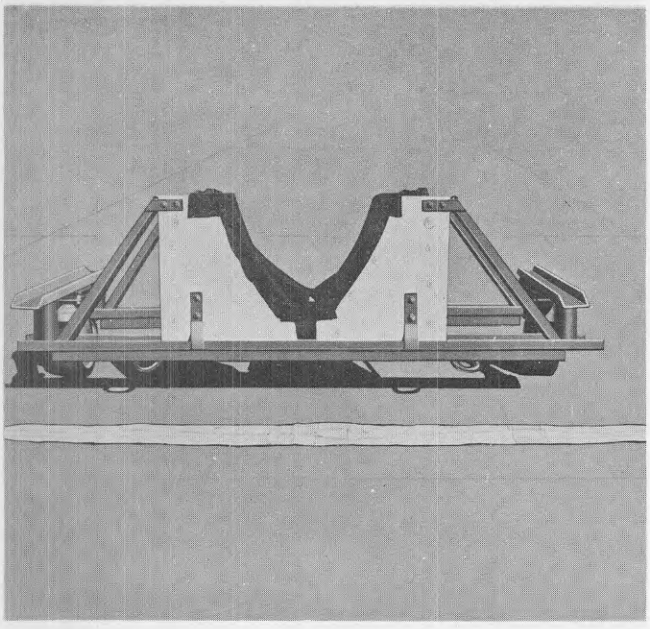

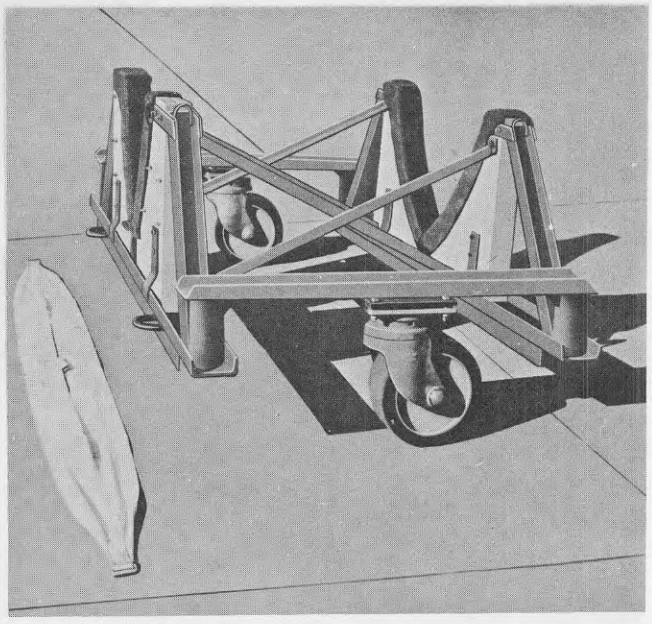

	NOMENCLATURE	QUANTITY
1	Canvas Tie-Down	1
2	Tie-Down Strap	2
3	Padding, 0.50 x 8.00 x 170.00 in. felt	As Reqd
4	Bolt, 0.75 in. dia	8
5	Nut, 0.75 in.	8
6	Washer, 0.75 in.	As Reqd
7	Brace, 1.92 x 6.00 x 31.50 in. steel channel	8
8	Bolt, 0.25 in. dia	44
9	Nut, 0.25 in.	44
10	Washer, 0.25 in.	As Reqd
11	Brace, 0.25 x 2.50 x 9.00 in. steel	8
12	Cradle, 1.00 x 33.50 x 48.25 in. plywood	8
13	Support, 0.375 x 4.00 x 10.00 in. steel	8
14	Tie-Down Ring, 0.50 dia x 16.00 round steel bar	4
15	Caster Assembly	2
16	Caster Mounting Plate, 0.50 x 12.00 x 12.00 in. steel	2
17	Bolt, 0.375 in. dia	8
18	Nut, 0.375 in.	8
19	Aft Jacking Pad Attachment Bolt, 0.50 in. dia	1
20	Caster Support, 1.92 x 6.00 x 48.00 in. steel channel	2
21	Support, 5.00 dia x 12.00 in. steel pipe	4
22	Gusset, 0.25 x 4.00 x 4.00 in. steel	4
23	Gusset, 0.25 x 3.00 x 4.00 in. steel	4
24	Support, 1.92 x 6.00 x 96.00 in. steel channel	2
25	Tie-In Bracket, 0.25 x 2.00 x 4.00 in. steel	4
26	Support, 1.92 x 6.00 x 88.00 in. steel channel	1
27	Jacking Pad, 1.50 dia x 3.00 in. round steel bar	4
28	Drag-Ring, 0.50 dia x 28.00 in. round steel bar	2
29	Cross-Brace, 0.50 x 1.50 x 46 in. steel angle	4
30	Nail	As Reqd

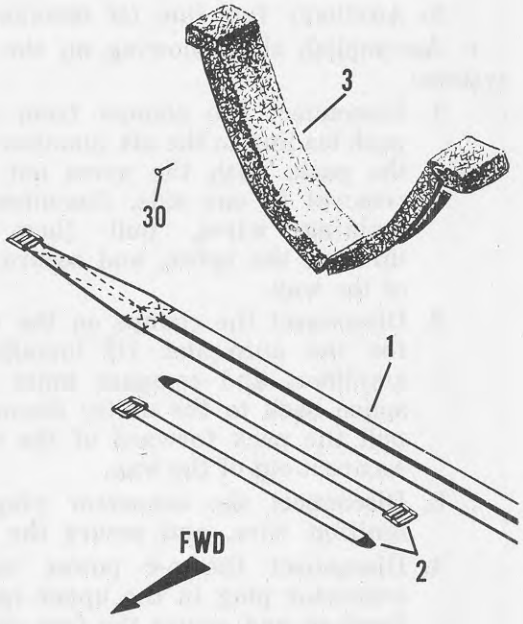

Figure 2-35G. Aft Jack Point Dolly Fabrication (Sheet 1 of 2)

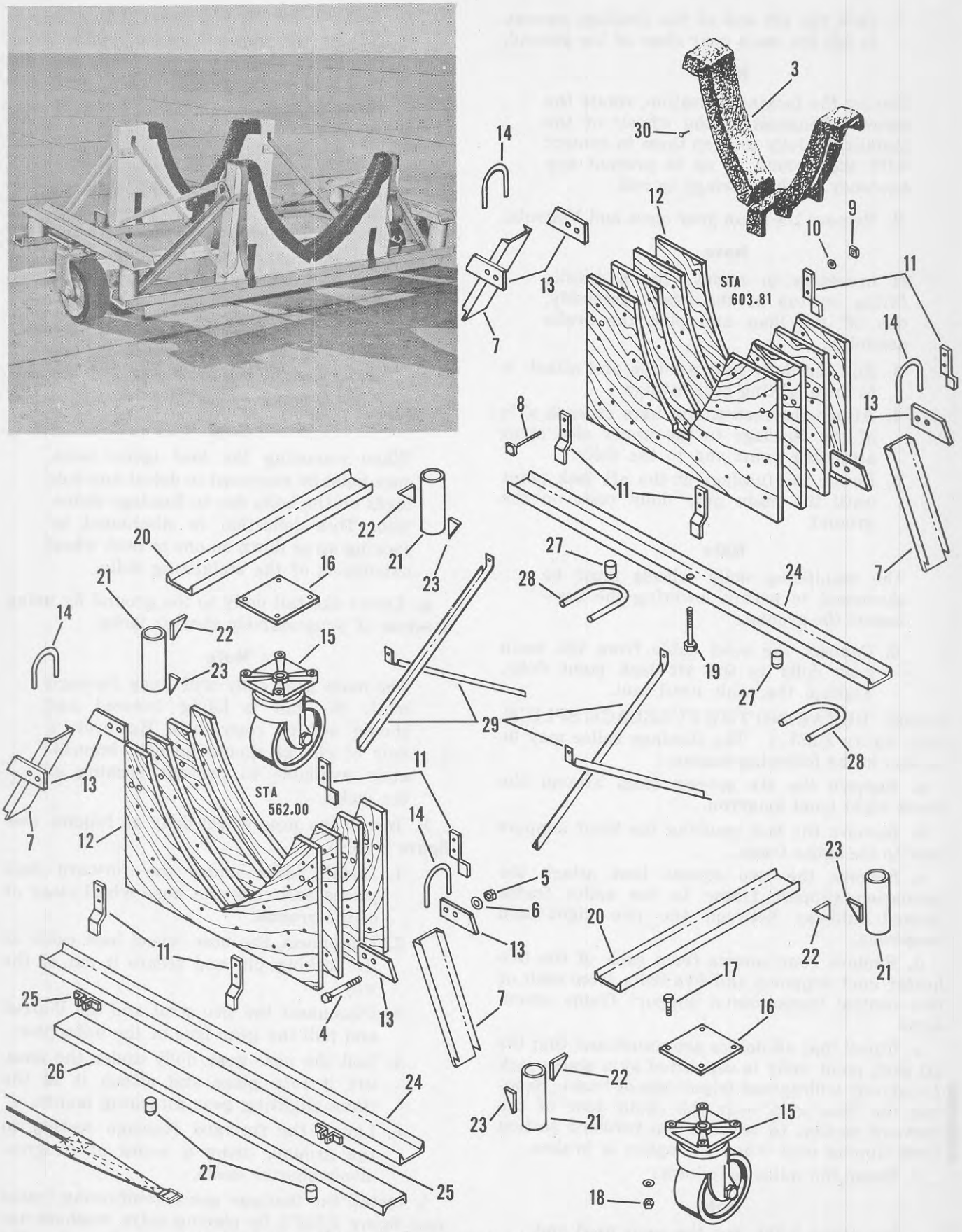

Figure 2-35G. Aft Jack Point Dolly Fabrication (Sheet 2 of 2)

1. Jack the aft end of the fuselage enough to lift the main gear clear of the ground.

Note

During the jacking operation, rotate the screw extensions of the wheels of the stabilizing dolly to keep them in contact with the ground so as to prevent any tendency of the fuselage to roll.

2. Remove the main gear oleos and V-struts.

Note

If necessary to remove the hydraulic fitting on top of the brake assembly, cap off the lines and plug the brake assembly.

3. Roll the dolly into position and attach it to the alighting gear fittings.
4. Attach the restraining bars on each side of the fuselage to the upper oleo strut attaching point and to the dolly.
5. Lower the fuselage at the aft jack point until the main gear dolly rests on the ground.

Note

The stabilizing dolly wheels must be shortened to permit lowering the fuselage to the ground.

6. Connect the steel cable from the main gear dolly to the aft jack point dolly. Tighten the cable until taut.

2-210O. BREAKING THE FUSELAGE SPLICE. (See figure 2-35L.) The fuselage splice may be broken in the following manner:

a. Remove the six screws from around the lower right-hand longeron.

b. Remove the bolt securing the litter support tube to the splice frame.

c. Remove the two screws that attach the insulation support frame to the splice frame located midway between the two right-hand longerons.

d. Remove four screws from each of the two heater duct supports and five bolts from each of two central transmission support frame extensions.

e. Check that all dollies are secure and that the aft jack point dolly is supported by a stable jack (relatively widespread tripod legs or base). Sandbag the floor area near the cabin door of the forward section to prevent the forward section from tipping over when the splice is broken.

f. Break the splice as follows:

Note

See figure 2-35L for the tools used and their point of application.

1. Remove the 76 1/4-inch bolts.
2. Loosen the upper longeron splice bolts, the lower longeron splice bolts, and the two keel bolts, in that order, until 4–6 threads remain engaged, using special tools, as required.

Note

While loosening the top bolts, take up on the aft jack point to prevent the splice from breaking more than approximately one-eighth inch, or, if no crack occurs, back off on the jack to cause a crack to form.

3. After all six bolts are loose and the splice deflection is held in check by the tail jack, remove the bolts and roll the forward fuselage section clear.

Note

When removing the keel splice bolts, care must be exercised to detect any side loads on the bolts due to fuselage deflection. This deflection is eliminated by jacking up or down on one or both wheel extensions of the stabilizing dolly.

g. Lower the tail dolly to the ground by using a series of progressively shorter jacks.

Note

The main gear dolly will creep forward while the tail is being lowered and should *not* be restrained. However, a pair of chocks should be held immediately available to prevent rocking of the jacks.

h. Install the nose wheel dolly as follows (see figure 2-35N):

1. Install jacks under the forward jack points and jack the nose wheel clear of of the ground.
2. Disconnect the nose wheel lock cable at the locking pin and secure it out of the way.
3. Disconnect the oleo strut and the V-strut and pull the gear free of the helicopter.
4. Roll the nose gear dolly under the nose, lift it into place and attach it at the three alighting gear attaching points.
5. Lower the forward fuselage section to the ground, using a series of progressively shorter jacks.

i. Install the fuselage splice reinforcing frame (see figure 2-35P) by placing extra washers under the bolt heads and bolting the frame to the

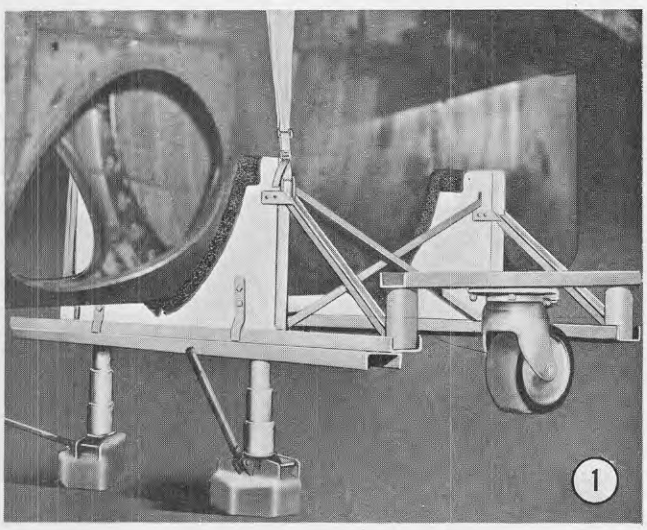

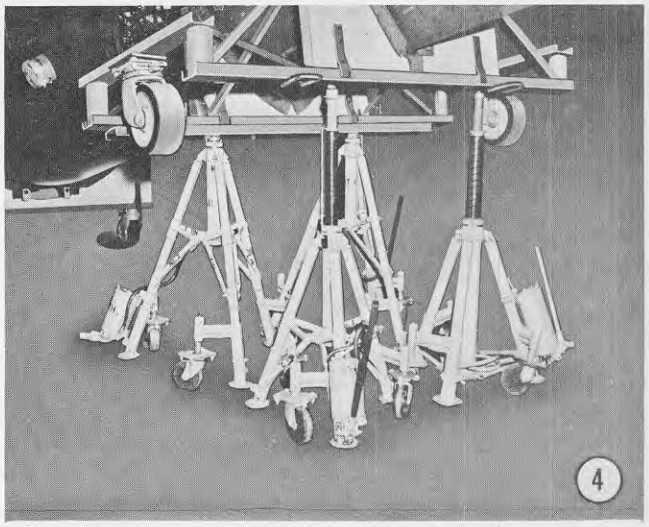

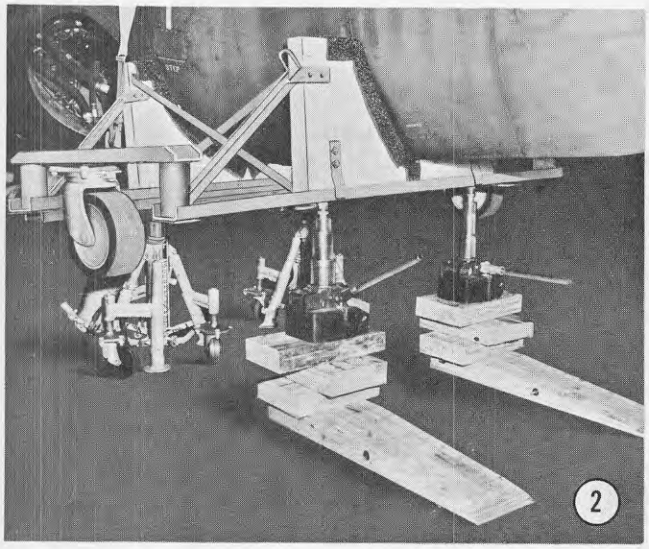

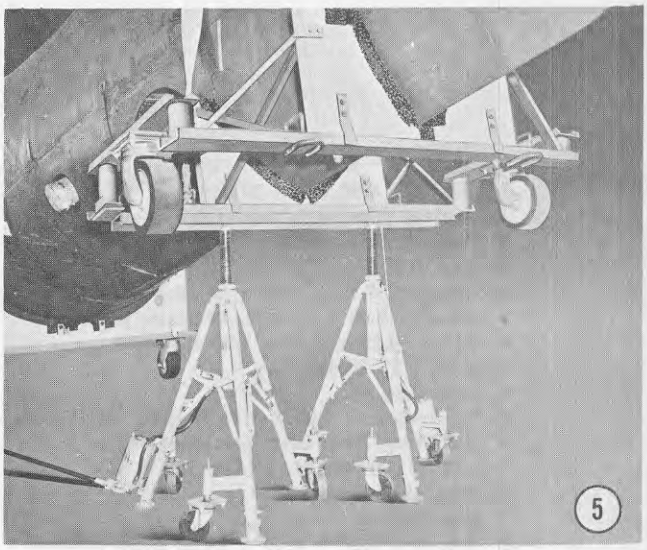

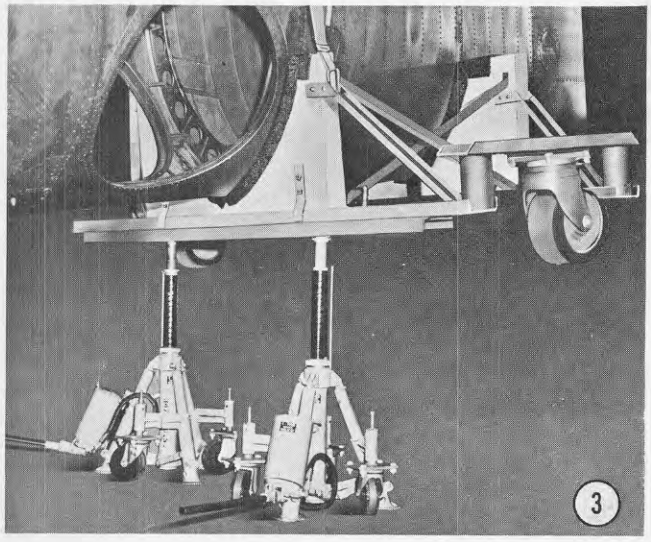

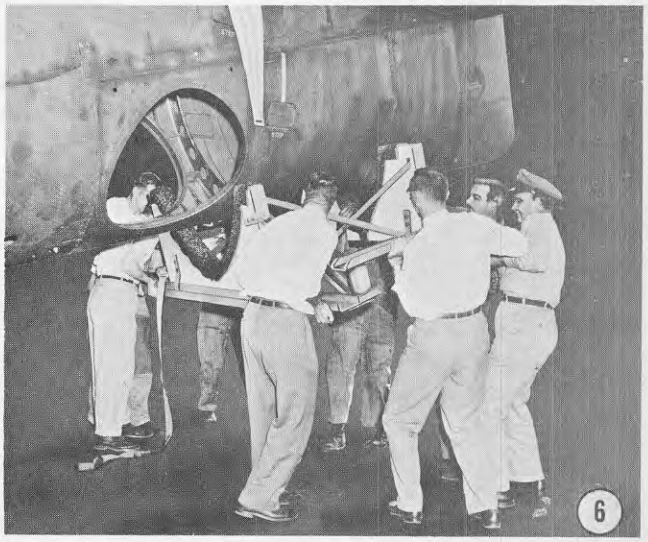

Figure 2-35H. Aft Jack Point Dolly Installation

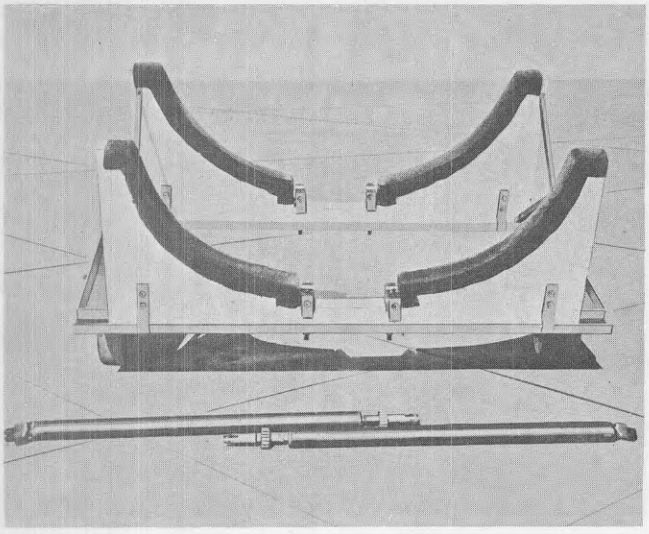

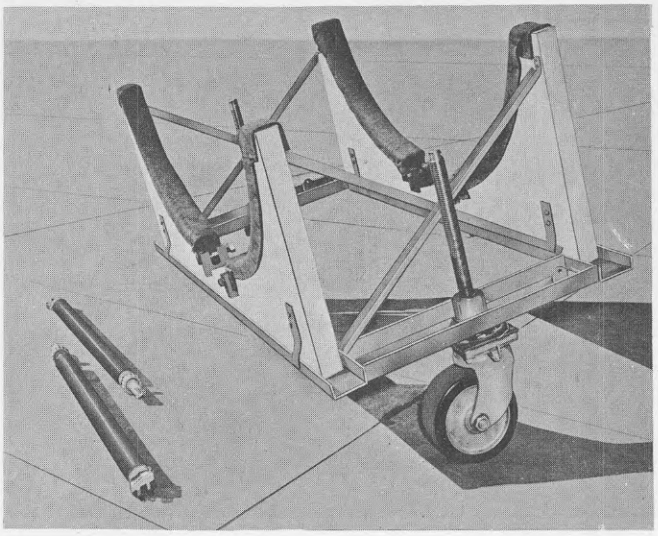

	NOMENCLATURE	QUANTITY
1	Tie-Rod, 4.00 dia x 77.060 in. steel pipe with adjustable clevis	2
2	Bolt, 0.50 in. dia	2
3	Nut, 0.50 in.	2
4	Support, 1.92 x 6.00 x 96.00 in. steel channel	2
5	Cradle, 1.00 x 36.00 x 84.00 in. plywood	8
6	Brace, 0.25 x 2.50 x 9.00 in. steel	8
7	Bolt, 0.25 in. dia	54
8	Nut, 0.25 in.	54
9	Cross-Brace, 1.00 x 1.00 x 48.00 in. steel angle	4
10	Alighting Gear Fitting Attachment, 1.75 x 4.00 x 4.50 in. steel	4
11	Bolt, 0.75 in. dia	8
12	Nut, 0.75 in.	8
13	Support, 2.00 x 8.00 x 34.50 steel channel	2
14	Tie-Rod Clip, 0.50 x 2.50 x 4.00 in. steel	2
15	Caster Assembly* and Worm Gear Extension	2
16	Caster Mount	2
17	Bolt, 0.25 in. dia	4
18	Nut, 0.25 in.	4
19	Padding, 0.50 x 8.00 x 170.00 in. felt	As Reqd
20	Nail	As Reqd

*Capable of withstanding a 1500 lb load

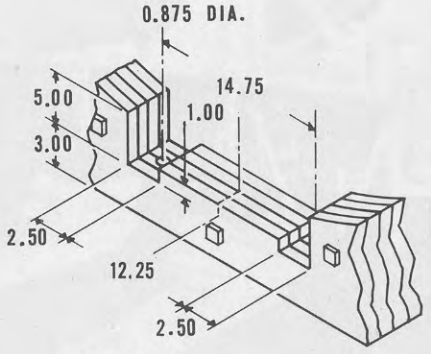

DETAIL A

DETAIL B

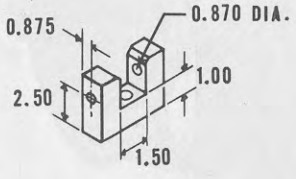

DETAIL C

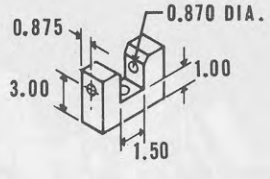

Figure 2-35J. Main Gear Dolly Fabrication (Sheet 1 of 2)

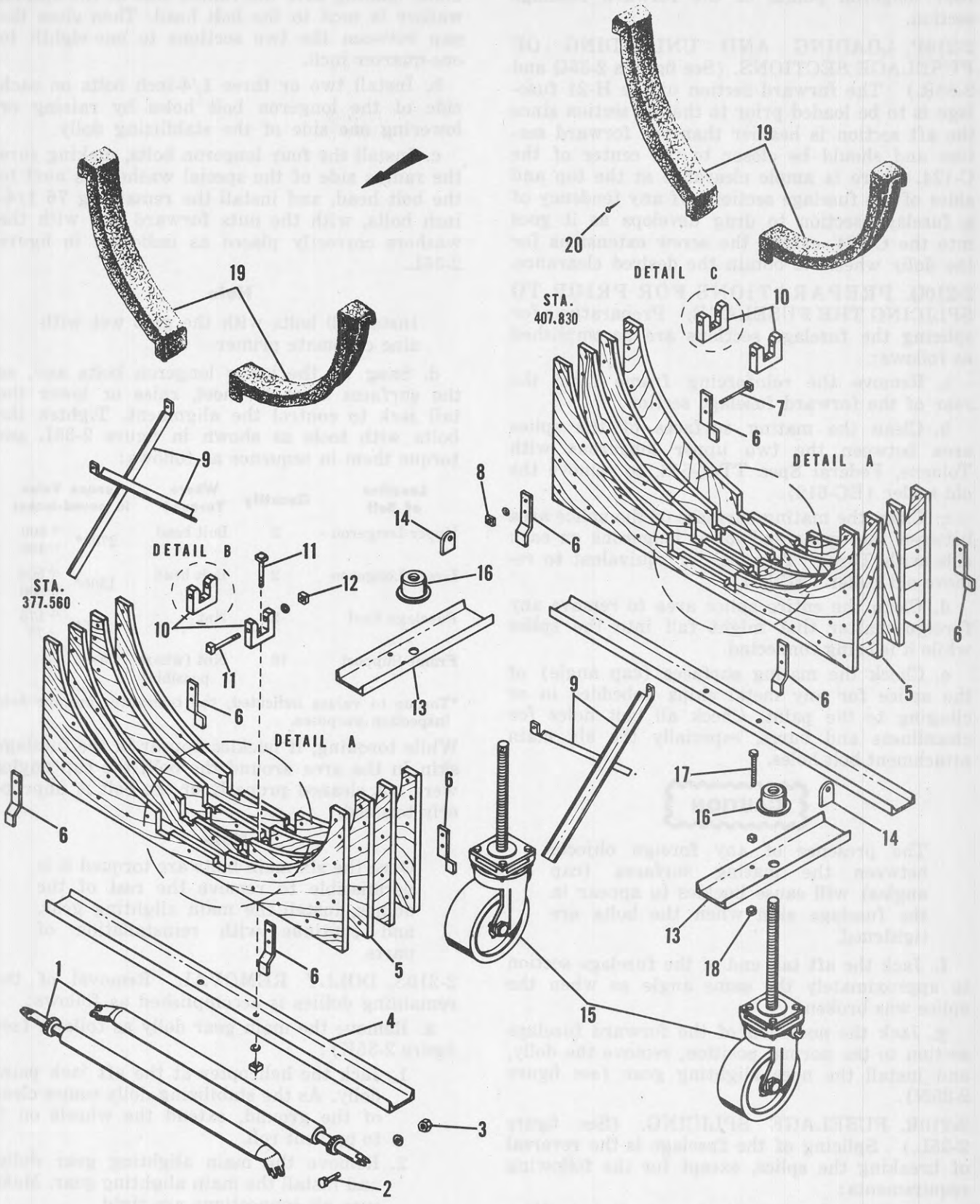

Figure 2-35J. Main Gear Dolly Fabrication (Sheet 2 of 2)

four longeron points of the forward fuselage section.

2-210P. LOADING AND UNLOADING OF FUSELAGE SECTIONS. (See figures 2-35Q and 2-35R.) The forward section of the H-21 fuselage is to be loaded prior to the aft section since the aft section is heavier than the forward section and should be closer to the center of the C-124. There is ample clearance at the top and sides of the fuselage sections. If any tendency of a fuselage section to drag develops as it goes into the C-124, extend the screw extensions for the dolly wheels to obtain the desired clearance.

2-210Q. PREPARATIONS FOR PRIOR TO SPLICING THE FUSELAGE. Preparations for splicing the fuselage sections are accomplished as follows:

a. Remove the reinforcing frame from the rear of the forward fuselage section.

b. Clean the mating surfaces of the splice area between the two upper longerons with Toluene, Federal Spec TT-T-548, to remove the old sealer (EC-612).

c. Clean the mating surfaces of the splice area between the upper and lower longerons on each side with Turco "Transpo" or equivalent to remove old sealer (EC-801).

d. Clean the entire splice area to remove any foreign matter that might fall into the splice while it is being connected.

e. Check the mating surfaces (cap angle) of the splice for any metal chips imbedded in or clinging to the paint. Check all bolt holes for cleanliness and burrs, especially the six main attachment bolt holes.

CAUTION

The presence of any foreign objects between the mating surfaces (cap angles) will cause buckles to appear in the fuselage skin when the bolts are tightened.

f. Jack the aft tail end of the fuselage section to approximately the same angle as when the splice was broken.

g. Jack the nose end of the forward fuselage section to the normal position, remove the dolly, and install the nose alighting gear (see figure 2-35N).

2-210R. FUSELAGE SPLICING. (See figure 2-35L.) Splicing of the fuselage is the reversal of breaking the splice, except for the following requirements:

a. Line up the two fuselage sections with a gap of one-half to one inch between them and, by raising or lowering the height of the tail jack and stabilizing dolly, insert and start the two keel bolts, making sure the radius side of the special washer is next to the bolt head. Then close the gap between the two sections to one-eighth to one-quarter inch.

b. Install two or three 1/4-inch bolts on each side of the longeron bolt holes by raising or lowering one side of the stabilizing dolly.

c. Install the four longeron bolts, making sure the radius side of the special washers is next to the bolt head, and install the remaining 76 1/4-inch bolts, with the nuts forward and with the washers correctly placed as indicated in figure 2-35L.

Note

Install all bolts with the grip wet with zinc chromate primer.

d. Snug up the lower longeron bolts and, as the surfaces start to meet, raise or lower the tail jack to control the alignment. Tighten the bolts with tools as shown in figure 2-35L and torque them in sequence as follows:

Location of Bolt	Quantity	Where Torqued	Torque Value in pound-inches
Upper Longeron	2	Bolt head	2700* $^{+800}_{-400}$
Lower Longeron	2	Bolt head	1300* $^{+500}_{-200}$
Fuselage Keel	2	Nut	525* $^{+175}_{-75}$
Frame Support	76	Nut (where possible)	75–85

*Torque to values indicated; the tolerances are for field inspection purposes.

While torquing, if buckles appear in the fuselage skin in the area around the bolt, the cap angles were not cleaned properly or the bolt is improperly torqued.

Note

Once the six main bolts are torqued it is permissible to remove the rest of the dollies, install the main alighting gear, and continue with reinstallation of parts.

2-210S. DOLLY REMOVAL. Removal of the remaining dollies is accomplished as follows:

a. Remove the main gear dolly as follows (see figure 2-35K):

1. Jack the helicopter at the aft jack point dolly. As the stabilizing dolly comes clear of the ground, extend the wheels on it to prevent roll.
2. Remove the main alighting gear dolly, and install the main alighting gear. Make sure all connections are tight.
3. Lower the helicopter to the ground on the main gear while raising the wheels on the stabilizing dolly.

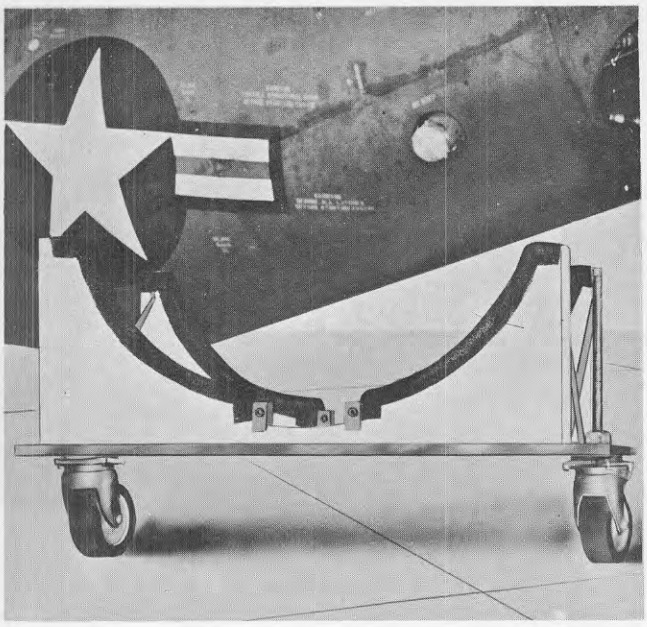

Figure 2-35K. Main Gear Dolly Installation

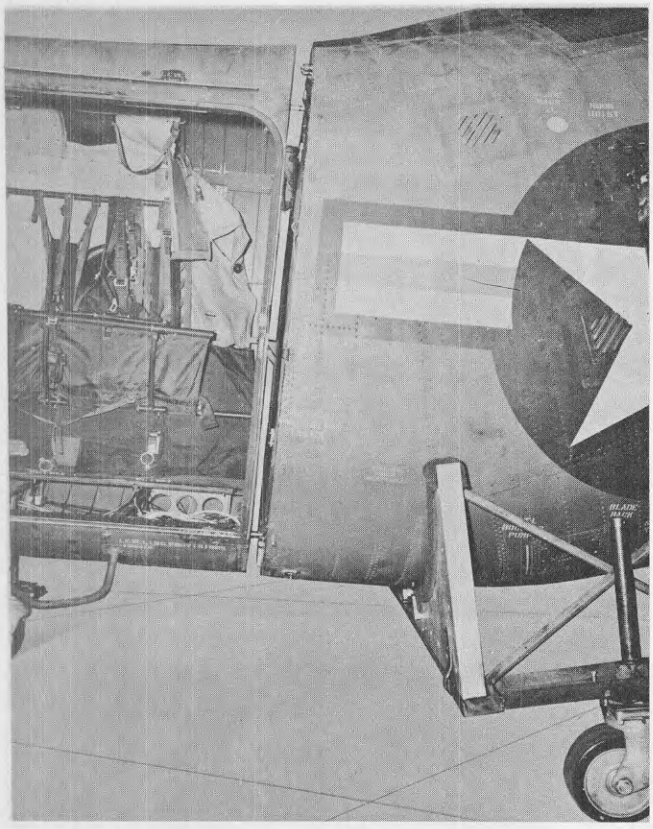

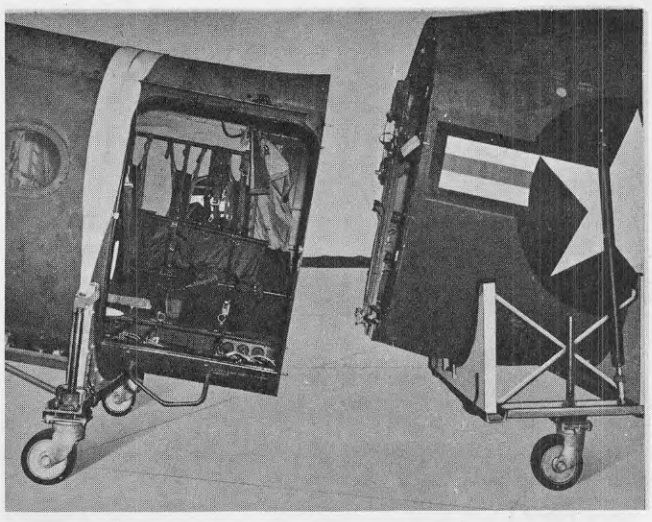

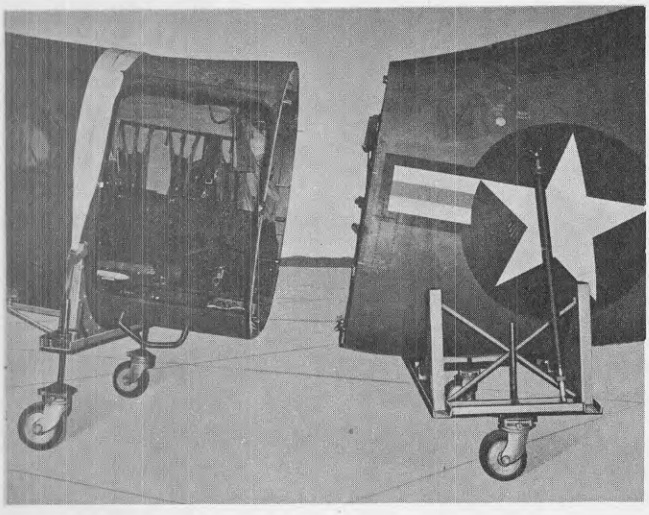

NOMENCLATURE KEY FOR SHEET 2

1 Internal Wrenching Bolt
Countersunk Washer (one under bolt hd)
Plain Washer (two under nut)
Nut

2 Internal Wrenching Bolt
Countersunk Washer (one under bolt hd)
Barrel Nut (lower right longeron)
Special Barrel Nut* (lower left longeron)

3 Internal Wrenching Bolt
Countersunk Washer
Barrel Nut

4 Bolt (AN4-6A)
Thin Washer (one under bolt hd)
Plain Washer (one under nut)
Nut

5 Bolt (AN4-7A)
Plain Washer (one under bolt hd and one under nut)
Nut

6 Bolt (AN4-7A)
Thin Washer (one under bolt hd)
Plain Washer (one under nut)
Nut

7 Hex Bar Stock (heat treated)
5/8-inch for upper longerons
9/16-inch for lower longerons

8 Allen Wrench, 3/8-inch

*When installed the angled corner is to be in upper outboard position

Figure 2-35L. Separating Fuselage Sections (Sheet 1 of 2)

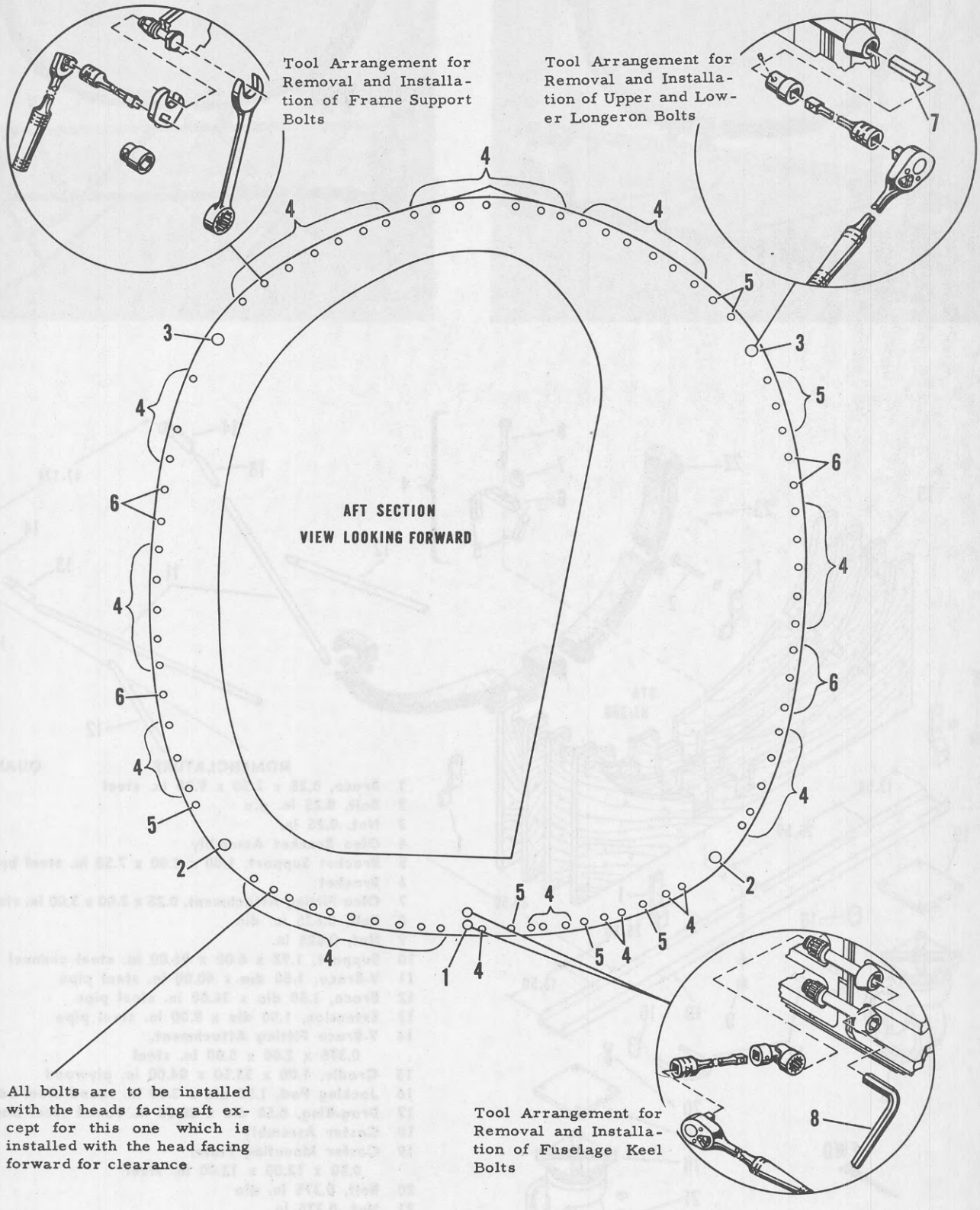

Figure 2-35L. Separating Fuselage Sections (Sheet 2 of 2)

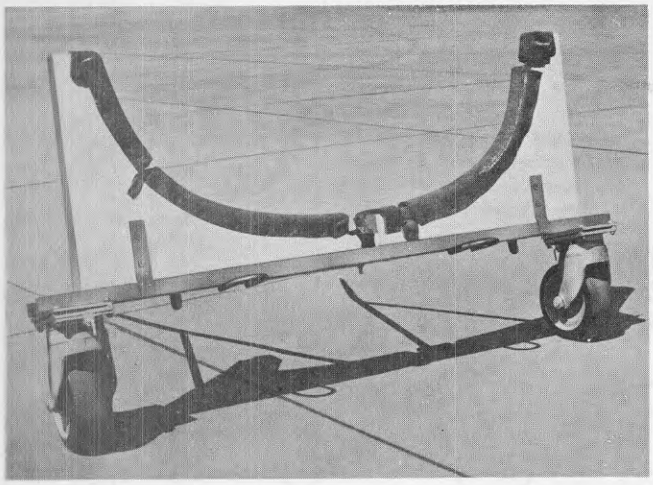

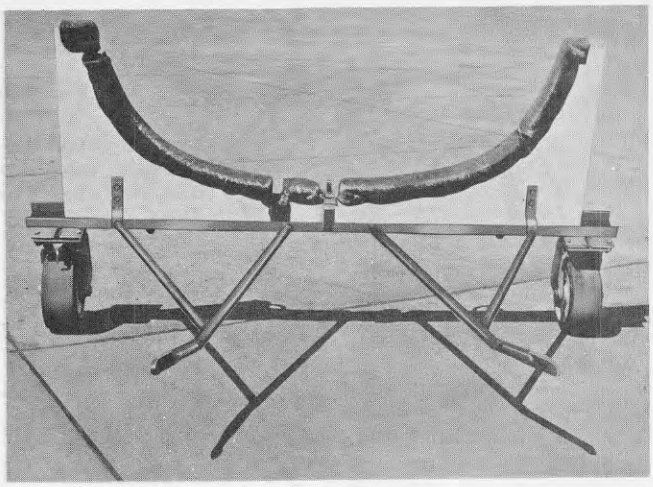

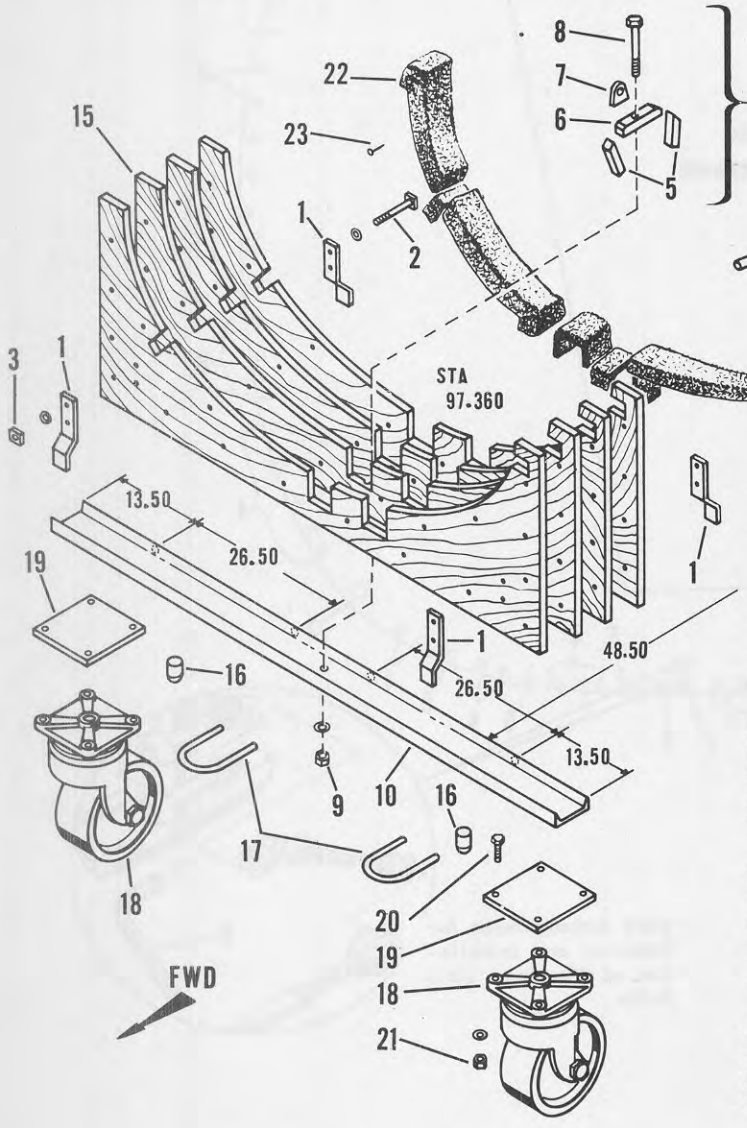

	NOMENCLATURE	QUANTITY
1	Brace, 0.25 x 2.50 x 9.00 in. steel	4
2	Bolt, 0.25 in. dia	22
3	Nut, 0.25 in.	22
4	Oleo Bracket Assembly	1
5	Bracket Support, 1.00 x 2.00 x 7.50 in. steel bar	2
6	Bracket	1
7	Oleo Fitting Attachment, 0.25 x 3.00 x 3.00 in. steel	1
8	Bolt, 0.625 in. dia	1
9	Nut, 0.625 in.	1
10	Support, 1.92 x 6.00 x 96.00 in. steel channel	1
11	V-Brace, 1.50 dia x 40.00 in. steel pipe	2
12	Brace, 1.50 dia x 36.00 in. steel pipe	2
13	Extension, 1.50 dia x 8.00 in. steel pipe	2
14	V-Brace Fitting Attachment, 0.375 x 2.00 x 5.00 in. steel	2
15	Cradle, 1.00 x 33.50 x 84.00 in. plywood	4
16	Jacking Pad, 1.50 dia x 3.00 in. round steel bar	2
17	Drag-Ring, 0.50 dia x 28.00 in. round steel bar	2
18	Caster Assembly	2
19	Caster Mounting Plate, 0.50 x 12.00 x 12.00 in. steel	2
20	Bolt, 0.375 in. dia	8
21	Nut, 0.375 in.	8
22	Padding, 0.50 x 8.00 x 100.00 in. felt	As Reqd
23	Nail	As Reqd

Figure 2-35M. Nose Gear Dolly Fabrication

Step 1. Installation of the Small Jacks

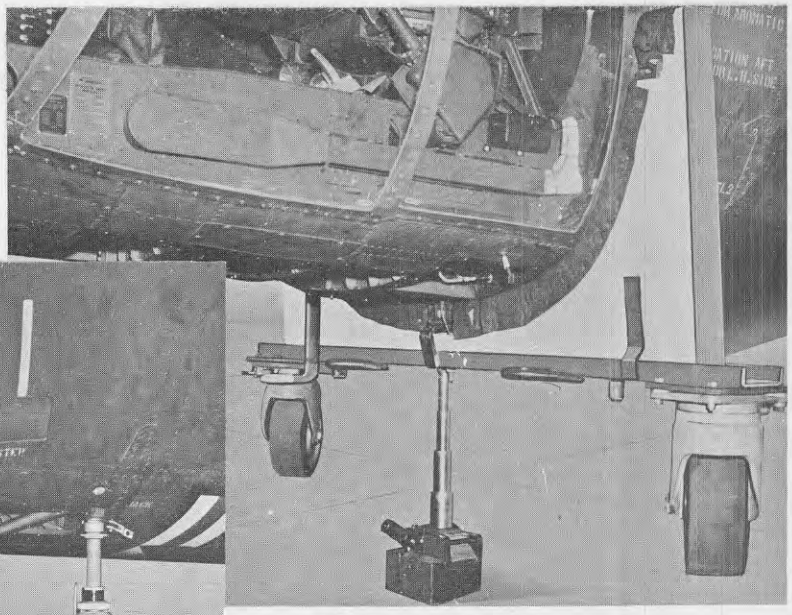

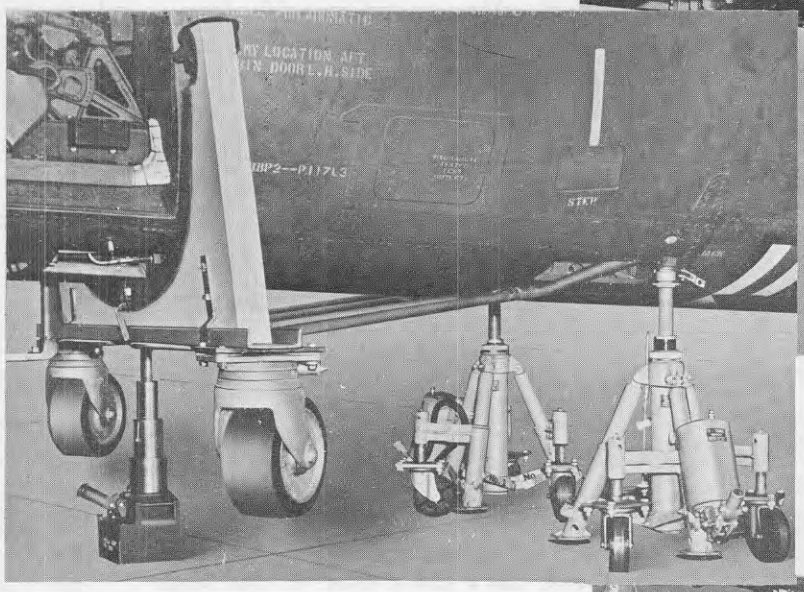

Step 2. Raising the Dolly

Step 3. Installation of the Large Jacks

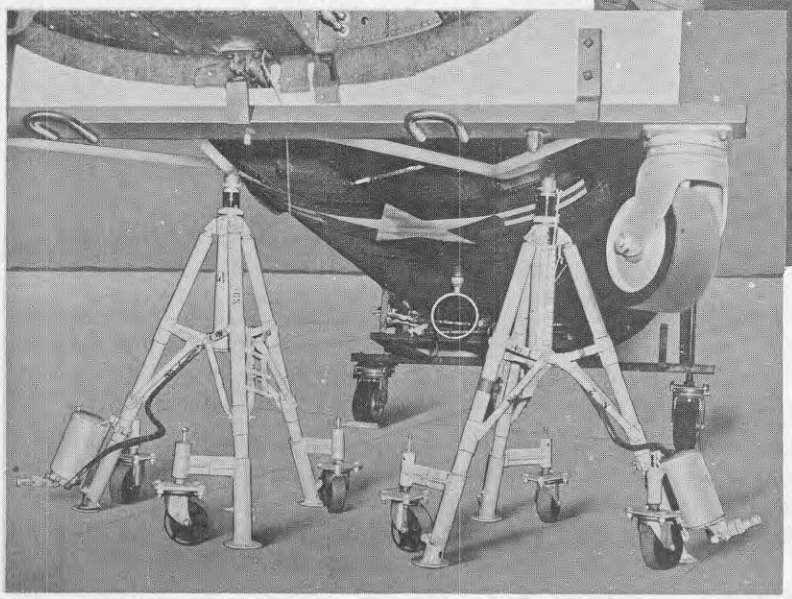

Step 4. Installation of the Nose Gear

Figure 2-35N. Nose Gear Dolly Installation

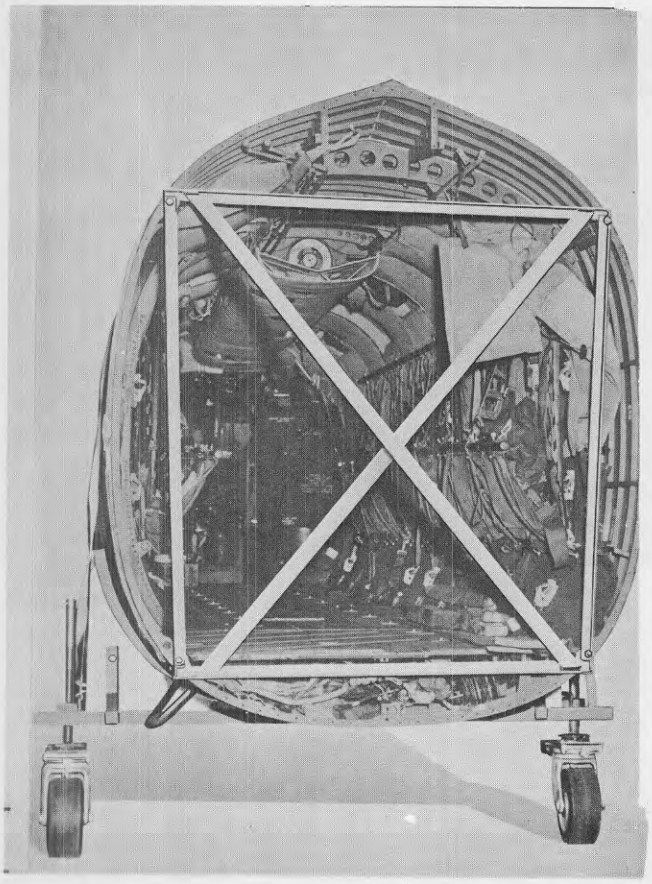

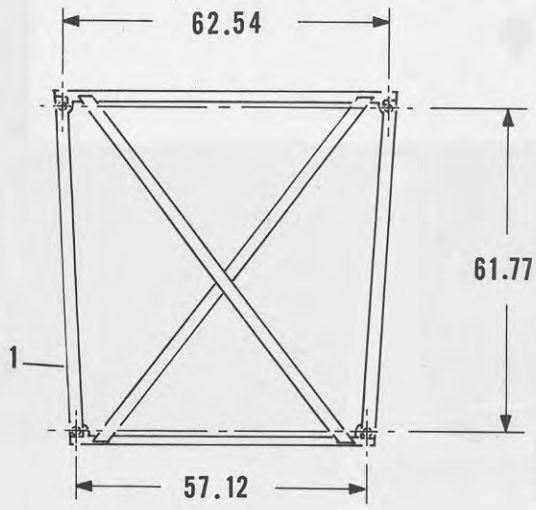

NOMENCLATURE	QUANTITY
1 Frame, 1.50 x 1.50 x 420.00 in. steel angle	1

Figure 2-35P. Fuselage Splice Reinforcing Frame

b. Remove the aft jack point dolly as follows (see figure 2-35H) :

1. Disconnect the cable extending to the main alighting gear dolly.
2. Support the dolly with jacks or by personnel, remove the straps and the attaching bolt from the jack point, and lower the dolly to the ground.
3. Reinstall the aft jack point.

c. Remove the stabilizing dolly as follows (see figure 2-35F) :

1. Remove the straps and disconnect the dolly from the bomb rack.
2. Retract the dolly wheels to clear the fuselage, and roll the dolly free of the helicopter.
3. Install the bomb rack bolts.

2-210T. INSTALLATION OF EQUIPMENT IN THE SPLICE AREA. The equipment removed in preparation to break the splice (refer to paragraph 2-210M) must be reinstalled and checked for functional operation. Additional items to be accomplished are as follows:

a. Waterproof the splice joint on top of the fuselage between the two upper longerons by filling the space with sealer, EC-612, thinned as required with Toluene, Federal Spec TT-T-584.

b. Waterproof the splice joint between the upper and lower longerons by filling the space with sealer, EC-801, thinned as required with Toluene, Federal Spec TT-T-584.

Note

When the specified sealer is not available, EC-612 or EC-801 may be substituted, one for the other. If neither is available, EC-1120 may be used, but the splice area must be watched for water seepage since, in time, the EC-1120 sealer will harden and crack.

c. The electrical connection for the emergency fluids cut-off switch at the splice must be checked to make sure it is not hooked up backwards.

d. After the cables are connected and lockwired, read the cable tension of each cable and match this reading with the reading recorded for the particular cable before the splice was broken (refer to paragraph 2-210M. n.). The readings will vary but should approximate the original, recorded readings.

WARNING

If a wide divergency of readings occurs, the entire system must be traced to resolve the cause. Check for: Cable snagged on a projecting part, cable slipped off a pulley, deflected or damaged pulley bracket.

2-211. TAIL SURFACES.

2-212. GENERAL. (See figure 2-36.) The fiber glass covered tail is considered an integral part of the fuselage structure and is attached permanently to the aft end of the fuselage. Removable cowling is provided at the top of the fuselage tail section for access to the transmission and rotor controls located there. The horizontal stabilizer is composed of two sections which are attached to each side of the fuselage structure at two

Figure 2-35Q. Forward Fuselage Section Prepared for Loading

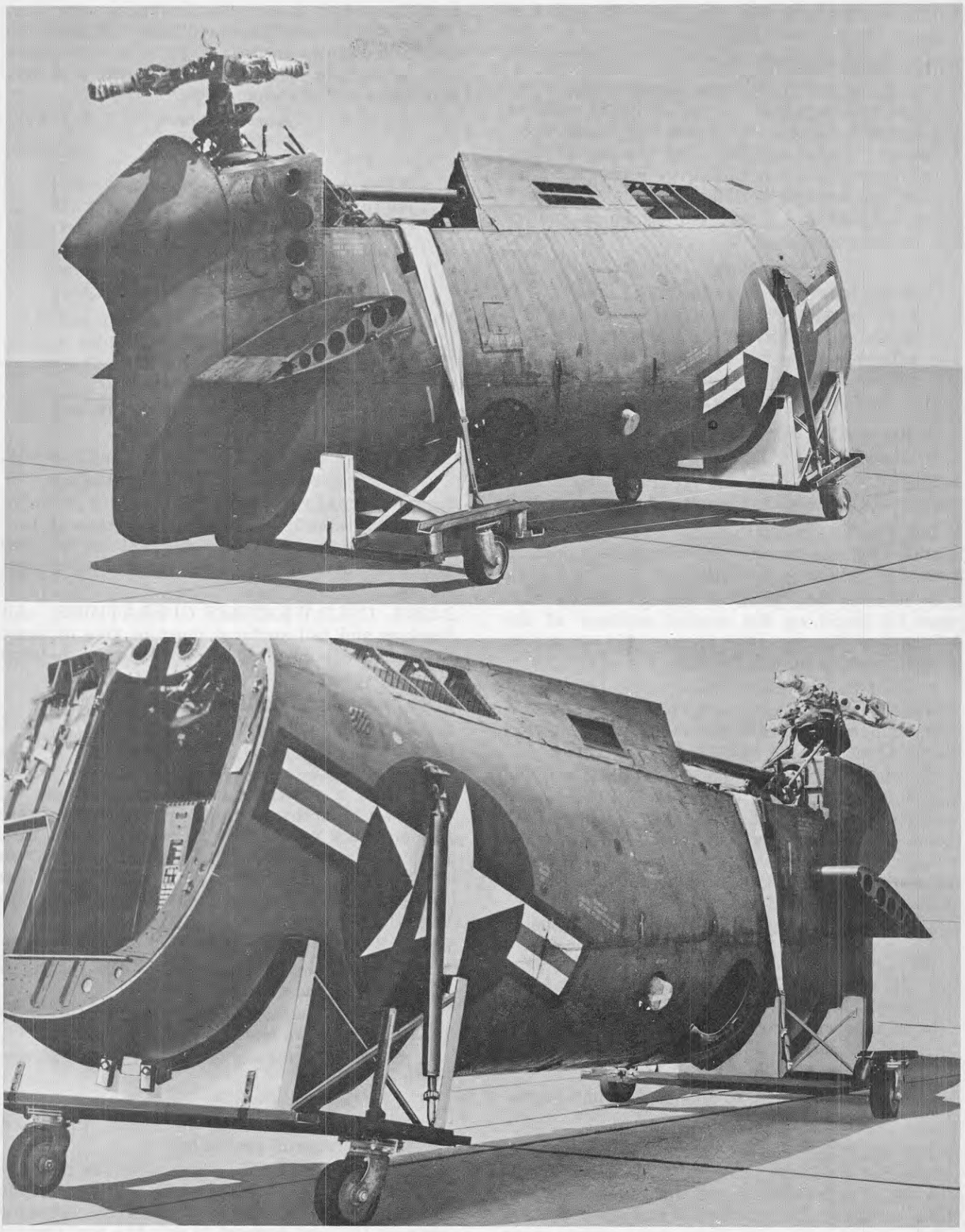

Figure 2-35R. Aft Fuselage Section Prepared for Loading

points. Vertical fins are attached to the outboard ends of the horizontal stabilizer.

2-213. VERTICAL FINS.

2-214. DESCRIPTION. (See figure 2-36.) The vertical fins, attached to the outboard ends of the horizontal stabilizer, provide improved directional and lateral stability. The fins are of light alloy, riveted construction with Fiberglas fairings at the top and bottom. For dimensions and areas, see Section I. Right and left fin assemblies are interchangeable.

Note

If the helicopter is grounded because of a damaged vertical fin and a replacement fin is not available, it can be flown after removing the damaged fin and the opposite undamaged fin.

2-215. REMOVAL. (See figure 2-36.)

a. Remove the two nuts (12) from fittings (13).

b. Remove nut (1) from bolt (3).

c. Pull the vertical fin from the horizontal stabilizer and lower to the ground.

2-216. INSTALLATION. (See figure 2-36.) To install the fin, reverse the removal procedure with the following precautions:

a. Remove any paint or foreign matter that may be found on the conical surfaces of the attachment fittings (10, 11, and 13) to assure proper seating of the fittings.

b. Coat the conical surfaces of the attachment fittings with anti-seize compound, Spec JAN-A-669, being careful not to get any of the compound on the threads of the fittings.

c. When the vertical fin (9) is installed, the gap between the skin of the fin and the upper and lower edge of the horizontal stabilizer (14) must not be less than 0.10 inch. If no clearance exists, the fin must be removed and the edges of the horizontal stabilizer trimmed until the desired clearance is obtained.

d. Torque the nut (1) to 75–85 pound-inches.

Note

To make sure that the nut (1) is not bottoming on the bolt (3), add washers as necessary, until a minimum of two and a maximum of four threads are exposed above the nut.

Torque the nuts (12) to 800–1000 pound-inches.

2-217. HORIZONTAL STABILIZER.

2-218. DESCRIPTION. (See figure 2-36.) The horizontal stabilizer projects from either side of the top of the fuselage just forward of the tail cone assembly. The horizontal stabilizer consists of two units, the stabilizer stub, which is an integral part of the fuselage, and the removable stabilizer which is a riveted light alloy structure. The stabilizer provides additional longitudinal stability when in forward flight. For dimensions and areas, see Section I. The right and left stabilizers are interchangeable.

CAUTION

When performing maintenance which requires walking on the horizontal stabilizer, all walking is limited to the area of the stabilizer stub. Do not step on the beaded skin of the removable stabilizer section as it will not support weight.

If a horizontal stabilizer is damaged and a replacement is not available, the helicopter may be flown with both stabilizers and fins removed.

2-219. REMOVAL. (See figure 2-36.)

a. Remove nuts (18), washers (16 and 17), and bolts (15) from the fitting (19).

b. Remove nut (7), washers (6) and bolt (5).

c. Lower the stabilizer from the fuselage.

2-220. INSTALLATION. (See figure 2-36.) To install the stabilizer, reverse the removal procedure. Torque the two nuts (18) to 270–300 pound-inches and the nut (7) to 45–50 pound-inches.

2-220A. COLD WEATHER OPERATIONS. All fuselage and tail surfaces must be free of snow and ice. Brush off all loose snow and use de-icing fluid for removal of ice where necessary.

2-221. FUSELAGE EQUIPMENT.

2-222. SEATS—PILOT AND CO-PILOT.

2-223. DESCRIPTION. (See figure 2-37.) The pilot and co-pilot seats are bucket-shaped to permit use of a parachute or cushion. They are set side-by-side in the cockpit compartment and are torsion shock mounted to increase pilot comfort. Each seat has a five-inch range of travel from low to high. It may be secured in any one of seven positions. The adjustment handle is attached to the left side of the seat.

2-224. REMOVAL. (See figure 2-37.)

a. Remove the bolts which attach the arms (3 and 19) to the seat.

b. Remove the bolts which attach the links (15 and 26) to the seat.

c. Remove the attaching pin of the seat adjustment unit.

d. Lift the seat from the cockpit.

2-225. INSTALLATION. To install the seats, reverse the removal procedure.

2-226. ADJUSTMENT. "Creeping" in the rubber spring may be corrected as follows: Loosen the attaching bolt and reposition the serrated plate on the seat support to pull the seat against the stop.

1 Nut
2 Fitting
3 Bolt
4 Fitting
5 Bolt
6 Washer
7 Nut
8 Fitting
9 Vertical Stabilizer
10 Fitting
11 Fitting
12 Nut
13 Fitting
14 Horizontal Stabilizer
15 Bolt
16 Washer
17 Washer
18 Nut
19 Fitting

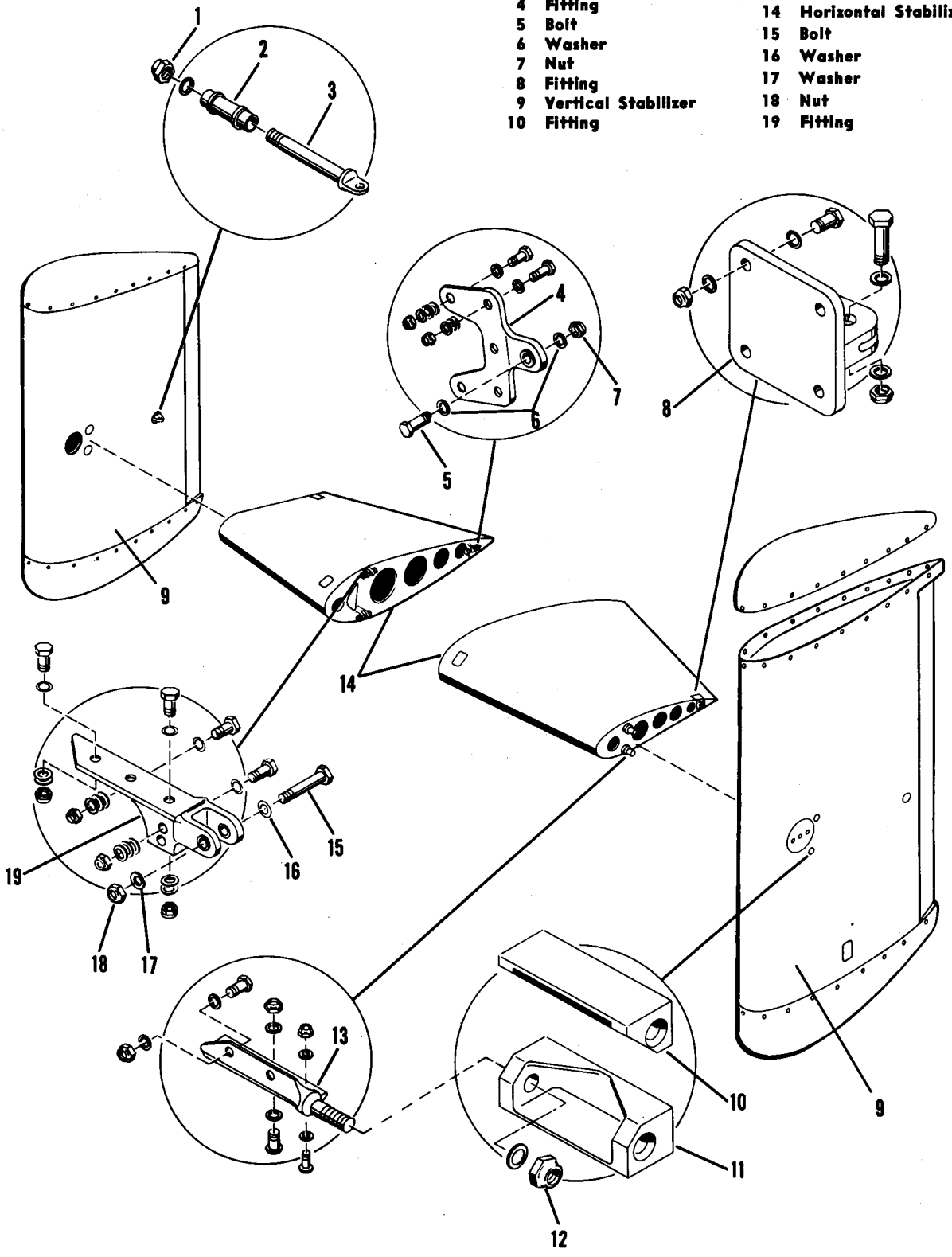

Figure 2-36. Tail Assembly

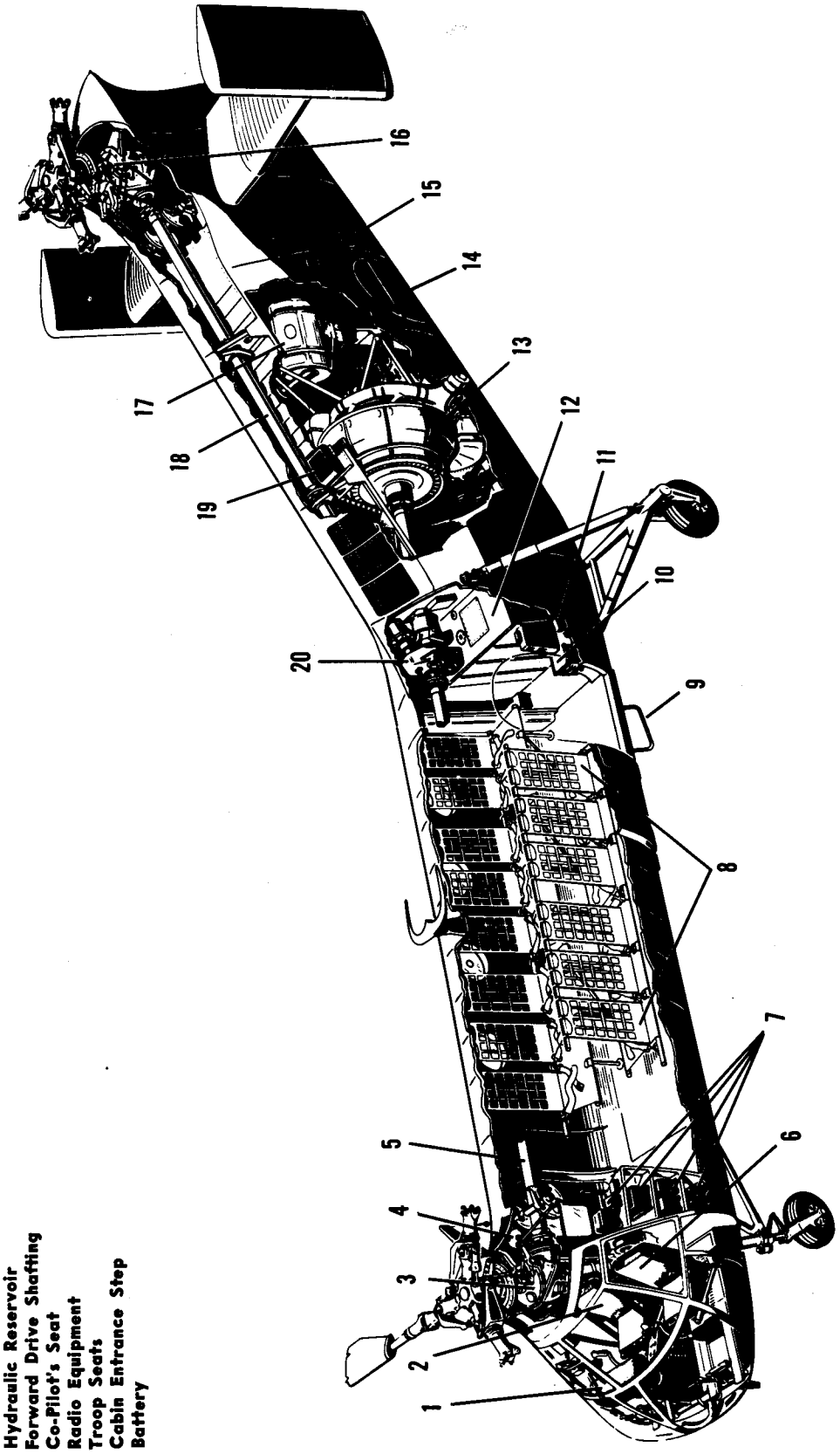

Figure 2-36A. Interior Arrangement of the YH-21 and H-21A

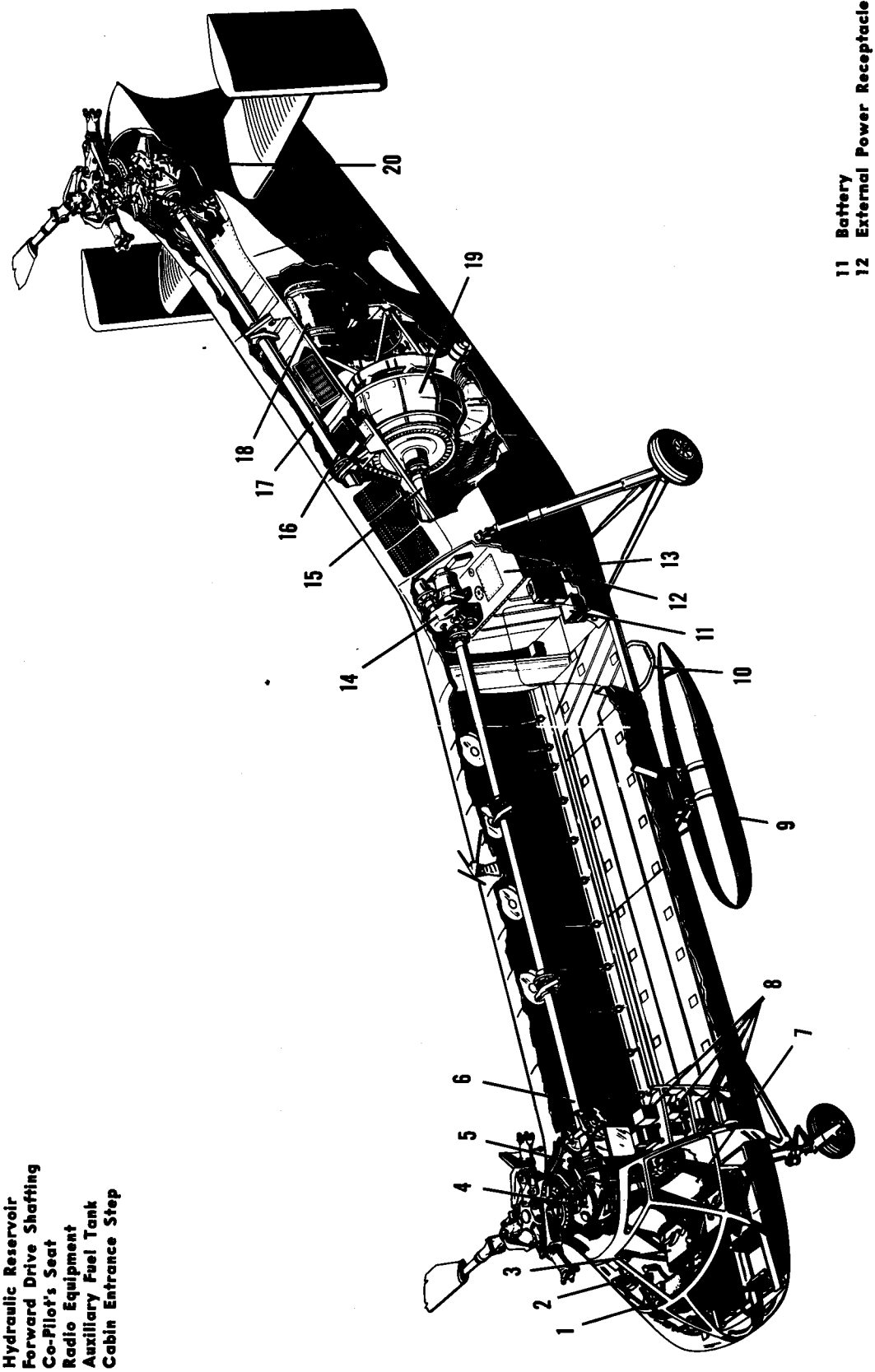

Figure 2-36B. Interior Arrangement of the H-21B and H-21C

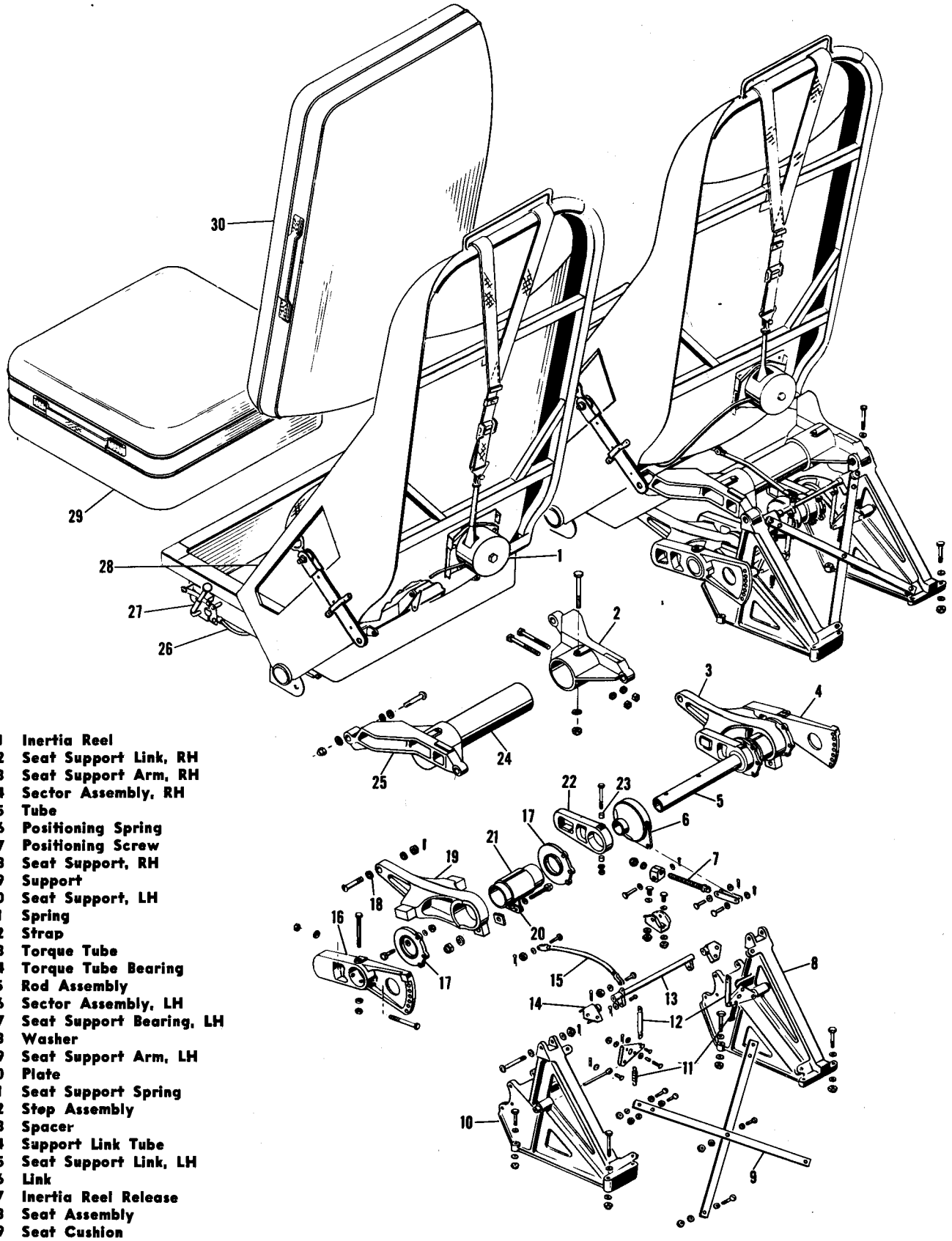

1 Inertia Reel
2 Seat Support Link, RH
3 Seat Support Arm, RH
4 Sector Assembly, RH
5 Tube
6 Positioning Spring
7 Positioning Screw
8 Seat Support, RH
9 Support
10 Seat Support, LH
11 Spring
12 Strap
13 Torque Tube
14 Torque Tube Bearing
15 Rod Assembly
16 Sector Assembly, LH
17 Seat Support Bearing, LH
18 Washer
19 Seat Support Arm, LH
20 Plate
21 Seat Support Spring
22 Step Assembly
23 Spacer
24 Support Link Tube
25 Seat Support Link, LH
26 Link
27 Inertia Reel Release
28 Seat Assembly
29 Seat Cushion
30 Back Cushion

Figure 2-37. Pilot and Co-Pilot Seats

2-227. TROOP SEATS AND LITTERS.

2-228. GENERAL. (See figure 2-38.) Five different seating arrangements are possible in the helicopter. They are as follows:

Capacity	Litter Tiers (3-man)	Seats (2-man)	Seats (3-man)	Model
20 men..	0	1	6	H-21B & H-21C
14 men..	0	1	4	YH-21 & H-21A
17 men..	1	1	4	H-21B & H-21C
14 men..	1	1	3	YH-21 & H-21A
*17 men..	2	1	3	H-21B & H-21C
14 men..	2	1	2	YH-21 & H-21A
14 men..	3	1	1	ALL
14 men..	4	1	0	H-21B & H-21C
12 men..	4	0	0	YH-21 & H-21A

* To accomplish this loading, both litter tiers must be installed on the one side of the compartment and the seats on the opposite side; otherwise, only 14 men can be carried.

2-229. TROOP SEATS.

2-230. DESCRIPTION. (See figure 2-38.) The two- and three-man troop seats are similar in construction and attachment to the fuselage structure. The seats are constructed of cloth webbing and straps and are supported by aluminum alloy tubing. They may be stowed to provide more open floor space or removed to provide space for litter installation.

2-231. SEAT STOWING. The troop seats may be stowed as follows:

a. Unsnap the vertical supporting tubes from the tie-down pad buttons.

b. Place the supporting tubes parallel to the outer edge of the seat.

c. Disconnect the tubes which hold the seat in the extended position.

d. Roll the seat up against the fuselage structure and fasten with the straps provided.

2-232. REMOVAL. Remove the troop seats as follows:

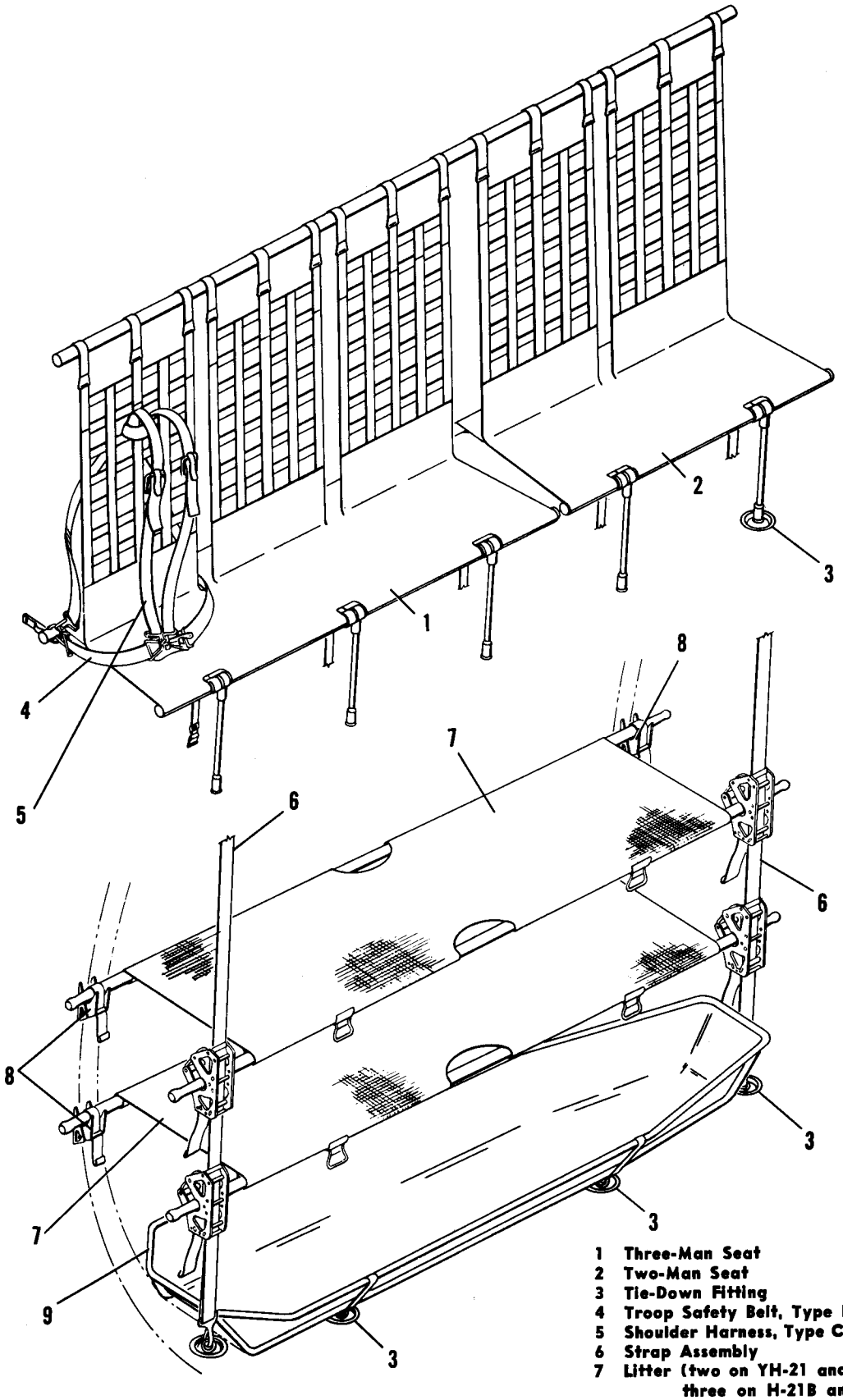

1 Three-Man Seat
2 Two-Man Seat
3 Tie-Down Fitting
4 Troop Safety Belt, Type D-2
5 Shoulder Harness, Type C-3
6 Strap Assembly
7 Litter (two on YH-21 and H-21A, three on H-21B and H-21C)
8 Bracket
9 Stokes Litter (YH-21 and H-21A only)

Figure 2-38. Troop Seat and Litter Installations

a. Unsnap the vertical supports from the tie-down pad buttons, slacken the back rest straps, and detach from the upper support tube.

b. Remove the retaining bolts from the lower attaching tube and remove the seat.

2-233. INSTALLATION. To install the troop seats, reverse the removal procedure.

2-233A. ADJUSTMENT. When adjusting the backstraps, the fittings must be spread slightly to allow the fittings to rotate on the support tube freely. Enabling the fittings to rotate freely permits the fittings to assume the correct angle for proper restraint.

2-234. LITTERS.

2-235. DESCRIPTION. (See figure 2-38.) The litter assemblies are arranged in tiers of three when installed in the helicopter. The upper two litters are the folding canvas type, supported by two aluminum tubes. The lower litter may be identical with the upper two or may be a Stokes litter. Each tier is supported by straps attached to fittings provided on the fuselage structure.

2-236. REMOVAL. Remove the litters and litter straps as follows:

a. On the YH-21 helicopters, slide the litter handles from the loops in the straps and remove the litters. On the H-21A, H-21B and H-21C helicopters, lift the litters from the dog clamp and remove the litters.

b. Detach the supporting straps from the tie-down rings, coil them, and place in the containers provided.

2-237. INSTALLATION. To install the litters, reverse the removal procedure.

2-238. CUSHIONS.

2-239. DESCRIPTION. (See figure 2-37.) The pilot and co-pilot seats are equipped with seat and back cushions (29 and 30). The cushions are constructed of a sponge rubber facing and a Kapok filler. The front or top and the sides of each cushion cover is made of Naughahyde (olive drab artificial leather) and the bottom or back is made of water- and mildew-proofed cotton webbing.

2-240. SAFETY BELTS.

2-241. PILOT AND CO-PILOT BELTS. (See figure 2-37.) The pilot and co-pilot seats are equipped with safety belts and shoulder harnesses for protection of pilot personnel. The safety belt is adjusted by lengthening or shortening the adjustable section on the belt. The shoulder harness is adjusted by pulling up on the webbing to shorten the straps and lengthened by weaving the webbing back through the buckle. An inertia reel is provided to permit the pilot or co-pilot to lean forward when the reel is unlocked. The safety belt and shoulder harness are removed by removing the bolts which attach them to the seat.

2-242. TROOP BELTS. (See figure 2-38.) Troop seats are equipped with safety belts and shoulder harnesses. Both the belts and shoulder harnesses are removed by detaching the connecting straps at the fittings on the fuselage structure.

2-243. CARGO AND HOIST OPERATOR'S BELT. The cargo and hoist operator's safety belt used on the YH-21 helicopters consists of a gunner's safety belt and cable assembly. The cable assembly has a snap type hook on one end which may be attached to restraining brackets mounted on the upper longerons opposite the cargo door and the rescue door. The safety belt used on the H-21A, H-21B and H-21C helicopters is of the jacket type with straps passing over the shoulders and around the waist. The restraining cable is replaced by nylon belting. These belts allow personnel to stand at either the rescue door or the cargo door without danger of falling from the helicopter while in flight.

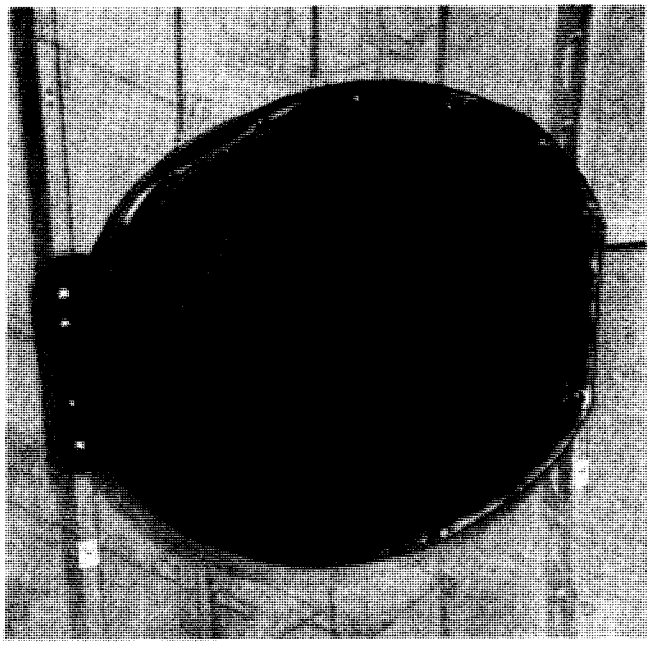

Figure 2-39. Blackout Curtains

2-244. BLACKOUT CURTAINS.

2-245. DESCRIPTION. (See figure 2-39.) Nine curtains are provided to black out the doors and windows. Seven of these curtains fit over the cabin windows. The other two fit the main cabin and rescue doors. The curtains are made of a steel spring wire frame and a cloth cover.

2-246. REMOVAL. Remove the door curtains by unsnapping the two fasteners located in the middle of the curtain and fold in half for storage. Remove the window curtains by unsnapping the fasteners and removing the curtain.

2-247. INSTALLATION. To install the curtains, reverse the removal procedure.

2-248. COCKPIT ANTI-GLARE CURTAIN.

2-249. DESCRIPTION. (See figure 2-40.) The cockpit anti-glare curtain is attached to the forward side of the canted bulkhead and covers the entrance to the cockpit. The curtain is attached to the bulkhead with snap fasteners. A slide fastener is provided to facilitate entrance to the cockpit. The curtain may be removed by freeing the snap fasteners.

Note

If difficulty is encountered in opening the slide fastener, a leather lanyard approximately 14 inches in length may be tied to the tang of the fastener.

2-250. MAP AND DATA CASES.

2-251. DESCRIPTION. Map and data cases are located on the canted bulkhead behind the pilot and co-pilot seats.

2-252. CABIN INSULATION.

2-253. DESCRIPTION. Insulation is glued to the cabin ducting and the forward transmission drip pan. An insulation curtain is installed in the opening in the bulkhead just forward of the fuel tank. This curtain must be in place when ground heating the helicopter. The curtain seals off the area around the central transmission and prevents heat from escaping into the cabin area. Cabin insulation is completed by panels which are snap-fastened along the fuselage sides.

2-254. RELIEF TUBES.

2-255. DESCRIPTION. Two relief tubes are located in the cockpit. One inlet is located under the pilot's seat on the floor. The other is located behind the co-pilot's seat, accessible to both the co-pilot and passengers in the cabin.

2-255A. CLEANING. The relief tubes must be cleaned quite often with disinfectant solution and the interior and exterior area adjacent to the relief tubes neutralized. Spray the area adjacent to the relief tube outlet periodically with clear lacquer.

2-255B. RESCUE DOOR LADDER.

2-255C. DESCRIPTION. A four-step ladder is provided on YH-21[27] and H-21A[28] helicopters to facilitate entrance of personnel through the rescue door. The ladder hooks into slots in the cabin floor just inside the rescue door and braces against the fuselage. When not in use, the ladder may be stowed inside the cabin.

2-255D. AUXILIARY POWER UNIT.

2-255E. DESCRIPTION. A gasoline-powered generating unit is located on the floor of YH-21[27] and H-21A[28] helicopters. This unit is found on the left side of the fuselage just behind the radio shelf. A cable and plug assembly capable of reaching the external power receptacle is provided with the auxiliary power unit.

2-256. EMERGENCY EQUIPMENT.

2-257. FIRE EXTINGUISHERS. Two fire extinguishers are installed in the helicopter. One is located on the forward side of the canted bulkhead behind the pilot's seat. The other is located on the forward side of the first bulkhead forward of the fuel cell.

2-258. FIRST AID KITS. Three first aid kits are installed in the helicopter. Two are located in the cabin area, one on each side of the heating duct in the ceiling. The third kit is located in the cockpit on the canted bulkhead.

2-259. LIFE RAFT. A life raft may be stowed longitudinally under the troop seats located between stations 139.50 and 159.50. If litters are installed, the life raft may be stowed laterally just forward of the bulkhead at the aft end of the cabin. The preferred location under the troop seat utilizes one tie-down pad and two special fittings which are provided for securing the raft. The alternate position utilizes two tie-down pads and one special fitting for securing the raft.

Figure 2-40. Antiglare Curtain

[27] Ser No. 50-1238 thru 50-1248.

[28] Ser No. 51-15238 thru 51-15257.

2-260. ASH TRAYS. On H-21A, H-21B and H-21C helicopters, ash trays are provided for the convenience of the pilot and co-pilot. These ash trays are mounted on the nose enclosure structure on the outboard side of the pilot and co-pilot seats. To remove the ash tray for cleaning, turn the container one-quarter turn to the left and lift from the mounting plate.

2-261. FLY-AWAY EQUIPMENT. The following listed items should accompany the helicopter or be available for all missions:

Note

The list of fly-away equipment is subject to change depending on the operational assignment of the helicopter and additions or deletions of equipment. The list is intended to be used as a guide only.

Equipment	Model
Blade Folding Racks	All
A-1A Cargo Tie-Down Container	H-21B, H-21C
Clutch Manual Operating Wrench	All
AN/ARN-30 Navigational Receiving Equipment Handbooks	
Operating Instructions	H-21C
Maintenance Instructions	H-21C
Illustrated Parts Breakdown	H-21C
ARC Type 12 Radio Set Maintenance Instructions Handbook	H-21C
ARC Type 12 Radio Set Operating Instructions Handbook	H-21C
AN/PRC-10 Radio Set Operating Instructions Handbook	H-21B
AN/PRC-9 Radio Set Operating Instructions Handbook	H-21B
AN/PRC-8 Radio Set Operating Instructions Handbook	H-21B
Combat Interphone System Handbook	H-21A, YH-21
AN/ARC-27 Operating Instructions Handbook	H-21B
AN/ARC-27 Maintenance Instructions Handbook	H-21B
Weight and Balance Data Handbook	All
Maintenance Instructions Handbook for the Helicopter	All
Flight Handbook for the Helicopter	All
External Cargo Sling	All
Blackout Curtains	All
Rescue Hoist Kit	H-21B, H-21C
Cargo Tie-Down Rings	All
Antiglare Curtain	All
Auxiliary Fuel Provisions	H-21B, H-21C
Aircraft Flight Report and Maintenance Record—DD Form 781-1 thru -7	All
Historical Record for Aeronautical Equipment—DD Form 829 Series	All
Aircraft Checker's Report Form—DD Form 780 Series	All

2-262. EXTERNAL CARGO SLING.

2-263. DESCRIPTION. The external cargo sling, which is provided as fly-away equipment with each helicopter, enables the helicopter to pick up and carry items which are too bulky to fit in the cabin. The sling is attached to fittings on the forward jacking pads and, on YH-21 and H-21A helicopters, to the main alighting gear V-strut attachment fittings. On the H-21B and H-21C helicopters, the rear sling cables are attached to fittings located on either side of the fuselage below and to the rear of the main door. The cargo hook release system, which enables the pilot to drop cargo from the sling, is a cable and spring system which is located under the cabin floor. Operating handles for the system are found in the cockpit on the rear of the collective pitch lever shield and in the cabin on the right side of the main door. An electric actuator which trips the hook release cable when the release switch is actuated is incorporated in the H-21B and H-21C helicopters. The external sling used on YH-21 helicopters has a capacity of 3000 pounds, while the sling used on H-21A, H-21B, and H-21C helicopters has a capacity of 4500 pounds. When not in use, the sling may be raised and stowed by raising the hook stowage cable found on the YH-21 helicopters or by reeling in the cable found on H-21A helicopters. All H-21B helicopters and most of the H-21C helicopters have no provisions for raising or lowering the hook. Some H-21C helicopters have a retracting cable to raise the hook when the cargo sling is not in use and can be quickly detached when removing the sling. A bracket under the fuselage is provided for hook stowage on the helicopters not equipped with the retracting cable.

2-264. INSTALLATION. (See figures 2-41, 2-42, and 2-42A.) The installation of the external sling is accomplished in the following manner:

a. Attach the forward sling cables (14) to the fittings on the forward jacking pads.

b. Attach the aft sling cables (9) to the alighting gear fittings for YH-21 and H-21A helicopters or to the fuselage fittings for H-21B and H-21C helicopters.

CAUTION

The turnbuckles on the sling must be encased with heavy-wall vinyl tubing to

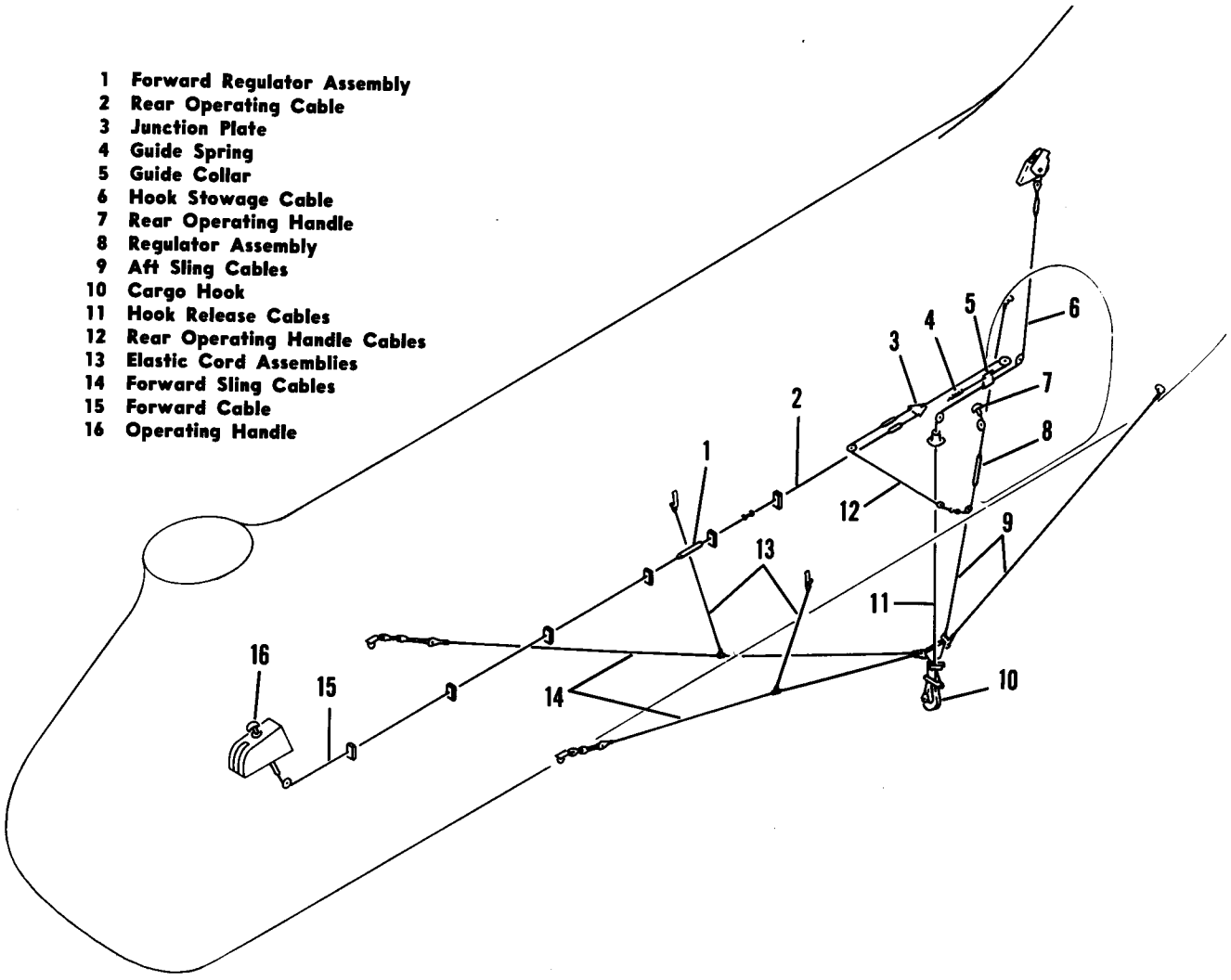

Figure 2-41. Cargo Sling and Release Mechanism—YH-21

prevent chafing of the fuselage skin when the sling is in the stowed position.

c. Attach the hook release cable (11) to the hook and if the helicopter is an H-21C model with a retractable cable installation, attach the ball terminal of the cable assembly (17, figure 2-42A) to the quick-disconnect on the yoke assembly (18) which is attached to the forward cargo sling cable shackle on the hook.

d. Attach the elastic cord assemblies to the forward sling cables and to the fuselage brackets.

e. Rig the hook release system as described in this section.

2-265. REMOVAL. (See figures 2-41, 2-42, and 2-42A.) Removal of the external sling may be accomplished by reversing the installation procedure.

2-266. REMOVAL—CARGO HOOK RELEASE SYSTEM. (See figures 2-41, 2-42, and 2-42A.) The cargo hook release mechanism is removed from the helicopter in the following manner:

Note

The following instructions are effective on all helicopters. Any deviations from procedure are noted where applicable.

a. Remove the external cargo sling and cargo hook (10).

b. Raise the floor panels to gain access to the release system cables.

c. Disconnect the forward cable (15) from the operating handle (16) in the cockpit. Pull the operating handle from the shield if it is necessary to remove it. Disconnect the other end of the

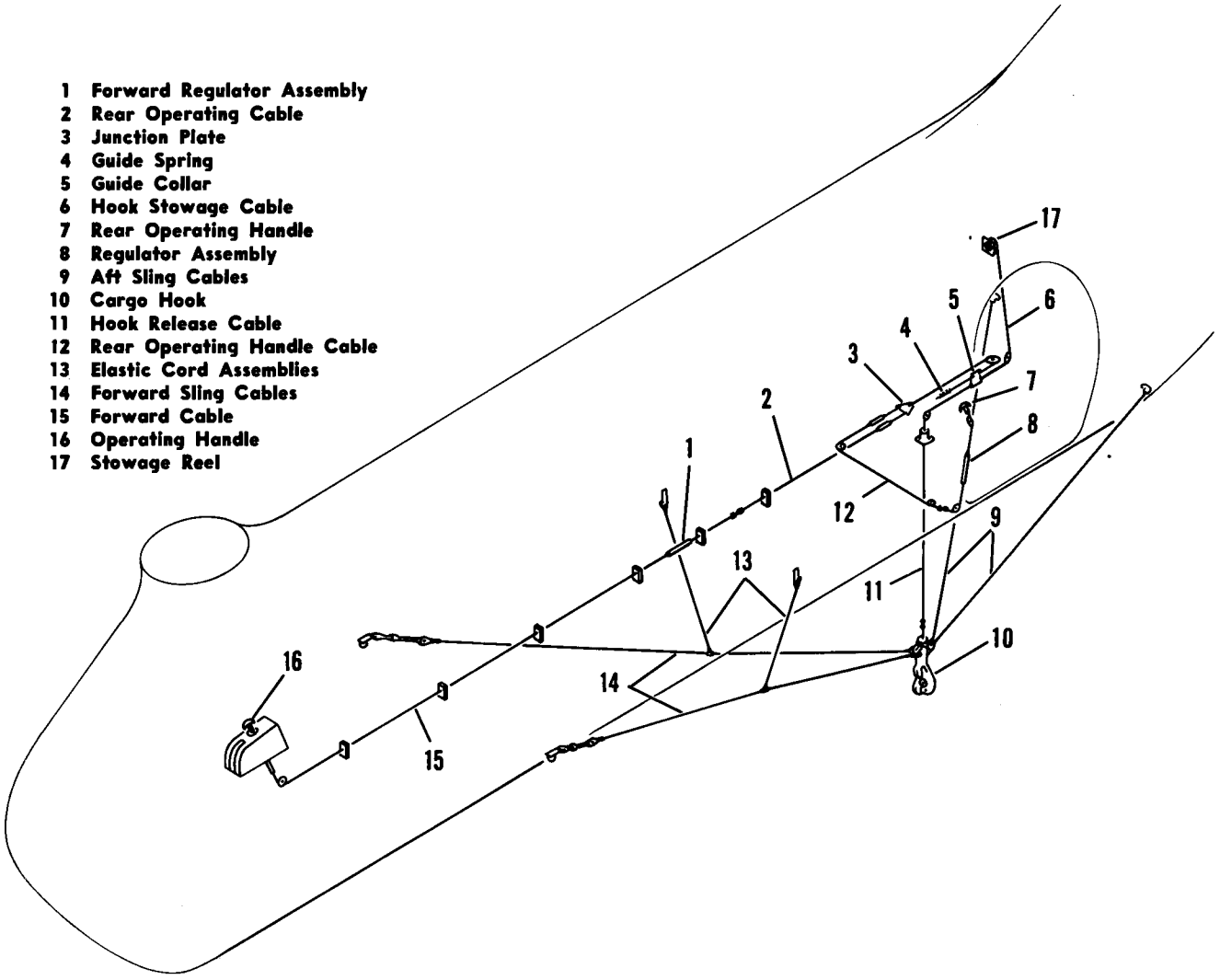

Figure 2-42. Cargo Sling and Release Mechanism—H-21A

cable from the regulator assembly (1). Remove the cable.

d. Disconnect the regulator assembly (1) from the rear operating cable (2) at the quick disconnect. Remove the regulator.

e. Disconnect the rear operating cable (2) and rear operating handle cable (12) from the junction plate (3). On H-21B and H-21C helicopters remove the bolts which secure the stop to the actuator arm and remove the stop. Disconnect the rear operating handle cable at the quick disconnect below the regulator assembly (8) and remove the cables.

f. Disconnect the rear operating handle (7) from the regulator assembly (8) and remove both units.

g. Disconnect the hook release cable (11) from the junction plate (3) and remove the junction plate. On H-21B and H-21C helicopters the hook release cable may now be removed.

h. On YH-21 and H-21A helicopters remove the spring (4) from the clip. Disconnect the release cable (11) from the guide collar (5, figures 2-41 and 2-42) and remove it.

i. Detach the hook stowage cable (6) from the guide collar (5). Slide the swaged ball end of the cable from the slot of the stowage reel (17) on H-21A helicopters. Remove the hook stowage cables.

j. Remove the hook release cable (6) and guide collar (5).

2-267. INSTALLATION. (See figures 2-41, 2-42, and 2-42A.) Installation of the cargo hook re-

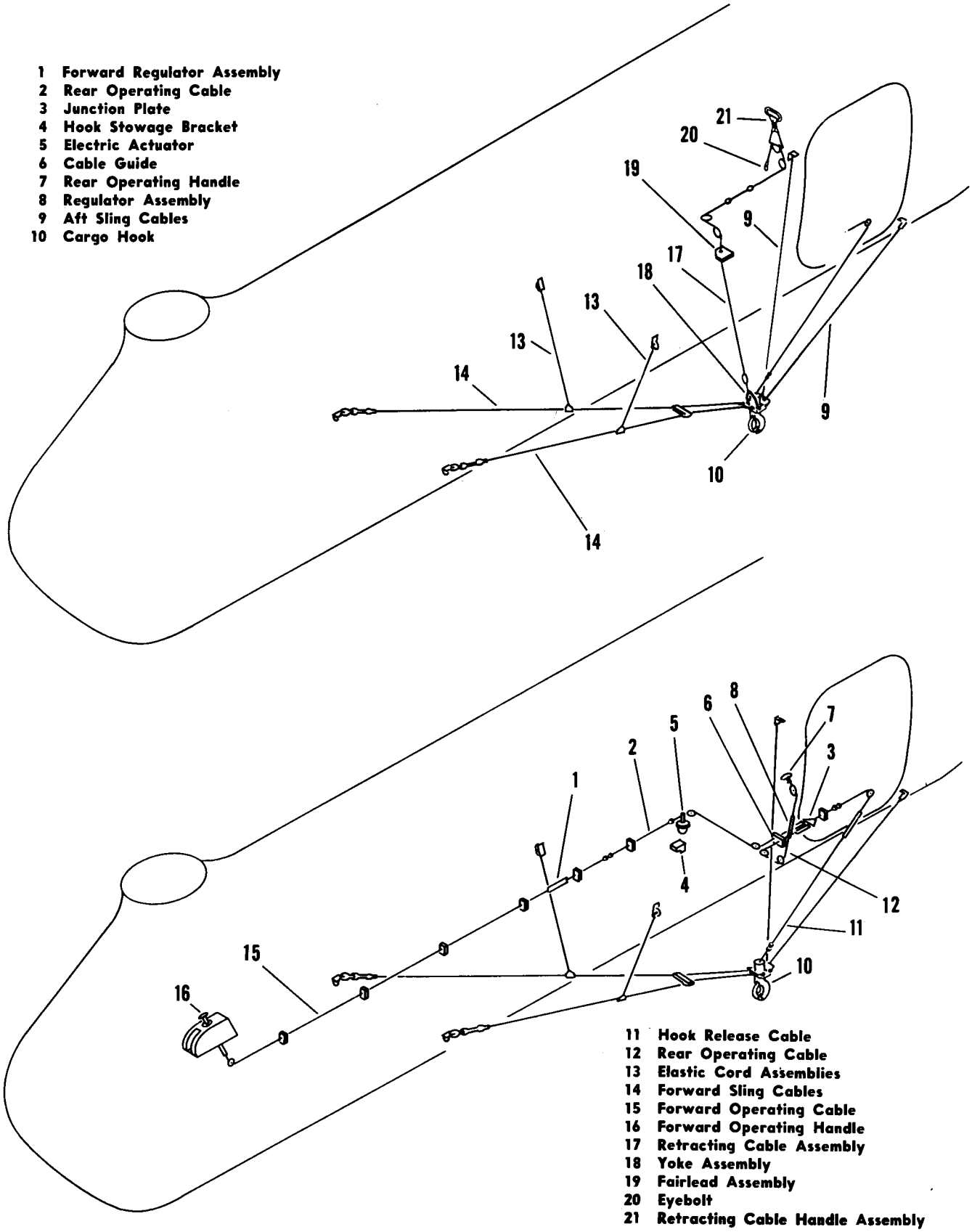

Figure 2-42A. Cargo Sling and Release Mechanism—H-21B, H-21C

lease system is the reverse of the removal procedure.

2-267A. RIGGING CARGO HOOK RELEASE SYSTEM. (See figures 2-41, 2-42, and 2-42A.) The cargo hook release system should be rigged in the following manner:

a. The quick disconnect of the release cable (11) should be located 2.75 (2-3/4) inches forward of the pulley bracket on YH-21 and H-21A helicopters. On H-21B and H-21C helicopters, the quick disconnect should be located 2.75 (2-3/4) inches aft of the fairlead at station 339.5.

b. With the forward operating handle seated on the collective pitch lever shield, the end of the forward regulator assembly (1) should lie 0.5–2.0 (1/2–2) inches forward of station 259.5. Compress the spring in the regulator 2.75 (2-3/4) inches. This may be done by extending the cable on the end of the regulator until the ball terminal is 9.46 inches from the regulator.

c. With the rear operating handle seated on the shelf beside the cabin door, the lower end of the regulator assembly (8) should be 2.88–3.88 inches above the centerline of the pulley. The spring should be compressed 2.75 (2-3/4) inches. This may be done by extending the cable on the end of the regulator until the ball terminal is 9.46 inches from the regulator.

d. On H-21B and H-21C helicopters the ball terminal on the rear operating cable should be located 8.95 ±0.25 inches from station 311.81. Adjust the cable turnbuckle as necessary to obtain this dimension.

e. Adjust the operating arm of the electric actuator (5, figure 2-42A) found on H-21B and H-21C helicopters to permit 47-1/2 degrees of travel. This travel should move the ball terminal 2.55 inches when the release switch is actuated.

f. With the cargo sling taut, adjust the hook release cable until the cable contacts the guide collar (5, figures 2-41 and 2-42) on YH-21 and H-21A helicopters.

g. On YH-21 helicopters, install the hook stowage cable. With the hook in the up position, preload the cable to a tension of 30 ±5 pounds and lockwire the turnbuckle in this position.

h. On H-21A helicopters, install the hook stowage cable. Place the ball terminal in the slot of the reel and raise the hook.

i. On H-21B and H-21C helicopters suspend a 500-pound load from the cargo sling. Adjust the external turnbuckle so that the release cable moves 0.03–0.09 (1/32–3/32) inch out of the hook from the fully closed position.

j. Check the force required to operate the release system which must not exceed 60 pounds. This force check should be performed for both manual operating handles. An operational check of the electric actuator on the H-21B and H-21C helicopters should also be performed; however, it is not necessary to measure forces when performing this check. Operate the actuator from the switch on the cyclic stick.

2-267B. REMOVAL OF THE RETRACTING CABLE. (See figure 2-42A.) The retracting cable is removed from the helicopter in the following manner:

a. Disconnect the retracting cable assembly (17) from the quick-disconnect fitting on the yoke assembly (18). Remove the bolt attaching the forward cargo sling shackle to the hook (10). Remove the yoke assembly and reinstall the bolt.

b. Remove a half of the fairlead assembly (19) located on the bottom of the fuselage between stations 311.81 and 315.66. Pull the loose end of the cable assembly up into the helicopter and replace the fairlead half.

c. Remove the clamps at stations 319.50 and 339.50 and the pulleys at stations 359.80 and 311.81.

d. Detach the clevis at the end of the cable from the eyebolt (20) located in the cove at station 359.80, and remove the cable assembly from the helicopter.

2-267C. INSTALLATION OF THE RETRACTING CABLE. (See figure 2-42A.) The installation of the retracting cable is the reverse of the removal procedure.

2-268. ALIGHTING GEAR.

CAUTION

All parts have been properly identified by the contractor. However, if for any reason it becomes necessary to reidentify parts, extreme care should be exercised. Because of the possible build-up of stress concentrations, impression stamping or permanent etching must not be used on any parts unless specific instructions are given in this handbook. The use of rubber ink stamp or the tagging of parts is acceptable.

2-269. MAIN ALIGHTING GEAR. **YH-21**

2-270. DESCRIPTION. (See figure 2-43.) Each leg of the main alighting gear is composed of three major assemblies—V-strut, oleo strut, and wheel. The V-strut is a welded steel tubing assembly incorporating the wheel fork, jacking point and attachment fitting for the oleo. It is attached to the fuselage bottom just forward of the engine compartment and to the lower end of the oleo strut. The oleo is an air-oil type shock strut. It is attached to the V-strut at its lower end and to the fuselage at the upper end. The wheel assembly consists of a wheel, a tire, a tube, and a brake assembly plus the necessary bearings, seals, and axle to attach the wheel to the V-strut fork.

2-271. REMOVAL AND DISASSEMBLY. (See figure 2-43.) Remove and disassemble the main alighting gear as follows:

a. Release all air from the shock struts as directed in paragraph 1-84B.

b. Raise the helicopter at the fuselage jacking points so that the wheels are clear of the ground.

c. Disconnect the hydraulic line at the brake.

d. Loosen the inner and outer axle nuts (20 and 13). If the wheel is to be disassembled, remove the nuts.

e. Remove the bolts (7 and 7A) and the caps (6) from the fork arms.

f. Lower the wheel assembly from the yoke.

g. Straighten the tangs on the lock washer (16), loosen the lock nut (15) and loosen the thrust nut (17) on the thrust collar (14).

h. Slide the thrust collar from the axle (18) and remove the thrust nut, lock washer, and lock nut.

i. Remove the five brake disc retaining clips and slide the brake disc and brake assembly from the axle.

j. Remove the eight bolts that hold the brake (28) and the brake attachment assembly (19) together.

k. Slide the axle from the wheel assembly.

l. Remove the grease seal (9), outer bearing (10), inner bearing (25) and inner grease seal assembly (24, 23, and 22).

m. Completely deflate the tire and remove the eight bolts which hold the two sections of the wheel together.

WARNING

Do not attempt to remove the eight bolts from the wheel without first releasing all air pressure from the tire.

n. Separate the two sections of the wheel assembly (11 and 26) and remove the tube from the tire. Check the inboard wall of the tire for lacerations. Any lacerations of the inboard wall will be caused by the raised-head screws which secure the blocks for the brake disk to the wheel casting. Filing off the heads of these screws to the depth of the screw-driver slot will prevent further tire lacerations. Should it be necessary to remove these screws after they have been filed, they may be drilled out and replaced by rivets.

o. Disconnect the hydraulic brake hose where it emerges from the fuselage and drain the fluid.

p. Disconnect the two universal fittings (4) located at the fuselage and at the V-strut and remove the shock strut.

q. Disconnect the V-strut tubes from their hinge points underneath the fuselage and pull the V-strut free of the helicopter.

2-272. LUBRICATION. The shock strut is serviced as outlined in Section I. Periodic Lubrication of the main alighting gear is shown in the Lubrication Chart. The wheel bearings should be packed with grease, Spec MIL-L-3545, before the unit is re-assembled.

2-273. ASSEMBLY AND INSTALLATION. (See figure 2-43.) Assemble and install the main alighting gear as follows:

a. Connect the V-strut (27) to the fuselage.

b. Attach the shock strut (3) to the V-strut and to the fuselage with the universal fittings (4).

c. Connect the hydraulic brake hose at the fitting near the fuselage.

d. Insert the brake pin and retaining ring in the wheel fork.

e. Place a tube inside a tire and place the two wheel halves (26 and 11) over them. After

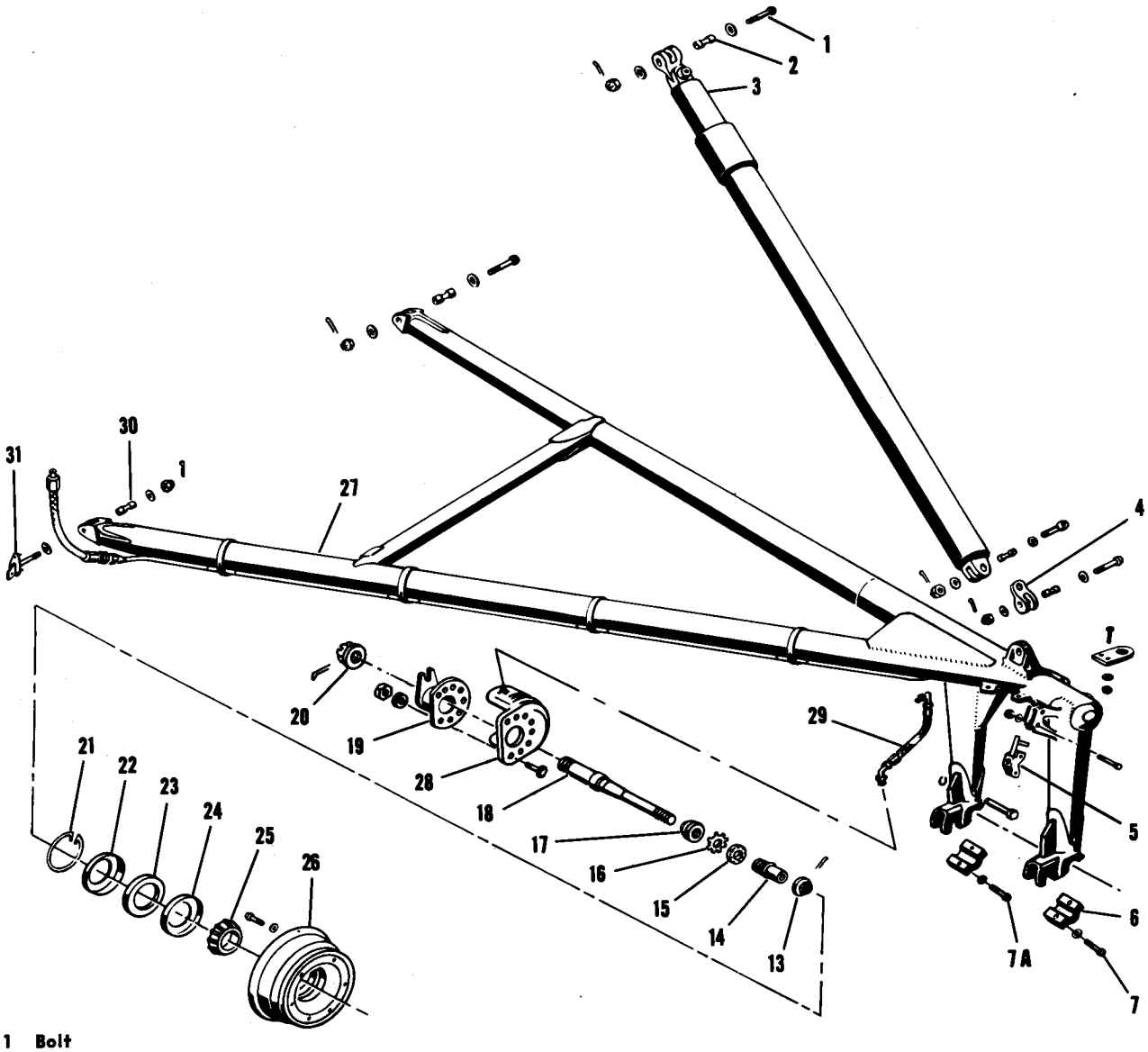

1 Bolt
2 Bushing
3 Oleo Strut Assembly
4 Universal
5 Mechanical Rigger Fixture
6 Cap
7 Bolt (22L1070-1)
7A Bolt (22L1070-2)
8 Snap Ring
9 Cap and Seal
10 Bearing
11 Wheel Half
12 Tire (7.50-10, Type III) and Tube (7.50-10, Type III)
13 Outer Nut
14 Thrust Collar
15 Lock Nut
16 Lock Washer
17 Thrust Nut
18 Axle
19 Brake Attachment Assembly
20 Inner Nut
21 Snap Ring
22 Cup
23 Seal
24 Cup

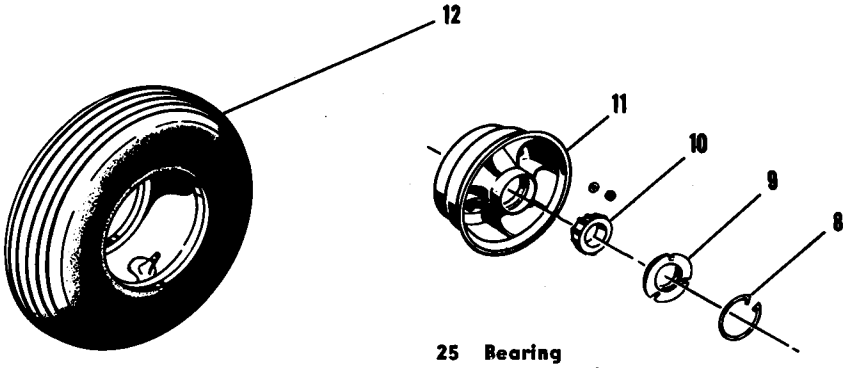

25 Bearing
26 Wheel Half
27 V-Strut Assembly
28 Brake Assembly
29 Brake Line
30 Bushing
31 Bolt
32 Bushing
33 Bolt

Figure 2-43. Main Alighting Gear—YH-21

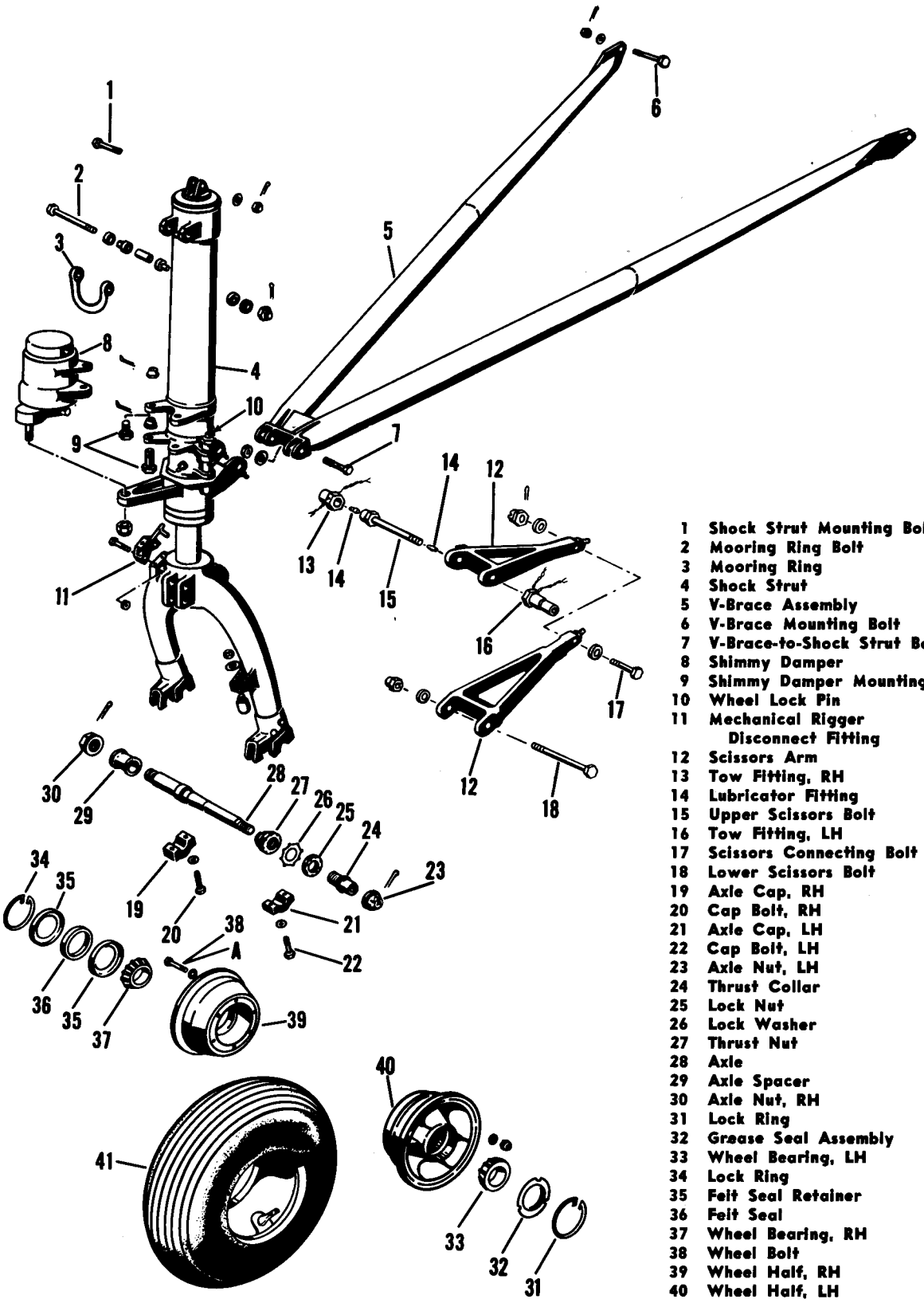

1 Shock Strut Mounting Bolt
2 Mooring Ring Bolt
3 Mooring Ring
4 Shock Strut
5 V-Brace Assembly
6 V-Brace Mounting Bolt
7 V-Brace-to-Shock Strut Bolt
8 Shimmy Damper
9 Shimmy Damper Mounting Bolt
10 Wheel Lock Pin
11 Mechanical Rigger Disconnect Fitting
12 Scissors Arm
13 Tow Fitting, RH
14 Lubricator Fitting
15 Upper Scissors Bolt
16 Tow Fitting, LH
17 Scissors Connecting Bolt
18 Lower Scissors Bolt
19 Axle Cap, RH
20 Cap Bolt, RH
21 Axle Cap, LH
22 Cap Bolt, LH
23 Axle Nut, LH
24 Thrust Collar
25 Lock Nut
26 Lock Washer
27 Thrust Nut
28 Axle
29 Axle Spacer
30 Axle Nut, RH
31 Lock Ring
32 Grease Seal Assembly
33 Wheel Bearing, LH
34 Lock Ring
35 Felt Seal Retainer
36 Felt Seal
37 Wheel Bearing, RH
38 Wheel Bolt
39 Wheel Half, RH
40 Wheel Half, LH
41 Tire and Tube
A Torque to 120 pound-inches

Figure 2-44. Nose Alighting Gear—YH-21

properly aligning the valve stem, bolt the two wheel halves together with the eight bolts. Torque the bolts to 170 pound-inches.

f. Place the inner grease seal assembly (22, 23, and 24) and the cone of bearing (25) on the axle (18). Place the cup of bearing (25) in the wheel. Place the cup of the outer bearing (10) in the wheel and slide the axle into the wheel. Install the cone of the outer bearing (10) and grease seal (9).

g. Thread the lock nut (15), washer (16), and thrust nut (17) on the thrust collar (14).

h. Slide the thrust collar on the axle and thread on the outer nut (13) to hold the collar in place.

i. Insert the eight bolts that attach the brake (29) to the brake attachment assembly (19).

j. Lift the wheel assembly up into the fork. Be careful to place the brake and assembly adapter slot over the brake pin. Install the fork caps (6) and install bolts (7 and 7A) finger-tight.

CAUTION

Bolts (7 and 7A) carry the same basic part number; however, they are identified by different dash numbers. The (-1) bolt (7) is two inches long and is used to secure the cap to the outboard leg of the fork. The (-2) bolt (7A) is 2-1/8 inches long and secures the cap to the inboard leg of the cap. Do not install the (-2) bolt in the outboard leg of the fork as the bolt may bottom in the bolt hole, preventing the cap from securing the axle in place.

k. Pull the axle outward and tighten the inner fork cap bolts. Tighten the outer axle nut and safety. Tighten the thrust nut against the wheel bearing grease seal until the wheel is firm, yet free to rotate. Tighten the lock nut and bend over the tang on the lock washer.

l. Tighten and safety the outer fork bolts.

m. Loosen the inner fork cap bolts, install and tighten the inner axle nut and safety. Retighten the inner fork cap bolts and safety.

n. Connect the hydraulic line to the brake.

o. Inflate the tires to the correct pressure before lowering the helicopter to the ground and removing the jacks. For correct tire pressure, see Tire Service, Section I.

p. Bleed the brake system and service the shock strut.

Note

Bleed brakes as outlined in Hydraulic Brakes, Section III. Service shock struts as outlined in Shock Strut Service, Section I.

2-274. NOSE ALIGHTING GEAR. **YH-21**

2-275. DESCRIPTION. (See figure 2-44.) The nose alighting gear consists of four major assemblies—V-brace, shock strut, wheel assembly, and shimmy damper. The V-brace is a welded steel tubing assembly attached to the underside of the fuselage at two laterally disposed attaching points. The apex of the V-brace is attached to the shock strut assembly. The shock strut is attached to the fuselage at its upper end and the wheel yoke at the lower end. The wheel yoke is connected to the shock strut by a scissors assembly. The wheel assembly includes the yoke plus the attached jacking point, axle, wheel, and mooring ring. The shimmy damper is secured to the fixed section of the shock strut and is attached to the movable section to absorb wheel shimmy. A nose wheel lock is provided for use when flotation gear is installed and in ground handling. The wheel lock is operative only when the wheel is aligned fore and aft. After the helicopter is airborne, the weight of the wheel plus the air pressure, force the shock strut to extend. A cam on the shock strut piston engages a follower in the cylinder as the shock strut extends, rotating the wheel to a fore and aft position in flight.

2-276. REMOVAL AND DISASSEMBLY. (See figure 2-44.) Remove and disassemble the nose alighting gear as follows:

a. Disconnect the nose wheel lock cable and allow the lock pin to engage the wheel. Roll up the cable to prevent interference with work.

b. Release all air from the strut as directed in paragraph 1-84B.

c. Raise the helicopter at the forward jacking points until the nose alighting gear is clear of the ground.

d. Loosen the left axle nut (23) and the right axle nut (30). If the wheel is to be disassembled, remove the nuts.

e. Remove the cap bolts (20 and 22) and caps (19 and 21).

f. Lower the wheel from the fork.

g. Straighten the tang on the lock washer (26), back off the lock nut (25) and back off the thrust nut (27) on the thrust collar (24).

h. Remove the thrust collar, thrust nut, lock washer, and lock nut.

i. Remove the axle (28). Remove spacer (29) from the axle.

j. Remove both lock rings (31 and 34), left grease seal (32), felt retainers (35), felt (36), and both wheel bearings (33 and 37) from the wheel assembly.

k. Completely deflate the tire and remove the eight bolts (38) which hold the two wheel sections (39 and 40) together.

WARNING

Do not attempt to remove the eight bolts from the wheel without first releasing all air pressure from the tire.

l. Separate the wheel halves and remove the tire and tube.

m. Remove the mounting bolts (9) and the shimmy damper (8).

n. If it is necessary to remove the two fittings (13 and 16) or the scissors assembly (12), cut the lock wire on each side of the upper scissors bolt and unscrew both fittings. Remove the fittings

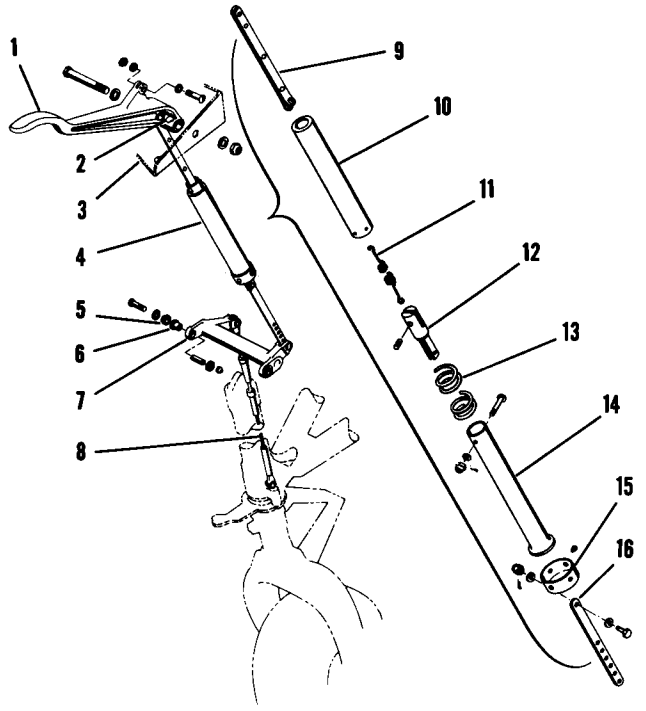

1	Lever	9	Terminal Assembly
2	Spacer	10	Outer Tube
3	Support Bracket	11	Extension Spring
4	Bungee Assembly	12	End Fitting
5	Spacer	13	Compression Spring
6	Bushing	14	Inner Tube
7	Bellcrank	15	Cap
8	Cable Assembly	16	Link

Figure 2-45. Nose Alighting Gear Lock

and the upper scissors bolt (15). Remove the lower scissors bolt (18) and the scissors assembly (12). Disconnect the scissors assembly by removing the connecting bolt (17).

o. Remove the V-brace bolts (7), the shock strut mounting bolt (1), and the shock strut (4).

p. Remove the V-brace mounting bolts (6) and the V-brace (5).

2-277. ASSEMBLY AND INSTALLATION. (See figure 2-44.) Assemble and install the nose alighting gear as follows:

a. Connect scissor arms (12) with connecting bolt (17). Attach the upper arm to the shock strut (4) by inserting the upper scissors bolt (15). The two lubricator fittings (14) must be attached to each end of the bolt before the two fittings are screwed on. Screw the right tow fitting (13) on the scissors bolt and lock wire the fitting to the scissors assembly. Screw the left tow fitting (16) on the scissors bolt and lock wire the fitting to the bolt. Attach the lower portion of the scissors assembly to the shock strut. If the bolt holes will not line up, disconnect the lower scissors arm, turn it over and reconnect. The holes should then line up. Install the lower scissors bolt (18).

b. Install the shimmy damper (8) on the shock strut with the four mounting bolts (9).

c. Insert the tube in the tire and carefully align the valve stem with the valve stem port on one wheel half; then position the other wheel half, and bolt the halves together. Torque the bolts (38) to 120 pound-inches and inflate the tire to the proper pressure as outlined under Tire Service, Section I.

d. Insert both wheel bearings (33 and 37), packed with grease as shown in figure 1-26, into the wheel assembly. On the side with the larger bearing (37), insert two felt seal retainers (35) with a felt (36) between. Secure with a lock ring (34). Insert grease seal assembly (32) in the opposite side of the wheel assembly and secure with a lock ring (31).

e. Insert axle (28) through the wheel assembly. Thread lock nut (25), lock washer (26), and thrust nut (25) on the thrust collar (24). Install assembly on the axle and screw the left axle nut (23) on loosely.

f. Slide axle spacer (29) on the axle and screw the right axle nut on loosely.

g. Place the wheel assembly into the fork of the shock strut, attach the axle caps (19 and 21), and tighten the cap bolts (20 and 22) finger tight. Make sure the thrust collar (24) is properly seated inside cap (21).

h. Tighten the thrust nut until the wheel is firm yet free to rotate. Tighten the lock nut against the thrust nut and bend one tang of the lock washer over the thrust nut and one tang over the lock nut.

i. Tighten both axle nuts (23 and 30) and secure with cotter pins.

j. Tighten the four cap bolts (20 and 22) and secure with lock wire.

k. Attach the V-brace assembly (5) to the fuselage with the mounting bolts lubricated with anti-seize compound, Spec JAN-A-669.

l. Attach the shock strut (4) to the fuselage and the V-brace assembly (5).

m. Connect the nose wheel lock cable to the lock pin (10) and preload the cable to a tension of 16 $\pm$ 2 pounds. Check the operation of the nose wheel lock system by raising and lowering the lever (1, figure 2-45) several times. The lock pin (10) should fully engage and disengage freely.

n. Lower the helicopter to the ground and remove the jacks.

o. Service the shock strut as outlined in Shock Strut Service, Section I.

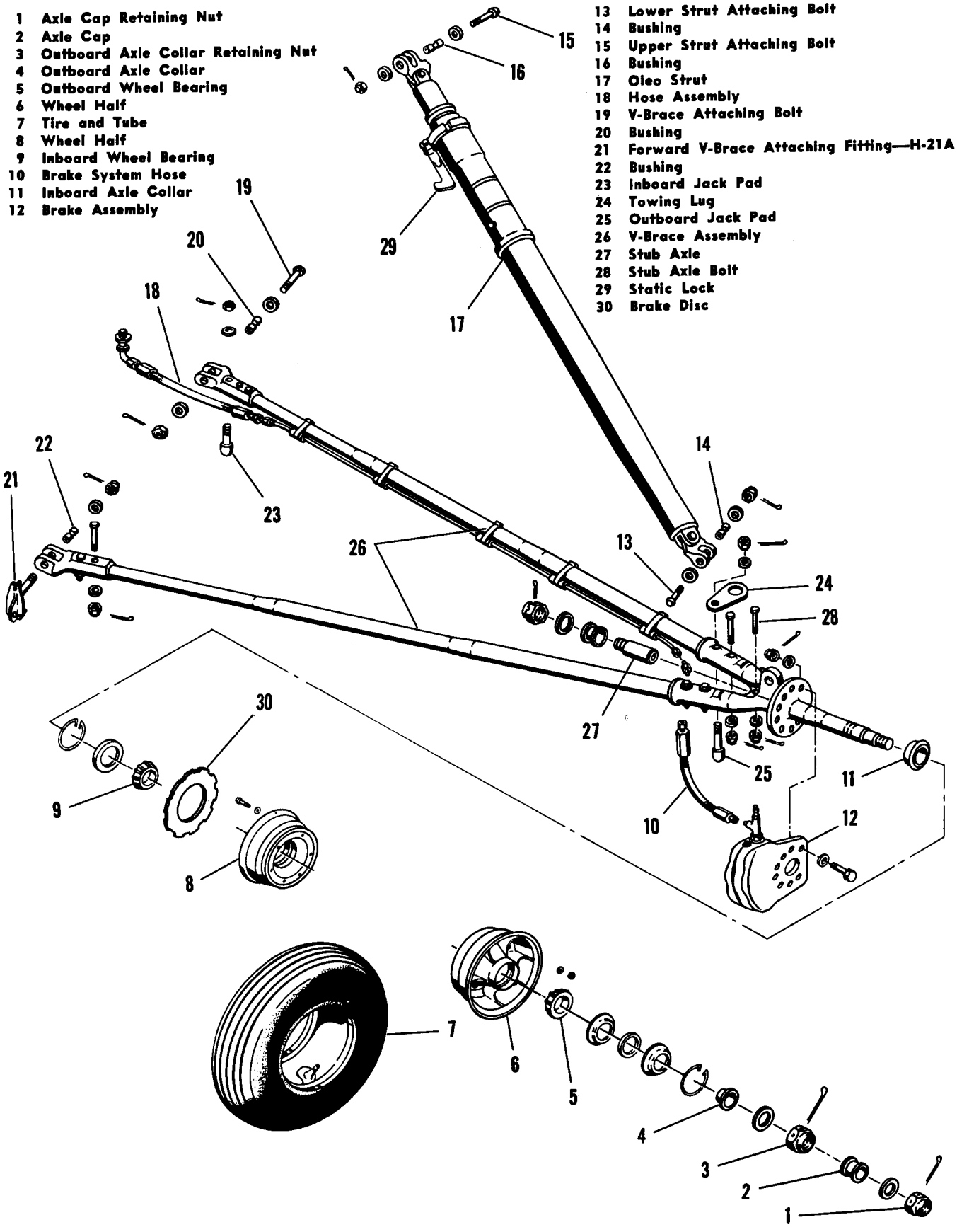

Figure 2-46. Main Alighting Gear—H-21A, H-21B, and H-21C

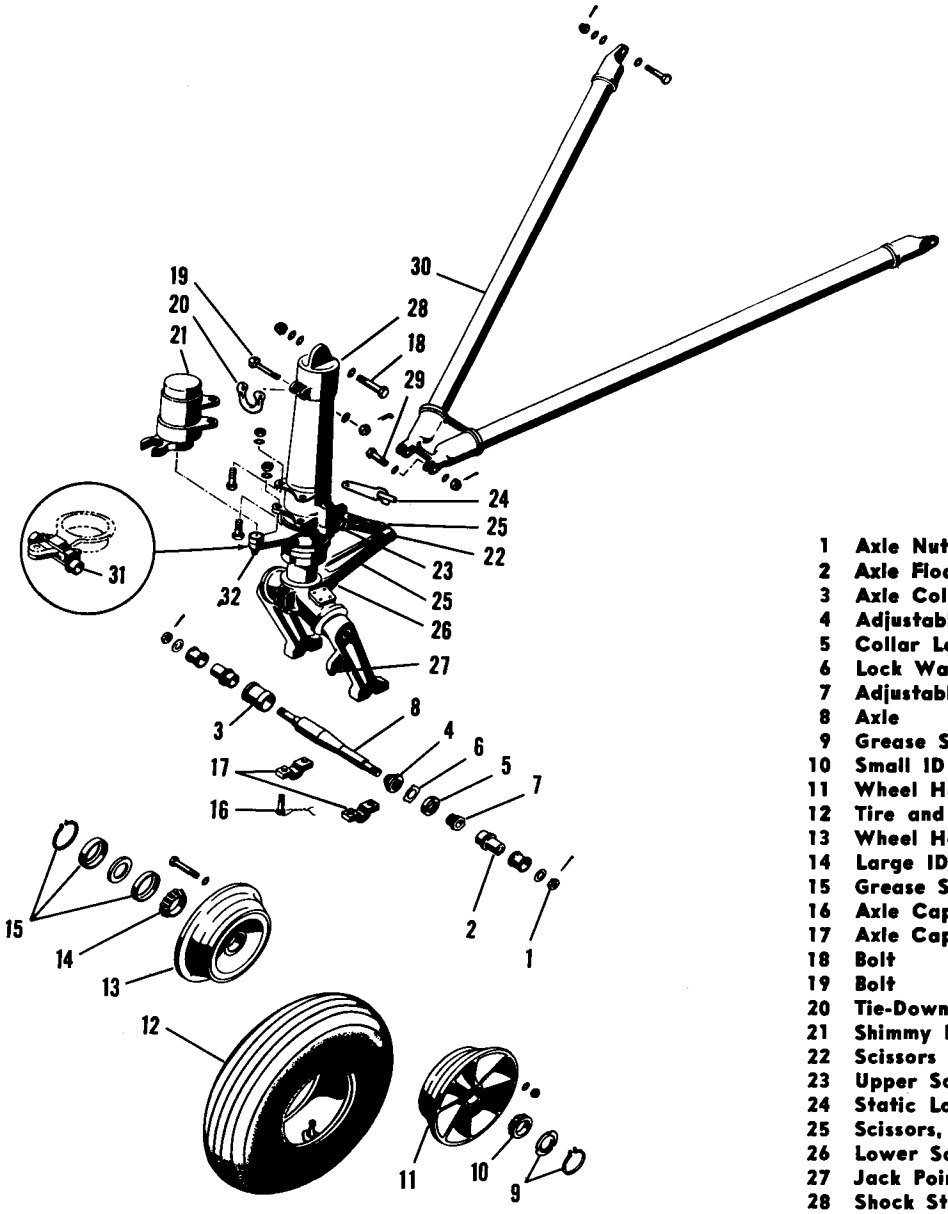

Figure 2-47. Nose Alighting Gear—H-21A, H-21B, and H-21C

2-278. LUBRICATION. Periodic lubrication of the nose alighting gear pivot points is shown in the Lubrication Chart. The wheel bearings should be packed with grease, Spec MIL-L-3545, before reassembly.

2-279. MAIN ALIGHTING GEAR. **H-21A, H-21B, & H-21C**

2-280. DESCRIPTION. (See figure 2-46.) Each leg of the main alighting gear is composed of three major assemblies; V-brace, shock strut, and wheel. The V-brace is a step-tapered steel tubular structure with machined attaching points bolted to it. It incorporates inboard and outboard jacking points, towing lug, axle, and wheel brake. It is attached to the fuselage bottom just forward of the engine compartment and to the lower end of the shock strut. The shock strut is an air-oil type strut and incorporates a static position lock that locks the strut in the deflated position for jacking the fuselage. The strut is attached to the V-brace at the lower end and to the fuselage at the upper end. The wheel assembly consists of a wheel, tire, tube and brake assembly plus the necessary bearings and seals to attach the wheel to the axle. The

V-braces of the H-21A, H-21B, and H-21C helicopters are interchangeable individually. However, the V-brace of the H-21A helicopters is equipped with a stub axle to facilitate installation of flotation equipment. Flotation equipment can be installed on H-21B or H-21C V-braces by reaming the stub axle bolt hole in the V-brace (26) to a diameter of 0.3125, +0.0006 or −0.0000 inch and installing a used stub axle (27). If a new stub axle (27) is to be used, install the axle stub in the V-brace and, using the stub axle bolt hole as a pilot, drill a hole with a diameter of 0.295, +0.006 or −0.000 inch through the V-brace and axle stub. Ream the hole to a diameter of 0.3125, +0.0006 or −0.0000 inch. Secure the stub axle with an AN175-23A close tolerance bolt (28).

Note

Some H-21B and H-21C helicopters have main alighting gear shock struts that do not have provisions for rigger mounting. These shock struts will have to be replaced with those that have the rigger provisions if the gear is being prepared for flotation equipment.

2-281. REMOVAL AND DISASSEMBLY. (See figure 2-46.) Remove and disassemble the main alighting gear as follows:

a. Release all air from the shock struts as directed in paragraph 1-84B.

b. Jack the helicopter at the fuselage jacking points so that the wheels are clear of the ground.

c. Disconnect the hydraulic line at the brake.

d. Remove the axle cap retaining nut (1) and axle cap (2).

e. Remove the outboard axle collar retaining nut (3) and outboard axle collar (4).

f. Remove the wheel and bearings.

g. Remove the attaching parts and slide the brake assembly (12) and the inboard axle collar (11) from the axle.

h. Remove from the wheel assembly, the inboard wheel bearing (9) and outboard wheel bearing (5).

i. Completely deflate the tire and remove the bolts which hold the two sections of the wheel together.

WARNING

Do not attempt to remove the bolts from the wheel without first releasing all air pressure from the tire.

j. Separate the two wheel halves (6 and 8) and remove the tube from the tire.

k. Remove the shock strut (17) by removing the bolts (13 and 15) and, utilizing a soft metal drift, remove the bushings (14 and 16).

l. Remove the V-brace assembly (26) by disconnecting the hydraulic line (18), removing the bolt (19), fitting (21) and, using a soft metal drift, remove the bushings (16 and 22).

2-282. ASSEMBLY AND INSTALLATION The assembly and installation of the main alighting gear is the reverse of the removal and disassembly procedure with additional requirements as follows:

a. The V-braces (26) are interchangeable from either side, but care must be exercised that the brakes (12) be installed forward of the axles and that the correct size hose (18) are attached between the fuselage and the brake lines on the V-braces.

b. When installing the V-brace (26) on an H-21A helicopter, place the fitting (21) in from the front on the forward end of the V-brace. The H-21B and H-21C helicopters will use bolts (19) at both ends.

c. Torque the wheel half attaching bolts to 210 pound-inches.

d. Inflate the tires to the correct pressure before lowering the helicopter to the ground and removing the jacks. For correct tire pressure, see Tire Service, Section I.

e. Bleed the brake system and service the shock strut.

Note

Bleed brakes as outlined in Hydraulic Brakes, Section III. Service shock struts as outlined in Shock Strut Service, Section I.

2-283. LUBRICATION. The shock strut is serviced as outlined in Section I. Periodic Lubrication is shown in the Lubrication Chart. The wheel bearings should be packed with grease, Spec MIL-L-3545, before the unit is reassembled.

2-283A. STATIC GROUND WIRE. A static ground wire is provided to discharge any electrostatic currents which accumulate within the structure of the helicopter. The static ground wire is attached on the left main landing gear strut. When the helicopter is landing or is on the ground, the static ground wire makes contact with the ground and thus discharges any electrostatic currents that may be present.

2-284. NOSE ALIGHTING GEAR. **H-21A, H-21B, & H-21C**

2-285. DESCRIPTION. (See figure 2-47.) The nose alighting gear consists of four major assemblies; V-brace, shock strut, wheel assembly and shimmy damper. The V-brace is a steel tubular

structure with machined attaching points bolted to it. It attaches to the fuselage at two laterally disposed attaching points. The apex of the V-brace is attached to the shock strut assembly. The shock strut is an air-oil type strut assembly incorporating a wheel fork, static lock, shimmy damper, and has provisions for tie-down and towing.

2-286. REMOVAL AND DISASSEMBLY. (See figure 2-47.) Remove and disassemble the nose alighting gear as follows:

a. Disconnect the nose wheel lock cable. Allow the lock pin to engage the wheel and roll up the cable to prevent interference with work.

b. Release all air from the strut as directed in paragraph 1-84B.

c. Jack the helicopter at the forward jacking points until the nose alighting gear is clear of the ground.

d. Loosen the two axle nuts (1). If the wheel is to be disassembled, remove the nuts and the two axle float sleeves (2).

e. Remove the axle cap attaching bolts (16) and axle cap (17).

f. Lower the wheel from the fork.

g. Straighten the tang on the lock washer (6), loosen the collar lock nut (5) and screw the adjustable collar bushing (4) from the adjustable collar (7).

h. Remove the grease seals and bearings from the wheel.

i. Completely deflate the tire and remove the bolts holding the two wheel halves (11 and 13) together.

WARNING

Do not attempt to remove the bolts from the wheel without first releasing all air pressure from the tire.

j. Separate the wheel halves and remove the tire and tube.

k. Remove the wheel lock, using figure 2-45 as a guide.

l. Remove the attaching bolts and remove the shimmy damper (21). The towing bracket (31) found on H-21A helicopters may be removed from the shimmy bracket centering arm by removing the centering bolt (32) and separating the two bracket pieces.

m. If necessary, remove the scissors (25) and the static lock (24).

n. Disconnect the shock strut (28) and V-brace (30) from the fuselage.

2-287. ASSEMBLY AND INSTALLATION. (See figure 2-47.) The assembly and installation of the nose alighting gear is the reverse of the removal and disassembly procedure with additional requirements as follows:

a. Coat the V-brace attaching bolts with antiseize compound, Spec JAN-A-669, before installing the V-brace to the helicopter. If the towing bracket (31), found on the H-21A helicopters, has been removed, place the two sections on the shimmy damper centering arm and replace the attaching bolts. Secure the bracket to the centering arm with the centering bolt (32).

b. Torque the wheel half attaching bolts to 170 pound-inches and inflate tire to the correct pressure.

c. Pack the wheel bearings with grease, Spec MIL-L-3545, before assembly.

d. Assemble the wheel axle, collars, and nuts on loosely, and place the wheel assembly into the fork of the shock strut.

e. Attach the axle caps (17), and tighten cap bolts (16) finger tight, making sure that the axle float sleeves (2) are properly seated in the legs of the fork.

f. Snug the adjustable collar bushing (7) against the leg of the fork, and tighten the adjustable collar (4) against the wheel until the wheel assembly is firm yet free to rotate.

g. Tighten the collar lock nut (5) against the lock washer (6) and adjustable collar (4). Align the serrations of the lock nut with the adjustable collar. Bend one tang of the lock washer over the lock nut and one tang over the adjustable collar.

Note

It may be easier to remove the wheel assembly from the fork and slide the adjustable collar, lock washer, and adjustable collar bushing, as an assembly, off the axle to lock them. This can only be done after the wheel assembly has been adjusted to the fork of the shock strut.

h. Tighten the cap bolts (16) securely and lock wire them.

i. Tighten the axle nuts (1) and secure them with a cotter pin.

j. Attach the nose wheel lock cable to the lock pin. Preload the lock cable to a tension of 16 $\pm$2 pounds. Check the operation of the nose wheel lock system by raising and lowering the nose wheel lock lever (1, figure 2-45) a few times. The lock pin should fully engage and disengage freely.

k. Check the V-brace for excessive lateral play at the attachment fittings before lowering the helicopter to the ground. If the lateral play exceeds 0.010 inch, correct the condition by adding

an additional washer as a shim between the straight bushings in the fittings and the terminal fittings of the V-brace.

l. Lower the helicopter to the ground and remove the jacks.

m. Service the shock strut as outlined in Shock Strut Service, Section I.

2-288. LUBRICATION. Periodic lubrication of the nose alighting gear pivot points is shown in the Lubrication Chart. The wheel bearings should be packed with grease, Spec MIL-L-3545, before assembly.

2-288A. BRAKE INSPECTION. The single disc type brake used on H-21 model helicopters consists of a steel brake disc which rotates with the wheel and a housing which contains the operating mechanism and brake linings. When pressure is applied to force the inboard brake lining against the brake disc, the brake disc, which is free to move laterally in the housing, moves until it presses against the outboard brake lining. The disc then receives equal braking on both sides. No manual adjustment is required on the brakes as they adjust themselves automatically. The only maintenance required is a check for improper operation, damage, wear, or distortion of the brake disc, and wear of the brake linings. The brake disc must be replaced if the disc thickness is less than 0.225 inch or if the disc key slots are worn to a width of 1.189 inches. Discs which have dished enough to cause brake drag, should be replaced. The procedure for inspecting brake lining is as follows:

a. Apply the brake and measure the distance between the inboard side of the brake disc and the side of the brake housing facing the disc.

Note

Measurement should be made near the center of the brake disc.

b. If the dimension is 0.219 inch or greater for the YH-21 helicopter and is 0.312 inch or greater on the H-21A, H-21B, and H-21C helicopter, the linings should be replaced as the outboard linings are worn below limits.

c. If the dimensions are less, measure the thickness of the inboard linings and if any one is worn to less than 0.0625 inch, replace all linings.

CAUTION

Always replace a complete set of brake linings in a brake. Never mix new and used linings.

2-289. FLOTATION EQUIPMENT.

2-290. DESCRIPTION. The alighting gear of the YH-21 and H-21A helicopters incorporate provisions for the installation of flotation equipment kits. Each kit contains the float supporting structure, floats, inflating mechanism, electrical cabling, jettison mechanism, tubing and attaching parts necessary to completely equip the main and nose alighting gear. Operation of the float system is as follows:

a. Inflation of the floats occurs when the INFLATE switch on the console is actuated. This energizes the solenoid valve on the CO_2 bottles, allowing gas to flow into the floats. As the floats expand, they automatically open the snap fasteners on the cover. Pressure in the floats is dependant upon three factors, temperature at time of inflation, temperature changes and changes in altitude. A 10°F increase in temperature will cause an increase in floats pressure of 0.33 psi. A 10°F decrease in temperature will result in a float pressure decrease of 0.33 psi. As altitude increases, float pressure increases until it reaches 2.5 psi. Further pressure increases due to altitude changes are compensated for by a pressure relief valve which maintains pressure at 2.5 psi. Since, to maintain the 2.5 psi pressure, air must be expelled, the floats may appear deflated when the helicopter returns from a mission. As long as the landing location is at the same altitude as the starting point, sufficient pressure will remain in the floats to support the helicopter if an emergency landing on water is made.

Note

A minimum pressure of 0.5 psi is necessary to hold the float in shape in flight. This is more than adequate to support the helicopter on water.

b. When floats are inflated prior to flight, the pressure is to be adjusted to 1.5 psi minimum after temperature stabilization, which corresponds to a 0.5 psi minimum pressure in flight.

CAUTION

If the pressures are less, in-flight buffeting of the floats will be induced by rotor downwash.

c. Jettisoning provisions for the floats are built into the float support structure and attachment points. Jettisoning is accomplished by engaging the JETTISON switch on the console. This energizes a solenoid valve which allows high pressure air from the rigger to flow to the rigger release valve. The high pressure air raises a piston in the valve, disconnecting the rigger from the alighting gear. At the same time, the piston in the release valve opens a port allowing high pressure air to flow to the float attachment fittings at the axle. The air raises a piston in the attachment fitting which, in turn, raises a sleeve assembly. As the sleeve is raised, the weight of the float structure forces two retaining pins from a groove in the attachment fitting, permitting the float structure to fall free of the alighting gear. A breakaway plug assures positive breaking of the electrical connections when the flotation equipment is jettisoned.

CAUTION

Do not use the jettison system to remove the floats on the ground.

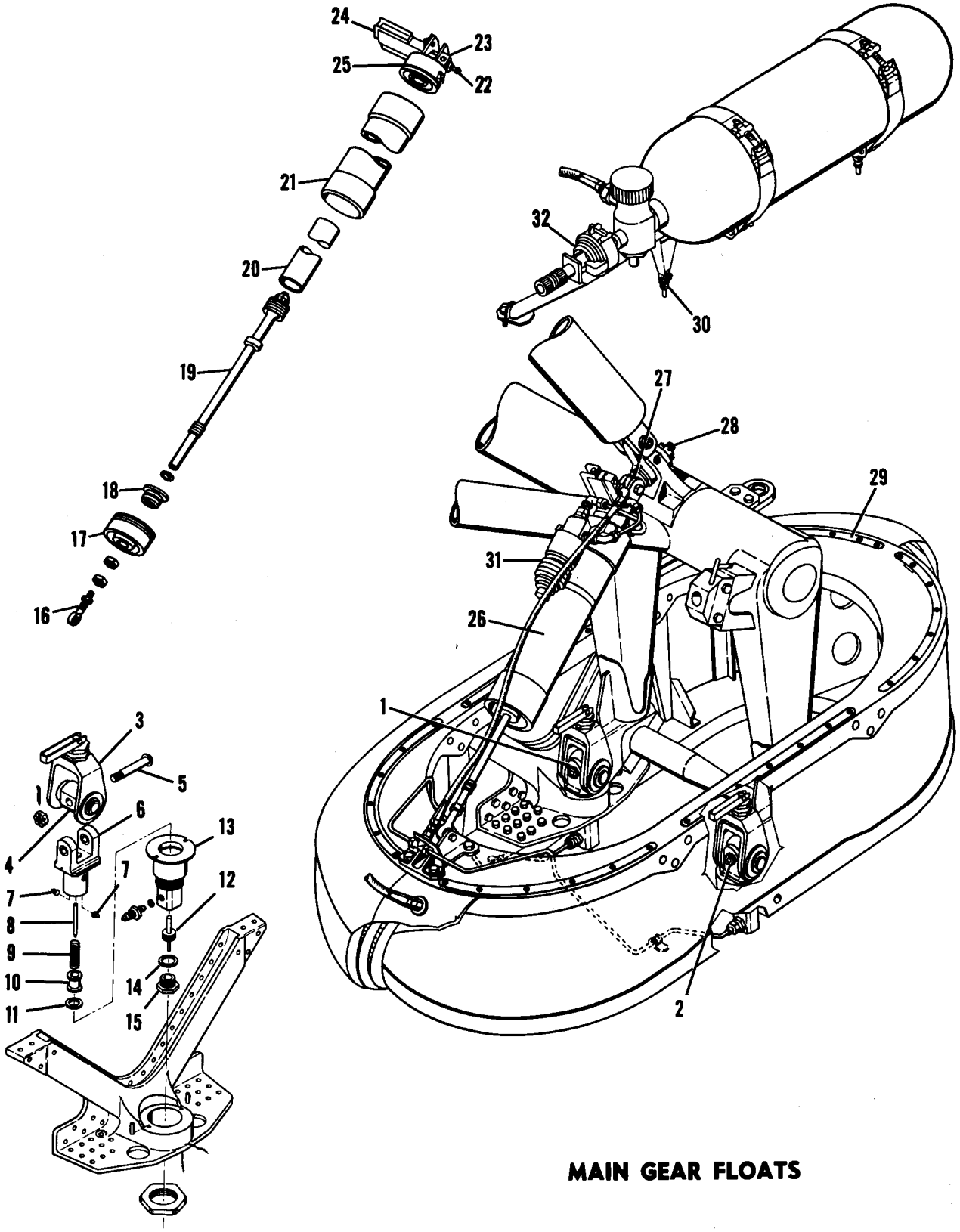

Figure 2-48. Flotation Equipment—YH-21 (Sheet 1 of 2)

NOMENCLATURE KEY FOR FIGURE 2-48 (Sheet 1 of 2)

1	Inboard Jettison Fitting
2	Outboard Jettison Fitting
3	Link Assembly
4	Trunnion
5	Float Retaining Pin
6	Link
7	Retaining Pins, two
8	Spring Guide
9	Spring
10	Collar Assembly
11	Retaining Ring
12	Piston
13	Housing
14	Retaining Ring
15	Plug
16	Rod End
17	Lower Cap
18	Gland
19	Piston Rod
20	Cylinder
21	Rigger Case
22	Check Valve
23	Inflation Valve
24	Release Valve
25	Upper Cap
26	Jettison Rigger
27	Centering Link
28	Eye Bolt
29	Float Support Structure
30	CO_2 Bottle Support
31	Jettison Solenoid
32	Inflation Solenoid

When flotation gear is installed, the rigger should be checked for proper inflation prior to flight to assure that sufficient pressure is present to permit jettisoning.

2-291. MAIN ALIGHTING GEAR FLOAT INSTALLATION—YH-21. (See figures 2-43 and 2-48.) Install the floats on the main alighting gear as follows:

Note

Always jack up the alighting gear when installing the floats. Attempting to install the floats by removing the shock strut will require forcing the V-brace beyond its normal limit of travel.

a. Jack up the main alighting gear until there is sufficient clearance to permit passage of the float structure under the alighting gear fork.

b. Remove the outer axle nut (13, figure 2-43) and loosen the inner axle nut (20). Remove the axle cap bolts (7 and 7A) and axle caps (6) from the fork legs, and lower the wheel assembly.

c. Straighten the tangs on the lock washer (16) and loosen the lock nut (15) and thrust nut (17). Remove the thrust collar (14) and replace it with a special thrust collar provided with the kit.

d. Raise the wheel assembly into position and replace the axle caps, axle cap bolts, and outer axle nut. Do not tighten the axle cap bolts.

e. Remove the float retaining pins (5, figure 2-48) from the link assemblies (3). Install one link assembly on each float extension fitting of the alighting gear fork.

Note

The bolt assemblies in the link assemblies contain spring-loaded pins which lock the link assemblies to the float extension fittings. Raise the pin handles to permit installation of the link assemblies.

f. Adjust the special thrust collar and thrust nut until the float retaining pins can be inserted without forcing. Secure the thrust nut with the lock nut and bend over a tang of the lock washer. Tighten the axle cap bolts and lockwire. Secure the axle nuts with cotter pins.

CAUTION

Bolts (7 and 7A, figure 2-43) carry the same basic part number; however, they are identified by different dash numbers. The -1 bolt (7) is two inches long and is used to secure the cap to the outboard leg of the fork. The -2 bolt (7A) is 2-1/8 inches long and secures the cap to the inboard leg of the cap. Do not install the -2 bolt in the outboard leg of the fork as the bolt may bottom in the bolt hole, preventing the cap from securing the axle in place.

g. Lower the pin handles to lock the link assemblies to the extension fittings. Tighten the bolt assemblies sufficiently to obtain a firm seating of the link assemblies on the extension fittings. Lock the bolt in position with the check nut and lockwire the pin handle to the link.

h. Raise the float structure (29, figure 2-48) until the lugs on the jettison fittings (1 and 2) pass around the links. Align the holes in the mounting lugs and links and insert the retaining pins.

i. Remove the bolt attaching the shock strut to the alighting gear fork and replace it with the special eye bolt (28). Attach the centering link (27) to the eye bolt.

j. Raise the handle of the disconnect valve on the rigger until the piston is retracted. Place the rigger on the centering link and lower the disconnect valve handle so that the piston engages the hole in the link. Lockwire the handle to the valve body.

k. Connect the rigger piston rod to the bracket on the float support structure. Inflate the rigger to 625 psi pressure as shown on the name plate.

l. Clamp the jettison solenoid valve (31) to the rigger case. Install and connect all tubing and hoses.

m. Mount the CO_2 bottle on the support (30) and secure in position with the two straps. Connect the inflation solenoid valve and tubing. Complete the electrical connections.

n. Lubricate as directed in the Periodic Lubrication Chart.

CAUTION

When lubricating the alighting gear fittings, care must be taken not to get grease on the floats. Remove any grease spots as they will damage the float material.

2-292. REMOVAL. (See figures 2-43 and 2-48.) The procedure for removing the flotation equipment is the reverse of the installation procedure. If the floats have been inflated, deflate them by opening the deflation valve at the front of the float. Close the valve each time the float is deflated.

CAUTION

Do not use the jettison system to remove the flotation equipment. To do so requires that the helicopter be flown to gain sufficient ground clearance. Rotor blade down wash is sufficient to blow the flotation equipment about, resulting in serious damage to the float and supporting structure.

2-292A. NOSE ALIGHTING GEAR FLOAT INSTALLATION—YH-21. (See figures 2-44 and 2-48.) The nose alighting gear float is installed in the following manner:

a. Jack up the helicopter at the forward jacking points until sufficient clearance is obtained to permit installation of the float support structure.

b. Remove the axle cap bolts (20 and 22, figure 2-44) and the axle caps (19 and 21). Lower the wheel and axle from the fork.

c. Remove the axle nuts (23 and 30) and the thrust collar (24) from the axle (28). Replace the thrust collar with a special thrust collar provided with the kit.

d. Raise the wheel assembly into position and replace the axle caps, axle cap bolts, and axle nuts. Do not tighten the axle cap bolts.

e. Remove the float retaining pins (4, figure 2-48) from the link assemblies (3). Install one link assembly on each float extension fitting of the alighting gear fork.

NOMENCLATURE KEY FOR FIGURE 2-48 (Sheet 2 of 2)

1	Float Support Structure
2	Axle Nut
3	Link Assembly
4	Float Retaining Pin
5	Link
6	Retaining Pin
7	Spring Guide
8	Spring
9	Collar Assembly
10	Retaining Ring
11	Housing
12	Piston
13	Plug
14	Jettison Fitting Support
15	Nut
16	Float Bag
17	Cover
18	Jettison Rigger
19	Jettison Solenoid
20	Rod End Bearing
21	Lower Cap
22	Gland
23	Piston Rod
24	Piston
25	Cylinder
26	Rigger Case
27	Upper Cap
28	Disconnect Valve
29	Inflation Solenoid
30	CO_2 Bottle
31	CO_2 Bottle Support
32	Mounting Pad
33	Centering Link

Note

The bolt assemblies in the link assemblies contain spring-loaded pins which lock the link assemblies to the float extension fittings. Raise the pin handles to permit installation of the link assemblies.

f. Adjust the special thrust collar and thrust nut until the float retaining pins can be inserted without forcing. Secure the thrust collar and thrust nut with the lock nut and bend over a tang of the lock washer. Tighten the axle cap bolts and lockwire. Secure the axle nuts with cotter pins.

g. Lower the pin handles to lock the link assemblies to the extension fittings. Tighten the bolt assembly sufficiently to obtain a firm seating of the link assembly on the extension fitting. Lock the bolt in position with the check nut and lockwire the pin handle.

h. Raise the float structure (1) until the lugs on the jettison fittings engage the links. Align the holes in the mounting lugs and links and insert the retaining pins.

i. Attach the rigger mounting pad (32) to the wheel fork and install the centering link (33).

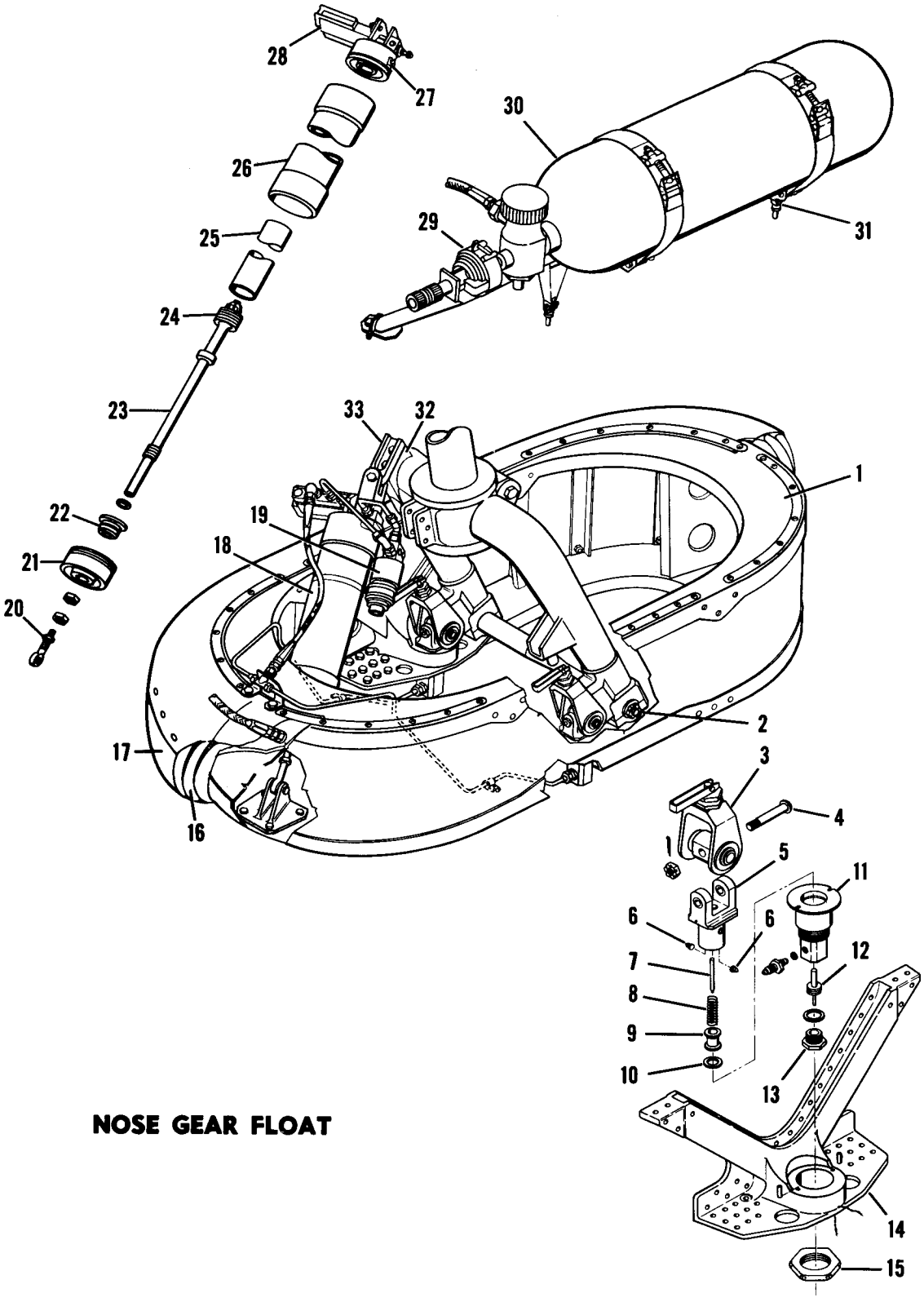

Figure 2-48. Flotation Equipment—YH-21 (Sheet 2 of 2)

j. Raise the handle of the rigger disconnect valve (28, figure 2-48) until the piston is retracted. Place the rigger on the centering link and lower the disconnect valve handle so that the piston engages the hole in the link. Safety wire the handle to the valve body.

k. Connect the piston rod to the bracket on the float support structure. Inflate the rigger (as directed in paragraph 1-84B) to 750 psi pressure.

l. Clamp the jettison solenoid valve (19, figure 2-48) to the rigger case. Install and connect all tubing and hoses.

m. Mount the CO_2 bottle on the support and secure in position with the two straps. Connect the inflation solenoid valve and tubing. Complete the electrical connections.

n. Lubricate as directed in the Periodic Lubrication Chart.

CAUTION

When lubricating the alighting gear fittings, care must be taken not to get grease on the floats. Remove any grease spots as they will damage the float material.

2-292B. REMOVAL. (See figures 2-44 and 2-48.) The procedure for removing the flotation equipment is the reverse of the installation procedure. If the float has been inflated, deflate it by opening the deflation valve at the front of the float. Close the valve each time the float is deflated.

CAUTION

Do not use the jettison system to remove the flotation equipment. To do so requires that the helicopter be flown to gain sufficient ground clearance and rotor blade down wash is sufficient to blow the flotation gear about, resulting in serious damage to the float and supporting structure.

2-292C. DISASSEMBLY, JETTISON FITTINGS —YH-21. (See figure 2-48.) Disassemble the jettison fittings in the following manner:

a. Remove the jettison fittings from the float support structure.

b. Remove the plug (15) from the bottom of the housing (13). Remove the tubing connection from the side of the housing.

c. Push the piston rod (12) upward until the retaining pins (7) drop back into the sleeve assembly (10), then pull the link (6) away from the housing.

d. Pull the piston (12) from the housing.

e. Remove the retaining ring (11) from the bottom of the link (6) and slide the sleeve (10), pins (7) and spring (9) from the link.

2-292D. ASSEMBLY, JETTISON FITTINGS—YH-21. (See figure 2-48.) Assembly of the jettison fittings is the reverse of the disassembly procedure. Replace any O-rings or gaskets which are worn or damaged.

Note

The O-ring in the piston and all surfaces of the groove should be coated with grease, Spec MIL-G-4343, before installation in the housing. Do not fill the groove with grease.

2-292E. MAIN ALIGHTING GEAR FLOAT INSTALLATION—H-21A. (See figures 2-46 and 2-49.) Install the floats on the main alighting gear of the H-21A helicopters in the following manner:

a. Remove the axle cap retaining nuts (1, figure 2-46) and axle caps (2) from the axle.

b. Remove the outboard AN177-34 bolt on the forward leg of the V-brace axle fitting. Attach float antichafing wedge assembly (35, figure 2-49) with the thickest part aft, using an AN177-36 bolt with the head down and inside the wedge. Use special washers (PHS153-1-7-16) as required under wedge and nut. Remove the cotter pin from the inboard bolt, and lockwire both ends of wedge to the bolt through the cotter pin hole.

c. Attach the link assembly (1) to the float support structure (2). Slide the link assembly onto the stub axle (27, figure 2-46). Replace the washer and nut and insert a cotter pin through the nut and axle.

d. Place washer assembly (3, figure 2-49), lock washer (5), lock nut (6), sleeve (4), link assembly (7) and washer (8) on the outboard end of the axle. Replace the axle cap retaining nut.

e. Attach the float support structure to the link assembly.

f. To make the final adjustment for lateral play, move the float support until the inboard link bottoms against the washer. Adjust the axle cap retaining nut until the washer (8) seats firmly against the outboard link assembly. Back off the nut as required to align the nut and cotter pin hole in the axle and insert a cotter pin.

g. Screw the sleeve (4) until it bears against the link assembly (7) without preload. Back off

the sleeve enough to line up the external tang of lock washer (5) with the slot in the washer assembly (3).

h. Tighten the lock nut (6) to eliminate lateral play in the wheel. Secure the lock nut and washer assembly (3) with lock washer (5).

i. Insert the eyebolt bushing in the hole in the shock strut and install the check nut. Slide the eyebolt (30) through the bushing and secure it with the washer and nut.

j. Attach the piston end of the jettison rigger (29) to the bracket on the float support structure. Raise the handle on the release valve (26) until the piston is retracted, then place the upper end of the rigger over the eyebolt. Align the holes and piston, then lower handle. This will lock the rigger in position. Lockwire the valve handle to the valve body.

k. Clamp the jettison valve to the rigger case. Install and connect all tubing. Inflate the rigger as directed in paragraph 1-84B to 950 psi.

l. Mount the CO_2 bottle on the support and secure in position with the two straps. Attach the CO_2 inflation solenoid valve (32) to the CO_2 bottle and connect the inflation lines to the floats. Complete the electrical connections.

m. Lubricate as directed in the Periodic Lubrication Chart.

CAUTION

When lubricating alighting gear fittings, care must be taken not to get grease on the floats. Remove any grease spots as they will damage float material.

2-292F. REMOVAL. (See figure 2-46 and 2-49.) The procedure for removing the flotation equipment is the reverse of the installation procedure. If the floats have been inflated, deflate them by opening the deflation valve at the front of the float. Close the valve each time the float is deflated.

CAUTION

Do not use the jettison system to remove the flotation equipment. To do so requires that the helicopter be flown to gain sufficient ground clearance. Rotor blade down wash is sufficient to blow the flotation gear about, resulting in serious damage to the float and supporting structure.

2-292G. NOSE ALIGHTING GEAR FLOAT INSTALLATION—H-21A. (See figures 2-47 and 2-49, sheet 2 of 2.) Install the nose alighting gear floats as follows:

a. Jack up the helicopter at the forward jacking points until sufficient clearance is obtained to permit installation of the float support structure.

b. Remove the wheel fork cap bolts (16, figure 2-47) and the caps (17). Lower the wheel and axle from the fork.

c. Remove the axle nuts (1) from the ends of the axle and remove the axle caps, sleeve (2) and bushing (4).

d. Thread sleeve (33, figure 2-49) onto the left end of the axle. Place a link assembly (3) on the right end of the axle. Secure the link assembly on the axle with axle nut (5) and cotter pin.

e. Place the remaining link assembly on the bushing (4) and thread the bushing into the sleeve (2) on the left end of the axle.

f. Raise the wheel and axle into position in the fork and replace the fork caps (17, figure 2-47) and bolts (16). Lockwire the bolts.

g. Attach the float support structure (1, figure 2-49) to the link assembly (3) on the right end of the axle.

h. Adjust the link assembly on the left end of the axle to match the attaching point of the float support structure. To move the link attaching point outboard, turn the sleeve (2). To move the link attaching point inboard, turn the bushing (4) at its hex head.

i. After aligning link assemblies and float attaching points, insert a cotter pin through the bushing (4) and axle. Attach the float support structure to the link assembly.

j. Adjust for lateral play in the wheel by adjusting nut (5, figure 2-47) as required. Lock the nut to the collar (7) with lock washer (6).

k. Install the rigger mounting fitting (32) on the nose wheel fork. Attach link (31) to the fitting.

l. Raise the handle of the disconnect valve (23) on the rigger until the piston is completely retracted. Position the link (31) between the rigger mounting lugs and lower the valve handle. Lockwire the handle to the valve body.

m. Attach the piston rod end of the rigger (26) to the mounting bracket on the float support structure. Inflate the rigger (as directed in paragraph 1-84B) to 600 psi pressure.

n. Clamp the jettison solenoid (27) to the rigger case. Install and connect all tubing and hoses.

o. Mount the CO_2 bottle on the support and secure in position with the two straps. Connect the inflation solenoid and tubing. Complete the electrical connections.

p. Lubricate as directed in the Periodic Lubrication Chart.

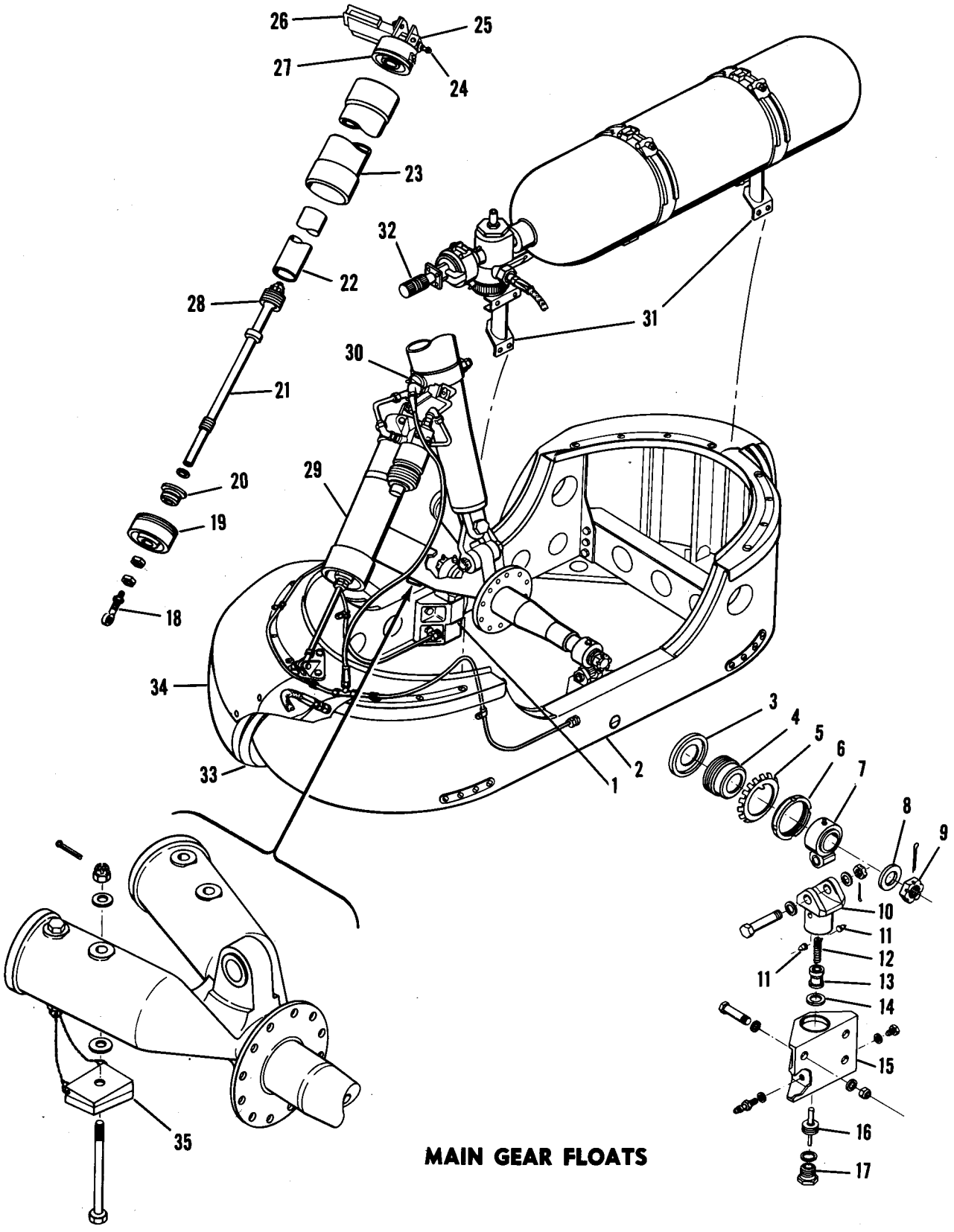

Figure 2-49. Flotation Equipment—H-21A (Sheet 1 of 2)

NOMENCLATURE KEY FOR FIGURE 2-49 (Sheet 1 of 2)

1 Inboard Link Assembly
2 Float Support Structure
3 Washer Assembly
4 Sleeve
5 Lock Washer
6 Lock Nut
7 Outboard Link Assembly
8 Washer
9 Axle Nut
10 Link
11 Retaining Pins, two
12 Spring
13 Collar Assembly
14 Retaining Ring
15 Housing
16 Piston
17 Plug
18 Rod End
19 Lower Cap
20 Gland
21 Piston Rod
22 Cylinder
23 Rigger Case
24 Check Valve
25 Inflation Valve
26 Release Valve
27 Upper Cap
28 Piston
29 Jettison Rigger
30 Eyebolt
31 CO_2 Bottle Support
32 Inflation Solenoid Valve
33 Float
34 Float Cover
35 Float Antichafing Wedge Assembly

CAUTION

When lubricating alighting gear fittings, care must be taken not to get grease on the floats. Remove any grease spots as they will damage the float material.

2-292H. REMOVAL. (See figures 2-47 and 2-49.) The procedure for removing the flotation equipment is the reverse of the installation procedure. If the float has been inflated, deflate it by opening the deflation valve at the front of float. Close the valve each time the float is deflated.

CAUTION

Do not use the jettison system to remove the flotation equipment. To do so requires that the helicopter be flown to gain sufficient ground clearance and rotor blade down wash is sufficient to blow the flotation gear about, resulting in serious damage to the float and supporting structure.

2-292I. DISASSEMBLY, JETTISON FITTINGS —H-21A. (See figure 2-49.) Disassembly of the jettison fittings is accomplished in the following manner:

a. Remove the jettison fittings from the float structure.

b. Remove the tubing connection from the side of the housing (11). Remove the plug (13) from the bottom of the housing.

c. Push the piston (12) upward until the retaining pins (7) drop into the collar assembly (9). Pull the link (6) from the housing (11).

d. Pull the piston (12) from the housing.

e. Remove the retainer ring (10) from the bottom of the link (6) and slide out the collar assembly (9), pins (7) and spring (9).

2-292J. ASSEMBLY, JETTISON FITTINGS—H-21A. (See figure 2-49.) Assembly of the jettison fittings is the reverse of the disassembly procedure. Replace any O-rings or gaskets which are worn or damaged.

Note

The O-ring in the piston and all surfaces of the groove should be coated with grease, Spec MIL-G-4343, before installation in the housing. Do not fill the groove with grease.

2-292K. DISASSEMBLY, RIGGER — FLOTATION EQUIPMENT. (See figure 2-49.) Disassemble the float rigger as follows:

WARNING

Release all air in rigger as directed in paragraph 1-84B before disassembling.

a. Remove the two bolts which attach the disconnect valve (23) to the rigger upper cap (22). Remove the valve.

b. Remove the pressure check valve and the inflation valve from the cap. Remove the four bolts which secure the cap to the rigger case and remove the cap.

c. Remove the rod end bearing (15) from the piston rod (18). Remove the four bolts which secure the lower cap (16) to the rigger case.

d. Pull the lower cap (16), gland (17), piston rod (18) and cylinder (20) from the rigger case (21).

e. Slide the cylinder from the piston rod. Pull the piston rod (18) from the gland (17) being careful not to damage the O-rings, scrapers and wipers installed in the gland.

f. Remove the nut holding the piston on the piston rod and remove the piston (19).

g. Remove the cotter pin and washer attaching the handle of the rigger release valve to the release valve piston. Remove the handle.

h. Remove the set screw, spring and ball from the release valve cylinder.

i. Remove the retainer ring from the release valve cylinder and pull the plug and piston from the cylinder.

2-292L. ASSEMBLY. (See figure 2-49.) The procedure for assembling the rigger and release valve is the reverse of the disassembly procedure. Replace all O-rings, scrapers, and packings which may be damaged or worn.

2-293. FLOAT BAG AND COVER INSTALLATION. The main alighting gear of the YH-21 and the nose gear of the YH-21 and H-21A helicopters requires installation of a circular float bag (usually referred to as a do-nut float because of its shape when inflated). The H-21A main alighting gear requires installation of a float bag (sometimes referred to as a shrimp float because of its shape) cut away to clear the V-brace. Both types of float bags and covers are fastened to the float support structures as follows:

a. Remove the CO_2 bottle support assembly from the float support structure to enable the float to be turned over with the bottom side up.

b. Align the bolt holes in the float bag girt with those in the bottom of the float support structure and float cover.

c. Mount the cover and float bag to the support structure with the lower ring and clamp plates on the outside. Attach the upper float bag cover to the top of the support structure.

d. Fold the float bag in accordance with the steps outlined in the following applicable paragraphs.

e. Reinstall the CO_2 bottle support assembly on the float support structure.

2-293A. FLOAT BAG (DO-NUT TYPE) FOLDING PROCEDURE. (See figure 2-50.)

a. Do-nut type float bags do not have to be removed from the alighting gear to be folded and, therefore, will not require the removal of the CO_2 bottle support assembly.

b. Deflate float by opening the deflation (mattress) valve. The float should be flat; however, enough air should be left in the float so that wrinkles in the fabric can be smoothed out. The flexible hose should not be hidden within the folds of the float. (Refer to illustration for positioning of hose while float is being folded.)

c. Smooth the float out as shown in view A, with the skirt of the cover above and the fabric ring to which it attaches, on the bottom. The girt and reinforcements will be bent up against the support.

d. On main gear floats, feel through the cover for the inside diaphragm at the indent provided for the struts and pull it over toward the side of the float and away from the end.

NOMENCLATURE KEY FOR FIGURE 2-49 (Sheet 2 of 2)

1	Float Support Structure	17	Gland
2	Thrust Sleeve	18	Piston Rod
3	Link Assembly	19	Piston
4	Thrust Bushing	20	Cylinder
5	Axle Nut	21	Rigger Case
6	Link	22	Upper Cap
7	Retaining Pins	23	Disconnect Valve
8	Spring	24	Float Bag
9	Collar Assembly	25	Float Cover
10	Retainer Ring	26	Jettison Rigger
11	Housing	27	Jettison Solenoid
12	Piston	28	CO_2 Bottle Support
13	Plug	29	Inflation Valve
14	Bolt	30	CO_2 Bottle
15	Rod End	31	Centering Link
16	Lower Cap	32	Rigger Mount Pad
		33	Sleeve

e. With the float as smooth as possible, suck out the remaining air with the suction side of a vacuum cleaner.

f. Start folding the float from the curved ends as shown in view B, taking care to get each end of the float folded so that the folds are the same height as the support.

g. Fold the ends in toward the sides as shown in view C until the narrow outside end is about one foot wide.

h. Starting at one narrow end, roll this up until it lies against the side of the float support as shown in view D. Repeated tries may be necessary to get the height of the roll the same as the height of the support. Roll the other side the same way.

i. Pull down the skirt of the cover and snap the vertical openings closed; then snap the cover to the bottom ring.

Note

It will help to locate the manifold by tying a string to it which will hang outside the case after the float is folded. The flexible hose from the cylinder discharge valve can then be led through the hole provided and hooked up to the manifold.

2-293B. FLOAT BAG (SHRIMP TYPE) FOLDING PROCEDURE. (See figure 2-51.)

a. Remove the CO_2 bottle support assembly from the float support structure to enable the float to be turned over with the bottom side up.

Note

Removing the CO_2 bottle support assembly will expedite the folding of the float bag and will prevent damage to the CO_2 bottle support straps.

b. Partially inflate the float bag to remove any creases or wrinkles.

c. Open the mattress valve and deflate the bag.

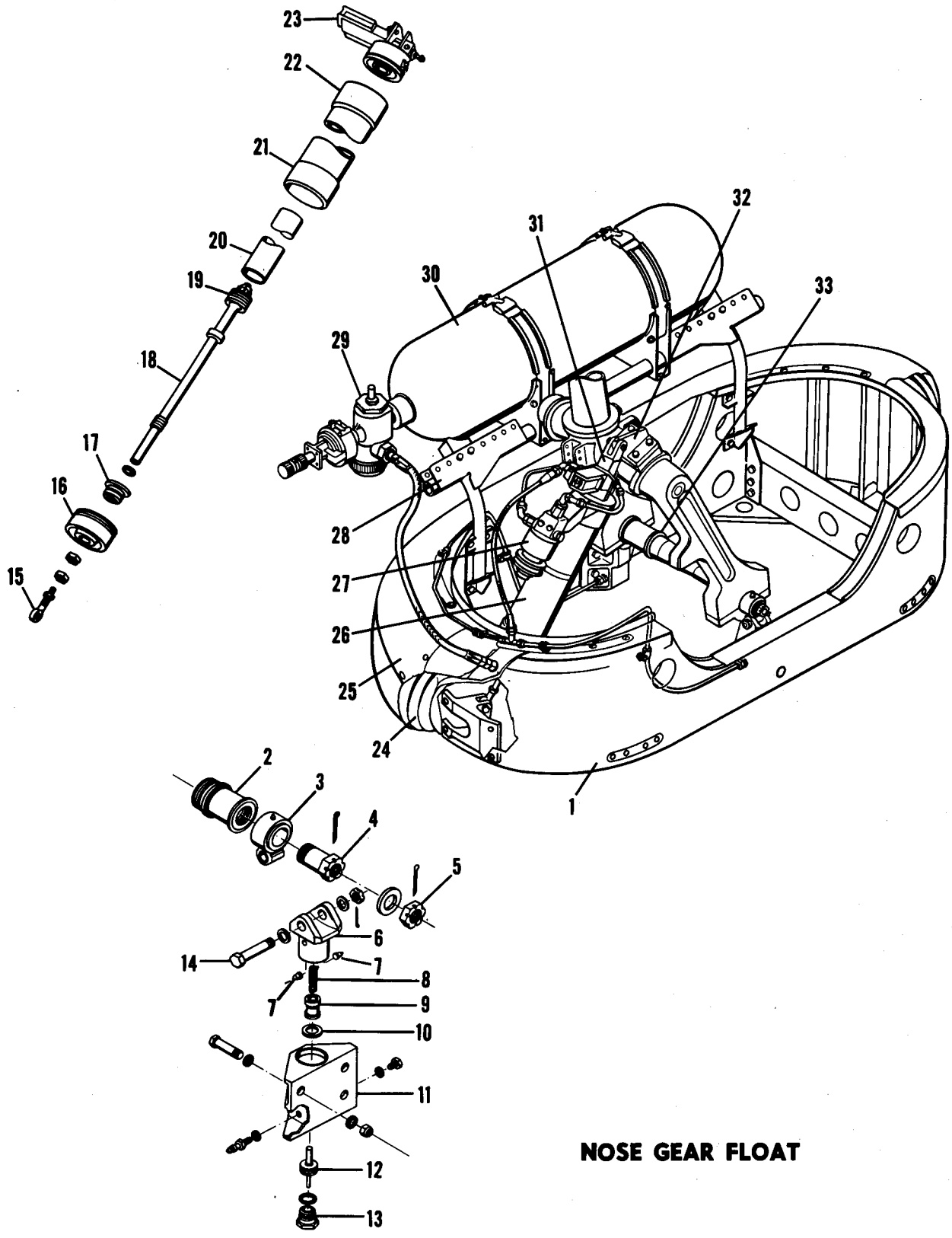

Figure 2-49. Flotation Equipment—H-21A (Sheet 2 of 2)

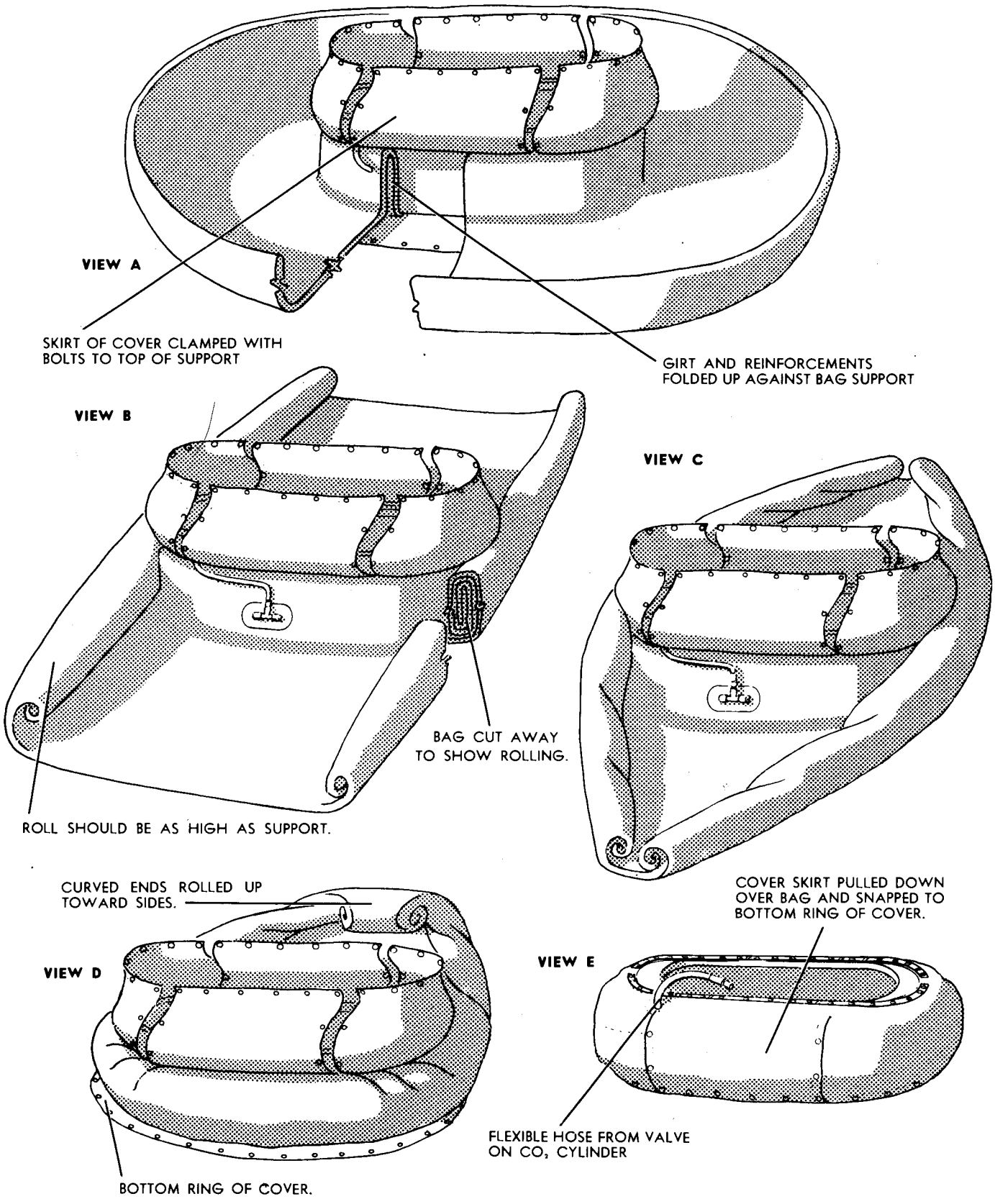

Figure 2-50. Float Bag (Do-Nut Type) Folding Procedure

d. Remove the remaining air with a vacuum cleaner or other suitable means.

Note

It is important that *all* of the air be removed to expedite the folding of the float bag and to achieve a neat, compact package. A good indication that all of the air has been removed is when the edges of the bag begin to curl up and fold over (view B).

e. If a loop forms where the fabric of the bag drapes over the support structure, usually at the aft end, discontinue vacuuming because the suction creates the loop by making the bag adhere to the support structure. This loop will make buttoning of the covers difficult and will decrease ground clearance when the float is installed on the alighting gear. To eliminate the loop, place the float support structure on two blocks of wood. Place a heavy plank, one that will not split or splinter under pressure, across the edge of the float support, making sure that none of the cover buttons are caught between the plank and support structure. Clamp one or more C-clamps to the plank and to a piece of wood inserted inside the support structure, which will prevent damaging the structure when tightening the clamps. Force the fabric of the bag down and tighten the clamps. Continue vacuuming for several minutes and then close the mattress valve. Remove the clamps, the plank, and the two blocks of wood under the float support structure. Open the mattress valve and continue vacuuming until it is apparent that all air has been removed from the bag, then close the mattress valve.

f. Roll the aft inboard side of the bag in tightly against the support structure at a 45-degree angle (view C).

g. Roll the forward inboard side of the bag in tightly against the support structure at a 45-degree angle (view D).

h. Fold the two rolls toward the center, as shown in view E, overlapping one roll across the other roll, to form a point (view F).

i. Roll the formed point of the bag in tightly against the support structure, as shown in view G.

Note

It may be necessary to tie the bag in several places during the folding operation to prevent the bag from unfolding and to help in fastening the buttons of the cover.

j. Work the covers over the bag and fasten the snap buttons in place.

k. Reinstall the CO_2 bottle support assembly on the float support structure.

2-294. COLD WEATHER INFLATION. Rapid inflation of the floats during cold weather is slow because, while the carbon dioxide will flow freely from the inflating cylinder to the floats, it arrives at the floats in a liquid form and must then warm up and expand. Therefore, when overwater flights or any flights requiring use of the floats are anticipated, it is recommended that the floats be inflated with air before take-off. If the floats are inflated on the ground, the CO_2 cylinders may be removed from the float structure thereby decreasing weight by approximately 150 pounds.

CAUTION

If the floats have been ground inflated and the CO_2 cylinders are still installed, do not attempt to "top-off" the floats with the CO_2 inflation system. Such action will result in bursting the float bag, since the relief valve cannot discharge the excess pressure quickly enough to compensate for the pressure increase.

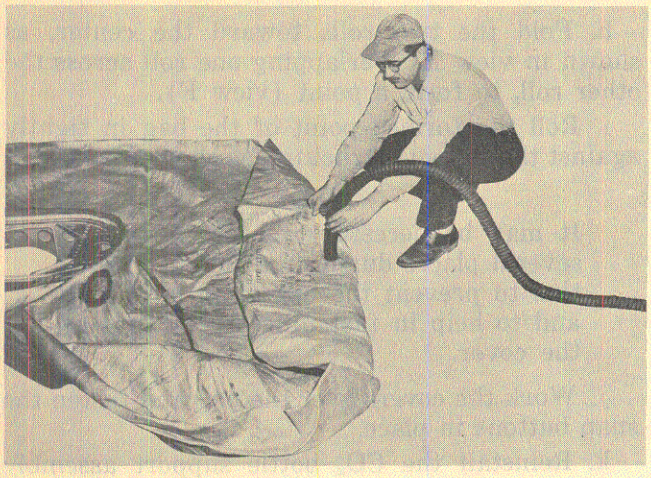

View A. Air Being Removed

View B. Edges of the Bag Curled up and Folded Over

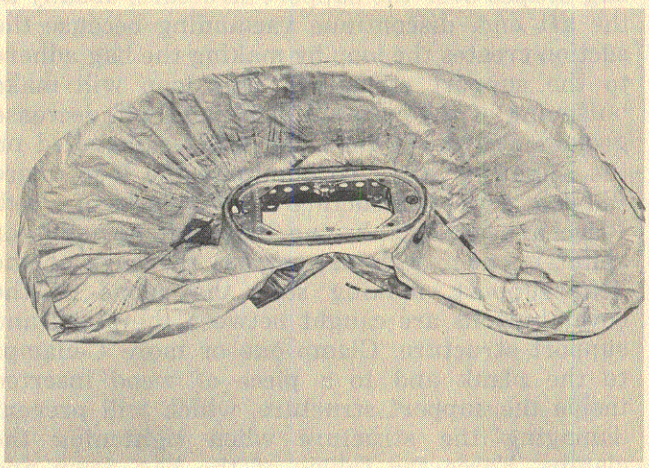

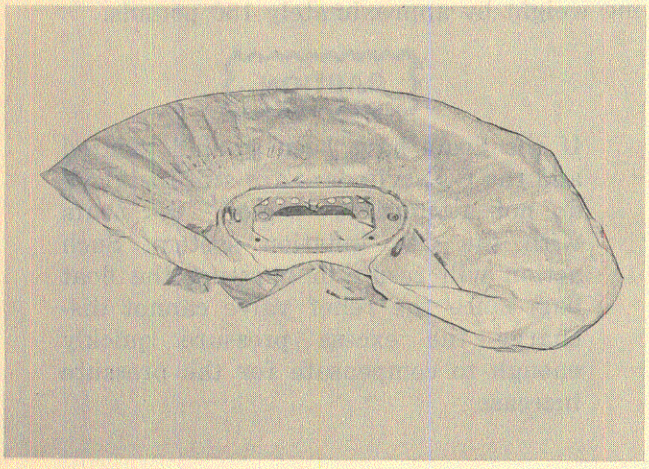

View C. Aft Inboard Side of Bag Rolled In Against the Support Structure

View D. Forward Inboard Side of Bag Rolled In Against the Support Structure

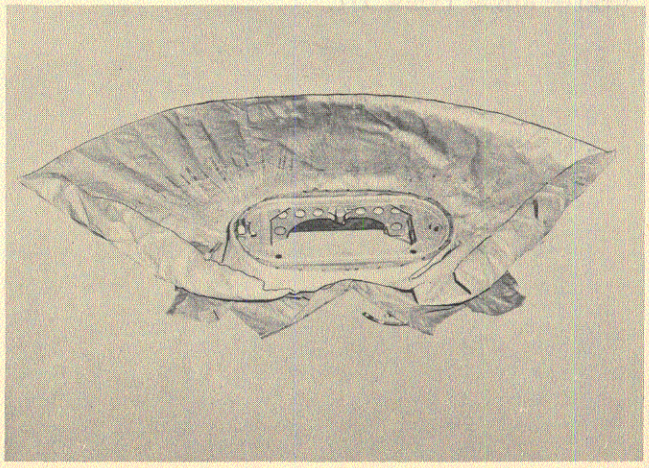

Figure 2-51. Float Bag (Shrimp Type) Folding Procedure (Sheet 1 of 2)

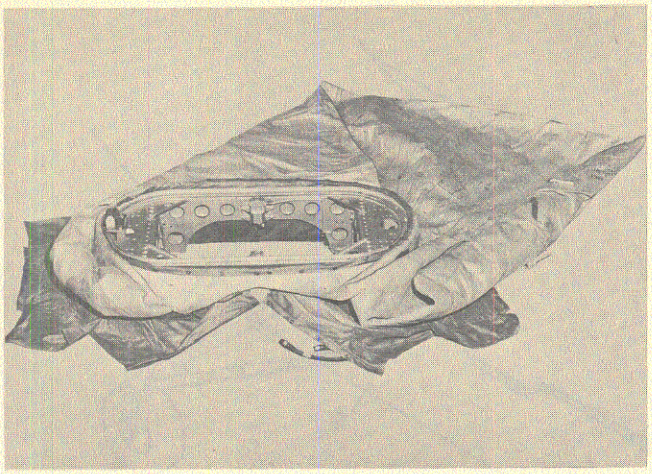

View E. Aft Roll Folded Toward the Center

View F. Forward Roll Folded Toward the Center Overlapping the Aft Roll to Form a Point

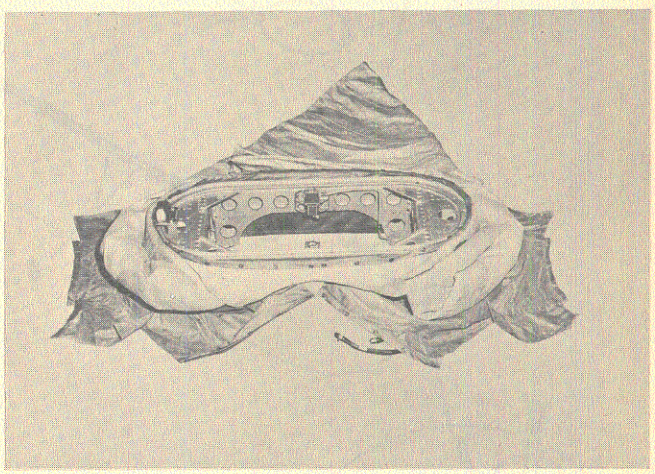

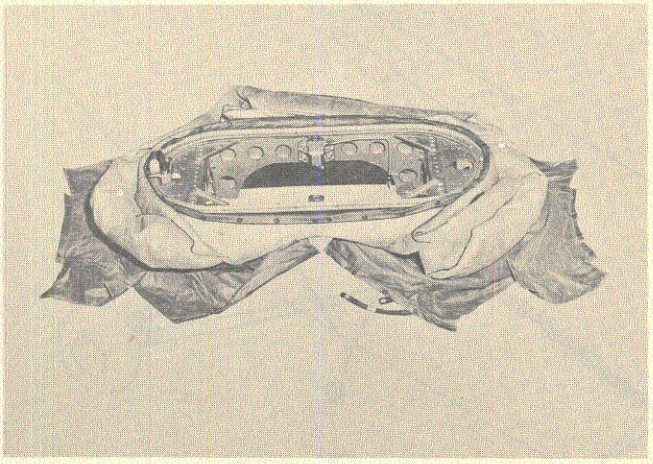

View G. Point Rolled In Against the Support Structure

View H. Covers Fastened and Float Ready For Installation of the CO_2 Bottle Supports

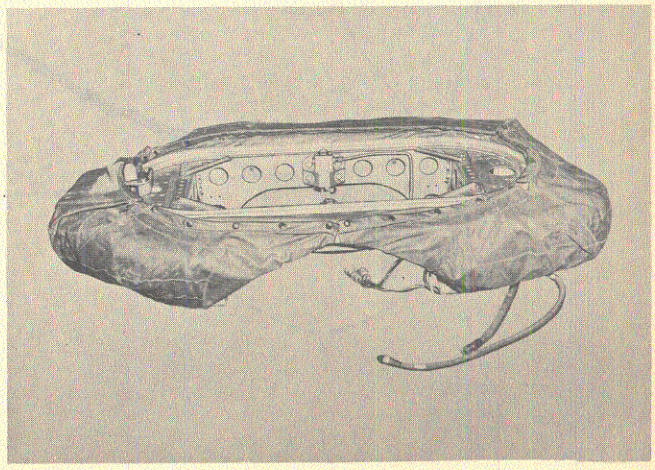

Figure 2-51. Float Bag (Shrimp Type) Folding Procedure (Sheet 2 of 2)

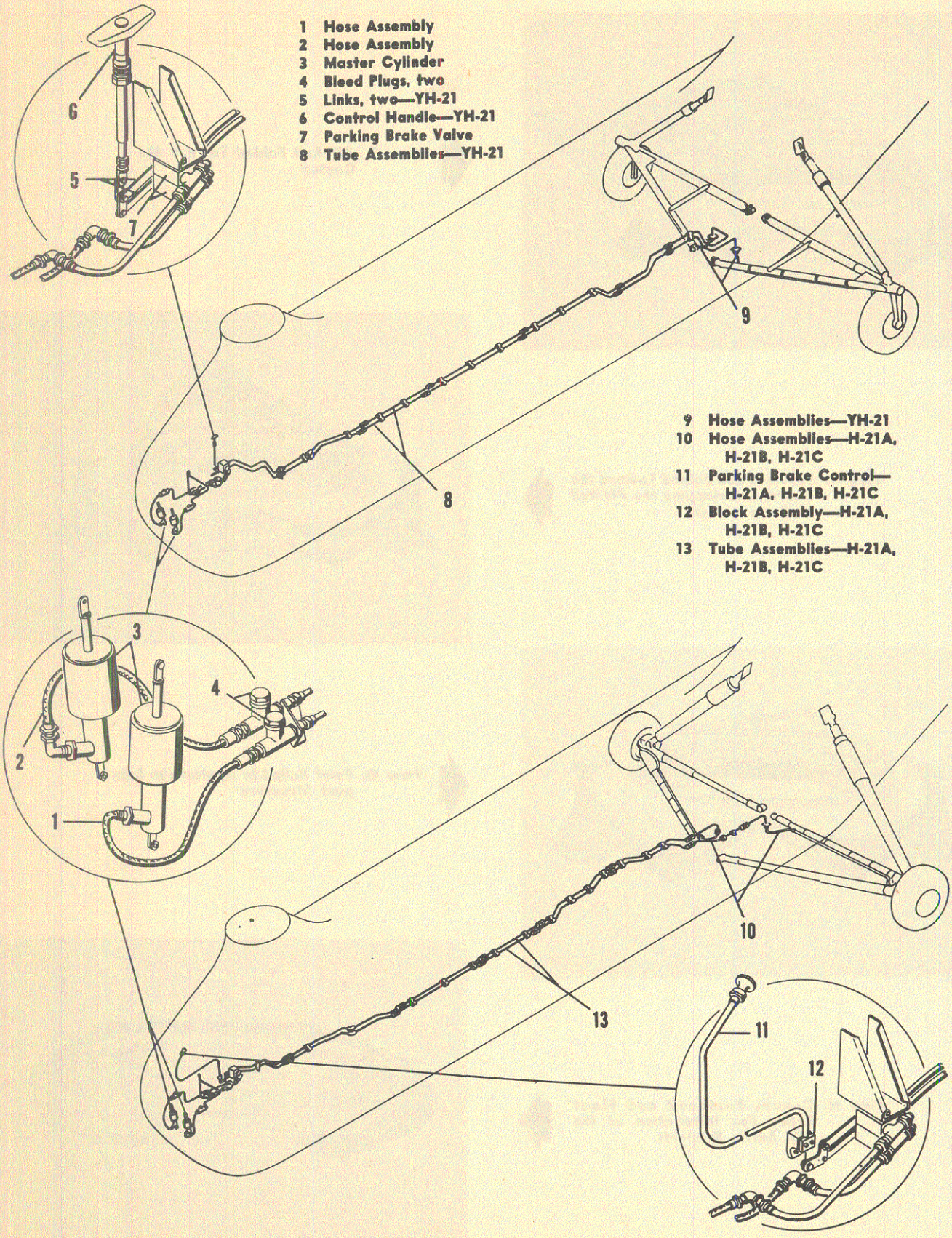

Figure 3-1. Hydraulic Brake System

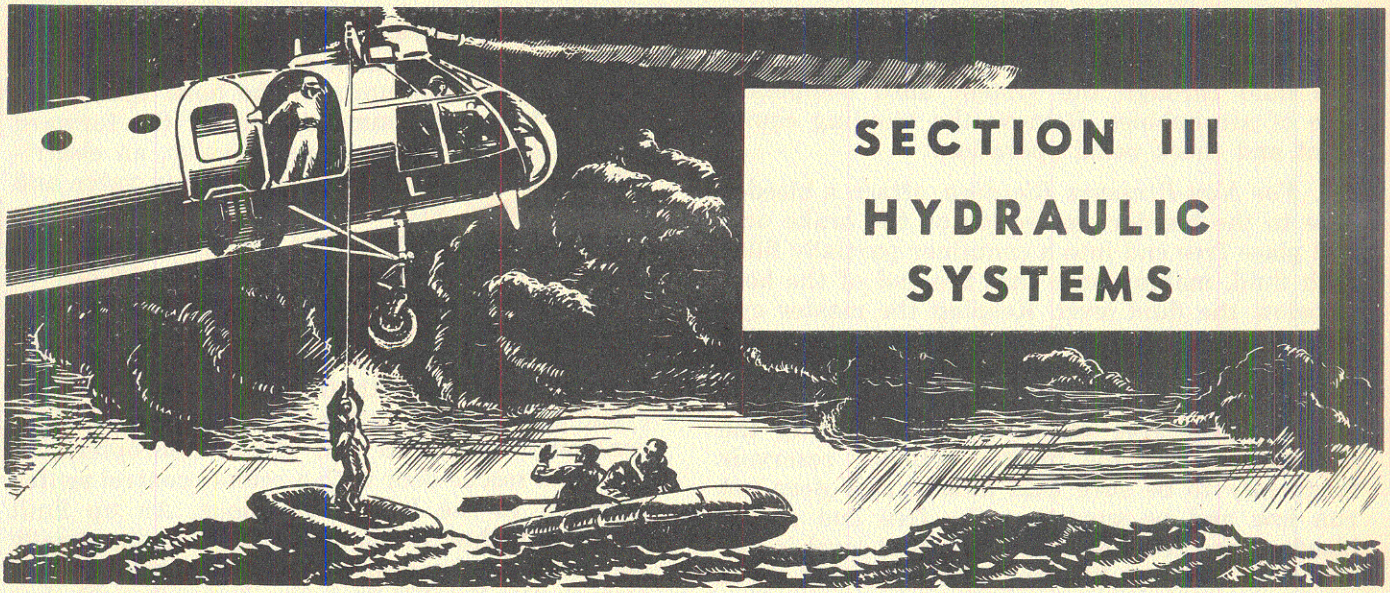

SECTION III
HYDRAULIC SYSTEMS

CONTENTS

Par.		Page
3-1.	**Hydraulic Brake System**	129
3-7.	**Rescue Hoist System**	130
3-11.	Rescue Hoist Four-Way Valve and Switches	133
3-14.	Flow Control Valve	133
3-18.	Hoist Pump and Relief Valve	135
3-22.	Hoist	135
3-26.	Cable Cutter	135
3-28.	Reservoir and Filters	135
3-31.	Rescue Hoist Kit—H-21B, H-21C	136
3-33.	Hydraulic Test Outlets	136
3-35.	**Hydraulic Flight Control System**	136
3-39.	Flight Controls Pump	138
3-42.	Pressure Relief Valve	138
3-46.	Accumulator and Air Gage	140A
3-50.	Flight Control Actuators	141
3-53.	Hydraulic Flight Control Shut-Off Valve	141
3-56.	System Pressure Gage	142
3-59.	Filter	142

3-1. HYDRAULIC BRAKE SYSTEM.

3-2. DESCRIPTION. (See figure 3-1.) The brake system consists of a single disc type brake operating on each main alighting gear wheel. These two brakes can be operated individually or together from master cylinders attached to the pilot's directional pedals (figure 3-2). Steering is accomplished by depressing the toe of either the pilot's left or right pedal. *Moderate deceleration* is accomplished by depressing the toes of both pedals simultaneously. For parking, a parking valve is provided. When both pedals are depressed fully and pressure is constant, the parking valve control handle (6 or 11, figure 3-1) is operated; this prevents the fluid from returning to the cylinder reservoirs. The wheel brakes cannot be operated from the co-pilot's seat. The two master cylinders are mounted in the cockpit, forward of the pilot's pedals. Hydraulic lines extend to the parking valve beneath the cockpit floor and from there to the hinge point of the main alighting gear V-strut. The lines are clamped to the V-strut and attach to the brake unit at each wheel. The parking valve handle is mounted in the cockpit floor immediately to the right of the pilot.

3-3. REMOVAL AND INSTALLATION. Removal and installation of the wheel and brake unit is outlined under Main Alighting Gear, Section II.

3-4. ADJUSTMENT AND BLEEDING. The single disc brake is so designed that the brake clearance will remain constant; therefore, the brake pedal remains in the same position under any degree of brake wear thus eliminating adjustment during the life of the brake.

Note

Either of two methods for bleeding the brake system may be used depending upon the equipment available and individual preference. The pressure method requires the use of a pressure tank while the non-pressure method requires only a container for the fluid and a bleeder hose.

3-5. *For Pressure Bleeding,* connect the pressure bleeder tank to the bleeder connection on the brake unit, making sure that the tank contains enough hydraulic fluid to fill the system. Attach a hose to the fill port on the top of the master

cylinder reservoir, and insert free end into an open container. Apply pressure to the tank and run fluid through the system until completely free of air bubbles. Remove the bleeding equipment and check pedal operation.

3-6. *For Non-Pressure Bleeding,* attach a bleeder hose to the bleeder connection on the brake unit and place free end into a container partially filled with fluid, making sure that the end of the hose is below the fluid level. Keeping the master cylinder reservoir full of fluid, apply pressure to the pedal quickly, then release pedal slowly. Repeat the process until the fluid entering the container is completely free of air bubbles. During the operation, check the master cylinder reservoir frequently to be sure that fluid supply does not run low and be sure that the free end of the bleeder hose remains below the fluid level in the container. Remove bleeding equipment and check pedal operation.

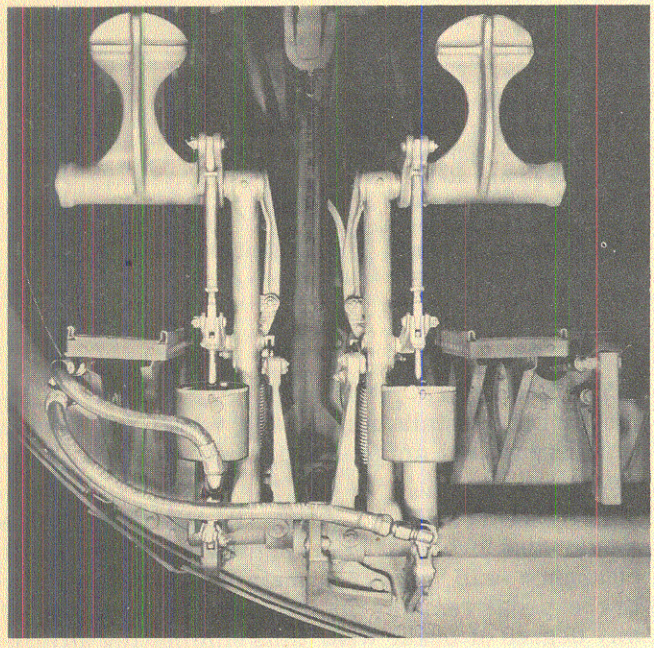

Figure 3-2. Brake Master Cylinders

3-7. RESCUE HOIST SYSTEM.

3-8. DESCRIPTION. (See figures 3-3, 3-4 and 3-5.) A hydraulic rescue hoist is provided on the YH-21 and H-21A helicopters for raising or lowering material or personnel while the helicopter hovers. The H-21B and H-21C helicopters are equipped with all of the hydraulic lines and controls necessary for operation of a rescue hoist, but the boom and winch are supplied in kit form with every fourth production helicopter of the H-21B series and every fifth production helicopter of the H-21C series. The winch has a capacity of 100 feet of 1/8-inch cable and is capable of lifting 400 pounds. Other units in the hoist system include a hydraulic pump driven by the forward transmission, a pressure relief valve, an electrically and/or manually operated 4-way valve and a flow control valve. On H-21C helicopters[40], a hydraulic motor driven fuel pump, an electrically operated selector valve, and a check valve are included in the hoist system. The hydraulic motor is driven by the return flow from the hoist 4-way selector valve. The hoist may be controlled from the cockpit with the switch on the pilot's cyclic stick, or the switch on the auto-pilot flight controller on H-21B and H-21C helicopters, or from the rescue door with a remote control switch mounted to the left of the door. An up limit switch attached to the hoist boom automatically de-energizes the system when the cable is rewound. On the YH-21 helicopters after 80 feet of cable has been unwound from the drum, a yellow section of cable, approximately five feet in length, becomes visible. This is followed by a red and white striped section, also five feet in length. The striped section serves as a warning to the hoist operator that the cable is nearly unwound, and reel out must be *stopped* at this point to prevent reverse winding of the cable on the hoist drum. The H-21A helicopters have a down limit switch mounted on the cable cutter block, de-energizing the system when tripped by a ball attached to the hoist cable, preventing complete unwinding of the cable. On the H-21B and H-21C helicopters a down limit switch is installed which is actuated when the end of the cable is reeled on the drum, thus removing the electrical power from the down solenoid and preventing the cable from reverse winding on the drum. The system can be manually controlled should the helicopter electrical system fail. A hydraulic reservoir, line filter and check valve[16] are common to both the hoist and flight control systems.

3-9. TESTING. The rescue hoist system should be given a functional check periodically and whenever a new unit is installed in the system.

Note

Testing at less than the specified limits will result in faulty operation of the system. When using an external hydraulic test unit, the flow requirements of the test unit, shown on the back of the test outlet cover, must be maintained. If the helicopter hydraulic system is to be used, the engine should be run at a minimum of 1500 rpm to provide satisfactory operating pressure.

[16] Ser No. 51-15256 and subsequent.

[40] Ser No. 56-2015 and subsequent.

a. Attach auxiliary hydraulic test unit to hoist system test outlets (figure 3-8), located on the left side of the fuselage just aft of the cockpit, and circulate fluid through the system.

b. Operate the 4-way valve. Any air which may be trapped in the lines will pass to the hoist and from there to the return line leading to the reservoir and will be expelled through the vent line. Operate the 4-way valve intermittently through complete cycles in order to purge the system of all air.

c. Disconnect the test unit and check the fluid level in the reservoir. It should be at the middle of the sight glass.

Note

When checking the reservoir, be sure there is zero hydraulic pressure in the flight control system. Hydraulic pressure in the system indicates there is a

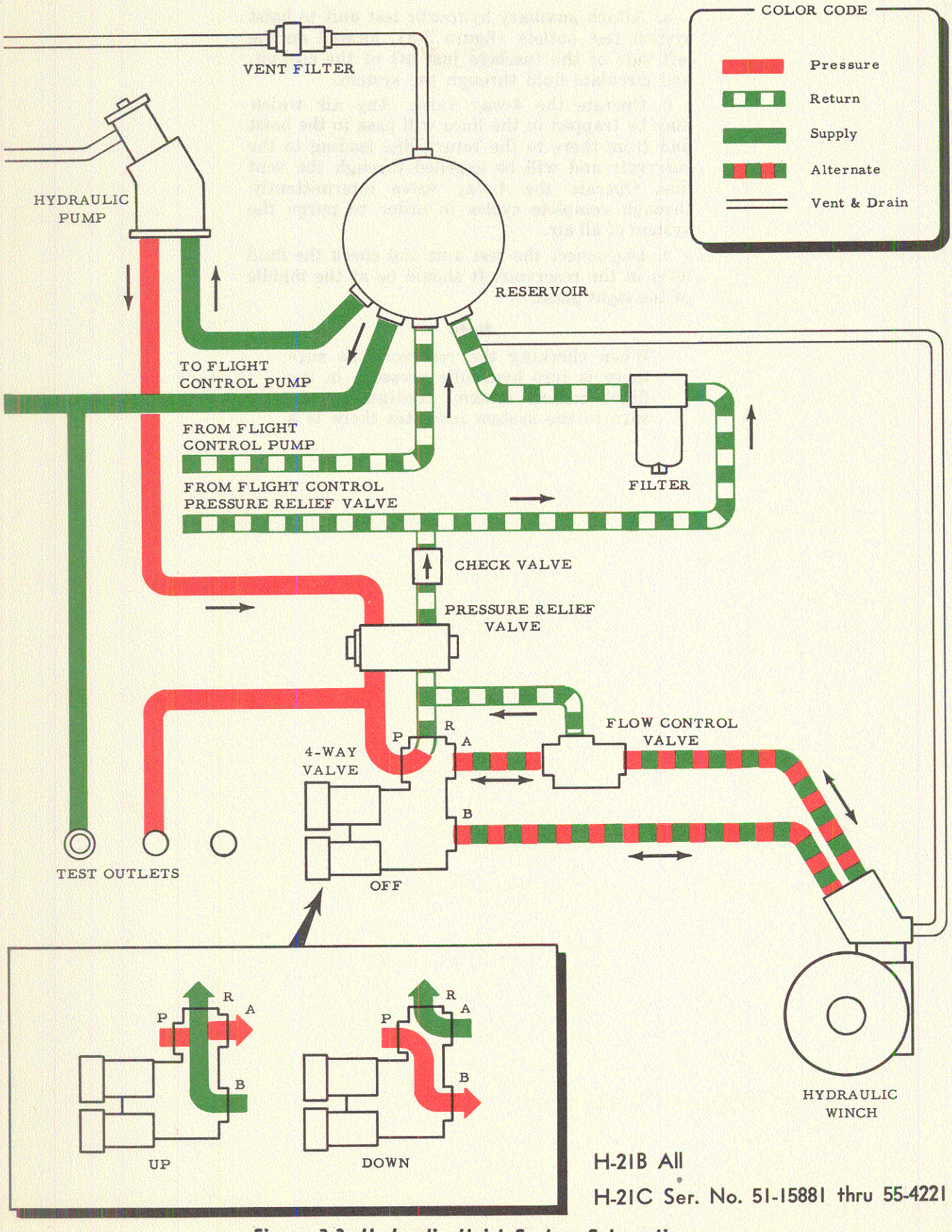

H-21B All

H-21C Ser. No. 51-15881 thru 55-4221

Figure 3-3. Hydraulic Hoist System Schematic

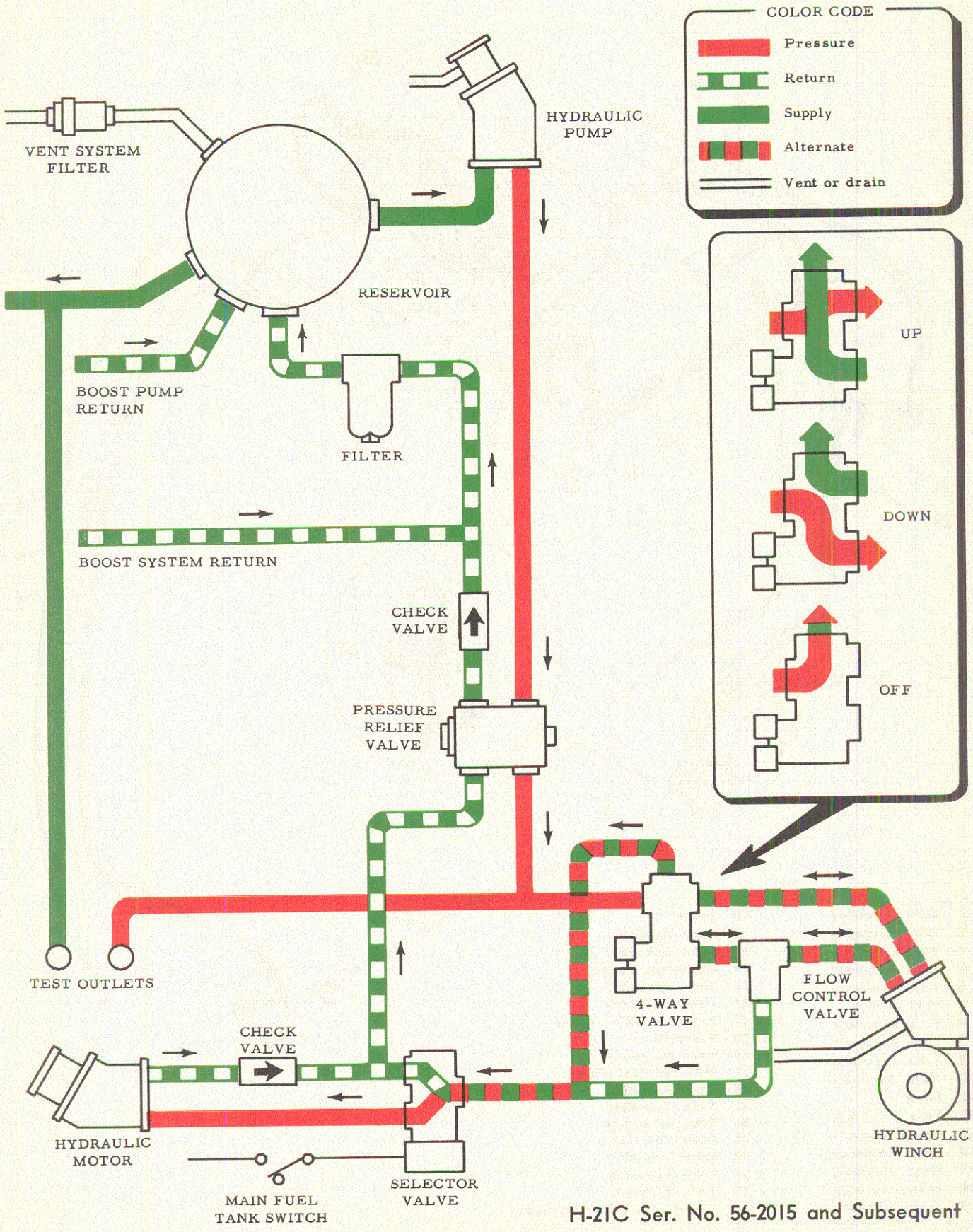

Figure 3-3A. Hydraulic Hoist System Schematic with Fuel Pump

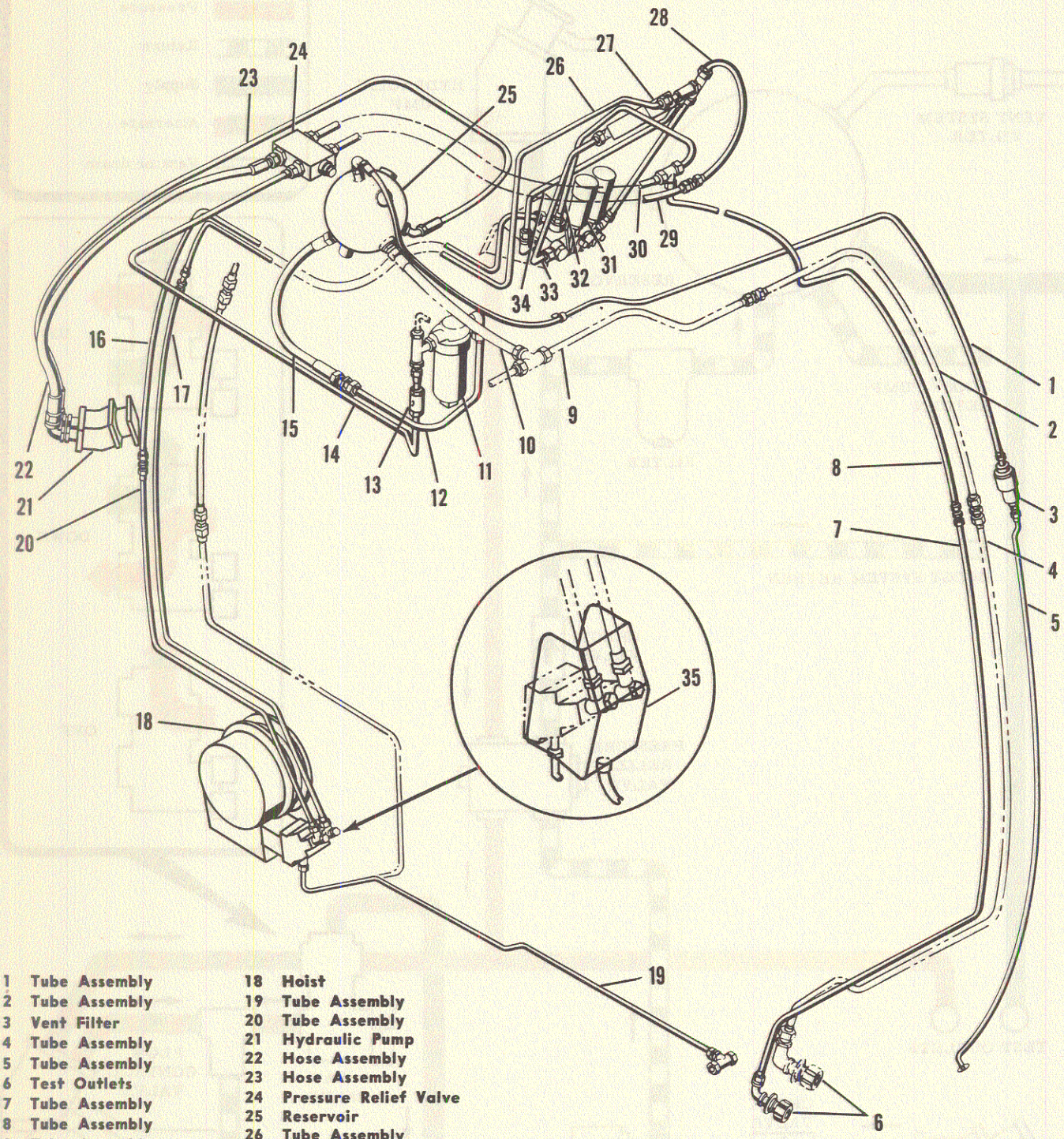

1	Tube Assembly	18	Hoist
2	Tube Assembly	19	Tube Assembly
3	Vent Filter	20	Tube Assembly
4	Tube Assembly	21	Hydraulic Pump
5	Tube Assembly	22	Hose Assembly
6	Test Outlets	23	Hose Assembly
7	Tube Assembly	24	Pressure Relief Valve
8	Tube Assembly	25	Reservoir
9	Tube Assembly	26	Tube Assembly
10	Hose Assembly	27	Flow Control Valve
11	Filter	28	Hose Assembly
12	Tube Assembly	29	Tube Assembly
13	Check Valve	30	Tube Assembly
14	Tube Assembly	31	Four-Way Valve
15	Hose Assembly	32	Tube Assembly
16	Tube Assembly	33	Tube Assembly
17	Tube Assembly	34	Tube Assembly
		35	Guard and Cover Assembly

Figure 3-4. Hydraulic Hoist System

certain amount of fluid in the accumulator which will return to the reservoir and raise its level when the hydraulic pressure is relieved.

d. Check operation of the hoist with a load of 400 pounds. The reel-in speed should be 30–45 feet per minute. The reel-in speed with a 250 pound load should be 60–90 feet per minute.

e. Make certain that the limit switch and the emergency mechanical control of the four-way valve function correctly and that there are no leaks at any of the line connections.

3-10. TROUBLESHOOTING.

Trouble	Cause	Remedy
Excessive chatter when lifting load	Flow control valve malfunctioning	Install new valve. In emergency only, valve can be adjusted temporarily to eliminate chatter
	Partial obstruction in pressure line	Remove obstructions
Reel-in speed too fast or too slow	Flow control valve malfunctioning	Install new valve. In emergency only, valve can be adjusted temporarily to regulate speeds
Lifting operation has an intermittent action	Swinging motion of cable is closing limit switch	Center cable in guide opening and check limit switch ring for correct position
	Electrical switch malfunction	Check circuit continuity
Hydraulic system inoperative when worked either electrically or manually	No fluid in system	Check reservoir
	Pump malfunctioning	Check pump output and install new pump if necessary
	Hydraulic motor malfunctioning	Check operation of winch motor and renew if necessary
	Winch gearing malfunctioning	Check winch operation and renew the unit if necessary
Frayed hoist cable	Cable has jumped off drum or guide pulley	Install new cable end to eliminate frayed section

3-11. RESCUE HOIST FOUR-WAY VALVE AND SWITCHES.

3-12. DESCRIPTION. (See figure 3-5.) The solenoid operated four-way valve (4) is located near the cabin ceiling over the rescue door. This valve provides a means of controlling the direction of rotation of the rescue hoist cable drum. Electrically operated solenoids, controlled by the switch located on the hoist operator's panel (5), position a spool within the valve which controls the hydraulic fluid flow as follows (see figure 3-3).

a. When the system pump is operating but the cable hoist is not turning, the fluid, under pressure, flows into the valve at port (P) and out the return port (R).

b. When the DOWN solenoid is energized, the fluid, under pressure, flows from port (B) to the hoist. Fluid returning from the hoist through the flow control valve, enters the four-way valve at port (A) and is routed to the reservoir through port (R). This flow causes the hoist to reel out the cable.

c. When the UP solenoid is energized, the fluid, under pressure, flows from port (A) to the hoist via the flow control valve. Fluid returning from the hoist is routed to the reservoir through port (R). This flow causes the hoist to reel in the cable. For details on the hoist control switches see Electrical System, Section VII. Should the electrical system fail, the four-way valve can be operated by positioning the spool bellcrank, located on the valve, by hand.

CAUTION

If the four-way valve is operated manually, the UP limit switch on the hoist boom will be inoperative. Be careful not to draw the cable weight into the boom pulley.

3-13. REMOVAL AND INSTALLATION. No special instructions are required to remove the four-way valve. Cap all tubing to prevent entrance of foreign matter into the system.

Note

The four-way valve does not require any adjustments.

3-14. FLOW CONTROL VALVE.

3-15. DESCRIPTION. (See figure 3-4.) The flow control valve (27) is located just above the four-way valve over the rescue door. The valve controls the reel-in speed of the rescue hoist. The unit is installed in the line from port (A) (see figure 3-3) of the four-way valve to the rescue hoist. When the rescue hoist is lifting a heavy load, hydraulic pressure builds up to a point where it "cracks" the spring-loaded flow control valve. This allows some of the hydraulic fluid to bypass the hoist and thereby reduces the reel-in speed. A light load on the rescue hoist cable will not cause a sufficient pressure build-up to "crack" the valve.

Note

The flow control valve acts on the flow to the hoist during reel-in only. When the flow is reversed for reel-out the valve merely acts as a carrier for the fluid as it returns from the hoist.

3-16. REMOVAL AND INSTALLATION. No special instructions are required for removal and installation of the flow control valve. Cap all tubing to prevent entrance of foreign matter into the system.

3-17. FLOW CONTROL VALVE ADJUSTMENT. Malfunctioning of the flow control valve will usually be indicated by chatter in the system

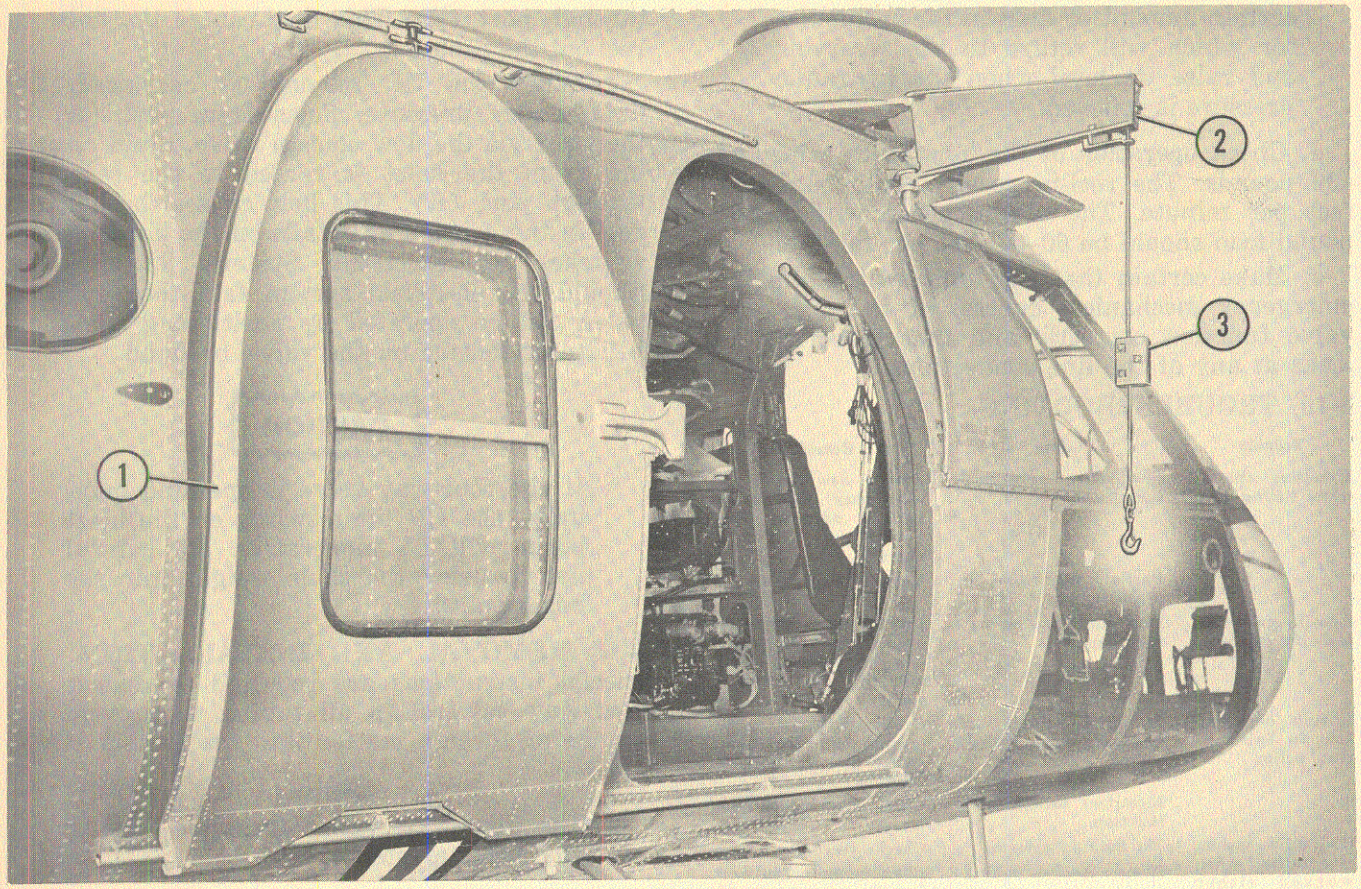

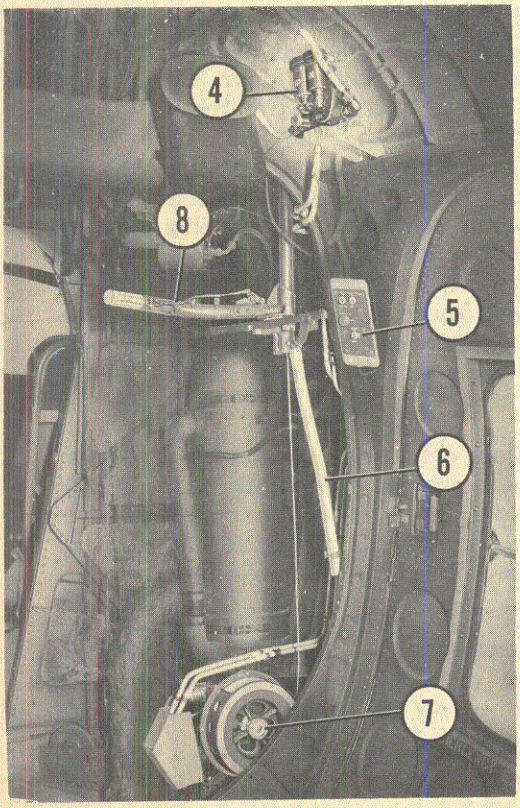

RESCUE HOIST
OPERATOR'S STATION

1 Rescue Door
2 Hoist Boom
3 Cable and Weight Assembly
4 Hoist Four-Way Valve
5 Hoist Operator's Switch Panel
6 Cable Cutter
7 Hydraulic Hoist
8 Hoist Boom Control Arm

Figure 3-5. Rescue Hoist, Operator's Station

when the hoist is lifting a heavy object. This chatter can be eliminated by changing the reel-in speed as follows:

a. Tighten or loosen the socket-head set screw, which is recessed in the side of the valve, until chatter is eliminated. Tightening the screw raises the valve cracking pressure and increases reel-in speed; loosening the screw reduces the valve cracking pressure and decreases reel-in speed.

3-18. HOIST PUMP AND RELIEF VALVE.

3-19. DESCRIPTION. (See figure 3-4.) The hydraulic pump (21), mounted on and driven by the forward transmission, is a constant displacement, constant delivery piston pump which provides a non-pulsating flow of fluid. The pump is not equipped with a relief valve but the system is protected by the relief valve (24) located between the pump and the four-way control valve (31). This relief valve is set to open at 1350 psi and provide full flow at 1500 psi. The valve will reseat when system pressure drops to 1200 psi. A drain line is provided on the pump body to drain the cavity between the mounting pad and the pump body.

3-20. REMOVAL. The hydraulic rescue hoist pump is removed as follows:

a. Disconnect the two hydraulic lines and cap them to prevent entrance of foreign matter into the system.

b. Disconnect the pump seal drain line.

c. Remove the pump.

3-21. INSTALLATION. To install the rescue hoist pump, reverse the removal procedure.

3-22. HOIST.

3-23. DESCRIPTION. (See figure 3-5.) The rescue hoist (7) is located just forward of the rescue door on the right side of the fuselage. The hoist provides a means of raising or lowering equipment or personnel during flight operations. The unit consists of a reversible hydraulic motor which drives a winch through a 40-to-1 worm gear reduction. A reel is attached to the worm gear and 100 feet of 1/8-inch cable is wound on it. After 80 feet of cable have been unwound from the winch, a yellow section of cable, approximately five feet in length becomes visible. This section is followed by a red and white striped section, also five feet in length. This striped section serves as a warning to the hoist operator that the reel is nearly unwound. A ball terminal attached to the cable five feet from the winch end trips the down limit switch, preventing complete unwinding of the cable. The reel will unwind when hydraulic pressure is applied through port A. The reel will rewind the cable when hydraulic pressure is applied at port B. An up limit switch is attached to the hoist boom and will stop fluid flow to the hydraulic hoist motor when the cable weight reaches the boom.

3-24. REMOVAL AND INSTALLATION. No special instructions are required for removal or installation of the hoist or hydraulic motor. Cap all lines to prevent entrance of foreign matter into the system.

Note

The hoist and its hydraulic motor require no adjustments.

3-25. LUBRICATION. For lubrication requirements of the hoist, see Lubrication Chart, Section I.

3-26. CABLE CUTTER.

3-27. DESCRIPTION. (See figure 3-5.) A rescue hoist cable cutter (6) is located just forward of the rescue door on the right side of the fuselage. If the hoist cable is tangled with an object on the ground, the cable may be cut by pulling the cutter arm away from the side of the fuselage. The cutter consists of an arm attached to a small cylinder which rotates in a fitting through which the cable passes. Holes in the fitting and cylinder are aligned for normal operation of the hoist system. If the cutter arm is pulled, the cable will be sheared as the cylinder is rotated in the fitting. A down limit switch is mounted on the cable cutter knife block. This switch prevents the hoist cable from completely unwinding.

Figure 3-6. DELETED

3-28. RESERVOIR AND FILTERS.

3-29. DESCRIPTION. (See figure 3-4.) The reservoir (25) stores a reserve supply of fluid for the hydraulic hoist and flight control systems. A micronic line filter (11) is installed in the return line to the reservoir and a vent system filter is installed in the reservoir vent line. The reservoir is mounted on the upper aft section of the forward transmission. The micronic line filter is located to the left of and slightly below the reservoir. The vent system filter is located on the aft side of the first bulkhead immediately aft of the canted bulkhead and at the left side of the fuselage.

Figure 3-7. DELETED

3-30. REMOVAL AND INSTALLATION. No special instructions are required for the removal or installation of the reservoir and filters. Make sure system pressure is relieved before removing the units. Cap all lines to prevent entrance of foreign matter into the system.

3-31. RESCUE HOIST KIT — H-21B, H-21C. (See figure 3-7A.) A kit consisting of the parts necessary for installation of a rescue hoist is provided with every fourth production helicopter of the H-21B model and every fifth production helicopter of the H-21C model. Installation of the hoist kit is as follows:

a. Mount the upper boom support (13) to the fuselage over the rescue door. Raise the hoist boom (1) into position and insert the upper fitting locking pin.

b. Install the operating handle assembly (5) so that the end of the pivot tube (7) passes through the lower fitting (2) of the hoist boom. Align the hole in the tube with the pilot hole in the boom fitting and drill a 3/8 inch diameter hole through the fitting and tube and insert the locking pin.

Note

With the operating handle installed correctly, the hoist boom will be flush against the fuselage when the handle locking pin is in the extreme left hole.

c. Slide the sector plate (6) and lower bearing support (8) over the lower end of the pivot tube (7) and bolt them to the fuselage mounting bracket.

d. Mount the cable cutter (9) and down limit switch assembly (11) beneath the bearing support.

e. Install the rescue hoist winch and motor (14) on the mounting support and secure it with four bolts.

f. Thread the cable through the up limit switch (3), over the boom pulleys and through the pivot tube (7), cable cutter knife block (10) and down limit switch (11). Clamp the cable to the winch drum. Fasten a ball terminal to the cable approximately five feet from the drum. This terminal should be placed so that it will trip the down limit switch before the cable is completely unwound.

Note

When installing the hoist cable, the colored end must be threaded through the boom first. These colored markings serve as warnings to the hoist operator that cable is nearly unwound.

g. Attach the hook and weight (4) to the cable by removing the cotter pin from the quick disconnect and sliding the two barrel halves from the collar. Place the cable terminals in the depressions in the barrel halves, slide the collar over the halves and insert the cotter pin.

h. Connect the hydraulic lines to the winch, being careful not to allow any dirt or foreign matter to enter the connections. Connect all electrical and hydraulic control connections. Check the operation of the system by connecting a hydraulic pump to the hoist system test outlet and operating the system.

3-32. REMOVAL—H-21B AND H-21C RESCUE HOIST KIT. Removal of the rescue hoist kit is the reverse of the installation procedure.

Note

The hoist winch and hydraulic motor are sealed units and require no adjustments.

3-33. HYDRAULIC TEST OUTLETS.

3-34. DESCRIPTION. (See figure 3-8.) The hydraulic test outlets are located on the lower left side of the fuselage just aft of the cockpit. The center outlet is connected to the reservoir return line. The forward outlet is connected to the pressure line of the hoist system. The aft outlet is attached to the flight control system. The test outlets provide a means of supplying hydraulic pressure to the two systems for ground test purposes when the forward transmission is not operating the hydraulic pumps.

3-35. HYDRAULIC FLIGHT CONTROL SYSTEM.

3-36. DESCRIPTION. (See figure 3-9.) The hydraulic flight control system consists of a pump driven by the forward transmission, a pressure relief valve, a piston type hydraulic accumulator and accumulator air pressure gage, a pressure line filter, a four-way shut-off valve, a system pressure gage, and four hydraulic actuators. The reservoir and associated filters, described under Rescue Hoist System, are also common to the flight control system. The hydraulic flight control system "senses" the movements imparted to the cockpit flight controls by the pilot and supplies the force necessary to move the various flight control assemblies. Should the hydraulic system fail, complete mechanical flight control of the helicopter can be maintained.

3-37. TESTING. The flight control system should be given a functional check and purged of all air whenever a new unit is installed.

Note

Testing at less than the specified limits will result in faulty operation of the system. When using an external hydraulic test unit, the flow requirements of the test unit, shown on the back of

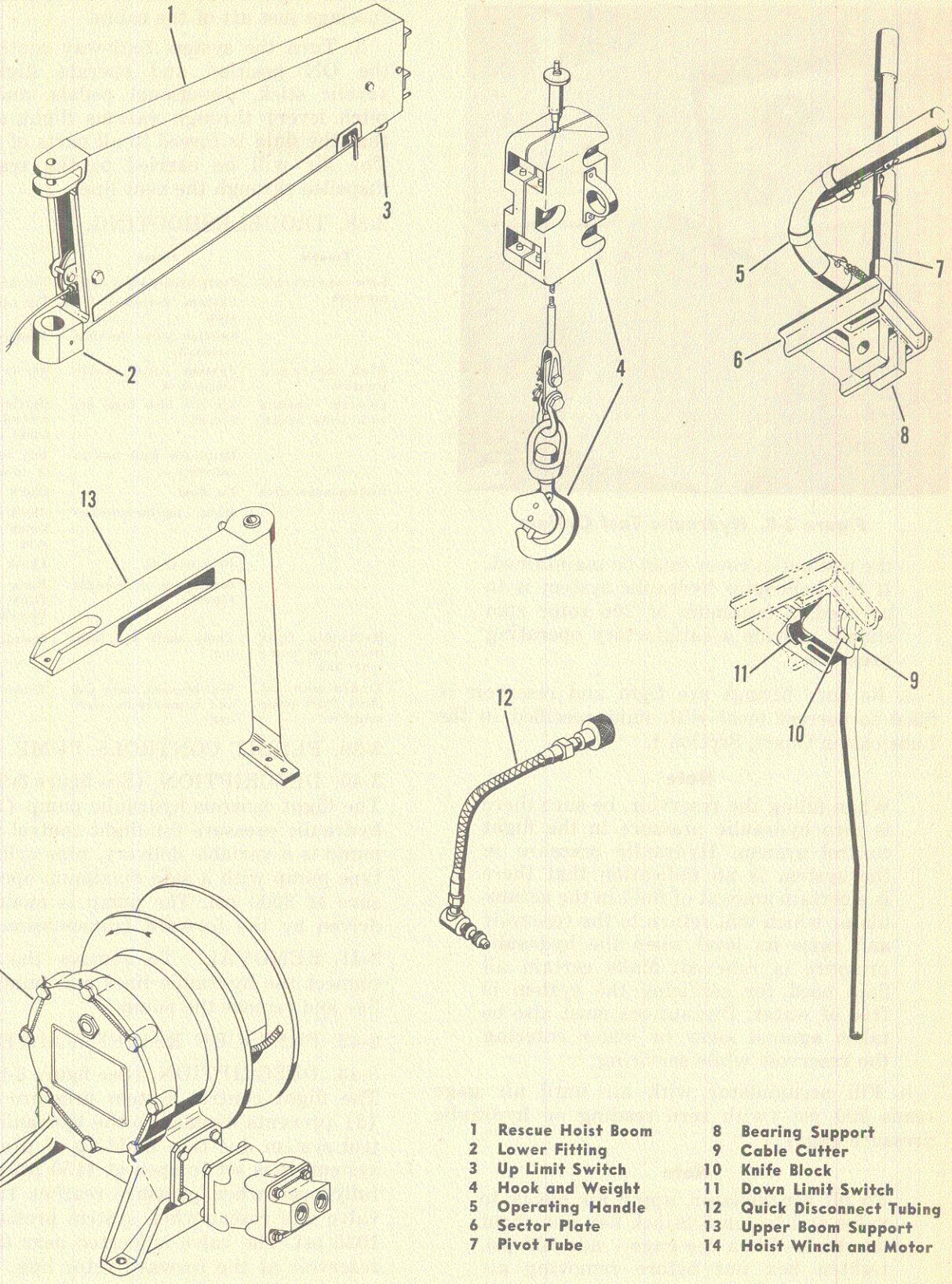

1	Rescue Hoist Boom	8	Bearing Support
2	Lower Fitting	9	Cable Cutter
3	Up Limit Switch	10	Knife Block
4	Hook and Weight	11	Down Limit Switch
5	Operating Handle	12	Quick Disconnect Tubing
6	Sector Plate	13	Upper Boom Support
7	Pivot Tube	14	Hoist Winch and Motor

Figure 3-7A. Rescue Hoist Kit

Figure 3-8. Hydraulic Test Outlets

the test outlet cover must be maintained. If the helicopter hydraulic system is to be used, a minimum of 206 rotor rpm should provide a satisfactory operating pressure.

a. Be sure fittings are tight and reservoir is filled to correct level with fluid specified in the Lubrication Chart, Section I.

Note

When filling the reservoir, be sure there is zero hydraulic pressure in the flight control system. Hydraulic pressure in the system is an indication that there is a certain amount of fluid in the accumulator which will return to the reservoir and raise its level when the hydraulic pressure is relieved. Make certain all fluid used for servicing the system is free of water. Precautions must also be taken against snow or water entering the reservoir while servicing.

b. Fill accumulator with air until air gage reads 300 psi (with zero reading on hydraulic pressure gage).

Note

To fill accumulator, apply air chuck to valve and loosen 5/8-inch hex nut about one turn. When the gage reads 300 psi, tighten hex nut before removing air chuck.

c. Start engine and engage rotors so that hydraulic pump will circulate the fluid through the system or supply pressure through the test outlets (figure 3-8) located on the left side of the fuselage just aft of the cabin.

d. Turn the system four-way control valve to the ON position and operate flight controls (cyclic stick, directional pedals, and collective pitch lever) through various flight attitudes so that the fluid is forced to all parts of the system. The air will be carried to the reservoir and dispelled through the vent line.

3-38. TROUBLESHOOTING.

Trouble	Cause	Remedy
Low operating pressure	Pump bypass valve open	Try new pump
	System relief valve open	Try new valve
	Selector valve leaking internally	Replace selector valve
High operating pressure	System relief valve inoperative	Try new valve
Controls operate with jerky action	Air not bled from actuators	Operate controls with control valve ON to purge system
	Hydraulic fluid low in reservoir	Fill reservoir to proper level
System inoperative	No fluid	Check reservoir
	Pump malfunctioning	Check pump output and renew pump if necessary
	Broken lines	Check and repair
	Actuators incorrectly rigged	Rerig as outlined in Flight Controls Rigging Procedure
Hydraulic fluid pours from pump vent line	Pump shaft seal leaking	Install new pump
Transmission oil pours from pump vent line	Seal between pump pad and transmission leaking	Renew seal

3-39. FLIGHT CONTROLS PUMP.

3-40. DESCRIPTION. (See figure 3-9 and 3-9A.) The flight controls hydraulic pump (15) supplies hydraulic pressure for flight control system. The pump is a variable delivery, nine cylinder, piston type pump with a safe maximum operating pressure of 3000 psi. The pump is mounted on and driven by the forward transmission.

3-41. REMOVAL. To remove the pump, disconnect the hydraulic lines and pump seal drain line and remove the pump.

3-42. PRESSURE RELIEF VALVE.

3-43. DESCRIPTION. (See figure 3-9 and 3-9A.) The flight control system pressure relief valve (3) prevents damage to the hydraulic flight control system due to a build-up of pressure in the system. It is set to open at 1150 psi and becomes fully open when pressure reaches 1265 psi. The valve will reseat when system pressure drops to 1035 psi. The valve is located near the hydraulic reservoir at the forward rotor hub.

3-44. REMOVAL AND INSTALLATION. No special instructions are required for removal or installation of the valve. Cap all lines to prevent entrance of foreign matter into the system.

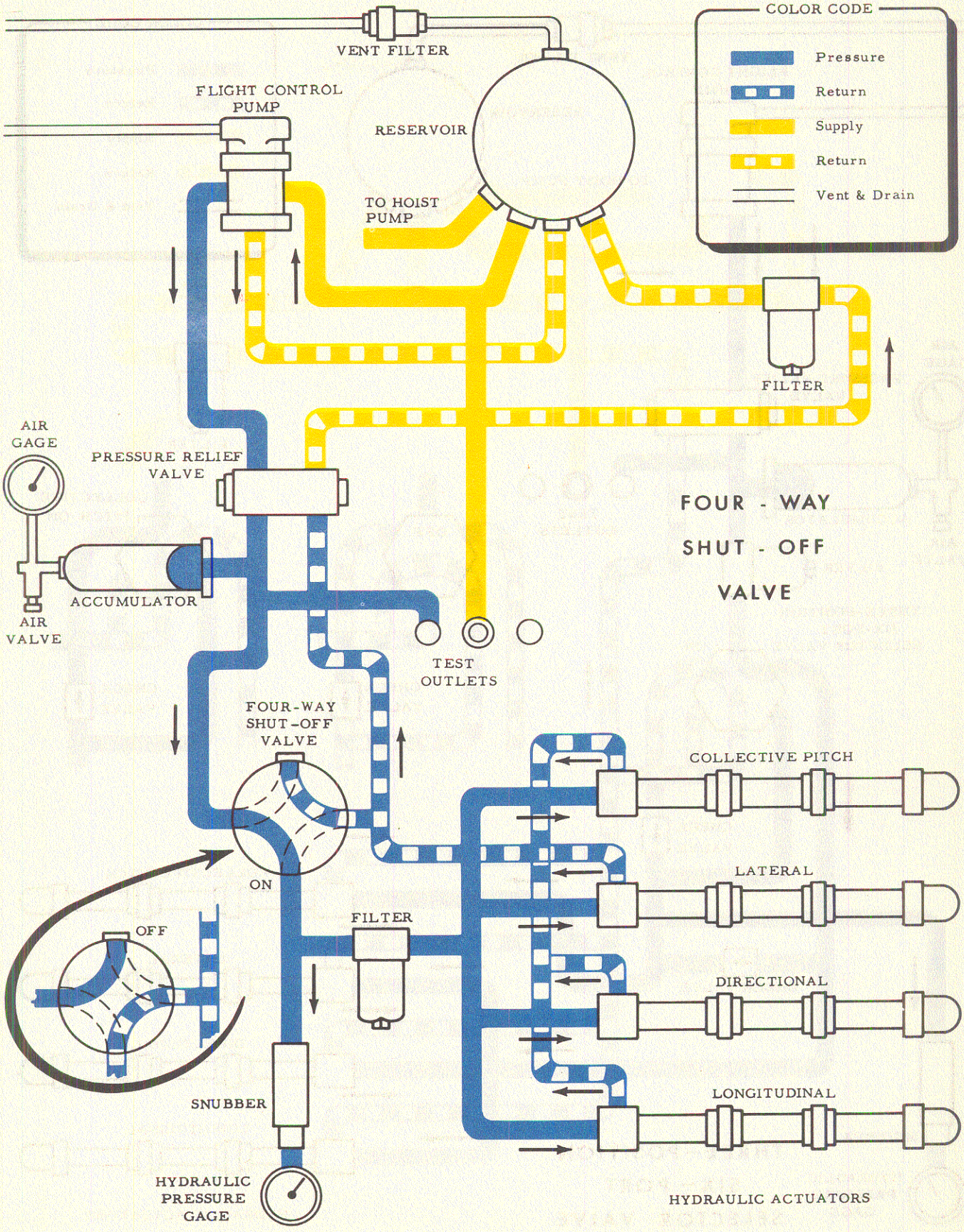

Figure 3-8A. Hydraulic Flight Controls System Schematic—YH-21, H-21A

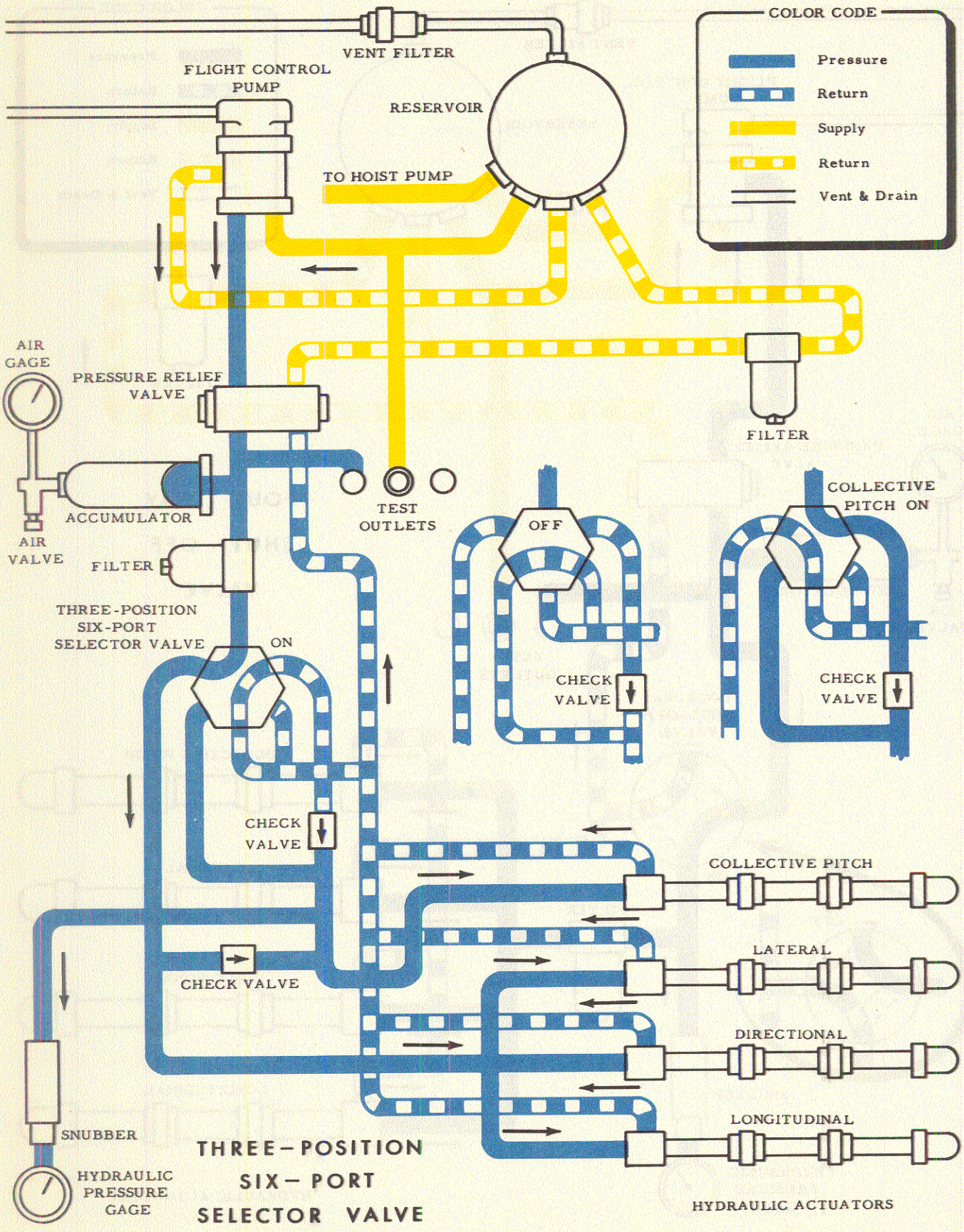

Figure 3-8B. Hydraulic Flight Control System Schematic—H-21B, H-21C

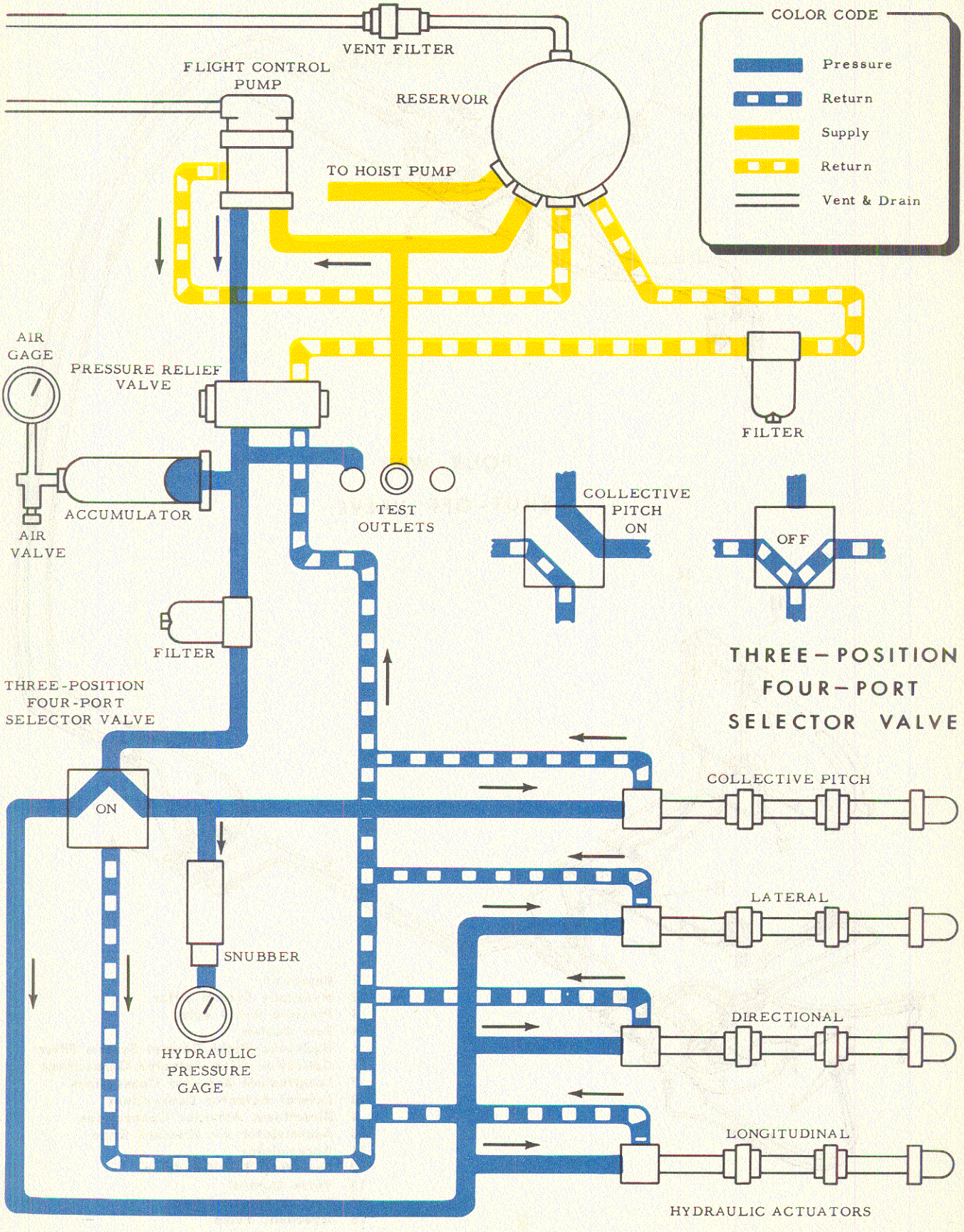

Figure 3-8C. Hydraulic Flight Control System Schematic—H-21B

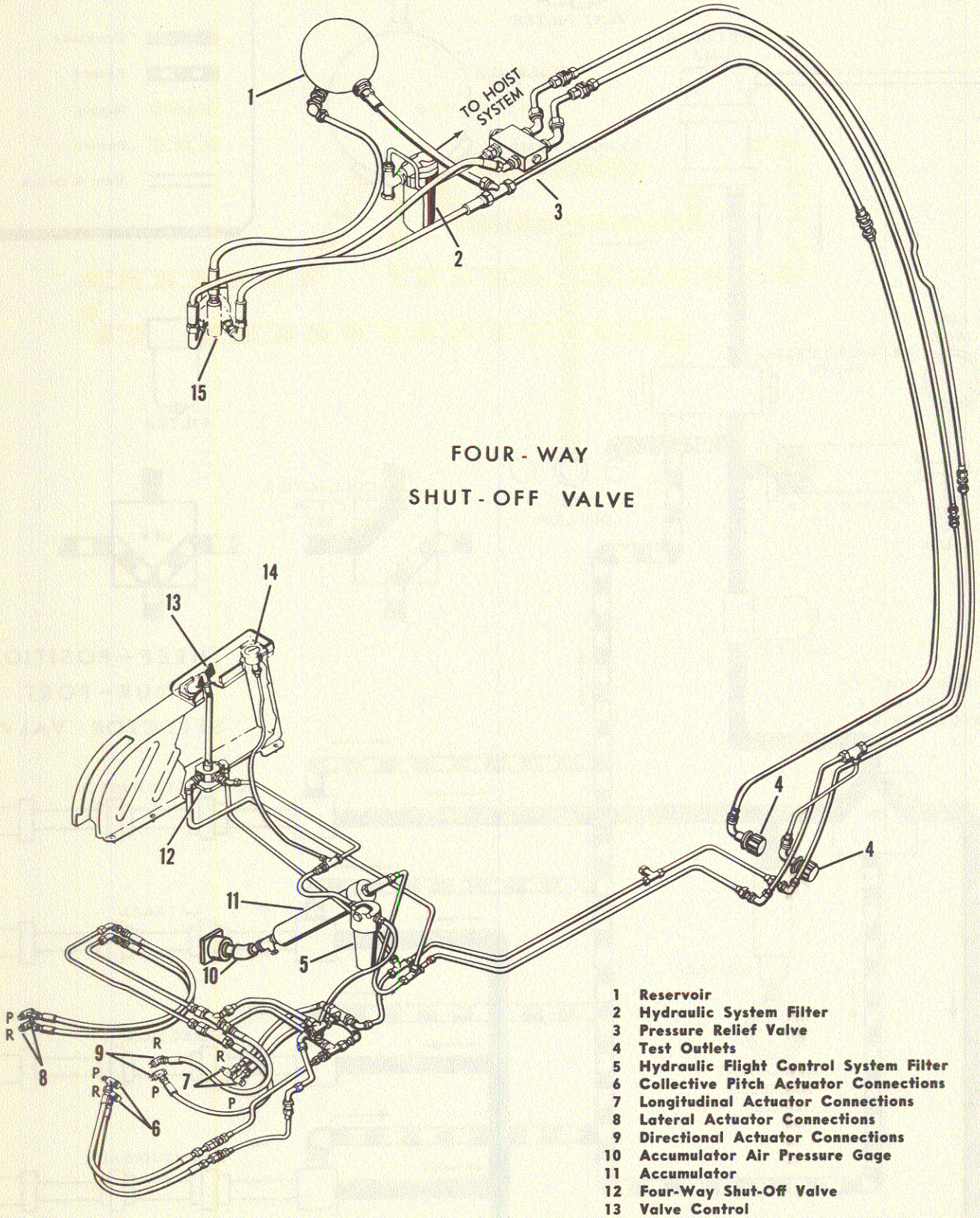

1 Reservoir
2 Hydraulic System Filter
3 Pressure Relief Valve
4 Test Outlets
5 Hydraulic Flight Control System Filter
6 Collective Pitch Actuator Connections
7 Longitudinal Actuator Connections
8 Lateral Actuator Connections
9 Directional Actuator Connections
10 Accumulator Air Pressure Gage
11 Accumulator
12 Four-Way Shut-Off Valve
13 Valve Control
14 System Pressure Gage
15 Hydraulic Pump

Figure 3-9. Hydraulic Flight Control System—YH-21, H-21A

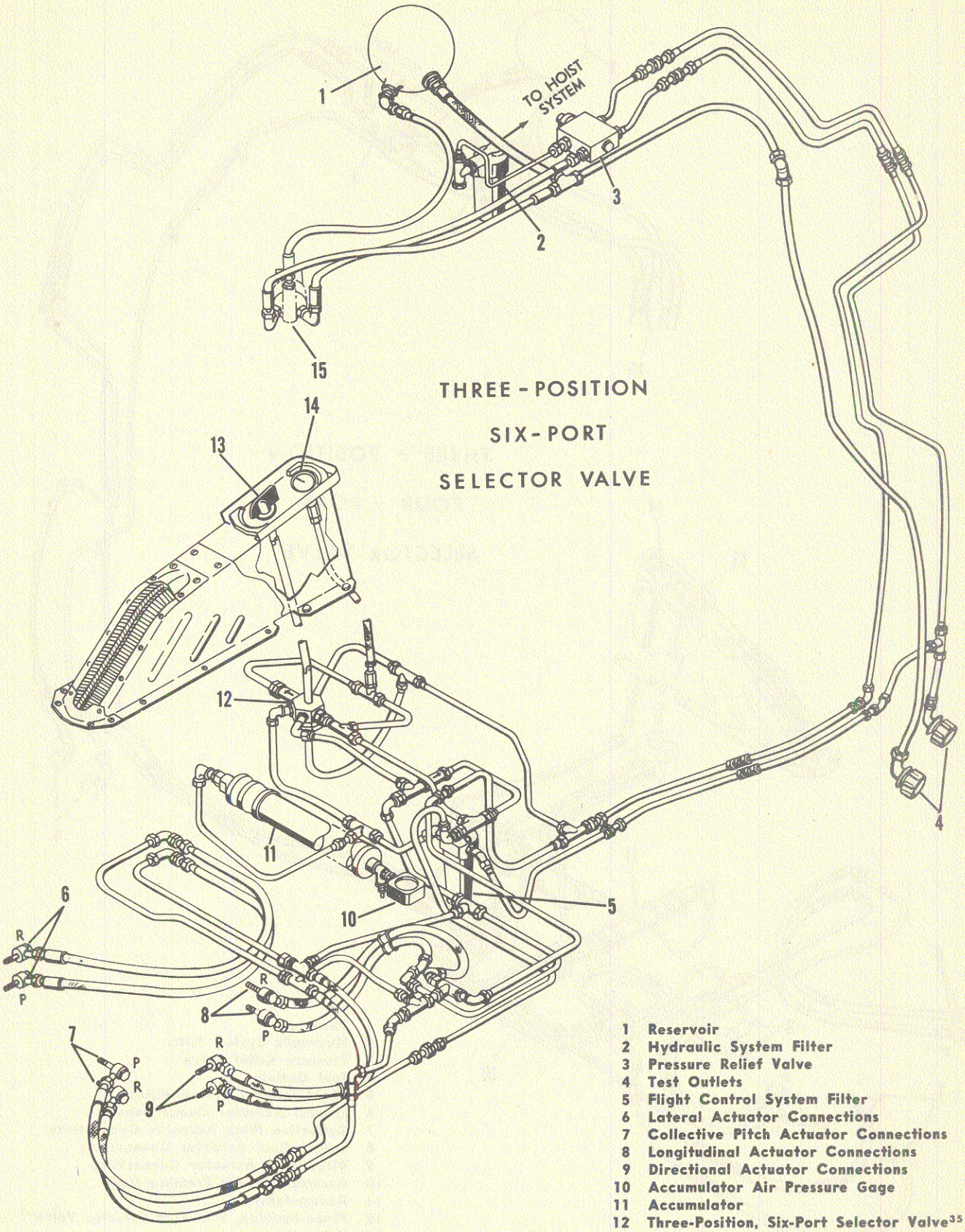

1 Reservoir
2 Hydraulic System Filter
3 Pressure Relief Valve
4 Test Outlets
5 Flight Control System Filter
6 Lateral Actuator Connections
7 Collective Pitch Actuator Connections
8 Longitudinal Actuator Connections
9 Directional Actuator Connections
10 Accumulator Air Pressure Gage
11 Accumulator
12 Three-Position, Six-Port Selector Valve[35]
13 Valve Control
14 System Pressure Gage
15 Hydraulic Pump

[35] H-21B Ser No. 51-15854 thru 52-8679.
H-21C All.

Figure 3-9A. Hydraulic Flight Control System—H-21B, H-21C

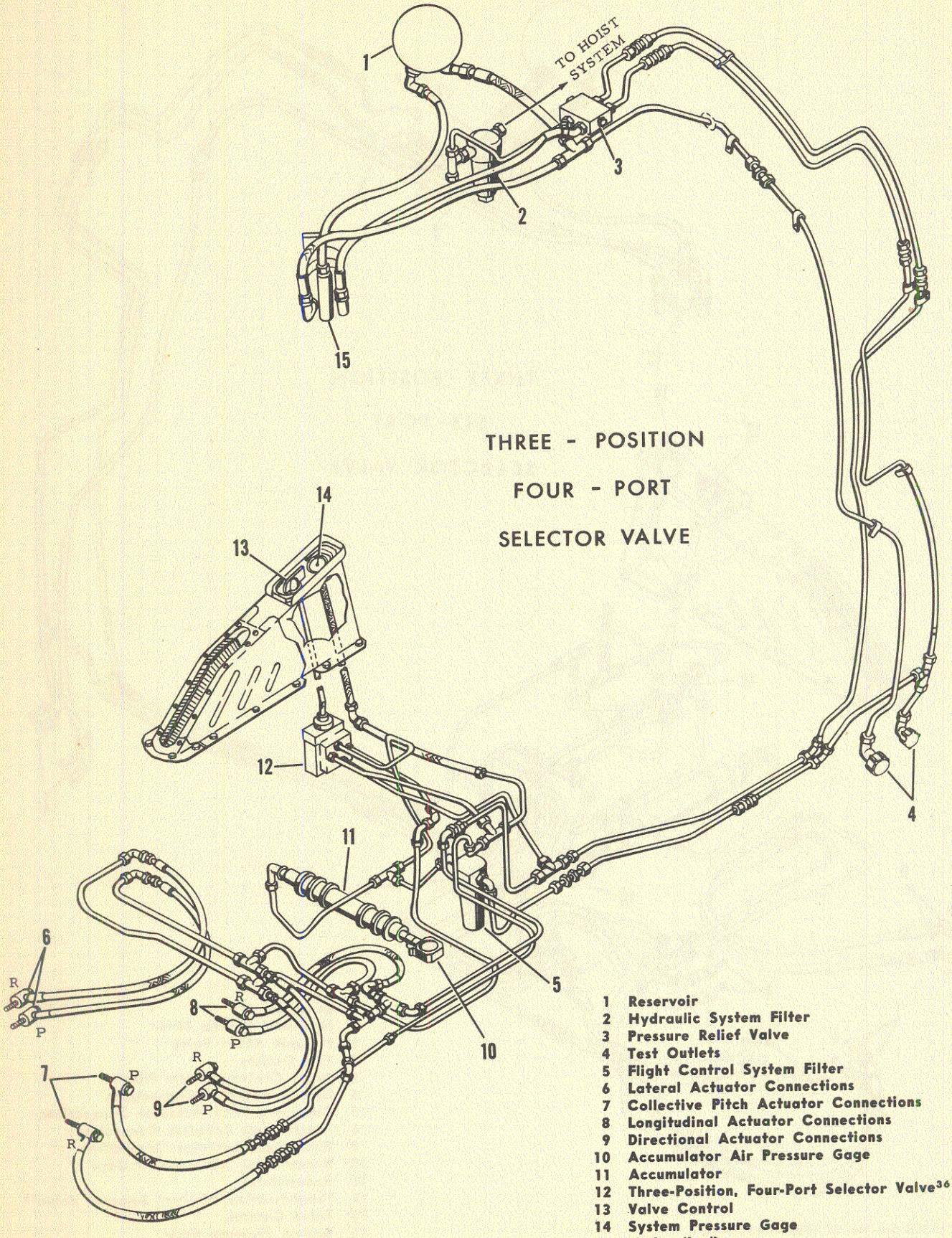

1 Reservoir
2 Hydraulic System Filter
3 Pressure Relief Valve
4 Test Outlets
5 Flight Control System Filter
6 Lateral Actuator Connections
7 Collective Pitch Actuator Connections
8 Longitudinal Actuator Connections
9 Directional Actuator Connections
10 Accumulator Air Pressure Gage
11 Accumulator
12 Three-Position, Four-Port Selector Valve[36]
13 Valve Control
14 System Pressure Gage
15 Hydraulic Pump

[36] H-21B Ser No. 52-8681 and Subsequent.

Figure 3-9B. Hydraulic Flight Control System—H-21B

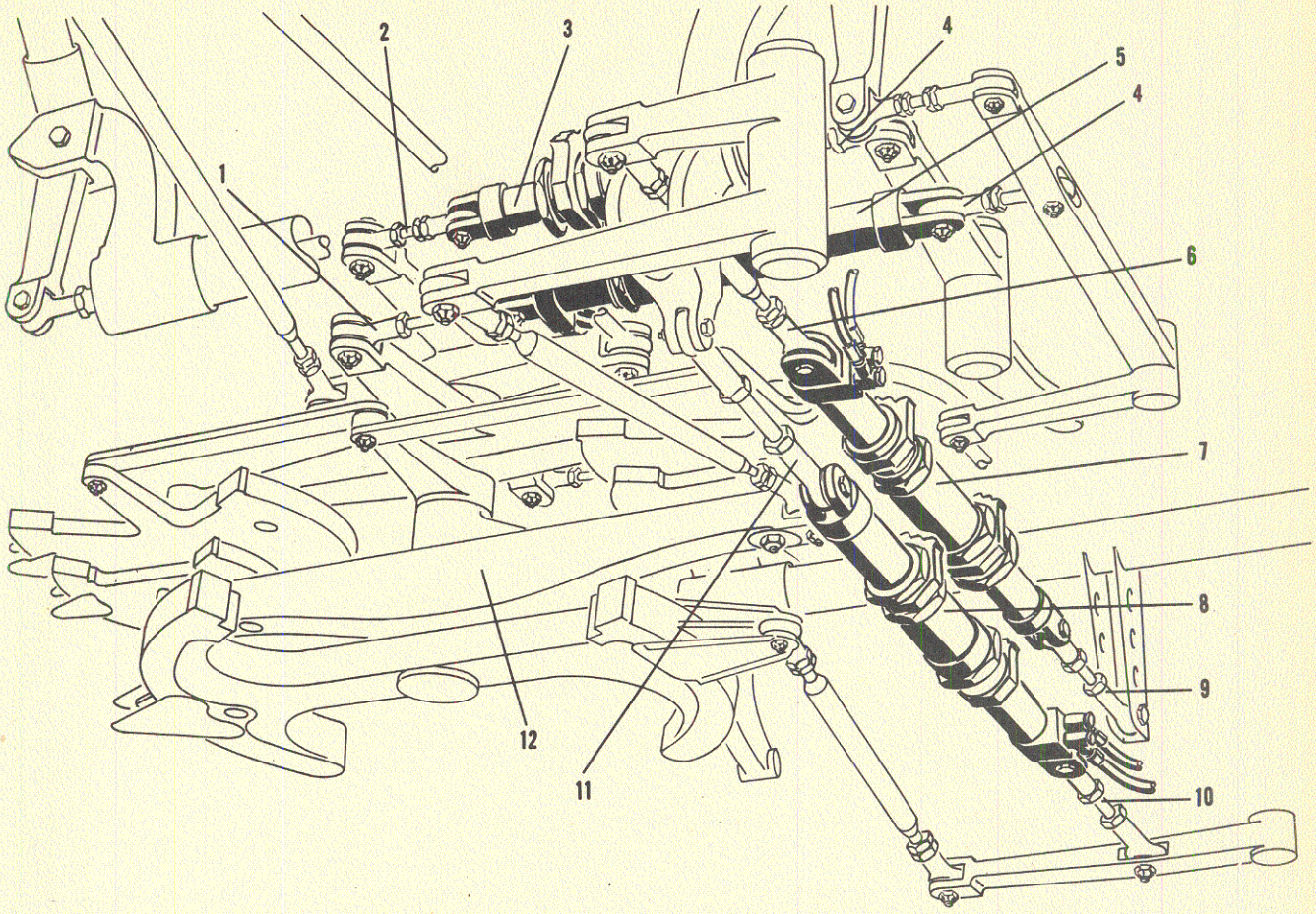

1	Rod Assembly	7	Collective Pitch Actuator
2	Rod Assembly	8	Longitudinal Actuator
3	Directional Actuator	9	Link Assembly
4	Link Assembly	10	Link Assembly
5	Lateral Actuator	11	Link Assembly
6	Rod Assembly	12	Lower Differential Control Assembly

Figure 3-10. Hydraulic Flight Control Actuators

3-45. ADJUSTMENT. The hydraulic flight control pressure relief valve is adjusted to the correct cracking pressure at the factory or during overhaul. If the valve is cracking at an incorrect pressure, replace the unit.

3-46. ACCUMULATOR AND AIR GAGE.

3-47. DESCRIPTION. (See figure 3-9 and 3-9A.) The hydraulic accumulator (11) provides space for storage of hydraulic fluid under pressure. This pressurized storage of fluid maintains system pressure while the pump is stopped or unloaded. It also provides additional pressurized fluid for limited operation of the flight controls in the event of pump failure. The accumulator also serves as a system shock absorber and pulsation damper. A floating piston within the accumulator divides it into two chambers. One chamber is filled with compressed air to a pressure of 300 psi; the other chamber is connected to the fluid pressure line from the pump. When system pressure builds up above 300 psi, the fluid forces the piston toward the air chamber. From this point on, the air and hydraulic pressures will be equal. Accumulator air pressure is indicated on a gage (10) located at the lower end of the accumulator. The accumulator and air pressure gage are located beneath the cabin floor under the co-pilot's seat. Access to the accumulator is through a removable panel beneath the fuselage nose section.

3-48. REMOVAL. Be sure to relieve all accumulator air pressure as directed in paragraph 1-84B and all system fluid pressure before removing the accumulator. Procedure for removal and installation of the accumulator is as follows:

a. Relieve hydraulic system pressure by turning the control valve ON and operate controls until the system pressure gage reads zero.

b. Bleed the air from the accumulator as directed in paragraph 1-84B until the air pressure gage reads zero.

c. Disconnect hydraulic and air line fittings.

d. Remove the accumulator.

3-49. INSTALLATION. To install accumulator, reverse removal procedure and fill with compressed air until gage reads 300 psi with hydraulic pressure at zero.

CAUTION

Do not use thread lubricant on any of the threaded fittings of the accumulator, air gage, and air fill valve.

3-50. FLIGHT CONTROL ACTUATORS.

3-51. DESCRIPTION. (See figure 3-10.) Four flight control actuators are located under the cockpit floor. The uppermost unit is the directional actuator. Directly beneath it is the lateral actuator. Both the lateral and directional actuators are transversely mounted. The collective pitch actuator is longitudinally mounted beneath the lateral actuator. The longitudinal actuator is mounted below the collective pitch actuator. Each of the four actuators have two ports, one marked (P) for pressure and one marked (R) for return. The valves and passages within the actuator are so arranged that movement of the cockpit flight control will direct fluid under pressure to either side of the actuator piston. This piston is linked to the flight controls and positions them to provide the desired flight condition as indicated by the cockpit control movements. Should the hydraulic system fail, complete mechanical control can be maintained.

3-52. REMOVAL AND INSTALLATION. (See figure 3-10.)

CAUTION

Care should be exercised in removing and installing the hydraulic actuators. Excessive movement of the servo-valve plunger will cause damage to the felt wiper in front of the U-cup packings, and particles of felt will find their way under the packing, creating leakage. This leakage will probably be noted only under static conditions, because the packings will inflate when the system is under pressure. Excessive motion of the plunger is prevented, while the actuator is installed, by the bolt attaching the control rod to the clevis end of the actuator. It is therefore recommended that this bolt be reinstalled in the clevis end of the actuators, whenever the control rods are disconnected, to prevent any excessive movement of the servo-plunger during removal or installation of the actuators. When the bolt is installed permanently, it is important that no extra washers be installed which could lead to preloading of the bushings and subsequent binding of the pilot valve. This bolt should turn freely after the nut is torqued.

Since the actuators are arranged one above the other, each actuator must be removed in order to gain access to the one above. When removing any one of the actuators, tag the pressure and return lines to insure correct reassembly. If the link rods connecting the actuators to the various control units are removed without disturbing their length, the controls will not have to be rerigged after the actuators are reinstalled. Relieve all pressure in the hydraulic flight control system before disconnecting any hydraulic lines.

3-53. HYDRAULIC FLIGHT CONTROL SHUT-OFF VALVE.

3-54. DESCRIPTION. (See figure 3-11 and 3-12.) The hydraulic flight control shut-off valve is located on the cockpit floor under the pilot's collective pitch lever shield assembly. A rod assembly connects the valve with the control handle

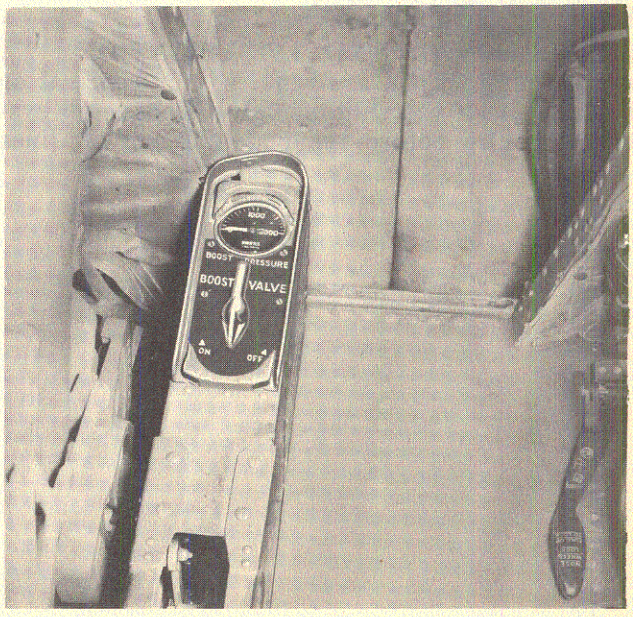

Figure 3-11. Hydraulic Flight Control Shut-off Valve and Pressure Gage—YH-21, H-21A

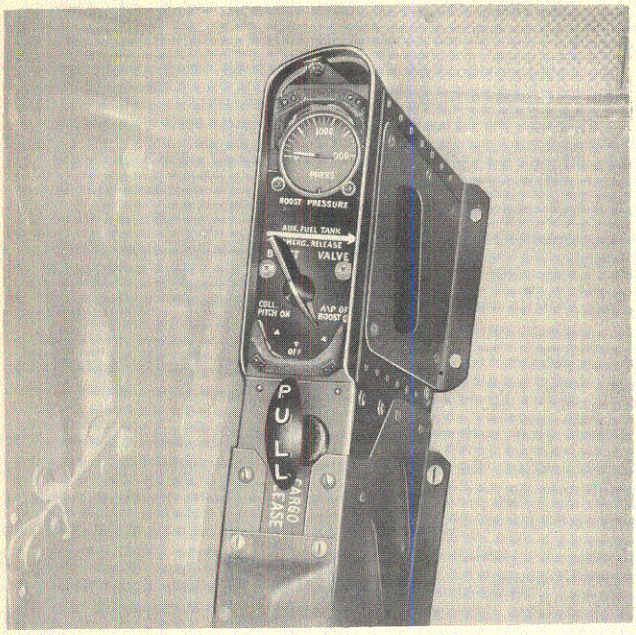

Figure 3-12. Hydraulic Flight Control Shut-off Valve and Pressure Gage—H-21B, H-21C

mounted on top of the shield. The valve is a modified four-way control valve. When the valve is ON, the fluid under pump pressure is directed to the four hydraulic actuators. The actuator return line is diverted to the plugged port. When the valve is OFF, pump pressure is diverted to the plugged port and the return line is connected to the actuator pressure ports. This prevents hydraulic lock and allows direct mechanical actuation of the flight controls.

3-55. REMOVAL AND INSTALLATION. No special instructions are required for removal or installation of the shut-off valve. Relieve all system pressure before removal and cap all lines to prevent entrance of foreign matter into the system.

3-56. SYSTEM PRESSURE GAGE.

3-57. DESCRIPTION. (See figure 3-11 and 3-12.) The hydraulic flight control system pressure gage is located just aft of the shut-off valve on the pilot's collective pitch lever shield. It is calibrated in psi units and is placed in the system between the flight control shut-off valve and the system filter.

3-58. REMOVAL AND INSTALLATION. No special instructions are required for removal or installation of the gage. Relieve all system pressure before removing the gage. No attempt to repair or adjust a defective gage should be made by a person untrained in instrument service.

3-59. FILTER.

3-60. DESCRIPTION. (See figure 3-9 and 3-9A.) An element line type filter (2) is included in the hydraulic flight control system. It is located on the aft side of the first bulkhead forward of the canted bulkhead. Access to the unit is through the removable panel under the fuselage nose section.

3-61. REMOVAL AND INSTALLATION. No special instructions are required to remove the filter. Relieve all hydraulic system pressure and cap all lines to prevent entrance of foreign matter into the system when removing the unit.

3-62. METAL TUBING. If any of the tubing requires replacement, the old tubing, or a piece string routed as the old tubing was routed, can be used as a pilot for the replacement tubing length. Additional length must be allowed before the final cut and flare to allow material for the bends. To bend tubing in the field, fill it with sand or "cerrobend." After the tubing is bent and before final installation, the tubing must be thoroughly cleaned and flushed.

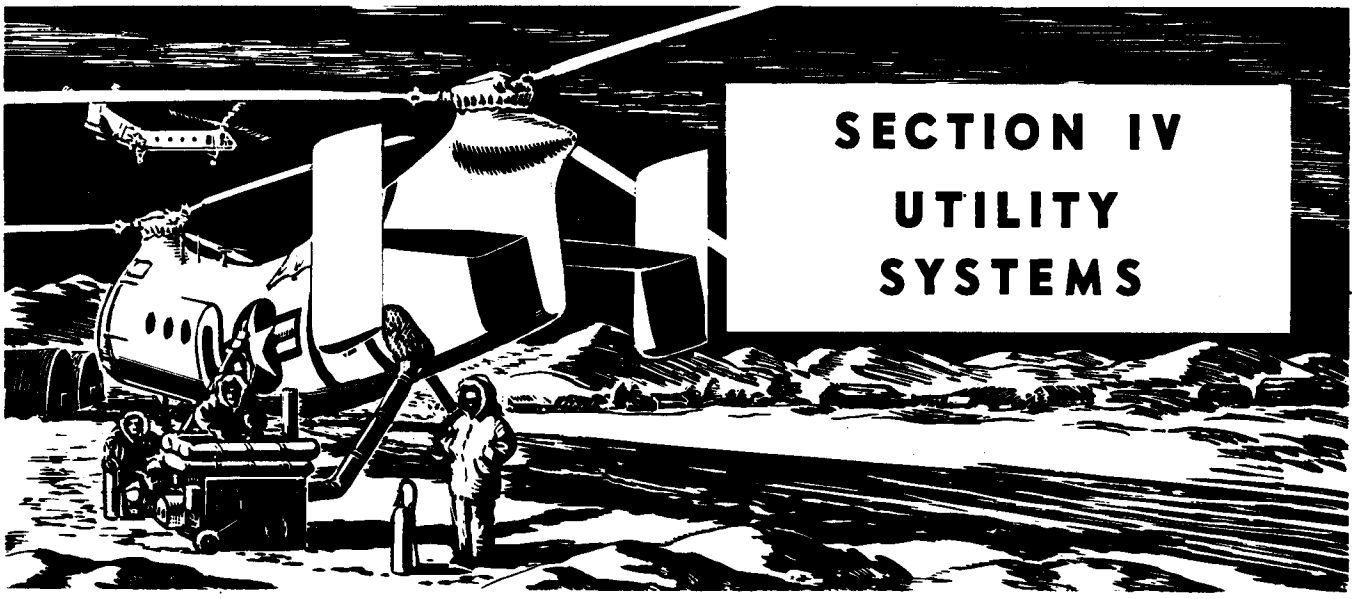

SECTION IV
UTILITY SYSTEMS

CONTENTS

Par.		Page
4-1.	**Heating and Ventilating System**	143
4-5.	Removal—Heater Assembly	145
4-7.	Ground Heating	146A
4-9.	Electrical Heating Receptacles	146A
4-11.	**Fire Detection System**	146A
4-14.	**Windshield Wiper System**	147

4-1. HEATING AND VENTILATING SYSTEM.

4-2. DESCRIPTION. (See figure 4-1.) The recirculating air heating and ventilating system has a gasoline heater with a rated output of 200,000 BTU/hour. The unit is operated electrically and receives its fuel supply from the engine fuel system. Air from the cabin is blown into the heater and is transmitted by ducting to the cockpit foot warmers and windshield defrosters and to the anemostats overhead in the cabin. The system is energized by two switches on the console. The heater assembly is mounted vertically on the aft right side of the bulkhead which separates cockpit and cabin. One heated air duct extends forward under the cockpit floor to the foot warmers located at the pilots' feet and then up to the windshield defrosters. The other heated air duct is mounted overhead along the entire length of the cabin directly below the transmission drive shafting. The heater blower and motor assembly is located above the cabin floor directly beneath the heater. See Section X for the electrical circuit wiring diagram.

4-3. OPERATION. (See figure 4-1.) To operate the heater, turn the heater switch ON. This will automatically start the blower. The blower switch is used to operate the blower during warm weather when it is desired to ventilate the cabin. When the heater switch is turned ON, the following sequence of events occurs in the system.

a. The blower (12) draws air from the cabin and forces it into the heater, creating a positive pressure which causes the air pressure switch (4) to close and energize the fuel solenoid valves in the fuel control assembly (8) and the ignition unit (2).

b. The fuel solenoid valve (30) on the firewall then opens and permits fuel to flow to the fuel control assembly (8).

c. The fuel path in the control assembly is directed through the filter, pressure regulator, and the second fuel solenoid valve and then to the spray nozzle in the heater.

d. The atomized fuel then mixes with the air in the combustion chamber and is ignited by a spark plug which receives its high tension current from the ignition unit.

Note

The ignition unit (2) contains a vibrator and a coil with supplementary units consisting of a radio noise filter, a buffer condenser, a resistor, a tubular copper radio noise shield and a two-position switch. The switch is for changing to the reserve set of vibrator contact points. It must be IN to use the normal contact points and OUT to use the reserve contact points. If it is necessary to use the spare contact points, replace the vibrator at the first opportunity.

e. The blower provides air for both combustion and ventilating. Air for ventilating passes over the heated combustion chamber. The exhaust gases from the combustion chamber are carried

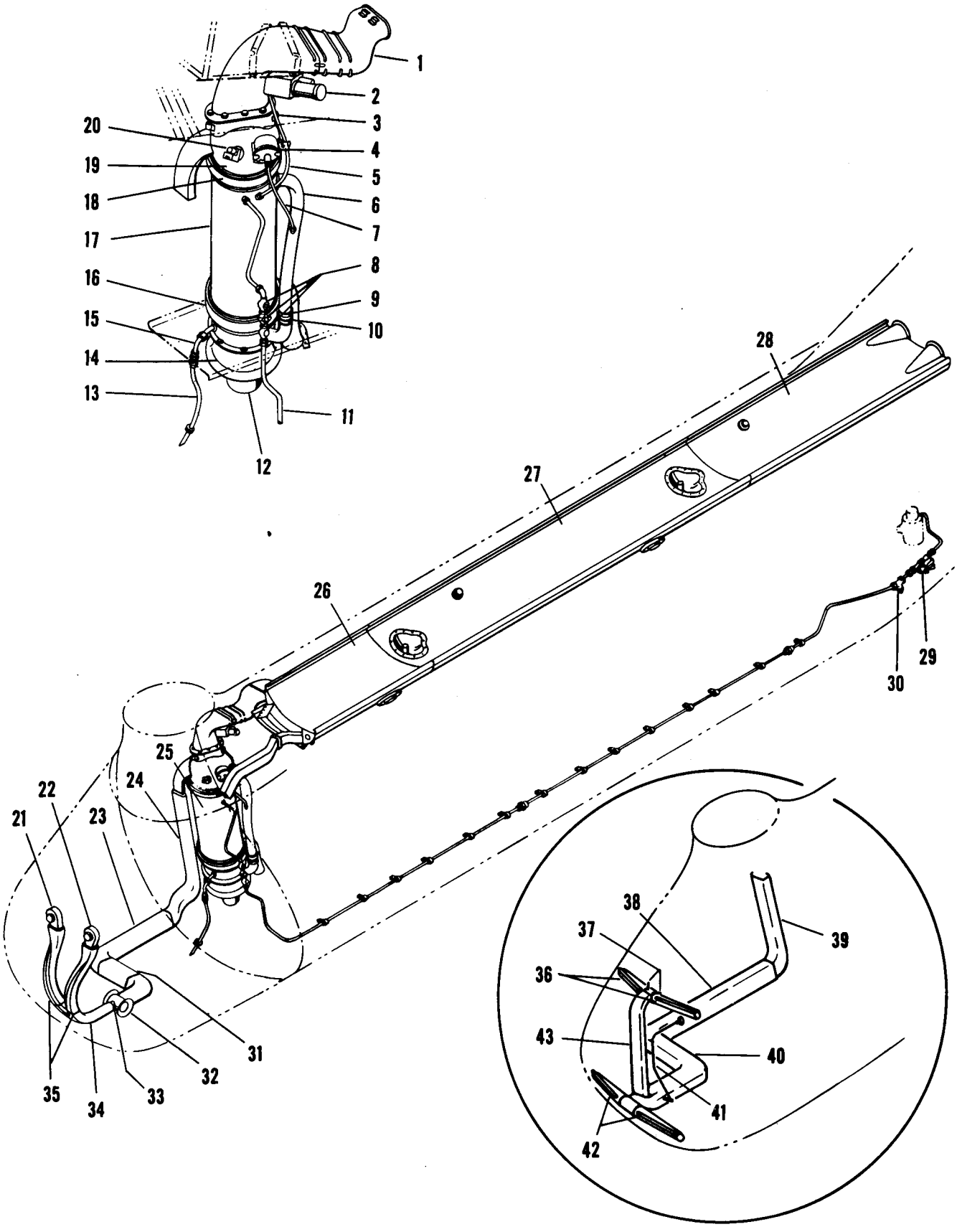

Figure 4-1. Helicopter Heating System

NOMENCLATURE KEY FOR FIGURE 4-1

1 Duct Assembly
2 Ignition Assembly
3 Adapter Valve
4 Air Pressure Valve
5 Ignition Lead
6 Air Inlet Tube
7 Hose Assembly
8 Fuel Control Assembly
9 Exhaust Pipe
10 Clamp
11 Fuel Hose
12 Blower
13 Drain Hose
14 Adapter
15 Tube Assembly
16 Clamp
17 Heater
18 Clamp
19 Adapter
20 Overheat Switch
21 Defroster—YH-21
22 Defroster—YH-21
23 Duct Assembly—YH-21
24 Duct Assembly—YH-21
25 Heater Assembly
26 Forward Duct Assembly
27 Center Duct Assembly
28 Aft Duct Assembly
29 Solenoid Valve
30 T-Fitting
31 Duct Assembly—YH-21
32 Diffuser—YH-21
33 Coupling
34 Duct Assembly—YH-21
35 Duct Assembly—YH-21
36 Upper Defrosters—H-21A, H-21B, H-21C
37 Regulator Valves—H-21A, H-21B, H-21C
38 Duct Assembly—H-21A, H-21B, H-21C
39 Duct Assembly—H-21A, H-21B, H-21C
40 Duct Assembly—H-21A, H-21B, H-21C
41 Defroster Control—H-21A, H-21B, H-21C
42 Lower Defrosters—H-21A, H-21B, H-21C
43 Duct Assembly—H-21A, H-21B, H-21C

outside while the heated air is blown over a series of thermo switches and then through the ducts to the cockpit and cabin.

f. On YH-21 helicopters, a fixed cycling thermal switch closes the fuel solenoid valve when ventilating air temperature reaches approximately 107°C (225°F) and opens the valve at approximately 104°C (220°F). The H-21A, H-21B, and H-21C heaters are equipped with an adjustable cycling switch which permits varying of the temperature range for opening and closing of the fuel solenoid valve and operation of the ignition system. The maximum range for the adjustable thermal switch is 121°C (250°F), and the range can be lowered by means of a numbered, knurled knob. Each number on the knob represents an adjustment in operating temperature of approximately 18°C (32°F).

g. The overheat thermal switch (20) opens the circuit which energizes the fuel solenoid valves and the ignition unit when the heated air temperature reaches approximately 177°C (350°F), thus shutting off the heater operation.

h. A fan overrun thermal switch permits the blower to operate for a few minutes after the heater switch is turned OFF to purge all fuel vapor from the combustion chamber. When the heated air temperature drops to approximately 98°C (120°F), the switch opens and shuts off the blower.

i. The air pressure switch (4) will open the circuit to the solenoid valves and ignition unit if the blower pressure drops below normal due to a clogged duct or defective blower assembly.

j. A balance valve in the heater ducting permits selection of flow. When the valve is in the vertical (open) position, maximum heated air flow is to the cabin. When the valve is in the horizontal (closed) position, maximum flow of heated air is routed to the cockpit. For normal operation, the valve should be placed in the 3/4 vertical (open) position.

CAUTION

The iris valves and anemostats in the cabin ducting must be in the fully open position during and after operating the heating system to preclude the possibility of the ducting ballooning and coming in contact with the rotor drive shafting.

k. The foot warmers and windshield defroster in the cockpit are also adjustable.

l. For ground heating of engine compartment, transmissions and drive shaft bearings, additional valves are provided in the cabin duct, and firewalls. These valves are located and explained in the Ground Heating paragraphs, Section I.

m. For ventilation (without heat) the blower can be energized by the blower switch on the console.

4-4. TROUBLESHOOTING.

Trouble	Cause	Remedy
Heater inoperative	Low blower pressure causing air pressure switch to de-energize system	Check blower and air pressure switch and renew if necessary
	Spray nozzle clogged	Clean nozzle and fuel lines
	Fuel solenoid valves inoperative	Check circuits. Clean or renew valve
	No spark to plug	Check ignition unit circuit. Pull vibrator switch OUT to reserve contact points position. Check for defective spark plug or incorrect spark gap
	No fuel to intake side	Check for ice lock or vapor lock to incoming side
	Exhaust restricted	Remove restriction

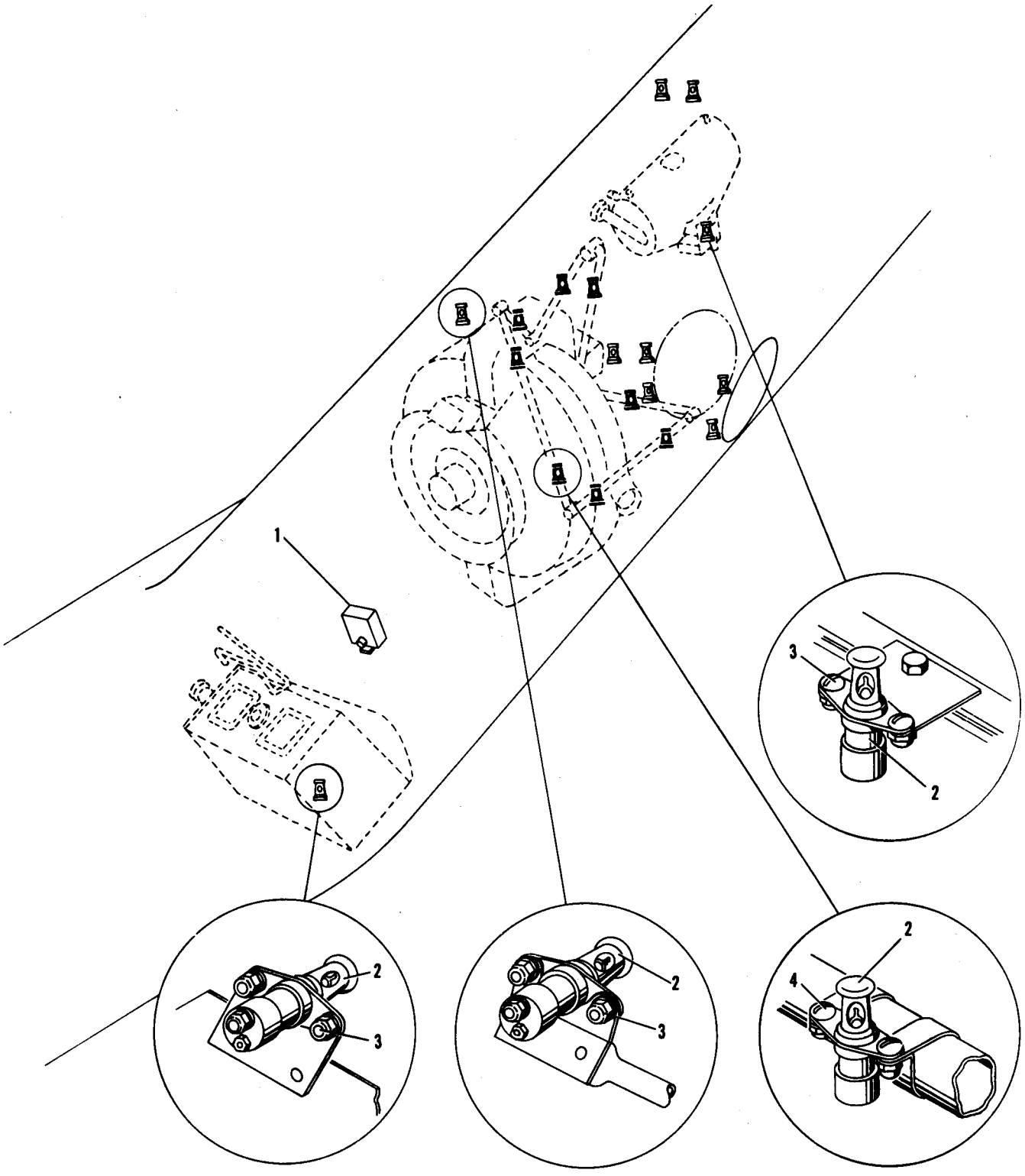

1 Fire Detector Control
2 Fire Detector, 18
3 Mounting Screw
4 Mounting Screw

Figure 4-2. Fire Detection System

Trouble	Cause	Remedy
Insufficient heat	Leaks through heater ducting	Inspect entire duct system and correct any leaks discovered
	Leaks in fuselage structure	Inspect entire cabin and cockpit areas and correct any leaks
	Incorrect fuel pressure	Check pressure regulator
	Overheat switch closes solenoids prematurely	Renew overheat thermal switch

4-5. REMOVAL—HEATER ASSEMBLY. (See figure 4-1.) The heater unit is attached to the two adapters (14 and 19) which are flange-mounted on two support brackets riveted to the structure at the canted bulkhead. The blower (12) is attached to the lower mounting bracket, and a combustion air intake pipe (6) extends from the lower adapter to the top of the heater. The hot air ducting (1) is attached to the upper mounting bracket. Remove the heater assembly as follows:

a. Disconnect the ignition lead.

b. Disconnect the fuel line at the heater.

c. Disconnect the hose assembly (7) from the air pressure switch (4).

d. Remove the combustion air intake pipe (6) by removing the attaching clamps.

e. Disconnect the exhaust pipe (9) by removing the attaching clamp.

f. Disconnect the heater drain line (15) at the lower adapter (14).

g. Remove the clamps (16 and 18) which attach the heater to the adapters.

h. Remove the heater.

Note

When removing the heater, be careful in pulling the drain line through the grommet in the adapter to avoid damaging the line.

4-6. INSTALLATION. Installation is the reverse of the removal procedure. Be sure to push the drain line through the grommet in the adapter when installing the heater.

4-7. GROUND HEATING.

4-8. Ground heating of the helicopter with the helicopter heater and auxiliary units is outlined in Ground Handling, Section I.

4-9. ELECTRICAL HEATING RECEPTACLES.

4-10. For details concerning the provisions for use of electrically heated suits and blankets see Electrical Systems, Section VII.

4-11. FIRE DETECTION SYSTEM.

4-12. DESCRIPTION. (See figure 4-2.) The fire detection system is designed to detect the presence of fire in potential fire zones. Three simple circuits make up the entire system, the detector circuit, the relay panel and the switch panel circuit. The detector circuit is a permanently closed circuit consisting of 18 cage-type thermocouples. They consist, essentially, of two wires of dissimilar metals with their outer ends twisted and welded together. The thermocouple wires are mounted in a heat-resistant insulator and are surrounded by a stainless steel cage. The cage is provided with openings to permit heat to reach the exposed hot junction. The relay panel which is mounted on a bracket secured to the forward side of the firewall consists of a sensitive relay, slave relay, and thermal test unit. The switch panel circuit consists of a test switch and fire warning light. The test switch and the warning light are located in the overhead switch panel. Holding the test switch on furnishes a current which heats the thermocouple element in the thermal test unit. If there is continuity

through all parts of the detector circuit, including the detector thermocouples, the output of the thermal test unit will close the sensitive relay and cause an alarm, thus checking out the operation of the system. Do not hold the test switch on for more than 15 seconds. If a warning has not been indicated in that time, the circuits should be checked for trouble.

4-13. TROUBLESHOOTING.

Trouble	Cause	Remedy
No alarm when test switch is ON	Power supply off	Turn battery switch ON
	Defective detector circuit, grounded wire, or terminal	Insulate grounded conductor
	Loose or broken wire	Tighten or replace wire
	Broken or damaged thermocouple	Replace thermocouple
	Defective warning signal circuit	Check circuit. Replace defective wiring
	Loose or broken wire	Tighten or replace wire
	Defective lamp	Replace lamp
	Defective test switch	Replace switch
	Defective thermal test unit	Replace unit
	Defective sensitive relay	Replace relay
	Defective relay panel	Replace panel

4-14. WINDSHIELD WIPER SYSTEM.

4-15. DESCRIPTION. An electrically operated windshield wiper is provided for keeping the glass panel (2, figure 2-34) clean during inclement weather. A three-position control switch, located in the overhead switch panel controls operation of the wiper. The operating motor (6, figure 4-3) is mounted on the rear of the instrument console. The drive unit (3) and linkage (2) are mounted on the nose panel just below the glass panel.

4-16. REMOVAL. The windshield wiper and motor are removed in the following manner:

a. Disconnect the electrical leads. Disconnect the flexible shaft from the motor and drive unit.

b. Remove the four screws attaching the motor to the console.

c. Remove the pins holding the wiper arms (2) on the drive shafts and remove the wiper arms and blade.

d. Remove the screws which hold the windshield wiper drive unit (3) to the plexiglas panel and remove the unit.

4-17. INSTALLATION. Installation is the reverse of the removal procedure. Adjust the blade so that a maximum sweep of 85 degrees is obtained. Blade sweep adjustment is accomplished in the following manner:

a. Remove the cover of the drive unit (3).

b. If it is necessary to increase blade sweep, loosen the hex nut and turn the cam lobe away from the gear teeth on the cam rider as far as required. To decrease blade sweep, turn the cam lobe in the opposite direction as far as required.

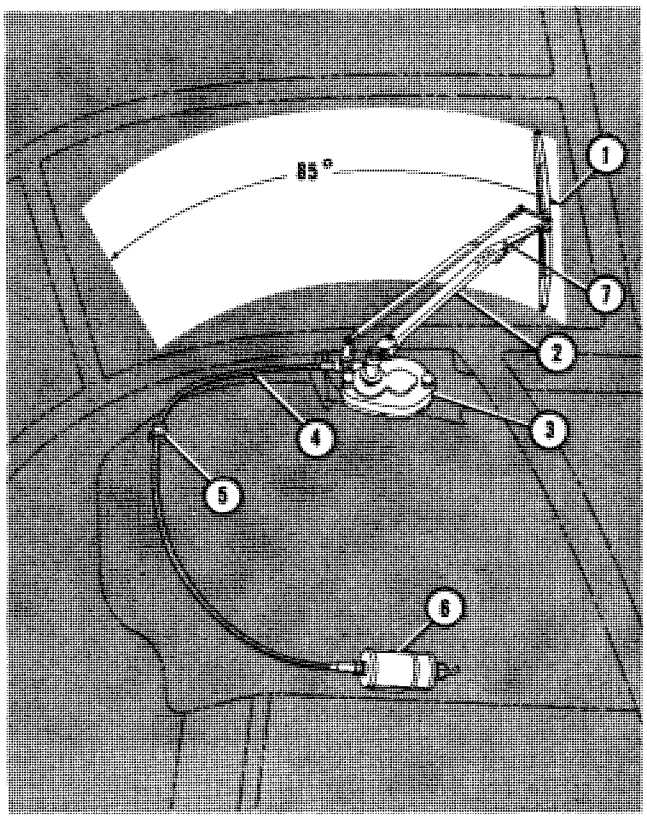

1 Wiper Blade
2 Drive Arm
3 Drive Unit
4 Drive Cable
5 Support Clip
6 Electric Motor
7 Adjusting Screw

Figure 4-3. Windshield Wiper Installation

c. Tighten the hex nut and replace the cover.

d. The cam lobe should be set to give approximately 10 degrees less sweep than maximum. Flexibility and inertia of the sweeping blade permit enough overtravel to compensate for the reduced angular setting.

e. Adjust the pressure of the blade against the glass to measure three pounds minimum to 4-1/2 pounds maximum by turning the slotted screw marked SPRING (7, figure 4-3), located at the upper hinge of the drive arm. Measure the tension with a small fish scale attached to the mid-point of the wiper blade, with the drive arm and blade in a vertical position.

CAUTION

Do not run the windshield wiper on dry glass. This will cause the wiper motor to stall due to friction and cause the resistor in the electrical circuit to fail.

CONTENTS FOR SECTION V

Par.		Page
5-1.	**Power Plant**	149
5-2.	Engine Package	149
5-3C.	Sudden Stoppage or Sudden Reduction in Speed	150
5-5.	Removal—Engine Package	151
5-6.	Engine Package Build-Up	153
5-8.	Exhaust Collector Ring	154A
5-11.	Exhaust Collector Ring Shroud	154A
5-14.	Engine Mount	155
5-16B.	Dynafocal Absorbers	157
5-17.	Starter	158
5-20.	Starter Oil Seal and Coupling	158
5-23.	Generator	158
5-26.	Generator Drive Oil Seal	158A
5-29.	Priming System	158A
5-32.	Fuel Pump	158B
5-34.	Carburetor	158B
5-37.	Supercharger Clutch Control Actuator	158C
5-40.	Tachometer Generator	159
5-43.	Tachometer Drive Shaft Oil Seal	159
5-46.	Spark Plugs	159
5-49.	Vibrator	160
5-52.	**Power Plant Maintenance**	160
5-54.	Lubrication	160A
5-59.	Carburetion	162
5-60.	Manifold Pressure Limiter	162
5-68.	Ignition	166
5-69A.	Ignition Analyzer Provisions	166
5-69C.	Synchronizing Breaker Assembly	166
5-70.	Ignition Cable Assembly	166A
5-73.	Magnetos	166B
5-83.	Magneto Drive Oil Seals	172
5-86.	Induction	172
5-88.	Supercharger Drain Valve	172
5-91.	Rocker Box Covers	173
5-94.	Rocker Arms, Push Rods, Push Rod Housings and Valve Tappets	173
5-97.	Valves	174
5-99.	Intake Pipes	175
5-102.	Cylinders	175
5-104.	Cylinder Air Deflectors	175
5-107.	Cylinders and Pistons	176
5-114.	Minor Repair and Parts Replacement	179
5-118.	**Power Plant Control System**	180A
5-121.	Carburetor Air Heat Control	180B
5-124.	Throttle Control	182
5-127.	Mixture Control	182
5-130.	Supercharger Control	182A
5-137.	Supercharger Clutch Oil Control Valves	182B
5-140.	**Power Plant Controls Rigging Procedure**	182B
5-142.	Adjusting Cockpit Controls—YH-21, H-21A	182B
5-145.	Adjusting Engine Compartment Controls—YH-21, H-21A	182B
5-149.	Rigging Functional Check—YH-21, H-21A	183
5-153.	Clearance Check—YH-21, H-21A	184
5-155.	Adjusting Cockpit Controls—H-21B, H-21C	184
5-158.	Adjusting Engine Compartment Controls—H-21B, H-21C	185
5-158D.	Rigging Functional Check—H-21B, H-21C	186
5-158H.	Clearance Check—H-21B, H-21C	186A
5-158J.	Installing Cables	186A
5-159.	**Power Plant Ignition and Starting System**	186A
5-161.	Starter	186A
5-164.	Magnetos	186A
5-167.	Vibrator and Condenser	186A
5-169A.	Starter Cutout Switch	186B
5-170.	**Power Plant Cooling System**	186B
5-172.	Cowling	186B
5-175A.	Carburetor Air Induction System—H-21C	189
5-176.	Cooling Fan	189
5-183.	Air Exit Doors	194
5-185.	**Power Plant Fuel System**	194
5-188.	Fuel Cell	194
5-195.	Engine Driven Fuel Pump	194B
5-199.	Fuel Pump Drive Shaft Support and Oil Seal	194B
5-202.	Fuel Pressure Transmitter	194B
5-204.	Fuel Booster Pump	194B
5-209.	Fuel Shut-Off Valve	195
5-213.	Fuel Strainer	195
5-217.	Oil Dilution	195
5-219A.	Internal Auxiliary Fuel System	196
5-220.	Auxiliary Fuel System—H-21B, H-21C	198B
5-228B.	External Fuel System	202
5-228D.	External Self Sealing Fuel Tank	202
5-228H.	Selector Valve	202
5-228L.	Hydraulic Motor Driven Fuel Pump	202C
5-229.	**Power Plant Lubrication System**	202C
5-232.	Oil Tank	202D
5-236.	Engine Oil Cooler	202D
5-244.	UAP Diverter-Segregator Valve Assembly	206
5-248.	Oil Shut-Off Valve	207
5-251.	Oil Pumps	207
5-257.	External Oil Supply Tube	209
5-260.	External Oil Scavenge Tube	210
5-263.	Rear Oil Pump Check Valve	210
5-267.	Oil Pressure Relief Valve Replacement and Adjustment	211
5-276.	Pre-Oiling	212B
5-278.	**Transmission System**	212B
5-279A.	Transmissions Interchangeability	213
5-280.	Rotor Transmissions	213
5-281A.	Forward Transmission Hub and Controls Quick Change Assembly	213
5-283.	Aft Transmission Hub and Controls Quick Change Assembly	218C
5-284.	Central Transmission	218E
5-285A.	Central Transmission and Clutch Quick Change Assembly	218H
5-288.	Preflight Run-In	219
5-290.	Clutch Assembly	219
5-292B.	Central Transmission-Clutch Maintenance	221
5-294.	Central Transmission Clutch Actuator	222A
5-298.	Adjustment—Friction Clutch	222A
5-310.	**Transmission Lubrication System**	227
5-314.	Transmission Lubrication Accessories	229
5-315.	Rotor Transmission Oil Pump	229
5-319.	Rotor Transmission Pressure Relief Valves	230
5-322.	Rotor Transmission Pump Screen	230
5-326.	Central Transmission Oil Pump	232
5-330.	Central Transmission Pressure Relief Valves	232
5-332.	Central Transmission Oil Pump Screen	232
5-334.	Temperature Warning Switches	232
5-337.	Oil Temperature Bulbs	232
5-340.	Sump Drain Valves	232
5-343.	Oil Pressure Transmitters	233
5-347.	Oil Pressure Warning Units	233
5-351.	Transmission Oil Cooler	233
5-355.	Transmission Lubrication Jets	233
5-359.	**Drive Shafting**	235
5-362.	Engine Drive Shaft	236A
5-365.	Transmission Drive Shafts	237
5-373.	Adapter Keys	238
5-376.	Rotor Blade Phasing	238A

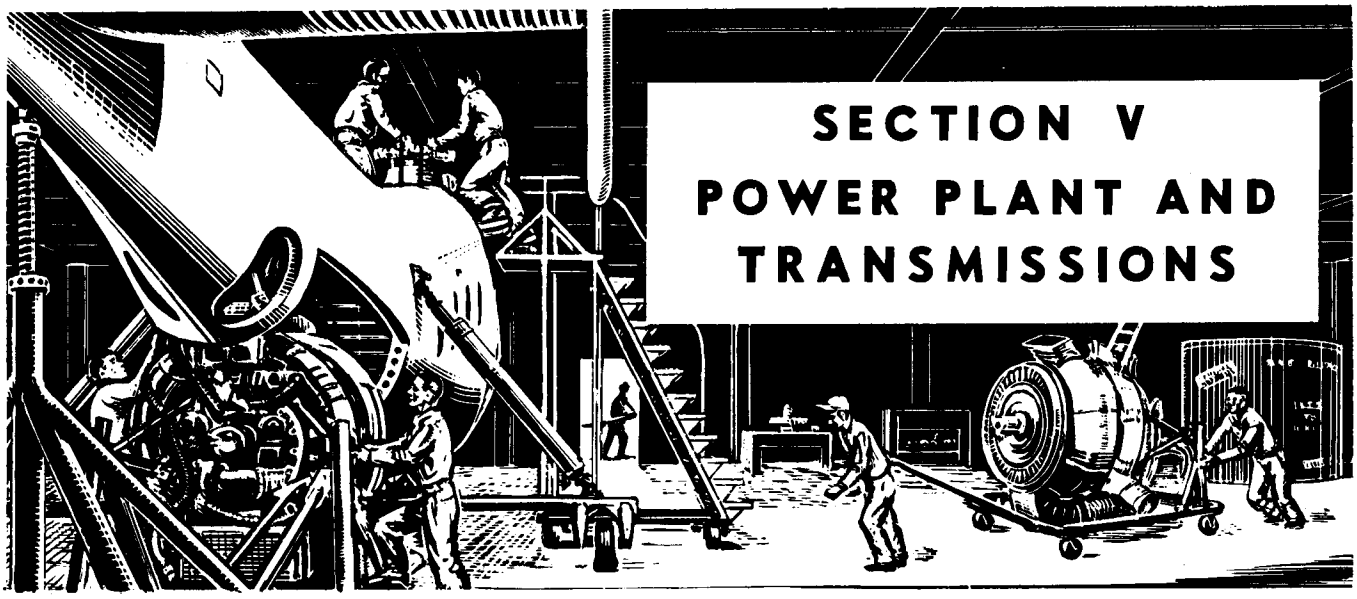

SECTION V
POWER PLANT AND TRANSMISSIONS

NOTE

For Contents of Section V
See Opposite Page

5-1. POWER PLANT.

5-2. ENGINE PACKAGE.

5-3. GENERAL. (See figure 5-1.) The engine is housed in a separate compartment isolated from the rest of the fuselage by flameproof bulkheads. It is installed in the normal operating attitude with the drive end of the crankshaft facing forward. Direction of rotation when viewed from the front is counterclockwise. A flameproof curtain is attached to the stator ring of the engine cowling (figure 5-3). This curtain will confine engine fires to the area aft of the engine. Access to the power plant is gained through two large doors on the underside of the fuselage just aft of the main alighting gear. A removable keel section is provided so that the power plant package may be lowered onto a cradle. Two adjustable air exit doors are located just aft of the engine on the lower side of the fuselage on YH-21 and H-21A helicopters. The engine is a Wright R-1820-103 having nine air-cooled cylinders set radially around the shaft. Power ratings are as follows:

Rated Power (Sea level to 6700 feet)
YH-21, H-21A ... 1150 hp @ 2500 rpm
H-21B, H-21C ... 1275 hp @ 2500 rpm

Take-Off Power
YH-21, H-21A ... 1150 hp @ 2500 rpm
H-21B, H-21C ... 1425 hp @ 2700 rpm

Take-Off Power Loading
YH-21, H-21A ..... 9.39 php
H-21B, H-21C ..... 9.18 php

WARNING

Engines operated over 2800 rpm require inspection per paragraph 5-117A. Engine speeds exceeding 3000 rpm require engine replacement.

5-3A. ENGINE OVERBOOST.

a. When overboost occurs which does not exceed 10 inches Hg above the maximum manifold pressure specified for any power setting for a period not exceeding 15 seconds, the engine will be inspected as follows:

1. Cylinder compression check is required.
2. All spark plugs will be replaced.
3. Inspect all intake pipes, gaskets, and seals for leaks.
4. Engine to be operated and inspected as outlined in paragraph 5-117A.

b. If overboost occurs which exceeds 10 inches Hg, above the maximum manifold pressure specified for each power setting, the engine will be removed. If overboost occurs with manifold pressure not exceeding 10 inches Hg above the maximum specified for more than 15 seconds, the engine will be removed.

5-3B. CONTROL OF ENGINE REMOVAL.

a. The disassembly inspection of engines, coming into overhaul depots after being removed from service, often reveal that a large number

of engines are changed needlessly. Except in cases of obvious failure, such as complete internal failure or when the time between overhauls has been reached, engines will not be removed until a complete investigation has been made.

5-3C. SUDDEN STOPPAGE OR SUDDEN REDUCTION IN SPEED.

5-3D. SUDDEN STOPPAGE OF ENGINE. Sudden stoppage is defined as "a very rapid stoppage of the engine by one or more of the rotor blades hitting an object in such a manner that the engine rpm goes to zero and is not regained."

a. When sudden stoppage occurs, internal damage such as cracked gear teeth, crankshaft misalignment, damaged bearings, etc., may result.

b. Engines reported to have encountered sudden stoppage will be changed.

5-3E. SUDDEN REDUCTION IN SPEEDS. Sudden reduction in speed is defined as "a rapid reduction in engine rpm when one or more of the rotor blades strikes an object and the engine continues to run and recovers its former rpm." When sudden reduction of speed occurs, engines will be inspected as follows:

a. Engine oil strainers and magnetic plugs will be removed and inspected for metal particles. Oil sumps will be drained into a clean container and strained through a clean cloth.

b. The engine will be operated and checked for smoothness of operation. If the engine operates properly during the ground check, it will be shut down. Oil strainers and magnetic plugs will be checked and sumps drained and strained through a cloth. If there is no heavy indication of metal particles in the engine, it will be given a 2-hour flight test. If the engine operates properly during the flight test, it will be checked again for metal in the oil system. If no further indication of metal is found after the flight test, the engine will be continued in service. However, the oil screens and magnetic sump plugs will be rechecked for presence of metal after 10 hours of operation and after 20 hours of operation. If no indication of internal failure is found after 20 hours of operation, the engine will require no further special inspections.

5-4. TROUBLESHOOTING.

Trouble	Cause	Remedy
Hard starting or failure to start	Overpriming	Clear engine and repeat starting procedure using less prime
	Underpriming	Increase priming. Check auxiliary pump operation. Check primer solenoid operation and inspect system for leaks
	Ignition circuit grounded	Make continuity test of entire circuit
	Low cranking speed	If power source is OK, clean starter brushes and commutator
	Defective starter	Replace starter
	Defective induction vibrator	Replace vibrator
	Obstructed priming orifice	Remove orifice and clean
	Obstructed induction system	Remove obstruction
	Liquid lock in cylinders	Drain lower cylinders
	Defective magneto in booster circuit	Replace magneto
	Defective priming valve	Replace carburetor
Engine runs rough or will not continue to run	Fan hub nut loose	Tighten to proper torque
	Insufficient or fluctuating fuel pressure	Set engine pump to 20 psi with auxiliary pump OFF
	Incorrect idle rpm and mixture adjustments	Adjust idle rpm and mixture as outlined in Power Plant Maintenance
	Defective spark plugs	Replace defective plugs
	Incorrect ignition timing	Retime magnetos
	Leak in induction system	Repair
Engine running rough	Sheared cylinder studs	Replace engine
No oil pressure	Air lock in pump	Evacuate air
	Sheared oil pump drive	Replace pump
	Defective pressure relief valve	Repair or replace defective valve
Low oil pressure	Incorrect relief valve adjustment	Adjust relief valve as outlined under Power Plant Lubrication System
	Leaking oil dilution valve	Repair or replace defective valve
	Air in lubrication system	Drain lubrication system, check for air leaks, repair
	Highly viscous oil	Use correct grade oil, preheat oil if necessary
	Defective relief valve	Repair or replace defective valve
	Defective check valve	Repair or replace defective valve
	Clogged pressure oil strainer	Remove and clean strainer
	Inadequate oil supply	Add oil to tank
High oil pressure	Incorrect relief valve adjustment	Readjust relief valve
	Defective relief valve	Repair or replace defective valve
High oil temperature	Defective oil cooler	Replace oil cooler
Oil loss through breather	Combustion pressure in crankcase	Replace defective piston
	Clogged scavenge screens	Remove and clean screens
	Defective scavenge pump	Replace pump
	Restriction in vent to tank	Remove restriction
	Leaking oil dilution valve	Repair or replace defective valve
High oil consumption	Oil loss through breather or exhaust system	Check for probable cause and correct
	External oil leakage	Replace defective oil seals
Afterburning in engine exhaust	Excessively rich mixture	Correct the mixture; check for fuel leakage into induction system and eliminate leaks

Trouble	Cause	Remedy
Afterburning in engine exhaust (cont)	Late magneto timing	Time magnetos
	Incorrect valve clearance	Reset valves
	No ignition in a cylinder	Remove spark plugs, test and install new plugs if necessary
	Defective exhaust valve	Install new valve
	Clogged or dirty carburetor air filter	Clean or replace
Backfiring into engine induction system	Excessively lean mixture	Correct the mixture; eliminate vapor from fuel system, eliminate air leakage into induction system
	Early magneto timing	Time magnetos
	Incorrect valve clearance	Reset valves
	Defective intake or exhaust valve	Install new valve
	Oil in induction system	Eliminate external causes; examine interior of No. 3 intake pipe for oil. If oil is present, replace engine
Detonation and pre-ignition	Incorrect fuel	Use correct grade of fuel
	Excessive manifold pressure	Operate engine within prescribed range
	High cylinder temperature	Enrich fuel mixtures
	Incorrect magneto timing	Time magnetos
Engine overheating	Lean mixture	Correct the mixture
	Improper oil cooling	Repair or replace cooler
	Improper cylinder air cooling	Repair or replace deflectors and cowling
Cylinder overheating	Improper cylinder air cooling	Repair or replace deflectors
	Loose spark plugs	Tighten spark plugs
	Loose intake pipe with consequent lean mixture	Tighten or replace pipe and seals
High fuel consumption	Defective carburetor	Replace carburetor
	Defective priming valve	Replace carburetor
	Defective fuel pump	Replace fuel pump
	Poor compression	Repair defective cylinder
Oil smoke in engine exhaust	Leakage past pistons or valves	Replace defective pistons or cylinders
	Leakage past impeller oil seals	Clean impeller oil seal breather holes (under side of plug in front of carburetor); examine interior of No. 3 intake pipe. Replace engine if oil is present
Low manifold pressure, poor performance	Defective impeller clutch control	Check clutch control actuator operation
	Damaged impeller	Remove carburetor and examine impeller. Replace engine if impeller is damaged
Low manifold pressure, poor performance	Carburetor ice	Pre-heat air or de-ice depending on climatic conditions
	Defective carburetor throttle control	Replace carburetor
Uneven operation	Any of the previously mentioned items	Remedy as instructed
	Internal parts failure	Replace engine
	Improper engine shaft loading	Inspect installation
Valve tap	Malformed tappet roller	Replace roller
Metal or foreign material in oil	Contaminated oil	Drain and clean engine and oil system. Flush back into engine, oil tank and cooler
	Internal parts failure	Analyze particles; replace engine if necessary
Bent push rods	Excessive pressure in cylinders	Remove cylinder, examine both valve mechanisms and articulated rods
Bent engine shaft	Sudden engine stoppage	Replace engine
Manifold pressure too high at full throttle	(1) Ruptured manifold pressure bellows, or (2) servo piston or linkage stuck	Replace limiter in (1); in (2) check supply of engine oil to limiter, check proper gasket installation, hand check linkage and piston
Limiter does not limit manifold pressure at sea level (manifold pressure too high at wide open throttle)	Ruptured bellows	Replace regulator
	Servo piston or linkage stuck	Check supply of engine oil to regulator; check proper gasket installation; hand check linkage and piston
Limiter "hunts" when limiting	Oil in manifold pressure passages	Open passage and blow out with a maximum of 40 psi air pressure
Inability to achieve better than half-throttle manifold pressure	Servo valve stuck causing servo piston to assume full limiting position	Check engine lubrication system for presence of chips. Replace regulator
Limiter too sensitive	Improper rigging	Rerig actuator and linkage
Throttle setting too near closed for satisfactory disengaged start	(1) Safe-start throttle setting cam in limiter improperly adjusted; or (2) starting cam in limiter unable to reset prior to engine start	(1) Adjust safe disengaged start cam; (2) open, then close throttle prior to engine start if engine was shut down with throttle fully closed

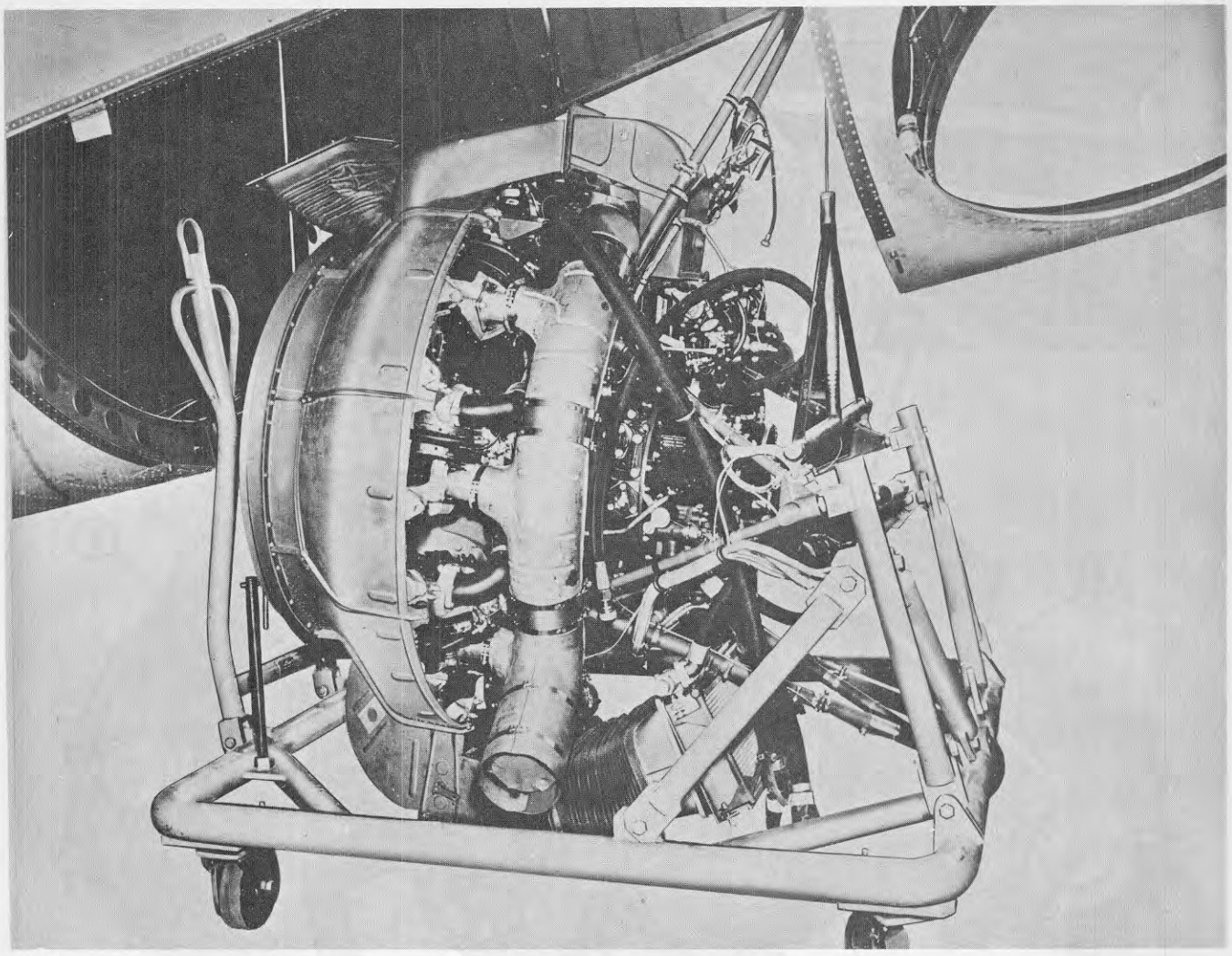

Figure 5-1. Engine Package

Trouble	Cause	Remedy
Throttle setting too great for satisfactory disengaged start	Safe-start throttle setting cam in limiter improperly adjusted or throttle not fully closed against cam prior to starting	Adjust cam

5-5. REMOVAL—ENGINE PACKAGE. (See figure 5-2.) Remove engine package as follows:

CAUTION

Ground the helicopter against static electricity before removing the engine package.

a. Turn the fuel shut-off valve control switch OFF.

b. Turn the oil shut-off valve control switch OFF.

c. Turn the battery switch OFF.

d. Disconnect battery leads.

e. Remove engine hatch doors.

f. Remove the engine fire curtain (figure 5-3).

g. Remove drive shaft assembly between the engine and clutch. (See Drive Shafting, in this section.)

h. Remove keel assembly. (See Fuselage, Section II.)

CAUTION

Before removing the keel, support the aft end of the helicopter with a tail jack in order to relieve imposed loads on the fuselage structure which will develop when the keel is removed.

i. Remove engine oil cooler air intake duct to prevent crushing it when lowering engine to the cradle.

j. Detach the transmission oil cooler air duct at transmission oil cooler.

k. Break the following oil system connections:

1. Oil return line at engine mount bulkhead.

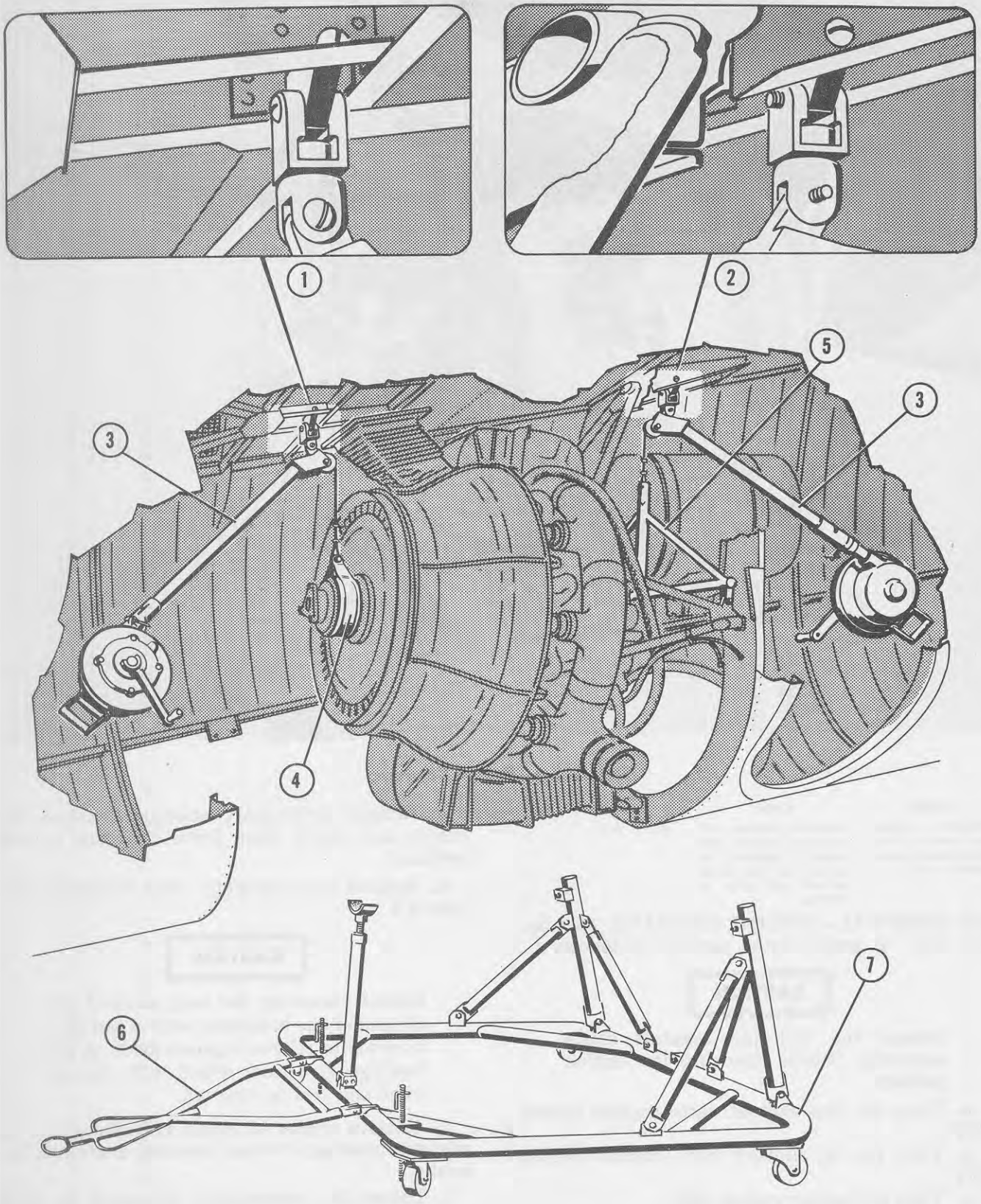

Figure 5-2. Engine Removal

NOMENCLATURE KEY FOR FIGURE 5-2

1 Forward Hoist Fitting (22E5008-1)
2 Aft Hoist Fitting (22E5008-2)
3 Portable Bomb Hoist (R94-BUO 437801 AN-MARK 8 MOD O) or Alternate (R94-BUO 300173-MARK 7 MOD 1)
4 Forward Sling (22E5008-33)
5 Aft Sling (22E5008-4)
6 Engine Dolly Towing Handle (22E5834-1)
7 Engine Dolly (22E5864-1)

2. Oil inlet line at engine mount bulkhead.
3. Oil tank vent line at the engine mount bulkhead above the oil tank.

l. Break the following fuel system connections:

1. Oil dilution line at engine mount bulkhead.
2. Fuel vapor return line at compartment ceiling.

m. Break the following electrical connections:

1. Engine disconnect plug—frame station 521.5.
2. Ignition filter plug—frame station 517.5. (Connect to ground receptacle on engine mount.)
3. Engine disconnect terminal strip—frame station 521.5.
4. Generator shunt—frame station 521.5.
5. Fire detector disconnect plug—frame station 521.5.

n. Detach the following control rods:

1. Throttle at the manifold pressure limiter.
2. Mixture control at the carburetor.
3. Carburetor air heat at the control door.

o. Mount two bomb hoists (3) on the attachments provided, using fitting (1) for the forward hoist and fitting (2) for the aft hoist.

Note

When using a portable bomb hoist, it is mandatory that tension be kept on the cable at all times. A slack cable may jump the grooves of the drum and jam the hoist mechanism, possibly breaking the cable, causing the engine to drop.

p. Place the forward sling (4) around the fan hub coupling and attach it to the forward hoist.

q. Attach the aft sling (5) to the engine mount fittings and to the aft bomb hoist.

r. Absorb the weight of the engine with the two hoists and remove the engine mount attaching bolts.

s. Check to see that all connections to the engine have been broken before attempting to lower the engine from the helicopter. Protect all open fuel and oil lines from dirt and damage.

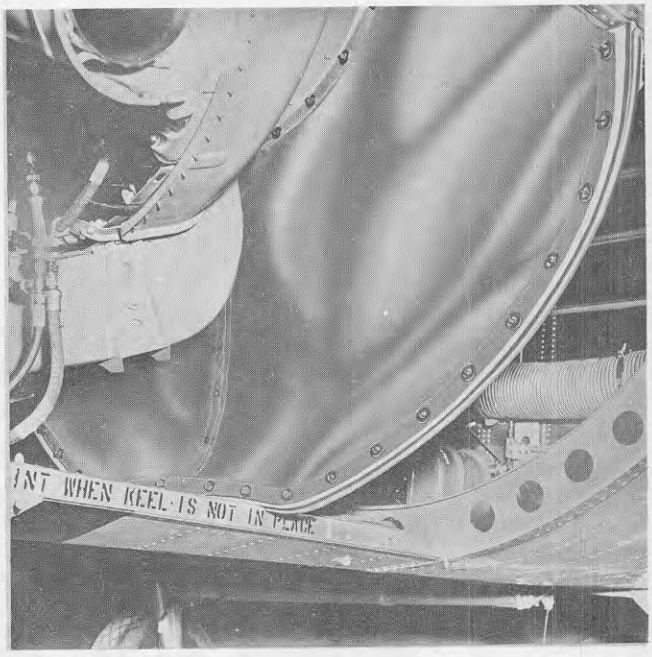

Figure 5-3. Engine Fire Curtain

Note

To gain additional clearance for engine removal, deflate the nose alighting gear shock strut and inflate the main alighting gear shock strut to its maximum extension.

t. Lower the engine to the cradle (7).

u. Oil can be drained from the engine by removing the sump drain plugs.

5-6. ENGINE PACKAGE BUILD-UP.

CAUTION

It is recommended that a new or newly overhauled engine be given a thorough acceptance inspection *prior* to build-up so as to prevent any possible discrepancy from showing up after the engine is ready for installation or after installation.

5-7. GENERAL. The following paragraphs cover the removal and installation procedures for the various components necessary to build up the engine package. Figure 5-4 illustrates the location of each component on the accessory section of the engine plus the various tubes and hoses required to build up the engine package. For details covering all cowling, fan, and ducting installations see Power Plant Cooling System.

5-7A. ENGINE CURTAIN. (See figure 5-3.) To aid in engine cooling by preventing expelled hot

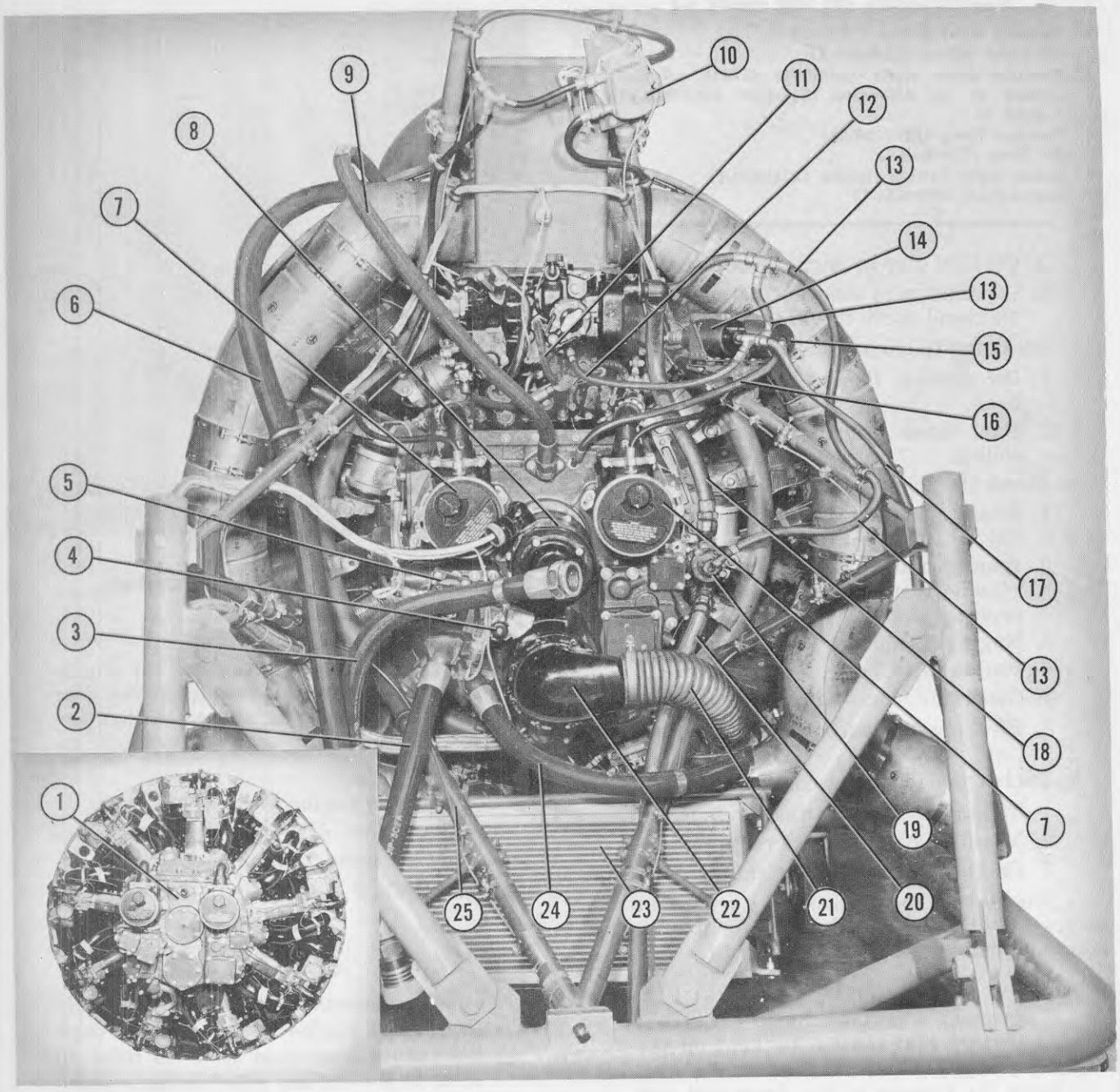

1 Engine (Wright R-1820-103 as received from stock)
2 Oil-In Line
3 Oil Return Line (from cooler)
4 Supercharger Clutch Actuator
5 Tachometer Generator
6 Crankcase Breather
7 Magneto
8 Starter
9 Oil Tank Vent Line
10 Vibrator
11 Carburetor
12 Fuel Pressure Line (to pressure transmitter)
13 Pressure Balance Line
14 Fuel Pressure Line
15 Oil Pressure Transmitter
16 Oil Pressure Line (to transmitter)
17 Oil Dilution Line
18 Fuel Line (pump to carburetor)
19 Fuel Pump
20 Fuel Line (to pump)
21 Generator Blast Tube
22 Generator
23 Oil Cooler
24 Oil Return Line (to cooler)
25 Engine Mount

Figure 5-4. Engine Accessory Section

air from mixing with incoming cool air, a curtain is installed in the engine compartment between the engine stator assembly and the fuselage. In case of an engine fire the curtain also aids in confining the fire to the engine compartment. Suitable slack is maintained to allow for normal engine movement. The curtain is made from black-coated fabric and is held in place with special fasteners.

CAUTION

The curtain must always be properly secured, otherwise it can be sucked into the engine cooling fan.

5-8. EXHAUST COLLECTOR RING. (See figure 5-5.)

5-9. REMOVAL. The exhaust collector ring is removed as follows:

a. Remove the collector ring shroud.

b. Separate the clamp and slip joint flanges of the collector ring weld assemblies.

c. Remove the nuts which attach the weld assemblies to the cylinder exhaust ports and remove the collector ring sections.

5-10. INSTALLATION. To install the collector ring, reverse the removal procedure, using all new attaching nuts. Apply Fel-Pro, C-5 (Felt Products Manufacturing Co, Chicago, Ill.) high temperature lubricant liberally to the contact areas of all the slip joints before assembling collector ring. Apply a light coating of a mixture consisting of 10 per cent molybdenum disulphide, Spec MIL-L-7866, and 90 per cent grease, Spec MIL-L-3545 to the threads of the cylinder exhaust port studs. This mixture may also be applied to the exterior of the exhaust port stud nuts to retard corrosion. Torque attaching nuts to 160–180 pound-inches.

Note

To eliminate the possibility of overtightening, all clamps on the exhaust collector ring should be tightened to a snug fit which will just allow the clamp to be rotated by hand.

5-11. EXHAUST COLLECTOR RING SHROUD. (See figure 5-6.)

5-12. REMOVAL. Remove shroud as follows:

a. Remove the clamps which hold the sections of shrouding together.

b. Remove the clamps which hold the half sections together.

c. Remove the shrouding.

5-13. INSTALLATION. To install the shrouding, reverse the removal procedure. The shrouding is installed after the weld assemblies of the collector ring are in the proper position on the cylinders. When installing the clamps (17), locate the mechanical toggle in a position directly over a shroud support to provide a more even distribution of stress.

Note

To eliminate the possibility of overtightening, all clamps on the collector ring shroud should be tightened to a snug fit which will just allow the clamp to be rotated by hand.

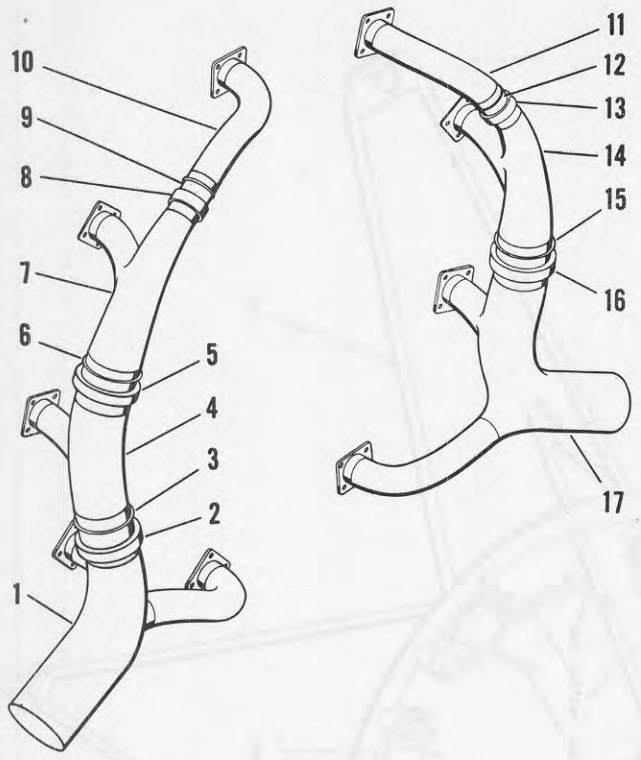

1	Weld Assembly	10	Weld Assembly
2	Clamp	11	Weld Assembly
3	Slip Joint Flange	12	Slip Joint Flange
4	Weld Assembly	13	Clamp
5	Clamp	14	Weld Assembly
6	Slip Joint Flange	15	Slip Joint Flange
7	Weld Assembly	16	Clamp
8	Clamp	17	Weld Assembly
9	Slip Joint Flange		

Figure 5-5. Exhaust Collector Ring

Apply Fel-Pro, C-5 (Felt Products Manufacturing Co, Chicago, Ill.) high temperature lubricant liberally to the following contact areas of the exhaust shroud:

a. All shroud spring supports.

b. Inside surfaces of the doublers.

Agitate the lubricant before and during application.

5-14. ENGINE MOUNT. (See figure 5-7.)

5-15. GENERAL. The engine mount is a welded truss-type structure consisting of a mounting ring and supporting tubes and is made entirely of steel. Attachment of the engine to the mounting ring is effected through eight dynafocal absorber assemblies bolted to fittings, which in turn are welded to the inner radius of the mounting ring. Hoisting lugs and attachment fittings are welded to the support tubes. The cluster joints are reinforced by gussets.

5-16. REMOVAL. (See figure 5-7.) To remove the engine mount from the engine disconnect the dynafocal blast tubes from the engine baffle and detach four bonding jumpers (5) from the engine. Remove the engine attaching bolts (2 and 4) and nuts and remove the mount from the engine.

5-16A. INSTALLATION. (See figure 5-7.) To install the engine mount on the engine, raise the engine mount into position. Place a spherical washer (16) on each of the bracket bolts (4) with the curved side toward the engine. Install the bracket bolts through the dynafocal absorbers, spacers (14), and engine mounting bosses. Place washers (one or two, as required) over the bracket bolts and install the retaining nuts. Tighten the bolts to a torque of 800–1000 pound-inches.

Note

The tie bars (3) which are not attached to dynafocal absorbers attach directly to

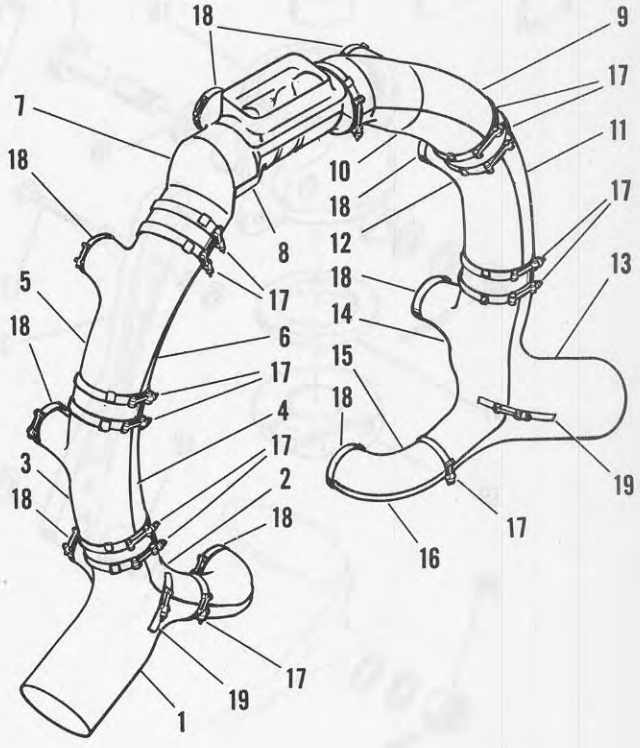

1	Shroud Section	11	Shroud Section
2	Shroud Section	12	Shroud Section
3	Shroud Section	13	Shroud Section
4	Shroud Section	14	Shroud Section
5	Shroud Section	15	Shroud Section
6	Shroud Section	16	Shroud Section
7	Shroud Section	17	Shroud Clamps
8	Shroud Section	18	Cylinder Clamps
9	Shroud Section	19	Shroud Section Strap
10	Shroud Section		

Figure 5-6. Exhaust Collector Ring Shroud

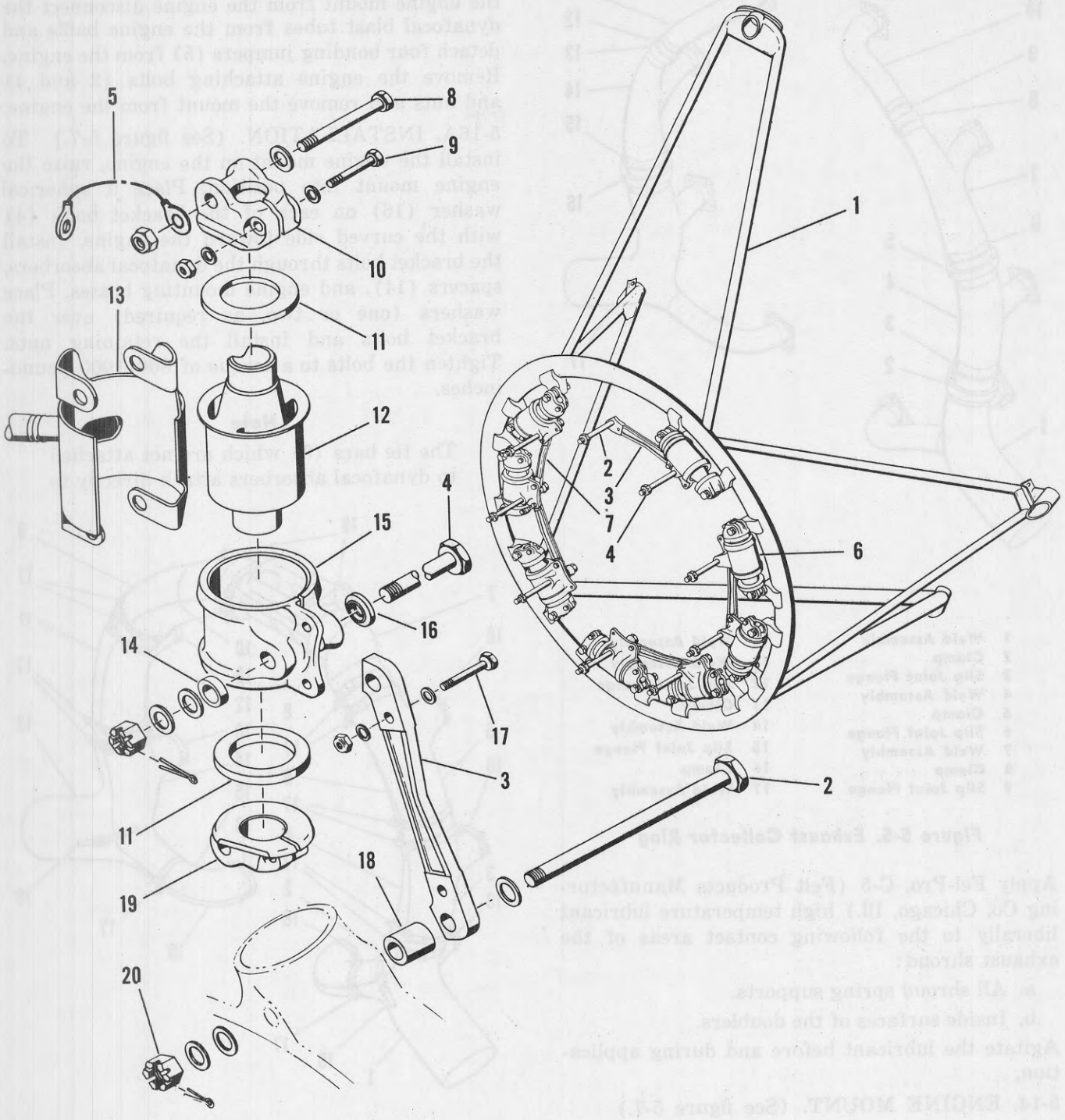

1	Eight Dynafocal Mount	8	Mounting Ring Bolt	15	Mounting Bracket
2	Mount Attachment Bolt	9	End Plate Bolt	16	Spherical Washer
3	Double Tie Bar	10	End Plate	17	Tie Bar Bolt
4	Mount Attachment Bolt	11	Snubbing Washer	18	Spacer
5	Bonding Jumper	12	Tube-Form Mounting	19	End Plate
6	Dynafocal Assembly	13	Blast Tube Shield	20	Nut
7	Single Tie Bar	14	Spacer		

Figure 5-7. Engine Mount and Dynafocal Assembly

the engine. When installing the engine attaching bolts at these locations, special spacer (18) must be used between the bar and the engine mounting boss.

Attach the four bonding jumpers (5) to the engine.

5-16B. DYNAFOCAL ABSORBERS.

5-16C. GENERAL. The dynafocal absorbers used on H-21 model helicopters are of the cored-out type. This type absorber consists principally of three elements: the outer bracket which is connected rigidly to the engine mounting bosses, the tube-form mounting which is the flexing element, and the inner element which is bolted to the engine mount ring through end plates. Snubbing washers located between the end plates and the outer bracket limit motion under extreme loading conditions.

Note

When replacement of an engine dynafocal absorber becomes necessary, be certain that the part number is identical to the one being replaced. Due to the differences in vibration damping characteristics, the types must not be mixed on an engine mount.

5-16D. REMOVAL AND DISASSEMBLY. (See figure 5-7.) The dynafocal absorbers may be removed from the engine mount ring and disassembled as follows:

a. Remove the tie bar bolts (17) and remove the tie bars (3 and 7).

b. Remove the mounting ring bolts (8) and remove the absorbers from the ring. The dynafocal blast shield (13) and the bonding jumpers (5) will come off with the absorbers.

c. Loosen the end plate bolts (9) and slip the end plates (10 and 19) from the tube-form mounting (12) of the absorber. Remove the snubbing washers (11).

d. Slide the tube-form mounting (12) from the outer bracket (15).

5-16E. CLEANING AND INSPECTION. Check the units of the dynafocal absorbers as follows:

a. Wipe excess oil and dirt from the tube-form mounting (12) and the snubber washers (11).

CAUTION

Do not use cleaning solvents on rubber parts.

b. Wash all metal parts in a cleaning solvent conforming to Federal Spec P-S-661.

c. Magnetic particle inspect all steel bolts and replace defective bolts. Examine aluminum parts for cracks, nicks, and signs of corrosion; replace parts if excessive defects are noted.

d. Inspect rubber parts for separation between metal and rubber, flex cracking in the rubber body, permanent set in the rubber, or excessive swelling due to oil or engine cleaning fluid. Replace rubber parts if any of the following conditions are found to exist in the tube-form mounting:

1. Separation between rubber and metal parts has progressed around the circumference approximately 120 degrees or reached a depth of one-half inch at any point.
2. Flex cracking or surface failures in the rubber has reached a depth of one-quarter inch.
3. Permanent set of the rubber (the amount by which the mounting fails to return to neutral position under no load) exceeds 0.100 inch radially; or load end extension from end of inner member is less than 1.44 inches.
4. Excessively swollen or cut rubber snubbing washers.

Note

It is not probable that oil swelling will be sufficient cause to reject mountings, except as it may affect other factors.

5-16F. REASSEMBLY AND INSTALLATION. (See figure 5-7.) Reassemble dynafocal absorber as follows:

a. Insert the tube-form mounting (12) into the outer bracket (15) with the flange on the housing of the tube-form mounting at the same end of the outer bracket as the chamfer on the bracket bore and with the locating tab engaged in the saw cut of the bracket.

b. Slip the snubbing washers (11) and end plates (10 and 19) on the ends of the tube-form mountings.

c. Place the dynafocal blast shield (13) around the absorber assembly.

d. Install the absorber assembly on the engine mount ring and install the mount ring bolts (8). Attach the four bonding jumpers (5).

CAUTION

All paint and non-conducting matter must be removed before installation from the mating surfaces of the end plates, dynafocal blast tube shields and engine mount rings where the bonding

jumpers will be attached. This is done to provide a low resistance electrical circuit to ground for the starter and other electrical accessories mounted on the engine. If a poor bond exists, a high resistance electrical circuit will be created and will seek ground via the engine drive shaft and central transmission. This condition will cause electrical erosion of the engine drive shaft and clutch plates.

Tighten the nuts on the mount ring bolts to 375–450 pound-inches torque if used on the first type of mount assembly and 325–400 pound-inches torque if used on the second type of mount assembly.

e. Tighten the end plate bolts (9) to 60–80 pound-inches torque.

f. When the dynafocal absorbers are being installed on the engine mount ring, install the single tie bar (7) and four double tie bars (3) as shown in figure 5-7. Secure the bars to the outer bracket of the dynafocal absorber with the tie bar bolts (17). Install the engine attaching bolts (2 and 4).

Note

The mount attachment bolt (2) must be installed as shown in figure 5-7. There is a special notch on the head of this bolt which provides the required clearance so it can be removed or installed without interfering with the carburetor mounting bolts.

5-17. STARTER. (See figure 5-4.)

5-18. REMOVAL. The starter is removed from the engine as follows:

a. Break the electrical connection to the starter.

b. Loosen the attaching nuts on the accessory case.

c. Twist the starter clockwise until the enlarged holes in the mounting flange center under the attaching nuts and remove the starter from the engine.

Note

When a Jack and Heintz starter is installed, provide an (AN781-2) nipple to cover the power lead from the starter.

5-19. INSTALLATION. To install the starter, use a new gasket and reverse the removal procedure. Check to see if one AN washer has been installed under each nut, making sure the washer is not between the starter flange and the engine. Tighten the mounting nuts with special engine wrench (801081 or 84654) to a torque of 275–300 pound-inches.

Note

Whenever the starter or starter inspection cover is removed, it must be reinstalled in its original position to insure adequate clearance for the inspection cover bolts.

5-20. STARTER OIL SEAL AND COUPLING.

5-21. REMOVAL. Remove the starter oil seal and coupling as follows:

a. Using wrenches (Special Engine Tool) on the attaching nuts, remove the starter from the engine. Remove the gasket.

b. Remove the 12 attaching screws from the accessory drive and starter shaft oil seal packing retaining ring in the center of the starter pad. Use three attaching screws and pull the ring. Remove ring gasket, accessory drive and starter shaft oil seal packing, starter coupling, spring and spacer.

5-22. INSTALLATION. Install the starter oil seal and coupling as follows:

a. Install the starter coupling spacer and the starter coupling. Install the accessory drive and starter shaft oil seal packing, flat side down, and retain with a gasket and retaining ring. Attach temporarily with four screws equally spaced.

b. Using a depth gage, measure the distance from the starter pad to the tip of the starter coupling jaw. The measurement should be 1.699–1.704 inches. If the clearance is incorrect, select a starter coupling spacer to bring the clearance within limits.

c. Measure the tension of the starter coupling spring. When the spring is compressed to 0.89 inch, the load must be a minimum of 47 pounds.

d. Install starter as per paragraph 5-19.

Note

If it is necessary to machine the starter coupling spacer in order to obtain the required measurement, maintain the chamfer at both ends to preclude interference with mating parts.

e. Using a new gasket, install the starter, washers and nuts. Tighten the attaching nuts with wrenches (Special Engine Tools) to a torque of 60–75 pound-inches.

5-23. GENERATOR. (See figure 5-4.)

5-24. REMOVAL. The generator is removed from the engine as follows:

a. Break the electrical connection to the generator.

b. Loosen the clamp and disconnect the generator blast tube.

Note

The generator blast tube support is mounted on the accessory drive section of the engine on the YH-21 and some H-21A helicopters[19]. On later H-21A helicopters[5] and on all H-21B and H-21C helicopters, the lower right-hand engine accessory drive section has been removed. The generator blast tube support on these helicopters is mounted on the supercharger rear cover.

c. Remove the attaching nuts on the accessory case with special engine wrench (801080).

d. Remove the generator.

5-25. INSTALLATION. To install the generator, use a new gasket and coat the generator drive with a compound conforming to Federal Spec VV-P-236, and then reverse the removal procedure. Tighten the mounting nuts with special engine wrench (801080) to a torque of 275–300 pound-inches.

5-26. GENERATOR DRIVE OIL SEAL.

5-27. REMOVAL. Remove the generator drive oil seal as follows:

a. Remove the generator as outlined in paragraph 5-24.

b. Remove the six generator drive oil seal attaching screws. Remove the oil seal and gasket.

5-28. INSTALLATION. Install the generator drive oil seal as follows:

a. Install the generator drive oil seal gasket and the seal with the part marked T toward the top. Attach with six screws.

b. Install generator as per paragraph 5-25.

5-29. PRIMING SYSTEM.

5-29A. DESCRIPTION. Two types of priming systems are utilized on the H-21 helicopter. They are known as the one point and the two point systems. The two point system, which is used on early production helicopters, consists of a flexible hose from the electric priming valve on the carburetor to a T-fitting, supported by a bracket on the center of the carburetor. From the T-fitting are routed two flexible hose, one to each priming point on the left and the right adapter. The one point priming system consists of a flexible hose from the electric priming valve on the carburetor to a fitting on the left side of the carburetor adapter and the tube is supported by a bracket attached to the carburetor. The one point priming system is being used on later production helicopters.

5-30. REMOVAL. Remove the priming system as follows:

a. Disconnect the priming hose from the elbow fitting in the priming valve housing on the carburetor and from the T-fitting on the support bracket. Remove the hose.

b. Disconnect the right and left priming hose from the elbows in the carburetor adapter.

c. Remove the supporting bracket nuts and take off the bracket and hose. Disconnect the hose from the T-fitting. Remove the T-fitting from the bracket, if necessary.

d. Remove the two lower left-hand acceleration pump cover bolts and install the supporting bracket. Replace the nuts and torque to 35–40 pound-inches. Tighten the T-fitting attaching nuts.

e. If it is necessary to remove the fitting from the priming valve housing, remove the cover to gain access to the fitting.

5-31. INSTALLATION. Install the priming system as follows:

a. If the elbow has been removed from the primer solenoid valve housing, remove the housing cover and reinstall the elbow. Replace the cover.

b. Apply a suitable sealing compound to the threads of the two priming tube elbows after making sure they incorporate a 0.091-inch restriction and install the elbows.

Note

Be careful to keep sealing compound out of the ends of the nozzles.

c. Attach the T-fitting to the priming tube bracket loosely with a washer and nut. Attach the left and right hose fitting assemblies to the left and right sides of the T-fitting.

d. Remove the two nuts from the carburetor body and install the bracket assembly, placing the left side first. Fasten with the nuts. Tighten the T-fitting attaching nuts.

e. Attach the three priming hose and fitting assemblies and tighten the coupling nuts.

CAUTION

Do not use primer until engine has turned over for approximately three seconds. This forestalls the possibility of raw fuel entering the lower cylinders and causing hydraulic lock.

5-31A. COLD WEATHER OPERATION. When the helicopter is to be operated in a cold weather area the 2-point priming system must be modified to a single point system. This is accomplished as follows:

[5] Ser No. 51-15248 and subsequent.

[19] Ser No. 51-15238 thru 51-15247.

a. Remove the primer lines from the T-fitting located below the base of the carburetor on the aft end of the engine.

b. Remove the T-fitting from the mounting bracket.

c. Block off the outlets of the T-fitting to the right and left side of the carburetor by soldering them closed with silver solder.

d. Drill an 0.040-inch hole in the *left* outlet, using a number 60 drill. Right outlet will remain blocked off.

e. Identify the modified T-fitting by painting it red.

f. Assemble the primer system as previously installed.

Note

The 1-point priming system is also satisfactory for warm weather operation.

5-32. FUEL PUMP.

5-33. For details concerning installation and adjustment of the engine driven fuel pump, see Power Plant Fuel System in this section.

5-34. CARBURETOR. (See figure 5-4.)

Note

Fuel which has been allowed to remain in an unused carburetor will oxidize, causing rapid deterioration of diaphragm and seals and depositing a gummy substance within the carburetor which might interfere with normal operation of the carburetor. When it is known that the carburetor is to be out of service for more than 10 days, drain the carburetor of all fuel and moisture and inject clean oil, Spec MIL-L-6082, grade 1065, at 10 psi through the fuel inlet. Continue injecting oil until oil flows from the discharge bar.

5-35. REMOVAL. Remove the carburetor from the engine as follows:

a. Disconnect all hose, tubes, electrical connections, and control push rods to the carburetor.

b. Remove all carburetor attaching nuts except the two at the forward corners.

c. Partially back off each of the two nuts at the forward corners and tilt the carburetor aft until it clears the rest of the engine.

d. Remove the two remaining nuts and remove the carburetor.

e. Remove the gasket and place a suitable cover over the induction passage.

5-35A. PREPARATION FOR USE AFTER STORAGE. Drain all preserving oil from carburetor as follows:

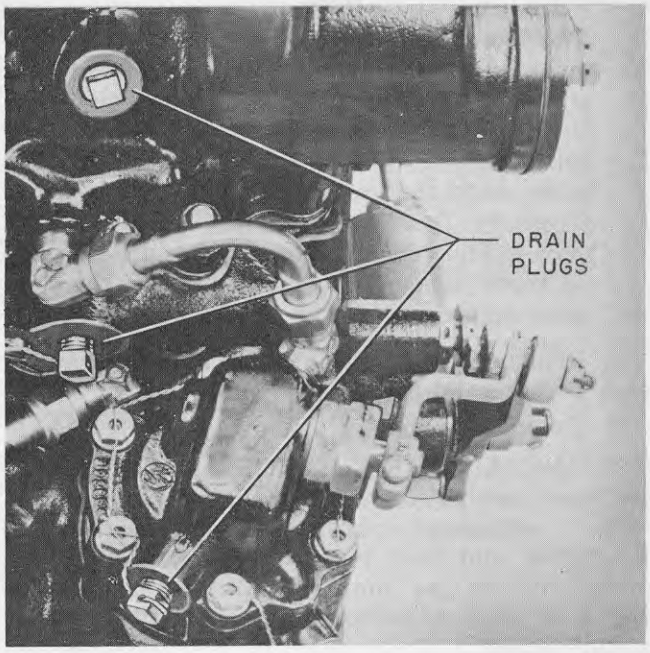

Figure 5-7A. Carburetor Drain Plugs

a. Remove the three drain plugs, as shown in figure 5-7A, and drain all preserving oil. Loosen the strainer retaining bolt about three turns.

CAUTION

Care must be exercised to avoid introducing oil into the air chambers of the regulator unit or to contact the air-metering portion of the carburetor.

b. Flush the carburetor by applying a fuel pressure of 14–16 psi to the fuel inlet connection, tightening the strainer retaining bolt, and installing the plugs one at a time as a clear flow of fuel is noted at the openings.

c. Continue injecting fuel until a clear flow of fuel is noted at the discharge nozzle.

Note

To prevent the possibility of lean operation on initial engine run-up, installed carburetors must be further vented by loosening the 1/8-inch pipe plug in the top of the fuel control unit. After allowing sufficient time for trapped air to be eliminated, tighten plug while still maintaining fuel pressure to the carburetor.

d. Install all plugs and covers and allow the carburetor to stand, filled with service fuel, for a period of eight hours. This soaking period is important as the carburetor was originally calibrated with all its fuel diaphragms thoroughly soaked with fuel, and these diaphragms must be

restored to this condition before the carburetor can be expected to function properly.

CAUTION

Under no circumstances allow the same fuel to remain in the carburetor for a period exceeding 10 days, as a chemical reaction will take place between the fuel and the diaphragms resulting in diaphragm failure.

5-36. INSTALLATION. The carburetor is installed as follows:

Note

If a new carburetor is to be installed, remove the drain plugs and drain all preserving oil. Soak the carburetor for at least eight hours in gasoline to swell the gaskets.

a. Remove the cover from the induction passage and place a gasket on the carburetor mounting pad.

b. Place the carburetor on the mounting studs. Tilt the carburetor backwards and install the spherical washers and nuts on the two studs at the forward corners of the carburetor. Install the spherical washers and nuts on the remaining attaching studs.

c. Reinstall the various external connections to the carburetor.

d. Check the idle rpm and mixture adjustments as outlined in Power Plant Maintenance in this section.

5-37. SUPERCHARGER CLUTCH CONTROL ACTUATOR. (See figure 5-8.)

5-38. REMOVAL. The supercharger clutch control actuator is removed as follows:

a. Disconnect the two oil lines at the actuator.

b. Break the electrical connections.

c. Loosen the lock nut (1) on the clutch control shaft.

d. Remove the four mounting nuts.

e. Thread adapter rod (2) from clutch control shaft and remove actuator.

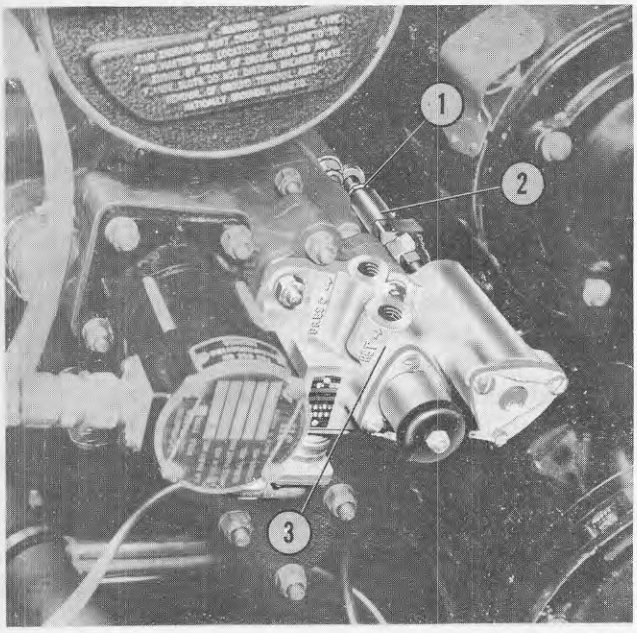

1 Lock Nut
2 Adapter
3 Clutch Actuator

Figure 5-8. Supercharger Clutch Actuator

5-39. INSTALLATION. Install the supercharger clutch control actuator as follows:

a. Place the clutch control shaft in the LOW blower position (shaft in).

b. Place the actuator on the mounting pad and thread adapter (2) on the clutch control shaft until the actuator is fully extended.

c. Install mounting nuts and torque to 50–70 pound-inches.

d. Tighten lock nut (1) and safety adapter.

e. Connect the two oil lines.

f. Connect electrical leads.

5-40. TACHOMETER GENERATOR.

5-41. REMOVAL. Remove the engine tachometer generator as follows:

a. Disconnect the electrical leads to the unit.

b. Remove the attaching nuts and remove the tachometer generator.

5-42. INSTALLATION. To install the tachometer generator, reverse the removal procedure. Torque the mounting nuts to 50–70 pound-inches.

5-43. TACHOMETER DRIVE SHAFT OIL SEAL.

5-44. REMOVAL. Remove the tachometer drive shaft oil seal as follows:

a. Shut off the oil feed from the supply tank. Remove the tachometer generator and gasket from its mounting pad.

b. Remove the two remaining nuts and washers which hold the tachometer drive housing cover to the housing. Withdraw the cover.

c. Pull the two oil seals from the cover using puller (Special Engine Tool). Turn the lock on the puller to release the clamps. Install the clamps through the oil seal and lock them in position. With the puller held firmly against the tachometer cover, pull the oil seal.

5-45. INSTALLATION. Remove the tachometer drive shaft oil seal as follows:

a. Install new oil seals in the tachometer drive shaft housing cover. Use installing tool (Special Engine Tool) which is made up of a base and a plug. Place the base, counterbored end up, on a bench. Hold the tachometer drive shaft gear housing cover and insert the tool plug through the seal cover into the base. Use mallet or light arbor press to force the seal into the cover.

b. Place a gasket on the tachometer drive housing. Insert installing tool (Special Engine Tool) in each of the tachometer gears to guide the oil seals over the shafts. Install the tachometer gear housing cover.

c. Attach the cover with two washers and nuts. Reinstall the tachometer generators. Install new gaskets.

d. Open the valve from the oil supply tank.

5-46. SPARK PLUGS.

5-47. REMOVAL. Disconnect the ignition lead and pull the plug lead straight out. Cover the terminal with a suitable protector. Remove the plug with a socket wrench and remove the spark plug gasket. Install a substituting plug and gasket in the spark plug hole. Remove a spark plug which has seized, using one of the following methods:

a. Apply a mixture of ether and penetrating oil to loosen the hard carbon.

b. Install a conical metal adapter which has a hole at the apex, just large enough to accommodate the spark plug, and a hole at the base just large enough to accommodate the funnel of a carbon dioxide bottle. Apply carbon dioxide to chill the plug. If practicable, apply the carbon dioxide while the cylinder is hot.

c. Vibrate the plug and, at the same time, exert pressure on the wrench in a loosening direction.

d. Remove broken spark plug shells by inserting a screwdriver between the ground electrodes or by using an Ezy-Out.

5-48. INSTALLATION. Install spark plugs as follows:

a. Clean the threads of the plug. If sealing compound is used, it should be applied to the first few threads only.

b. Remove the substituting plug. Install the spark plug with a new gasket and torque to 350–360 pound-inches.

c. Install the ignition lead.

5-49. VIBRATOR.

5-50. REMOVAL AND INSTALLATION. The vibrator is shock mounted on the upper engine mount support tubes. No special instructions are required to remove or install the unit. Be sure to connect the electrical leads after installing the unit.

5-51. INSTALLATION — ENGINE PACKAGE. (See figure 5-2.) The power plant can be installed with most of its accessories attached. The installation procedure is as follows:

a. Raise the engine package into mounting position from cradle (7) using bomb hoists (3) and slings (4 and 5). Raise the engine package slowly and carefully to check clearance and avoid damage to the engine or structure.

WARNING

All personnel should remain clear of the power plant when hoisting.

b. The engine mounting bolts must be magnetic particle inspected in accordance with Spec MIL-I-6868 prior to installation. Install mounting bolts and torque to 850–950 pound-inches. Before installing the mounting bolts on the H-21B and H-21C helicopters, coat the mounting cones with Paralkeytone, Spec MIL-C-6708, type I. Install the mounting bolts and torque to 950–1050 pound-inches. This increase in torque value is necessitated by the increase in the power rating of the H-21B and H-21C engine.

CAUTION

Examine all fuel and oil line connections to make certain that dirt is not left in the line.

c. Attach the following power plant control push rods:

1. Throttle.
2. Mixture control.
3. Carburetor air heat.

d. Make the following electrical connections:

1. Engine disconnect plug—frame station 521.5.
2. Ignition filter plug—frame station 517.5.
3. Engine disconnect terminal strip—frame station 521.5.
4. Generator shunt—frame station 521.5.
5. Fire detector disconnect plug—frame station 521.5.

e. Make the following fuel line connections:

1. Oil dilution line at engine mount bulkhead.
2. Fuel vapor return line at compartment ceiling.

f. Make the following oil line connections:

1. Oil return line at engine mount bulkhead.
2. Oil inlet line at engine mount bulkhead.
3. Oil tank vent line at engine mount bulkhead above oil tank.

g. Attach transmission oil cooler duct.

h. Install engine oil cooler air duct.

i. Install keel assembly (see Fuselage, Section II).

j. Install the engine fire curtain (figure 5-3 .

k. Install drive shaft assembly between engine and clutch (see Drive Shafting in this section).

l. Check security of all connections.

m. Check entire engine installation for security of all safety wiring.

n. Check rigging of power plant controls as outlined in Power Plant Controls Rigging Procedure in this section.

o. Connect battery leads.

p. Install engine compartment hatches.

q. Engine must be pre-oiled as outlined in paragraph 5-56.

CAUTION

Engine operation is not allowed while the engine is preserved with preservation oil, Spec MIL-C-6529A.

5-52. POWER PLANT MAINTENANCE.

5-53. GENERAL. The following paragraphs cover the maintenance procedures necessary to maintain the helicopter engine. Most of the operations can be completed with the engine installed in the helicopter. Several special tools, designed by the engine manufacturer, are required to perform the various engine maintenance operations. These tools are illustrated in figure 1-28. The tools are listed with their respective part numbers under Special Tools, Section I.

CAUTION

All parts have been properly identified by the contractor. However, if for any reason it becomes necessary to reidentify parts, extreme care should be exercised. Because of the possible build-up of stress concentrations, impression stamping or permanent etching must not be used on any parts unless specific instruc-

tions are given in this handbook. The use of rubber ink stamp or the tagging of parts is acceptable.

5-54. LUBRICATION.

5-55. GENERAL. The engine lubrication system is a full pressure, dry sump type. Supplementary lubrication to the engine is not required. However, prior to the initial start of an engine that has been newly installed, whether new or overhauled, or a helicopter that has been removed from permanent or temporary storage, or if an engine has remained idle for more than 72 hours, the engine must be pre-oiled. The start of an engine must be accomplished within two hours after the pre-oiling. If the two hours has elapsed since the engine was pre-oiled, the complete pre-oiling procedure will again be accomplished before attempting the initial start of the engine.

5-56. PRE-OILING. Pre-oiling is accomplished as follows:

a. Turn the ignition switch OFF and place the carburetor mixture control lever at IDLE CUT-OFF.

b. Fill the hopper and oil tank until the oil level stabilizes at the edge of the oil tank filler neck.

c. Remove the front spark plugs and the magnetic drain plugs from the front oil sump and the supercharger rear housing.

d. Remove the oil pump check valve and rotate the crankshaft manually or with the starter until a stream of oil flows from the check valve port, indicating evacuation of air from the oil pump. Replace the check valve.

Note

If the crankshaft is rotated with the starter, utilize an external power source to prevent discharging the battery.

e. Evacuate air from a suitable pre-oiling apparatus and connect the apparatus to the pre-oiling port after removing the quarter-inch plug which closes the pre-oiling connection.

f. Disconnect the oil pressure transmitter line, rotate the crankshaft, purge the line of air, and, when oil flow is established, reconnect line.

g. Pump clean engine oil, Spec MIL-L-6082, grade 1100, at 38–79°C (100–175°F) into the engine, maintaining a pressure of 30–50 psi by means of a pre-oiling pump and rotate the engine with the starter. To avoid opening the pressure relief valve and permitting the oil to return to the inlet side of pump, do not exceed maximum pressure. The quantity required to pre-oil a given engine model is the amount necessary to provide a continuous dripping or flow from the upper rocker arms. This quantity, plus 25 per cent additional, should be the standard requirement.

Oil Temperature	Per Cent Dilution By Volume
16 to 38°C (60 to 100°F)	10%
—1 to 16°C (30 to 60°F)	20%
—18 to —1°C (0 to 30°F)	30%
Below —18°C (Below 0°F)	40%

h. Reinstall the magnetic drain plugs and the front spark plugs. Disconnect the pre-oiling apparatus and reinstall the pre-oil plug.

i. Fill the oil tank hopper to capacity.

j. Turn the engine crankshaft with the starter for a maximum of 20 seconds. Oil pressure must be attained before the end of this period.

CAUTION

If oil pressure does not register within 20 seconds, the engine must not be started until the condition causing lack of pressure has been found and corrected. (See Troubleshooting in this section.) The engine must be pre-oiled again.

k. Refill the hopper to capacity, if required.

l. Start the engine and run for two minutes, then shut down.

m. Refill the oil tank hopper to capacity.

Note

If pressure pre-oil equipment is not available, steps d., f., and i. through m., with the sump plugs reinstalled, may be used as an alternate pre-oil procedure. However, pressure pre-oiling of the engine is preferred because it provides better internal lubrication to the engine before starting. In no case should the alternate method be used for newly installed engines or engines which are to be depreserved.

5-56A. PRESSURE PRE-OILING EQUIPMENT. Pre-oiling of the engine may be accomplished by using any of the following pre-oiling apparatus:

a. Pre-oil tank, aircraft engine, type B-1 P/N 44G6494, stock no. 8200-898000, class 19-A.

b. Briggs portable oil filtering and clarifying unit, type MC-1, -2, or -3 used as specified in the applicable T.O.

c. Any mechanical type pre-oiler which will satisfactorily force oil through the engine and remove all trapped air from oil lines and passages.

5-56B. If a. or b. of the above equipment is not available, a simple mechanical pre-oiler may be constructed, using the following parts:

a. Portable tank or container having at least a five gallon capacity.

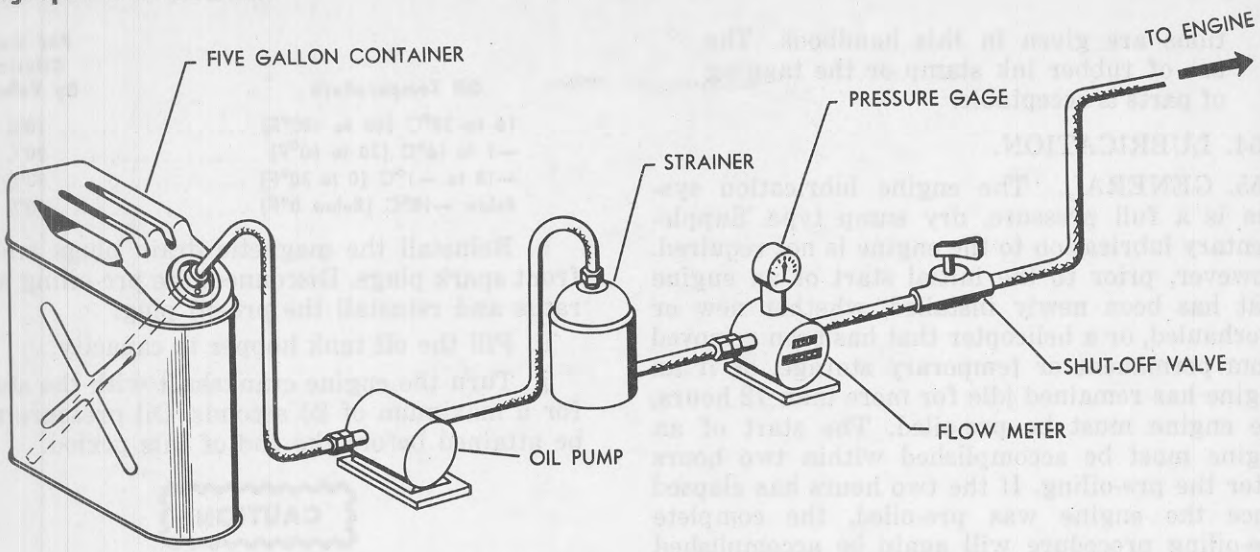

Figure 5-8A. Pressure Pre-Oiling Apparatus

b. Gear type oil pump capable of delivering oil at 40 psi.

c. Oil strainer.

d. Flow meter or pressure gage of the direct reading type if available. If not, any gage capable of registering 40 psi will be adequate.

e. Shut-off valve.

f. Hose, clamps and fittings as required.

g. Heating element if conditions require.

Construct the pre-oiling unit as shown in figure 5-8A. Power for operating the system may be supplied by any external source capable of driving the pump at a speed which will result in the desired pressure of 40 psi.

5-57. OIL PRESSURE ADJUSTMENT. For details concerning the adjustment of engine oil pressure, see Power Plant Lubrication System in this section.

5-58. EVACUATION OF AIR FROM OIL PUMP. Evacuate air from the engine oil pump before pre-oiling or after an oil change as follows:

a. Remove the 0.250-inch pipe plug from the pre-oiling connection at the left side of the rear oil pump.

b. Turn the ignition switch OFF. Place the carburetor mixture control lever at IDLE CUT-OFF. Evacuate air from the oil pump by rotating the crankshaft manually or with the starter until a steady stream of oil is expelled through the pre-oiling connection. If an oil bleed is not

obtained in this manner, remove the oil pump check valve from the passage to the pre-oiling connection. Rotate the crankshaft until a bleed is obtained through the check valve port. Replace the check valve. Now bleed through the pre-oiling connection.

5-58A. DEPRESERVATION RUN. The following instructions, if properly complied with, will eliminate the necessity of removing intake pipes or draining intake pipes prior to installation of the engine in the helicopter. The depreservation run will be accomplished after pre-oiling but before the initial start of the engine.

a. Remove one spark plug from each cylinder. Install depreservation valve, Part No. 55SAA970, (figure 5-8B) in each open spark plug hole. Place a length of hose on depreservation valve to vent the oil from the cylinders thereby eliminating any fire hazard from accumulating oil.

b. With the ignition switch OFF, rotate the engine by using the starter. In cases where cold temperatures exist, the engine will be pre-heated prior to turning. Pickling oil, if present in the intake pipes, will have adequate time to be heated and flow from the intake pipes through the external drain lines or into the combustion chamber, and be expelled into the exhaust system or through the depreservation valve.

c. After all pickling oil has been expelled, install spark plugs, ignition leads, and other electrical connections.

5-58B. ENGINE CHECKS.

a. Start engine in accordance with normal procedures. Warm up until proper lubrication and normal engine operation is established.

b. With the rotors set at a fixed pitch and engaged, open the throttle to obtain 2300 rpm and 25 inches Hg manifold pressure. Move the ignition switch to each single magneto position long enough to determine the engine rpm drop for that switch position. Single magneto operation as long as one minute is not excessive. Also, tap tachometer rim to eliminate any binding of the instrument. Note and record portion that is fast and the portion that is slow. The fast or initial rpm drop is generally an indication of the condition of the spark plugs and ignition harness. The slow drop following the fast drop indicates possible inaccuracy in magneto timing. A drop of 100 rpm or less when operating on one magneto is satisfactory, providing no engine roughness is encountered. This check must be accomplished by a qualified pilot.

c. Refer to the applicable Flight Handbook for take-off checks and procedures.

d. Check and adjust idle speed and mixture as described in paragraphs 5-65 and 5-66. Record engine rpm and manifold pressure. The manifold pressure reading at this speed will reflect the overall condition of the engine. Therefore, to fully evaluate engine performance, it is necessary to keep a record of manifold pressure at idle speed. A frequent review of these manifold pressure readings, as reflected on the cockpit check sheet, will make it possible to detect any abnormal manifold pressure readings at idle speed. An increase in manifold pressure, at idle speed, of two or more inches Hg indicates engine malfunction and should be investigated and corrected prior to further flight.

To be provided at a later date

1 Depreservation Valve

Figure 5-8B. Installation of Depreservation Valve

e. After engine warm-up and *prior to engaging rotors,* check the ignition switch for proper connection of ground wire. Idle the engine on both magnetos at approximately 1000 rpm. Turn the ignition switch OFF momentarily and observe if the engine stops firing. If it stops firing, return the ignition switch to BOTH. Make this check as quickly as possible to prevent engine backfire when the switch is returned to BOTH.

CAUTION

If violent backfiring occurs during ground run of the engine, a shutdown must be made to inspect the engine, induction system, and accessory section for damage.

5-58C. ELIMINATING LIQUID LOCKS.

a. If any indication of lock is noted during engine starting, as explained in the applicable

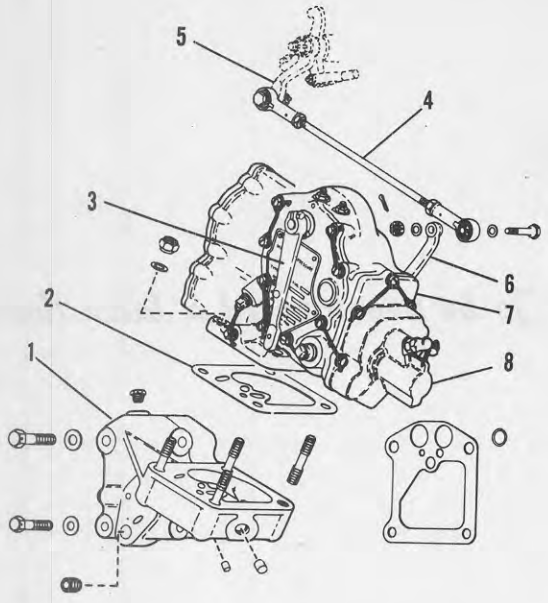

1	Limiter Support	5	Throttle Operating Lever
2	Gasket	6	Drive Lever
3	Main Lever	7	Limiter Unit
4	Connecting Rod	8	Acorn Nut

Figure 5-9. Manifold Pressure Limiter

Flight Handbook, discontinue starting, leaving the crankshaft at the position which the lock is encountered. The viscosity of cold oil will, in most cases, be sufficiently high to prevent its draining out the comparatively small intake pipe drain lines.

b. To accurately and quickly locate the cylinder in which the lock has occurred, it is essential that the crankshaft *not* be moved from the position at which the lock was encountered.

c. Remove the breaker compartment cover from one magneto and locate number 1 lobe on the cam. This lobe is usually identified by a machined dot, adjacent to the lobe, on the edge of the cam.

d. Starting with number 1 lobe, count in the opposite direction of cam rotation to and including the lobe that the contact point follower is resting on. The direction of rotation is indicated by an arrow on the cam.

e. Apply this count to the firing order of the engine. For example: if the follower rests on the fifth lobe of the cam and the firing order is 1-3-5-7-9-2-4-6-8, then No. 9 cylinder would contain the liquid.

f. Remove a spark plug from the cylinder involved and allow the liquid to drain out. Rotate the crankshaft by using the starter for approximately one revolution.

g. Clean the firing end of the spark plug using a cleaning solvent and re-install the plug.

5-58D. ENGINE MAINTENANCE.

a. A sound engine will operate satisfactorily and with a minimum of maintenance if all factors which affect engine operation are maintained at the highest possible standard. The following checks may be accomplished to ascertain if the engine is operating satisfactorily:

Check	Paragraph
Ignition Switch	5-58B
Ignition System	5-58B
Idle Mixture	5-65
Idle Speed	5-65

b. Results of the above may result in the necessity for the following checks:

Check	Paragraph
Ignition Harness	5-72A
Ignition System Timing	5-75
Compression	5-98A
Valve Clearance	5-98

5-59. CARBURETION.

5-60. MANIFOLD PRESSURE LIMITER. **YH-21**

5-61. DESCRIPTION. (See figure 5-9.) The manifold pressure limiter, mounted on the supercharger section of the engine, limits the maximum power available under all conditions to avoid overstressing of YH-21 helicopter transmissions and drive shafts. It also serves to establish the starting speed of the engine under no-load conditions. The unit varies the carburetor throttle opening to limit the maximum manifold pressure with regard to surrounding atmospheric pressure and the position of the supercharger drive (low or high ratio). The manifold pressure limiter contains six separate units. They are:

a. A manual throttle opening mechanism which directly connects the pilot's throttle lever to the carburetor throttle lever.

b. An automatic throttle operating mechanism which operates the carburetor lever as necessary to maintain maximum engine horsepower.

c. A pressure sensitive switch which responds to changes in manifold pressure and automatically moves the carburetor throttle to maintain the maximum power.

d. A hydraulic system which reschedules the power when the supercharger is switched from low to high blower or high to low blower.

e. A throttle positioning mechanism which automatically sets the correct degree of throttle opening for safe engine starts. This mechanism is actuated by moving the cockpit throttle half open and then closing it fully.

f. An automatic mechanism which provides for the circulation of oil through the unit, maintaining the engine oil operating temperature whether the regulator is operating or not.

5-61A. PRINCIPLES OF OPERATION. The manifold pressure limiter is, in effect, a coupling connecting the cockpit control with the carburetor throttle valves. The coupling is mechanical through the entire throttle range, from idle to wide-open. When the manifold pressure reaches the maximum for which the limiter is adjusted and sealed, the manifold pressure, acting as a bellows coupled with an aneroid bellows to compensate for altitude, acts on the servo valve to operate the servo piston which, in turn, operates the carburetor throttle to limit the manifold pressure to the established value. The altitude compensating bellows automatically adjusts the maximum manifold pressure during climb to maintain constant maximum horsepower.

When the engine is stopped and engine oil pressure drops to zero, a cam stop is automatically set to establish the safe maximum throttle opening for restarting. The pilot's throttle control operates through the limiter except when selecting power greater than the value for which the limiter is set.

5-62. REMOVAL. (See figure 5-9.) The manifold pressure limiter may be removed in the following manner:

a. Remove the four bolts which secure the limiter support (1) to the supercharger housing.

b. Remove the four nuts which secure the limiter unit (7) to its support. Lift the limiter unit and gasket (2) from the support.

CAUTION

The manifold pressure limiter is a sealed unit and no disassembly should be attempted. If any malfunctions of the unit occur, see the Troubleshooting instructions paragraph 5-4.

5-63. INSTALLATION. Installation of the manifold pressure limiter is the reverse of removal procedure. Replace any leaking gaskets if necessary.

5-64. ADJUSTMENT. Adjust the manifold pressure limiter as follows:

a. Remove the acorn nut on the rear of the limiter unit and loosen the lock nut beneath it. Turn the set screw in a clockwise direction to its full depth. This action moves the disengaged start cam away from the drive lever inside the regulator so that the regulator can now be moved to the closed throttle position. Hold the limiter in the closed throttle position by turning the main lever (3, figure 5-9) in a counter-clockwise direction. Install the drive lever (6) in a vertical position on the limiter drive shaft. If the splines on the shaft prevent the lever from slipping on the shaft in this position, rotate the lever to the rear enough to engage the nearest spline. Secure the lever to the shaft with a screw and a washer.

b. Rotate the throttle shaft on the carburetor until the throttle is closed against the idle stop. Hold the shaft in this position and install the throttle operating lever vertically, so that it lies 40 degrees forward of the vertical centerline of the engine. Adjust the connecting rod (4) so that the bolts securing it to the throttle operating lever (5) and the limiter drive lever (6) slide freely through the rod ends when the carburetor is closed to idle and the limiter is fully closed.

c. Adjust the main operating lever (3) on its drive shaft in a position to ensure full travel and secure it with a clamping screw.

d. Connect the throttle linkage and advance the throttle slightly to a position for safe disengaged start. Start the engine, warm up, and adjust the idle mixture at the desired idling rpm. Set the desired starting rpm by throttle. Lock the throttle in this position and shut down the engine.

e. Loosen the lock nut on the "disengaged start" adjustment screw and carefully turn the screw in a counter-clockwise direction until, by

ease of turning, the internal cam is felt contacting the internal drive lever face. Tighten the lock nut with the screw in this position.

f. After the limiter has been adjusted, open the throttle control in the cockpit approximately half-way, then close it fully. The limiter will automatically hold the throttle open at the disengaged start position. Once the engine is running, the disengaged start cam moves out of the way so that the carburetor throttle can be closed to the idle position. Repeat this procedure prior to each engine start-up.

g. No adjustments are necessary after the unit is properly set. It may, under some circumstances, be required to reset the starting speed, but this should never be done until the idle mixture has been checked and adjusted as required since the most common cause of a change in starting speed is a shift in idle mixture.

5-64A. MANIFOLD PRESSURE LIMITER CHECK. Whenever a new manifold pressure limiter is installed on an engine, the following check should be performed to insure proper operation of the unit.

Note

The maximum manifold pressures shown in the manifold pressure limiter check are for check purposes only and should not be used for normal engine operation. Maximum manifold pressure for normal engine operation must not exceed 42.4 inches Hg.

a. Start the engine and engage the rotors. Shift the supercharger from low to high blower then back again. The rescheduling arm, which is located near the top of the manifold pressure limiter just under the drive lever (6, figure 5-9), should move to the forward stop in low blower and to the aft stop in high blower.

b. With a qualified helicopter pilot at the controls, fly the helicopter, using a normal mixture setting and low blower. While flying at sea level, open the throttle to obtain full available manifold pressure at 2500 rpm.

CAUTION

Full manifold pressure in low blower must not be less than 46 inches Hg nor more than 47 inches Hg. If necessary, the throttle may be held open for a maximum of two minutes to obtain stabilized readings.

c. Fly the helicopter at an altitude between 10,000 and 13,000 feet, using rich mixture and high blower. Open the throttle to obtain full available manifold pressure at 2600 rpm.

CAUTION

Full manifold pressure in high blower must not be less than 49.5 inches Hg nor more than 51 inches Hg. If necessary, the throttle may be held open for a maximum of two minutes to obtain stabilized readings.

d. If the manifold pressure limiter does not limit the power to within the specified ranges for high and low blower or does not permit the specified power settings to be obtained or does not shift the rescheduling arm when shifting from low to high blower, the limiter must be replaced.

5-65. IDLE MIXTURE CHECK. Disengage the rotors and check idle mixture adjustment as follows:

Note

While making the idle mixture check and adjustments make sure that cylinder head temperatures are at least 150°C (302°F). If the temperatures tend to be lower, operate the engine at 2300 rpm or 25 inches Hg for a short time.

a. With the mixture control in RICH position, adjust the throttle so that the engine idles at 1000 rpm and lock the throttle in position.

b. Flick the primer switch momentarily to enrich the mixture and note any changes in rpm and manifold pressure. A momentary increase in rpm with a decrease in manifold pressure indicates that the mixture, without the primer, is too lean; a momentary decrease in rpm with an increase in manifold pressure indicates that the mixture, without the primer, is either correct or too rich.

c. To determine whether the mixture is correct or too rich, slowly move the mixture control from RICH toward the IDLE CUT-OFF position and note any changes in rpm and manifold pressure. An increase in rpm with a decrease in manifold pressure indicates that the mixture is too rich; a decrease in rpm with an increase in manifold pressure indicates that the mixture is correct for best power.

5-66. IDLE MIXTURE AND RPM ADJUSTMENTS. If the check of idle mixture setting proves that adjustment is necessary, proceed as follows:

a. With the mixture control in RICH position, adjust the throttle so that the engine idles at 1000 rpm. Set the carburetor throttle stop at this position and lock the throttle.

b. Loosen the idle mixture adjustment lock screw. Turn the idle mixture adjuster one notch at a time (clockwise to enrich the mixture and

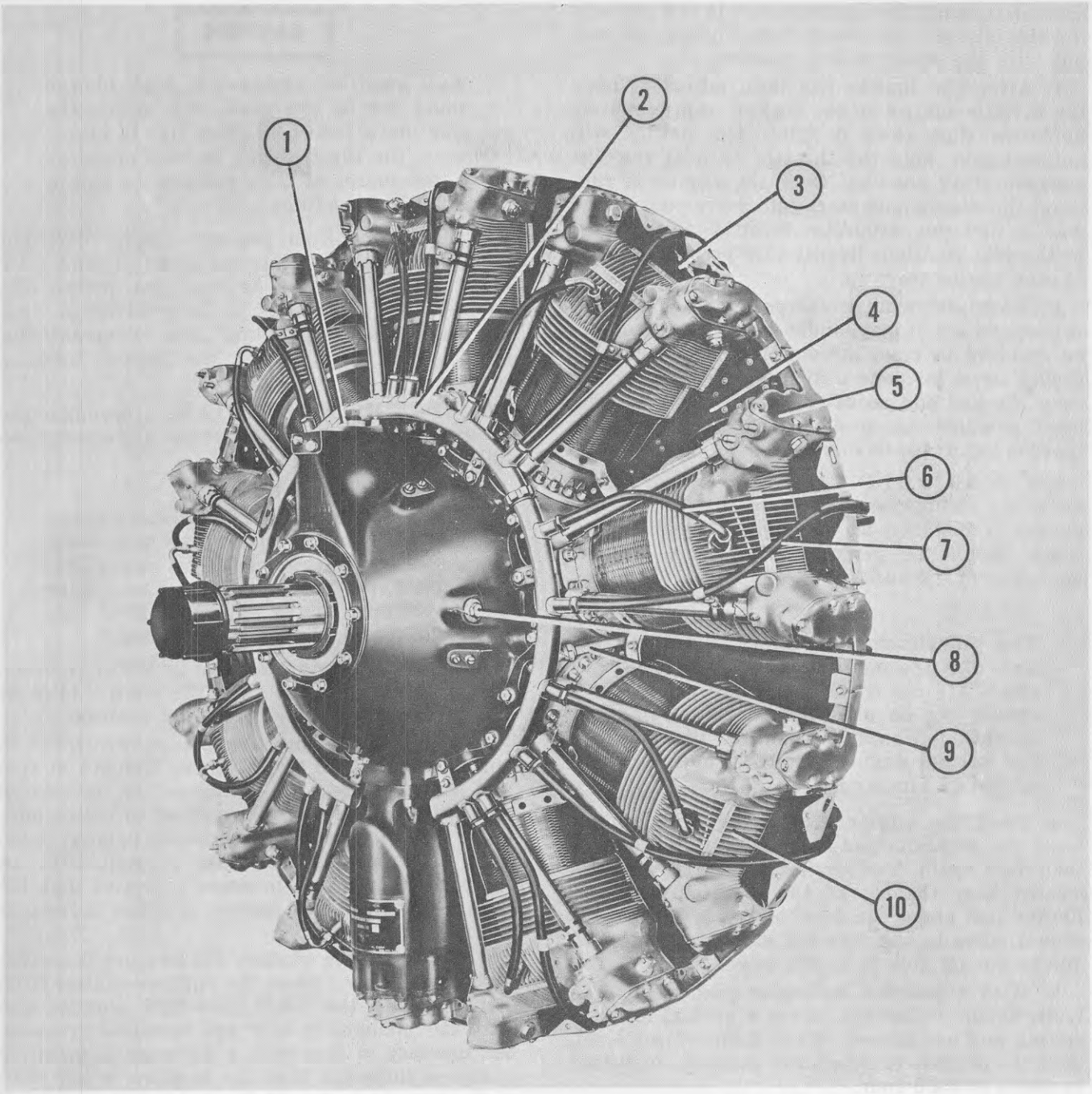

1 Governer Drive Pad
2 Ignition Cable Assembly
3 Cylinder Head Deflector
4 Inter-Cylinder Deflector
5 Rocker Box Cover
6 Front Spark Plug Lead
7 Rear Spark Plug Lead
8 Timing Plug Hole
9 External Oil Supply Tube
10 Cylinder

Figure 5-10. Three-Quarter Left Front View—R-1820-103 Engine

counter-clockwise to lean it) until the highest rpm and lowest manifold pressure are obtained.

c. Readjust the throttle so that the engine idles at 1000 rpm. Set the carburetor throttle stop at this position, lock the throttle and again turn the idle mixture adjuster until the highest rpm and the lowest manifold pressure are obtained.

d. Tighten the idle mixture adjustment screw lock screw and lockwire it.

e. Readjust the throttle so that the engine idles at 1000 rpm and reset the throttle stop. The desired point of operation is where 1000 rpm is obtained at the minimum manifold pressure.

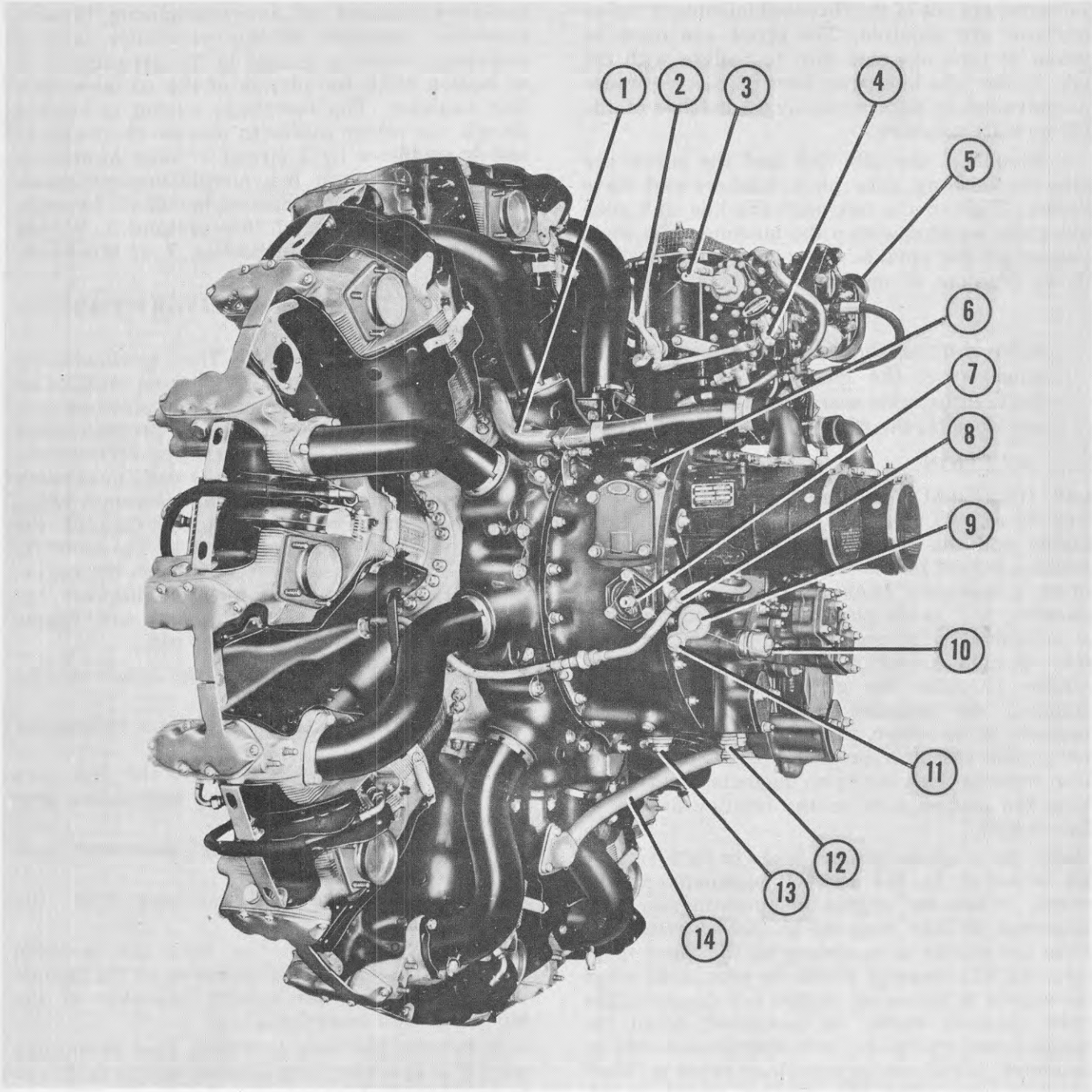

1 Left Ignition Conduit
2 Throttle Control Lever
3 Mixture Control Lever
4 Idle Mixture Control
5 Carburetor
6 Oil Return from Accessory
7 Oil Strainer
8 External Oil Supply Tube
9 Oil Pump Check Valve
10 Oil Pressure Relief Valve
11 Pre-Oiling Connection
12 Thermometer Connections
13 Magnetic Oil Drain Plug
14 Oil Scavenge Tube

Figure 5-11. Three-Quarter Left Rear View—R-1820-103 Engine

Note

When the idle mixture adjuster has insufficient travel to permit correct setting, adjust the linkage to shift the mixture adjustment range.

5-67. Alter the idle mixture range as follows:

a. Disconnect the idle link from the screw eye by removing the link bolt.

b. Thread the screw eye into the threaded bushing if leaner mixtures are required; thread

the screw eye out of the threaded bushing if richer mixtures are required. The screw eye must be moved at least one-half turn to realign with the hole in the idle link. One turn of the screw eye is equivalent to approximately 13 notches of the idle mixture adjuster.

c. Reconnect the idle link and the screw eye with the bushing, four plain washers and wave washer. Tighten the nut until the idle link yoke and plain washers clamp the bushing. The wave washer on the outside diameter of the bushing allows freedom of movement without looseness.

Note

After shifting the mixture adjustment range, reset the idle mixture adjustment. In extreme cases it may be necessary to shift the range several times.

5-68. IGNITION.

5-69. GENERAL. The engine ignition system consists of two magnetos, the ignition cable assembly and the eighteen spark plugs. Magneto troubles, except for those in a distributor, usually affect a complete bank of spark plugs. Cable assembly and spark plug defects usually appear in individual cylinders. Ignition switch and magneto ground wires may also cause ignition trouble. If, after the ground wires are interchanged, the magneto drop shifts from one magneto to the other, the trouble is in the magneto, cable assembly or spark plugs. If the rpm drop remains with the same magneto, the trouble is in the ground wire or the ignition switch in the cockpit.

Check the magneto ground leads to be sure they are attached to the correct terminals at the switch. When the engine is operating on both magnetos, neither magneto should be grounded; when the engine is operating on the right magneto, the left magneto should be grounded; when the engine is operating on the left magneto, the right magneto should be grounded; when the engine is not operating, both magnetos should be grounded. Loose connections may cause a "live" magneto even when the ignition switch is off. If the insulation on a ground lead is chafed through, the lead wire may touch some part of the helicopter and ground the magneto.

5-69A. IGNITION ANALYZER PROVISIONS.

5-69B. DESCRIPTION. Provisions are provided for the use of a Bendix Model 11-4810-1 portable ignition analyzer on certain model H-21C helicopters[39]. This instrument, when installed, will detect, locate, and identify any existing abnormal ignition condition which may lead to, or be causing, engine malfunction. The complete installation consists of a synchronizing breaker assembly, complete wiring provisions, and a receptacle which is located in the aft cabin area at station 359.0 for plug-in of the portable ignition analyzer. The receptacle wiring includes a 28-volt d-c power source to operate the analyzer and is protected by a circuit breaker located on the aft distribution box circuit breaker panel. Refer to the proper operation handbook for technique and utilization of this equipment. Wiring diagrams are located in Section X of this handbook.

5-69C. SYNCHRONIZING BREAKER ASSEMBLY.

5-69D. DESCRIPTION. The synchronizing breaker assembly is an engine-driven mechanism which incorporates a cam-operated, pivotless type breaker assembly timed to close a predetermined number of degrees before the firing of the number one cylinder. The breaker is used to create a signal which in turn triggers the horizontal sweep of the electron beam across the face of the cathode-ray tube in the analyzer. The synchronizing breaker assembly is located on the engine accessory section and is mounted between the engine tachometer generator and the engine tachometer generator mounting pad.

5-69E. REMOVAL. Remove the synchronizing breaker assembly as follows:

a. Disconnect electrical plug from tachometer generator.

b. Cut safety wire and remove the four nuts and washers which secure the tachometer generator to the breaker assembly.

c. Remove the tachometer generator and beraker assembly cover.

d. Disconnect the electrical plug from the breaker assembly.

e. Remove the four hex nuts and washers which secure the breaker assembly to the mounting pad, and lift the breaker assembly off the mounting stud extensions.

f. Remove the four mounting stud extensions only if a synchronizing breaker assembly is not to be reinstalled.

5-69F. INSTALLATION. Install the synchronizing breaker assembly as follows:

a. Install the four breaker mounting stud extensions on the tachometer drive pad studs (unless already installed) and tighten securely.

b. Place the circular gasket over the pilot of the breaker assembly and install it on the studs, engaging the drive member of breaker assembly with the drive member of the engine.

c. Install four washers, lock washers, and nuts. Turn the nuts evenly until snug so that the

[39] Ser No. 55-4159 and subsequent.

breaker assembly is held squarely against the mounting pad but is still loose enough to be rotated by hand pressure within the range provided by the adjustment slots. Center studs in elongated slots in breaker housing.

d. Connect the leads of a timing light or continuity checker to pins A and B of the electrical connector of the breaker assembly.

e. Set the engine at 30 degrees before-top-center on the compression stroke of the number one cylinder.

f. Insert a 1/4-inch drive handle into the square sockets, cock slightly to hold it in the socket, and pull the drive shaft out to disengage the splines.

g. Holding the drive shaft, turn the cam assembly, by means of the bearing retaining nut, in the direction of rotation of the engine drive member until the continuity checker indicates the points have JUST CLOSED after passing through an open period. Release the drive shaft and be sure it properly engages the cam spline.

h. Insert a 1/4-inch offset drive handle in the socket of the drive shaft. Hold out the backlash in the engine drive gear train with the drive handle and rotate the breaker housing until the continuity checker indicates the points have closed. Torque the four securing nuts evenly to 40–45 pound-inches.

Note

Backlash must be held out in direction opposite to normal rotation of engine drive member.

i. Turn the engine back against rotation and then bring it up slowly to 30 degrees before-top-center position on the compression stroke of the number one cylinder. Hold out the backlash as described above. When the timing position is reached, the contacts should just close as indicated by the continuity checker.

j. If further adjustment proves to be necessary, it should be done by readjustment of the cam shaft or by rotation of the entire synchronizing breaker assembly in the slots.

k. Install the electrical connector on the breaker assembly and safety wire it to the unused flanged securing screw on the connector receptacle.

l. Position the sealing gasket and the breaker cover on the studs. Install a new tachometer flange gasket.

m. Place the tachometer generator over the studs mating the drive member of the tachometer generator with the drive socket of the breaker assembly.

n. Secure the tachometer with plain washers and elastic stop nuts. Torque nuts evenly to 65 pound-inches and safety with wire not less than 0.30 inch in diameter.

5-69G. MAINTENANCE. Maintenance is limited to the replacement of a malfunctioning unit or a timing check, which is accomplished as explained in steps d. thru j. in paragraph 5-69F.

5-70. IGNITION CABLE ASSEMBLY.

5-71. REMOVAL. Remove the ignition cable assembly as follows:

a. Remove the inter-cylinder air deflectors between cylinders No. 1 and 2 and No. 1 and 9.

b. Disconnect all spark plug leads. Cover the lead terminals with suitable protectors. Disconnect the clips that secure the rear spark plug leads to the push rod housings, and unfasten the straps on the cylinder head deflectors.

c. Break the lock wire and loosen the two spanner nuts connecting the ignition cable main conduits to the ignition manifold. Break the lock wire between the spanner nuts or the main ignition conduits to the elbow attaching clamp screws on the magneto. Loosen the nuts with a spanner wrench. Release the clamp screws and withdraw the clamps. Pull the elbows out of the connections in the magnetos. Release the clamps which hold the main conduits to the brackets on the crankcase rear section.

d. Remove the six crankcase front-to-main section attaching screws which secure the ignition cable assembly.

e. Lift the ignition cable assembly from the engine.

5-72. INSTALLATION. Install the ignition cable assembly as follows:

a. Place the ignition cable assembly in position on the crankcase front section, locating the main conduits between cylinders No. 1 and 2 and between cylinders No. 1 and 9. Lay the conduits back along the top of the engine. Install washers between the harness bracket and the crankcase front section attaching screw bosses. Install the six crankcase front-to-rear section attaching screws and torque to 500–550 pound-inches.

b. Attach the main ignition conduits to the magnetos. Locate with the locating pins. Tighten the clamps which hold the leads to the brackets on the crankcase rear section. Tighten the nuts that secure the main conduits to the cable manifold and the elbows. Tighten the clamp screws. Lockwire the nuts and screws.

c. Remove the protectors from the spark plug leads and attach the leads. Attach the clips that secure the rear spark plug leads to the exhaust push rod housing on all cylinders except cylinders No. 6 and 8 (the intake push rod housing on the latter). Fasten the straps on the cylinder head deflectors over the rear spark plug leads.

d. Replace the inter-cylinder air deflectors between cylinders No. 1 and 2 and No. 1 and 9.

5-72A. IGNITION HARNESS CHECK.

5-72B. This check may be accomplished when abnormal operation of the engine indicates that the ignition harness may be at fault. The following procedures will be used when magneto and harness are installed on the engine:

a. The Delco High Voltage Tester, Stock No. 7800-801815, or Electronic Brazing Company Dual Tester, Model 178, Stock No. 7800-801815-8, may be used.

b. Disconnect all leads from the spark plugs and ground each lead to the engine.

c. Connect the ground wire of the ignition tester to either the engine or the air frame.

d. Connect the lead wire from the tester to one lead at a time on the engine, regrounding each lead after it has been tested. If leakage is indicated, the crankshaft should be rotated to determine if the leakage is eliminated with a different crankshaft position. If the leakage stops, it indicates that the leakage was through the distribution finger to the magneto then through the secondary coil to the ground, and does not constitute a lead or harness breakdown.

e. If during the high tension electrical test, two or more leads show leakage, repeat the test on one of the leads showing leakage, with the other lead or leads having leakage, ungrounded from the engine. If ungrounding the other lead or leads eliminates the leakage on the lead being tested, then the leakage is either between the two leads or between corresponding electrodes in the distribution book.

f. If a high voltage test indicates a defective lead, replace the lead as follows:

1. Remove the connector at the spark plug end of the lead and remove the spark plug lead conduit from the ignition cable assembly. Loosen the coupling nut on conduit and slide the conduit toward the rear.
2. Remove the lead from the distributor block.
3. Determine in which direction the lead will pull the easiest; then splice and solder the new lead onto the opposite end of the old lead. Dust the lead with talc or soapstone to prevent friction. Push the new lead through the conduit as the old lead is pulled out.
4. Cut the new lead when it is through the conduit.
5. Remove 1/2 inch of insulation from the distributor block end of the lead, being careful not to cut any of the lead strands. Separate the strands and bend them back along the insulation.
6. Mark a new copper ferrule with the proper number, using a metal stamp; then install the ferrule and secure it with a crimping tool.
7. Place the lead in its proper hole in the distributor block and secure it with the piercing screw. Push the wire through the spark plug lead conduit. Secure the conduit to the manifold.
8. Remove 1/8 inch of insulation from the end of the lead, being careful not to cut any of the lead strands. The insulation must bear firmly against the brass disc inside the spark plug connector.
9. Bend the strands back over the lead opening in a radial pattern. Do not solder the lead.

g. If the distributor block is found defective, it must be replaced.

5-73. MAGNETOS.

5-74. GENERAL. Before removing a magneto from the engine, proceed as follows:

a. Place the fuel mixture control in IDLE CUT-OFF position and the ignition switch in OFF position. Turn off the supply to the fuel pump.

b. Remove the front spark plug from cylinder No. 1 and turn the crankshaft until the piston in cylinder No. 1 is approximately 90 degrees before top center on the compression stroke.

c. Install pivot arm (Special Engine Tool) and

scale (Special Engine Tool) on a piston position indicator. Install the indicator in the front spark plug insert of cylinder No. 1. Turn the cap on the indicator until the slot is parallel with the vertical axis of the cylinder, and the scale with the zero reading at the bottom is at the right of the slot.

d. Push the slide pointer up against the pivot arm at the top of the slot. Turn the crankshaft in the direction of normal rotation until the pivot arm pushes the slide pointer down and then starts to rise in the slot. The point at which the slide pointer remains corresponds with top center for the piston. Set the zero reading on the scale opposite the line of the pointer. The lower of the two lights on the indicator will be on when the pivot arm and slide pointer are in contact.

e. Turn the crankshaft in the direction opposite normal rotation until the pivot arm nears the top of the slot. Then move the slide to the point opposite the 20 reading on the scale, which corresponds with the 20-degrees-before-top-center position for the piston. Tap the crankshaft in the direction of normal rotation until the pivot arm touches the slide pointer and the light goes on. Move the pointer away from the pivot arm to save the battery but do not move the scale or turn the crankshaft.

5-75. CHECKING TIMING OF A GOOD MAGNETO. Check the timing of a magneto installed on the engine as follows:

a. Loosen the lock screw on the clamp securing the breaker box cover to the magneto. Remove the clamp and cover. Remove the ground terminal from the magneto and insulate the ground spring from the grounding pin with a thin piece of clean cardboard or install a ground lead terminal (without a ground wire). Disconnect the primary coil lead of each magneto and reinstall the screw which secured the lead.

b. Connect a lead to each of the jacks on the piston position indicator and clip one of these leads to the primary coil lead attaching screw of the magneto.

Note

To conserve the small battery in the piston position indicator, connect another battery with it. Connect the positive terminal of the supplementary battery to the screw on the scale friction spring; connect the negative terminal to ground.

c. Turn the crankshaft opposite normal rotation a few degrees; the magneto breaker points should close and the timing light should go on. Then tap in the direction of normal rotation until the timing light goes out; the magneto breaker points must open and the timing light go out when the pivot arm reaches the 20 reading on the scale. (Check piston position by pushing the slide pointer up against the pivot arm and noting the position on the scale.) Also, when the breaker points open, the steps on the magneto cam must align within 1/32 inch with the center of the mark on the timing post. Check the alignment with a straight edge.

5-76. ADJUSTING INTERNAL TIMING OF A GOOD MAGNETO. If the magneto cam does not align within 1/32 inch with the timing post, adjust the breaker points as follows:

a. If the check with the straight edge indicates that the breaker points have started to open in advance of the required timing, jar the crankshaft in the direction of normal rotation until alignment is correct. Loosen the two contact bracket attaching screws and shift the contact bracket by means of the eccentric head screw until the timing light on the piston position indicator goes out. Secure the contact bracket with the locking screws and recheck the breaker point action to be certain that the locking operation did not change the contact position.

b. If the check with the straight edge indicates that the breaker cam has rotated beyond the desired point, back up the cam (by turning the crankshaft in the direction opposite to normal rotation) until the breaker cam follower is on the cam dwell preceding the No. 1 lobe (indicated by the red dot). Jar the crankshaft in the direction of normal rotation until the straight edge along the step on the cam aligns with the mark on the timing post. Adjust the contact bracket as described above.

5-77. TIMING A GOOD MAGNETO TO ENGINE. (See figures 5-15 and 5-16.) If the breaker point adjustment of the magneto is correct but the breaker points do not open at 20 degrees before top center as determined by the timing light, adjust the timing of the magneto to the engine as follows:

a. Set the piston at 20 degrees before top center on the compression stroke.

b. Loosen the attaching screws which secure the magneto to the mounting pad. Tap the magneto gently until the timing light on the piston position indicator goes out. Carefully tighten the magneto attaching nuts.

c. Check timing by turning the crankshaft against normal rotation a few degrees, then tapping in direction of normal rotation until the timing light goes out. In some cases, mere tightening of nuts affects timing.

5-78. REMOVAL OF A DEFECTIVE MAGNETO. Remove an unsatisfactory magneto as follows:

a. Remove the ground lead. Remove the rear half of the external oil supply tube, if necessary.

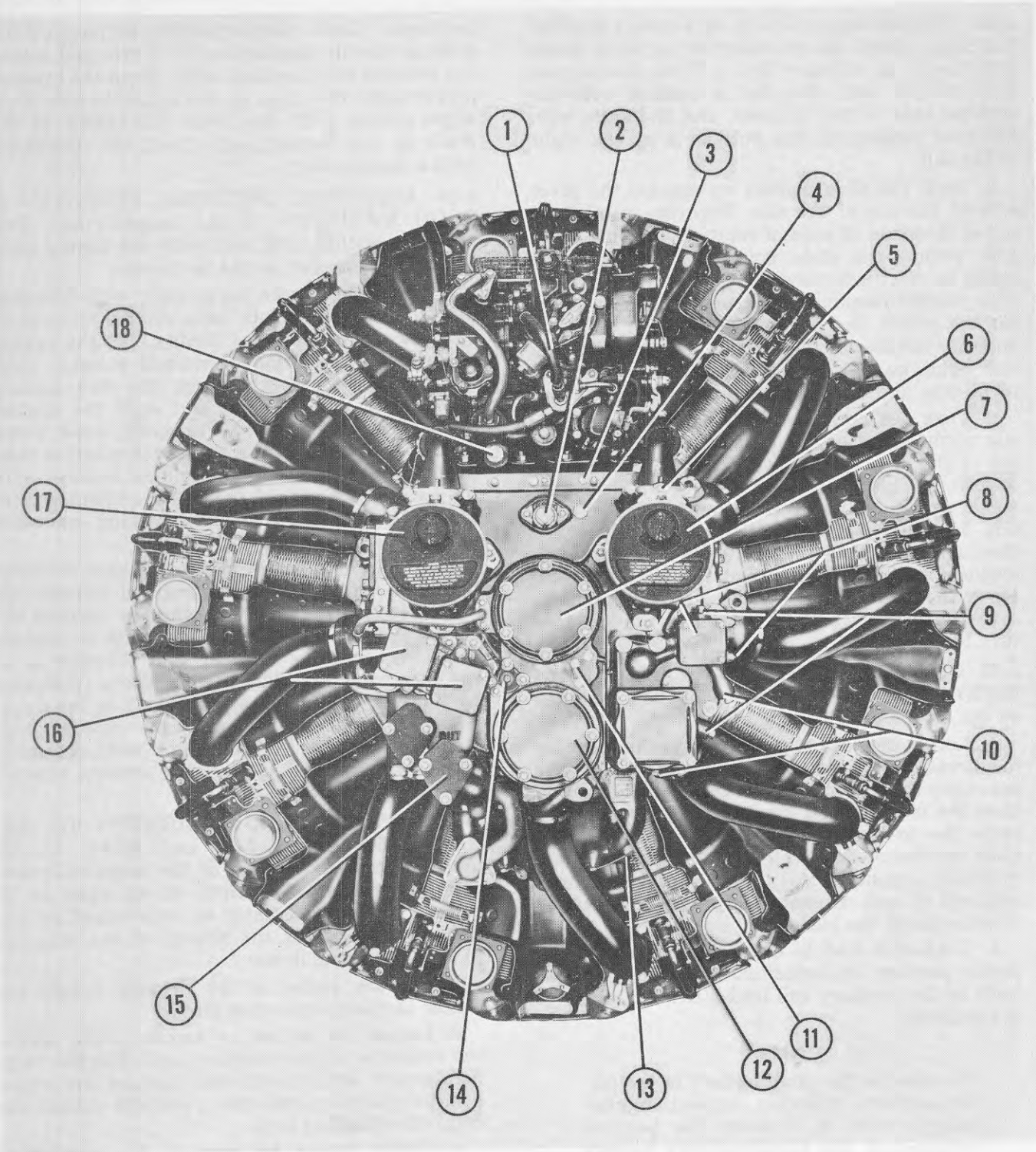

1 Priming System
2 Crankcase Vent to Oil Tank
3 Manifold Pressure Gage Connection
4 Oil Pressure Gage Connection
5 Ignition Switch and Booster Wire Connection
6 Right Magneto
7 Starter Pad
8 Accessory Drive Pads
9 Accessory Drive Vents
10 Accessory Drive Drains
11 Supercharger Clutch Pressure Gage Connections
12 Generator Drive Pad
13 Oil Return for Accessory
14 Supercharger Clutch Control Valve
15 Oil Pump Inlet and Outlet Connections
16 Tachometer Drive Pads
17 Left Magneto
18 Temperature Bulb Connections

Figure 5-12. Rear View—R-1820-103 Engine

b. Break the lock wire that secures the spanner nut on the main ignition conduit to the plug-in elbow attaching clamp screw. Loosen the nut with a spanner wrench. Release the clamp screws and withdraw the clamp. Pull the elbow out of the connection in the magneto.

c. Remove the attaching nuts and washers securing the magneto. Remove the magneto, making sure to pull it away from the engine until the drive shaft is clear.

5-79. CHECKING INTERNAL TIMING OF A NEW MAGNETO. A new magneto is internally timed as follows:

a. Loosen the lock screw on the clamp securing the breaker box cover to the magneto. Remove the clamp and cover.

b. Turn the magneto drive shaft in the direction of normal rotation, as indicated by the arrow on the breaker cam, until the No. 1 lobe, indicated by the red dot, is about to open the breaker points. In this position, the step on the cam must align within 1/32 inch with the mark on the timing post. Check the alignment with a straight edge. If alignment is incorrect, use another magneto.

c. Do not replace the breaker box cover until after timing the magneto to the engine.

5-80. TIMING A NEW MAGNETO TO THE ENGINE. After verifying internal timing, place the magneto on the mounting studs. Observe the breaker point action while rotating the magneto from the extreme clockwise to the extreme counter-clockwise positions. In the former, the breaker points should be closed; in the latter, the breaker points should be open. If the breaker points function properly, attach the magneto loosely to the studs in the extreme clockwise position; if the breaker points do not function properly, remove the magneto from the engine and make the following adjustments.

a. Turn the magneto drive shaft in the direction of normal rotation until the cam has made one complete revolution and the step on the breaker cam again lines up with the mark on the time post. The relative positions of the magneto drive shaft coupling and the breaker cam are now slightly altered. Place the magneto on the engine and check the breaker point action.

b. If the points still do not function properly, repeat step a. three more times in an effort to obtain correct action.

c. If the required results are still not obtained, remove the magneto from the engine. Remove the cotter pin from the magneto drive shaft coupling and remove the coupling attaching nut and coupling. Reinstall the coupling one spline in advance (clockwise) of its former position. Reinstall the coupling nut finger-tight. Again place the magneto on the engine and check the breaker point action.

d. Repeat step c. until the breaker points are closed when the magneto is in the extreme clockwise position and open when the magneto is in the counter-clockwise position. When operation is correct, tighten the coupling nut and lock it with a cotter pin. Mount the magneto on the studs in the extreme clockwise position, attaching it loosely.

e. Insulate the ground spring from the grounding pin with a thin piece of clean cardboard or install a ground lead terminal (without a ground wire). Disconnect the primary coil lead of each magneto and reinstall the screw which secured the lead.

f. Clip a lead from one of the jacks on the piston position indicator to the primary coil lead attaching screw of the magneto. Since the magneto breaker points are closed, the indicator light connected with the jack will be on.

g. With the palm of the hand, jar the magneto case to cause it to rotate counter-clockwise until the instant the light to which it is connected goes out, indicating that the breaker points have started to open. Tighten the magneto attaching nuts. Replace the rear half of the external oil supply tube, if necessary.

5-81. SYNCHRONIZING MAGNETOS. (See figures 5-15 and 5-16.) Synchronize the two magnetos as follows:

a. Check the synchronization of the magnetos by turning the crankshaft opposite normal rotation a few degrees, then tapping in the direction of normal rotation. The timing lights should go out simultaneously when the pivot arm reaches the 20 reading on the scale. In some cases, mere tightening of the magneto attaching nuts affects the timing. Adjust the magnetos to each other until the lights go out simultaneously at the point when the pivot arm is nearest the 20 reading on the scale.

b. Disconnect the timing light wires from the magnetos and reconnect the primary coil leads. Remove cardboard insulation if it has been used. Replace the breaker box covers and lockwire. Attach the main ignition conduits to the magnetos, loosening the elbow attaching nuts if necessary. Locate with the locating pins. Clamp the elbows and retighten the nuts. Lockwire clamp bolts and elbow nuts.

c. Remove the piston position indicator from cylinder No. 1 and replace the spark plug.

d. Replace the magneto ground wires.

5-82. MAGNETO RPM CHECK. First, check for proper connection of ground wires by disengaging the rotors, idling the engine on BOTH magnetos at approximately 1000 rpm, turning the ignition switch OFF momentarily to see if the

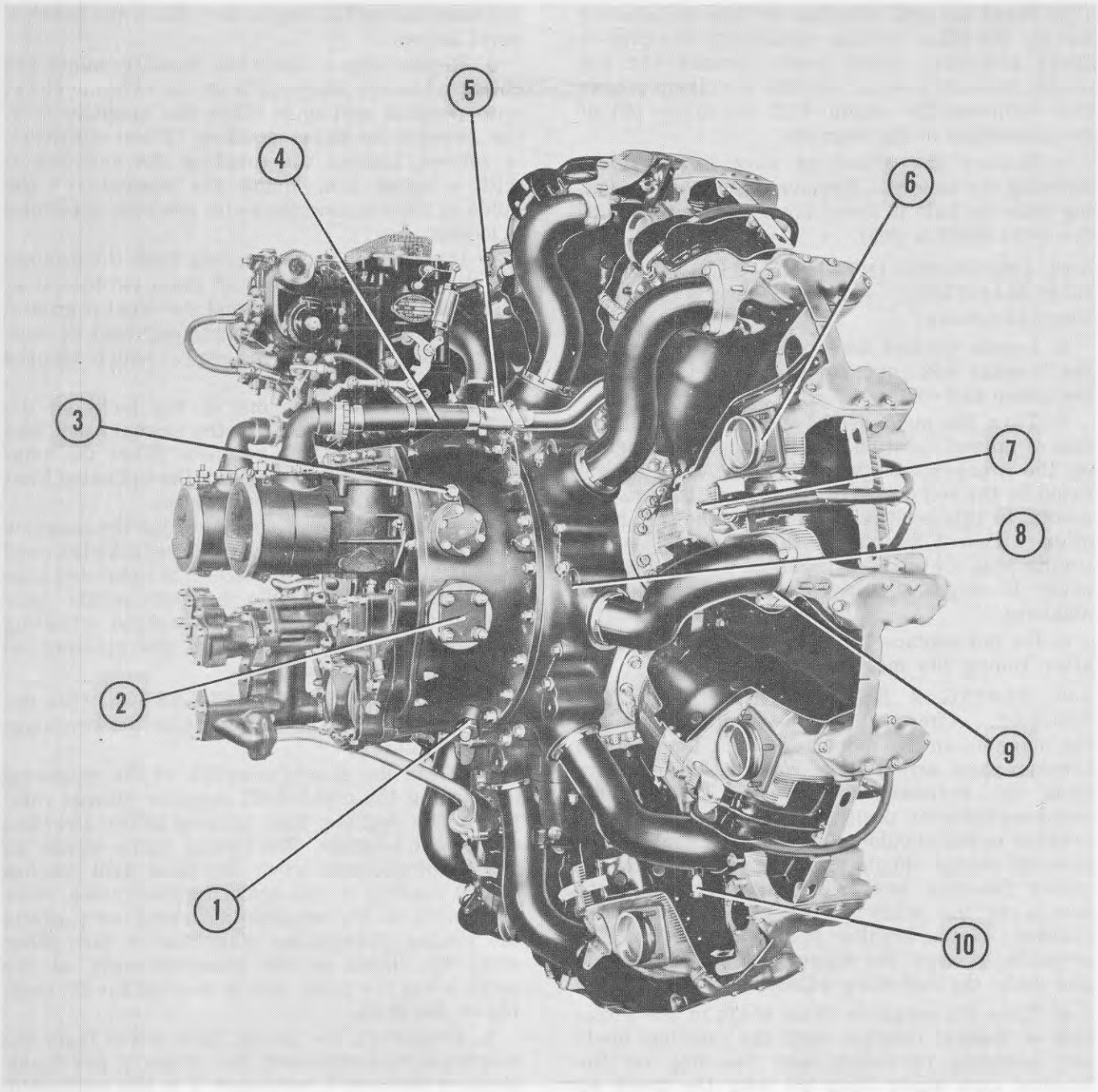

1 Supercharger Drain Valve
2 Fuel Pump Drive Pad
3 Oil Return for Accessory
4 Right Ignition Conduit
5 Crankcase Breather
6 Cylinder Exhaust Port
7 Thermocouple Connection
8 Engine Mounting Bolt Hole
9 Cylinder Intake Port
10 Intake Pipe Drain

Figure 5-13. Three-Quarter Right Rear View—R-1820-103 Engine

engine stops firing. If it stops, as it should, return the ignition switch to BOTH. Re-engage the rotors and open the throttle to obtain 2400 rpm or 30 inches Hg, whichever occurs first. Make the following check.

a. Note the rpm as the engine operates with the ignition switch in the BOTH position.

b. Place the ignition switch in the L position and observe the rpm.

c. Return the switch to the BOTH position and stabilize speed.

d. Place the ignition switch in the R position and observe the rpm.

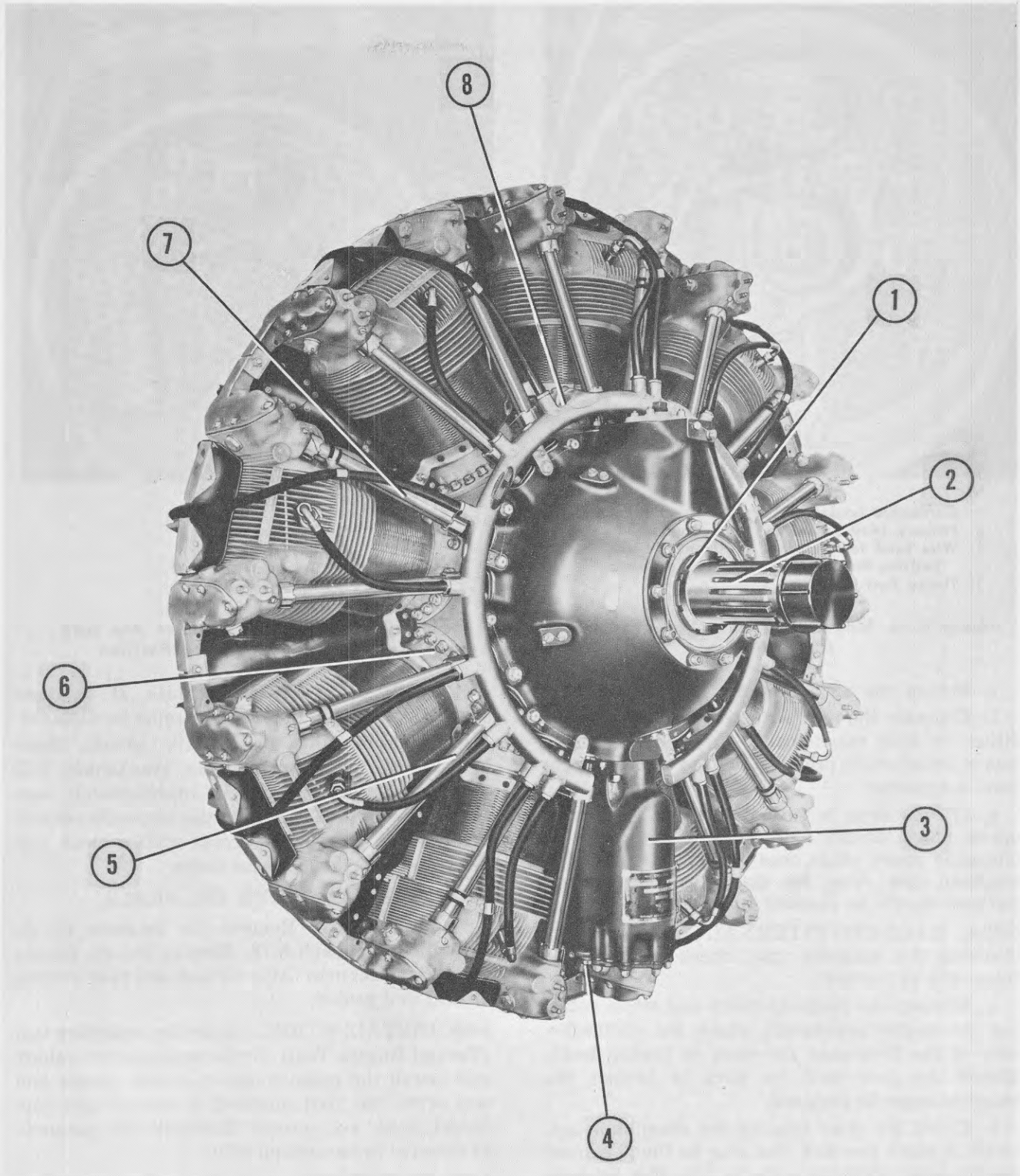

1 Propeller Shaft Thrust Bearing Nut
2 Propeller Shaft
3 Front Oil Sump
4 Magnetic Oil Drain Plug
5 Intake Push Rod Housing
6 Cylinder Attaching Screw
7 Exhaust Push Rod Housing
8 Ignition Conduit Coupling

Figure 5-14. Three-Quarter Right Front View—R-1820-103 Engine

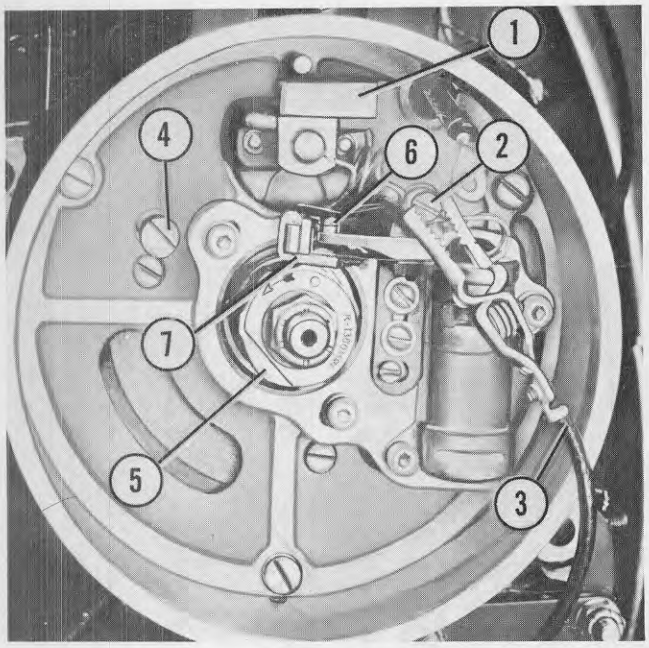

1 Cardboard Insulation
2 Primary Lead Screw
3 Wire Lead for Piston Position Indicator
4 Timing Post
5 Step on the Cam Breaker
6 Breaker Points
7 Cam Follower

Figure 5-15. Magneto Breaker Box Prepared for Timing

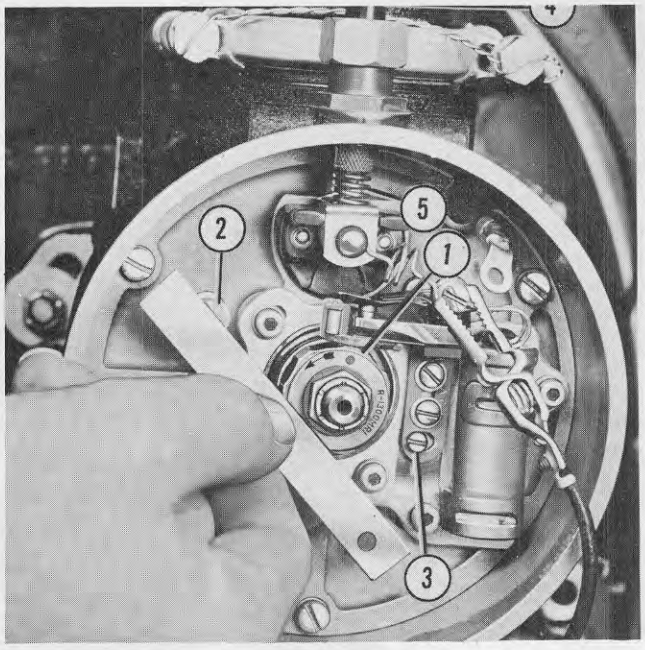

1 No. 1 Cam Lobe
2 Timing Post
3 Eccentric Screw
4 Terminal Assembly
5 Ground Spring

Figure 5-16. Magneto Breaker Box with Cam in Correct Timing Position

e. Return the switch to the BOTH position.

f. Compare the rpm observed for operation on either or both magnetos. A drop of 75 rpm or less is satisfactory provided that no engine roughness is apparent.

g. If rpm drop is excessive, check for fouled spark plugs. Install new plugs if necessary. If changing spark plugs does not correct excessive magneto rpm drop, the magnetos and ignition harness should be checked for malfunction.

5-82A. MAGNETO INTERNAL CHECK. After checking the magneto rpm, check the magneto internally as follows:

a. Remove the magneto cover and while rotating the engine crankshaft, check the circumference of the fiber gear for worn or broken teeth. Should the gear teeth be worn or broken, the magneto must be replaced.

b. Check the gear housing for aluminum particles. A black powdery film may be found around the housing. Rubbing some of this film between the fingers will determine the presence of aluminum particles. If such particles are found, check the inner bearing plate for binding and the bearing insert for looseness. Aluminum particles in the gear housing necessitates replacement of the magneto.

c. Check the gears for backlash. If backlash exceeds 0.012 inch, the magneto must be replaced.

d. Lubricate the gears with grease, Spec MIL-L-3545, while turning the crankshaft. Fill the space between gear teeth approximately one-fourth full of grease around the circumference of the gear. Wipe off any excess with a clean dry cloth. Replace the magneto cover.

5-83. MAGNETO DRIVE OIL SEALS.

5-84. REMOVAL. Remove the magneto as directed in paragraph 5-78. Remove the six screws from each magneto drive oil seal and take out the oil seal and gasket.

5-85. INSTALLATION. Insert the installing tool (Special Engine Tool), in the magneto drive shaft and install the magneto drive oil seal gasket and seal with the part marked T toward the top. Attach with six screws. Reinstall the magneto as directed in paragraph 5-80.

5-86. INDUCTION.

5-87. GENERAL. For the purposes of this handbook, induction is separated from carburetion. The following paragraphs cover maintenance procedures involved in servicing the supercharger, the valve system, and intake pipes.

5-88. SUPERCHARGER DRAIN VALVE.

5-89. REMOVAL. The supercharger drain valve, located on the lower right side of the accessory case, is removed as follows:

a. Place an open end wrench on the drain valve housing and unscrew the valve housing. Remove the piston and disc assembly which is loose in body. Remove packing ring from body.

b. Using a pair of needle nose pliers, remove the circlet securing the valve retainer and spring in the valve housing.

c. Unscrew the valve body from the supercharger rear housing. Remove the washer.

d. Remove the screw from the side of the body and shake out the two check balls.

e. Pull the drain tube from the body and remove the seal rings.

Note

If the valve body comes out with the housing, hold the body, by the flats, in a copper-jawed vise and unscrew the housing from the body.

5-90. INSTALLATION. Install the supercharger drain valve as follows:

a. Assemble the spring and retainer in the drain valve housing, insuring that the lugs on the retainer face away from the spring. Install the circlet with needle nose pliers.

b. Insert one of the check balls through the hole in the side of the valve body. Tip the body to seat the ball and install the other ball. Install the retaining screw. To insure that the balls are not jammed, shake the assembly. If the balls do not rattle, adjust the retaining screw.

c. Lubricate a new packing ring with anti-seize compound Spec JAN-A-669 and install it on the flange below the threads of the valve body. Install the piston and disc assembly by inserting the large diameter end into the hole in the valve body. Screw the valve housing to the valve body. Place the flats on the body in a copper-jawed vise while tightening the housing.

d. Insert the small end of the tube into the valve body using a fiber mallet to seat the tube. Place two rubber rings in the groove on the end of the valve body.

e. Install a washer on the flange of the valve body and screw the entire assembly into the bushing in the rear housing. Tighten with a wrench on the hex of the valve housing.

5-90A. VALVE SYSTEM INSPECTION.

a. The engine valve mechanism will be checked and adjusted whenever rough engine operation,

backfiring, loss of compression, hard starting, or other conditions are experienced and can be attributed to the improper operation or clearance of the valves.

b. At the time of valve adjustment, the valve operating mechanism, such as rocker arms, rocker arm bearings, and valve springs, will be checked for evidence of cracks, breaks, chipping, and indications of excessive clearance. The rocker arms will also be checked for proper lubrication. In the event the rocker box is excessively dry, the cause of this inadequate lubrication must be corrected immediately. This may require the removal of the push-rod housing, push-rod, and possibly removal of the tappet, to determine the channel which is clogged or partially clogged. If it is necessary to pull the tappet, it must be thoroughly lubricated before it is reinstalled. After a plugged condition of the valve mechanism has been corrected, it must be further checked by running the engine and checking the rocker box again for proper lubrication.

c. To eliminate oil leakage at the rocker box parting surface, all rocker box covers will be checked for flatness by using a surface plate or a piece of plate glass and a 0.0015-inch feeler gage. Cast rocker box covers which are warped will be resurfaced by lapping the rocker box cover on fine emery cloth laid on a flat surface or a piece of plate glass until all indication of warpage is removed. Rocker box covers which are stampings, if warped, will be replaced.

d. To eliminate excessive maintenance time and assure proper sealing of rocker box covers, the engine will be started and run for approximately five minutes at a speed not to exceed 1500 rpm, after which all rocker box covers will be checked for leaks.

5-91. ROCKER BOX COVERS.

5-92. REMOVAL. Loosen the nut which attaches the inter-cylinder air deflector at the rocker box. Remove the cover attaching nuts and washers. Remove the cover and gasket.

Note

The rocker boxes contain oil. Make provision for catching this oil before removing the cover.

5-93. INSTALLATION. Before installing a rocker cover, lubricate the valve mechanism with engine oil, Spec MIL-L-6082, grade 1100. Install a clean and dry rocker box cover gasket. Install the cover over the gasket, slipping it into the deflector grommet, and secure with six washers and nuts. Torque the nuts evenly, torquing first two inside nuts that are diagonally opposite each other, then the remaining inside nuts, and last, the end nuts. Tighten the deflector attaching nut.

5-94. ROCKER ARMS, PUSH RODS, PUSH ROD HOUSINGS, AND VALVE TAPPETS.

5-95. REMOVAL. The rocker arms, push rods, push rod housings, and valve tappets are removed as follows:

a. Remove the rocker box cover.

b. Turn the crankshaft to relieve any pressure exerted by the push rod on the rocker arm.

c. Loosen the valve clearance adjusting screw lock screw and turn the adjusting screw out as far as it will go.

d. Extract the cotter pin and unscrew the rocker arm hub bolt nut using two wrenches, one on the nut and one on the bolt head. Remove the nut, washer and packing ring.

e. Extract the bolt. Remove the remaining washer and packing ring.

f. Remove the rocker arm assembly and take the push rod out of the housing.

CAUTION

When the rocker arm and push rod of a lower cylinder are removed, the push rod socket and spring may fall out. Make certain that they are reinstalled when the push rod is replaced.

g. Check the push rod for straightness by placing the rod between two V-blocks mounted on a surface plate. The rod should be placed so that the ball ends of the rod extend beyond the blocks. Measure the rod for bend along its full length using a dial indicator. Maximum bend should not exceed 0.020 inch.

h. Release the ignition lead from the clamp on the push rod housing if necessary. Break the lock wire and loosen the push rod housing inner connection nut; break the lock wire and loosen the push rod housing until it clears the valve.

i. Remove the valve tappet guide adapter nuts. Remove the washers.

j. Slide the valve tappet guide adapter along the push rod housing until it clears the valve tappet ball socket and remove the housing, adapter, and connection nuts together. Remove the ball socket and spring. Take the oil seal ring from each push rod housing outer connection and the washers and packing from each inner connection. Remove the adapter gasket.

k. Using an impact puller, remove the valve tappet guide from the crankcase. Remove the guide gasket.

l. Remove the tappet retaining circlet. Withdraw the tappet. Slip the pin from the roller and remove the bushing from the roller.

5-96. INSTALLATION. Install the rocker arms, push rods, push rod housings, and valve tappets as follows:

a. Lubricate the valve tappet roller bushing, roller and pin. Install the bushing in the roller and insert the roller between the forks on the tappet. Install the roller pin through the tappet and roller. Insert the tappet assembly in the guide with the roller at the opposite end from the flange. Put the tappet circlet on the tapered end of the installing tool (Special Engine Tool). Hold the tappet and guide assembly vertically on a bench with roller down and insert the cylindrical end of the tool in the tappet. Press the collar of the tool down to push the circlet into the retaining groove of the tappet.

b. Install a new gasket, and install the tappet and guide assembly over the studs on the crankcase front section.

c. Coat the valve tappet spring and socket with lubricant and install the spring and socket.

d. Locate a new valve tappet adapter gasket over the valve tappet guide.

e. Apply a little oil to the push rod housing oil seat ring and install it on the push rod housing with the chamfered side of the ring bearing against the flare at the top of the housing. Coat the threads of the push rod housing connection nuts with anti-seize compound, Spec JAN-A-669. Slide the upper nut and then the lower nut onto the housing. Install the straight section of the pilot of the installing tool (Special Engine Tool) into the lower end of the push rod housing so that the shoulder on the pilot butts against the end of the housing. Apply a little anti-seize compound, Spec JAN-A-669, all over the two asbestos-rubber washers and to the ID of the packing ring. Slip an asbestos-rubber washer, the packing ring and the other asbestos-rubber on the tapered section of the pilot. Slip the end of the installing tool having the shoulder on the inside over the tapered pilot and push the washers and ring off the pilot and onto the housing. Locate the push rod housing thus assembled over the valve tappet socket and spring. Start the connection nuts.

f. Install the valve tappet adapter washers and nuts.

g. Torque the push rod housing connection outer nut to 400–450 pound-inches. Torque the push rod housing connection inner nut to 100–125 pound-inches. Lockwire the inner connection nuts together. Lockwire the outer connection nuts to the screw provided in the cylinder.

h. Lubricate the ball ends of the push rod and install it in the push rod housing. Press the rod against the valve tappet socket several times to make sure that the socket is functioning properly.

i. Install a spherical washer over the rocker arm hub bolt with the flat side toward the head of the bolt. Install a packing ring after the washer.

j. Apply a small quantity of lubricant to the rocker arm bearing and roller. Install the rocker arm with the adjusting screw above the push rod. Insert the rocker arm hub bolt with the head toward the center of the cylinder. Secure the rocker arm hub bolt with a packing ring, spherical washer and nut. Tighten the nut with a socket wrench and a torque wrench to 300–375 pound-inches. Lock with a cotter pin.

k. Set the valve clearances.

5-97. VALVES.

5-98. VALVE CLEARANCE ADJUSTMENT.

a. Remove all rocker box covers.

b. Remove one spark plug from each cylinder to reduce the load when rotating the crankshaft.

c. Rotate crankshaft in the direction of normal rotation until the piston in No. 1 cylinder is approximately at top-dead-center on the compression stroke. This puts No. 1 cylinder in position for valve adjusting. Check this position by pressing against the adjusting screw in the rocker arm. If the piston is at top-center on its compression stroke, both valve tappet rollers will be located between the lobes of the cam, and the rocker arm rollers can be lifted from the valve stem tip. The spring pressure under the valve tappet ball socket can also be felt.

d. Adjust both intake and exhaust valves to 0.013 ±0.003 inch.

Note

When checking valve clearance on engines which use rocker arm rollers, the feeler gage should be moved in line with the roller pin and sufficient pressure should be applied on the push rod end of the rocker arm to override the spring tension in valve tappet.

e. Rotate the crankshaft in direction of normal rotation until the next cylinder in firing order is on top-dead-center of the compression stroke. Adjust these valves in the same manner as cylinder No. 1, and continue adjusting valves according to the firing order of the engine.

f. Conduct a second valve check and readjust as necessary any valves that are not within the allowable limits of 0.013 ±0.003 inch.

CAUTION

If the zero reference mark on the top of the adjustment screw is closer than 3/32 inch to the nearest edge of the slot in the rocker arm, the adjustment screw

To be provided at a later date

Figure 5-16A. Aircraft Engine Cylinder Compression Tester, Type S-1

will be turned in the direction of increase or decrease until the reference zero mark is at least 3/32 inch from the nearest edge of the slot in the rocker arm. In no case will the valve clearance be increased or decreased to exceed the allowable valve clearance.

g. Conduct a third valve clearance check to insure that all valves are within the allowable limits, 0.013 $\pm$0.003 inch. If adjustment is necessary, this step will be repeated.

h. After the third and final check, tighten the lock screw until a minimum torque of 350 pound-inches, applied to the adjusting screw with a screwdriver and a torque wrench, will not move the screw.

5-98A. COMPRESSION TESTING CYLINDERS.

a. A cylinder compression check will be accomplished at the inspection period nearest to each 200 hours of operation or at any time faulty compression is suspected. Cylinders with com-

To be provided at a later date

Figure 5-16B. Comparison Check of Gage Readings

To be provided at a later date

Figure 5-16C. Check of Cylinder Gage Pressure with Shut-Off Valve Open

To be provided at a later date

Figure 5-16D. Check of Restriction in Hose to Cylinder

pression falling below a minimum pressure of 10 psi will be replaced.

b. Aircraft engine cylinder compression tester, Type S-1, Part No. 47R11992, figure 5-16A, will be used to accomplish the compression check.

c. To ensure the most effective test of compression and, at the same time, eliminate the possibility of removing cylinders which are not defective, the compression tester will be checked prior to accomplishing a compression check on the engine. Testers which do not meet the requirements will be returned to the overhaul depot for repair.

d. Check the compression tester by connecting an air supply of 100–150 psi to the air inlet connection. Adjust the regulated pressure to obtain 80 psi. With the shut-off valve closed and the regulated pressure at 80 psi, the cylinder pressure gage must indicate 80 $\pm$2 psi, figure 5-16B. Open shut-off valve and the cylinder pressure gage reading must drop to 15–20 psi, figure 5-16C. Close shut-off valve and connect the spark plug bushing adapter to the outlet line from the tester.

The cylinder pressure gage reading must drop to five psi or less, while maintaining 80 psi regulated air pressure, figure 5-16D.

e. After assuring that the tester is operating satisfactorily, run engine in order that all piston rings, cylinder walls, and operating parts will be uniformly lubricated.

f. Remove one spark plug from each cylinder and install spark plug connector and seal ring in the number one cylinder. Tighten connector sufficiently to ensure a seal.

g. Connect the compression tester assembly to the compressed air supply. With shut-off valve closed, adjust the main line pressure to 80 psi on the regulated pressure gage.

h. Open the shut-off valve and attach the air hose quick-connect fitting to the spark plug connector. This will establish a pressure of 15–20 psi in the cylinder when both intake and exhaust valves are closed, provided the cylinder will hold 15–20 psi air pressure.

i. Turn the engine over in the direction of rotation by hand until the piston in number one cylinder is coming up on compression stroke against the 15–20 psi and continue turning slowly until piston reaches top-center. Reaching top-center is indicated by a flat spot or sudden decrease in force required to turn the crankshaft. If the engine is rotated too far, back up at least one-half revolution and start over again to eliminate the effect of backlash in the valve operating mechanism, and to keep piston rings seated on the lower ring lands.

j. Close the shut-off valve. Check the regulated pressure and adjust, if necessary, to 80 psi.

CAUTION

Care must be exercised in closing the shut-off valve, because if the piston is not on top-center; there will be sufficient air pressure build-up in the cylinder to rotate the crankshaft approximately 1/4 turn.

k. With regulated pressure adjusted to 80 psi, record reading on the cylinder pressure gage. When all cylinders have been checked and readings recorded, return to the cylinder or cylinders having low compression readings and recheck.

l. When low compression is obtained on cylinder, the engine should be started and run-up to magneto check rpm and operated for a minimum of three minutes. As soon as the engine is shut down, the cylinder or cylinders having low compression will be rechecked.

m. If this does not correct the difficulty, the rocker box cover will be removed and the valve clearance checked to determine if the low compression is due to negative valve clearance.

n. If not caused by negative valve clearance, stake valve by placing a fiber drift on the rocker arm immediately over the valve stem and tap the drift several times with a one to two pound hammer. Then rotate crankshaft with the starter and recheck the compression.

CAUTION

When staking valves, rotate crankshaft so that piston will not be on top-center to prevent the possibility of the valve sriking the head of the piston.

o. AFTO Form 34 will be used for recording compression reading on each cylinder. Initiated Form, with compression values obtained, will be attached to AF DD Form 289 and kept with the engine.

5-98B. CYLINDER REPLACEMENT.

a. The maximum number of cylinders that can be replaced at one time to correct defects, rather than remove the engine for overhaul, are nine for engines which have operated less than one-half maximum allowable life, five up to three-fourths engine life, and two on engines from three-fourths engine life to maximum life. When the man-hours required to replace cylinders exceeds the man-hours required to make a complete engine or power pack change, the engine or power pack may be removed from the aircraft and cylinder change accomplished at base shops level.

b. If spare cylinders are not available, serviceable cylinders may be removed from repairable

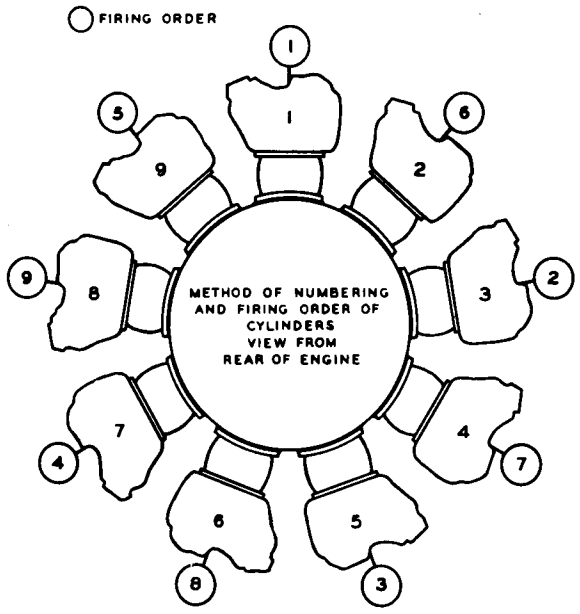

Figure 5-17. Cylinder Numbering and Firing Order

engines having the least operating time and will be used to preclude AOCP. Repairable cylinders will be installed on all repairable engines and properly tagged with a repairable parts tag prior to shipment of engine to depot.

5-99. INTAKE PIPES.

5-100. REMOVAL. Remove the intake pipes as follows:

a. Loosen the intake pipe packing nut handle. Remove the screws and washers securing the intake pipe flange at the cylinder head. Back the packing nut onto the pipe and remove the pipe with nut, flange and flange packing.

b. Remove the flange gasket. Remove the packing ring and packing from the port in the supercharger front housing.

c. Install suitable covers over the cylinder intake port and over the front housing port.

Note

The flanges on intake pipes for cylinders No. 4, 5 and 6 are integral with the pipes. The others are loose.

5-101. INSTALLATION. Install the intake pipes as follows:

a. Remove the covers from the ports in the supercharger front housing and cylinder.

b. Install a new intake pipe packing and a ring (convex side outward) in the port of the supercharger front housing and screw in the packing nut. Do not tighten the nut.

c. Install a new packing over the bead on the cylinder end of the intake pipe. Slide an attaching flange over the pipe, if necessary, and push the flange to the cylinder end of the pipe.

TEXT DELETED

d. Insert the pipe into the supercharger front housing. Adjust the flange at the cylinder head and secure it with the three attaching washers and screws. Torque the screws. Tighten the packing nuts in the supercharger front housing.

5-102. CYLINDERS.

5-103. GENERAL. The following maintenance procedures involving installation and removal of cylinder assemblies may be completed as field service operations.

CAUTION

If cylinder No. 1 is to be removed, keep the master rod centered to prevent loss of rings on the other pistons.

5-104. CYLINDER AIR DEFLECTORS.

5-105. REMOVAL. Remove the cylinder air deflectors as follows:

a. Head deflector. Disconnect the ignition lead from the rear spark plug. Unfasten the strap on the deflector, pull the lead straight out of the plug, and cover the terminal with a suitable protector. Remove the screws and washers securing the cylinder head deflector to the rocker boxes, inserting the screwdriver through the slots in the braces. Remove the nut, bolt and washer securing the head deflector to the cylinder head vertical fins. Take off the deflector.

b. Inter-cylinder deflector. Remove the adjacent intake pipe. Unhook the clamp spring that fastens the inter-cylinder deflectors at the rear of the cylinder. Take the attaching nut and washer from the lower clamp assembly and remove the clamp. Unscrew the nut securing the upper clamp plate and grommet at the rocker box. Remove the deflector.

Note

The inter-cylinder deflector between cylinders No. 5 and 6 is attached to the sump by two screws and washers instead of being clamped at the lower end. Break the lock wire and remove the screws and washers in order to remove the deflector.

5-106. INSTALLATION. Install the cylinder air deflectors as follows:

a. Head deflector. Place the deflector on the cylinder head and attach with two screws and washers to the intake and exhaust rocker boxes. Tighten the screws by inserting the screwdriver

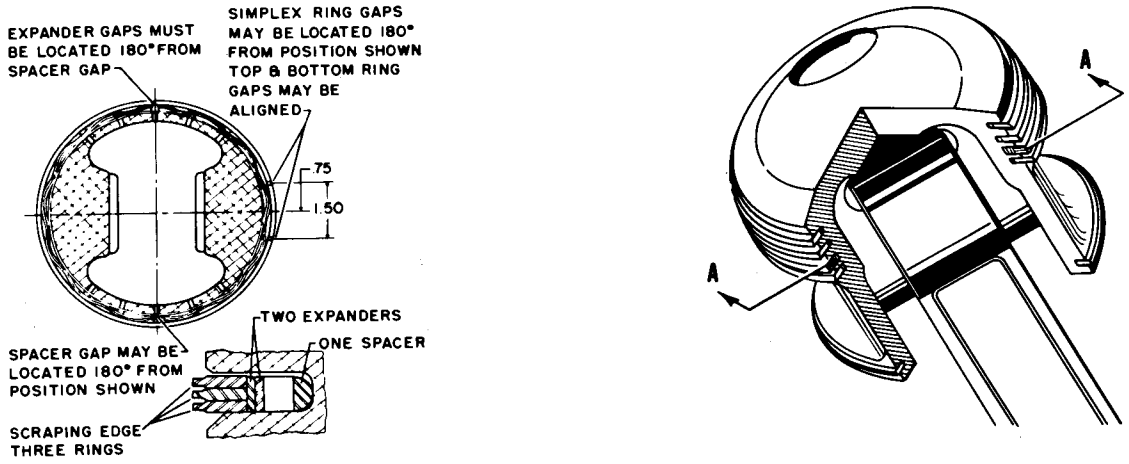

Figure 5-18. Piston Ring Arrangement

through the slots in the deflector. Attach the deflector to the cylinder head fins with a long bolt which passes through the deflector and fins. Install a washer under the head of the bolt and secure with a nut. Remove the protector from the ignition lead and reinstall the lead to the rear spark plug. Fasten the strap on the deflector over the lead.

b. Inter-cylinder deflector. Be certain that the deflector to be installed is the correct one for the location. Place a grommet between the rocker box cover extensions. Position the deflector between the cylinders. Secure the deflector at the rocker box with a plate, turned flange outward, and a nut. Secure the deflector at the crankcase with a wing-shaped clamp and a nut. (The long bolt is inserted from the rear and secured by a washer and threaded spacer.) Replace the intake pipe.

Note

Attach the inter-cylinder deflector between cylinders No. 5 and 6 to the sump with two screws and washers.

5-107. CYLINDERS AND PISTONS.

Note

Cylinders No. 4, 5, 6 and 7 may be removed with the engine installed. Remove the engine for any others that are to be removed.

5-108. REMOVAL. Remove a cylinder and piston as follows:

a. Turn the crankshaft until the piston of the cylinder to be removed is at top center on the compression stroke.

b. Remove as much as necessary of the exhaust manifold to permit withdrawal of the exhaust pipe. Remove the pipe from the cylinder and cover the opening in the cylinder.

c. Remove the ignition leads from both spark plugs and install a suitable terminal protector on the leads.

d. Remove the inter-cylinder air deflectors from each side of the cylinder; remove the head deflector.

e. Remove the rocker box covers.

f. Turn the crankshaft to relieve any pressure exerted by the push rod on the rocker arm.

g. Loosen the valve clearance adjusting screw lock screw and turn the adjusting screw out as far as it will go.

h. Extract the cotter pin and unscrew the rocker arm hub bolt using two wrenches, one on the nut and one on the bolt head. Remove the nut, washer and packing ring.

i. Extract the bolt. Remove the remaining washer and packing ring.

j. Remove the rocker arm assembly and take the push rod out of the housing.

k. Back the push rod housing outer connection nut off its threads. Loosen the inner connection nut.

Note

If cylinder No. 1, 2, or 9 is to be removed, break the lock wire and loosen the main ignition conduit nut at the manifold. Loosen the manifold mounting lugs from the attaching bracket at the crankcase front section and pull the cable assembly out of the way, if necessary. If cylinder No. 5 or 6 is to be removed, first remove the front sump.

l. Break the lock wire between the cylinder hold-down screws. Remove lock wire, screws and washers. Pull cylinder straight from the engine.

CAUTION

When removing a lower cylinder, leave two cap screws 180 degrees apart to anchor the cylinder until support is provided. When removing a side cylinder, support the piston to prevent it from striking a lower cylinder.

m. Remove the piston pin and plug assembly. Remove the piston. If the pin is difficult to remove, first remove the piston pin plug by tapping it with a fiber drift passing through the piston pin bore. Insert the toggle end of puller (Special Engine Tool) into the pin from front to rear. Tip the toggle and install the plug of the tool assembly so the chamfered end fits against the piston pin. Install the washer with the plain side toward the plug and lock with the toggle. Support the piston and turn the handle of the tool to pull the pin forward, holding the bolt, if necessary by placing a wrench on the flat. If cylinder No. 1 has been removed, install a protector over the opening in the crankcase to prevent the exposed rod from striking the crankcase; if any other than cylinder No. 1 has been removed, install a protector over articulated rod.

5-109. REPAIRS. The following repairs may be made to the cylinder assemblies:

a. Remove cracked portions of cylinder head fins as follows. Place drill jig (Special Engine Tool) on the damaged fin so that the drill will be as nearly perpendicular to the cylinder head as practical and will meet the end of the crack in the fin. Using a 3/16 inch diameter drill, drill down through the fin to the crack. Remove the damaged fin section. Remove all sharp edges. In determining the amount of material which may be removed from a cylinder head, consider the cylinder head as being divided into quadrants with one line through the vertical fin from the front to rear of the cylinder and the other through the cylinder head deflector bosses from side to side across the head. Remove only up to seven inches of vertical fin and nine inches of horizontal fin from each quadrant. Measure along periphery of fin; do not include fin ends.

b. It is permissible to blend out a maximum of five dents at the base or minute cracks on the circumferential edge of cylinder barrel skirts. These dents should not exceed a longitudinal depth of 0.125 (1/8) inch and a width or span of 0.250 (1/4) inch. No two adjacent dents should be closer than 0.50 (1/2) inch and no straightening is permissible on a bent cylinder barrel skirt.

c. Clean the threads of spark plug inserts with a tool made by milling four slots in a spark plug that has good threads and removing any burrs. Run this improvised tap all the way into the spark plug insert without lubricant.

d. If the spark plug insert has been distorted or if the threads have been damaged, true the threads with a tap. Use heavy grease generously to trap metal particles.

e. Remove and replace damaged head thermocouple adapters.

5-110. INSTALLATION. Install the pistons and cylinders as follows:

a. Check piston ring installation (figure 5-18). Each piston has five ring grooves referred to by numbers 1 through 5 starting at the top of the piston. Rings for grooves 1 and 2 are wedge shaped; 3, 4, and 5 are rectangular. The rings in grooves 1 and 2 should be installed with the sides marked "Top" facing up. The gaps should be staggered. The piston ring assembly in groove 3 should consist of a spacer, two expanders and three rings. Install the ring in groove 4 with the side marked "Top" toward top of the piston; install the ring in groove 5 with the side marked "Top" toward bottom of the piston.

b. Wipe the barrel, flange and skirt of the cylinder with a clean, lintless cloth. Apply lubricant to the first four inches of the inside of the cylinder barrel. Apply a light coat of sealing compound, Navy Spec 52-C-3081-100, on a new oil seal ring and install a ring over the cylinder barrel against the mounting flange.

c. Insert the piston pin plug in the pin and dip the pin in lubricant.

d. Remove the connecting rod protector. Make sure that the connecting rod is at top center. Install the piston on the connecting rod and insert the piston pin with the plug toward the front.

Note

If a new piston is installed, stamp the engine number and location on the dome. If a used piston is installed, reverse the thrust and anti-thrust sides.

e. Compress the upper rings on the piston and slide the cylinder over the piston until the upper rings and piston pin plug are covered. Relocate the clamp over the lower ring and slide the cylinder in place against the mounting pad. Locate the cylinder with two cap screws installed 180 degrees apart.

f. Locate a spherical washer over each cylinder hold-down screw. Apply sealing compound conforming with Spec MIL-C-4003 to the threads of the cylinder screws. Apply compound sparingly and confine to the threaded area. Leave the spherical washer, and the neck, head, and tip of the screw free of compound. Install the screws

on the engine while the sealing compound is still wet.

g. Install and tighten the cylinder attaching screws. Alternate back and forth across the cylinder until the screws are snug, then torque all the screws to 500–525 pound-inches. Replace the two locating screws with regular screws and washers. Torque the screws. Lockwire the screws in groups of five or install a cap screw locking plate, Stock No. 0232-130571, on each group of five screws. If the locking plate is used, install the end tabs of the locking plate in the slots of the installing tool, Part No. 808124. Position the tool over a group of five cap screws and force locking plate into position using the impact weight of the tool. Secure the plate by inserting a cotter pin through the center cap screw of each plate. Since locking plates are not reusable, use new locking plates at each assembly.

h. Tighten the push rod housing connection outer nut to 400–450 pound-inches. Tighten the push rod housing connection inner nut to 100–125 pound-inches. Lockwire the outer connection nuts to the screw provided in the cylinder. Lockwire the inner connection nuts together.

i. Lubricate the ball ends of the push rod and install it in the push rod housing. Press the rod against the valve tappet socket several times to make sure that the socket is functioning properly.

j. Install a spherical washer over the rocker arm hub bolt with the flat side toward the head of the bolt. Install a packing plug after the washer.

k. Apply a small quantity of lubricant to the rocker arm bearing and roller. Install the rocker arm with the adjusting screw above the push rod. Insert the rocker arm hub bolt with the head toward the center of the cylinder. Secure the rocker arm hub bolt with a packing ring, spherical washer and nut. Tighten the nut with a socket wrench and a torque wrench to 300–375 pound-inches. Lock with a cotter pin.

l. Set the valve clearances.

m. Remove the cover from the cylinder exhaust port and replace the exhaust pipe.

n. Replace the inter-cylinder deflectors and the cylinder head deflectors.

Note

If cylinder No. 1, 2 or 9 has been removed, tighten the main ignition conduit nuts and relocate the cable assembly on the crankcase front section. If cylinder No. 5 or 6 has been removed, replace the front sump.

5-111. ENGINE SHAFT CHECK. Check the engine splined shaft for galling and corrosion in the following manner:

a. Remove the fan and rear cone. Clean the shaft and thrust nut with dry cleaning solvent, Federal Spec P-S-661, and inspect for corrosion. If corrosion exists on the shaft forward of the thrust nut threads, remove the thrust nut as outlined in paragraph 5-112.

b. Clean the shaft and threaded area thoroughly with dry cleaning solvent, being careful not to let the solvent enter the engine. Remove the corrosion residue and polish the affected areas with crocus cloth or with a small buffing wheel using jeweler's rouge or levigated alumina as a polishing agent.

c. If the shaft is pitted, further use of the shaft is dependent upon the depth, character and number of pits. A Report of Unsatisfactory or Defective Material must be submitted whenever an engine shaft is rejected due to corrosion, pitting or galling.

d. Clean the polished area thoroughly to remove all traces of corrosion and polishing agent. Reinstall the thrust nut and tighten to the proper torque as specified in paragraph 5-113.

e. Completely fill the space between the thrust nut and propeller shaft with grease, Spec MIL-L-3545. Apply a thin coating of the same grease to the shaft aft of the fan retaining threads with the exception of the area under the cones. The cones must be kept dry and free of grease to ensure maximum friction between the mating surfaces of the cones, fan hub and shaft.

f. Install the fan as outlined in paragraph 5-182. Spray a light coat of oil over the thrust nut area between the forward nose section and fan.

5-112. REMOVAL—THRUST BEARING NUT. Remove the thrust bearing nut as follows:

a. Assemble the housing and thrust nut adapter (Special Engine Tools) and slide the unit over the shaft. Engage the adapter with the lugs of the thrust bearing nut.

b. Install the splined adapter (Special Engine Tool) over the shaft splines so that the ball handle of the adapter is at the right and the pointer at its left limit of travel on the scale at the top of the housing. Screw the jack and gage assembly (Special Engine Tool) into the hole at the right side of the housing.

c. Build up ram pressure by pumping the jack handle until the force of the ram acting on the ball handle of the splined adapter causes the housing to turn in a counter-clockwise direction, backing the thrust nut off its threads.

d. Remove the torque wrench and splined adapter. Using a lug wrench (Special Engine Tool), loosen the thrust nut until it is finger tight then remove the wrench and nut.

5-113. INSTALLATION — THRUST BEARING NUT. Install the thrust bearing nut as follows:

a. Place the seal rings in the grooves on the thrust nut. Hold the ring down in the groove and check side clearance. Clearance must be within 0.003–0.015 inch.

b. Place the ring in the approximate position it will occupy in the crankcase front section flange. Measure the gap with a feeler gage. Hand fit to obtain a gap of 0.003–0.005 inch. Install the rings and stagger the gaps 180 degrees apart. Coat the threads of the thrust nut with anti-seize compound, Spec JAN-A-669. Swab the rings with engine oil, Spec MIL-L-6082, grade 1100. Install the nut on the engine shaft, working the oil seal rings into place with a brass or fiber drift and run it down as far as it will go by hand. Use lug wrench (Special Engine Tool) for initial tightening prior to using the torque wrench assembly (Special Engine Tool).

c. Tighten the thrust bearing nut with a wrench (Special Engine Tool).

d. Slide the housing and adapter unit (Special Engine Tools) over the engine shaft and engage it with the thrust bearing nut.

e. Slide the splined adapter over the shaft with the ball arm of the adapter to the left.

f. Screw the jack and gage assembly into the hole on the left side of the housing.

g. Build up ram pressure by pumping the jack handle until the force of the ram acting against the ball arm of the adapter causes the housing to turn in a clockwise direction, and screw the thrust bearing nut down. Torque to 14,400–15,600 pound-inches. When thrust nut is properly torqued, release the ram pressure, unscrew the jack and gage, and withdraw the wrench.

5-114. MINOR REPAIR AND PARTS REPLACEMENT.

5-115. GENERAL. The following list of precautions should be taken as applicable when making minor repairs to the engine.

a. Protect the engine from dust, dirt, and inclement weather. Conduct operations in a hangar, if possible. Cover all openings to the engine immediately upon exposure.

b. Carefully inspect all parts to be installed on the engine. Remove all preservation compound and make sure all oil passages are clear.

c. Use new cotter pins, circlets, packing rings, oil seal rings, gaskets, lock wire and lock washers when replacing parts.

d. Do not use a tap in the fiber portion of nuts. Do not use fiber lock nuts after the fiber portion has taken sufficient thread set to permit their being screwed down by hand. Fiber lock nuts should show at least 1-1/2 threads at the end of the studs or bolts when they have been tightened to their final torque value. They must not be subjected to temperatures higher than 121°C (250°F).

e. Check to see that the threads of all studs and bolts are free from nicks and burrs.

f. Calibrate torque wrenches frequently by using weights and a measured lever arm. Use proper adapters with torque wrenches. Apply force evenly until the specified value is reached and hold the wrench handle in position a moment to make certain that the reading is accurate.

g. When it is necessary to align locking devices between parts which are torqued, tighten initially to the minimum torque value. If alignment is not obtained, continue to tighten to obtain alignment until the maximum torque value is reached. If alignment is not thus obtained, back off the parts and repeat the process. If alignment is still not obtained, select parts which will give alignment within the specified torque range.

5-115A. Use the following lubricants and sealants, unless otherwise directed.

a. Lubricant conforming with Spec MIL-L-6082, grade 1100, on metal parts.

b. Anti-seize compound conforming with Spec JAN-A-669 on rubber seal rings.

c. Sealing compound conforming with Spec MIL-C-5092 on threaded joints, plugs, and fittings which are not exposed to high heat or fuel.

d. Sealing compound conforming with USAF Spec 3603 on threaded joints, plugs and fittings which are exposed to high heat or which break into the fuel induction system.

Note

When using sealing compound on threads, apply compound to male threads and, sparingly, to female threads.

e. Sealing compound, Navy Spec 52-C-3081-100, on crankcase parting surfaces and gaskets.

5-116. WELDING OF PARTS. Intake pipes, push rod housings, and cylinder air deflectors which are worn, cracked, or otherwise unfit for service may be repaired by welding. No heat treatment after welding is necessary.

5-117. SURFACE TREATMENT. Blend nicks or scratches in aluminum or magnesium parts. After blending, treat the affected areas as follows:

a. Using a brush, touch up magnesium alloy parts with a dichromate in accordance with Spec MIL-M-3171. If the surface was originally painted, restore any paint which was removed.

b. Use zinc chromate primer, Spec MIL-P-6889, to touch up all painted aluminum parts.

5-117A. ENGINE INSPECTION. Replace the engine if any of the following limits are exceeded:

a. Engine overspeed *exceeding* 3000 rpm.

b. Power exceeding take-off MAP over 15 seconds.

c. Power exceeding 61.5 in. Hg.

The following inspection requirements must be complied with in all cases where the engine overspeed is between 2780–3000 rpm and manifold pressure is under 61.5 in. Hg.

5-117B. OIL SYSTEM INSPECTION. In all instances, magnetic sump plugs, removable oil screens, and oil filters will be removed and thoroughly inspected for metal particles. All oil sumps will be drained through a clean cloth to catch any particles that may be present.

a. Generally, metal particles on the engine oil screens or on the magnetic sump plug are an indication of partial internal failure of the engine. However, due to the construction of the engine oil system it is possible that metal particles may have collected in sludge in the oil system at the time of a previous engine failure; consequently, this must be taken into account when metal particles are found in the engine oil screens or on the sump plugs. Carbon frequently tends to break loose from the interior of the engine in large pieces which have the outward appearance of metal. Carbon can be distinguished from metal by placing the foreign material on a flat metal object and striking it with a hammer. If the material is carbon, it will disintegrate when struck, whereas metal will either remain intact or change shape, depending on the malleability of the metal.

b. The particles of metal found in an engine may be any of five kinds; steel, tin, aluminum, silver, and copper or bronze. A visual inspection as to the color and hardness will occasionally be sufficient to determine the kind of metal present. When visual inspection does not positively identify the metal, a few simple tests may be performed with a permanent magnet, electric soldering iron, and approximately two ounces each of concentrated hydrochloric (muriatic) acid and concentrated nitric acid *(caution must be exercised in handling the acids)*. Steel particles can be isolated by means of a permanent magnet. Tin particles can be distinguished by their low melting point. The soldering iron should be cleaned, heated to about 500 degrees, and tinned with 50-50 solder. Wipe off excess solder. A tin particle dropped on the heated iron will melt and fuse with the solder. Aluminum particles may be determined by their reaction with hydrochloric acid. It will fizz with a rapid emission of bubbles. The particles will gradually disintegrate and form a black residue. Silver and copper or bronze may be distinguished by their respective reactions in nitric acid. A silver particle dropped into nitric acid will react slowly producing a whitish fog in the acid. Copper or bronze will react rapidly, producing a bright green cloud when dropped in the acid.

c. Generally, when metal particles are found and the kind of metal present is determined, the serviceability of the engine will depend upon the quantity and form of the metal. Granular metal particles, in any amount greater than a trace, require a very careful inspection of the engine as the presence of these particles is usually an indication of an impending part failure. The following criteria may be followed when metal is detected:

1. Steel.
   (a) When steel particles are found in splinter or in granular form, engine removal is required.
   (b) Thin steel flakes, when found in quantities not greater than 20 flakes, may not require engine removal. Steel flakes accompanied by aluminum flakes are generally the result of warped piston lands or holes burned in pistons. If steel flakes are found and are not accompanied by aluminum flakes, it is possible that the flakes are from foreign material introduced into the engine through the oil tank.
   (c) Ring fuzz may be on the oil sump magnetic plug of any normal engine. These very fine hair-like particles are the result of normal seating of the piston rings and cylinders, and are not cause for any concern regarding the serviceability of the engine.
   (d) If more than two additional steel flakes or 15 aluminum flakes are found after engine test, as prescribed in paragraph 5-117C, the engine will be removed.
   (e) Tin in any quantity may be disregarded. Tin is used only in plating engine parts in thickness not greater than 0.0005 inch, granular tin will not be found.
2. Aluminum.
   (a) Aluminum particles in granular form may be an indication of piston failure. The following procedure will be carried out when granular particles are found:
      (1) Inspect cylinders by visual examination of cylinder bores and conduct a compression check in an effort to locate a faulty piston. If not more than two faulty

pistons are found, the faulty piston and cylinder assemblies will be changed before continuing with the procedure. If more than two faulty pistons are found, the engine will be removed.

(2) Drain the oil system, flush the oil tank and clean the oil screens.

(3) Test engine as prescribed in paragraph 5-117C.

(4) If not more than five additional granular particles are found during the screen and sump inspection after run-up, the engine may be released for service. If more than five particles are found, the engine must be removed.

3. Silver.

(a) Silver particles in granular form indicate a master rod bearing failure in advanced stages. When these particles are found in any quantity, engine removal is required. Large quantities of silver flakes indicate an excessive loss of bearing or plating material and the engine must be removed as a precautionary measure.

4. Copper or Bronze.

(a) Copper or bronze particles in granular form and in quantities greater than a few particles indicate disintegration of a bushing or valve guide and are cause for engine removal.

(b) Copper or bronze flakes in quantities not exceeding 10 flakes do not necessarily indicate a part failure; however, quantities of copper or bronze flakes in excess of 10 may indicate excessive loss of bushing material and the engine must be removed as a precautionary measure.

5-117C. ENGINE TEST FOR METAL PARTICLES.

a. Drain and flush the oil system and refill the tank.

b. Start engines in accordance with normal starting instructions.

c. Run engine at 2000 rpm to bring it to proper operating temperatures and hover for 10 minutes.

d. Shut down and remove the oil screen and sump plugs and check for metal accumulations. If metal content does not exceed the amount requiring engine removal, the engine may be released for service; however, it must be watched closely for the next 25 hours for any indications of malfunction or internal failure.

5-117D. OPERATION SUBSEQUENT TO INSPECTION. Engine operation is as follows:

a. When the inspection of the engine disclosed no visible damage as a result of overspeeding, the aircraft will be restricted to local flights for a period of 10 hours. During this period, an inspection of the oil screens, filters, and sump plugs will be accomplished at the end of the first, fifth, and tenth hours of operation as prescribed in paragraph 5-117C. Should any one of the inspections of the oil screens, filters, or sump plugs disclose an abnormal amount of metal particles, the engine shall be replaced. However, if the final inspection proves negative, the aircraft shall be unconditionally released for normal flight operation.

b. Should any subsequent inspections of the oil screens, sump plugs, and oil filters performed at normal inspection periods disclose an abnormal amount of metal particles, the engine shall be replaced.

5-118. POWER PLANT CONTROL SYSTEM.

5-119. GENERAL. (See figure 5-19.) The power plant control system consists of the supercharger control, the throttle and mixture control, and the carburetor air heat control. Control motions from the mixture, throttle and carburetor air heat controls in the cockpit are transmitted through cables to the quadrants in the engine compartment. Control rods connected to the quadrants carry the motions to the various attaching points. Reinforced quick-disconnect units on the rod ends make possible removal of the rods without changing the rod lengths. The supercharger control consists of an electrically controlled hydraulic actuator which uses engine oil pressure to position the supercharger clutch control shaft.

5-120. TROUBLESHOOTING.

Trouble	Cause	Remedy
Engine does not stop when mixture is in IDLE CUT-OFF	No springback provided in mixture control rigging (i.e., idle stop on carburetor not reached when cockpit control lever is in IDLE CUT-OFF)	Rerig mixture control
	Carburetor mixture control inoperative	Install new carburetor
	Primer solenoid stuck in open position	Tap solenoid lightly or make continuity check of electrical circuit
	Mixture control disconnected	Inspect cable connections and control rods
Engine idle rpm too high	Throttle control incorrectly synchronized with collective pitch lever	Rerig throttle control
	Improper action of carburetor air door	Check rigging of carburetor air control
Insufficient carburetor heat	Malfunction of air control	Check rigging of control. Inspect door and panels of air ducts for leaks, obstructions, etc

High carburetor air temperature	Carburetor alternate air door not in full cold position	Check position of alternate air door. Rerig if necessary
	Temperature gage indicates maximum temperature	Check operation of gage. Replace if necessary. Check temperature bulb for proper operation. Replace if defective
	Obstruction in carburetor air ducting	Remove obstruction
Stiff throttle	Damage to mechanism or improper lubrication	Inspect for bent or broken parts. Check for free action of all bearings and gear segments in collective pitch lever housings
Throttle tends to open	Excessive compression of throttle balance spring	Adjust balance spring cover to reduce the amount of threads showing on throttle balance guide

5-121. CARBURETOR AIR HEAT CONTROL.

5-122. DESCRIPTION. (See figure 5-19.) The carburetor air heat control consists of a lever mounted on the console assembly, cables (19, 20, 21, and 22) connecting the quadrant (25) mounted under the cockpit floor to a quadrant (12) located in the engine compartment, and a push rod (9) from the engine compartment quadrant to the air control door. The control door is located in a duct on top of the engine cowling. When the control door is in the COLD position, the engine cooling fan forces air into the duct leading to the down-draft carburetor located in the engine accessory section. When the door is in the HOT position, the direct air blast is cut off and carburetor air is drawn from the exhaust manifold shroud.

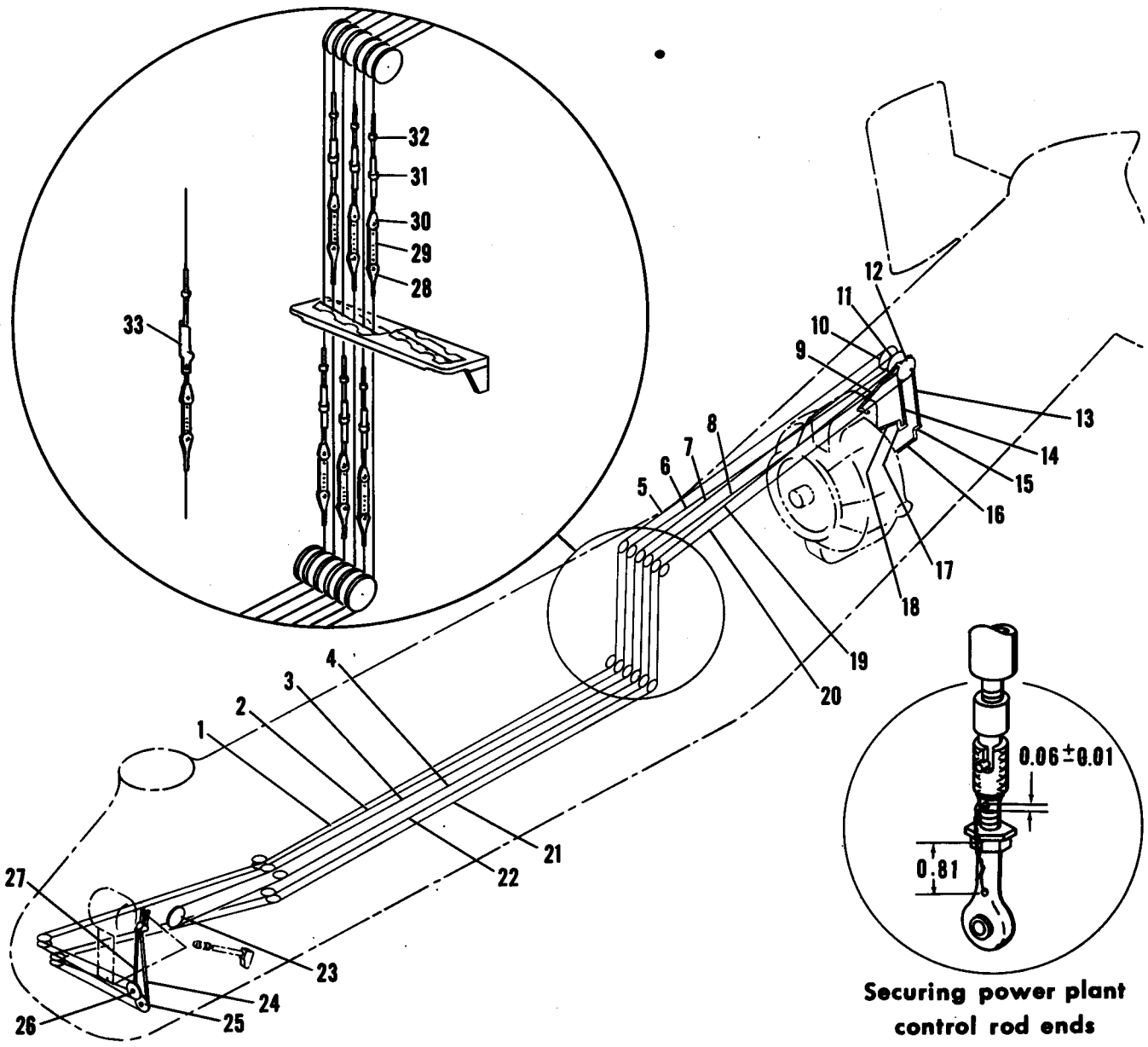

Securing power plant control rod ends

1 Forward Upper Mixture Control Cable
2 Forward Lower Mixture Control Cable
3 Forward Upper Throttle Control Cable
4 Forward Lower Throttle Control Cable
5 Aft Upper Mixture Control Cable
6 Aft Lower Mixture Control Cable
7 Aft Upper Throttle Control Cable
8 Aft Lower Throttle Control Cable
9 Rod Assembly
10 Mixture Quadrant
11 Throttle Quadrant
12 Carburetor Heat Quadrant
13 Throttle Override Tube
14 Tube Assembly
15 Throttle Bellcrank
16 Rod Assembly
17 Mixture Bellcrank
18 Rod Assembly
19 Aft Upper Carburetor Heat Control Cable
20 Aft Lower Carburetor Heat Control Cable
21 Forward Lower Carburetor Heat Control Cable
22 Forward Upper Carburetor Heat Control Cable
23 Throttle Quadrant
24 Tube Assembly
25 Carburetor Heat Quadrant
26 Mixture Quadrant
27 Tube Assembly
28 Terminal
29 Link
30 Clevis
31 Barrel
32 Terminal
33 Quick Disconnect

Figure 5-19. Power Plant Control System

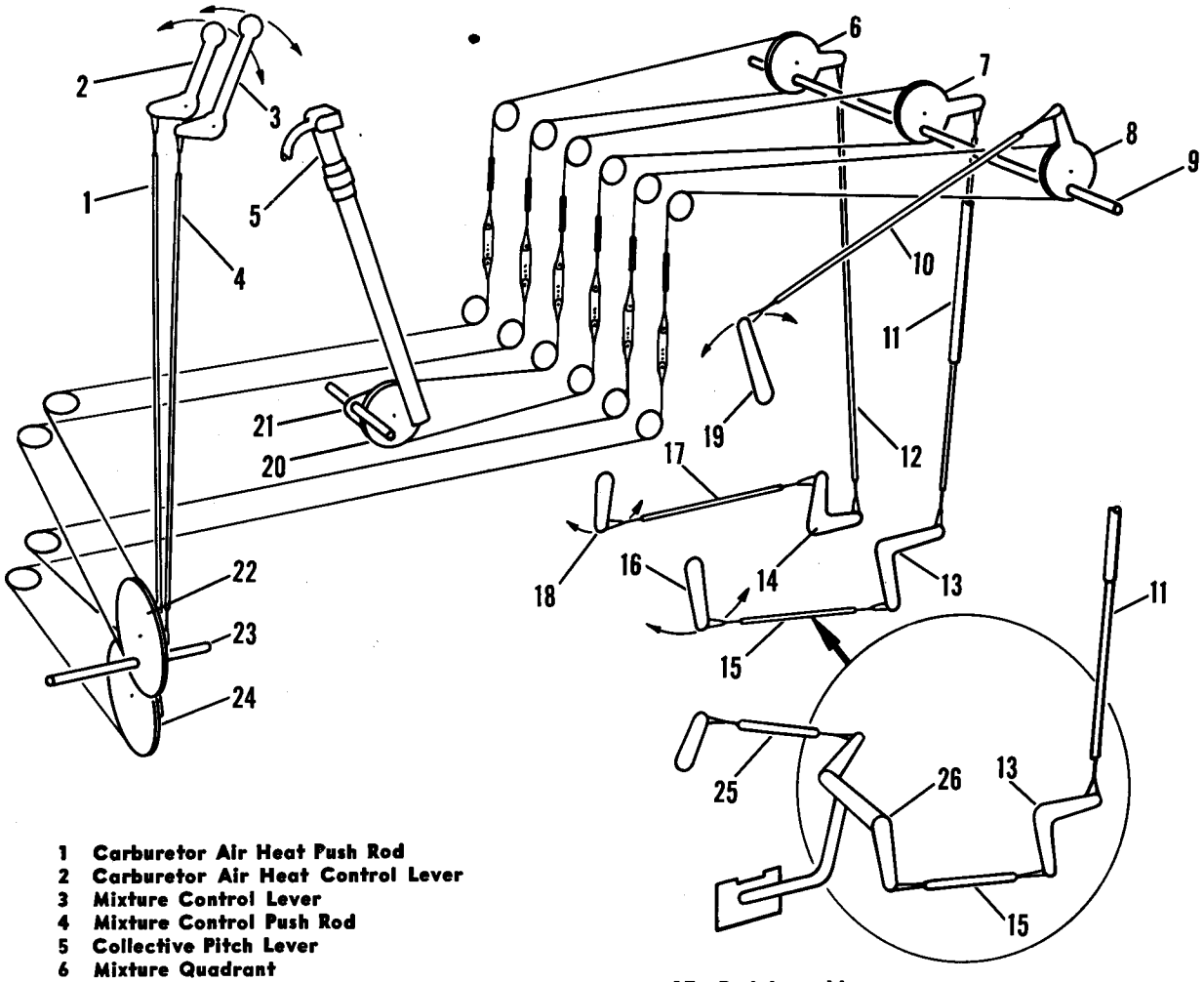

Figure 5-20. Power Plant Control System Schematic—YH-21, H-21A

5-123. ADJUSTMENTS. For all adjustments to the carburetor air heat control see Power Plant Controls Rigging Procedure in this section.

5-124. THROTTLE CONTROL.

5-125. DESCRIPTION. (See figure 5-19.) A throttle-collective pitch synchronization unit is incorporated in the throttle control system. It aids in maintaining a constant rpm by increasing the engine power settings as collective pitch is applied to the rotors. Cables (3, 4, 7, and 8) connect the throttle quadrant (23) on the pilot's collective pitch lever with the engine compartment quadrant (11). A push rod and bellcrank system (13, 15, and 18) extends from the quadrant to the manifold pressure limiter on the carburetor. The throttle setting is controlled by a motorcycle type throttle grip attached to the upper end of the collective pitch lever.

5-126. ADJUSTMENTS. For all adjustments to the throttle control system, see Power Plant Controls Rigging Procedure in this section.

5-127. MIXTURE CONTROL.

5-128. DESCRIPTION. (See figure 5-19.) The mixture control system consists of a control lever mounted on the console, and cables (1, 2, 5, and 6) connecting the mixture control quadrant (26) at the console with the engine compartment quadrant (10), and the push rod and bellcrank system

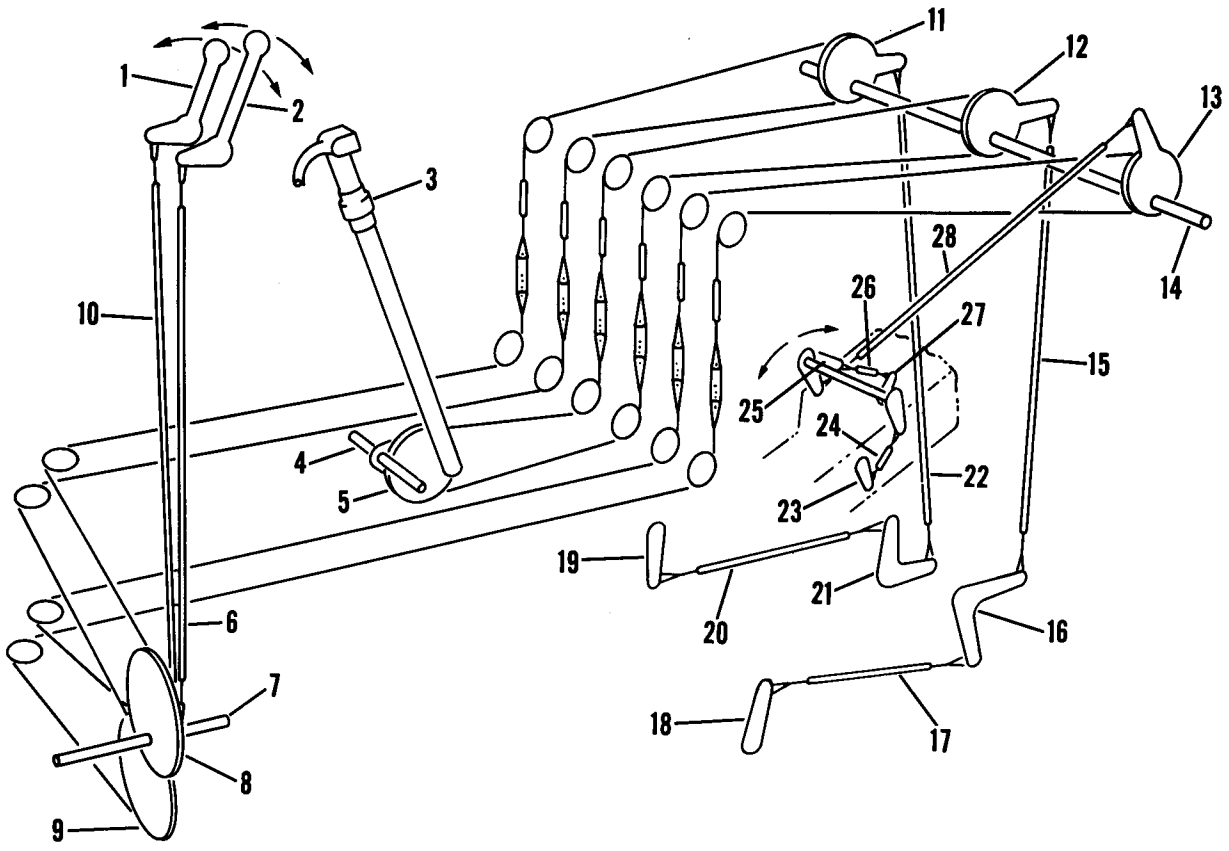

1 Carburetor Heat Control Lever
2 Mixture Control Lever
3 Throttle Control
4 Rigging Pin
5 Throttle Quadrant
6 Mixture Control Rod
7 Rigging Pin
8 Mixture Quadrant
9 Carburetor Heat Quadrant
10 Carburetor Heat Control Rod
11 Mixture Quadrant
12 Throttle Quadrant
13 Carburetor Heat Quadrant
14 Rigging Pin
15 Throttle Override Tube
16 Throttle Bellcrank
17 Throttle Rod Assembly
18 Throttle Arm
19 Mixture Control Lever
20 Mixture Rod Assembly
21 Mixture Bellcrank
22 Mixture Rod Assembly
23 Filter Air Door Arm
24 Filter Air Door Rod Assembly
25 Carburetor Air Door Bellcrank
26 Carburetor Air Door Rod Assembly
27 Hot Air Door Arm
28 Carburetor Air Heat Control Rod Assembly

Figure 5-20A. Power Plant Control System Schematic—H-21B, H-21C

(14, 17, and 16) extending from the engine compartment quadrant to the lever on the carburetor.

5-129. ADJUSTMENTS. For all adjustments to the mixture control system, see Power Plant Controls Rigging Procedure in this section.

5-130. SUPERCHARGER CONTROL.

5-131. DESCRIPTION. (See figure 5-8.) The Wright R-1820-103 engine is equipped with a two speed, gear-driven blower. Speed control of the blower is accomplished through the positioning of the supercharger clutch control shaft by a clutch actuator mounted on the engine accessory case. The actuator is controlled by a switch mounted on the console. When the switch is placed in the HIGH position, a solenoid in the clutch actuator diverts engine oil pressure to a spring-loaded piston connected to the clutch control shaft. The oil, under pressure, forces the piston to compress the spring and pull the clutch control arm out to the high blower position. When the switch is placed in the LOW position, the solenoid blocks off the engine oil, allowing the spring to extend and push the piston and clutch control shaft to the low blower position.

5-132. REMOVAL AND INSTALLATION. Removal and installation of the supercharger clutch control actuator is outlined under Engine Package Build-Up, in this section.

5-133. SUPERCHARGER CHECK. To prolong engine life, it is important that the manifold pressure limitations for particular engine speeds are not exceeded. Exceeding the manifold pressure limitations results in over-boosting, which places excessive strain on the cylinders. To prevent this, ground check the supercharger prior to flight as follows:

a. Start the engine. At 1600 rpm with full low collective pitch, switch from low to high blower. Observe engine oil pressure for slight fluctuation, indicating operation.

b. Increase power to 2300 rpm and 25 inches of mercury manifold pressure. Shift from high to low blower. Engine speed will increase approximately 100 rpm, manifold pressure will decrease by approximately one inch of mercury.

CAUTION

Do not repeat the supercharger clutch shift check at less than five minute intervals. Due to limitations of the YH-21 and H-21A rotor and drive systems, the engine installed in these helicopters is limited to a maximum of 2500 rpm. However, on the H-21B and H-21C helicopters, operation at 2700 rpm is permitted for a maximum of 30 minutes.

5-134. DELETED

5-135. DELETED

5-136. DELETED

5-137. SUPERCHARGER CLUTCH OIL CONTROL VALVE.

5-138. REMOVAL. Remove the supercharger clutch oil control valve as follows:

a. Disconnect the control linkage from the control valve. Put a nut and spacer on the shaft temporarily.

b. Remove the three supercharger clutch oil control valve attaching nuts and washers. Remove the oil control valve assembly and gasket.

c. Unscrew the temporary retaining nut and remove the valve from the housing. Remove the two springs, two washers and two packing rings.

5-139. INSTALLATION. Install the supercharger clutch oil control valve as follows:

a. Slip a spring, stop washer and another spring over the shaft of the clutch oil control valve. Install the spring upper washer and the inner and outer packing. Lubricate the valve and install a spacer and nut on the shaft temporarily.

b. Place a gasket on the valve mounting pad and install the valve assembly over the attaching studs. Secure with washers and fiber lock nuts.

c. Remove the nut and spacer from the shaft. Replace the control linkage.

5-140. POWER PLANT CONTROLS RIGGING PROCEDURE.

5-141. GENERAL. Rigging of the power plant controls is accomplished in two steps. Step one includes locking out of the cockpit controls and adjustment of the connecting rods. Step two includes locking out the engine compartment quadrants and adjusting the connecting rods and bellcranks. Because of differences in the power plant control system, the rigging procedure of the YH-21 and H-21A helicopter power plant controls is described separately from the rigging procedure for H-21B and H-21C helicopter power plant controls.

5-142. ADJUSTING COCKPIT CONTROLS. **YH-21 H-21A**

5-143. THROTTLE. (See figure 5-20.) Adjust the throttle control as follows:

a. Lock the pilot's collective pitch lever in the full down position.

b. Rotate the throttle grip on the collective pitch lever until the hole in the rigging pin retainer of the throttle quadrant (20) lines up with the hole in the fuselage structure.

c. Insert the rigging pins.

5-144. MIXTURE AND CARBURETOR HEAT. (See figure 5-20.) Adjust the mixture and carburetor heat controls as follows:

a. Disconnect the mixture and carburetor heat push-pull rods (1 and 4).

b. Rotate the mixture and carburetor heat quadrants (22 and 24) until the rigging holes line up, then insert the rigging pin (23).

c. Set the mixture control lever (3) in the NORMAL position.

d. Connect rod assembly (4) to the mixture control lever (3) and mixture quadrant (22). Adjust the rod length as necessary to fit. The nominal length of the rod is 17-1/2 (17.50) inches.

e. Center the carburetor heat control lever (2) exactly midway between the built-in stops.

f. Connect rod assembly (1) to the carburetor heat control lever (2) and the carburetor heat control quadrant (24). Adjust the rod length as necessary to fit. The nominal length of the rod is 21.00 inches.

5-145. ADJUSTING ENGINE COMPARTMENT CONTROLS. **YH-21 H-21A**

5-146. THROTTLE. (See figure 5-20.) Adjust the engine compartment throttle control as follows:

a. Align the rigging pin holes in the three engine compartment quadrants (6, 7, and 8) and install the rigging pin (9). This locks all the quadrants in the proper rigging position.

b. Adjust the length of the throttle override tube (11) until the center of the attachment hole in the short arm of the bellcrank (13) is 6-23/64 $\pm$1/16 (6.35 $\pm$0.06) inches above the top of the

bulkhead support beam. The nominal length of the throttle override tube is 36-3/4 (36.75) inches.

c. Disconnect rod assembly (15).

d. On YH-21 helicopters equipped with manifold pressure limiters, check the position of the limiter arm (16) by rotating it to the closed position. The centerline of the arm at the rod attachment hole should be approximately 3/8 (0.375) inch below a line through the pivot point of the arm perpendicular to the face of the limiter.

e. Rotate the limiter arm until the center of the rod attachment hole in the limiter arm is 1-3/16 (1.18) inches from the closed position. Reconnect the rod assembly (15), adjusting the length as necessary. The nominal length of the rod assembly is 12-1/2 (12.50) inches between bolt hole centers.

f. On YH-21 and H-21A helicopters which are not equipped with the manifold pressure limiter, disconnect the short rod assembly (25) and the long rod assembly (15). Move the throttle arm on the carburetor to the open position and reconnect the short rod assembly. Connect the other end of the short rod (25) to the short arm of the bellcrank (26) such that the distance between the bolt hole centers of the throttle arm and bellcrank measures 7-41/64 (7.64) inches.

g. Reinstall the long rod assembly (15) between the long arm of the bellcrank (26) and the bellcrank (13), adjusting the length as necessary. The nominal length of the long rod is 12-1/2 (12.50) inches between bolt hole centers.

h. In the event of any change or replacement in the throttle control system, the white index markings on both collective pitch levers have to be checked for proper alignment. These markings, when aligned, indicate throttle closed.

CAUTION

Improper throttle position indexing may permit the throttle to be partially opened when indicating throttle closed, which may cause engine overspeed when starting.

To check the alignment of the throttle index markings, proceed as follows:

1. With all the engine controls rigged, including idle adjustment, and pilot's collective pitch lever rigged and locked in a full down position, open the throttle.
2. Rotate the throttle slowly toward the closed position until the carburetor lever hits the closed stop. The override control rod must not be compressed in this position. Lock the throttle with the friction lock.
3. The index markings on both collective pitch levers should be aligned. If the markings are not aligned, remove the markings with a water-rinsable type paint remover.
4. Paint a stripe, 0.13-inch wide, on the grip and the switch housing support; this stripe when aligned will indicate throttle closed.
5. If any of the collective pitch levers have been replaced, the first, second, and fourth steps of this procedure must be followed.

5-146A. CARBURETOR BALANCE SPRING. The balance spring used on the type PD12K19 carburetor must always be correctly adjusted in order to obtain proper throttle operation. When the spring is compressed too much, it forces the throttle to advance too rapidly, and, if the spring is not compressed enough, it forces the throttle to close too rapidly. To prevent these malfunctions and to ensure that throttle operation will be balanced throughout the engine start–to–flight range, an optimum throttle balance must be established. This requires an adjustment to the carburetor balance spring in order to balance out the aerodynamic forces that are present on the throttle valve in the carburetor venturi.

Note

Before any adjustments are made on the carburetor, make certain that all other points of possible discrepancies, such as throttle rigging, are checked first.

5-146B. ADJUSTMENT. (See figure 5-20B.) Whenever excessive throttle forces are encountered, the carburetor balance spring may be checked and adjusted as follows:

a. Disconnect throttle rod assembly from the carburetor.

b. Install a torque wrench on the throttle shaft nut (4), located on the right side of the carburetor, when the throttle arm (5), located on the left side of the carburetor, is set at 29/64 (0.4531) inch from the closed throttle stop (6).

c. Relax pressure on the torque wrench and take a reading of the torque value just as the throttle arm located on the right side of the carburetor starts moving toward the *open* position.

d. Reverse the direction of the force on the torque wrench and take a reading of the torque value as the throttle arm starts moving toward the *closed* position. The average torque for the above steps should be 17 ±2 pound-inches.

e. If the torque value is over the limit, loosen the lock nut (1) on top of the balance spring

cover (2), and rotate the cover counterclockwise as required to obtain the desired torque and secure the lock nut.

f. If the torque value is under the limit, loosen the lock nut as in step e. and rotate the cover in a clockwise direction, looking down on the balance spring assembly (3) from above.

g. Repeat steps b. through f. after each adjustment until the desired torque value is obtained.

5-147. MIXTURE. (See figure 5-20.) Adjust the engine compartment mixture control as follows:

a. Disconnect rod assemblies (12 and 17).

b. Position the mixture bellcrank (14) so that the center of the rod attachment hole in the short

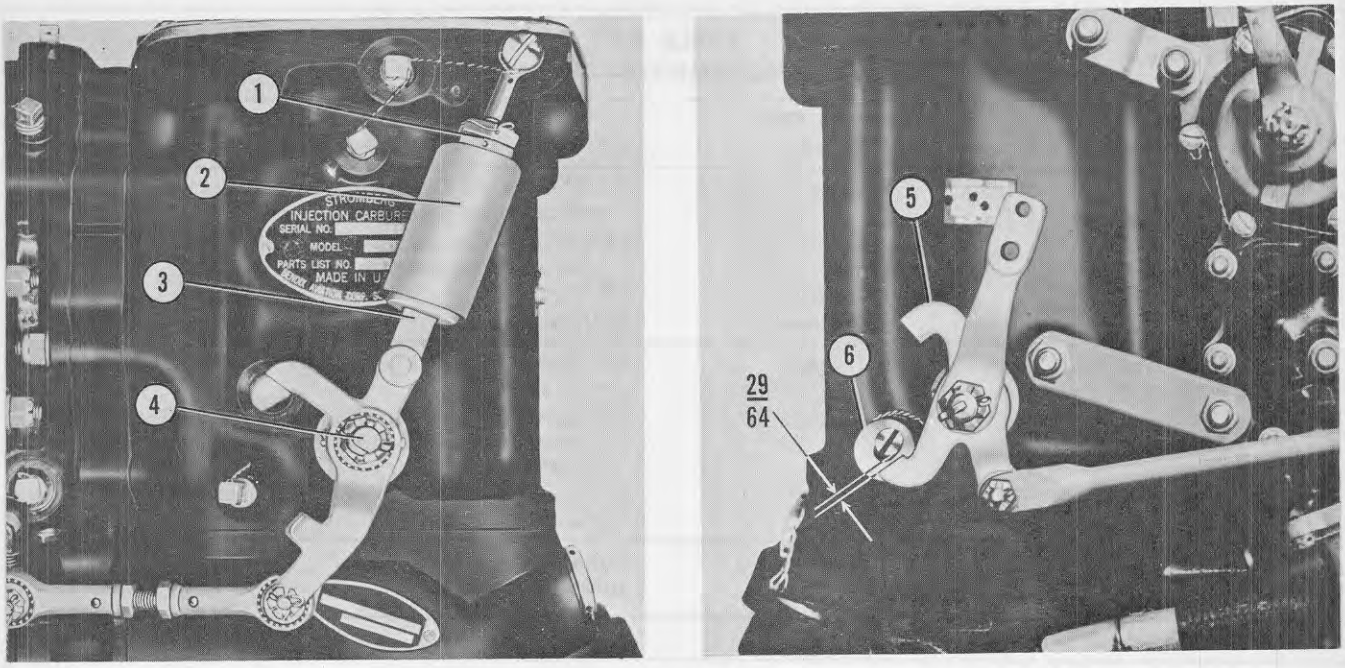

1 Locknut
2 Spring Cover
3 Balance Spring Assembly
4 Throttle Shaft Nut
5 Throttle Arm
6 Closed Throttle Stop

Figure 5-20B. Carburetor Balance Spring Adjustment

arm of the bellcrank is 3-1/2 ±1/4 (3.50 ±0.25) inches from the top of the bulkhead support beam. Reinstall rod assembly (12) adjusting the length as necessary. The nominal length of the rod is 37-15/64 (37.23) inches between bolt hole centers.

c. Move the mixture control lever (18) to the idle cut-off (full aft) position. When the mixture control lever is in this position, the center of the rod attachment hole should be 7-3/4 (7.75) inches from the front face of the carburetor.

Note

If the lever does not lie in this position, remove it and reset it. Do not overtighten the adjusting nut as excessive pressure may distort the star washers, resulting in failure of the washers and permitting the mixture control lever to creep.

d. Move the control lever toward the full rich position until the center of the bolt hole is 1-17/32 (1.53) inches from the idle cut-off position. Reconnect rod assembly (17), adjusting the length as necessary. The nominal length of the rod assembly is 16-3/8 (16.375) inches between bolt hole centers.

5-148. CARBURETOR HEAT. (See figure 5-20.) Adjust the engine compartment carburetor heat control as follows:

a. Disconnect rod assembly (10).

b. Move the carburetor heat door control cam (19) until the center of the bolt hole is approximately 1-5/8 (1.62) inches from the extreme travel position. Reconnect rod assembly (10), adjusting the length as necessary. The nominal length of the rod assembly is 24-5/16 (24.31) inches between bolt hole centers.

5-149. RIGGING FUNCTIONAL CHECK. **YH-21 H-21A**

Note

Remove all rigging pins before making the following checks.

5-150. THROTTLE. Check the throttle movements for the following:

a. Check the movements as indicated in table 5-1, checking for interference and positive stop engagement.

b. Check alignment of white marks on the twist grip and collective pitch lever. Marks should align when the collective pitch lever is down and locked and the throttle is closed.

c. Make certain the throttle override tube is functioning properly without binding or longitudinal free play.

d. Check the cam mechanism on the pilot's collective pitch lever for interference and free movement of parts.

5-151. MIXTURE. Move the mixture control lever to IDLE CUT-OFF. The mixture crank on

TABLE 5-1
THROTTLE MOVEMENTS—YH-21, H-21A

Collective Pitch Lever Position	Twist Grip Position	Manifold Pressure Limiter Position
Full Down	Rigging Pins In	7-1/2° Open (Rig position on helicopters not equipped with manifold pressure limiter) 17-1/2 ±2° Open (Rig position on helicopters equipped with manifold pressure limiter)
	Full Open	55° Open
	Full Closed	Full Closed
9-1/2° Collective Pitch (Rig position of lever)	Full Open	67° Open (On YH-21 helicopters serial numbers 50-1235 thru 50-1239) 72° Open (On YH-21 helicopters serial numbers 50-1240 thru 50-1248 and H-21A helicopters 51-15238 thru 52-8492 75° Open (On H-21A helicopters not covered by above effectivity)
Full Up	Full Open	Full Open
	Full Closed	19° Open

TABLE 5-1A
THROTTLE MOVEMENTS—H-21B, H-21C

Collective Pitch Lever Position	Twist Grip Position	Throttle Arm Position
Full Down	Rigging Pins In	12-1/2 ±2° Open (Rig position)
	Full Open	45 ±4° Open
	Full Closed	Full Closed
9-1/2° Collective Pitch (Rig Position)	Full Open	60° Open
Full Up	Full Open	Full Open
	Full Closed	13 ±4° Open

the carburetor should hit the idle cut-off stop when the cockpit lever is approximately five degrees from the stop. Move the cockpit lever to RICH. The mixture crank on the carburetor should hit the rich stop when the cockpit lever is approximately five degrees from the stop.

5-152. CARBURETOR HEAT. Move the cockpit control lever to the COLD position. The carburetor air door lever should be full forward when the console lever is five degrees from the cold stop. Move the control lever to HOT. The air door lever should be full aft when the control lever is five degrees from the HOT stop.

5-153. CLEARANCE CHECK. **YH-21 H-21A**

5-154. Check the power plant control system as follows:

a. Check the throttle cam mechanism on the collective pitch lever for free operation.

b. Check for misalignment of all rod ends.

Note

Rod end misalignment must not exceed ten degrees in either direction.

c. Check the cable system for adequate clearances.

d. Lockwire the adjustable end fitting of each rod to the rod (see figure 5-20). This is necessary to prevent the adjustable fitting from working loose due to vibration.

5-155. ADJUSTING COCKPIT CONTROLS. **H-21B H-21C**

5-156. THROTTLE. (See figure 5-20A.) The procedure for adjusting the throttle control of H-21B and H-21C helicopters is the same as that for YH-21 and H-21A helicopters.

5-157. MIXTURE AND CARBURETOR HEAT. (See figure 5-20A.) The procedure for adjusting the mixture and carburetor heat controls of H-21B and H-21C helicopters is the same as that for YH-21 and H-21A helicopters.

TABLE 5-2
RIGGING TENSIONS—POWER PLANT CONTROL CABLES

RIGGING TEMPERATURE (°F) \ ANTICIPATED OPERATING TEMPERATURE (°F)	—65	—55	—45	—35	—25	—15	—5	5	15	25	35	45	55	65	75	85	95	105	115	125	135
—65	50	44	38	32																	
—55	56	50	44	38	32																
—45	62	56	50	44	38	32															
—35	68	62	56	50	44	38	32														
—25	74	68	62	56	50	44	38	32													
—15	80	74	68	62	56	50	44	38	32												
— 5	86	80	74	68	62	56	50	44	38	32											
5	92	86	80	74	68	62	56	50	44	38	32										
15	98	92	86	80	74	68	62	56	50	44	38	32									
25	104	98	92	86	80	74	68	62	56	50	44	38	32								
35	110	104	98	92	86	80	74	68	62	56	50	44	38	32							
45	116	110	104	98	92	86	80	74	68	62	56	50	44	38	32						
55	122	116	110	104	98	92	86	80	74	68	62	56	50	44	38	32					
65	122	122	116	110	104	98	92	86	80	74	68	62	56	50	44	38	32				
75	122	122	122	116	110	104	98	92	86	80	74	68	62	56	50	44	38	32			
85	122	122	122	122	116	110	104	98	92	86	80	74	68	62	56	50	44	38	32		
95	122	122	122	122	122	116	110	104	98	92	86	80	74	68	62	56	50	44	38	32	
105							116	110	104	98	92	86	80	74	68	62	56	50	44	38	32
115								116	110	104	98	92	86	80	74	68	62	56	50	44	38
125									116	110	104	98	92	86	80	74	68	62	56	50	44
135										116	110	104	98	92	86	80	74	68	62	56	50

TENSION CABLES WITHIN ±5 POUNDS

USE INSIDE HOLE IN TEMPERATURE COMPENSATION LINK

USE CENTER HOLE IN TEMPERATURE COMPENSATION LINK

USE OUTSIDE HOLE IN TEMP COMPENSATION LINK

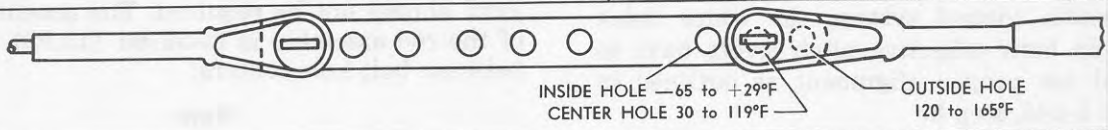

5-158. ADJUSTING ENGINE COMPARTMENT CONTROLS. **H-21B** **H-21C**

5-158A. THROTTLE. (See figure 5-20A.) Adjust the engine compartment throttle control as follows:

a. Align the rigging pin holes in the three engine compartment quadrants (11, 12, and 13) and install the rigging pin (14). This locks all of the quadrants in the proper rigging position.

b. Disconnect rod assemblies (15 and 17).

c. Position the bellcrank (16) so that the center of the rod attachment hole in the long arm of the bellcrank is 4-5/8 ±1/16 (4.625 ±0.06) inches above the top of the bulkhead support beam. Reinstall the throttle override tube (15), adjusting the length as necessary. The nominal length of the throttle override tube is 36-3/4 (36.75) inches between bolt hole centers.

d. Move the carburetor throttle arm (18) to the full *open* position. Loosen and remove the nut and disengage the arm from the carburetor. Now rotate the throttle arm until the center of the rod attachment hole is approximately 4-3/16 (4.1875) inches from the center of the mixture control stud on the carburetor. (See figure 5-20C.) Engage the throttle arm to the serrated face of the throttle control, install and tighten the nut, and secure it with a cotter pin.

Note

Each serration represents an approximate throttle arm movement of 15 degrees. Any incorrect positioning of the throttle arm will be apparent when checking the operation of the throttle control.

e. Move the throttle arm until the center of the rod attachment hole is 7/16 (0.43) inch from the CLOSED position. Reconnect rod (17), adjusting the length as necessary. The nominal length of the rod is 18-31/32 (18.96) inches between bolt hole centers.

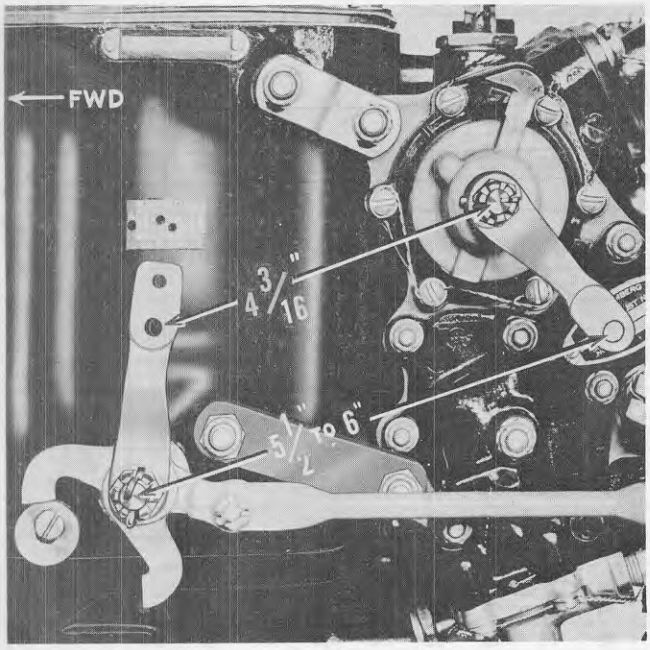

Figure 5-20C. Throttle and Mixture Rigging Dimensions

Note

The starter cutout switch setting should be checked and adjusted whenever the engine control system is disturbed.

f. In the event of any change or replacement in the throttle control system, the white index markings on both collective pitch levers have to be checked for proper alignment as outlined in paragraph 5-146, step h.

5-158B. MIXTURE. (See figure 5-20A.) Adjust the engine compartment mixture control as follows:

a. Disconnect rod assemblies (20 and 22).

b. Position the mixture bellcrank (21) so that the center of the rod attachment hole in the short arm of the bellcrank is 3-15/16 ±1/16 (3.93 ±0.06) inches above the top of the bulkhead support beam. Reconnect rod assembly (22), adjusting the length as necessary. The nominal length of the rod assembly is 35-53/64 (35.82) inches between bolt hole centers.

c. Rotate the mixture control lever (19) to the idle cut-off (full aft) position. When the lever is in this position, the distance between the center of the rod attachment hole on the mixture control arm to the center of the throttle control arm stud should measure between 5-1/2–6 (5.50 –6.00) inches. (See figure 5-20C.) This 1/2 (0.50) inch variation is the difference of one serration of the mixture control arm setting on the carburetor.

Note

The variation on the mixture control arm is acceptable providing the final settings conform to the Rigging Functional Check.

d. Move the mixture control lever until the center of the bolt hole is 1-17/32 (1.53) inches from the idle cut-off position. Reconnect rod (20), adjusting the length as necessary. The nominal length of the rod is 15-59/64 (15.92) inches between bolt hole centers.

5-158C. CARBURETOR HEAT. (See figure 5-20A.) Adjust the engine compartment carburetor heat control as follows:

a. Disconnect rod assembly (28).

b. Rotate the carburetor air door bellcrank (25) so that the centerline of the long arm of the bellcrank lines up with the centerline of rod assembly (26).

c. Reconnect rod assembly (28).

d. Disconnect rod assembly (24) at the aft connection point.

e. Adjust the length of rod assembly (28) so that the distance between the seal and the leading edge of the carburetor air door is the same (within 1/16 (0.06) inch) for both the cold air position and the filtered air positions (full forward and full aft positions, respectively, of the cockpit control lever). Further adjustment of rod (28) should not be required. The nominal length of the rod assembly is 15-59/64 (15.92) in inches between bolt hole centers.

Note

During the adjustment described in paragraph b., rod (27) may be temporarily lengthened, if necessary, to obtain a clearance of from 1/8–1/4 (0.125–0.250) inch between the leading edge of the door and seal.

f. Shorten rod (26) sufficiently to fully close the air door. The door should close tightly so that a force of two to ten pounds applied perpendicularly to the air door operating arm (27) is necessary to break contact between the air door and the seal in both the COLD and FILTERED AIR positions. The nominal length of the rod assembly is 6.00 inches between bolt hole centers.

5-158D. RIGGING FUNCTIONAL CHECK. **H-21B H-21C**

Note

Remove all rigging pins before making the following checks.

5-158E. THROTTLE. Check the throttle movements for the following:

a. Check the movements as indicated in table

5-1A, checking for interference and positive stop engagement.

b. Check alignment of white marks on the twist grip and collective pitch lever. Marks should align when the collective pitch lever is down and locked and the throttle is closed.

c. Make certain the throttle override tube is functioning properly without binding or longitudinal free play.

d. Check the cam mechanism on the pilot's collective pitch lever for interference and free movement of parts.

5-158F. MIXTURE. Move the mixture control lever to IDLE CUT-OFF. The mixture crank on the carburetor should hit the idle cut-off stop when the cockpit lever is approximately five degrees from the stop. Move the cockpit lever to RICH. The mixture crank on the carburetor should hit the rich stop when the cockpit lever is approximately five degrees from the stop.

5-158G. CARBURETOR HEAT. Move the control lever to the COLD position. The center of the bolt which attaches the rod to the filtered air door operating arm should be not more than 1/4 (0.250) inch from the extreme limit of travel in the cold air direction. Move the control lever to HOT. The leading edge of the air door should be not more than 1/2 (0.50) inch from the forward edge of the carburetor air duct door opening. Move the control lever to FILTERED AIR. The air door in the carburetor should close off the carburetor air duct and open the filtered air duct.

5-158H. CLEARANCE CHECK. **H-21B H-21C**

5-158I. Check the power plant control system as follows:

a. Check the throttle cam mechanism on the collective pitch lever for free operation.

Note

Rod end misalignment must not exceed ten degrees in either direction.

b. Check the cable system for adequate clearances.

c. Lockwire the adjustable end fitting of each rod to the rod (see figure 5-19). This is necessary to prevent the adjustable fitting from working loose due to vibration.

5-158J. INSTALLING CABLES.

5-158K. Install the power plant control cables using figure 5-19 and table 5-3 as a guide to identify cables and their routing. Tension cables to preloads given in table 5-2. See figure 5-19 and table 5-2 for installation of temperature compensation links. Quick disconnect units have been incorporated in the power plant control system of the H-21B and H-21C helicopters. These disconnect units eliminate the necessity of rerigging the control cables after initial rigging and tensioning.

TABLE 5-3
POWER PLANT CABLES COLOR CODE

Note

All cables in the Power Plant Control System are 3/32 (0.0937) inch in diameter

	Upper	Lower
THROTTLE	3 Red	3 Green
MIXTURE	3 Blue	3 Yellow
CARB AIR	3 Black	3 White

5-159. POWER PLANT IGNITION AND STARTING SYSTEM.

5-160. GENERAL. The function of the ignition and starting system is to turn the engine over and to furnish the necessary power to fire the spark plugs. The starter switch, located on the collective pitch lever, when depressed causes the contacts of the starter relay to close, allowing a direct flow of current from the battery or external power source to the starter. A starter cutout switch is incorporated, which causes the starter switch to become *inoperative* unless the throttle is closed and the clutch is disengaged. The ignition switch, located on the console, labeled OFF, L, R, BOTH, is used for grounding left, right, or both magnetos. A vibrator coil and condenser are used and connected into the starter circuit for starting the engine.

5-161. STARTER.

5-162. DESCRIPTION. The starter is a four pole, series wound, direct cranking type. The 28-volt positive terminal extends through the frame and the negative terminal is grounded to the helicopter. Power from the battery or external power source is applied to the starter through the starter relay.

5-163. REMOVAL AND INSTALLATION. Removal and installation of the starter is outlined under Engine Package Build-Up in this section.

5-164. MAGNETOS.

5-165. DESCRIPTION. Two magnetos mounted on each side of the starting motor are used to supply current to the spark plugs. The left magneto supplies current to the rear set of plugs and the right magneto to the front set. A ground wire from each magneto is connected to the ignition switch, located on the console, for the purpose of grounding each magneto alone or grounding both simultaneously.

5-166. REMOVAL AND INSTALLATION. Removal and installation of the magnetos is outlined under Power Plant Maintenance in this section.

5-167. VIBRATOR AND CONDENSER.

5-168. DESCRIPTION. For initial starting, a vibrator and a condenser are used and connected into the starter side of the relay. When the starter switch is closed, the starter relay is energized, furnishing current to the vibrator whose function is to assist the right magneto in providing high tension current to the spark plugs for starting. With the ignition switch in BOTH position, the engine should start to fire and the starter switch should be opened, disconnecting the vibrator, condenser, and starter from the circuit and permitting the magnetos to furnish the current for the spark plugs. The function of the condenser is to absorb the spark across the contacts of the vibrator.

Note

These units function only while starting engine.

5-169. REMOVAL AND INSTALLATION. For removal and installation of the vibrator, see Engine Package Build-Up, in this section.

5-169A. STARTER CUTOUT SWITCH.

5-169B. DESCRIPTION. The starter cutout switch is a plunger type micro-switch mounted on a bracket and is located in the engine compartment at station 521.50. The operation of the switch is actuated by the throttle linkage. The purpose of this switch is to prevent engine overspeed when starting, by closing the starter switch circuit only if the throttle is closed. A connection is also made to the engage side of the clutch friction switch so that the pilot can restart the engine while in the air with the rotors engaged and the throttle open. The electrical circuits are shown in Section X.

5-169C. REMOVAL. Loosen and remove the two flat nuts from the plunger end of the switch. Pull switch clear of mounting bracket so that the wire terminal guard can be removed and wires detached from the terminals.

5-169D. INSTALLATION. Installation is the reverse of the removal procedure.

5-169E. RIGGING PROCEDURE. The procedure for rigging the starter cutout switch is as follows:

Note

The throttle must be adjusted so that the engine idles at 1000–1100 rpm before attempting any starter cutout switch rigging. Refer to the paragraph on Idle Mixture and RPM Adjustments in this section.

a. With the engine not running, but the idle stop on the carburetor properly adjusted, close the throttle until the idle stop is contacted.

b. With the throttle against the idle stop, adjust the switch until it just closes electrically in this position. Hold this position temporarily by tightening the lock nuts.

c. After determining the position of the switch per step b., advance the switch by turning the lock nuts 2-1/2 turns, ±10 degrees.

Note

Turn the lock nuts counterclockwise as viewed from the rear of the helicopter.

d. Lock and secure the switch firmly in this position. Check the setting by starting the engine and running it up to 1450 rpm. Lock the throttle in this position and stop the engine, using the mixture control. Turn the ignition switch to the OFF position and press the starter switch. This *should not* energize the starter.

e. Repeat these checks at 1425, 1400, and 1375 rpm to determine if the rpm at which the starter can be energized is at least 1375, but not exceeding 1425. If not, adjust the starter cutout switch as follows:

1. If below 1375 rpm, advance the microswitch by backing off the aft locking nut and moving the switch forward.
2. If above 1425 rpm, move the microswitch aft.

f. Check the switch setting after each and every adjustment.

g. Lock and secure the switch firmly in this position. This constitutes final rigging of the starter cutout switch.

5-170. POWER PLANT COOLING SYSTEM.

5-171. GENERAL. (See figures 5-21, 5-21A, and 5-21B.) The engine cooling system consists of the engine fan, cowling, and stator assembly, plus the necessary air inlets and outlets. Air is taken into the engine compartment through the inlet in the top of the fuselage just aft of the cabin. The air is forced through the cowling and around the engine cylinders by the fan mounted on the engine crankshaft. A curtain (see figure 5-3) is installed between stator assembly and the bulkhead which prevents the expelled warm air from being mixed with the incoming cool air. Air is expelled through the two circular outlets just aft of the engine.

5-172. COWLING.

5-173. DESCRIPTION. (See figure 5-21A.) The engine cooling system cowling is made of sheet aluminum formed to provide passages for the

cooling air. A stator ring (14), located immediately behind the cooling fan (16), acts as a diffuser for the air passing through it. The cowling surrounding the engine is in sections or panels (5) which are secured to supporting frames (1) by Cam Loc fasteners. The panels are removable for access to the engine cylinders and spark plugs. Cooling air for the engine oil cooler is taken into a duct (17) on the lower side of the cowl. Cooling air for the transmission oil cooler is taken into a flexible duct attached to the carburetor air intake duct (6 and 9). Filtered carburetor air is drawn in through the filtered air duct (10, 11, and 24). Only the H-21B and H-21C helicopters are equipped with the filtered air duct.

5-174. REMOVAL. (See figure 5-21A.) The following procedure covers removal of the cowling when the engine is removed from the helicopter:

a. Remove the fan assembly (16).

b. Remove all cowling panels (5).

c. Remove the transmission-carburetor air duct (6 or 9). On the H-21B and H-21C helicopters, disconnect the flexible filtered air duct (10) from the carburetor air duct.

d. Remove the engine oil cooler air ducts (17 and 19) to prevent crushing of the ducts during field removal.

e. Remove the bolts which attach the cowling support assemblies (1) to the support tee (2) and brackets (3 and 4) on the cylinders.

f. Remove the support tee (2) and brackets (3 and 4).

g. Remove the bolts and fasteners which attach the support assemblies (1) to the stator assembly (14) and remove the supports.

Note

If the cowl supports are cracked, they should be replaced with supports of a

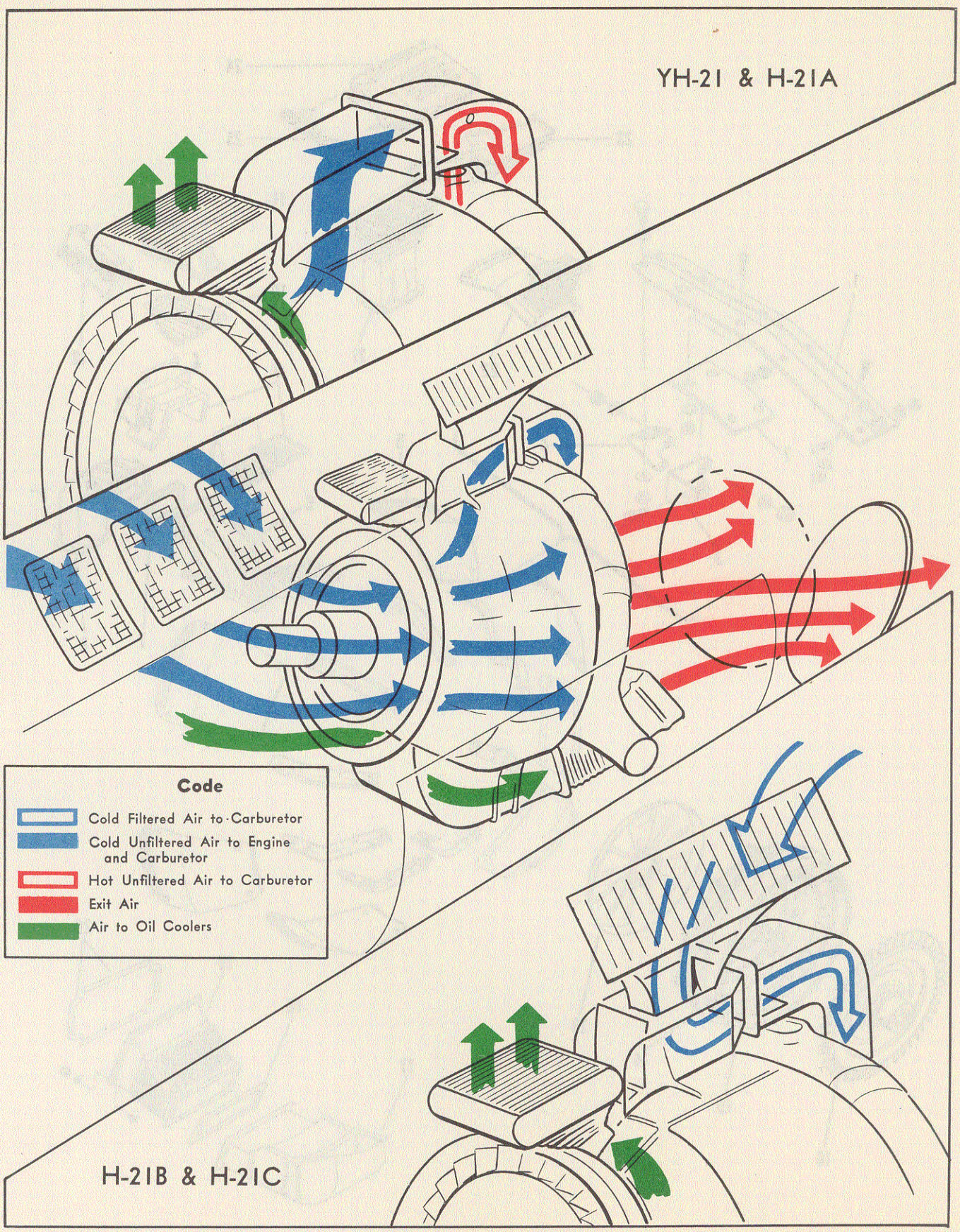

Figure 5-21. Engine Cooling Air Flow Schematic

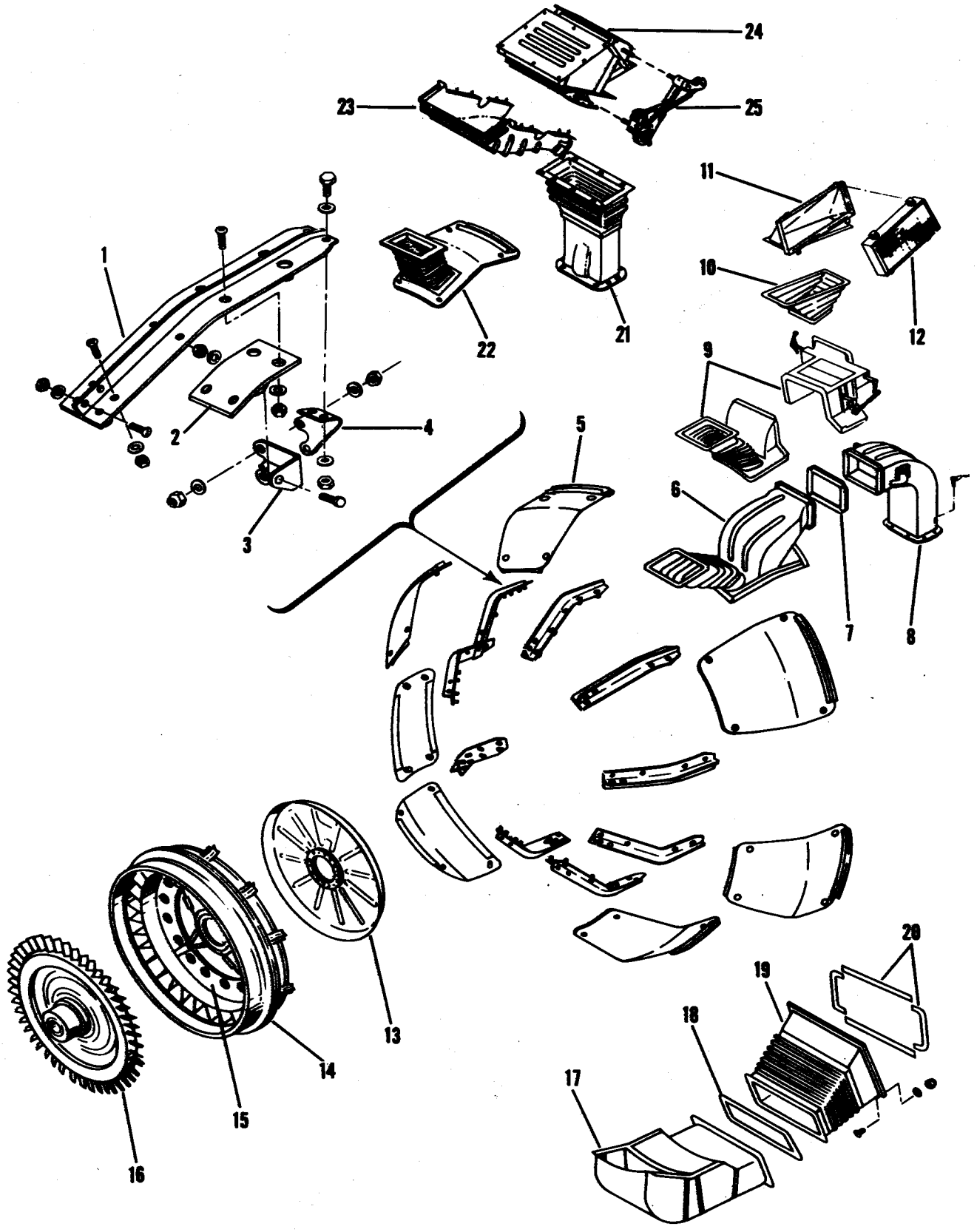

Figure 5-21A. Engine Cowling

NOMENCLATURE KEY FOR FIGURE 5-21A

1 Supports
2 Support Tee
3 Bracket
4 Bracket
5 Cowl Panels
6 Carburetor Air Duct—YH-21, H-21A
7 Gasket
8 Carburetor Air Duct
9 Carburetor Air Duct—H-21B, H-21C
10 Flexible Filter Duct—H-21B, H-21C
11 Filter Duct—H-21B, H-21C
12 Air Filter—H-21B, H-21C
13 Stator Support—H-21A[22], [30], H-21B, H-21C[23]
14 Stator Assembly
15 Stator Support—YH-21, H-21A[31]
16 Fan
17 Oil Cooler Duct
18 Gasket
19 Flexible Duct
20 Gaskets
21 Carburetor Aft Duct Assembly[40]
22 Transmission Oil Cooler Duct[40]
23 Carburetor Forward Air Duct Assembly[40]
24 Carburetor Air Filter Duct Assembly[40]
25 Duct Door Control Linkage[40]

heavier material (0.125 inch). The old supports may be used as templates. All supports must be replaced at the same time.

h. Remove the nuts which attach the stator assembly adapter plate to the engine crankcase and remove the stator assembly (14). If the stator is found to have been rubbed or gouged by the fan blades, refer to the applicable Handbook of Structural Repair Instructions for repair data.

i. Remove bolts which attach stator ring turnbuckles to stator ring and adapter plate.

j. Remove the fasteners which secure the filtered air flexible duct (10), found on the H-21B and H-21C helicopters, to the underside of the fuselage deck and remove the duct.

k. To remove the filter (12), loosen the fasteners on the filter air door located on the dorsal fairing and remove the four fasteners which attach the filter to the upper duct. The upper duct (11) may be removed by removing the 20 bolts attaching it to the fuselage. If necessary, the filter may be cleaned as directed in the following paragraph.

5-174A. CLEANING OF CARBURETOR AIR FILTER. To insure an unrestricted air supply to the carburetor, the cleaning element of the carburetor air filter must be kept clean. This is especially true if the helicopter is being operated from a dirt runway or at a time when dusty conditions exist during flight. The procedure described below should be followed when cleaning the filter.

a. Wash the filter in cleaning solvent, Federal Spec P-S-661. While washing, rock the filter or agitate the cleaning fluid to insure removal of dirt from the innermost parts of the filter element. The cleaning should be accomplished by using a vat of sufficient size to permit thorough cleansing.

b. Thoroughly dry the filter element by placing the filter at a 25 degree angle on a draining rack.

CAUTION

It is imperative that, after washing, the element be thoroughly dried prior to immersing in oil; otherwise, the air filter element will not be properly coated, resulting in impaired cleaning efficiency.

c. Immerse the filter in a mixture composed of one part corrosion-preventive compound, Spec MIL-C-6529, type II, and three parts of lubricating oil, Spec MIL-L-6082, grade 1100, for a period of from two to five minutes. The immersion process should be accomplished by using a vat of sufficient size to permit thorough absorption and should be in a room of moderate temperature.

d. Drain the filter by placing on a draining rack at a 25 degree angle. The filter should be allowed to drain for from two to four hours prior to installation.

5-175. INSTALLATION. (See figure 5-21A.) Install the cowling as follows:

a. On YH-21 and H-21A[31] helicopters, attach the adapter plate to the stator assembly with the eight turnbuckles. Do not tighten the turnbuckles.

Note

The out-of-round tolerance for the stator assembly is 0.030 (1/32) inch. Should the assembly exceed this dimension, install it and the fan assembly on the engine. If the correct fan-to-stator clearances can be maintained, the out-of-round stator may be used.

b. Attach stator ring assembly to engine crankcase. Torque bolts to 350–400 pound-inches.

c. Install brackets (3 and 4) for cowling support assemblies.

d. Install cowling support assemblies (1).

e. Install panels (5) and ducts (17, 19, and 6). On the H-21B and H-21C helicopters, replace the air filter and filter duct.

[22] Ser No. 52-8487 thru 52-8492.
[23] Ser No. 51-15885 thru 55-4221.
[30] Ser No. 51-15262 and subsequent.
[31] Ser No. 51-15238 thru 51-15261.
[40] Ser No. 56-2015 and subsequent.

f. Install fan (16) and adjust stator turnbuckles to give correct fan-to-stator ring clearance (see Cooling Fan, in this section). On the H-21B helicopters and the H-21A[22] and H-21C[23] helicopters having the disc-type stator support, no adjustment for clearance is necessary.

5-175A. CARBURETOR AIR INDUCTION SYSTEM—H-21C.

5-175B. DESCRIPTION. (See figures 5-21A and 5-21B.) An improved type of carburetor induction system is being installed on certain H-21C helicopters[40]. The system consists of an air duct assembly, leading from the opening in the upper deck to the carburetor, and an air filter duct, utilized to conduct outside filtered air to the carburetor air duct assembly. The carburetor air duct is rigidly mounted to the fuselage and is connected to the carburetor through a flexible duct. Included in the air duct assembly is a passageway for obtaining hot air from the exhaust manifold shroud. The selection of *hot* or *cold* air for the carburetor is accomplished by means of an air door in the duct, mechanically operated from the cockpit. When the carburetor heat control lever is placed in the *forward* position, the air door is lowered, blocking hot air from the exhaust manifold shroud and opening the passage for the entrance of cold air to the carburetor. However, when the lever is placed in the *aft* position, the air door is raised, thus blocking the cold air passage and admitting hot air from the exhaust manifold shroud to the carburetor. In addition, the selection of either filtered or unfiltered air (both hot and cold) is possible and is accomplished by means of an alternate air door, installed in the air duct assembly and mechanically actuated from the cockpit.

5-176. COOLING FAN.

5-177. DESCRIPTION. (See figure 5-23.) The cooling fan is constructed of two large alumninum alloy bulkheads riveted to circular hub flanges. Individual blades (13) are bolted in place between the two bulkheads at their outer circumference. Small separator channels (14) are attached to the bulkheads between the blades. The assembly is bolted to a steel hub (20) which is splined to the engine crankshaft, using cones (19 and 21). An adapter (25) is bolted to the hub (20) and to the drive shaft leading to the central transmission.

5-178. TROUBLESHOOTING.

Trouble	Cause	Remedy
Vibration	Fan out-of-track	Retrack fan
	Fan out-of-balance	Rebalance fan
	Fan retaining nut loose on engine shaft	Retorque nut to proper value
	Cones not seated properly	Remove fan hub and reseat cones
	Cracks in outer rim of fan bulkhead	Install new fan
Fan loose on hub	Rivets and bolts loose	If bolts, check for hole elongation and retighten. If rivets, install new fan
Fan blades loose	Blade mounting deteriorated	Replace blade and balance fan
	Blade attaching bolts loose	Retighten to proper torque
Fan difficult to remove	Snap ring not installed in hub	Retighten retaining nut, install snap ring, then loosen nut (snap ring acts as a partial puller)
Worn fan blade tips	Stator ring eccentric	Readjust stator ring turnbuckles

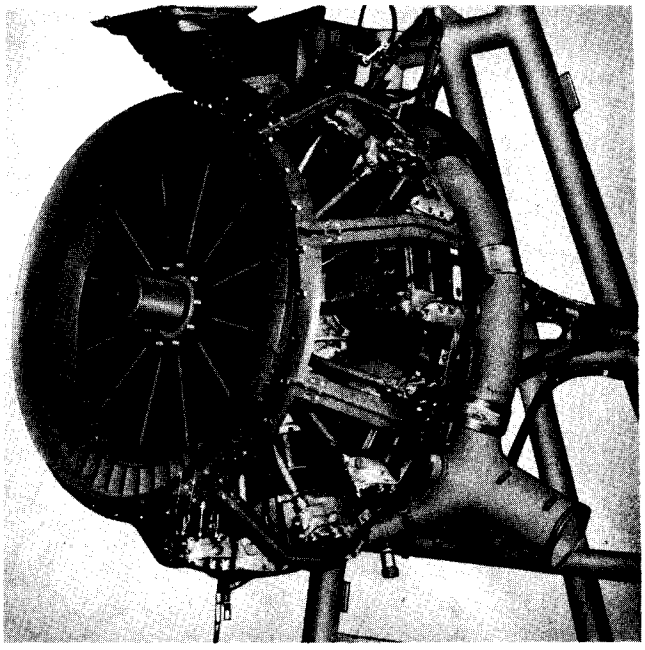

Figure 5-22. Stator and Supports

5-179. REMOVAL. (See figure 5-23.) Remove the engine cooling fan as follows:

a. Remove the drive shaft connecting the central transmission to the engine (see Drive Shafting in this section).

b. Unscrew the fan hub nut with special hub nut torque wrench (figure 1-27).

Note

The nut will act as a puller to pull the hub part way from the engine crankshaft.

c. Remove fan assembly from engine crankshaft.

Note

The engine shaft and fan hub must be protected from the elements and from

[22] Ser No. 52-8487 thru 52-8492.
[23] Ser No. 51-15885 and subsequent.
[40] Ser No. 56-2015 and subsequent.

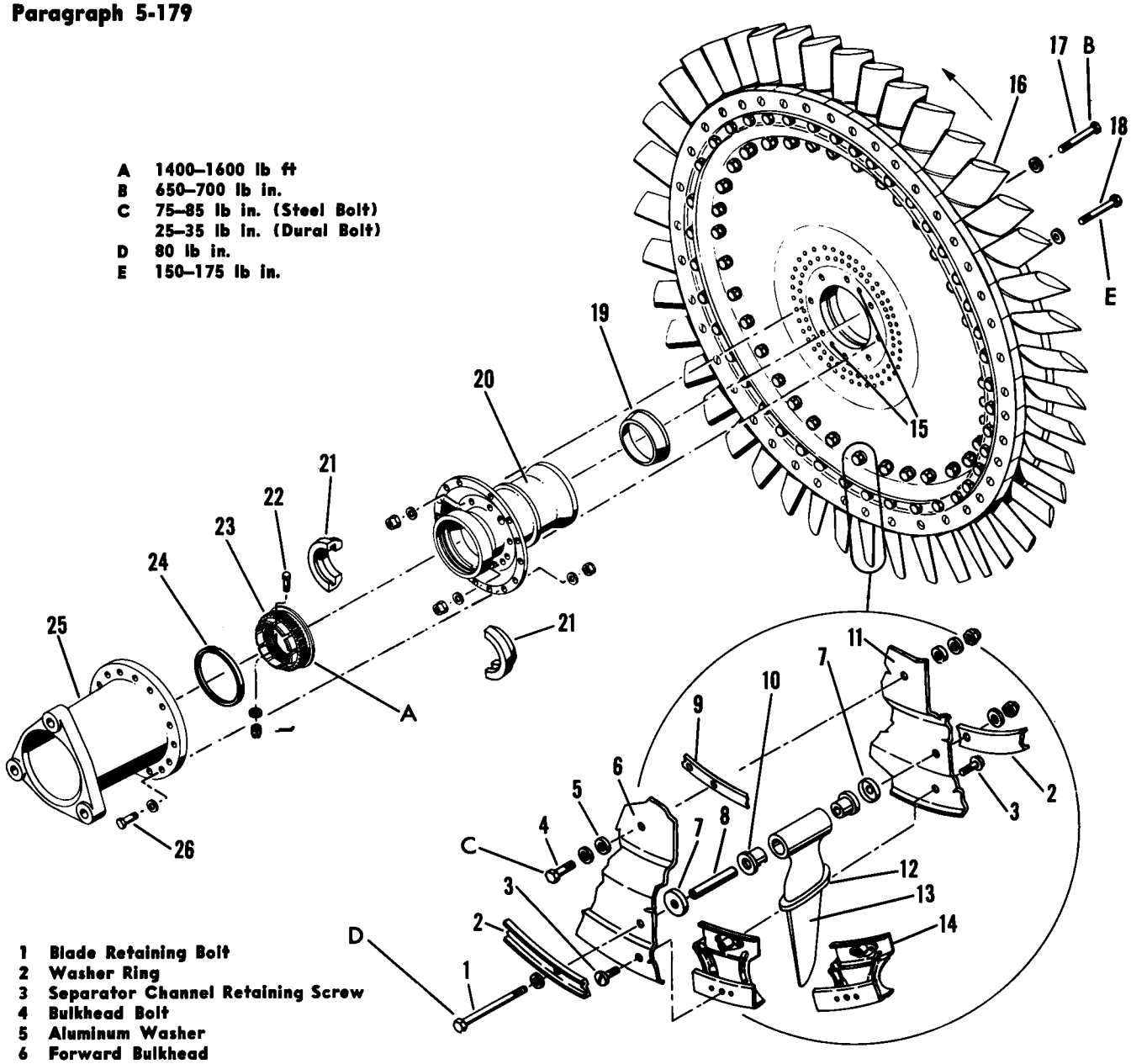

1 Blade Retaining Bolt
2 Washer Ring
3 Separator Channel Retaining Screw
4 Bulkhead Bolt
5 Aluminum Washer
6 Forward Bulkhead
7 Ferrule
8 Collar
9 Bulkhead Spacer
10 Fan Blade Bushing
11 Aft Bulkhead
12 Blade Insulator Band
13 Fan Blade, 43
14 Separator Channel, 43
15 Bulkhead Flange Dowel Pin
16 Fan Assembly, Without Hub
17 Fan Hub Locator Bolt, two
18 Fan Hub Bolt, six
19 Inner Cone
20 Fan Hub
21 Split Cone
22 Fan Retaining Nut Lock Bolt
23 Fan Retaining Nut
24 Lock Ring
25 Fan Hub Adapter
26 Adapter to Hub Retaining Bolt

Figure 5-23. Cooling Fan

damage as soon as the fan is removed. If no maintenance is to be performed immediately on the engine shaft, apply a light coating of grease, Spec MIL-L-3545, install a sleeve over the splines, and screw a propeller shaft thread cap on the end. If a sleeve and cap are not available, wrap rags around the shaft and tape securely. A light coating of grease, Spec MIL-L-3545, should be applied to the hub parts of the fan if no maintenance is to be performed immediately on the fan assembly.

If the stator is found to have been rubbed or gouged by the fan blades, refer to the applicable Handbook of Structural Repair Instructions for repair data on the blades.

Note

The allowable end play on the fan blades should not exceed the following tolerances:

a. Total allowable longitudinal play (fore and aft) is 0.0156 (1/64) inch.

b. Total allowable lateral play (left to right) is 0.0625 (1/16) inch.

5-180. DISASSEMBLY. (See figure 5-23.) Mark all fan parts during disassembly to insure reassembly in the same relative positions. Disassemble as follows:

a. Remove the bolts (26) which secure the fan hub adapter (25) to the fan hub.

b. Remove the lock ring (24), fan retaining nut (23), and split cone (21).

c. Remove the hub (20) from the fan.

d. To disassemble the fan itself, remove the separator channel retaining screws (3), blade retaining bolts (1), and bulkhead bolts (4) and separate the two bulkheads (6 and 11).

Note

Two dowel pins are used to align the bulkheads. Do not attempt to press out these pins.

5-181. ASSEMBLY. (See figure 5-23.) Assemble the engine cooling fan as follows:

a. Place a bushing (10) in each end of each blade (13). On YH-21 helicopters the bushings are rubber while those used on the H-21A, H-21B, and H-21C helicopters are phenolic. When phenolic bushings are used, the fan-to-stator clearance decreases. See Fan installation in this section for proper clearance.

b. Slide a collar (8) in each blade and place a ferrule (7) over the exposed end of each bushing (10).

c. Place the washer ring (2) in place on the forward bulkhead (6). Insert all blade retaining bolts (1) and bulkhead bolts (4).

Note

Bulkhead bolts (4) are to be inserted with a coating of wet zinc chromate primer.

d. Lay the forward bulkhead (6) on a work bench or other suitable flat working surface.

Note

It will be necessary to place blocks under the bulkhead bolts (4) to prevent them from falling out of the bulkhead (6).

e. Place a blade (13) on each blade retaining bolt (1).

f. Place a separator channel (14) between each blade.

g. Lay the bulkhead spacer (9) over the bulkhead bolts (4).

h. Place the aft bulkhead (11) on the forward bulkhead (6), using the dowels (15) to align the bulkhead ends and tighten bolts.

Note

Torque the blade retaining nuts to 80 pound-inches. The nuts on the bulkhead bolts (4) are torqued to 75–85 pound-inches for steel bolts, and 25–35 pound-inches for dural bolts.

i. Insert separator channel retaining screws (3).

j. Thoroughly clean the fan hub (20) and the fan mating surfaces with a mixture of equal parts of acetone and benzene. Brush on a thin coating of moly sulphide graphite lubricant, DF 252 (Allan Lubricants Co, Pittman, N J). Assemble the fan hub to the fan, while the coating of lubricant is still wet, by aligning the hub to the fan with the two locator bolts (17). Secure the fan hub to the fan with six bolts (18). Torque the nuts for the two locator bolts to 650–700 lb in. and torque the nuts for the other six bolts (18) to 150–175 lb in.

k. *Check fan for proper track.* Mount a dial indicator so that the indicator button touches the fan bulkhead at the blade root. The fan must not be more than 0.060 inch out-of-track. Correction of an out-of-track fan may be accomplished by loosening the bolts on the outer circumference of the fan and lightly tap the out-of-track side of the fan with a rubber mallet, then tighten the bolts to proper torque and recheck track. Continue this operation until the fan is within correct limits.

Note

Tighten bolts around the circle in sequence.

l. *Check fan for proper balance.* Check the fan in at least two positions 90 degrees from each other. For correct balance there must be no tendency to rotate in either of these positions. Correct small amounts of unbalance by adding washers under the bolts (1) on the light side of the fan. Correct larger amounts of unbalance by adding sheet metal plates to the light side of the fan.

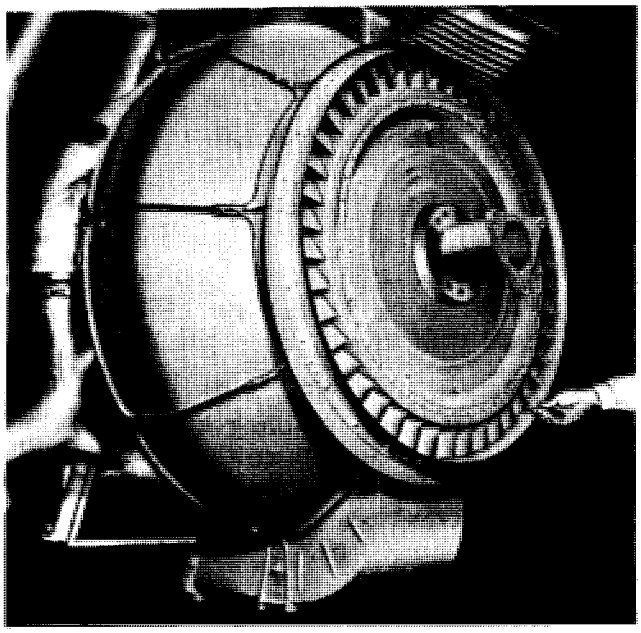

Figure 5-24. Checking Fan-to-Stator Clearance

Note

Balancing should be accomplished in a draft free room.

m. *Check fan for concentricity about its axis of rotation.* The desirable fan tolerance is 0.020 (1/64) inch. If this dimension is exceeded, install the fan and stator and check for clearance.

CAUTION

Since the fan is used as a rigging fixture for the stator, allowances must be made when shimming to compensate for the out-of-round condition of the fan assembly. Extra shims must be added to the short radius of the fan.

5-182. INSTALLATION. (See figure 5-23.)

CAUTION

Before installing the cooling fan, check the engine shaft as directed in Engine Shaft Check, paragraph 5-111.

The engine cooling fan is installed using the following procedure:

a. Coat the threads of the shaft for the fan hub retaining nut (23) with anti-seize compound, Federal Spec JAN-A-669.

b. Place the split cone (21) on the nut (23), install it in the fan hub (20), and secure with the lock ring (24).

c. Place the fan hub adapter (25) against the fan hub (20) and secure with bolts (26).

d. Completely fill the space between the thrust nut and the engine shaft with grease, Spec MIL-L-3545.

e. Apply a thin coating of the same grease to the shaft aft of the fan retaining threads *except* for the area under the cones.

Note

The cones must be kept dry and free from grease to ensure maximum friction between the mating surfaces of the cones, fan, and shaft.

f. Install the inner cone (19) on the engine drive shaft.

g. Slide the cooling fan on the engine shaft and torque the fan hub nut (23) to 1400–1600 pound-feet. Secure the fan hub nut with lock bolt (22).

h. Start the engine and run for 15 minutes. After the normal operating temperature has been reached, shut down the engine.

i. Retorque the fan. If any looseness is present, (the retaining nut moves) torque to the highest value within the torque range and then repeat the processes outlined in steps h. and i.

j. Repeat step i. after initial flight. If any looseness is present, repeat the procedure outlined in steps h. and i.

Note

If the initial flight has exceeded two hours and any appreciable looseness is discovered, the fan must be removed and the cones and shaft inspected for fretting and galling.

5-182A. CHECKING FAN STATOR CLEARANCE. (See figure 5-23.) The desirable fan-to-stator clearance for YH-21 helicopters is 0.065 –0.145 inch. This clearance is measured by inserting a feeler gage between the fan and stator.

On model H-21A, H-21B, and H-21C helicopters, the desirable clearance is 0.065–0.115 inch. When checking the fan clearance, run the feeler gage completely around the circumference of the fan as shown in figure 5-24. If the clearance is less than 0.065 inch, check for fan-to-stator contact on the first engine start. If contact is made, remove the engine cowl panels and adjust the stator as follows:

Note

This adjustment is possible only on those helicopters having the adapter and turnbuckle type stator.

a. Place a series of temporary shims (0.080 inch) between the stator ring and the fan blades to maintain a constant clearance around the fan.

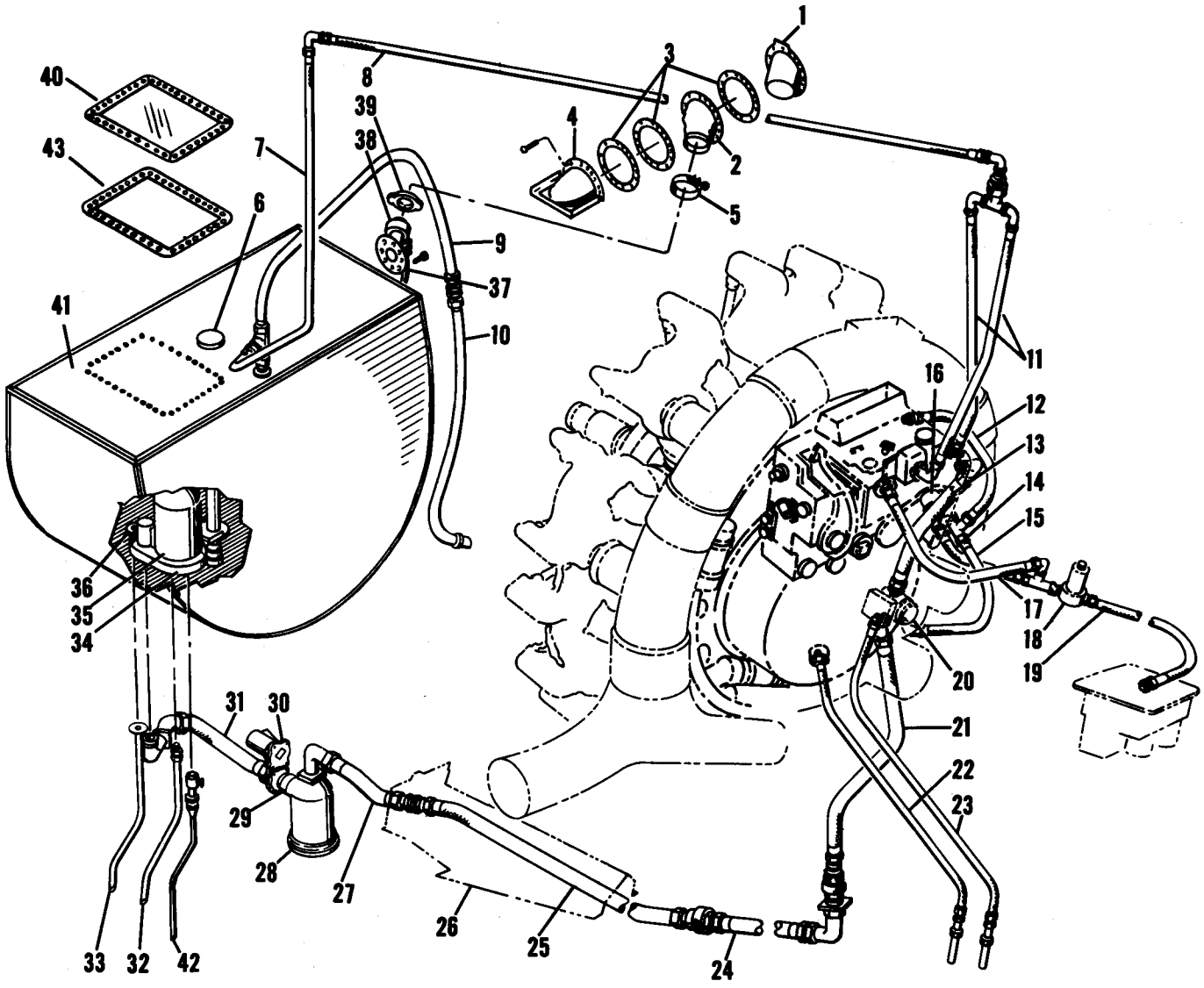

1 Guard and Door Assembly
2 Sleeve Assembly
3 Doubler
4 Closing Strip
5 Universal Clamp
6 Fuel Quantity Gage Tank Unit
7 Tube Assembly, Vapor Return
8 Tube Assembly, Vapor Return
9 Tube Assembly, Tank Vent
10 Tube Assembly, Tank Vent
11 Vapor Return Line
12 Pressure Balance
13 Fuel Line
14 Fuel Line
15 Pressure Balance Line
16 Pressure Transmitter
17 Fuel Line
18 Oil Dilution Valve, Type N-5
19 Oil Dilution Line
20 Engine Fuel Pump
21 Main Fuel Line
22 Vent Line
23 Pump Vent Line
24 Main Fuel Line
25 Main Fuel Line
26 Fuel Line Guard
27 Main Fuel Line
28 Strainer
29 Adapter
30 Shut-Off Valve
31 Main Fuel Line
32 Overflow Tube
33 Drain Tube
34 Booster Pump Chamber
35 Fuel Booster Pump
36 Drain Valve Fitting
37 Scupper Drain Tube
38 Filler Neck Assembly
39 Filler Neck Cap
40 Fuel Tank Access Door
41 Fuel Cell
42 Moistere Drain Line
43 Gasket

Figure 5-25. Power Plant Fuel System

b. Adjust the eight turnbuckles so that all play is eliminated at their attaching points without inducing tension on the turnbuckle assemblies.

c. Remove the temporary shims and tighten one turnbuckle 1/4 turn; then tighten the diametrically opposite turnbuckle 1/4 turn.

d. Repeat step c. until all turnbuckles have been tightened 1/4 turn, checking the clearance between the stator and the fan blades as each turnbuckle is tightened.

e. Repeat steps c. and d. until all turnbuckles are torqued to 20–25 pound-inches. Use a small fish scale attached to a thin bolt through the turnbuckle barrel to measure this torque.

f. Safety all turnbuckles. On the H-21B helicopters and those of the H-21A and H-21C helicopters having the disc type stator support, out-of-round condition of the stator should not exist, except for possible distortion of the inlet bellmouth. This distortion may be eliminated by reworking the inlet inner diameter to 34.10 inches and the outer diameter to 40.00 inches.

g. Replace cowling panels.

h. Before installing drive shaft between the engine and the central transmission, run the engine at idling rpm for 15 minutes and recheck torque of fan retaining nut. Recheck after first 50 hours of operation.

i. Install drive shaft.

5-183. AIR EXIT DOORS.

5-184. For details concerning the adjustable air exit doors see Fuselage, Section II.

5-185. POWER PLANT FUEL SYSTEM.

5-186. GENERAL. (See figure 5-25.) The fuel system consists of the fuel cell, fuel booster pump, shut-off valve, strainer, engine driven pump, pressure transmitter, oil dilution system, and the interconnecting lines and hose.

5-187. TROUBLESHOOTING.

Trouble	Cause	Remedy
Low fuel pressure	Defective indicator-transmitter electrical circuit	Check pressure with direct reading gage. If OK, repair or replace defective wiring or units
	Pump pressure too low	Set engine pump to 23 to 25 psi with booster pump OFF
	Cracked or dented fuel line	Replace defective line
High fuel pressure	Defective indicator-transmitter electrical circuit	Check pressure with direct reading gage. If OK, repair or replace defective wiring or units
	Clogged altitude compensator line	Remove obstruction from line
	Pump pressure too high	Set engine pump to 23 to 25 psi with booster pump OFF
	Voltage regulator set too high, causing high boost pump pressure	Adjust voltage regulator
Erratic fuel pressure	Defective indicator-transmitter electrical circuit	Check with direct reading gage. If OK, repair or replace defective wiring or units
	Dented or obstructed line	Replace defective line
	Clogged fuel cell vent line	Remove obstruction from line
No primer action	Solenoid inoperative	Check continuity of primer electrical circuit. If OK, try new solenoid
	Obstruction or leakage in primer system	Inspect system and correct as necessary
Raw fuel fumes	Fuel vapor line disconnected	Check all fuel lines
Excessive fuel coming out of pump vent line	Fuel leaking past seal	Replace pump

5-188. FUEL CELL.

5-189. DESCRIPTION. (See figure 5-25.) The fuel cell (41) is of nylon construction and is supported on all sides by the forming members of the fuel cell compartment. The fuel cell is located in a separate compartment at the aft end of the passenger cabin. The cell is attached to the structure with Waldes fasteners which prevent false fuel quantity indications due to collapsing of the cell.

5-190. REMOVAL. (See figure 5-25.) Remove the fuel cell as follows:

a. Remove the fuel cell access door (40) and gasket (43).

b. Remove the fuel quantity gage tank unit (6).

c. Remove the fuel booster pump, drains, vent lines, and disconnect the filler neck (38).

d. Remove the nut anchor rings which hold the nuts that attach the various fittings to the tank.

e. Disconnect snap fasteners.

Note

To remove the side and bottom fasteners, push in and slide forward. To remove the forward and aft fasteners, push in the slide up.

f. Collapse the cell and pull through access door.

5-191. INSTALLATION. (See figure 5-25.) Install the fuel cell as follows:

a. Vacuum clean all chips from inside of cell compartment.

b. Check the inside of the fuel cell compartment to see that all seams, sharp edges and rivet heads are covered to a minimum depth of 0.015 inch with Bridgeover compound. If this minimum depth is not held or if any sharp areas are exposed, cover the affected area with two inch wide, red, water-resistant, pressure sensitive adhesive

tape, type I, grade A, Spec JAN-P-127. Do not apply the tape to any of the areas covered by gaskets and do not cover the Waldes fasteners.

c. Install cell through the access opening. Unfold and attach to fasteners.

Note

Push in on fasteners to connect. Check lock of fasteners by pulling in all directions on the loops mounted inside the cell.

d. Wipe the inside of the cell clean of all dirt and foreign material with a clean, lint-free cloth dampened with water.

e. Install nut anchor rings.

f. Install all fittings, pump, vents, drains, and fuel quantity gage unit.

Note

Do not use sealing compound on gaskets. Check the cell to be sure that all fasteners and attaching points are secure. Failure to secure the cell properly can cause collapsing of cell, resulting in erratic operation of the fuel quantity measuring system.

g. Install access door gasket (43) and door (40).

5-192. TESTING. Pressure check the fuel cell for leaks. Apply one psi air pressure to inside of cell. Brush soap solution around all attaching fittings. Any leaks will be indicated by bubbling. If leakage occurs, disassemble fuel cell and replace gaskets.

CAUTION

Be sure that fuel cell vent lines are installed with the 45-degree angle on the lower end of the tube facing forward. This will prevent venturi action from partially collapsing the cell walls and causing false fuel quantity indications on the fuel quantity gage.

5-193. EMERGENCY REPAIR OF PLIOCEL FUEL TANK.

CAUTION

The repair procedure outlined in this section is a temporary procedure only. Cells repaired in accordance with the following procedure should not remain in use for longer than one week. All repairs must be done with internal patches.

a. Drain and remove the fuel cell as outlined in paragraph 5-190.

b. Turn the cell inside out. Carefully wash the internal surface of the cell, surrounding the area to be patched with benzine to remove all oil, grease and foreign matter.

c. Trim the defect to remove rough edges or irregularities.

d. Cut a piece of airplane fabric, Spec MIL-C-5646, grade A, so that it will overlap the area to be patched by at least one inch on all sides. Coat the patch and section to be patched with a coat of nitro-cellulose lacquer, Spec AN-L-29. Allow the lacquer to dry.

e. Apply a second coat of lacquer to both surfaces and allow to dry until tacky. Apply the patch to the defective area, smoothing the patch from the center out to avoid trapping air under the patch.

f. Apply six coats of nitro-cellulose lacquer to the entire repair, allowing each coat to dry thoroughly before applying the next coat.

g. Allow the cell to set for a minimum of two hours before handling or returning to service.

h. After patch has set, reverse the cell and apply two coats of nitro-cellulose lacquer to the external surfaces of the repaired area. Allow each coat to dry thoroughly before applying the next coat.

i. Reinstall the fuel cell as outlined in paragraph 5-191.

5-193A. DELETED.

5-193B. DELETED.

5-194. FUEL TANK CALIBRATION. For calibration of fuel quantity measuring units, see Engine and Transmission Instruments, Section VI.

5-195. ENGINE-DRIVEN FUEL PUMP.

5-196. DESCRIPTION. (See figure 5-25.) The engine-driven fuel pump (20) is mounted on the right side of the engine accessory case. The pump is adjustable and is equipped with a pump seal drain line to remove fuel and oil which collect in the cavity between the pump and its mounting pad. Internal failure of the fuel pump will be indicated by any of the following items, any or all of which require replacement of the fuel pump:

a. Engine will not idle with the fuel booster pump in the OFF position for the single-speed pump, and in the OFF or LOW position for the two-speed pump.

b. Fuel runs from the supercharger drain lines when engine is stopped, mixture is in idle cut-off and fuel booster pump is in high or low position.

c. Engine does not stop when mixture control is placed in IDLE CUT-OFF. Should this occur, turn the ignition switch off.

d. Fuel flows continuously from the engine-driven fuel pump when the fuel booster pump is turned on and the balance line is disconnected at the engine-driven fuel pump.

e. Excessive fuel observed coming out of the fuel pump vent line (23) during engine operation.

5-197. REMOVAL AND INSTALLATION. No special instructions are required to remove the engine-driven pump. Cap all lines to prevent entrance of foreign matter into the fuel system.

5-198. ADJUSTMENT. The correct operating pressure of the engine-driven fuel pump is 23 to 25 psi. All adjustments must be made with the *fuel booster pump* in the OFF position. To increase fuel pressure, turn the adjusting screw, located on the aft end of the pump, clockwise. To decrease pressure, turn screw counterclockwise.

Note

If the adjustment screw is backed-off excessively, a slight amount of fuel may appear around the edge of the screw. This does not always indicate a failure of the pump diaphragm, since the needle valve in the Idle Altitude Compensating Unit tends to allow a slight leakage of fuel into the vent line which is vented through the fuel pump. The slight amount of fuel lost due to this leakage may be considered negligible.

5-199. FUEL PUMP DRIVE SHAFT SUPPORT AND OIL SEAL.

5-200. REMOVAL. Remove the fuel pump drive shaft and oil seal as follows:

a. Remove the fuel pump and gasket.

b. Pull the fuel pump drive shaft support, using puller (Special Engine Tool) which screws into puller holes in the support. The shaft is dislocated when the support is withdrawn. Remove it carefully. Remove the gasket.

c. Remove the oil seal from the support, using puller (Special Engine Tool). To use the puller, turn the lock clockwise to release the clamps, insert the clamps through the oil seal and lock in position by turning the lock counterclockwise. Pull the seal by turning the hex nut with a wrench.

5-201. INSTALLATION. Install the fuel pump drive shaft and oil seal as follows:

a. Install a new oil seal in the fuel pump drive shaft support with the wide metal face toward the outside. Use installing tool (Special Engine Tool) which consists of a base to center the seal on the support and a plug to push it into place.

b. Lubricate the fuel pump drive shaft. Insert the straight end of tool (Special Engine Tool) in the splined end of the fuel pump drive shaft and then push the shaft and tool, tapered end first, through the shaft of the support and through the oil seal.

c. Place a gasket on the fuel pump support mounting pad. Insert the fuel pump support and shaft assembly carefully to mesh the helical gears.

d. Reinstall the fuel pump with a new gasket.

5-202. FUEL PRESSURE TRANSMITTER.

5-203. For details concerning the fuel pressure transmitter see Instruments, Section VI.

5-204. FUEL BOOSTER PUMP.

5-205. DESCRIPTION. (See figure 5-25.) The electrically operated fuel booster pump (35) is attached to the bottom of the fuel cell. When the helicopter is in operation, the fuel booster pump runs continuously, supplying sufficient pressure at the engine-driven fuel pump inlet

to prevent a vapor lock from stopping fuel flow to the engine pump. The fuel booster pump also supplies pressure for the fuel supply to the cabin heater. If the engine-driven fuel pump should fail, the fuel booster pump will deliver fuel to the engine at emergency high pressure for a limited period of time. A switch on the console provides the pilot with a means of cutting in the emergency high boost. A two-speed fuel booster pump is installed on the YH-21, H-21A, and some H-21B[37] and H-21C[37] helicopters. A single-speed fuel booster pump is installed on later H-21B[38] and H-21C[38] helicopters.

5-206. REMOVAL. (See figure 5-25.) Remove the pump as follows:

CAUTION

Since it is necessary to work underneath the helicopter when removing the fuel booster pump, a fan or blower should be placed so that any fuel vapors will be dispersed while work is in progress. Prolonged exposure to the fuel vapors should be avoided.

a. Drain the fuel cell.

b. Disconnect fuel line (31), overflow tube (32) and moisture drain line (42) at the fuel booster pump.

c. Disconnect the electrical leads.

d. Remove the pump.

5-207. INSTALLATION. To install the fuel booster pump, reverse the removal procedure. Check for leaks and replace gasket if necessary. Assemble all tubes and hose fitting connections with anti-seize compound, Spec JAN-A-669.

CAUTION

Do not allow compound to get inside lines and hose.

5-208. ADJUSTMENT. There are no provisions for adjusting the fuel booster pump. The two-speed fuel booster pump operating pressures are 11 psi when the switch is in the LOW position and 18 psi when the switch is in the HIGH position. The single-speed fuel booster pump operating pressure is 18 psi.

Note

In the event of a failure of the engine-driven fuel pump, use the two-speed fuel booster pump in the HIGH position or the single-speed fuel booster pump in the ON position.

5-209. FUEL SHUT-OFF VALVE.

5-210. DESCRIPTION. (See figure 5-25.) The electrically operated fuel shut-off valve (30) is positioned in the system between the fuel booster pump and the fuel strainer. It is located under the fuel cell and is accessible through the opening for access to the fuel strainer.

5-211. REMOVAL. Remove the shut-off valve as follows:

a. Drain the fuel cell.

b. Break the electrical connection to the valve.

c. Remove the eight bolts attaching the valve to the fuel line adapters.

d. Remove the valve.

5-212. INSTALLATION. To install the valve, reverse the removal procedure.

5-213. FUEL STRAINER.

5-214. DESCRIPTION. (See figure 5-25.) The fuel strainer (28) is positioned in the system between the shut-off valve and the engine-driven fuel pump. The strainer is located under the fuel cell and is accessible through an opening provided in the fuselage bottom. The unit is equipped with a drain valve for removing accumulated water from the fuel system.

5-215. REMOVAL. Remove the strainer as follows:

a. Turn the fuel shut-off valve OFF.

b. Drain the strainer and fuel line to the engine.

c. Break the fuel line connections to the strainer.

d. Remove the strainer.

5-216. INSTALLATION. To install the strainer, reverse the removal procedure. Check the plug on the bottom of the strainer for proper safety. If it does not have a safetying hole, replace the plug with an AN814-4DL plug, making sure that the gasket is still in place. Run the lock wire from the plug over the drain valve and around the body of the strainer back to the other side of the plug.

5-217. OIL DILUTION.

5-218. DESCRIPTION. (See figure 5-25.) The oil dilution system consists of an electrically operated shut-off valve (18) and the connecting line (19) to the oil tank.

5-219. OPERATION. Oil dilution is normally accomplished before shutting down the engine when operation in cold weather is anticipated. To dilute engine oil, place the oil dilution switch in the ON position. This allows fuel to flow into the diverter-segregator valve where it mixes with oil

[37] Ser No. 51-15854 thru 53-4402.

[38] Ser No. 54-4000 and subsequent.

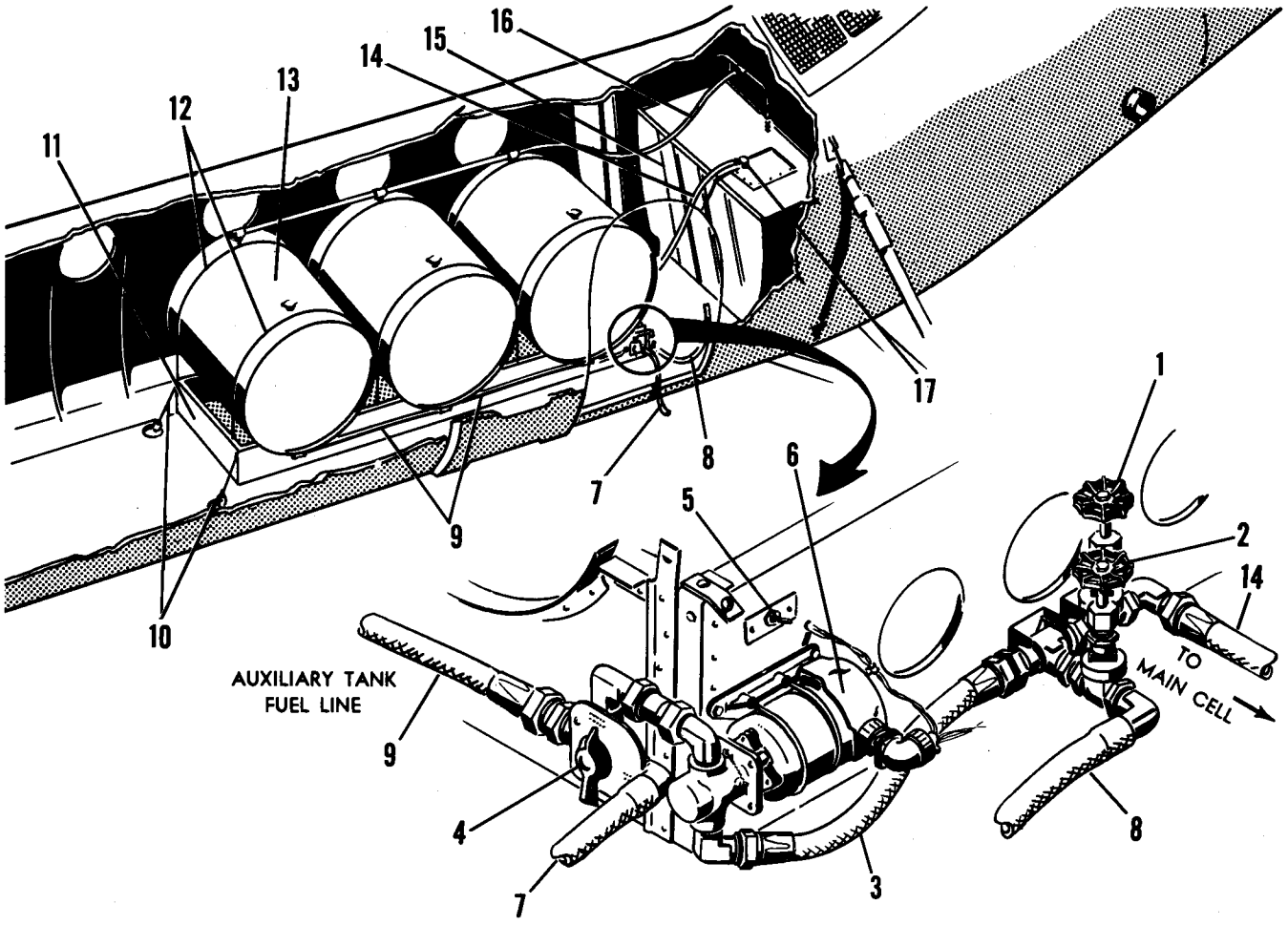

1 Flow Control Valve
2 Auxilary Tank Drain Valve
3 Pump-to-Flow Control Valve Line
4 Selector Valve
5 Fuel Pump Switch
6 Fuel Pump
7 Auxiliary Tank Drain Line
8 Ground Refuel Line
9 Auxiliary Fuel Lines
10 Cradle Tie-Down Straps
11 Tank Cradle
12 Tank Retaining Straps
13 Auxiliary Fuel Tanks
14 Flow Control Valve-to-Main Cell Line
15 Main Cell
16 Auxiliary Tank Vent Line
17 Main Cell Fitting

Figure 5-26. Internal Auxiliary Fuel System

from the oil tank. At the same time, the cool fuel flowing over the thermostatic unit in the valve causes this unit to contract, thus shutting off the oil return to the main tank and diverting flow to the tank hopper. For information on time and percentage of oil dilution, refer to Section I.

5-219A. INTERNAL AUXILIARY FUEL SYSTEM.

5-219B. DESCRIPTION. (See figure 5-26.) A C-47 aircraft type internal auxiliary fuel system can be installed on all H-21 helicopters for extended range missions, ferrying purposes, or transporting fuel. The installation is an almost completely self-contained unit consisting of a metal cradle upon which is mounted three 100-gallon tanks, an electrically driven reversible fuel pump, two-way toggle switch, fuel lines, and cradle mounting cables. The fuel lines for attaching the auxiliary fuel system to the main fuel system can be made up at installation.

5-219C. INSTALLATION. The tanks must be removed from the cradle assembly so that the assembly will be able to fit through the cabin door.

Note

Make sure that the bonding jumpers attached from the tank sumps to the cradle are disconnected before removing the tanks.

The auxiliary fuel system is then installed as follows:

a. Place the cradle assembly inside the fuselage so that the aft end, mounting the fuel pump, measures approximately 32 inches from the frame

at station 359.800 on H-21B and H-21C helicopters. The cradle is placed closer to station 359.800 on the YH-21 and H-21A helicopters because the location of the tie-down fittings on the floor are different than those on the H-21B and H-21C helicopters. The forward mounting cables are fastened to tie-down rings in the floor of the YH-21 and H-21A helicopters and are fastened to tie-down rings on each cove at station 219.500 on H-21B and H-21C helicopters. The two AN130 turnbuckle assemblies inside the cradle assembly are secured to tie-down rings in the floor. The aft mounting cables are fastened to tie-down rings in the floor on YH-21 and H-21A helicopters and to the tie-down rings on the RH cove and floor at station 339.500 on the H-21B and H-21C helicopters. Tension all turnbuckles until the cradle assembly is firmly secured. Ground the cradle by attaching a bonding jumper from the cradle to the fuselage.

b. Install the fuel tanks in the cradle and secure the tank restraining straps. Connect the vent, fuel supply lines, and the bonding jumpers from the tank sumps to the cradle as each tank is installed.

c. Install a pump vent line, made of metal tubing, from the pump to the aft corner of the cabin door frame and vented to the outside. Secure this vent line by clamping it to the metal strip across the bottom of the door frame.

d. Remove the main fuel cell vent line on the top of the fuel cell compartment and install a modified vent line which will have an AN938-16D T-fitting located between the bend of the tubing and the fitting attached to the vent fitting on the fuel cell. Connect a metal tube (16), beaded at one end and an AN fitting on the other end, to an AN893-16D-12 expander fitting in the T-fitting. Connect the beaded end of the tube to the auxiliary tank vent line with a piece of hose. Secure the metal tube by clamping it to the bulkhead at station 359.800.

e. Remove the main fuel cell access door.

CAUTION

It is recommended that the battery be disconnected and no external power units be in the vicinity of the helicopter when the access door is removed. The interior of the fuel cell compartment should be well ventilated while the door is removed.

Drill a 1-11/32 inch hole in the forward right hand corner of the fuel cell access door and install an AN833-16D bulkhead elbow fitting (17). Replace the access door and properly secure it.

f. Install a flexible hose assembly (14) from the fuel flow control valve (1) on the cradle to the bulkhead elbow fitting. Secure the hose assembly by clamping it to the floor and to the fuel cell compartment structure.

g. Install two flexible hose assemblies (7 and 8), with attachment fittings at one end long enough to be inserted into a 55-gallon drum on the ground, to the fitting at the selector valve (4) and to the fitting on the drain and refueling line valve (2). Large hose clamps can be installed on both sides of the cabin door jamb into which the hoses can be inserted to be out of the way when not in use.

h. Install an MS25017-20 circuit breaker in one of the openings provided for additional circuit breakers on the upper circuit breaker level of the aft distribution box. Connect the circuit breaker to the bus with a clip. Connect the terminal of the electrical cable from the fuel pump two-way toggle switch (5) to the terminal of the circuit breaker.

5-219D. REMOVAL. The removal of the auxiliary fuel system is the reverse of the installation with the following exceptions:

a. The bulkhead elbow fitting need not be removed from the main fuel cell access door but a fume-tight and leak-proof cap must be installed on the elbow.

b. If the modified main fuel system vent line is to remain installed on the helicopter, a fume-tight and leak-proof cap must be installed on the expander fitting.

5-219E. SERVICING. The auxiliary fuel tanks can be serviced by two methods:

a. The tanks can be filled from a refueling truck through the filler necks.

CAUTION

Make sure that the fuel flow and drain valves are turned off, and ground the

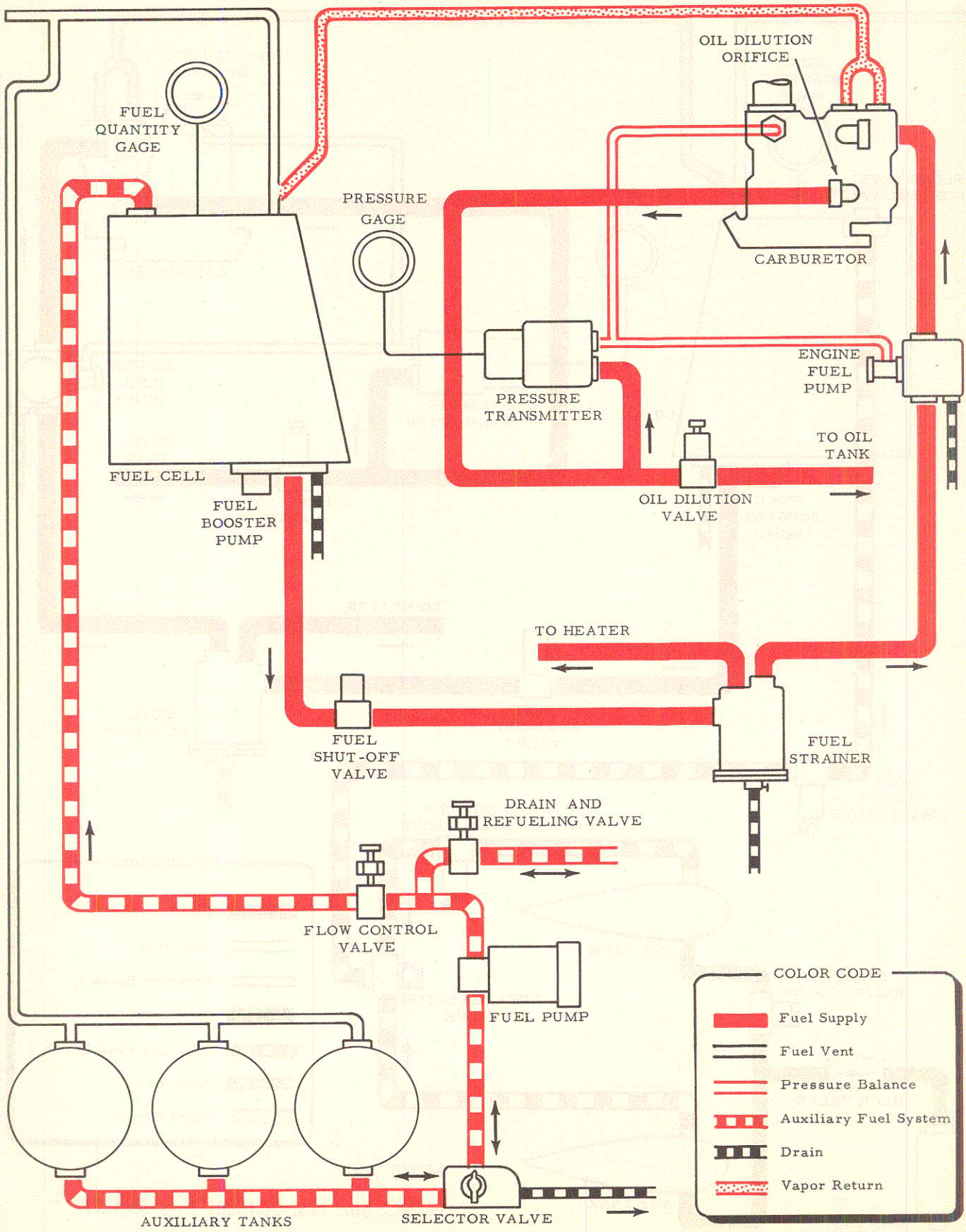

Figure 5-27. Fuel System Schematic—YH-21, H-21A

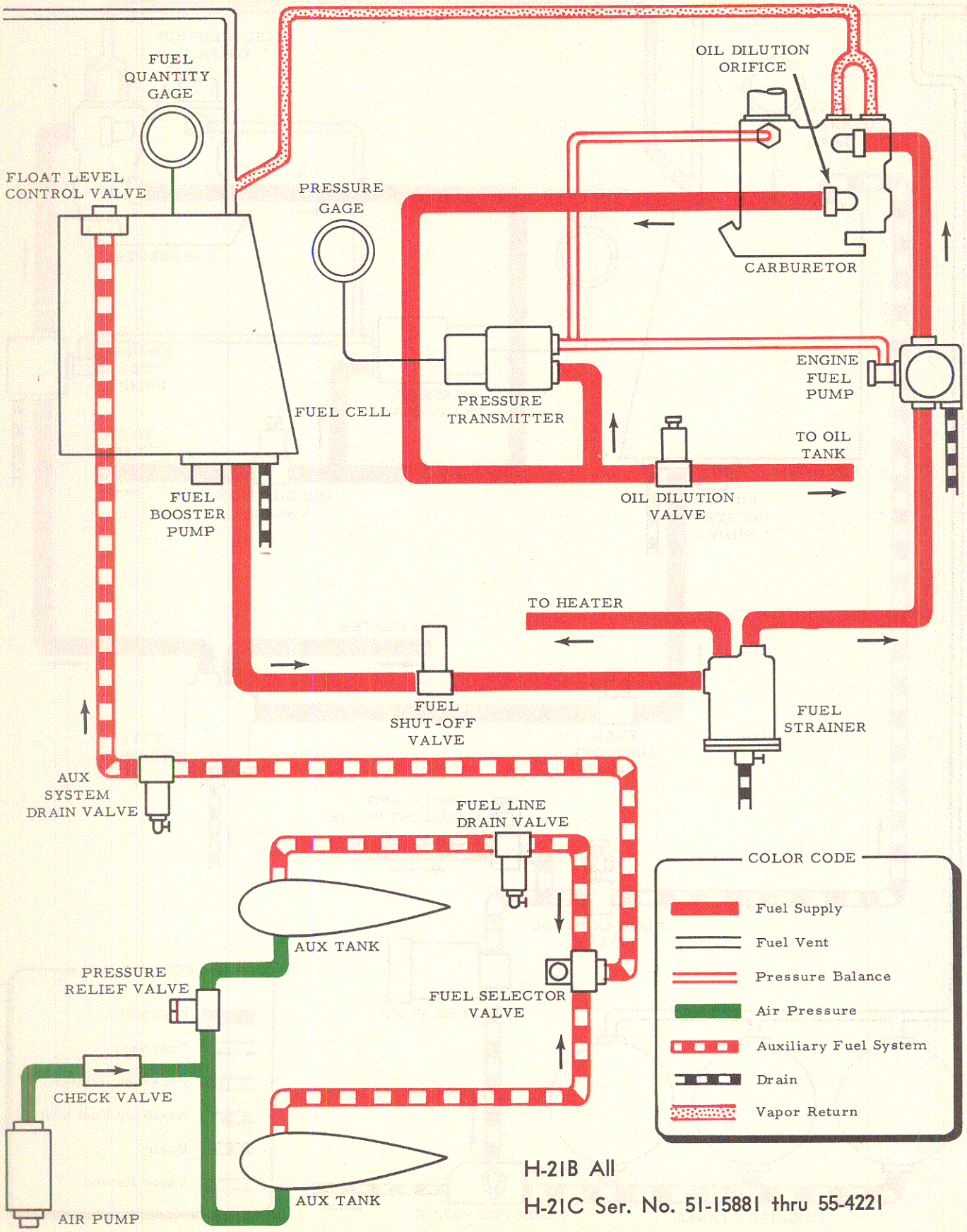

H-21B All

H-21C Ser. No. 51-15881 thru 55-4221

Figure 5-27A. Fuel System Schematic—H-21B, H-21C

1 Float Level Control Valve
2 Fuel Cell Hose Assembly
3 Tank Fitting
4 Hose Assembly
5 System Drain Valve
6 Hose Assembly
7 Hose Assembly
8 Left Hand Air Line
9 Tank Fittings
10 Spring
11 Washer
12 Left Hand Fuel Line
13 Fuel Selector Valve
14 Right Hand Fuel Line Section
15 Air Pressure Pump
16 Fuel Line Drain Valve
17 Support Bracket
18 Check Valve
19 Right Hand Fuel Line Section
20 Pressure Relief Valve
21 Right Hand Air Line Sections
22 Pressure Line

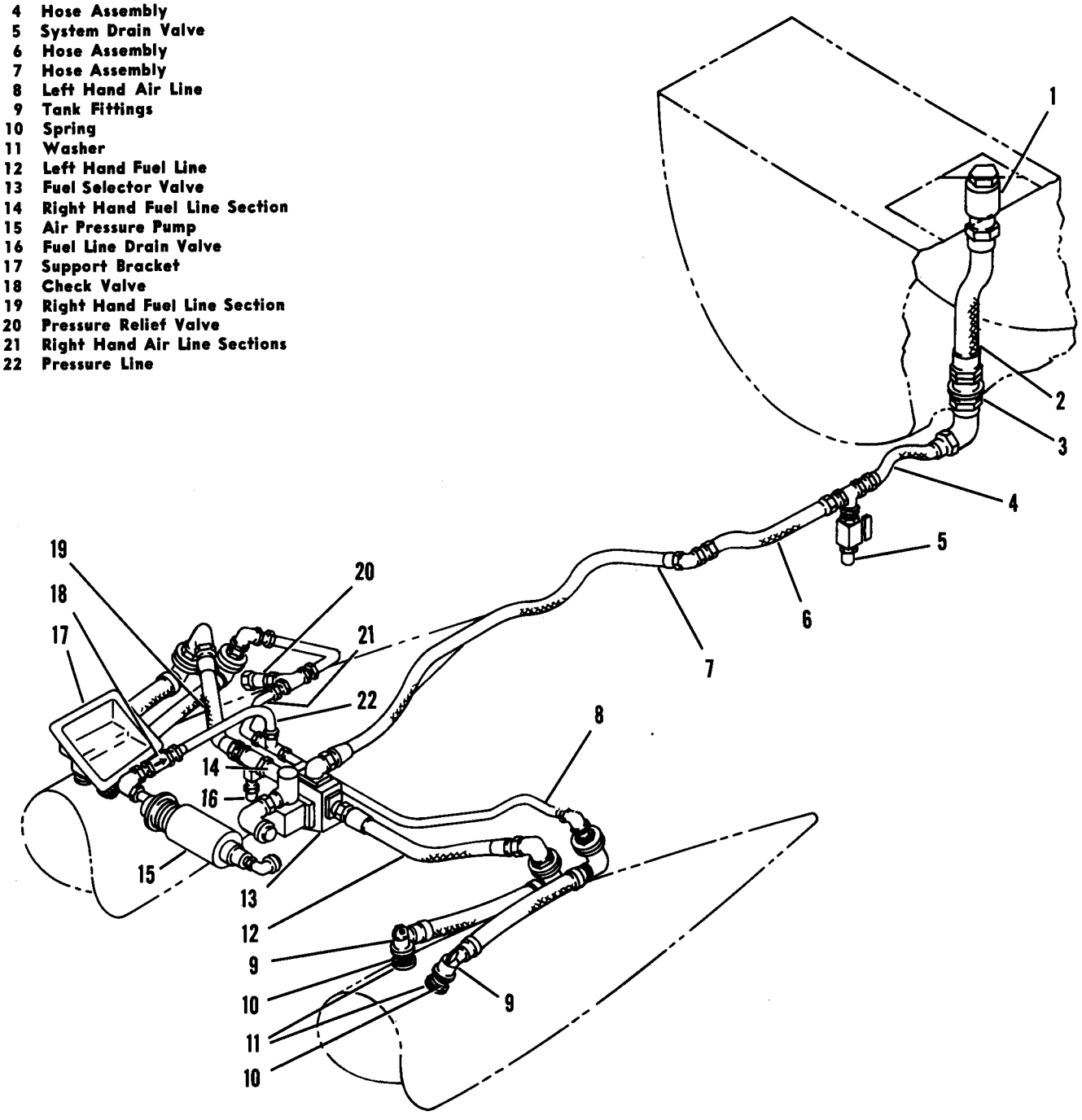

Figure 5-28. Auxiliary Fuel System—H-21B, H-21C

nozzle of the refueling hose to the ground connection on the cradle.

The auxiliary fuel tanks should be fueled in the following sequence:

1. Fill the two forward tanks to approximately three-quarter capacity.
2. Fill the aft tank to capacity.
3. Allow the fuel in the three tanks to attain a common level.
4. Top off the aft tank only.

Note

Under no circumstances should the two forward tanks ever be topped off since this will cause the fuel level to rise into the vent line.

b. The tanks can be filled from 55-gallon drums by inserting the flexible hose (8) into the drum and opening the drain and refueling line valve (2). Energize the pump in reverse by placing the toggle switch in reverse or REFUELING position. Make sure the selector valve (4) is in the AUX TANK-TO-MAIN position.

CAUTION

The auxiliary fuel tank system must be checked for leaks after initial installation before the fuel pump is operated. The fuel flow valve must be turned off when the pump is reversed for refueling.

Always close the drain line valve (2) before stopping the pump.

5-219F. OPERATION. Transferring of fuel to the main fuel cell is accomplished as follows:

a. Check to see if the fuel level in the main fuel cell is low enough to accommodate the additional fuel from the auxiliary tanks.

b. Make sure the selector valve (4) is in the AUX TANK-TO-MAIN position and the drain and refueling line valve (2) is turned off.

c. Open the fuel flow valve (1).

d. Energize the fuel pump by placing the toggle switch to the ON position and transfer the quantity of fuel desired.

5-219G. DRAINING THE INTERNAL AUXILIARY TANKS. The auxiliary internal fuel tanks can be drained by either of the two following methods:

a. To drain the tanks by *gravity,* insert the flexible hose (7) into a drum or container on the ground and turn the selector valve to the GROUND REFUEL position.

b. To drain the tanks by *pressure,* insert the end of the flexible hose (8) into a drum or container on the ground, and with the selector valve in the AUX TANK-TO-MAIN position, open the drain and refueling line valve (2) and energize the fuel pump.

5-220. AUXILIARY FUEL SYSTEM — H-21B, H-21C.

5-221. DESCRIPTION. (See figures 5-28 and 5-29.) The H-21B and H-21C helicopters are equipped to permit installation of two external 165-gallon fuel tanks. All operating components, tubing, tank supports, and hardware necessary to complete the installation are provided in kit form. The pump and selector valve are housed in a fume-tight box located just forward of the main entrance door beneath the cabin floor. Access to these units may be gained by lifting a removable panel in the floor. The pump is a constant pressure, electrically driven air pump which constantly pressurizes the external tanks, causing fuel to flow to the main cell when the selector valve is opened. The air pump operates whenever the tank selector valve is on. A float level control valve in the main fuel cell regulates the amount of the fuel transferred. When fuel is not being pumped, air pressure is relieved through a pressure relief valve which vents through the fuselage skin. The selector valve is a four-position valve which permits selection of fuel from either the left or right auxiliary tank or from both. The valve is electrically controlled from the overhead switch panel. In the event of an electrical failure in the selector valve circuit, the valve may be operated manually. To operate manually, remove the cover from the fume tight box, release the pin lock to the actuator, and rotate the actuator to the desired tank position. On helicopters having short wires to the actuator, it will be necessary to remove the electrical connector from the valve assembly so that the actuator may be rotated to all positions. In the event of an emergency condition arising in flight necessitating jettisoning of the auxiliary tanks, the tanks may be jettisoned by placing the jettison switch on the overhead switch panel in the JETTISON position. In the event of an electrical failure in the jettison circuit, an emergency manual release system is provided. This system is actuated by pulling the handle in the side of the pilot's collective pitch lever housing.

5-222. INSTALLATION — AUXILIARY FUEL LINES AND ACCESSORIES. (See figure 5-28.) Install the lines and accessories of the auxiliary fuel kit as follows:

a. Drain and purge the main fuel cell.

b. Remove the access panel on the top of the fuel cell enclosure.

c. Remove the cover plate from the opening in the bottom of the fuel cell and install the tank fitting (3).

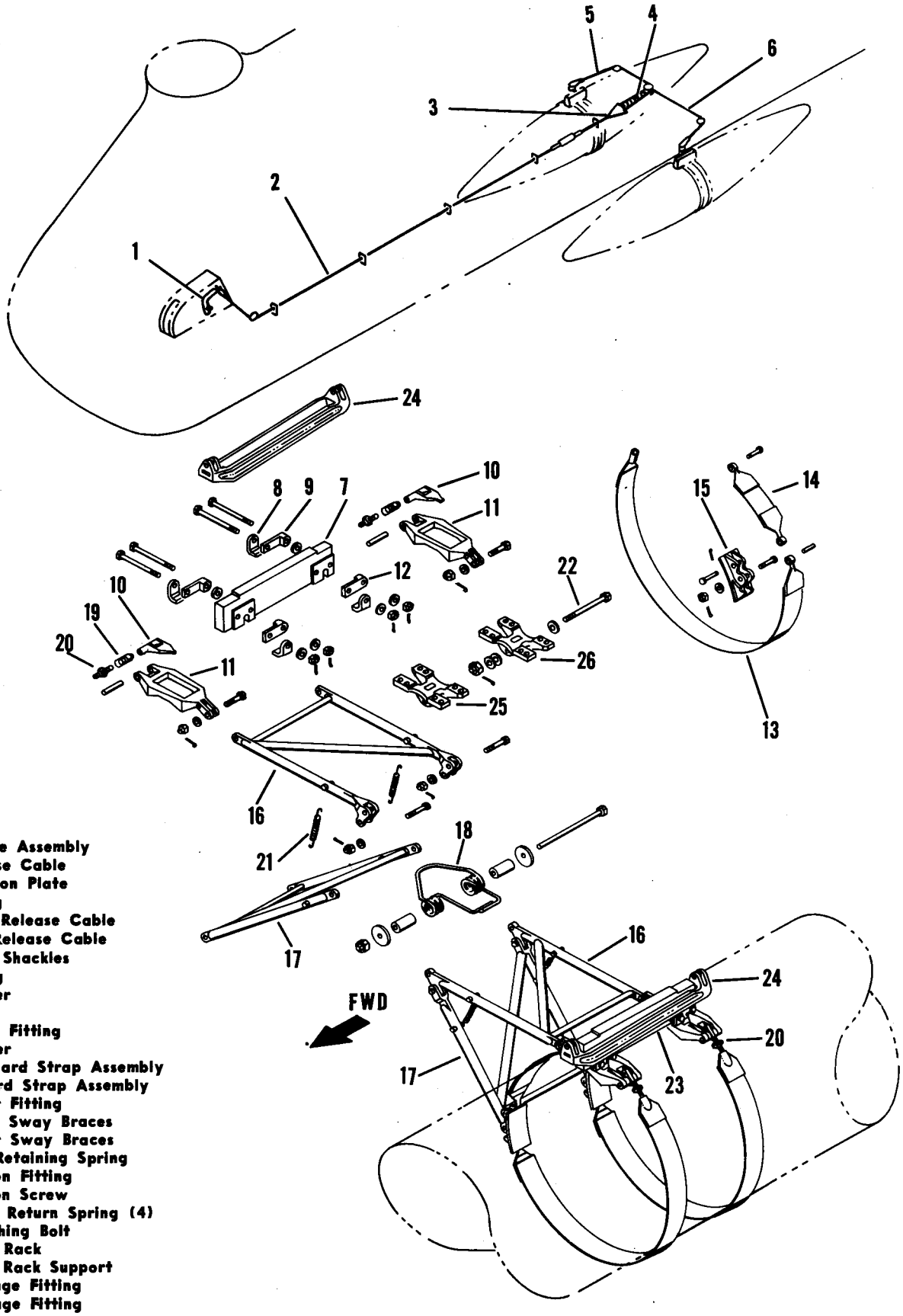

1 Handle Assembly
2 Release Cable
3 Junction Plate
4 Spring
5 Right Release Cable
6 Left Release Cable
7 Bomb Shackles
8 Fitting
9 Washer
10 Hook
11 Upper Fitting
12 Washer
13 Outboard Strap Assembly
14 Inboard Strap Assembly
15 Lower Fitting
16 Upper Sway Braces
17 Lower Sway Braces
18 Coil Retaining Spring
19 Tension Fitting
20 Tension Screw
21 Brace Return Spring (4)
22 Attaching Bolt
23 Bomb Rack
24 Bomb Rack Support
25 Fuselage Fitting
26 Fuselage Fitting

Figure 5-29. Auxiliary and External Fuel Tank Supports and Releases

d. Coat the male threads of the fuel cell hose assembly (2) with anti-seize compound, Spec MIL-L-6032, and install the hose assembly in the cell.

CAUTION

If it becomes necessary to climb into the fuel cell, remove shoes and empty pockets of any sharp objects which might puncture the fuel cell.

e. Raise the floor panels over the fume-tight boxes and remove the bottom panel from the forward box.

f. Install the pump (15) on the pump mounting bracket and secure with four bolts.

g. Raise the selector valve (13) until the flange on the elbow is against the bottom of the mounting bracket. Secure the valve in position with four screws.

h. Connect the pump and selector valve electrical circuits.

i. Remove the covers from the fuel and air line connections on the fuselage skin. Install the fuel and air line elbows.

j. Install the left hand fuel and air lines (12 and 8). Connect the fuel line to the left hand port of the selector valve.

Note

Coat all male threads of tube and hose fittings with anti-seize compound, Spec MIL-L-6032. Remove excess compound, and allow no compound to enter fuel passages.

k. Install a tee on the bracket which is located just aft of station 292.90. The tee should be installed with the mounting arm of the bracket between the shoulder of the tee and the lock nut.

l. Attach the pump pressure relief valve (20) and fitting to the tee. Clamp the valve to the mounting bracket.

m. Install the right hand air line sections (21).

n. Install the right hand fuel line sections (14 and 19), drain valve (16), and drain tube. The drain valve should be installed so that the head of the valve will protrude through the adapter in the fuselage skin. Connect the fuel line to the right hand port of the selector valve.

o. Install the elbow and check valve (18) on the pump. Install the pump pressure line (22) and connect it to the right hand and left hand air lines.

CAUTION

Install the check valve with the free-flow arrow pointing away from the pump.

p. Install the hose assemblies (4, 6, and 7) and the system drain valve.

q. Ground the air pressure lines to the fuselage structure.

r. Pressure test the system by plugging all lines and, with the selector valve in the BOTH position, applying air at 35 psi. Hold this pressure for 20 minutes. If pressure does not drop below 30 psi, the system may be considered satisfactory.

s. Install the float level control valve (1) in the removable panel in the top of the fuel cell. Connect the fuel cell hose assembly (2) to the fitting on the bottom of the float level control valve.

t. Replace the removable panel, and access panel.

u. Replace the top panel on the fume-tight box and secure the panel to the box.

v. Apply sealing compound, Spec MIL-S-7502, class C, type II, around all grommets and tube and hose assemblies and around all edges of the fume-tight box.

w. Replace the floor panels.

x. Install the hose support brackets (17) on the fuselage skin. Install elbows in the fuel and air outlets.

y. Install the fuel and air hose. Insert the tank fittings (9) into the hose and clamp them in place.

z. Attach the fittings to the support brackets.

aa. Install the washer (11) and spring (10) on the tank fittings. Compress the spring and temporarily safety wire the washer to the fitting collar. This safety wire must be removed when auxiliary tanks are installed.

5-223. REMOVAL—AUXILIARY FUEL LINES AND ACCESSORIES. To remove the lines and accessories of the auxiliary fuel kit, reverse the installation procedure.

5-224. INSTALLATION — EMERGENCY RELEASE SYSTEM. (See figure 5-29.) Install the auxiliary tank emergency release system as follows:

a. Install the handle assembly (1) on the collective pitch lever housing.

b. Install the fairlead assembly on the cockpit bulkhead.

c. Raise the cabin floor sections. Attach the end fitting of the release cable (2) to the handle assembly, and thread the cable through the fairlead and under the cabin floor.

d. Attach the aft end of the cable fitting to the junction plate (3) and install spring (4). The extended length of spring (4) when installed should be 5.39 ±0.24 inch measured to the inside loops.

e. Fix the junction plate (3) and the manual release levers of the bomb shackles so that they will not move, and install the left and right release cables (5 and 6). Tighten the turnbuckles of these cable assemblies until there is 25 ±2 pounds tension in each cable.

f. Rotate the turnbuckles of left and right release cables (5 and 6) three full turns to loosen the cables.

g. Lockwire all turnbuckles.

Note

Stowage pins are located at station 266.06 for stowing of the emergency release cables if the bomb shackles are removed.

5-225. REMOVAL — EMERGENCY RELEASE SYSTEM. To remove the emergency release system, reverse the installation procedure.

5-226. INSTALLATION — AUXILIARY FUEL TANK SUPPORTS. (See figure 5-29.) The auxiliary fuel tank supports are installed as follows:

a. Assemble the bomb rack (23) and bomb rack support (24), including fitting (8) and washer (9). Do not secure the fitting (8) at this time.

b. Install bomb rack on helicopter.

c. Install fitting (25 and 26) on bottom of fuselage.

d. Attach the upper sway braces (16) and the coil retaining spring (18) to the fittings (25 and 26). The spring should be installed with the coils facing down.

e. Attach the lower sway braces (17) to the upper sway braces (16) with hardware.

f. Install the four brace return springs (21).

g. Install the lower fittings (15) on the lower sway braces (17).

5-227. REMOVAL—AUXILIARY FUEL TANK SUPPORTS. To remove the auxiliary fuel tank supports, reverse the installation procedure.

5-227A. FUNCTIONAL CHECK PRIOR TO INSTALLING AUXILIARY FUEL TANKS. The complete system may be functionally checked prior to the tank installation, using the following procedure:

a. Check the operation of the air pump and the selector valve, both electrically and manually.

b. Check the auxiliary tank release mechanism electrically by placing the switch in the JETTISON position. Observe for proper operation of the bomb shackles.

Note

Bomb shackles may be checked electrically without being attached to the helicopter.

c. Check the operation of the float level valve as follows:

1. Connect a piece of 1-inch diameter hose between the air line and fuel line located on the outside of the fuselage and secure the hose with clamps.
2. Start the air pump to determine if the float valve is *open*. If open, air will come through the float valve and empty through the vent line.

Note

The main fuel tank should be empty or half full when checking operation of the float valve for opening.

3. Fill the main fuel tank to capacity and start the air pump. Check for the float valve *closing*. If the valve is operating properly, no air will come through.

d. When the check is concluded and the system is operating properly, remove the piece of hose and clamps installed in step 1.

5-228. INSTALLATION — AUXILIARY FUEL TANKS. The auxiliary fuel system is designed to accommodate either the Fletcher Aviation Corporation ST2-165-0000 tanks or the Beech Aircraft Corporation 211-0000 tanks. However, before the Beech tanks can be installed, it is necessary to replace tank fittings as outlined in steps k. through n. To install the tanks, proceed as follows:

Note

It is recommended that the tanks be checked for leaks prior to installation.

a. Place the upper fittings (11) on the tank with the hook (10) facing outboard.

b. Raise the tank into position and attach to the bomb rack (23) by inserting the tongs on the bomb rack under the fitting attached to the tank. This may be accomplished by pulling the ring, located on top of the bomb rack, forward.

Note

Make certain that the tang on the hook (10) is secured under the washer (9). If the tang is not under the washer, rotate the tank inboard to facilitate placing the tang properly.

c. Install the fuel and air pressure quick-disconnect fittings on to the tank and connect them to the fuselage fittings. Attach the hose lines.

d. Attach the inboard strap assembly (14) to the lower fitting (15) and attach top of strap to the upper fitting (11).

e. Bolt the upper fitting (11) to the upper sway brace (16).

f. Attach the outboard strap assembly (13) to the lower fitting (15) and to the hook (10) with tension screw (20).

g. Tighten the tension screws (20) to a torque of 65 pound-inches. The ends of the screws must obstruct the small holes in the end fitting on the strap (13) and tension fitting (19). Secure the tension screws (20) with lock wire.

h. Secure the fitting (8), first being certain that it is in position against the tank.

i. Attach the release cables (5 and 6) to the manual release levers of the bomb shackles (7) as outlined in paragraph 5-224, steps e., f., and g.

j. Remove the lock wire from the fuel and air pressure quick-disconnect fittings which secures the washer and spring to the collar on the tank fittings.

Note

The washer and spring will fall free if the auxiliary tanks are jettisoned.

k. If a *Beech tank* is being installed, remove the fuel fitting (BJ-5002-1, Beech Aircraft Corp) and the air fitting (BJ-5002-1/2, Beech Aircraft Corp).

l. Install a special bushing (SP4348112, Fletcher Aviation Corp) in the fuel outlet opening.

m. Install a special adapter nut (SP434829, Fletcher Aviation Corp) in both the fuel outlet and air inlet openings.

n. Proceed as outlined in paragraphs a. through j. to install the tank on the helicopter.

5-228A. REMOVAL—AUXILIARY FUEL TANKS. Removal of the auxiliary fuel tanks is the reverse of the installation procedure.

5-228B. EXTERNAL FUEL SYSTEM.

5-228C. GENERAL. (See figure 5-30.) An external fuel system is installed on certain H-21 helicopters[40], incorporating self-sealing external fuel tanks to be used in lieu of the main internal fuel cell. The system consists of *two* external, self-sealing tanks, four fuel-booster pumps, (two in each tank), an electrically operated tank selector valve, a hydraulic motor-driven fuel pump, a manually operated selector valve, a fuel shut-off valve, lines, and components to tie the external lines into the main fuel system. Controls for the system are located on the overhead panel in the cockpit.

When only the external tanks are to be used, the manually operated valve, installed in the vapor return line just above the main tank, must be placed in the EXTERNAL tank position and safetied. The main fuel tank switch must be placed in the OFF position, thus closing the fuel shut-off valve to the main tank. The main tank should also be drained, purged, and the vents sealed.

5-228D. EXTERNAL SELF-SEALING FUEL TANKS.

5-228E. DESCRIPTION. (See figure 5-30.) Each external fuel tank is a self-sealing unit having a fuel capacity of 125 gallons. It is equipped with two electrically actuated booster pumps and a transistorized fuel gage tank unit. Two access panels on the top of the tank allow for removal and installation of the tank components.

5-228F. REMOVAL. The tank may be removed using the following procedure:

a. Drain and purge the tank.

b. Disconnect the electrical connections.

c. Support the tank and operate the release mechanism to release the tank from its mounting.

CAUTION

Restrain the support straps to prevent them from flying out and striking anyone when the tank is released.

5-228G. INSTALLATION. The self-sealing fuel tank is installed in the same manner as the auxiliary fuel tank described previously in this section.

5-228H. SELECTOR VALVE.

5-228I. DESCRIPTION. The selector valve is mounted in a fume-tight box located under the cabin floor. It is normally operated with a control located on the overhead panel, however, it may also be operated in an emergency by depressing the spring-loaded release mechanism, located between the body of the motor and the selector valve, and rotating the valve head manually.

5-228J. REMOVAL. The selector valve may be removed by using the following procedure:

a. Place the fuel shut-off valves in the CLOSED position.

b. Drain the fuel lines and disconnect the fittings from the valve. Remove the electrical connections.

c. Remove the mounting bolts and lift the valve out of the fume-tight box.

5-228K. INSTALLATION. Installation of the selector valve is the reverse of the removal procedure.

[40] Ser No. 56-2015 and subsequent.

1 Vapor Return Line
2 Vapor Return Selector Valve
3 Tank Vent
4 Fuel Quantity Tank Unit
5 Drain Valve
6 Drain Line
7 Fuel Booster Pump
8 Main Fuel Tank
9 Check Valve
10 Shut-Off Valve
11 Fuel Strainer
12 Fume Proof Box
13 Fuel Pump
14 Hydraulic Motor
15 Hydraulic Line
16 Fuel Line
17 Bonding Jumper
18 Tank Selector Valve
19 External Fuel Tank
20 Quick Release Fuel Fittings
21 Fuel Filler Cap

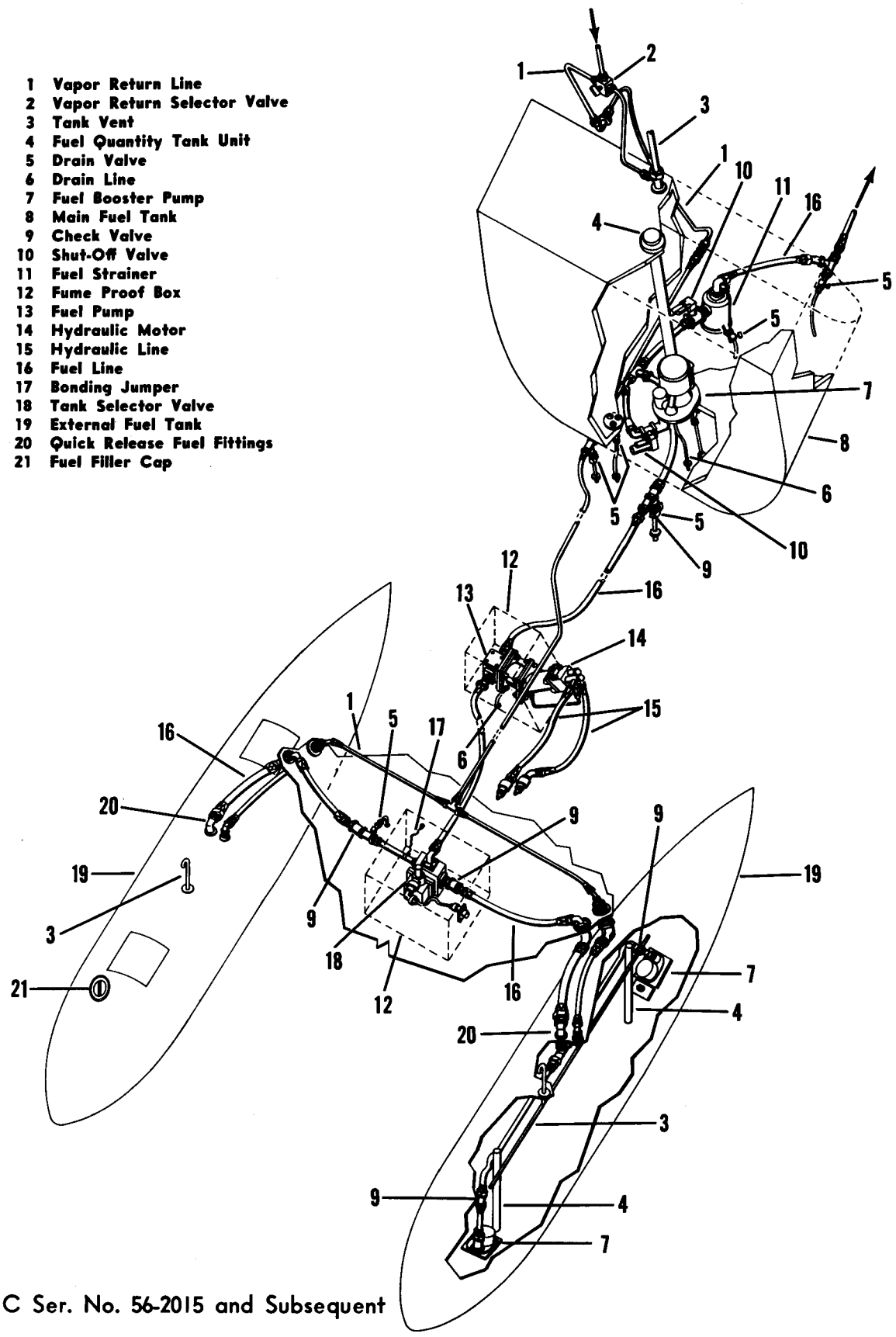

H-21C Ser. No. 56-2015 and Subsequent

Figure 5-30. External Fuel System

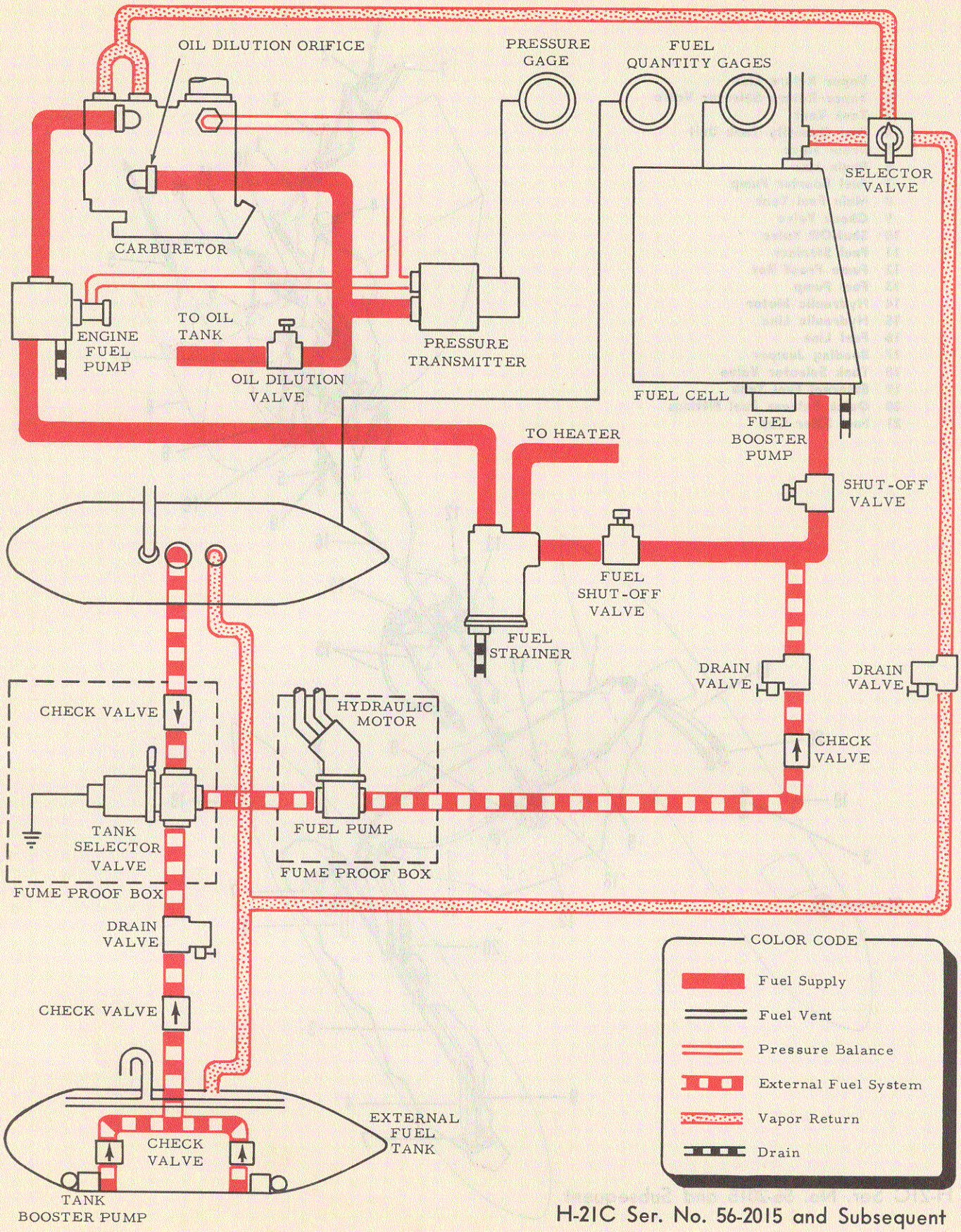

H-21C Ser. No. 56-2015 and Subsequent

Figure 5-30A. External Fuel System Schematic

5-228L. HYDRAULIC MOTOR-DRIVEN FUEL PUMP.

5-228M. DESCRIPTION. (See figure 5-30A.) The fuel pump is mounted in a fume-tight box under the cabin floor and is driven by a piston type hydraulic motor operated from the hoist hydraulic system. The pump operates whenever the tank selector switch is turned to either or both of the external tank positions.

5-228N. REMOVAL. The hydraulic motor-driven fuel pump may be removed by using the following procedure:

a. Remove the pressure from the hydraulic system.

b. Disconnect and cap the hydraulic lines leading from the pump.

c. Remove the bolts which secure the pump and lift the pump out of the fume-tight box.

5-228O. INSTALLATION. Installation of the hydraulic motor-driven fuel pump is the reverse of the removal procedure.

5-229. POWER PLANT LUBRICATION SYSTEM.

5-230. GENERAL. (See figures 5-31 and 5-31A.) The power plant lubrication system of the H-21 series helicopters consists of two primary systems which are the hopper system and the main oil system. The hopper system provides diluted oil for engine operation at low temperatures until oil in the main supply section has become sufficiently decongealed to permit flow. Flow control from the hopper or from the main supply section is governed by a diverter-segregator valve assembly mounted on the oil tank sump. When the engine is started, diluted oil flows from the hopper, through the diverter-segregator valve to the engine oil pump located on the accessory section of the engine. The pump delivers the oil under pressure to the engine. Oil pressure may be regulated by adjusting the oil pressure relief valve located in the oil pump housing. After the engine is lubricated, oil drains from the engine into the engine sump where it is pumped, by scavenge pumps in the forward and the rear sumps, through an external scavenge line to the oil cooler. A thermostatic valve in the oil cooler routes the oil directly to the oil tank or through the oil cooler, depending on the oil temperature. From the oil cooler, engine oil returns to the oil tank through the diverter-segregator valve assembly. A check-swing valve is installed in the return line between the oil cooler and tank to prevent oil from flowing back into the lower engine cylinders through the cooler and forming a hydraulic lock.

WARNING

Whenever the engine lubrication system is drained, engine sump plugs removed, or the engine is idle for more than 72 hours, the engine must be pre-oiled. See Pre-oiling in this section for proper pre-oiling procedure.

5-231. TROUBLESHOOTING.

Trouble	Cause	Remedy
Low oil pressure	Defective indicator-transmitter electrical circuit	Check pressure with direct reading gage. If OK, repair or replace defective wiring or units
	Incorrect relief valve setting	Readjust relief valve on engine to 65–75 psi
	Clogged oil pump screen	Remove and clean screen
	Cracked or dented line	Replace damaged line
	Diverter-segregator valve inoperative	Replace valve assembly
	Oil dilution valve open	Check solenoid, and its circuit. Repair or replace as necessary
	Wrong type or grade oil for climatic conditions	Consult Lubrication Chart, Section I, for proper type and grade
	Cold, heavy oil in line to transmitter	Remove line, drain and fill with light oil to give more accurate readings
	Internal engine parts failure indicated by metal particles on oil pump screen and magnetic sump plugs	Replace engine
High oil pressure	Defective indicator-transmitter electrical circuit	Check pressure with direct reading gage. If OK, replace defective wiring or units
	Incorrect relief valve setting	Readjust relief valve on engine to 65–75 psi
High oil temperature	Defective indicator-temperature bulb electrical circuit	Check temperature with direct reading gage. If OK, repair or replace defective wiring or units
	Hot running and detonating engine	Inspect for loose cowling, check engine timing and grade of fuel
	Obstruction in oil cooler duct	Remove obstruction
	Wrong type and grade oil for climatic conditions	Consult Lubrication Chart, Section I, for proper type and grade for replacement
	Diverter-segregator valve inoperative	Replace valve assembly
	Dirty oil cooler	Flush out oil cooler
	Low oil supply	Fill oil tank to proper level
	Contaminated oil	Drain system and refill with correct type and grade
	Oil cooler shutter malfunctioning	Check shutter motor thermostat, thermostat floating contact arms and wiring for faulty operation and loose connections. Repair or replace defective wiring or units

Trouble	Cause	Remedy
Low oil temperature	Defective indicator-temperature bulb electrical circuit	Check temperature with a direct reading gage. If OK, repair or replace defective wiring or units
	Diverter-segregator valve inoperative	Replace valve assembly
	Oil cooler shutter malfunctioning	Check shutter motor, thermostat, thermostat floating contact arms and wiring for faulty operation and loose connections. Repair or replace defective wiring or units
No oil pressure or loss of oil pressure	Defective pressure indicator-transmitter electrical circuit	Check pressure with a direct reading gage. If OK, repair or replace defective wiring or units
	Cold, heavy oil in line to transmitter	Remove line, drain and fill with light oil to give more accurate readings
	Clogged or broken oil pressure line	Replace damaged line
	Empty oil tank	Fill tank
	Pressure relief valve not adjusted	Adjust pressure relief valve
	Ruptured oil cooler	Replace oil cooler. Inspect check-swing valve for possible reversed installation; remove and reinstall in correct position
	Defective main oil pump or scavenge pump	Replace pump
	Defective diverter-segregator valve assembly	Replace valve

5-232. OIL TANK.

5-233. DESCRIPTION. (See figure 5-31.) The oil tank used on the YH-21 and H-21A helicopters is a corrosion-resistant, non-self-sealing, steel tank. The oil tank is divided into two sections, the main oil supply section and the hopper section. A diverter-segregator valve assembly, mounted on the oil tank sump controls engine oil flow through the two sections.

The oil tank of the H-21B and H-21C helicopters is a self-sealing tank mounted by straps to the right side of the fuselage in the engine compartment. The self-sealing oil tank is divided in the same manner as the YH-21 and H-21A tank, with flow control being governed by the diverter-segregator valve assembly. The usable oil capacity for either the YH-21 and H-21A tank or the H-21B and H-21C tank is as follows:

	Capacity in Gallons	
TANK	17.47 US	14.56 Imperial
HOPPER	4.00 US	3.33 Imperial
Total Tank Capacity	21.47 US	17.89 Imperial
Less Residual Oil	2.27 US	1.89 Imperial
Usable Oil Capacity	19.20 US	16.00 Imperial

The oil filler neck is accessible from outside the helicopter on the right side of the fuselage. An oil quantity dipstick is located behind a hinged door to the left of the filler neck door on YH-21 and H-21A helicopters. The H-21B and H-21C helicopters have the dipstick inside the filler neck of the oil tank. Refer to Engine Oil System Service, Section I for instructions in servicing the oil tank.

5-234. REMOVAL. (See figure 5-31.) To remove the oil tank between engine changes, proceed as follows:

a. Drain the system through the Y-drain valve (20) at the engine mount bulkhead.

b. Drain the tank sump through the valve (15) in the bottom of the tank.

c. Disconnect vapor return lines (10 and 12), oil supply lines (17 and 18), the oil dilution line, and scupper drain line.

d. Remove the scupper anchoring screws, loosen the strap assemblies, and lift the tank from the engine compartment.

5-235. INSTALLATION. To install the oil tank, reverse the removal procedure. All threaded fittings on the oil tank must be lubricated with antiseize compound, Spec JAN-A-669. Avoid the use of excess compound in order to prevent plugging or malfunctioning of lines or valves. Tighten the clamps on YH-21 and H-21A helicopter oil tank straps until straps are tight and snug around tank. Tighten the turnbuckles on H-21B and H-21C helicopter oil tank straps to 10 ±2 pound-inches torque. Lockwire all turnbuckles and all drains. Fill the system with new oil as specified by the Lubrication Chart, Section I. Start the engine and check for leaks.

WARNING

Whenever the engine lubrication system is drained, engine sump plugs removed, or the engine is idle for more than 72 hours, the engine must be pre-oiled. See Pre-Oiling in this section for proper pre-oiling procedure.

5-236. ENGINE OIL COOLER.

5-237. DESCRIPTION. (See figure 5-31.) The engine oil cooler (24) is composed of a series of flat tubes through which the oil flows. Cooling air from the engine fan circulates around the tubes and dissipates the heat. An oil bypass tube, built into the cooler, permits oil to bypass the cooling tubes if oil already in the tubes is congealed. Oil